FORM PC 176

PARTS CATALOG

FOR MODELS

J12 & J13 JR12 & JR13

CARRYALL SCRAPER

EFECTIVE WITH SERIAL NUMBER

247J12 & UP
447J13 & UP
856JR12 & UP
791JR13 & UP

2066 J12

HEAVY-GRADING EQUIPMENT
LeTOURNEAU
WELDED TOGETHER

ALWAYS GIVE MACHINE NUMBER WHEN ORDERING PARTS

Peoria, Ill. • **R. G. LeTOURNEAU, Inc.** • *Stockton, Calif.*

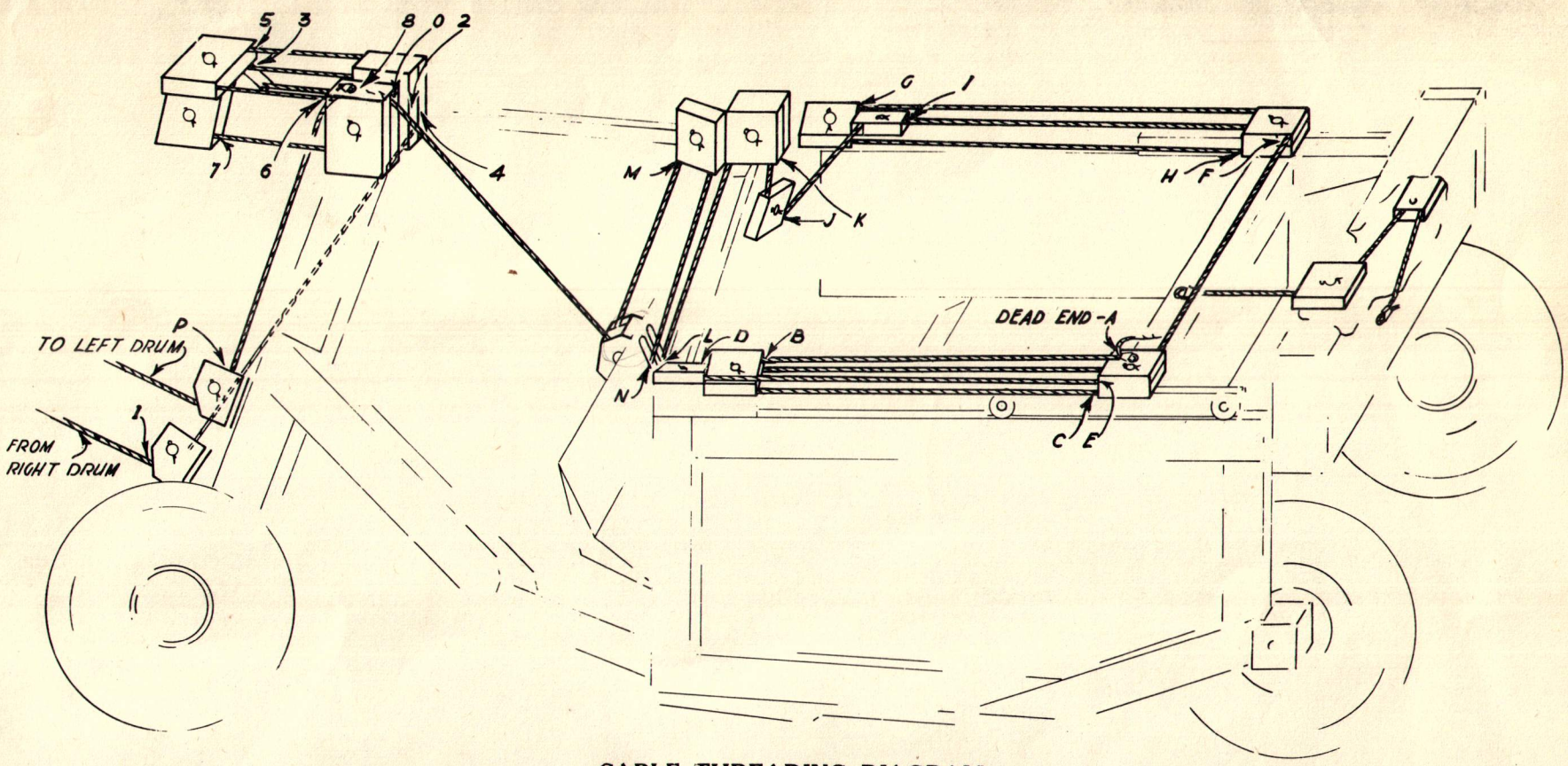

CABLE THREADING DIAGRAM

TAIL GATE AND FRONT APRON CABLE: 140 FEET OF ½" DIAM. 6 x 19, WIRE ROPE CENTER

From cable spool mounted on rear of Tail Gate, pass end of cable forward through cable guide on Roller Beam and thence around lower left "A" Frame Sheave ..... "B"
Back and around bottom left Tail Gate Sheave ..... "C"
Forward and around lower left "A" Frame Sheave ..... "D"
Back and around top left Tail Gate Sheave ..... "E"
Across top of Tail Gate to top right Tail Gate Sheave ..... "F"
Forward and around lower right "A" Frame Sheave ..... "G"
Back and around bottom right Tail Gate Sheave ..... "H"
Forward and around lower right "A" Frame Sheave ..... "I"
Up and around center "A" Frame Sheave ..... "J"
Up and around upper "A" Frame Sheave ..... "K"
Down and around right Apron Sheave ..... "L"
Up and around upper front "A" Frame Sheave ..... "M"
Down and around left Apron Sheave ..... "N"
Up and over inside left Cantilever Yoke Sheave ..... "O"
Down and around upper Swivel Sheave ..... "P"
Then forward to left drum of POWER CONTROL UNIT. Then dead-end the cable by looping and passing through the large cable anchor on top of Tail Gate Sheave Housing ..... "A"
Then insert cable wedge in loop and draw taut.

HOIST CABLE: 65 FEET OF ½" DIAM. 6 x 19, WIRE ROPE CENTER

From right drum of POWER CONTROL UNIT, pass end of cable down and around lower Swivel Sheave ..... "1"
Up and around inside right Cantilever Yoke Sheave ..... "2"
Forward and around right Pushbeam Sheave ..... "3"
Back and around outside right Cantilever Yoke Sheave ..... "4"
Forward and around top Pushbeam Sheave ..... "5"
Back and around outside left Cantilever Yoke Sheave ..... "6"
Forward and around left Pushbeam Sheave ..... "7"
Then back to dead-end in cable anchor on top of Yoke Sheave Housing ..... "8"
(Rights and Lefts are determined by standing behind and looking forward)

CABLE THREADING DIAGRAM

EFFECTIVE WITH SERIAL NO. 247J12 to 594J12, 447J13 to 592J13, 2001J12 to 2371J12

ALWAYS GIVE MACHINE NUMBER WHEN ORDERING PARTS

PRINTED IN U.S.A.

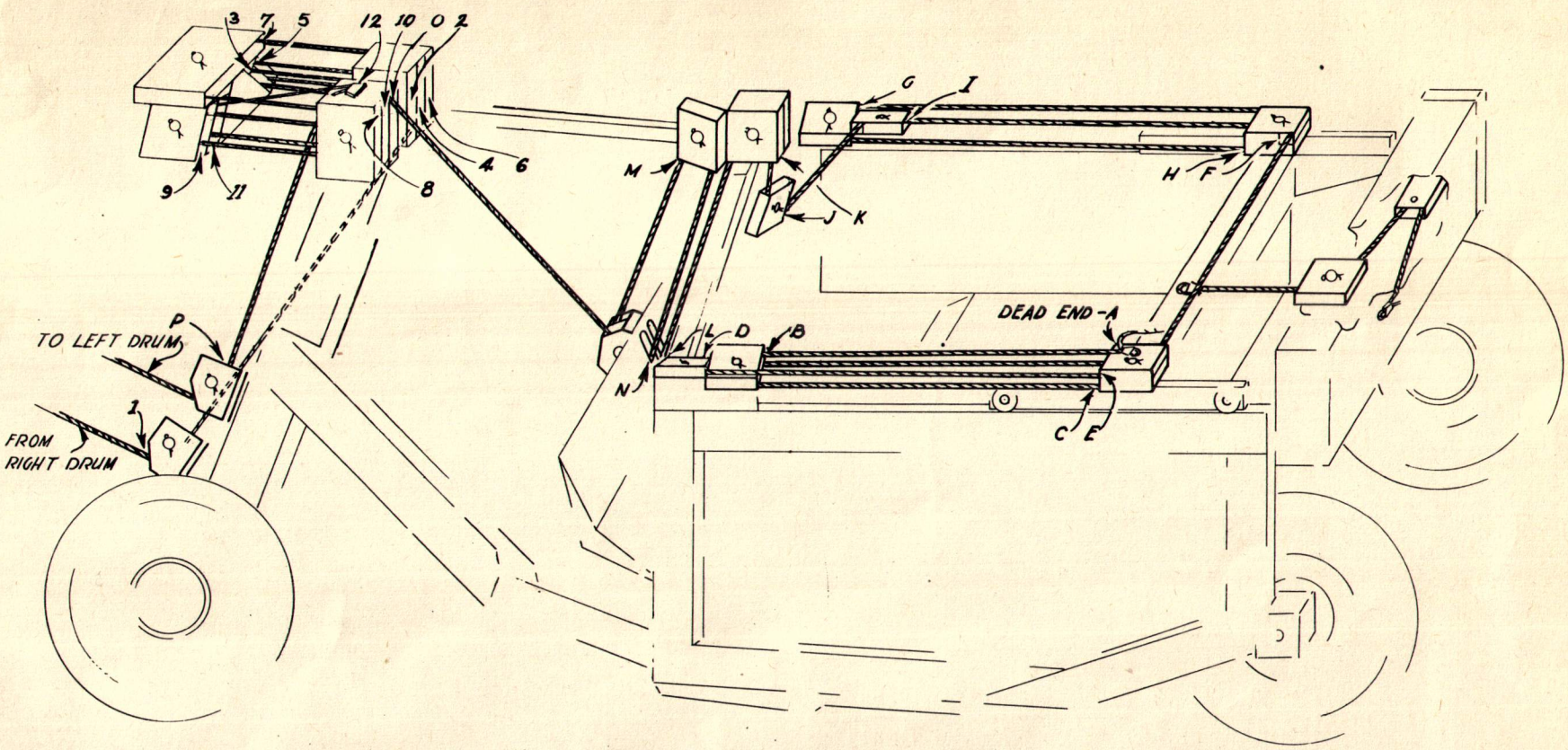

CABLE THREADING DIAGRAM

HOIST CABLE: 100 FEET OF ½" DIAM., WIRE ROPE CENTER

From right drum of POWER CONTROL UNIT, pass end of cable down and around lower Swivel Sheave	"1"
Up and around inside right Cantilever Yoke Sheave	"2"
Forward and around inside right Pushbeam Sheave	"3"
Back and around center right Cantilever Yoke Sheave	"4"
Forward and around outside right Pushbeam Sheave	"5"
Back and around outside right Cantilever Yoke Sheave	"6"
Forward and around top Pushbeam Sheave	"7"
Back and around outside left Cantilever Yoke Sheave	"8"
Forward and around outside left Pushbeam Sheave	"9"
Back and around center left Cantilever Yoke Sheave	"10"
Forward and around inside left Pushbeam Sheave	"11"
Back to dead end in cable anchor on top of left of Cantilever Yoke Sheave Housing	"12"

(Right and left determined by standing behind and looking forward.)

TAILGATE AND FRONT APRON CABLE; 140 FEET OF ½" DIAM. 6 x 19, WIRE ROPE CENTER

From cable spool mounted on rear of Tail Gate, pass end of cable forward through cable guide on Roller Beam and thence around lower left "A" Frame Sheave	"B"
Back and around bottom left Tail Gate Sheave	"C"
Forward and around lower left "A" Frame Sheave	"D"
Back and around top left Tail Gate Sheave	"E"
Across top of Tail Gate to top right Tail Gate Sheave	"F"
Forward and around lower right "A" Frame Sheave	"G"
Back and around bottom right Tail Gate Sheave	"H"
Forward and around lower right "A" Frame Sheave	"I"
Up and around center "A" Frame Sheave	"J"
Up and around upper "A" Frame Sheave	"K"
Down and around right Apron Sheave	"L"
Up and around upper front "A" Frame Sheave	"M"
Down and around left Apron Sheave	"N"
Up and over inside left Cantilever Yoke Sheave	"O"
Down and around upper Swivel Sheave	"P"

Forward to left drum of POWER CONTROL UNIT.

Dead end cable Spool End, by looping and passing through the large cable anchor on top of Tail Gate Sheave Housing "A"

Then insert cable wedge in loop and draw taut.

CABLE THREADING DIAGRAM

EFFECTIVE WITH SERIAL NO. 505J12 TO 1999J12, 593J13 TO 1999J13, 2544J12 & UP

EFFECTIVE WITH SERIAL NO. 2372J12 to 2543J12 Incl.

ALWAYS GIVE MACHINE NUMBER WHEN ORDERING PARTS

PRINTED IN U.S.A.

J12 & J13 CARRYALL SCRAPER

BODY

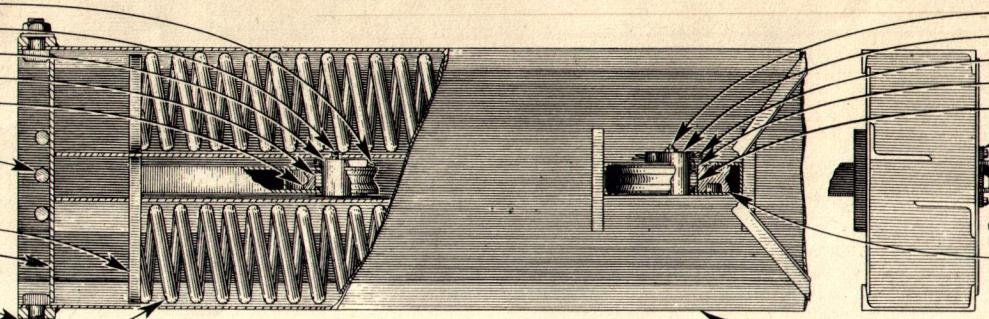

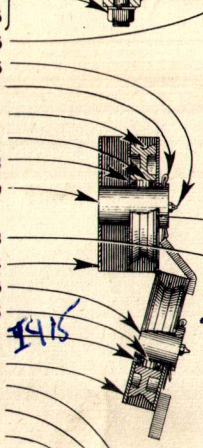

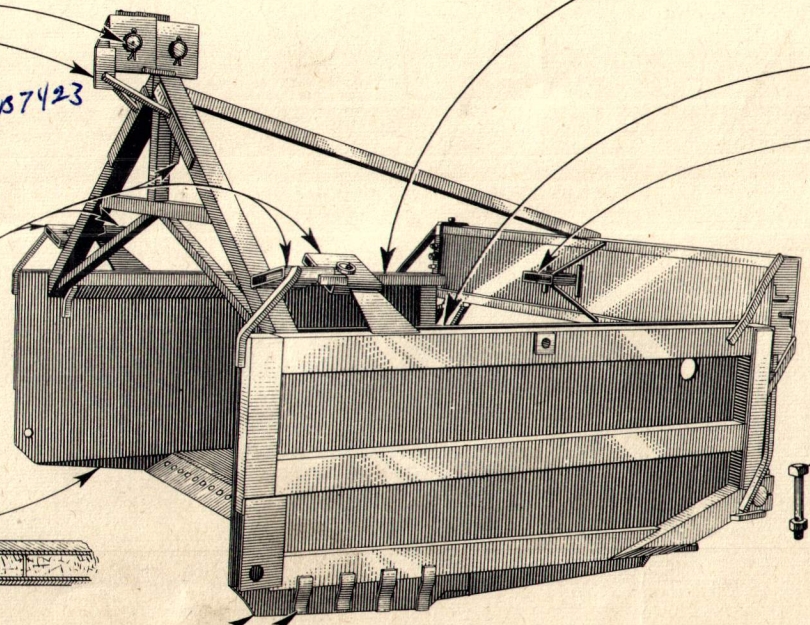

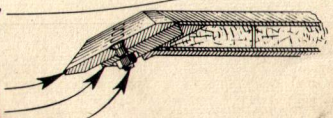

1 COTTER KEY-----D-1032
1 ZERK FITTING----D-1033
1 SHEAVE PIN------D-1031
1 BEARING---------C-175
1 SHEAVE----------C-1962
3 BOLT----------C-1583
3 NUT----------C-1531
3 LOCKWASHER------C-1544

1 PULL PLATE-----E-8847
1 COVER PLATE-----C-6133
2 BOLT----------C-7639
2 NUT----------C-1533
2 LOCKWASHER-----C-1545
12 SPRING----------C-1915
3 ZERK FITTING-----C-315
1 COTTER KEY------C-1051
2 SHEAVE----------C-137
1 BEARING---------C-175
2 DUST SEAL--------L-323
1 SHEAVE PIN------C-420

1 APRON STOP-----D-1043
1 HOUSING--------C-8574
1 SHEAVE PIN-------C-138
1 BEARING---------C-175
2 DUST SEAL-------L-323
1 HOUSING---------C-8573
5 ZERK FITTING------C-315
5 SHEAVE PIN-------C-174
5 COTTER KEY-----C-1051
5 BEARING---------C-175
5 SHEAVE---------C-172
5 HOUSING---------C-8570

1 RIGHT
GROUND PLATE----C-6117

1 BLADE----------C-5420
1 BLADE BASE------C-615
30 BLADE BOLT----C-1732
1 GROUND PLATE---E-9264
8 PLATE STRAP----E-5666

C-315 ZERK FITTING------1
C-138 SHEAVE PIN-------1
C-1051 COTTER KEY-------1
L-323 DUST SEAL---------2
C-175 BEARING----------1
C-7611 COVER PLATE------1
C-504 CABLE SOCKET------1
C-1600 CAPSCREW--------2
C-445 CABLE WEDGE-----1

C-137 SHEAVE----------1

D-1044 SPRING BEAM-----1

TAILGATE RAIL RIGHT
D-1123 FOR J12 & JR12--- 1
D-1140 FOR J13 & JR13--- 1

TAILGATE RAIL LEFT
D-1124 FOR J12 & JR12-- 1
D-1141 FOR J13 & JR13--- 1

D-1042 HOUSING---------1

C-523 REAR HITCH PIN--1

C-1592 BOLT----------4
C-1533 NUT----------4

D 304
787423
1415

250

ALWAYS GIVE MACHINE NUMBER WHEN ORDERING PARTS

PRINTED IN U.S.A.

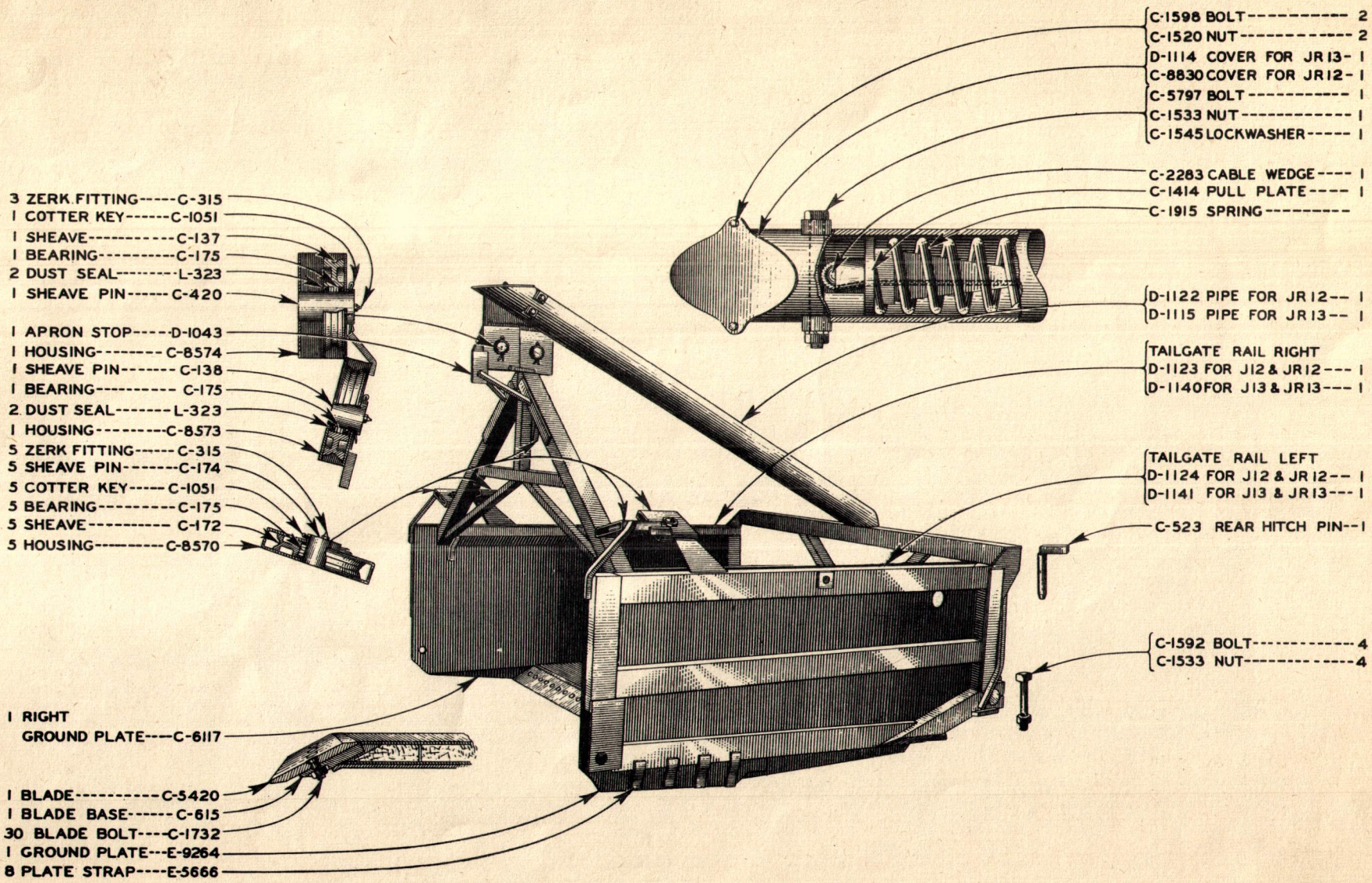

BODY

ALWAYS GIVE MACHINE NUMBER WHEN ORDERING PARTS

PRINTED IN U.S.A.

TAILGATE

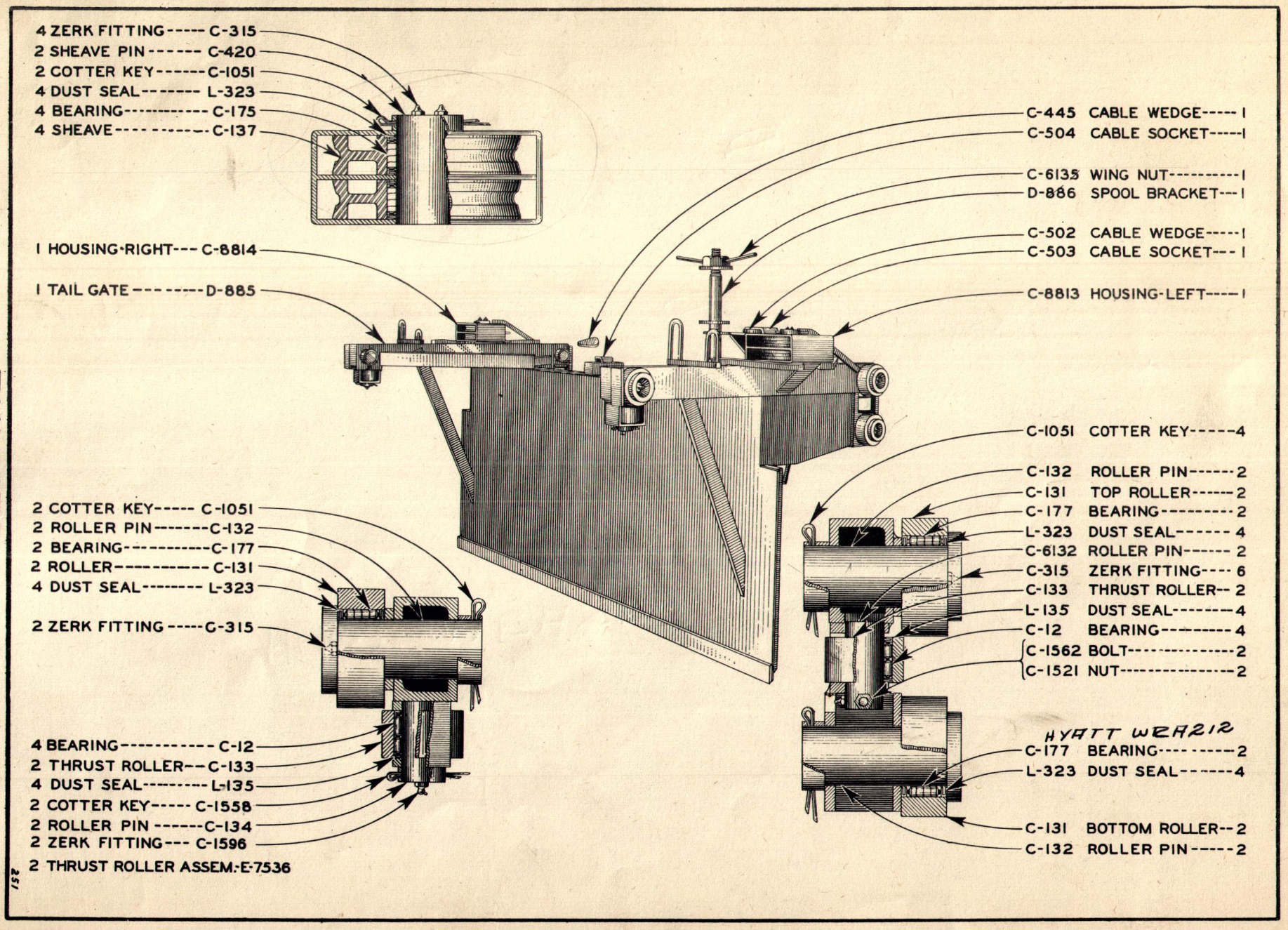

PRINTED IN U.S.A.

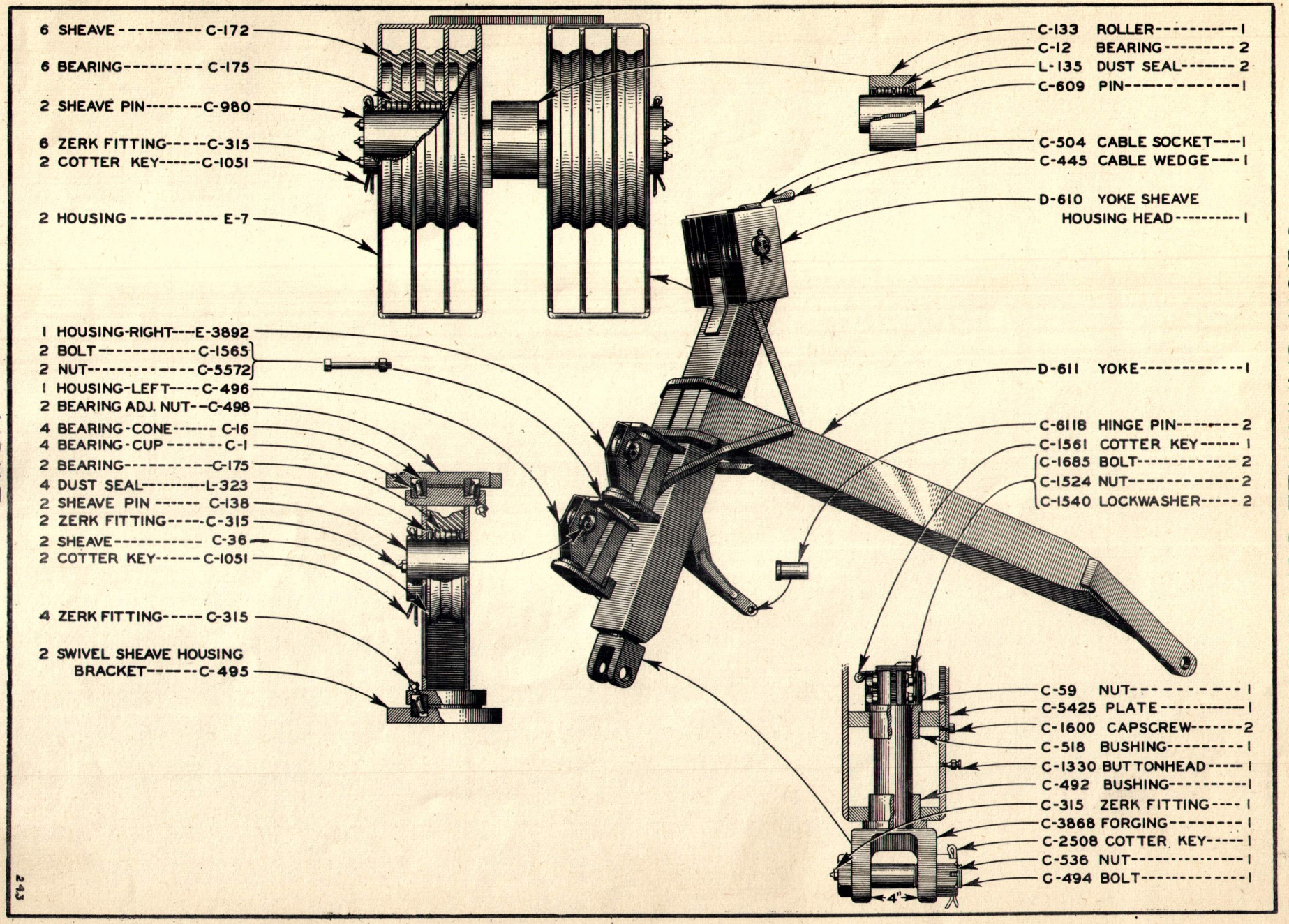

YOKE

EFFECTIVE WITH SERIAL NO. 2328J12 to 2371J12, also 2147J12

ALWAYS GIVE MACHINE NUMBER WHEN ORDERING PARTS

PRINTED IN U.S.A.

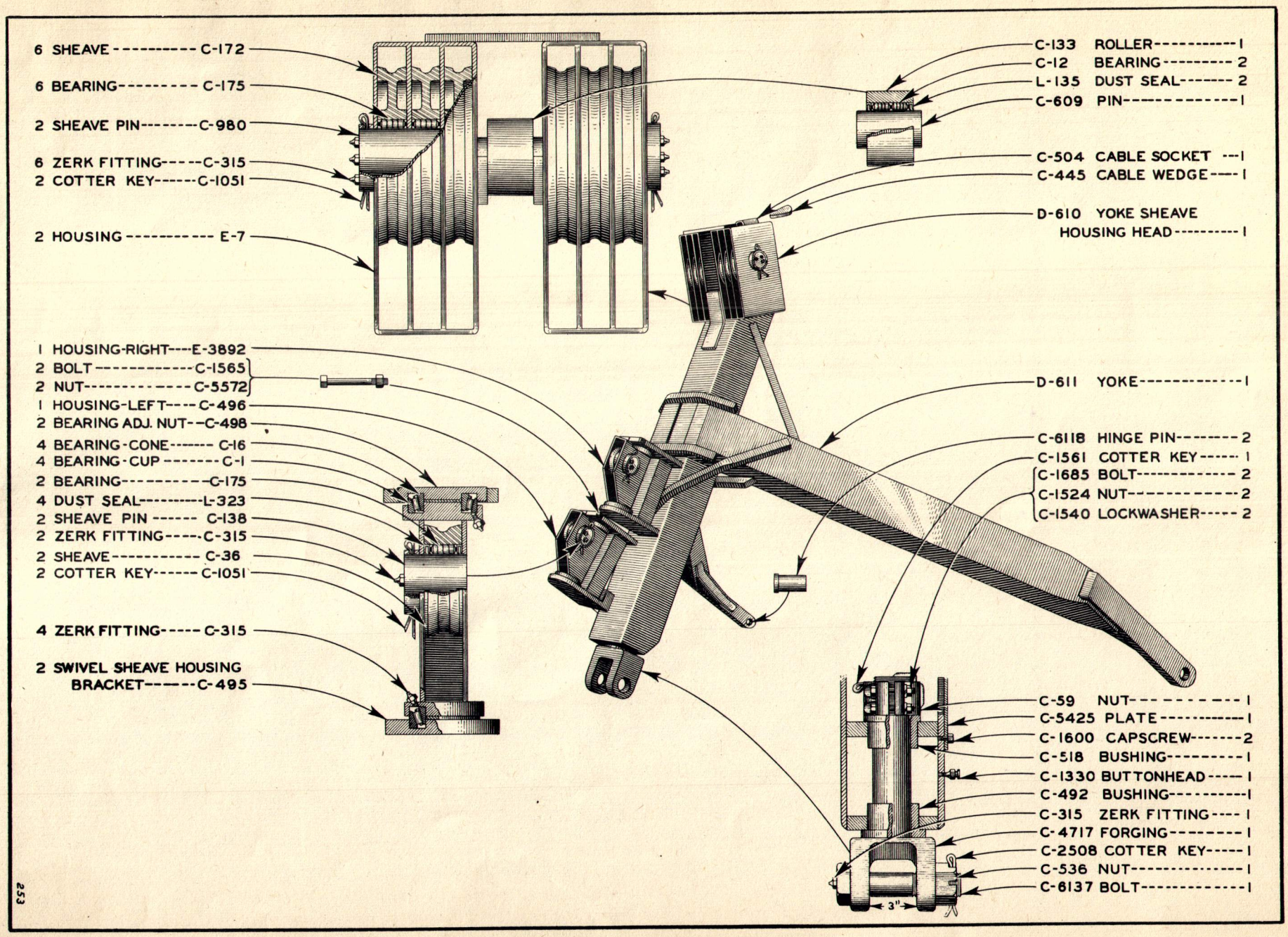

YOKE

EFFECTIVE WITH SERIAL NO. 595J12 to 621J12, 593J13 to 626J13, 2208J12 to 2371J12

ALWAYS GIVE MACHINE NUMBER WHEN ORDERING PARTS

PRINTED IN U.S.A.

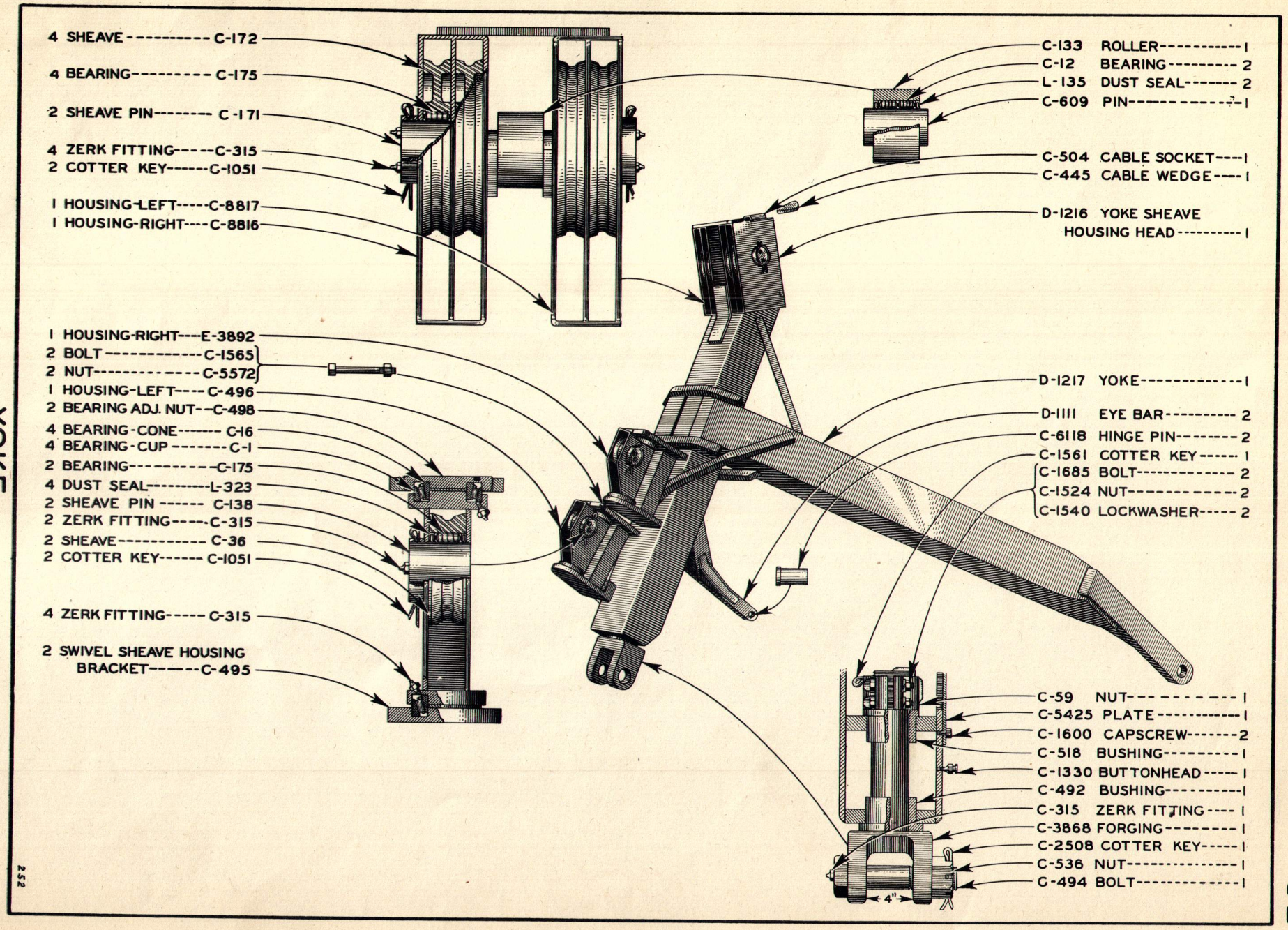

YOKE

EFFECTIVE WITH SERIAL NO. 2328J12 to 2371J12, also 2147J12

ALWAYS GIVE MACHINE NUMBER WHEN ORDERING PARTS

PRINTED IN U.S.A.

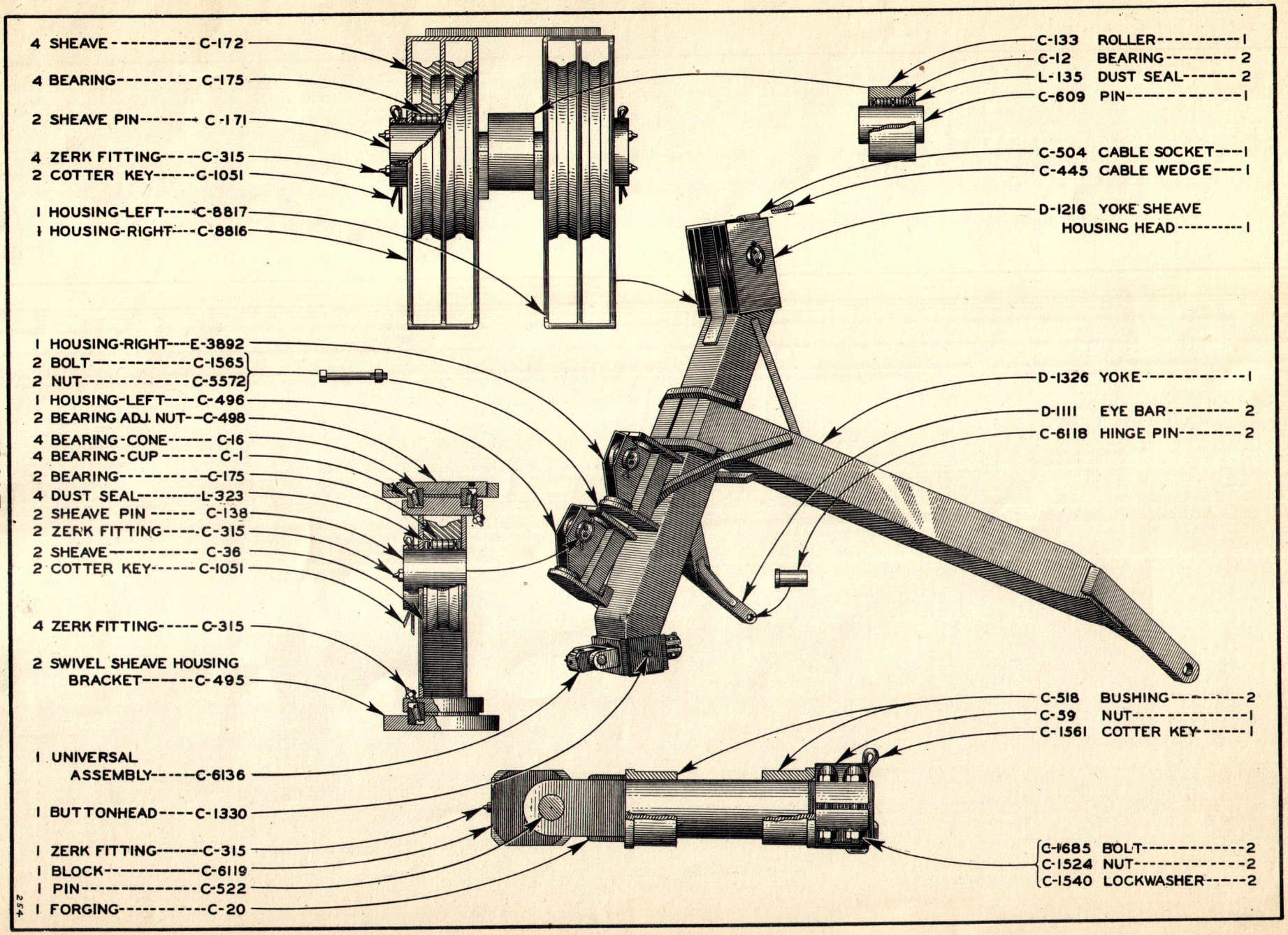

YOKE

EFFECTIVE WITH SERIAL NO. 247J12 to 551J12, 447J13 to 448J13, 2001J12 to 2203J12

ALWAYS GIVE MACHINE NUMBER WHEN ORDERING PARTS

PRINTED IN U.S.

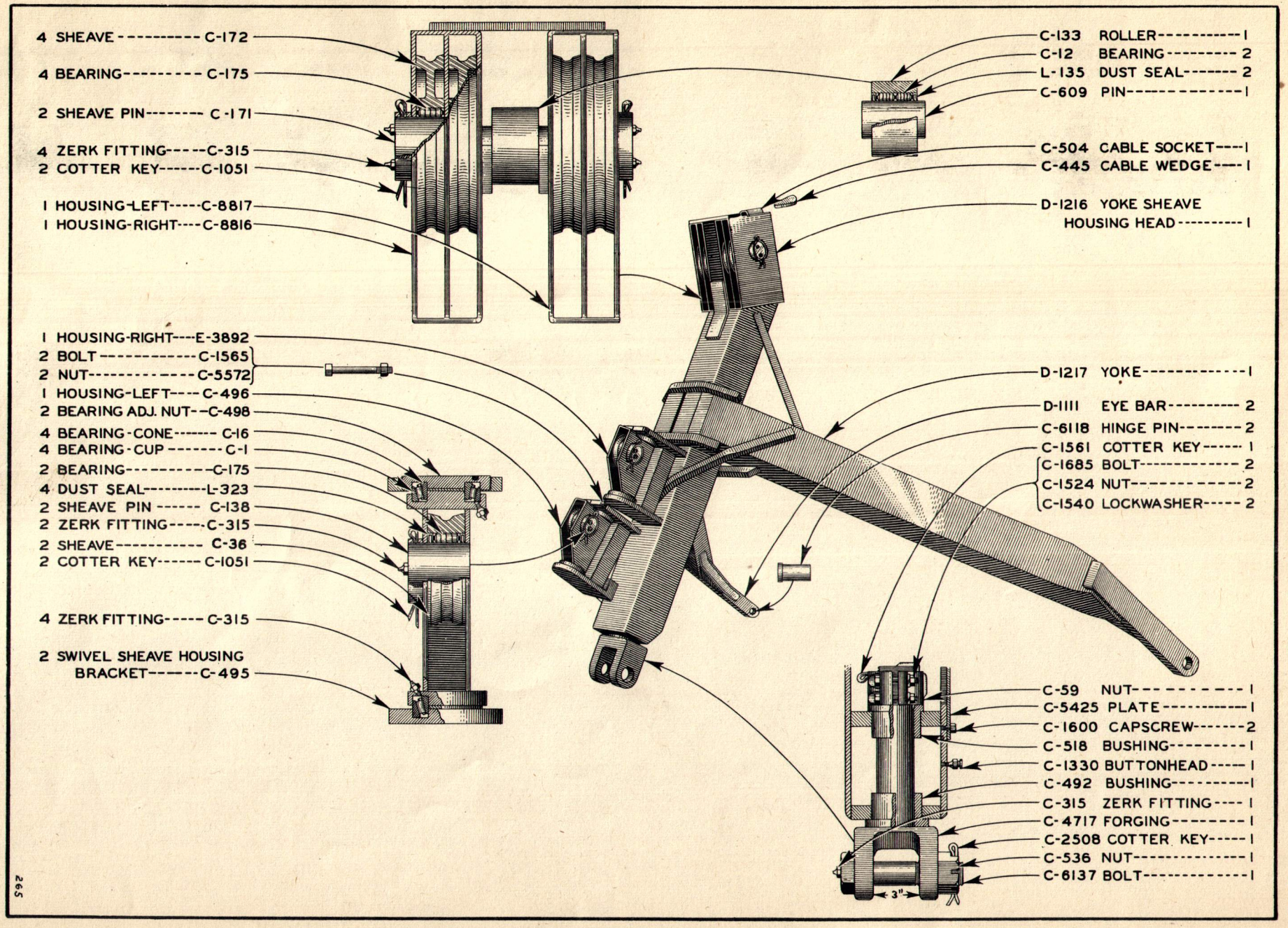

YOKE

EFFECTIVE WITH SERIAL NO. 552J12 to 594J12, 568J13 to 592J13, 2205J12 to 2327J12

ALWAYS GIVE MACHINE NUMBER WHEN ORDERING PARTS

PRINTED IN U.S.A.

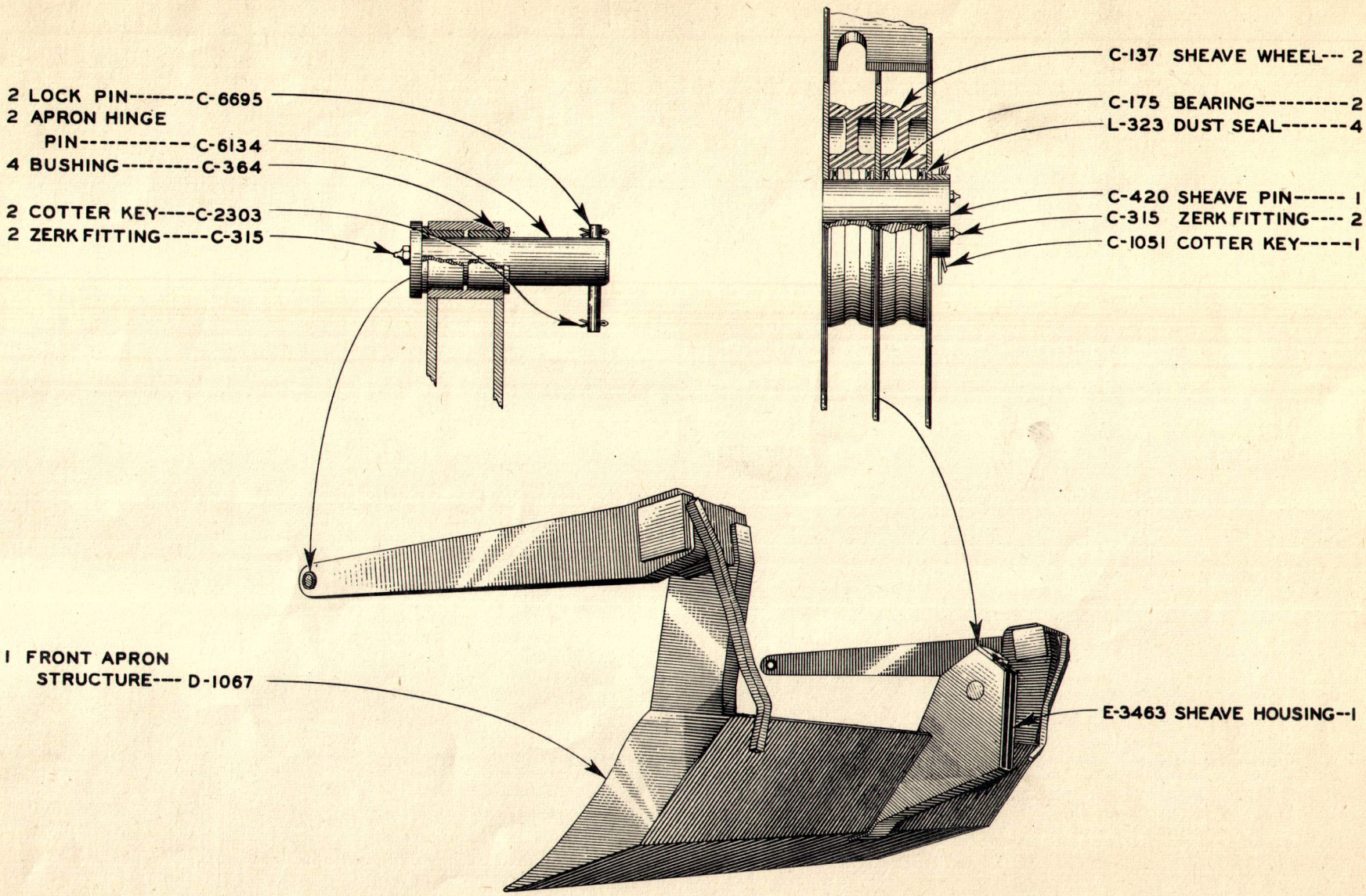

FRONT APRON

258

PRINTED IN U.S.A.

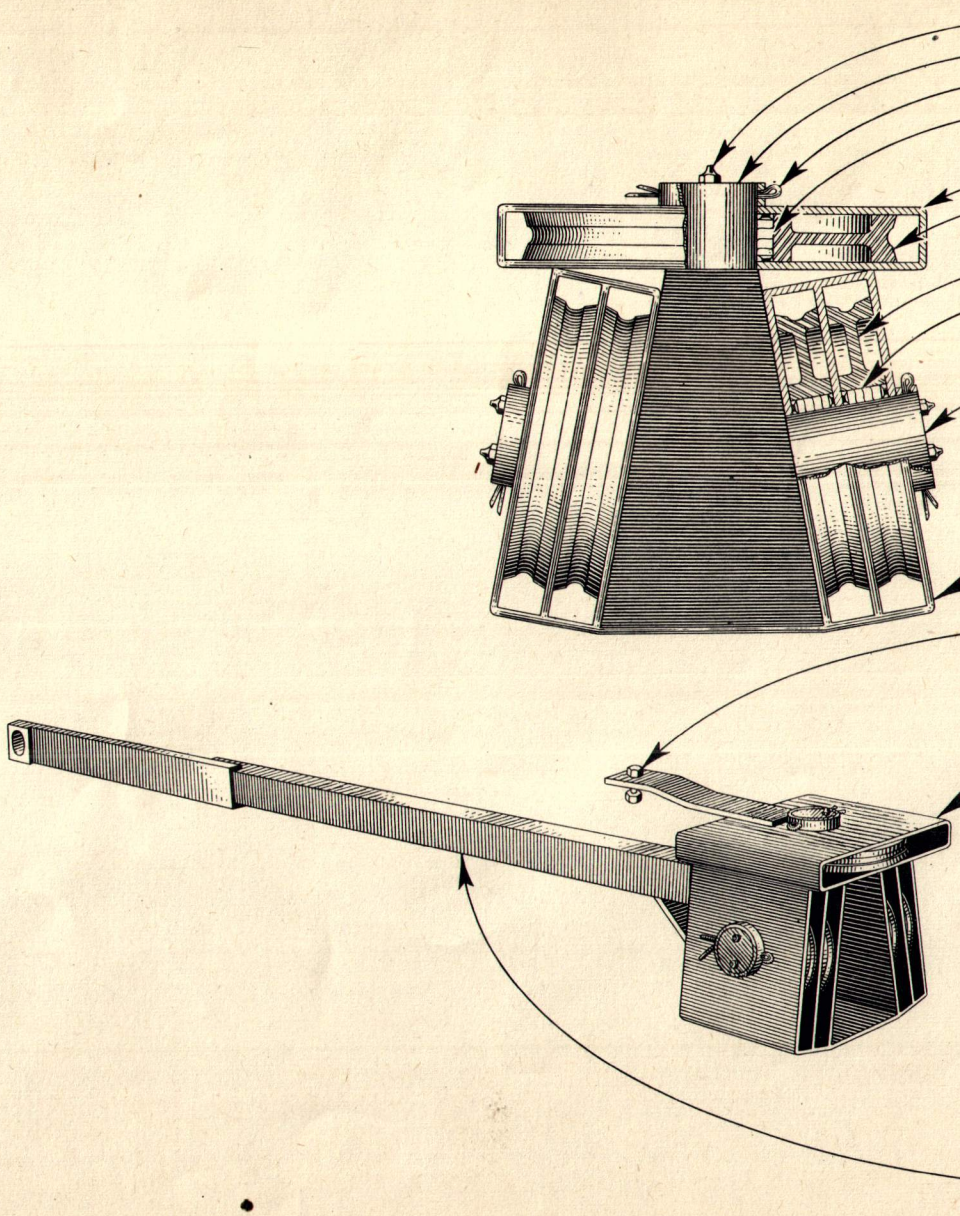

PUSHBEAM

EFFECTIVE WITH SERIAL NO. 505J12 TO 1999J12, 593J13 TO 1999J13, 2544J12 & UP

ALWAYS GIVE MACHINE NUMBER WHEN ORDERING PARTS

261

PRINTED IN U.S.A.

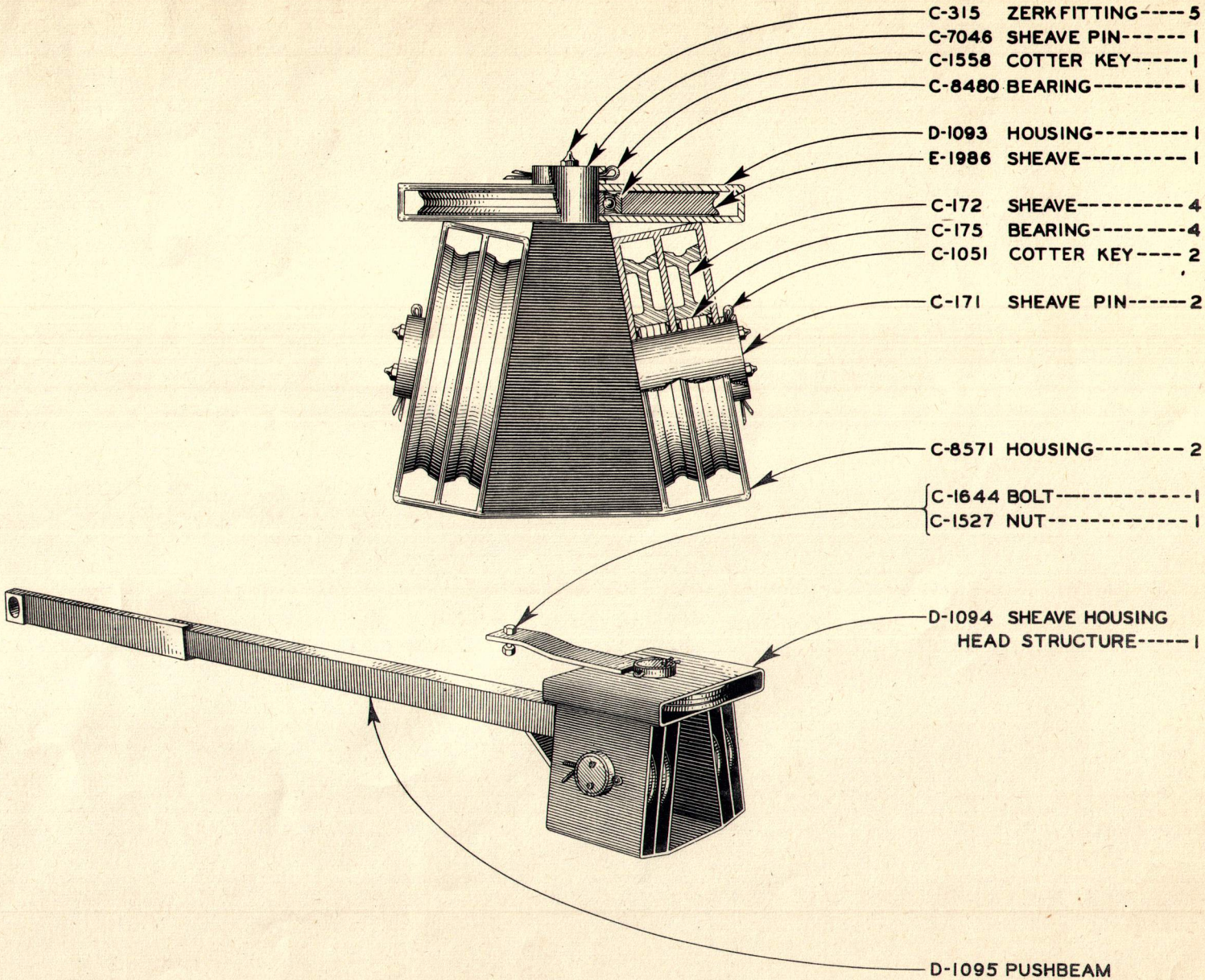

PUSHBEAM

EFFECTIVE WITH SERIAL NO. 2372J12 to 2543J12 Incl.

ALWAYS GIVE MACHINE NUMBER WHEN ORDERING PARTS

PRINTED IN U.S.A.

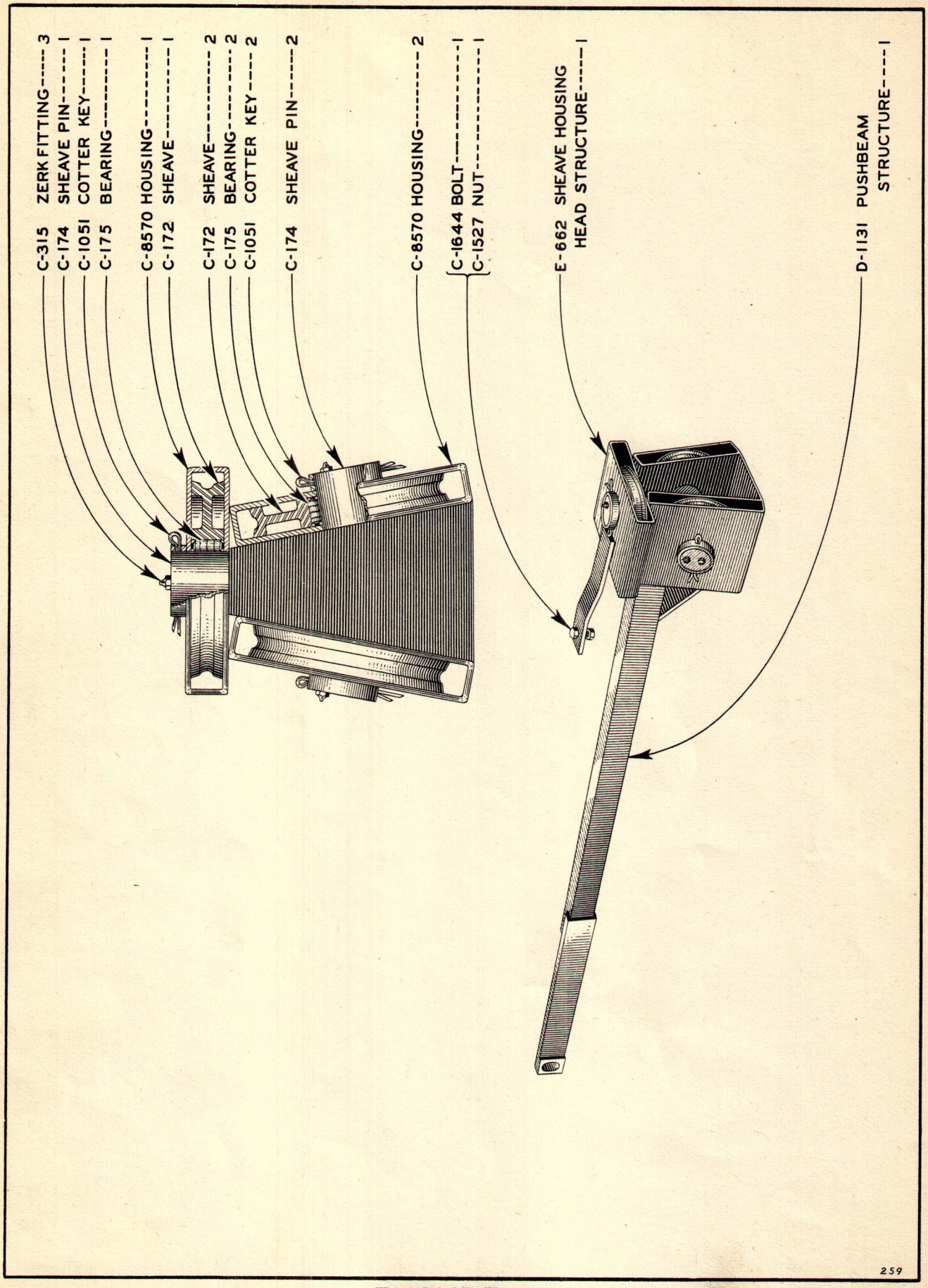

PUSHBEAM

EFFECTIVE WITH SERIAL NO. 247J12 to 594J12, 447J13 to 592J13, 2001J12 to 2371J12

ALWAYS GIVE MACHINE NUMBER WHEN ORDERING PARTS

PRINTED IN U.S.A.

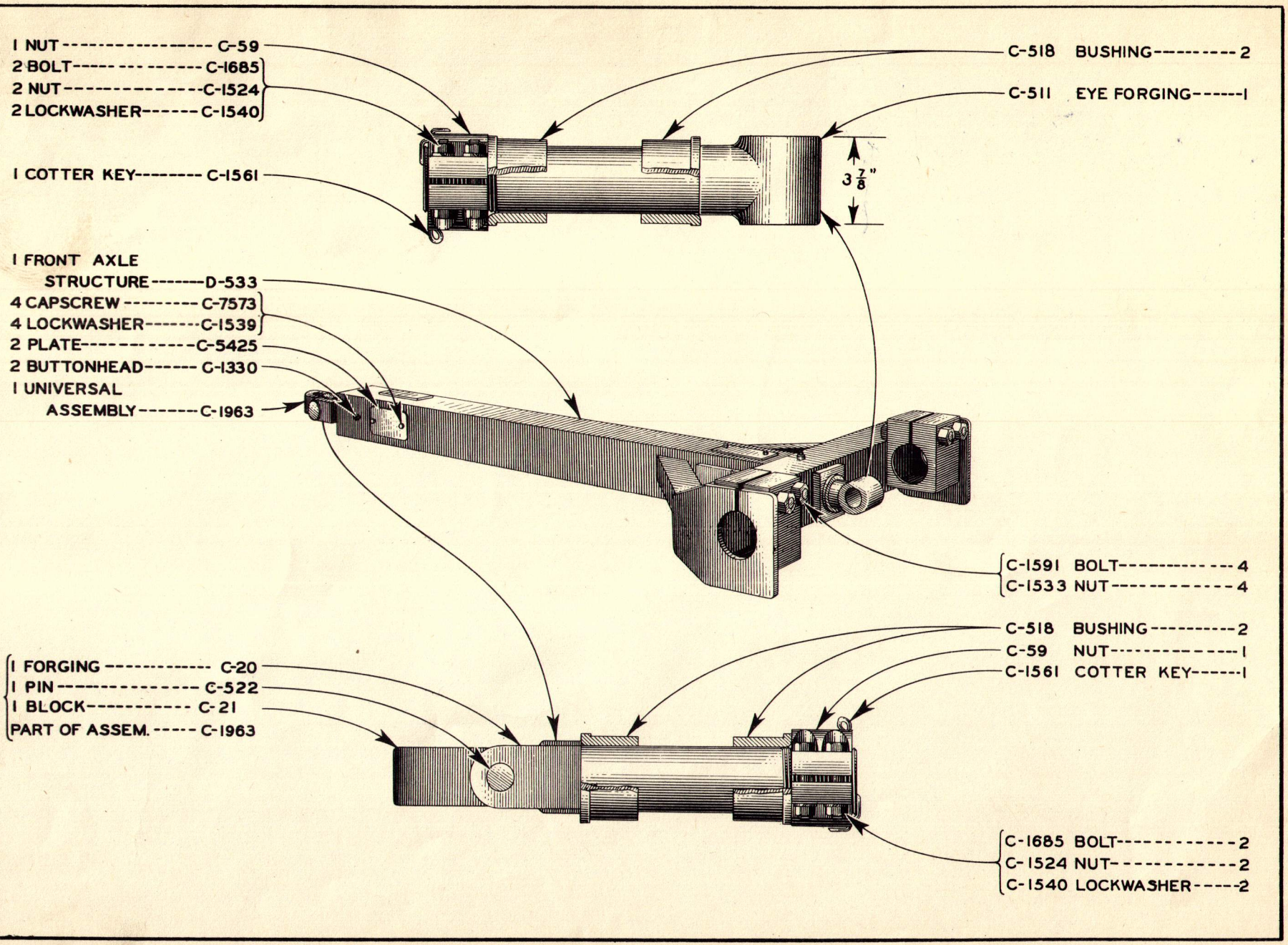

FRONT AXLE TONGUE

EFFECTIVE WITH SERIAL NO. 622J12 and Up, 627J13 and Up, 2372J12 and Up

ALWAYS GIVE MACHINE NUMBER WHEN ORDERING PARTS

PRINTED IN U.S.A.

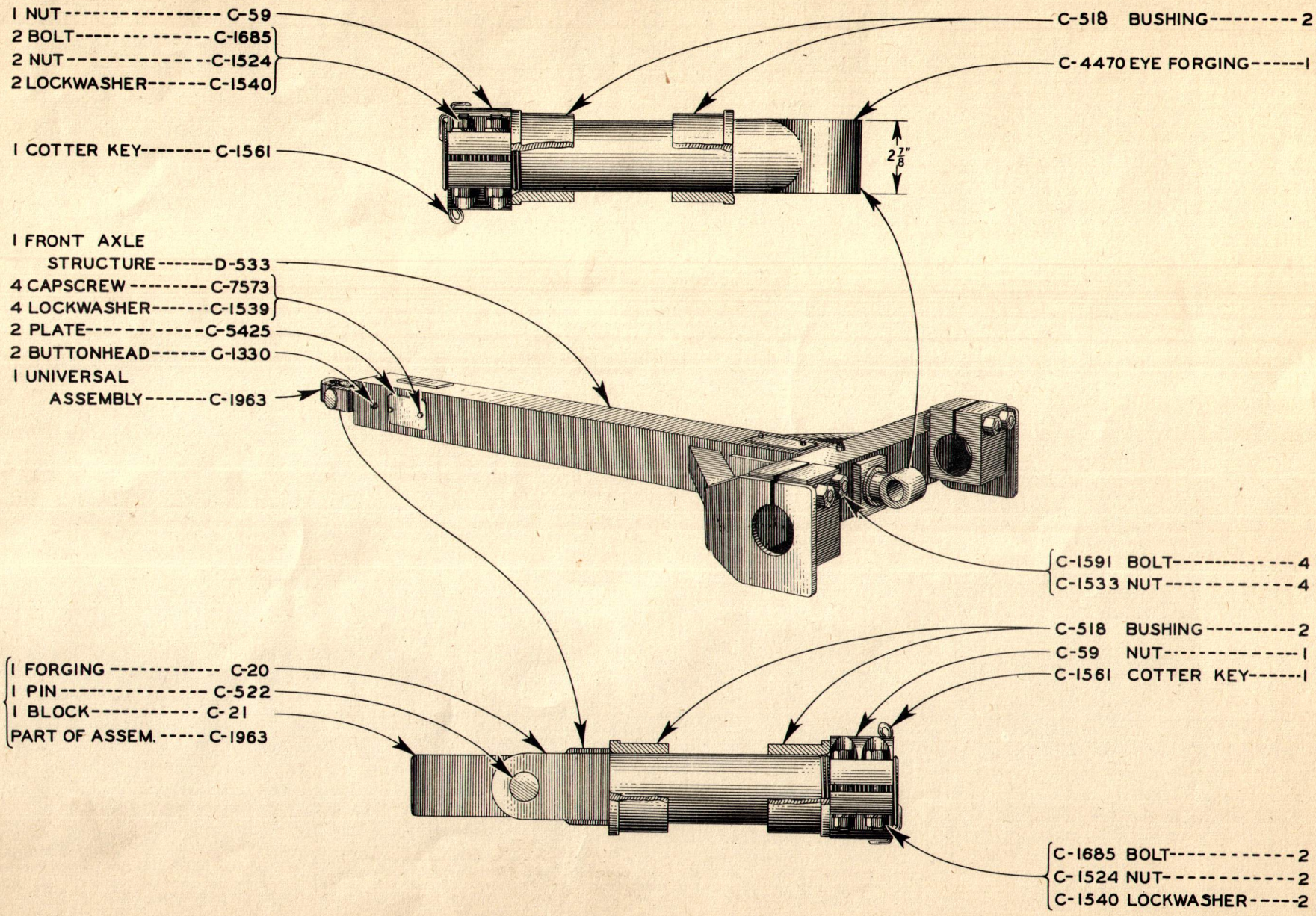

FRONT AXLE TONGUE

EFFECTIVE WITH SERIAL NO. 552J12 to 621J12, 568J13 to 626J13, 2205J12 to 2327J12

ALWAYS GIVE MACHINE NUMBER WHEN ORDERING PARTS

PRINTED IN U.S.A.

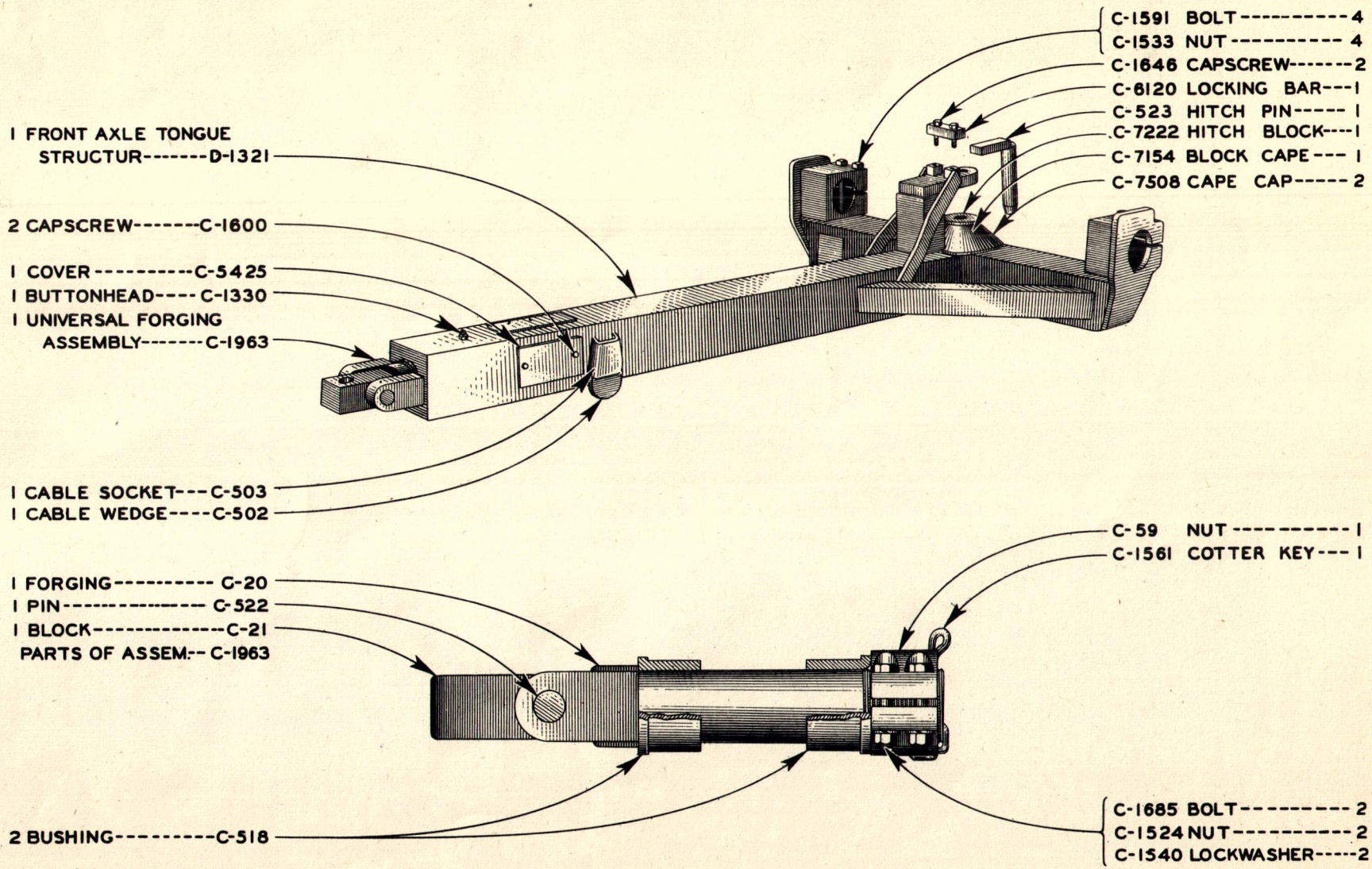

FRONT AXLE TONGUE

EFFECTIVE WITH SERIAL NO. 247J12 to 551J12, 447J13 to 448J13, 2001J12 to 2203J12

ALWAYS GIVE MACHINE NUMBER WHEN ORDERING PARTS

PRINTED IN U.S.A.

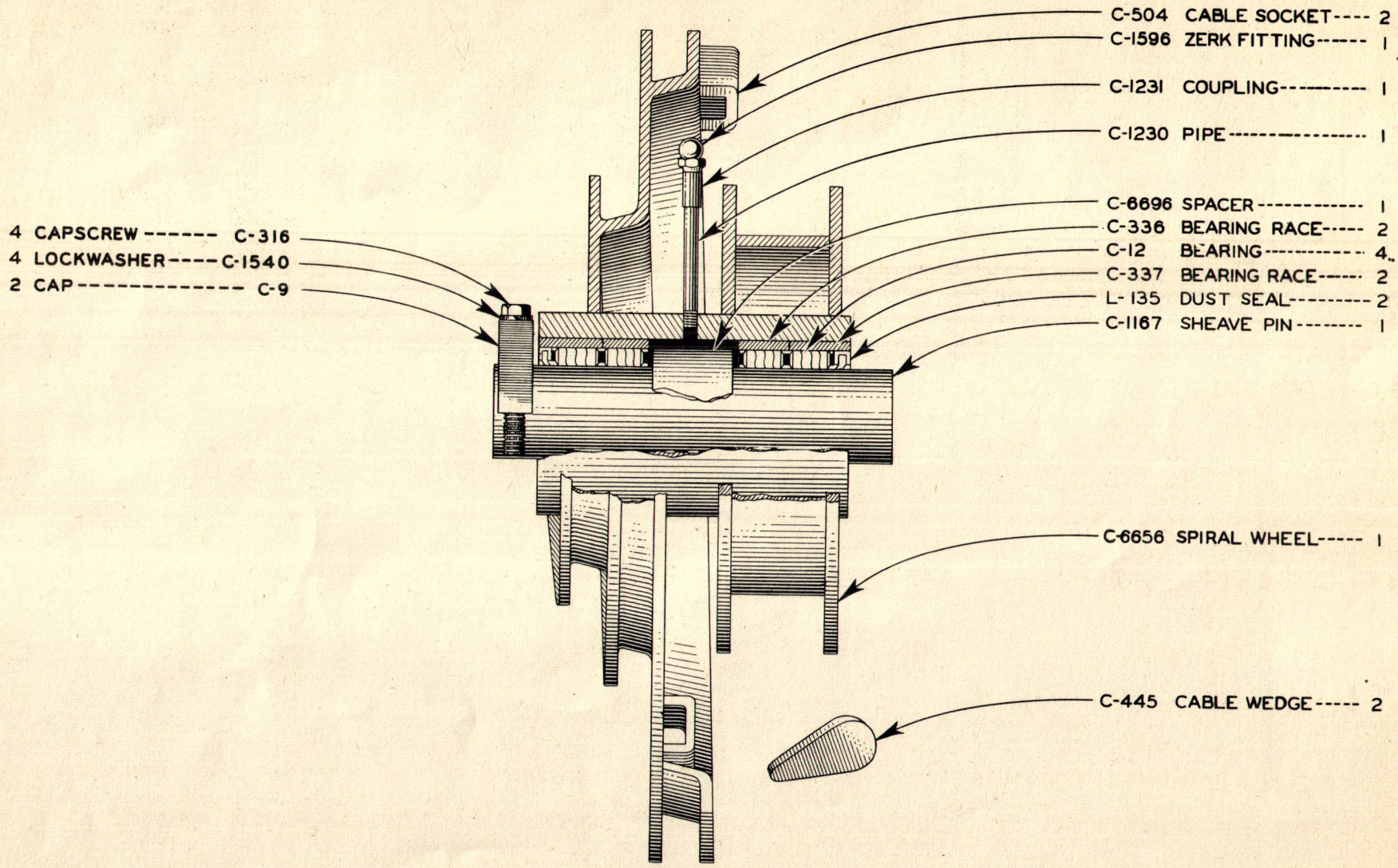

SPIRAL SHEAVE

266

PRINTED IN U.S.A.

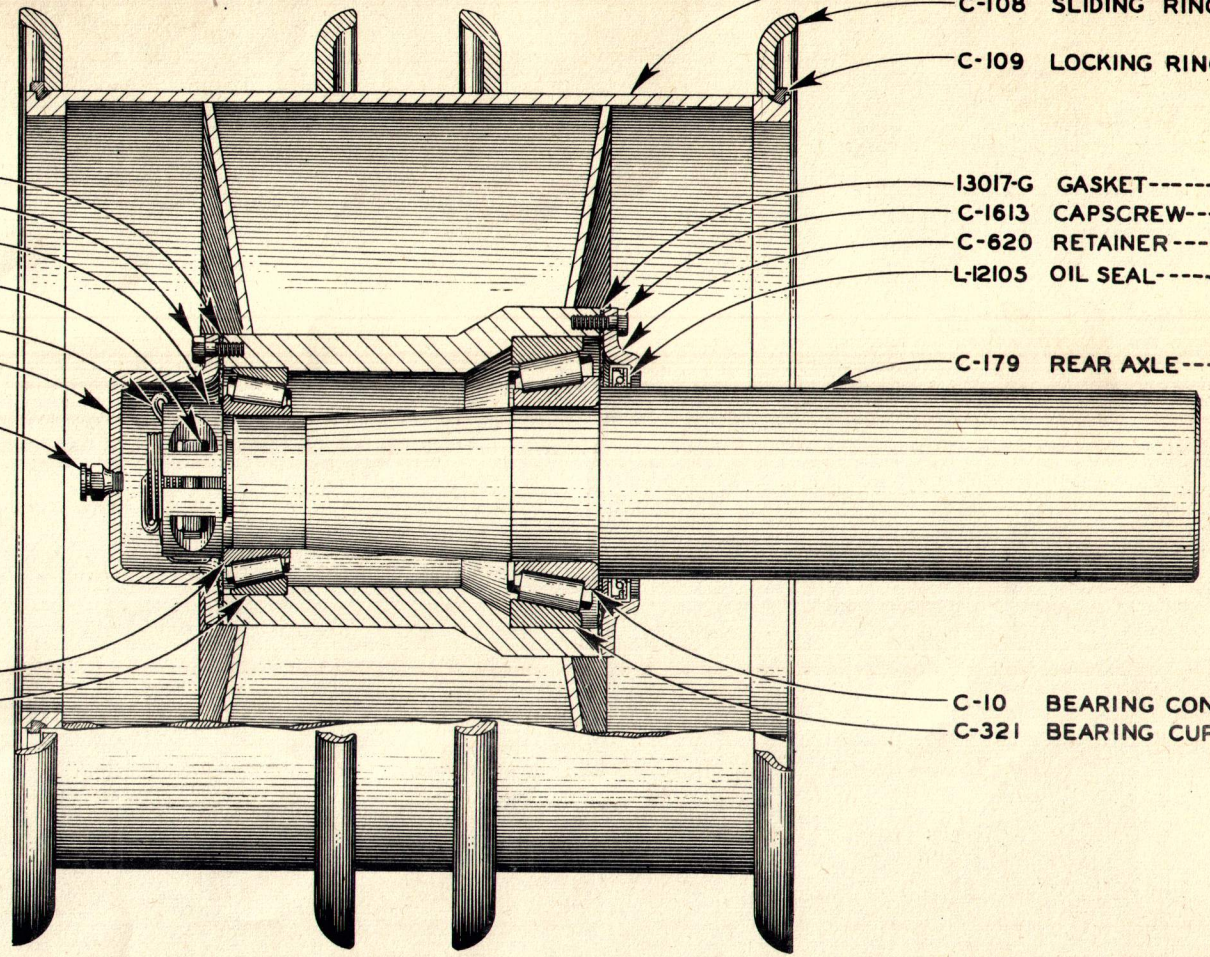

13.50 X 20 REAR DUAL WHEEL

262

PRINTED IN U.S.A.

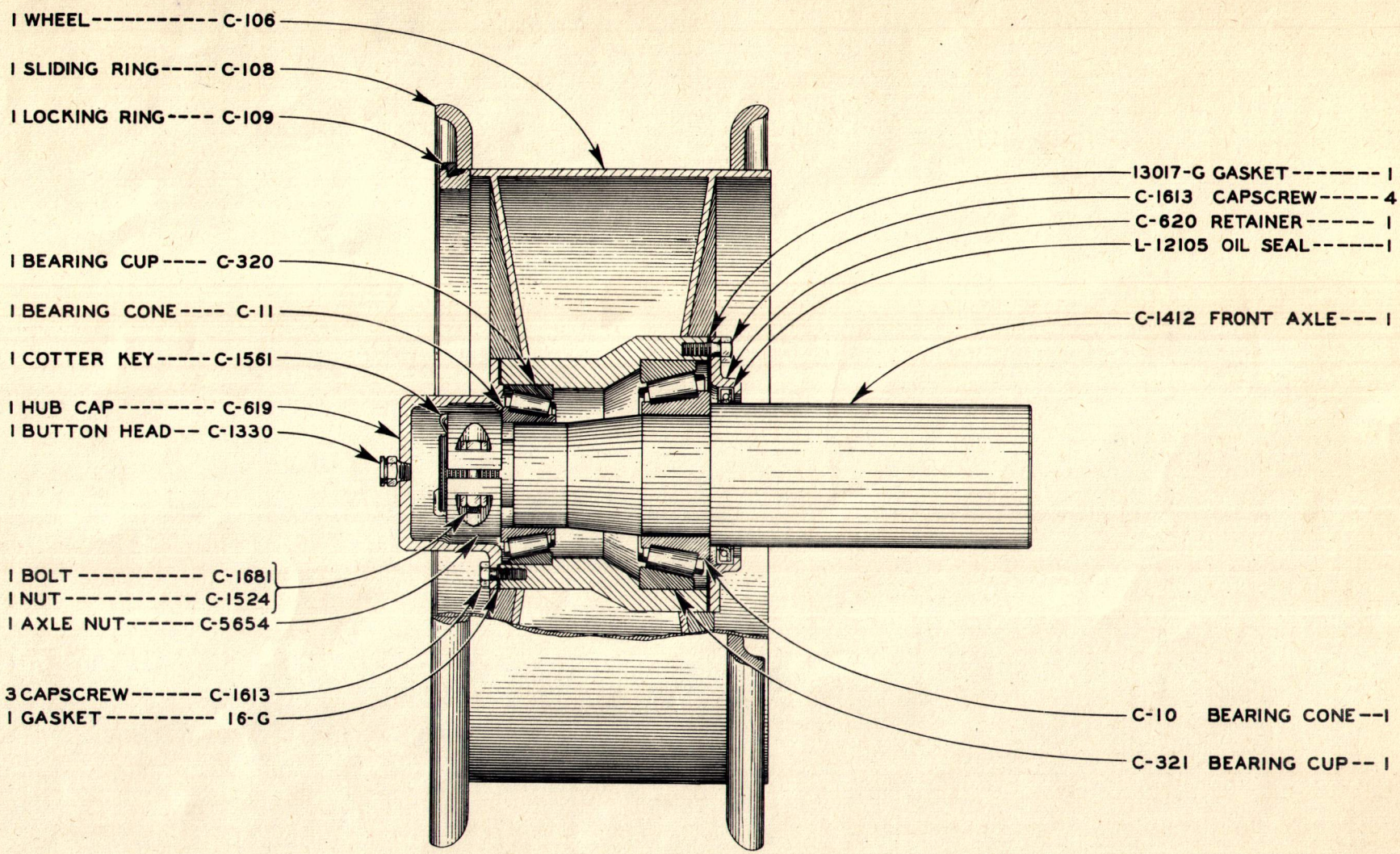

13.50 X 20 SINGLE FRONT WHEEL

ALWAYS GIVE MACHINE NUMBER WHEN ORDERING PARTS

PRINTED IN U.S.A.

CABLE REQUIREMENTS

Note: All Cable ½ x 6 x 19 Wire Rope Center

MODEL	HOIST LINE CABLE	TAILGATE CABLE FURNISHED	TAILGATE CABLE REQUIRED	TAILGATE RETURN CABLE	SPRING PIPE CABLE
J-12	65 Feet - E 1218	300 Feet - E 1223	140 Feet - D 1226	18 Feet - E 1793	
The above effective with serial No. 247J12 to 594J12 and from 2000J12 to 2363J12					
J-12	100 Feet - E 5298	300 Feet - E 1223	140 Feet - D 1226	18 Feet - E 1793	
The above effective with serial No. 598J12 to 861J12 and from 2371J12 to 2561J12					
J-13	65 Feet - E 1218	300 Feet - E 1223	150 Feet - D 1227	18 Feet - E 1793	
The above effective up to serial No. 579J13 and from 2000 to 2360J13					
J-13	100 Feet - E 5298	300 Feet - E 1223	150 Feet - D 1227	18 Feet - E 1793	
The above effective with serial No. 582J13 to 805J13 and from 2371J13 to 2570J13					
JR-12	100 Feet - E 5298	300 Feet - E 1223	140 Feet - D 1226	13 Feet - D 1222	19 Feet - D 1224
The above cable lengths used on all JR12 Scrapers					
JR-13	100 Feet - E 5298	300 Feet - E 1223	150 Feet - D 1227	14 Feet - D 1223	20 Feet - D 1225
The above cable lengths used on all JR13 Scrapers					

267

ALWAYS GIVE MACHINE NUMBER WHEN ORDERING PARTS

PRINTED IN U.S.A.

INSERT AFTER PAGE 10 FORM PC 176 MODEL J12 CARRYALL SCRAPER

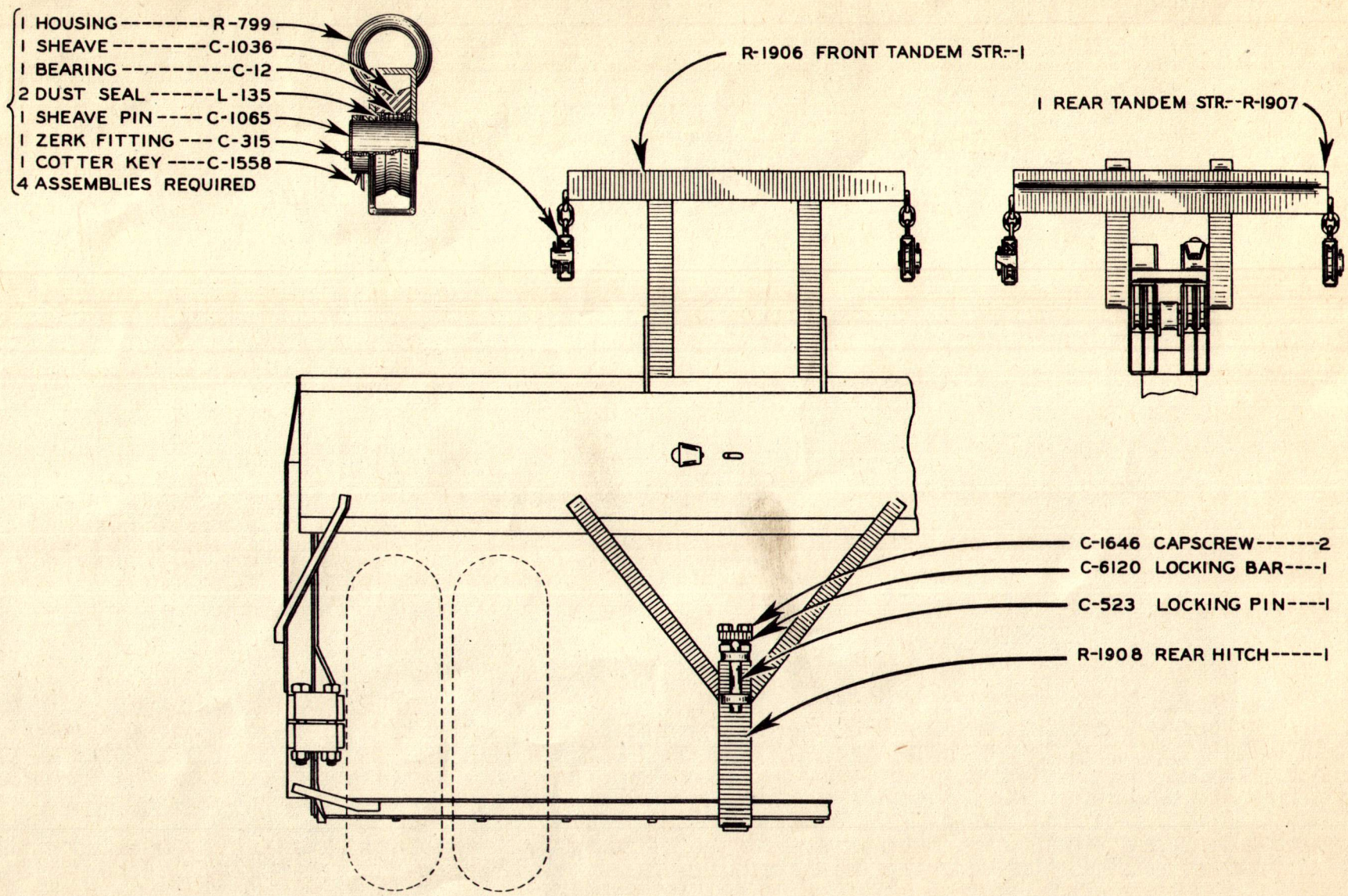

PC-176

1209

TANDEM HOOKUP FOR USE WITH 13.50 X 20 DUAL WHEELS

ALWAYS GIVE MACHINE NUMBER WHEN ORDERING PARTS

PRINTED IN U.S.A.