TC-24-A

PARTS CATALOG

INTERNATIONAL

TDCB32104 7CC

T-9 AND TD 9

ENG. SERIAL TDCBM 23458

TRACTRACTOR

INTERNATIONAL HARVESTER COMPANY
180 NORTH MICHIGAN AVE. CHICAGO 1, ILLINOIS, U.S.A.

(This catalog supersedes TC-24, which should be destroyed.)

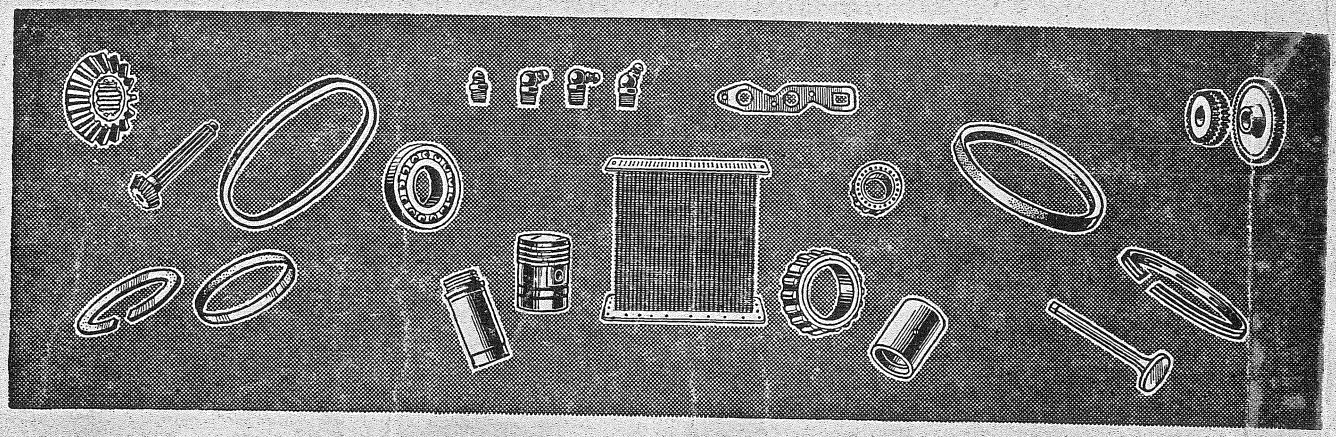

The Importance of an Adequate Parts Stock

When a man buys a machine, he is, if he is wise, as much interested in the *over-all cost* of the machine as he is in its price. Two factors affect the over-all cost:

1. *Original quality.*
2. *Parts service.*

Both of these factors have a direct bearing on the length of useful life of the machine, and frequently on its trade-in value.

In fact, to many buyers, the quality of the parts service is quite as important as the original quality of the machine. In most cases, loss of time for repairs means loss of money to these buyers. Their prime need is to keep their machines on the job—without expensive delays for repairs.

That is why the foresighted International Harvester dealer maintains at all times an adequate stock of parts for servicing International Harvester machines used in his territory. This stock of parts establishes his place of business as the headquarters for International Harvester service in the neighborhood. His income from service and parts sales usually pays a large part of his overhead. And, by providing a *complete* service, he lowers the *over-all cost* of machines—the factor in which the discerning buyer is most interested.

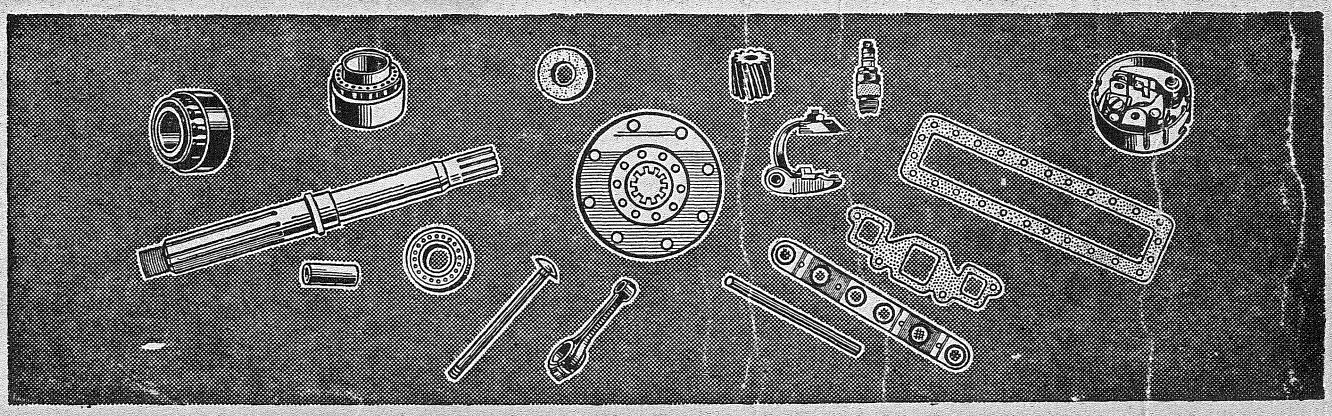

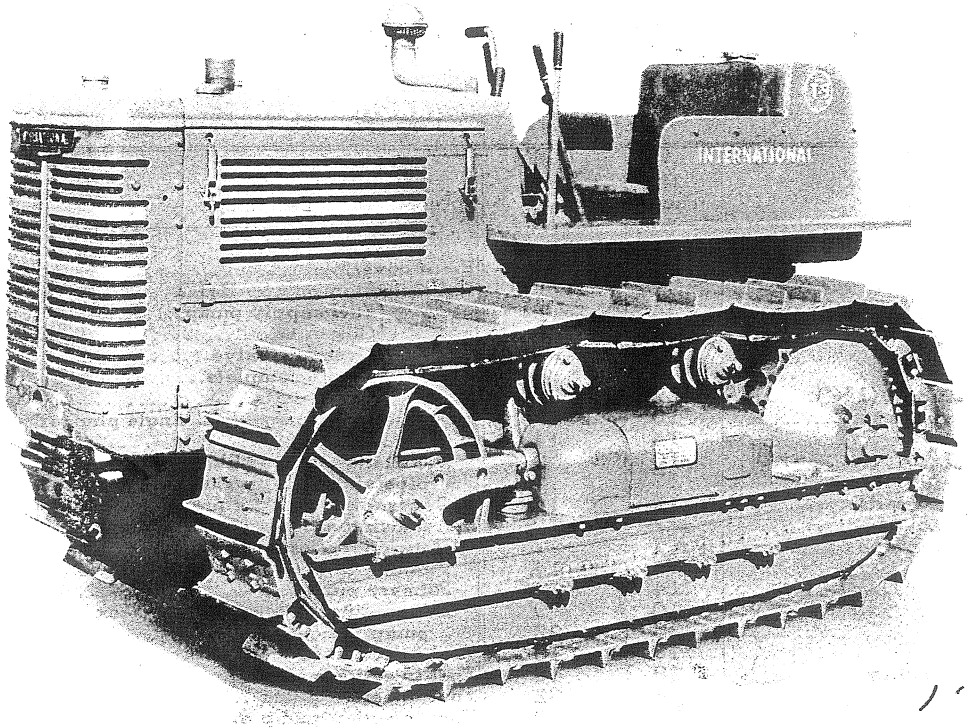

International T-9 TracTracTor equipped with hood side doors.

1" 9 7/8"
21/32 1/2
250335-A1

L.C. SMITH
DEL TD 9
HASSIS SERIAL - TDCB32104 T7CC
ENGINE " - TDCBM 23455

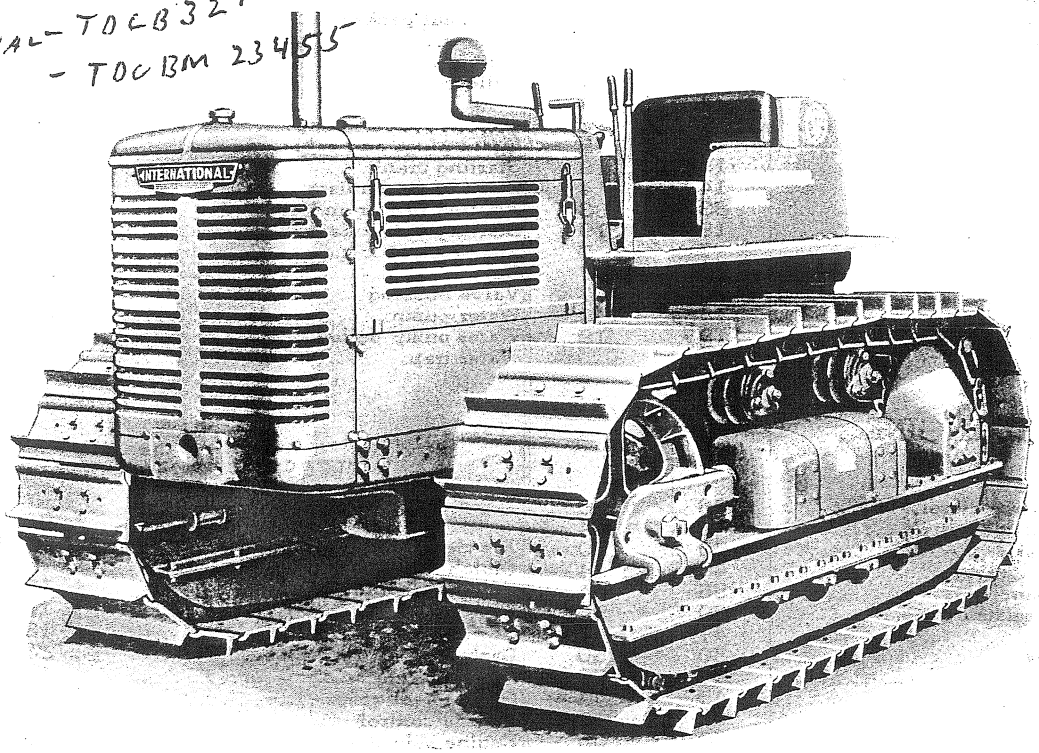

International TD-9 TracTracTor equipped with hood side doors.

INDEX TO UNITS

Description	List Page	Illust. Page
CARBURETED ENGINE		
Carburetor—International (1⅜")	27	27
Camshaft and related parts	10	9
Connecting rods	14	14
Crankcase	10	9
Crankcase oil pan	17	17
Crankshaft and related parts	14	14
Cylinder head	7	7
Cylinder head breather pipe	7	7
Cylinder sleeves	14	14
Drive pulley	14	14
Engine supports	10	9
Exhaust pipe	23	22
Fan	19	19
Fan and water pump pulley	19	19
Filter—lubricating oil	32	32
Front cover	10	9
Fuel pump and connections	31	30
Gaskets—package assorted	186	.....
Governor and connections	24	24
Lubricating oil filter	32	32
Lubricating oil pump	17	17
Magneto connections	33	33
Magneto—International H-4	35	35
Magneto drive and bracket	33	33
Manifold	23	22
Overhaul packages	187	.....
Pistons	14	14
Piston pins	14	14
Pulleys—drive	14	14
fan	19	19
water pump	19	19
Starting crank	14	14
Spark plugs and cables	33	33
Thermostat	19	19
Valves	7	7
Valve housing	7	7
Valve levers	7	7
Water pump	19	19
Water pump pulley	19	19
DIESEL ENGINE		
Carburetor—starting diesel	66	66
Camshaft and related parts	45	44
Connecting rods	50	50
Crankcase	45	44
Crankcase oil pan	55	54
Crankshaft and related parts	50	50
Cylinder head	41	40
Cylinder sleeves	50	50
Drive pulley	50	50
Engine supports	45	44
Exhaust pipe	62	62
Fan	58	58
Fan and water pump pulley	58	58
Filters—fuel	85	84
lubricating oil	56	56
Front cover	45	44
Fuel injection pump—Bosch		
Bosch: Fuel supply pump	93	93
Bosch: Governor	95, 99	94, 98
Bosch: Overflow valve	88	86, 87
Bosch: Pump, complete	88	.....
Bosch: Pump parts	88	86, 87
Fuel injection pump—IHC single plunger		
Control lever	118	118
Distributor valve block, fuel return pipe and high pressure pipe	111	110
Governor spring, torque control, pump housing cover and oil filler	105	104
Housing, governor fork and shaft	117	116
Plunger and governor	109	108
Primary pump	102	102
Scavenging valve, control rack and pump flange	115	114
Fuel injection connections	77, 80	76, 80
Fuel injection nozzles	77, 80	76, 80
Fuel injection pipes	77, 80	76, 80
Fuel injection pump drive	77, 80	76, 80
Gaskets—package assorted	186	.....
Governor control	60	60
Lubricating oil filter	56	56
Lubricating oil pump	55	54
Magneto—International H-4	72	72
Magneto drive and bracket	70	70
Manifold	62	62
Overhaul packages	187	.....
Pistons	50	50
Piston pins	50	50
Pulleys—drive	50	50
fan	56	56
water pump	56	56
Spark plugs and cables	70	70
Starting crank	50	50
Starting mechanism	60	60
Starting primer and control	64	64
Starting valve mechanism	41	40
Thermostat	58	58
Valves	41	40
Valve housing	41	40
Water pump	58	58
Water pump pulley	58	58
Water trap	83	82
CHASSIS		
Air cleaner and connections	133	133
Clutch control and connections	127	126
Clutch—engine overcenter	128	126
steering	151	149
Cowl	131	130
Dash	131	130
Drawbar	175	175
Drive bevel gear	145	145
Engine control	131	130
Engine side sheets	180	180
Equalizer spring	174	174
Equalizer spring—heavy-duty	174A	174A
Fenders	176	176

PRINTED IN UNITED STATES OF AMERICA

INDEX TO UNITS

Description	List Page	Illust. Page
CHASSIS—Continued		
Final Drive		
Drive bevel gear	145	145
Steering brakes and control	152	152
Steering clutch	151	149
Steering clutch control	147	146
Steering clutch release shaft and mechanism	149	149
Fuel pipes	137	136
Fuel tanks	137	136
Fuel injection pump air cleaner	133	133
Front idler	166	166
Gaskets—package assorted	186	.....
Gasoline strainer	139	136
Gear shifter mechanism	141	140
Hand Brake (Modified Units)	155	155
Hood and side sheets	180	180
Improvement packages	187	.....
Instruments	131	130
Instrument panel	131	130
Lubricator—hand	182	182
bucket	183	183
Main frame and covers	121	120
Main frame side channels	122	122
Overhaul packages	187	.....
Package assorted gaskets	186	.....
Radiator and connections	124	124
Radiator shutter	195	195
Seat	176	176
Sprocket drive	157	156
Sprocket drive pinion and shaft	157	156
Steering brakes and control	152	152
Steering clutch	151	149
Steering clutch control	147	146
Steering clutch release shaft and mechanism	149	149
Tools	181	181
Track assembly		
Front idler	166	166
Track chain	168	168
Track frame	161	161
Track frame diagonal brace	172	172
Track idler	161	161
Track rollers	161	161
Track roller shield	161	161
Track shoes	171	170
Track spring	161	161
Track Drive		
Sprocket drive	157	156
Sprocket drive pinion and shaft	157	156
Track frame pivot shaft	157	156
Track frame	161	161
Track frame diagonal brace	172	172
Track frame guide	122	122
Track frame guide rollers	122	122
Track frame guide roller brackets	122	122
Track frame pivot shaft	157	156
Track idler	161	161
Track rollers	161	161
Track roller shield	161	161
Track shoes	171	170
Track springs	161	161
Transmission	141	140
ATTACHMENTS—Special		
Air pipe extension	193	193
Belt pulley	201	200
Belt pulley drive shaft	199	199
Crankcase guard	190	190
Cutaway sprocket	157	156
Electrical Equipment		
Lamps and parts	226, 235, 236	235, 236
Lighting—Bosch No-Battery generator	230	228
Lighting—Delco-Remy	220	212, 214, 218
Lighting switch	234	234
Starting—Delco-Remy	220	210, 214, 216, 218
Exhaust extension	192	192
Exhaust muffler	192	192
Extended track frame	165	161
Front bumper	191	191
Front idler shield	196	196
Front power take-off coupling	189	189
Front pull hook	190	190
Guards—crankcase	190	190
radiator	191	191
Heavy duty track roller shield	161	161
Heavy front idler	167	166
High altitude pistons	14	14
High seat	179	176
Hood side doors	209	209
Hour meter	207	207
Low boiling point thermostat and heat indicator	19, 58	19, 58
Muffler	192	192
Odometer	208	208
Pre-cleaner	194	194
Power take-off—front coupling	189	189
rear	199	199
rear (reduced speed)	204	204
Radiator guard	191	191
Radiator shutter	195	195
Reduced speed power take-off, rear	204	204
Reverse flow fan (Modified Units)	19, 58	19, 58
Rigid track frame	198	198
Shields—front idler	196	196
track roller (heavy duty	161	161
Spark arrester	192	192
Sprocket—cutaway	196	196
Sprocket drive gear housing outer cap screw guard	196	196
Sprocket rock deflector	197	197
Track roller shield (heavy duty)	161	161

DETAILS OF ASSEMBLY ..... page 237
NUMERICAL INDEX ..... page 281

MEMORANDA

CARBURETED ENGINE

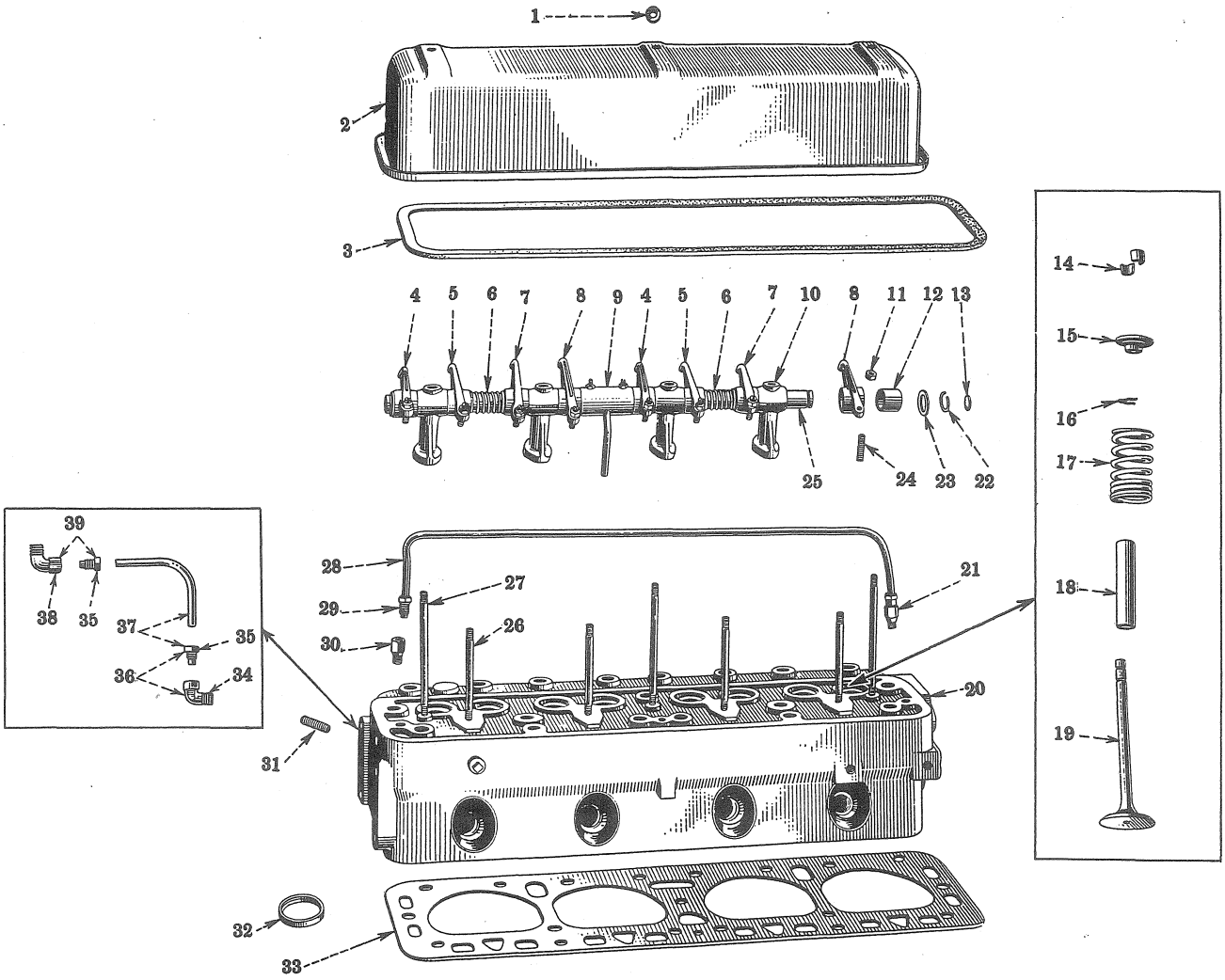

Reference numbers only are shown in illustration. Use I H C part numbers in ordering.
Unnumbered parts in the illustrations are the same as corresponding parts shown with numbers.

PART NUMBER	REF. NO.	DESCRIPTION	SERIAL NUMBER	NO. REQ'D	
		CYLINDER HEAD, VALVE HOUSING, VALVES AND VALVE LEVERS			
58511 D	1	Valve Cover Stud Nut Washer (Order 62866 D)		3	
62866 D	1	Valve Cover Stud Nut Washer (Will Work for 58511 D)		3	
52791 DX	2	Valve Cover		1	
52793 DA	3	Valve Cover Gasket		1	
46224 DAX	4	Exhaust Valve Lever, R.H. with Bushing, 46225 DA		2	
46221 DAX	5	Intake Valve Lever, L.H. with Bushing, 46225 DA		2	
52786 D	6	Valve Lever Spring		2	
46222 DAX	7	Intake Valve Lever, R.H. with Bushing, 46225 DA		2	
46223 DAX	8	Exhaust Valve Lever, L.H. with Bushing, 46225 DA		2	
52784 DX	9	Valve Lever Shaft Oil Sleeve		1	
		Set Screw, 1/4 x 5/8" N.C. Headless (Cone Point)		2	
		Hex. Jam Nut, 1/4" N.C.		2	

CARBURETED ENGINE

PART NUMBER	REF. NO.	DESCRIPTION	SERIAL NUMBER	NO. REQ'D
8294 D	10	Valve Lever Bracket		4
38763 H	11	Valve Lever Adjusting Screw Nut		8
46225 DA	12	Valve Lever Bushing		8
27080 H	13	Valve Lever Shaft End Expansion Plug, 11/16"		2
48057 D	14	Valve Spring Seat Key		16
48056 DA	15	Valve Spring Seat		8
48055 D	16	Valve Stem Retainer		8
32483 DA	17	Valve Spring	TCBM 501 to 779	8
61808 D	17	Valve Spring	TCBM 780 Up	8
8293 DR	18	Valve Guide (Kerosene or Distillate-Gasoline)		8
8322 DR	18	Valve Guides (High Compression Gasoline)		8
52824 D	19	Intake Valve (High Compression Gasoline)		4
52825 DA	19	Exhaust Valve (High Compression Gasoline)		4
61506 D	19	Intake Valve (Kerosene or Distillate-Gasoline)		4
61507 D	19	Exhaust Valve (Kerosene or Distillate-Gasoline)		4
8320 DBX	20	Cylinder Head with Studs and Valve Guides (High Compression Gasoline)		1
8320 DBY	20	Cylinder Head, 8320-DBX with Valves and Springs (High Compression Gasoline)		1
9195 DAX	20	Cylinder Head with Studs and Valve Guides (Kerosene or Distillate-Gasoline)		1
9195 DAY	20	Cylinder Head, 9195-DAX with Valves and Springs (Kerosene or Distillate-Gasoline)		1
38026 DMX	21	Cylinder Head Breather Pipe Connector with Nut, 37165 D		2
49950 D	22	Valve Lever Shaft Snap Ring		2
52787 D	23	Valve Lever Shaft Spring Washer		2
16067 D	24	Valve Lever Adjusting Screw		8
52783 DX	25	Valve Lever Shaft with End Plug, 27080 H		2
50338 D	26	Valve Lever Shaft Bracket Stud		4
		Hex. Nut, 3/8" N.F.		4
52780 D	27	Valve Cover Stud		3
		Hex. Nut, 3/8" N.F.		3
52788 DX	28	Cylinder Head Breather Pipe with 2 Nuts, 37165 D		1
37165 D	29	Cylinder Head Breather Pipe Connector Nut		2
38026 DM	30	Cylinder Head Breather Pipe Connector		2
52778 D	31	Manifold to Cylinder Head Stud		6
8292 D	32	Exhaust Valve Seat Insert		4
52795 DD	33	Cylinder Head Gasket		1
37323 D	34	Cylinder Head Breather Pipe Elbow (Cylinder Head End)		1
57736 D	34	Cylinder Head Breather Pipe Elbow (Used on Modified Units Adams 75)		1
37165 D	35	Cylinder Head Breather Pipe Elbow Nut		2
37323 DX	36	Cylinder Head Breather Pipe Elbow with Nut, 37165 D		1
57736 DX	36	Cylinder Head Breather Pipe Elbow with Nut, 37165 D		
		(Used on Modified Units Adams 75)		1
55378 DAX	37	Cylinder Head Breather Pipe with 2 Nuts, 37165 D (Air Cleaner to Cylinder Head)		1
62467 DX	37	Cylinder Head Breather Pipe with 2 Nuts, 37165 D		
		(Air Cleaner to Cylinder Head) (Used on Modified Units Adams 75)		1
55379 D	38	Cylinder Head Breather Pipe Elbow (Air Cleaner End)		1
55999 D	38	Cylinder Head Breather Pipe Coupling (Used on Modified Units Adams 75)		1
55379 DX	39	Cylinder Head Breather Pipe Elbow with Nut, 37165 D		1
55999 DX	39	Cylinder Head Breather Pipe Coupling with 2 Nuts, 37165 D		
		(Used on Modified Units Adams 75)		1
58554 D		Gasoline Burning Attachment (Special)		1
23141 D		Cylinder Head Breather Pipe Clip (Used on Modified Units Adams 75)		1
23142 D		Cylinder Head Breather Pipe Clip Felt (Used on Modified Units Adams 75)		1

Reference numbers only are shown in illustration. Use I H C part numbers in ordering. Unnumbered parts in the illustrations are the same as corresponding parts shown with numbers.

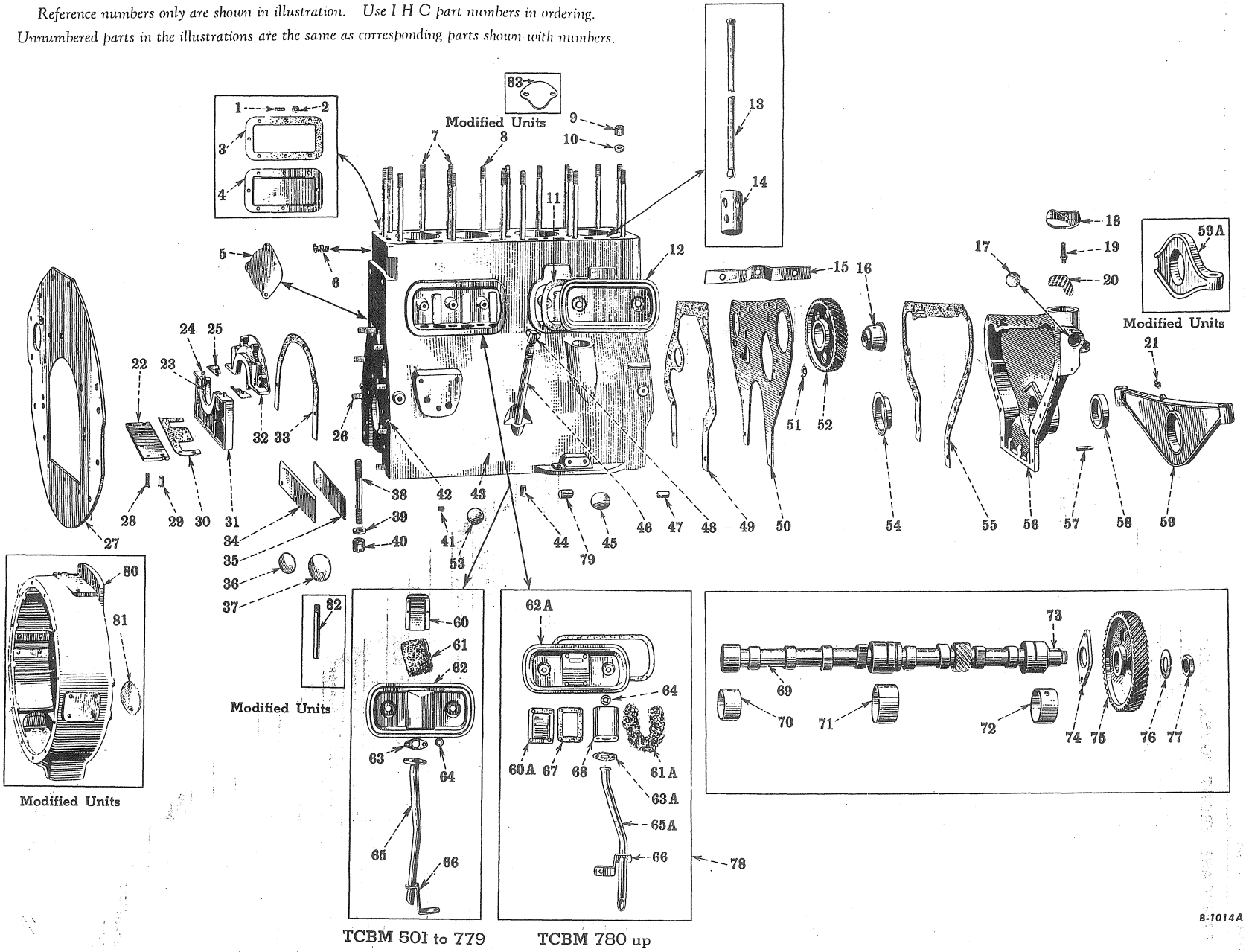

CRANKCASE, FRONT COVER, FRONT AND REAR ENGINE SUPPORTS, CAMSHAFT AND RELATED PARTS

GENUINE IHC PARTS

CARBURETED ENGINE

CRANKCASE, FRONT COVER, FRONT AND REAR ENGINE SUPPORTS, CAMSHAFT AND RELATED PARTS

PART NUMBER	REF. NO.	DESCRIPTION	SERIAL NUMBER	NO. REQ'D
29070 D	1	Water Header Stud		3
		Hex. Nut, 5/16" N.F.		3
28950 D	2	Water Header Stud Nut Washer		16
51316 D	3	Water Header Gasket		2
51313 D	4	Water Header		2
		Cap Screw, 5/16 x 5/8" N.C. Hex Head		13
21069 V	5	Starting Motor Pad Cover		1
		Cap Screw, 3/8 x 5/8" N.C. Hex. Head		2
		Lockwasher, 3/8"		2
31729 D	6	Crankcase Water Drain Cock		1
52790 D	7	Cylinder Head Stud, Long		6
52789 D	8	Cylinder Head Stud, Short		13
32888 D	9	Cylinder Head Stud Nut (Order 61316 D)		19
61316 D	9	Cylinder Head Stud Nut (Will Work for 32888 D)		19
59109 D	10	Cylinder Head Stud Nut Washer (Order 61317 D)		4
61317 D	10	Cylinder Head Stud Nut Washer (Will Work for 59109 D)		4
47984 D	11	Push Rod Chamber Side Plate Gasket	TCBM 501 to 779	2
60570 D	11	Push Rod Chamber Side Plate Gasket	TCBM 780 Up	2
51324 D	12	Push Rod Chamber Side Plate, Front		1
		Cap Screw, 3/8 x 1-1/8" N.C. Hex Head		2
52822 DX	13	Valve Push Rod		8
45956 D	14	Valve Tappet		8
51790 D	15	Valve Tappet Stop		2
		Cap Screw, 3/8 x 5/8" N.C. Hex. Head		2
		Lockwasher, 3/8"		2
6392 DX	16	Idler Gear Shaft with Dowel Pin		1
		Cap Screw, 1-1/2 x 1-1/2" N.C. Hex. Head		1
13806 D	17	Hour Meter Pad Expansion Plug, 1-1/4"		1
4819 D	18	Oil Filler Cap		1
24517 D	19	Oil Filler Cap Stud		1
		Hex. Nut, 3/8" N.C.		1
55627 D	20	Oil Filler Screen		1
Q 3615	21	Front Engine Support Lubricator (14186 DA Will Work)		1
14186 DA	21	Front Engine Support Lubricator (Q 3615 Will Work)		1
52762 DX	22	Crankcase Oil Seal Retainer Plate with 2 Studs, 46135 D		1
		Cap Screw, 3/8 x 1" N.C. Hex. Head		4
		Lockwasher, 3/8"		4
47697 DB	23	Crankshaft Rear Oil Seal Felt		2
25076 D	24	Crankshaft Rear Oil Seal Retainer Dowel Pin		2
47696 D	25	Crankshaft Rear Oil Seal Retainer Gasket, Center		2
49952 D	26	Rear Engine Support Stud (Used on Modified Unit Adams 75)		9
53560 D	26	Rear Engine Support Stud		9
		Hex. Nut, 5/8" N.F.		9
		Lockwasher, 5/8"		9

CARBURETED ENGINE

PART NUMBER	REF. NO.	DESCRIPTION	SERIAL NUMBER	NO. REQ'D	
51336 DX	27	Rear Engine Support		1	
		Cap Screw, 3/8 x 7/8" N.C. Hex. Head		1	
		Cap Screw, 1/2 x 1-1/4" N.C. Hex. Head		6	
		Cap Screw, 5/8 x 2" N.C. Hex Head		x	
		Lockwasher, 3/8"		1	
		Lockwasher, 1/2"		6	
		Lockwasher, 5/8"		2	
46135 D	28	Crankshaft Rear Oil Seal Retainer Plate Stud		2	
		Hex. Nuts, 3/8" N.F.		2	
		Lockwasher, 3/8"		2	
25093 DA	29	Crankcase Oil Seal Retainer Plate Felt Plug		2	
51312 D	30	Crankcase Oil Seal Retainer Plate Gasket		1	
6534 DAX	31	Crankshaft Rear Oil Seal Retainer, Lower, with 2 Dowel Pins, 25076 D			
		(9268 DX Will Work)		1	
		Cap Screw, 3/8 x 1-3/8" N.C. Hex. Head		2	
		Lockwasher, 3/8"		2	
		Washer, 13/32" I.D. x 3/4" O.D. x No. 16 Ga.		2	
9268 DX	31	Crankshaft Rear Oil Seal Retainer, Lower, with 2 Dowel Pins, 25076 D			
		(6534 DAX Will Work)		1	
		Cap Screw, 3/8 x 1-3/8" N.C. Hex. Head		2	
		Lockwasher, 3/8"		2	
		Washer, 13/32" I.D. x 3/4" O.D. x No. 16 Ga.		2	
6533 DA	32	Crankshaft Rear Oil Seal Retainer, Upper (9267 DA Will Work)		1	
		Cap Screw, 3/8 x 1-3/8" N.C. Hex. Head		4	
		Cap Screw, 3/8 x 3" N.C. Hex. Head		2	
		Lockwasher, 3/8"		6	
		Washer, 13/32" I.D. x 3/4" O.D. x No. 16 Ga.		6	
9267 D	32	Crankshaft Rear Oil Seal Retainer, Upper (6533 DA Will Work)		1	
		Cap Screw, 3/8 x 1-3/8" N.C. Hex. Head		4	
		Cap Screw, 3/8 x 3" N.C. Hex. Head		2	
		Lockwasher, 3/8"		6	
		Washer, 13/32" I.D. x 3/4" O.D. x No. 16 Ga.		6	
47698 D	33	Crankshaft Rear Oil Seal Retainer Gasket		1	
46137 D	34	Crankcase Rear Dust Seal Gasket		1	
46136 D	35	Crankcase Rear Dust Seal		1	
		Cap Screw, 3/8 x 5/8" N.F. Hex. Head		3	
		Lockwasher, 3/8"		3	
13231 D	36	Crankcase Water Jacket Expansion Plug, 1-3/4" (End)		4	
13439 V	37	Camshaft Rear Bearing Expansion Plug, 2-1/8"		1	
47840 D	38	Crankshaft Bearing Cap Stud		6	
		Cotter Pin, 1/8 x 1-3/8"		6	
46246 D	39	Crankshaft Bearing Cap Stud Nut Washer		6	
43598 V	40	Crankshaft Bearing Cap Stud Nut		6	
50410 DA	41	Oil Hole Clean Out Plug, 1/8"		1	
50410 DA	41	Oil Header Plug, 1/8"		3	
25086 DA	42	Rear Engine Support Dowel Pin		2	
8318 D	43	Crankcase (Order 62277 DD or 62278 DB Together with			
		Center Bearing 63380 DX)	TCBM 501 to 856	1	
8318 DB	43	Crankcase (Order 8323 DCX or 8323 DCZB Together with			
		Center Bearing 63380 DX)	TCBM 857 to 2141	1	

X - As Required

CARBURETED ENGINE

PART NUMBER	REF. NO.	DESCRIPTION	SERIAL NUMBER	NO. REQ'D
8318 DC	43	Crankcase (Order 8323 DCX or 8323 DCZB)	TCBM 2142 up	1
8323 DCX	43	Crankcase with Studs and Camshaft Bearings, Complete		
		(Together with Center Bearing 63380 DX Will Work for 8318 DB)	TCBM 857 to 2141	1
8323 DCX	43	Crankcase with Studs and Camshaft Bearings, Complete		
		(Will Work for 8318 DC)	TCBM 2142 up	1
8323 DCZB	43	Crankcase, 8323 DCX with Cylinder Sleeves and Pistons, Complete		
		(Together with Center Bearing, 63380 DX Will Work for 8318 DB)	TCBM 857 to 2141	1
8323 DCZB	43	Crankcase, 8323 DCX with Cylinder Sleeves and Pistons, Complete		
		(Will Work for 8318 DC)	TCBM 2142 up	1
62277 DD	43	Crankcase, 8323 DCZB with Cylinder Head Gasket, 52795 DD		
		(Together with Center Bearing, 63380 DX Will Work for 8318 D)	TCBM 501 to 856	1
62278 DB	43	Crankcase, 8323 DCX with Cylinder Head Gasket, 52795 DD		
		(Together with Center Bearing, 63380 DX Will Work for 8318 D)	TDCBM 501 to 856	1
52606 D	44	Crankcase Locating Hole Plug		
		(Order No. 6 Standard Cork No. 2 x Grade 9/16 x 3/4 x 15/16" Long)		2
13231 D	45	Distributor Hole Expansion Plug, 1-3/4"		1
48262 D	46	Oil Level Gauge Sleeve (Used on Modified Units Adams 75)		1
51325 D	46	Oil Level Gauge Sleeve		1
52605 D	47	Crankcase Front Plate and Cover Dowel Pin		2
52774 DX	48	Oil Level Gauge		1
52776 DX	48	Oil Level Gauge (Used on Modified Units Adams 75)		1
52799 D	49	Crankcase Front Plate Gasket		1
52798 DX	50	Crankcase Front Plate		1
		Cap Screw, 3/8" x 7/8" N.C. Hex. Head		4
46251 D	51	Crankcase Front Plate Cap Screw Lock		4
52758 DX	52	Idler Gear with Bushing (53 Teeth)		1
13806 D	53	Crankcase Water Jacket Expansion Plug, 1-1/4" (Side)		2
46129 D	54	Crankshaft Front Oil Deflector		1
52800 D	55	Crankcase Front Cover Gasket		1
8303 DX	56	Crankcase Front Cover, Complete		1
		Cap Screw, 3/8" x 1" N.C. Hex. Head		2
		Cap Screw, 3/8" x 1-3/8" N.C. Hex. Head		9
		Lockwasher, 3/8"		11
55628 D	57	Timing Pointer		1
53872 D	58	Crankshaft Front Oil Seal		1
48296 D	59	Front Engine Support		1
		Cap Screw, 1/2" x 2-3/4" N.F. Hex. Head		2
		Hex. Nut, 1/2" N.F.		2
		Lockwasher, 1/2"		2
8553 D	59 A	Front Engine Support (Used on Modified Units Adams 75)		1
46696 DX	60	Breather Baffle	TCBM 501 to 779	1
		Machine Screw, No. 8 - 32 x 3/8" Round Head		2
		Lockwasher, No. 8		2
59480 D	60A	Breather Baffle	TCBM 780 up	1
50975 D	61	Breather Element	TCBM 501 to 779	1
59482 D	61A	Breather Element	TCBM 780 up	1
52007 DX	62	Push Rod Chamber Side Plate, Rear (Order 60599 D)	TCBM 501 to 779	1
		Cap Screw, 3/8" x 1-1/4" N.C. Hex. Head		2

X - As required.

CARBURETED ENGINE

PART NUMBER	REF. NO.	DESCRIPTION	SERIAL NUMBER	NO. REQ'D
59488 D	62A	Push Rod Chamber Side Plate, Rear	TCBM 780 Up	1
		Cap Screw, 3/8" x 1-1/8" N.C. Hex. Head		2
46700 D	63	Breather Pipe Flange Gasket	TCBM 501 to 779	1
59484 D	63A	Breather Pipe Flange	TCBM 780 Up	1
		Cap Screw, 5/16" x 7/8" N.C. Hex. Head		2
		Lockwasher, 5/16"		2
49387 D	64	Push Rod Chamber Side Plate Bolt Washer (Order 62866-D)		4
62866 D	64	Push Rod Chamber Side Plate Bolt Washer (Will Work for 49387-D)		4
60571 DX	65	Breather Pipe	TCBM 501 to 779	1
		Cap Screw, 5/16 x 3/4" N.F. Hex Head		2
		Lockwasher, 5/16"		2
59489 D	65A	Breather Pipe	TCBM 780 Up	1
59487 D	66	Breather Pipe Clip		1
59481 D	67	Breather Body Gasket	TCBM 780 Up	1
8959 D	68	Breather Body (9258 D Will Work)	TCBM 780 Up	1
		Machine Screw, No. 10 - 24 x 1/2" N.C. Round Head		4
		Lockwasher, No. 10		4
9258 D	68	Breather Body (8959 D Will Work)	TCBM 780 Up	1
		Machine Screw, No. 10 - 24 x 1/2" N.C. Round Head	TCBM 780 up	4
		Lockwasher, NO. 10		4
52761 D	69	Camshaft		1
51308 DAR	70	Camshaft Bearing, Rear		1
52797 DAR	71	Camshaft Bearing, Center		1
52796 DAR	72	Camshaft Bearing, Front		1
7235 T	73	Camshaft Gear Key (Woodruff "A"- 1/4 x 7/8")		1
50948 DA	74	Camshaft Thrust Plate		1
		Cap Screw, 3/8" x 7/8" N.C. Hex. Head		2
		Lockwasher, 3/8"		2
50949 D	75	Camshaft Gear (54 Teeth)		1
16025 D	76	Camshaft Gear Nut Lock		1
24569 D	77	Camshaft Gear Nut		1
60599 D	78	Side Plate and Breather, Complete (Will Work for 52007 DX)	TCBM 501 to 779	1
63282 D	79	Crankshaft Center Bearing Dowel Pin	TCBM 2142 up	2
8554 D	80	Flywheel Housing (Used on Modified Units Adams 75)		1
25063 DA	81	Pilot Bearing Lubricator Cover (Used on Modified Units Adams 75)		1
51203 DA	82	Oil Level Gauge Pipe (Used on Modified Units Adams 75)		1
29710 D	83	Fuel Pump Opening Cover (Used on Modified Units Adams 75)		1
48117 D		Front Engine Support Shim, Heavy (Order 48384-D)		2
48118 D		Front Engine Support Shim, Light (Order 48385-D)		x
48384 D		Front Engine Support Shim, Heavy (Will Work for 48117 D)		2
48385 D		Front Engine Support Shim, Light (Will Work for 48118 D)		x
41634 H		Idler Gear Shaft Lockwasher (Shakeproof No. 1224)		1
54909 H		Crankcase Machine Screw Gasket		x

X - As required.

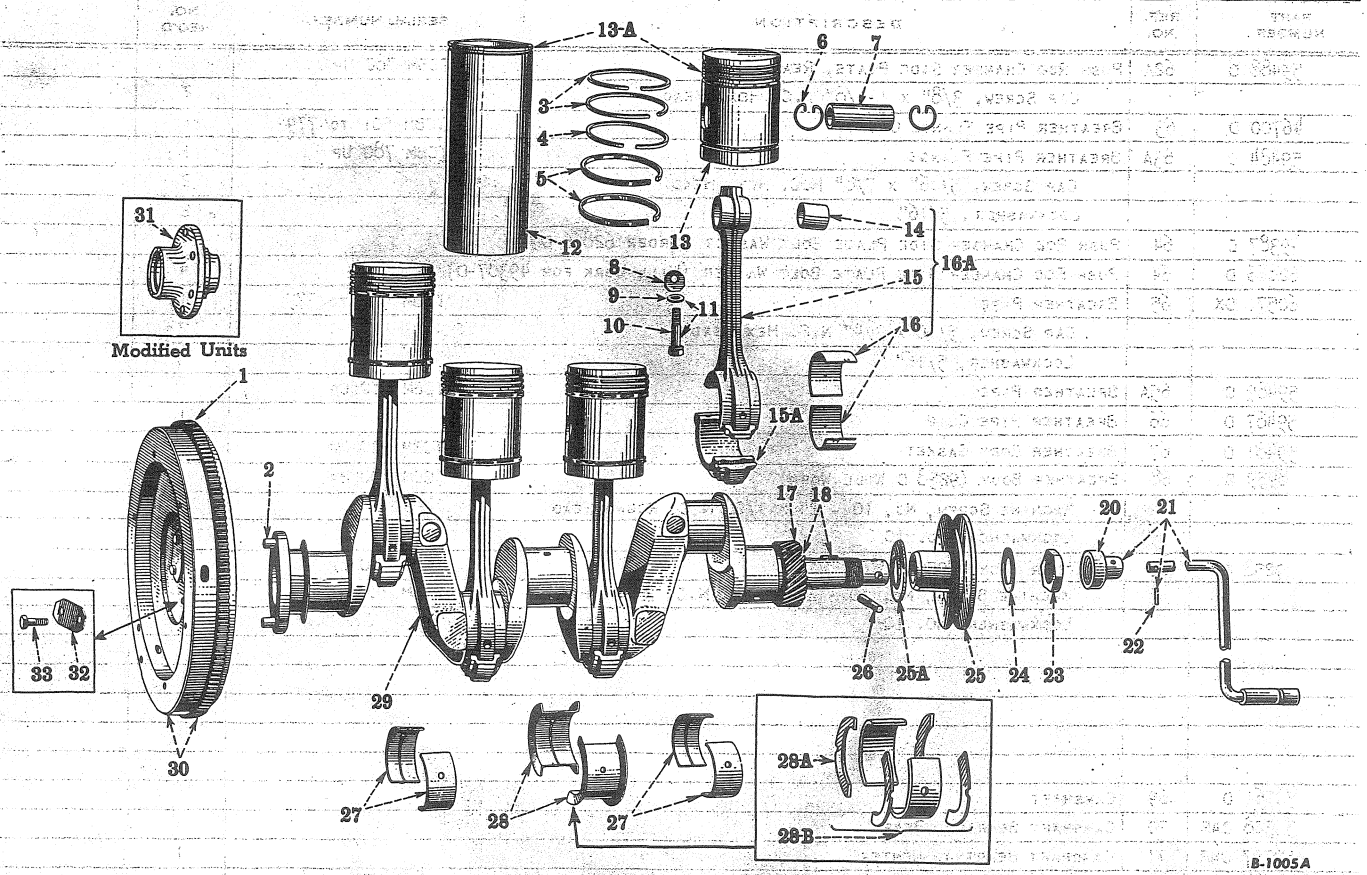

Reference numbers only are shown in illustration. Use I H C part numbers in ordering.
Unnumbered parts in the illustrations are the same as corresponding parts shown with numbers.

CRANKSHAFT AND RELATED PARTS, CONNECTING RODS, PISTONS, CYLINDER SLEEVES, DRIVE PULLEY, FLYWHEEL AND STARTING CRANK

33817 DB	1	Flywheel Ring Gear (149 Teeth)		1	
46923 D	2	Crankshaft to Flywheel Dowel Pin		2	
50956 D	3	Piston Ring, 5/32" (Compression - Plain)		8	
52754 D	4	Piston Ring, 5/32" (Compression - Taper Face)		4	
47953 D	5	Piston Ring, 1/4" (Oil Regulating)	TCBM 501 to 2374	4	
47953 D	5	Piston Ring, 1/4" (Oil Regulating)	TCBM 3729 up	8	
67812 D	5	Piston Ring, 1/4" (Oil Regulating)	TCBM 2375 to 3728	4	
31194 H	6	Piston Pin Retainer Ring		8	
47643 DA	7	Piston Pin (Standard) (Order 52608 DA)		4	
52608 DA	7	Piston Pin (.005" Oversize) (Will Work for 47643 DA)		4	
47507 DA	8	Connecting Rod Bolt Lock		8	
63122 D	9	Connecting Rod Bolt Washer	TCBM 2398 up	8	
45964 DA	10	Connecting Rod Bolt (Order 63121 DX)	TCBM 501 to 2397	8	
63121 D	10	Connecting Rod Bolt	TCBM 2398 up	8	
63121 DX	11	Connecting Rod Bolt with Washer, 63122 D			
		(Will Work for 45964 DA)	TCBM 501 to 2397	8	
8287 DR	12	Cylinder Sleeve (Order Cylinder Sleeve with Piston,			
		Complete for Standard or High Altitude)		4	
9721 D	13	Piston (Standard) (Order 68782 D)	TCBM 3729 up	4	

CARBURETED ENGINE

PART NUMBER	REF. NO.	DESCRIPTION	SERIAL NUMBER	NO. REQ'D
8286 DR	13	Piston (Standard) (Order 56253 DA)	TCBM 501 to 3728	4
9000 DR	13	Piston (5000 Ft. Altitude-Special) (Kerosene or Distillate-Gasoline)		
		(Order 60193-DA)	TCBM 501 to 3728	4
9000 DR	13	Piston (8000 Ft. Altitude - Special) (High Compression Gasoline)		
		(Order 60193 DA)	TCBM 501 to 3728	4
9001 DR	13	Piston (8000 Ft. Altitude - Special) (Kerosene or Distillate-Gasoline)		
		(Order 60194 DA)	TCBM 501 to 3728	4
9111 DR	13	Piston (5000 Ft. Altitude - Special) (High Compression Gasoline)		
		(Order 60803 D)	TCBM 501 to 3728	4
9722 DR	13	Piston (5000 Ft. Altitude - Special) (Kerosene or Distillate-Gasoline)		
		(Order 68784-D)	TCBM 3729 up	4
9722 DR	13	Piston 8000 Ft. Altitude - Special (High Compression Gasoline)		
		(Order 68784 D)	TCBM 3729 up	4
9723 DR	13	Piston (5000 Ft. Altitude - Special) (High Compression Gasoline)		
		(Order 68786 D)	TCBM 3729 up	4
9748 DR	13	Piston 8000 Ft. Altitude-Special) (Kerosene or Distillate-Gasoline)		
		(Order 68788 D)	TCBM 3729 up	4
56253 DA	13A	Cylinder Sleeve with Piston, Complete (Standard)	TCBM 501 to 3728	4
56254 DB	13A	Set of Four Cylinder Sleeves with Pistons, 68782 D (Standard)		1
60147 DA	13A	Set of Four Cylinder Sleeves with Pistons, 68784 D		
		(8000 Ft. Altitude - Special) (High Compression Gasoline)		1
60193 DA	13A	Cylinder Sleeve with Piston, Complete (5000 Ft. Altitude - Special)		
		(Kerosene or Distillate-Gasoline)	TCBM 501 to 3728	4
60193 DA	13A	Cylinder Sleeve with Piston, Complete (8000 Ft. Altitude-Special)		
		(High Compression Gasoline)	TCBM 501 to 3728	4
60194 DA	13A	Cylinder Sleeve with Piston, Complete (8000 Ft. Altitude-Special)		
		(Kerosene or Distillate-Gasoline)	TCBM 501 to 3728	4
60803 DA	13A	Cylinder Sleeve with Piston, Complete (5000 Ft. Altitude-Special)		
		(High Compression Gasoline)	TCBM 501 to 3728	4
60147 DB	13A	Set of Cour Cylinder Sleeves with Pistons, 68784 D		
		(5000 Ft. Altitude - Special) (Kerosene or Distillate-Gasoline)		1
60149 DB	13A	Set of Four Cylinder Sleeves with Pistons, 68788 D		
		(8000 Ft. Altitude - Special) (Kerosene or Distillate-Gasoline)		1
60802 DB	13A	Set of Four Cylinder Sleeves with Pistons, 68786 D		
		(5000 Ft. Altitude - Special) (High Compression Gasoline)		1
68782 D	13A	Cylinder Sleeve with Piston, Complete (Standard)	TCBM 3729 up	4
			TCBM 501 to 2374	4
68784 D	13A	Cylinder Sleeve with Piston, Complete (5000 Ft. Altitude-Special)		
		(Kerosene or Distillate-Gasoline)	TCBM 3729 up	4
68784 D	13A	Cylinder Sleeve with Piston, Complete (8000 Ft. Altitude-Special)		
		(High Compression Gasoline)	TCBM 3729 up	4
68786 D	13A	Cylinder Sleeve with Piston, Complete (5000 Ft. Altitude-Special)		
		(High Compression Gasoline)	TCBM 3729 up	4
68788 D	13A	Cylinder Sleeve with Piston, Complete (8000 Ft. Altitude-Special)		
		(Kerosene or Distillate - Gasoline)	TCBM 3729 up	4
47640 DR	14	Piston Pin Bushing		4
52750 DAX	15	Connecting Rod, Complete		4
52751 DA	15A	Connecting Rod Cap (Order 52750 DAX)		4
52752 DA	16	Connecting Rod Bearing, Upper (Standard) (Order 52752 DAX)		4
52752 DAX	16	Connecting Rod Bearing, Upper and Lower (Standard)		
		(Will Work for 52752 DA and 62624 D)		4
52757 DA	16	Connecting Rod Bearing, Upper (.030" Under Size) (Order 52757 DAX)		4
52757 DAX	16	Connecting Rod Bearing, Upper and Lower (.030" Undersize)		
		(Will Work for 52757 DA and 62028 D)		4
62028 D	16	Connecting Rod Bearing, Lower (030" Undersize) (Order 52757 DAX)		4

CARBURETED ENGINE

PART NUMBER	REF. NO.	DESCRIPTION	SERIAL NUMBER	NO. REQ'D
62624 D	16	Connecting Rod Bearing, Lower (Standard)(Order 52752 DAX)		4
64361 D	16	Connecting Rod Bearing, Upper (.003" Undersize)(Order 64363 D)		4
64362 D	16	Connecting Rod Bearing, Lower (.003" Undersize)(Order 64363 D)		4
64363 D	16	Connecting Rod Bearing, Upper and Lower (.003" Undersize)		
		(Will Work for 64361 D and 64362 D)		4
52750 DAY	16A	Connecting Rod, 52750 DAX with Bearing, 52752 DAX		4
47629 D	17	Crankshaft Gear (27 Teeth)		1
13055 D	18	Crankshaft Gear Key (Woodruff "B" 5/16 x 1")		1
13055 D	18	Fan Drive Pulley Key (Woodruff "B" 5/16 x 1")(Order 33681 D)	TCBM 501 to 1576	1
33681 D	18	Fan Drive Pulley Key (Woodruff "B" 5/16 x 1" Nickel Steel)		
		(Will Work for 13055 D)	TCBM 1577 up	2
6935 D	20	Starting Crank Ratchet		1
55911 DX	21	Starting Crank, Complete		1
63139 DMX	21	Starting Crank, Complete (Used on Modified Units Adams 75)		1
G 3754	22	Starting Crank Ratchet Pin		1
4253 D	23	Crankshaft Pinion Nut (Not Front Power Take-off Coupling)		1
4254 DA	24	Crankshaft Pinion Nut Lock (Not Front Power Take-off Coupling)		1
6652 DB	25	Fan Drive Pulley (Not Front Power Take-off Coupling)		1
36796 DA	25A	Crankshaft Oil Flinger		1
10319 D	26	Starting Crank Pin		1
		Set Screw, 5/16" x 1/2" N.C. Headless (Cup Point)		1
52818 DX	27	Crankshaft Bearing, Front and Rear (2 Halves)(Standard)		2
52819 DX	27	Crankshaft Bearing, Front and Rear (2 Halves)(.030" Undersize)		2
64364 DX	27	Crankshaft Bearing, Front and Rear (2 Halves)(.003" Undersize)		2
52820 DX	28	Crankshaft Bearing, Center (2 Halves)(Standard)	TCBM 501 to 2141	1
52821 DX	28	Crankshaft Bearing, Center (2 Halves)(.030" Undersize)	TCBM 501 to 2141	1
63382 D	28A	Crankshaft Center Bearing Thrust Washer (Standard or .003" Undersize)		
		(Order 63380 DX or 64365 DX)	TCBM 2142 up	4
63383 D	28A	Crankshaft Center Bearing Thrust Washer (.030" Undersize)		
		(Order 63381 DX)	TCBM 2142 up	4
63380 DX	28B	Crankshaft Bearing, Center (2 Halves with Thrust Washers)		
		(Standard)	TCBM 2142 up	1
63381 DX	28B	Crankshaft Bearing, Center (2 Halves with Thrust Washers)		
		(.030" Undersize)	TCBM 2142 up	1
64365 DX	28B	Crankshaft Bearing, Center (2 Halves with Thrust Washers)		
		(.003" Undersize)	TCBM 2142 up	1
64367 DX	28B	Crankshaft Bearing, Center (2 Halves)(.003" Undersize)	TCBM 501 to 2141	1
52809 DBX	29	Crankshaft with Nut, 4253 D and 2 Dowel Pins, 46923 D (Standard)		1
52826 DBX	29	Crankshaft with Nut, 4253 D and 2 Dowel Pins, 46923 D		
		(.030" Undersize)		1
6526 DAX	30	Flywheel with Ring Gear, 33817 DB		1
9725 DMX	30	Flywheel with Ring Gear, 28173 DA (Used on Modified Units Adams 75)		1
8977 DM	31	Continuous Power Take-off Coupling (Used on Modified Units Adams 75)		1
47628 D	32	Flywheel to Crankshaft Bolt Lock		3
59811 DM	32	Flywheel and Coupling Bolt Lock (Used on Modified Units Adams 75)		3
43832 D	33	Flywheel to Crankshaft Bolt		6
57913 D	33	Flywheel and Coupling Bolt (Used on Modified Units Adams 75)		6

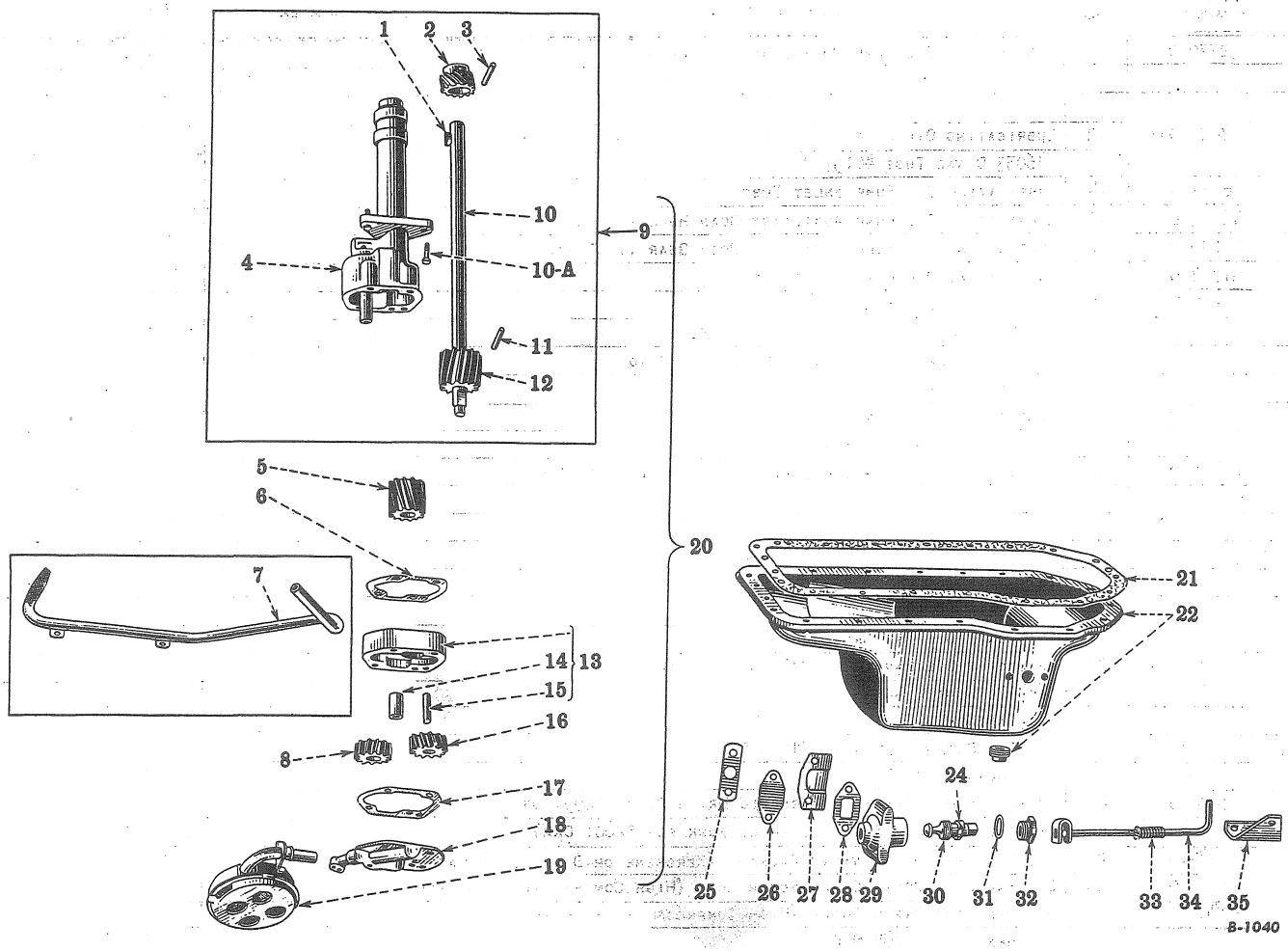

Reference numbers only are shown in illustration. Use I H C part numbers in ordering.
Unnumbered parts in the illustrations are the same as corresponding parts shown with numbers.

CRANKCASE OIL PAN AND LUBRICATING OIL PUMP

13021 D	1	Lubricating Oil Pump Drive Key (Woodruff No. 6-5/32 x 5/8")	2	
46595 DA	2	Lubricating Oil Pump Drive Pinion (12 Teeth)	1	
32316 D	3	Lubricating Oil Pump Drive Pinion Pin	1	
8291 DX	4	Lubricating Oil Pump Body with Idler Shaft	1	
52771 D	5	Lubricating Oil Pump Idler Gear (12 Teeth)	1	
51044 D	6	Lubricating Oil Pump Auxiliary Gear Housing Gasket	1	
52772 DX	7	Oil Return Pipe with Screen	1	
		Cap Screw, 3/8 x 7/8" N.C. Hex. Head	2	
		Lockwasher, 3/8"	2	
51047 D	8	Lubricating Oil Pump Auxiliary Idler Gear (12 Teeth)	1	
8291 DY	9	Lubricating Oil Pump Body, Complete	1	
52769 D	10	Lubricating Oil Pump Drive Shaft	1	
10961 D	10A	Lubricating Oil Pump Body Cap Screw	2	
		Lockwasher, 1/2"	2	
32319 D	11	Lubricating Oil Pump Body Gear Pin	1	

CARBURETED ENGINE

PART NUMBER	REF. NO.	DESCRIPTION	SERIAL NUMBER	NO. REQ'D	
52770 D	12	Lubricating Oil Pump Body Gear (12 Teeth)		1	
8089 DAX	13	Lubricating Oil Pump Auxiliary Gear Housing with Dowel,			
		46053 D and Tube 46157 D		1	
46157 D	14	Lubricating Oil Pump Inlet Tube		1	
46053 D	15	Lubricating Oil Pump Auxiliary Gear Housing Dowel Pin		1	
51046 D	16	Lubricating Oil Pump Auxiliary Body Gear (12 Teeth)		1	
51044 D	17	Lubricating Oil Pump Cover Gasket		1	
8210 D	18	Lubricating Oil Pump Cover		1	
		Cap Screw, 3/8 x 2" N.C. Hex. Head		3	
		Cap Screw, 3/8 x 2-3/4" N.C. Hex. Head		1	
		Lockwasher, 3/8"		4	
56108 D	19	Lubricating Oil Pump Screen, (Floto)		1	
		Cotter Pin, 1/8 x 1-1/4"		1	
61412 D	20	Lubricating Oil Pump, Complete (Less Reference 10-A)		1	
54947 D	21	Crankcase Oil Pan Gasket		1	
52801 DXA	22	Crankcase Oil Pan with 3/4" Square Head Pipe Plug			
		(60478 D Will Work)		1	
		Cap Screw, 3/8 x 1" N.C. Hex. Head		21	
		Cap Screw, 3/8 x 1-1/4" N.C. Hex. Head		2	
		Lockwasher, 3/8"		23	
60478 D	22	Crankcase Oil Pan with Magnetic Drain Plug, 58997 DA			
		(Field Change - Special) (Will Work for 52801 DXA)		1	
31285 D	24	Oil Pan Side Drain Valve Packing (Kerosene or Distillate-Gasoline)		1	
31281 D	25	Oil Pan Side Drain Cover Screw Lock (High Compression-Gasoline)		1	
52806 DX	26	Oil Pan Side Drain Cover (High Compression Gasoline)		1	
		Hex. Nut, 3/8" N.C.		2	
56425 D	27	Oil Pan Side Drain Baffle (Kerosene or Distillate-Gasoline)		1	
52808 D	28	Oil Pan Side Drain Gasket (Kerosene or Distillate-Gasoline)		1	
52808 D	28	Oil Pan Side Drain Cover Gasket (High Compression Gasoline)		1	
31279 D	29	Oil Pan Side Drain Body (Kerosene or Distillate-Gasoline)		1	
		Cap Screw, 3/8 x 3/4" N.C. Hex Head		2	
31283 D	30	Oil Pan Side Drain Valve (Kerosene or Distillate-Gasoline)		1	
31290 D	31	Oil Pan Side Drain Valve Packing Gland Gasket			
		(Kerosene or Distillate-Gasoline)		1	
31284 D	32	Oil Pan Side Drain Valve Packing Gland (Kerosene or Distillate-Gasoline)		1	
31378 D	33	Oil Pan Side Drain Handle Spring (Kerosene or Distillate-Gasoline)		1	
52759 DX	34	Oil Pan Side Drain Handle with Link (Kerosene or Distillate-Gasoline)		1	
		Washer, 13/32" I.D. x 3/4" O.D. x No. 16 Ga.		1	
		Cotter Pin, 3/32 x 7/8"		1	
50359 D	35	Oil Pan Side Drain Handle Bracket (Kerosene or Distillate-Gasoline)		1	
		Cap Screw, 3/8 x 3/4" N.C. Hex. Head		2	
		Lockwasher, 3/8"		2	
58997 DA		Crankcase Oil Pan Magnetic Drain Plug (Field Change - Special)		1	
68252 D		Lubricating Oil Pump Body Capscrew Lockwire			
		(3/32 x 10" Long Soft Iron Wire)		1	

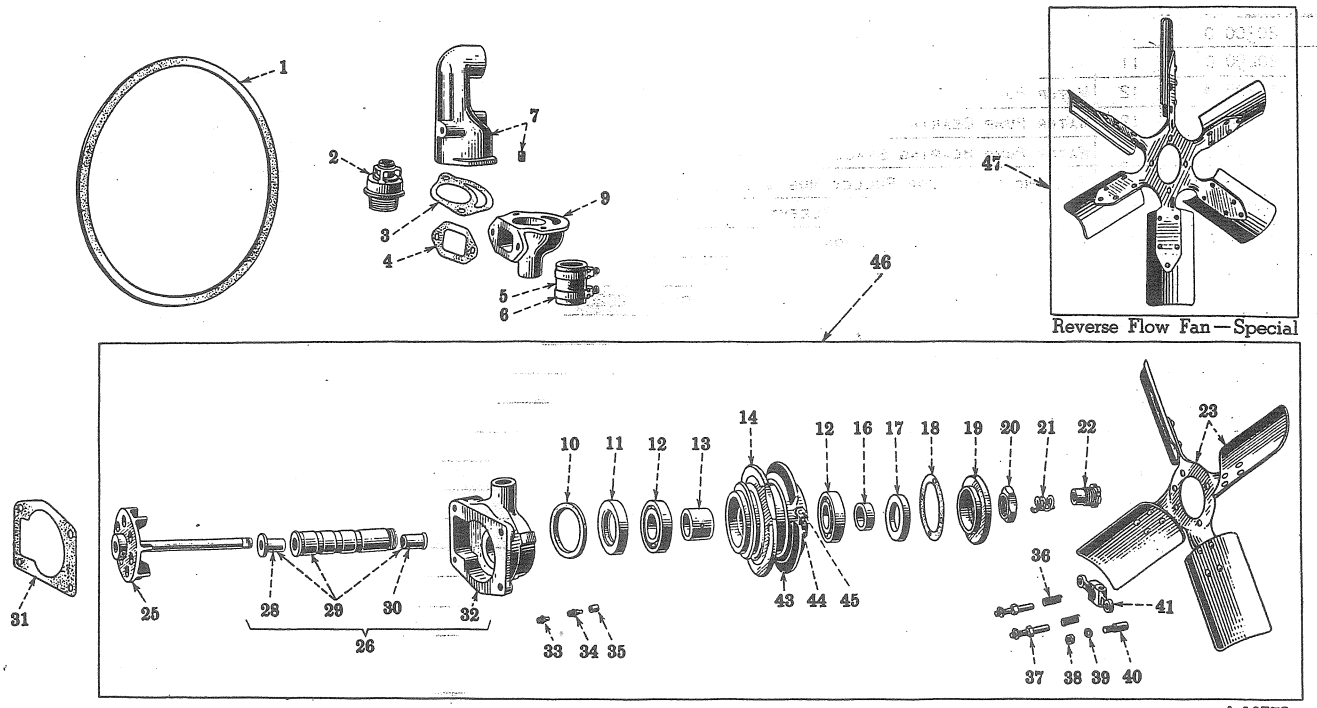

Reference numbers only are shown in illustration. Use I H C part numbers in ordering.
Unnumbered parts in the illustrations are the same as corresponding parts shown with numbers.

FAN, THERMOSTAT AND WATER PUMP

48042 D	1	Fan and Water Pump Belt	1	
33814 D	2	Thermostat (165° - 190°) (Not Low Boiling Point Attachment)		
		(Will Work for 35038 D or 37633 D) (137634 D Will Work)	1	
35032 D	2	Thermostat (130° - 155°) (Low Boiling Point Attachment - Special)		
		(37632 D Will Work)	1	
35033 D	2	Thermostat (150° - 175°) (Order 33814 D or 37634 D)	1	
37632 D	2	Thermostat (130° - 155°) (Low Boiling Point Attachment-Special)		
		(35032 D Will Work)	1	
37633 D	2	Thermostat (150° - 175°) (Order 33814 D or 37634 D)	1	
37633 D	2	Thermostat (150° - 175°) (Used on Modified Unit Adams 75)	1	
37634 D	2	Thermostat (165° - 190°) (Not Low Boiling Point Attachment)		
		(Will Work for 35033 D or 37633 D) (33814 D Will Work)	1	
45984 D	3	Thermostat Housing Gasket	1	
45986 D	4	Water Outlet Elbow Gasket	1	
45985 D	5	Water Pump By-Pass Hose (1-1/2" I.D. x 2-3/8 Long -3 Ply)	1	
91406 HA	6	Thermostat By-Pass Hose Clamp	2	
8313 DAX	7	Thermostat Housing with 1/4" Square Head Pipe Plug	1	
		Cap Screw, 3/8" x 1" N.C. Hex. Head	2	
		Lockwasher, 3/8"	2	
8312 D	9	Water Outlet Elbow (Order 9356 D)	1	
9356 D	9	Water Outlet Elbow (Will Work for 8312 D)	1	
		Cap Screw, 3/8" x 1" N.C. Hex Head	2	
		Lockwasher, 3/8"	2	

CARBURETED ENGINE

GENUINE IHC PARTS

PART NUMBER	REF. NO.	DESCRIPTION	SERIAL NUMBER	NO. REQ'D	
20300 D	10	Water Pump Felt Washer		1	
20290 D	11	Water Pump Oil Seal, Rear		1	
ST 205 A	12	Water Pump Bearing (I.H.C.)(20308 D Will Work)		2	
20308 D	12	Water Pump Bearing (N.D. 3207)(ST 205 A Will Work)		2	
45993 D	13	Water Pump Bearing Spacer		1	
8023 DX	14	Fan and Generator Pulley Hub with Oil Seal, 20290 D		1	
20293 D	16	Water Pump Bearing Lock Sleeve		1	
20289 D	17	Water Pump Oil Seal, Front		1	
21839 D	18	Water Pump Bearing Retainer Gasket		1	
20306 DX	19	Water Pump Bearing Retainer with Oil Seal, 20289 D		1	
20299 D	20	Water Pump Bearing Clamp Nut		1	
50790 D	21	Water Pump Shaft Packing		x	
20296 D	22	Water Pump Packing Gland		1	
21259 D	23	Fan		1	
		Cap Screw, 5/16" x 1" N.C. Hex. Head		2	
		Lockwasher, 5/16"		2	
6518 DAX	25	Water Pump Impeller with Shaft and Thrust Washer		1	
68315 D	26	Water Pump Body with Sleeve, 45982 DX (Will Work for 6586 D)		1	
		Cap Screw, 7/16" x 1-1/4" N.C. Hex. Head		1	
		Cap Screw, 7/16" x 2-1/2" N.C. Hex. Head		3	
		Lockwasher, 7/16"		4	
20303 D	28	Water Pump Shaft Thrust Bushing		1	
45982 DX	29	Water Pump Shaft Sleeve, with Bushings 20303 D and 24017 D		1	
24017 D	30	Water Pump Shaft Bushing		1	
47955 D	31	Water Pump Body Gasket		1	
6586 D	32	Water Pump Body (Order 68315 D)		1	
Q 3615	33	Water Pump Bearing Lubricator (14186 DA Will Work)		1	
14186 DA	33	Water Pump Bearing Lubricator (Q 3615 Will Work)		1	
QA 3628	34	Water Pump Shaft Lubricator with Cap, Q 3659		1	
Q 3659	35	Water Pump Shaft Lubricator Cap		1	

X — As Required

PRINTED IN UNITED STATES OF AMERICA

CARBURETED ENGINE

PART NUMBER	REF. NO.	DESCRIPTION	SERIAL NUMBER	NO. REQ'D
G 3792	36	WATER PUMP DRIVER SPRING		2
20301 D	37	WATER PUMP DRIVING STUD		2
		LOCKWASHER, 5/16"		2
20586 D	40	WATER PUMP DRIVER PIN		1
	39	LOCKWASHER, 5/16"		1
	38	HEX. NUT, 5/16" N.F.		1
20585 D	41	WATER PUMP DRIVER		1
2370 DAX	43	FAN AND WATER PUMP PULLEY FLANGE WITH SET SCREW		
		5/16" x 7/8" N.C. HEADLESS (DOG POINT) AND		
		HEX JAM NUT, 5/16" N.C.		1
55351 D	46	WATER PUMP, COMPLETE, LESS FAN, REF. 23 (*USED ON MODIFIED UNIT ADAMS 75)		1
57041 D	46	FAN AND WATER PUMP, COMPLETE		1
60130 D	47	REVERSE FLOW FAN (*USED ON MODIFIED UNITS BUCYRUS-ERIE NO. 31)		1
		CAP SCREW, 5/16 x 1" N.C. HEX HEAD		2
		LOCKWASHER, 5/16"		2
64071 D		LOW BOILING POINT THERMOSTAT AND HEAD INDICATOR ATTACHMENT - SPECIAL		
		(CONSISTING OF THERMOSTAT, 35032 D OR 37632 D AND HEAT INDICATOR, 63782 D		1
43222 VA		WATER PUMP IMPELLER PIN	TCBM 501 TO 552	1

(*) - FOR TABULATION OF MODIFICATIONS SEE INTRODUCTION PAGE

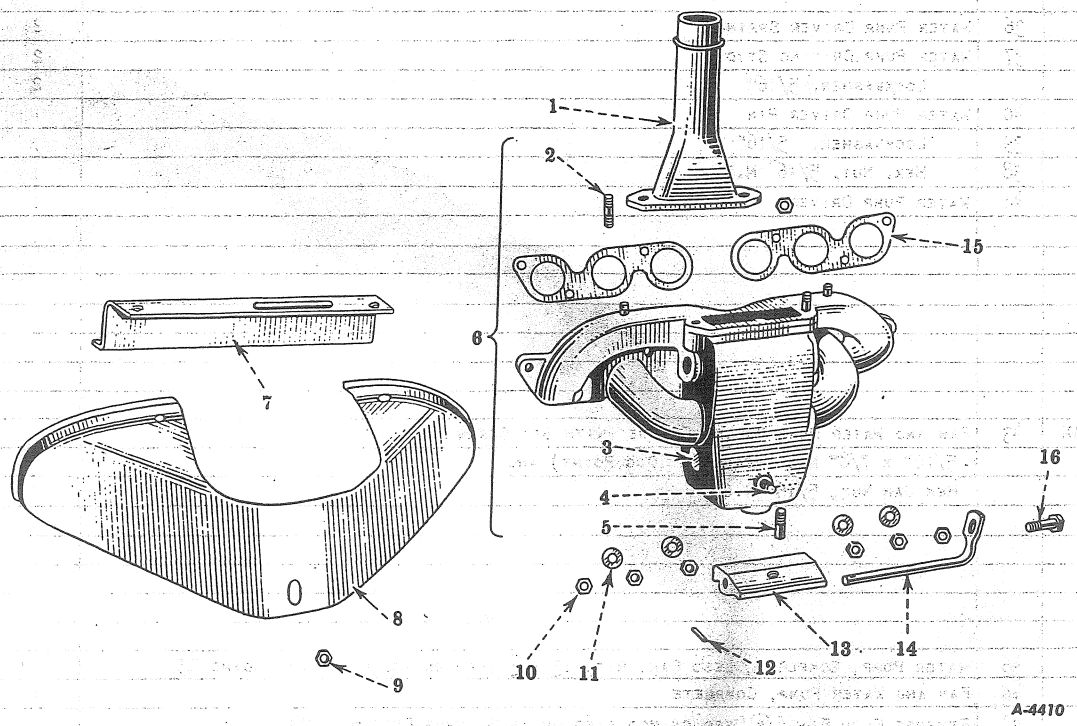

MANIFOLD AND EXHAUST PIPE —KEROSENE OR DISTILLATE—GASOLINE

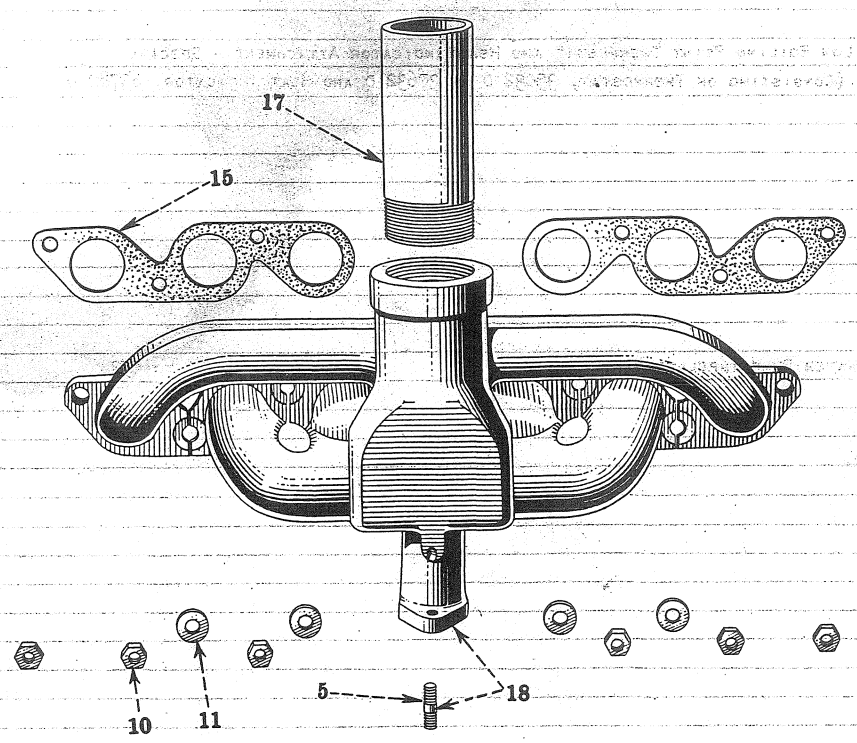

MANIFOLD AND EXHAUST PIPE — HIGH COMPRESSION—GASOLINE

Reference numbers only are shown in illustration. Use I H C part numbers in ordering.

Unnumbered parts in the illustrations are the same as corresponding parts shown with numbers.

PART NUMBER	REF. NO.	DESCRIPTION	SERIAL NUMBER	NO. REQ'D	
		MANIFOLD AND EXHAUST PIPE			
6991 DB	1	Exhaust Pipe (Kerosene or Distillate-Gasoline)		1	
46202 D	2	Exhaust Pipe Stud (Kerosene or Distillate-Gasoline)			
		(Will Work for G-1110)		2	
		Hex Nut, 7/16" N.C.		2	
G 1110	2	Exhaust Pipe Stud (Kerosene or Distillate-Gasoline) (Order 46202 D)		2	
13806 D	3	Manifold Expansion Plug, 1-1/4" (Kerosene or Distillate-Gasoline)		2	
46102 D	4	Manifold Heat Shield Stud (Kerosene or Distillate-Gasoline)		3	
12215 D	5	Carburetor Stud		2	
		Hex. Nut, 3/8" N.F.		2	
		Lockwasher, 3/8"		2	
8290 DAX	6	Exhaust and Intake Manifold, Complete (Kerosene or Distillate -Gasoline)		1	
61113 D	7	Manifold Heat Shield, Inner (Kerosene or Distillate-Gasoline)		1	
52764 D	8	Manifold Heat Shield (Kerosene or Distillate-Gasoline)		1	
63629 DM	8	Manifold Heat Shield (Used on Modified Unit Adams 75)		1	
37684 H	9	Manifold Heat Shield Stud Nut (Kerosene or Distillate-Gasoline)			
		(Order 93082 H)		3	
93082 H	9	Manifold Heat Shield Stud Nut (Kerosene or Distillate-Gasoline)			
		(Will Work for 37684 H)		3	
		Washer, 13/32" I.D. x 3/4" O.D. x No. 16 Ga.		3	
19963 D	10	Manifold to Cylinder Head Stud Nut (Order 64504 D)		6	
64504 D	10	Manifold to Cylinder Head Stud Nut (Will Work for 19963 D)		6	
52823 D	11	Manifold to Cylinder Head Stud Nut Washer		4	
57389 D	12	Manifold Heat Valve Groov Pin, 5/32 x 7/8" (Type No. 1)			
		(Kerosene or Distillate-Gasoline)		1	
8019 DA	13	Manifold Heat Control Valve (Kerosene or Distillate-Gasoline)		1	
49045 DA	14	Manifold Heat Control Valve Shaft (Kerosene or Distillate-Gasoline)		1	
		Set Screw, 3/8 x 1-1/4" N.C. Square Head (Cone Point)			
		(Will Work for 52756 D)		1	
		Hex Jam Nut, 3/8" N.C.		1	
52755 DA	15	Manifold Gasket		2	
52756 D	16	Manifold Heat Control Valve Shaft Adjusting Screw			
		(Kerosene or Distillate-Gasoline) Order Set Screw, 3/8 x 1-1/4" N.C.Square Head			
		(Cone Point)		1	
58095 DA	17	Exhaust Pipe (High Compression Gasoline)		1	
8321 DAX	18	Exhaust and Intake Manifold, Complete (High Compression Gasoline)		1	
8290 DAY		Exhaust and Intake Manifold with Head Valve, Complete			
		(Kerosene or Distillate-Gasoline)		1	

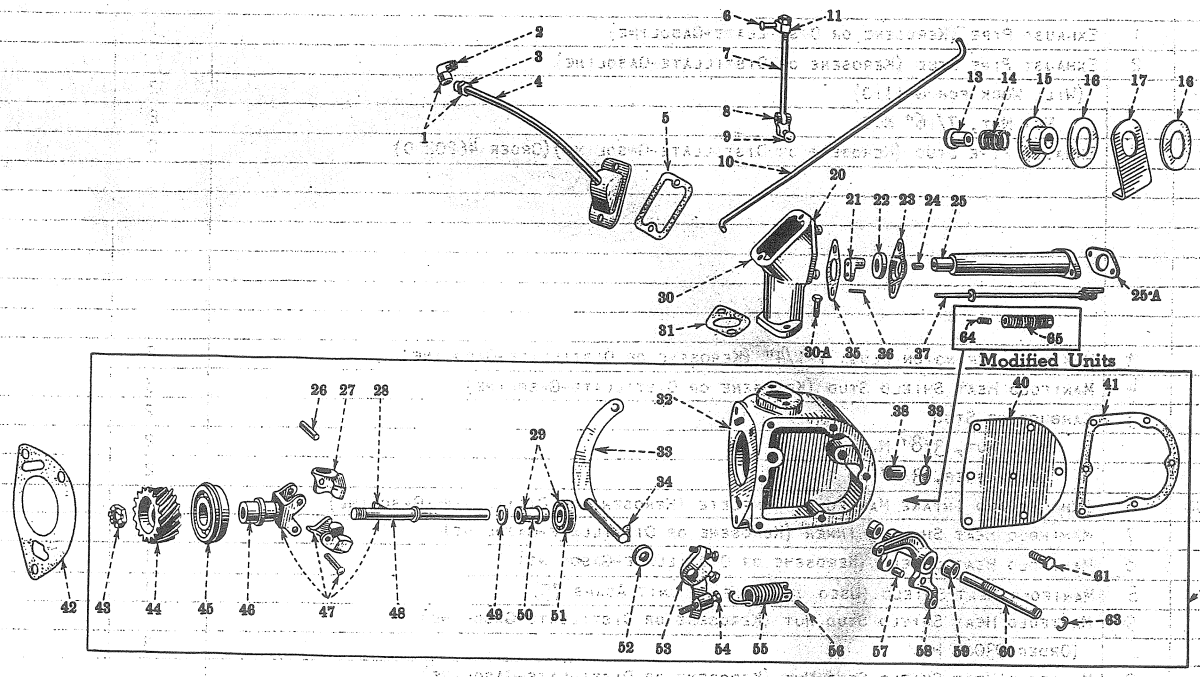

Reference numbers only are shown in illustration. Use I H C part numbers in ordering.

Unnumbered parts in the illustrations are the same as corresponding parts shown with numbers.

GOVERNOR AND CONNECTIONS

37323 DX	1	Governor Breather Tube Elbow with Nut, 37165 D	1	
37323 D	2	Governor Breather Tube Elbow	1	
37165 D	3	Governor Breather Tube Elbow Nut	1	
50366 DX	4	Governor Breather Tube with Cover and Nut, 37165 D	1	
		Screw, 1/4 x 1/2" N.C. Fillister Head	2	
		Lockwasher, 1/4"	2	
48501 D	5	Throttle Lever Cover Gasket	1	
14611 H	6	Throttle Shaft Lever Connecting Pin	1	
		Cotter Pin, 1/16 x 1/2"	1	
52810 DX	7	Throttle Shaft Connecting Rod with Block and Pin, 48496 DA	1	
		Hex. Nut, 1/4" N.F.	1	
48496 DA	8	Throttle Shaft Connecting Rod Pin	1	
14611 H	9	Rockshaft Lever Pin	1	
		Cotter Pin, 1/16 x 1/2"	1	
52813 D	10	Governor Friction Control Rod	1	
		Cotter Pin, 3/32 x 3/4"	2	
		Washer, 11/32" I.D. x 3/4" O.D. x No. 16 Ga.	2	
6289 D	11	Governor Connecting Rod Adjusting Block	1	

CARBURETED ENGINE

PART NUMBER	REF. NO.	DESCRIPTION	SERIAL NUMBER	NO. REQ'D
50248 D	13	Governor Friction Control Spring Retainer		1
		Cap Screw, 1/2 x 2-3/4" N.C. Hex. Head		1
		Hex. Jam Nut, 1/2" N.C.		1
48358 D	14	Governor Friction Control Spring		1
6649 D	15	Governor Friction Control Disc Retainer		1
48356 D	16	Governor Friction Control Disc		2
52812 D	17	Governor Friction Control Bracket		1
25115 D	18	Governor Friction Control Lever Pin		1
8517 DAX	19	Governor Friction Control Lever with Pin, 25115 D		1
53876 D	20	Throttle Shaft Housing Felt Retainer Plate		1
6288 D	21	Throttle Shaft Lever		1
48493 D	22	Throttle Shaft Housing Felt Washer		1
48492 D	23	Throttle Shaft Housing Felt Retainer		1
		Screw, 1/4 x 3/4" N.C. Fillister Head		2
		Lockwasher, 1/4"		2
		Washer, 17/64" I.D. x 5/8" O.D. x No. 18 Ga.		2
45696 D	24	Throttle Shaft Bushing		1
8306 DAX	25	Governor Throttle Shaft Housing with Bushing, 45696 D (9277 DX Will Work)		1
		Screw, 1/4 x 3/4" N.C. Round Head		2
		Lockwasher, 1/4"		2
9277 DX	25	Governor Throttle Shaft Housing with Bushing, 45696 D		
		(8306 DAX will Work)		1
		Screw, 1/4 x 1-1/8" N.C. Round Head		2
		Lockwasher, 1/4"		2
66272 D	25 A	Throttle Shaft Housing to Carburetor Gasket		1
45656 D	26	Governor Weight Pin		2
45655 DA	27	Governor Weight		2
13085 D	28	Governor Gear and Governor Weight Carrier Key (Woodruff No. 7 - 1/8 x 3/4")		1
48250 DX	29	Governor Sleeve with Thrust Bearing, 36151 D		1
8305 D	30	Governor Connecting Rod Housing		1
		Cap Screw, 5/16 x 1" N.C. Hex. Head		1
		Lockwasher, 5/16"		1
10958 D	30 A	Governor Connecting Rod Housing Screw		1
		Lockwasher, 5/16"		1
48489 D	31	Governor Connecting Rod Housing Gasket		1
6634 DD	32	Governor Housing (Order 8363 DBX)		1
8363 DBX	32	Governor Housing, Complete (will Work for 6634 DD)		1
48842 DAX	33	Speed Change Lever with Shaft		1
48245 DX	33	Speed Change Lever with Shaft (Used on Modified Units Adams 75)		1
4167 T	34	Governor Spring Lever Key (Woodruff No. 3 1/8 x 1/2")		1
53877 D	35	Throttle Shaft Housing Felt Retainer Plate Gasket		1
24772 D	36	Throttle Shaft Lever Groov Pin, 3/32 x 1/2" (Type No. 1)		1

CARBURETED ENGINE

PART NUMBER	REF. NO.	DESCRIPTION	SERIAL NUMBER	NO. REQ'D
52811 DXA	37	Throttle Shaft		1
48227 D	38	Governor Housing Bushing		1
13090 D	39	Governor Shaft Opening Expansion Plug, 7/8" (Diameter)		
		(In Governor Housing)		1
49107 D	40	Governor Housing Cover		1
		Cap Screw, 5/16 x 3/4" N.C. Hex. Head		4
		Lockwasher, 5/16"		4
49108 D	41	Governor Housing Cover Gasket		1
45685 D	42	Governor Housing Gasket		1
	43	Follows Reference No. 48		
54970 D	44	Governor Gear (15 Teeth)		1
45774 D	45	Governor Shaft Bearing (N.D. 43305)		1
48256 DA	46	Governor Weight Carrier		1
48256 DAXA	47	Governor Weights with Carrier, Complete		1
48255 D	48	Governor Shaft		1
	43	Slotted Hex. Jam Nut, 9/16" N.F. (Governor Shaft)		1
		Cotter Pin, 1/8 x 1"		1
45653 D	49	Governor Sleeve Thrust Washer		1
48250 D	50	Governor Sleeve		1
36151 D	51	Governor Thrust Bearing (N.D. 202303 A)		1
45667 D	52	Speed Change Shaft Seal		1
6676 DA	53	Governor Spring Lever		1
		Cap Screw, 1/4 x 1" N.C. Hex. Head		2
		Hex. Nut, 1/4" N.C.		2
		Lockwasher, 1/4"		1
49528 D	54	Governor Spring Lever Bolt, Long		1
49407 DAX	55	Governor Spring with Fork		1
48251 D	56	Governor Spring Pin		1
		Cotter Pin, 1/16 x 3/4"		1
48254 D	57	Governor Rockshaft Lever Thrust Pin		2
6633 DBX	58	Governor Rockshaft Lever with 2 Pins, 48254 D		1
45775 D	59	Governor Rockshaft Bearing (Torrington Conn. B-88)		2
48253 DA	60	Governor Rockshaft		1
10958 D	61	Governor Housing Cover Screw		2
		Lockwasher, 5/16"		2
53076 D	62	Variable Speed Governor, Complete (Used on Modified Units Adams 75)		1
54988 D	62	Variable Speed Governor, Complete		1
		Cap Screw, 3/8 x 1-1/4" N.C. Hex. Head		3
		Lockwasher, 3/8"		3
21362 D	63	Governor Rockshaft Snap Ring		1
28078 D	64	Governor Bumper Spring (Used on Modified Units Adams 75)		1
53063 D	65	Governor Bumper Spring Body (Used on Modified Units Adams 75)		1

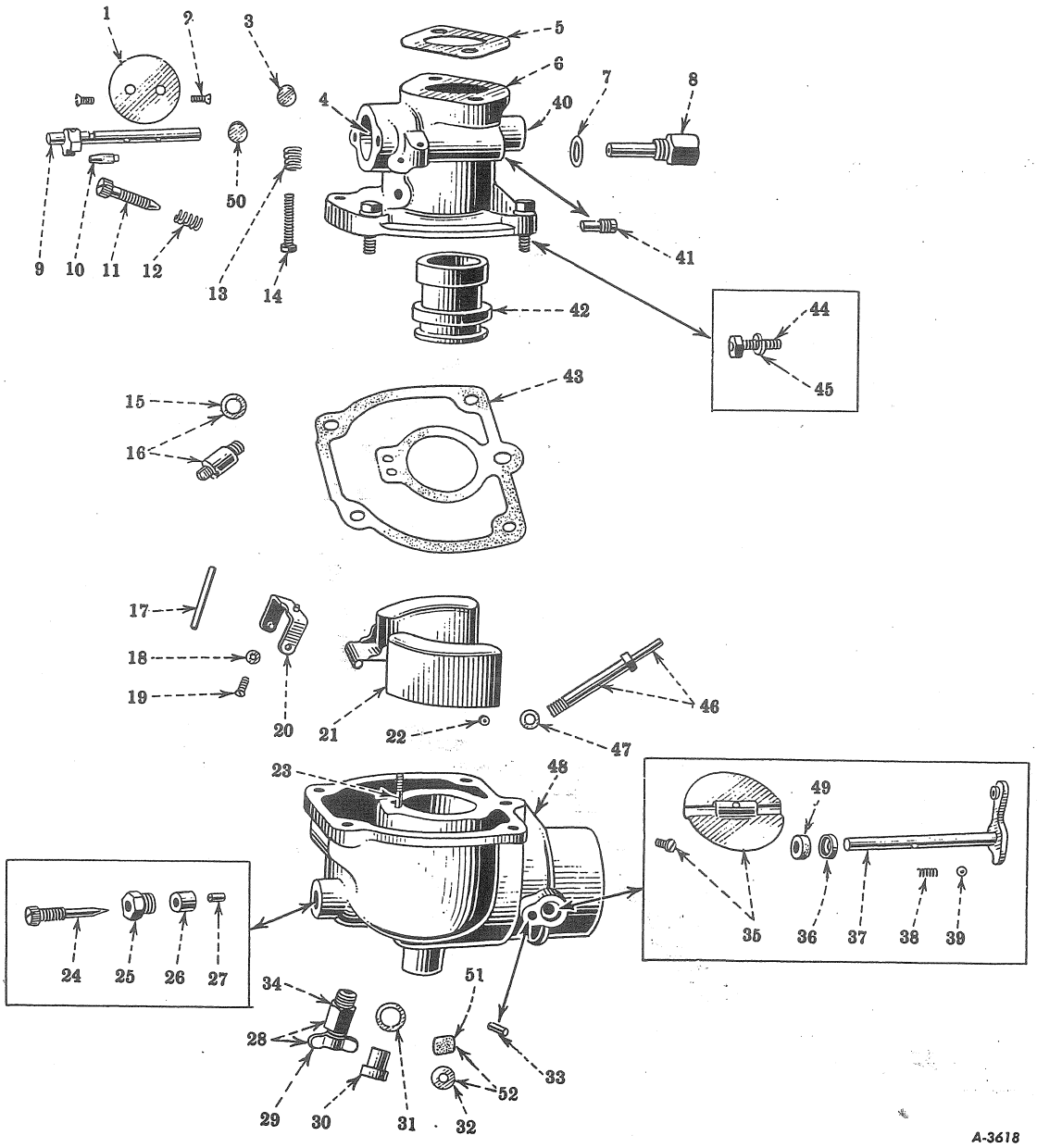

Reference numbers only are shown in illustration. Use I H C part numbers in ordering.

Unnumbered parts in the illustrations are the same as corresponding parts shown with numbers.

CARBURETOR, INTERNATIONAL MODEL E-13 —1⅜" UP-DRAFT

52814 D		Carburetor, Complete (Kerosene or Distillate-Gasoline)	1	
52815 D		Carburetor, Complete (High Compression Gasoline)	1	
54489 D	1	Throttle Butterfly	1	
47392 D	2	Throttle Butterfly Screw	2	
24805 D	3	Throttle Body Expansion Plug, 3/8"	1	
49223 D	4	Throttle Shaft Bushing (Economizer)	1	

CARBURETED ENGINE

PART NUMBER	REF. NO.	DESCRIPTION	SERIAL NUMBER	NO. REQ'D
31336 D	5	Carburetor Gasket		1
8557 DX	6	Throttle Body, Complete		1
18377 D	7	Strainer Screen Retainer Gasket		1
29902 DX	8	Strainer Screen Retainer with Screen		1
54488 DX	9	Throttle Shaft with Stop and Pin		1
45110 D	10	Throttle Stop Pin		1
24689 D	11	Idle Adjusting Screw		1
24685 D	12	Idle Adjustment Retainer Spring		1
25484 D	13	Idle Throttle Adjusting Retainer Spring		1
	14	Screw, No. 10 -32" x 1-1/8" Fillister Head (Cadmium Plated)		1
25948 D	15	Needle Valve Cage Gasket		1
47396 DX-45	16	Needle Valve Cage with Valve and Gasket, 25948 D		1
47395 D	17	Float Lever Pivot		1
47394 D	20	Float Lever Pivot Support		1
	19	Screw, No. 4 - 40 x 5/16" Round Head (Cadmium Plated)		2
	18	Lockwasher, No. 4 (Cadmium Plated)		2
47398 DX	21	Float and Lever		1
35606 D-54	22	Main Air Bleed (Kerosene or Distillate-Gasoline)		1
59173 D	22	Main Air Bleed (High Compression Gasoline)		1
49798 D-70	23	Idle Metering Jet		1
47404 DA	24	Fuel Adjusting Screw		1
24687 DA	25	Fuel Adjusting Screw Packing Nut		1
24703 DA	26	Fuel Adjusting Screw Packing (67266 DX Will Work)		1
67266 DX	26	Fuel Adjusting Screw Packing (24703 DA Will Work)		1
59172 D	27	Fuel Adjusting Screw Seat (High Compression Gasoline)		1
60330 D	27	Fuel Adjusting Screw Seat (Kerosene or Distillate-Gasoline)		1
9983 TB	28	Drain Cock (Kerosene or Distillate-Gasoline)		
		(Consists of Stem, 64536 D and Body, 67942 D)(26407 D Will Work)		1
26407 D	28	Drain Cock (Kerosene or Distillate-Gasoline)(9983 TB Will Work)		1
64536 D	29	Drain Cock Stem (Kerosene or Distillate-Gasoline)		1
47402 D	30	Metering Nozzle Clamp Nut		1
32615 D	31	Metering Nozzle Clamp Nut Gasket		1
57957 D	32	Drip Hole Plug		1
46185 D	33	Groov Pin, 1/8 x 1/2" (Type No. 1)(In Fuel Bowl)		1
67942 D	34	Drain Cock Body (Kerosene or Distillate-Gasoline)		1
47406 DAX	35	Starting Shutter with Machine Screw, No. 6 - 32 x 7/16" Fillister Head		
		(Cadmium Plated)		1
45148 D	36	Dust Seal Retainer		1
47405 DXA	37	Starting Shutter Shaft and Lever		1

CARBURETED ENGINE

PART NUMBER	REF. NO.	DESCRIPTION	SERIAL NUMBER	NO. REQ'D	
46059 D	38	Starting Lever Friction Spring		1	
46184 D	39	Friction Spring Ball (3/16" Diameter)		1	
47390 D	40	Throttle Shaft Bushing		1	
24693 D	41	Idle Outlet Plug		1	
47407 D-30	42	Venturi (High Compression Gasoline) (64987 D-30 Will Work)		1	
47407 D-32	42	Venturi (Kerosene or Distillate-Gasoline) (64987 D-32 Will Work)		1	
64987 D-30	42	Venturi (High Compression Gasoline) (47407 D-30 Will Work)		1	
64987 D-32	42	Venturi (Kerosene or Distillate-Gasoline) (47407 D-32 Will Work)		1	
47388 DA	43	Fuel Bowl Gasket		1	
	44	(Follows Ref. No. 48)			
	45	(Follows Ref. No. 48)			
54485 DX	46	Metering Nozzle with Tip		1	
47401 D	47	Metering Nozzle Gasket		1	
6514 DA	48	Fuel Bowl (Kerosene or Distillate-Gasoline) (Order 57977 D)		1	
8731 D	48	Fuel Bowl (High Compression Gasoline) (Order 59221 D)		1	
57977 D	48	Fuel Bowl, Complete (Kerosene or Distillate-Gasoline)			
		(Will Work for 6514 DA)		1	
	44	Cap Screw, 1/4 x 7/8" N.C. Hex Head (Cadmium Plated)		4	
	45	Lockwasher, 1/4" (Cadmium Plated)		4	
59221 D	48	Fuel Bowl, Complete (High Compression Gasoline)			
		(Will Work for 8731 D)		1	
	44	Cap Screw, 1/4" x 7/8" N.C. Hex. Head (Cadmium Plated)		4	
	45	Lockwasher, 1/4" (Cadmium Plated)		4	
		Pipe Plug, 1/8" Square Head (Cadmium Plated)		1	
45149 D	49	Butterfly Dust Seal		1	
57956 D	50	Throttle Shaft Expansion Plug, 7/16"		1	
27445 DB	51	Drip Hole Filler (Order 60947 D)		1	
60947 D	52	Drip Hole Filler Replacement Package (Consisting of Filler, 27445 DB and Plug 57957 D)		1	

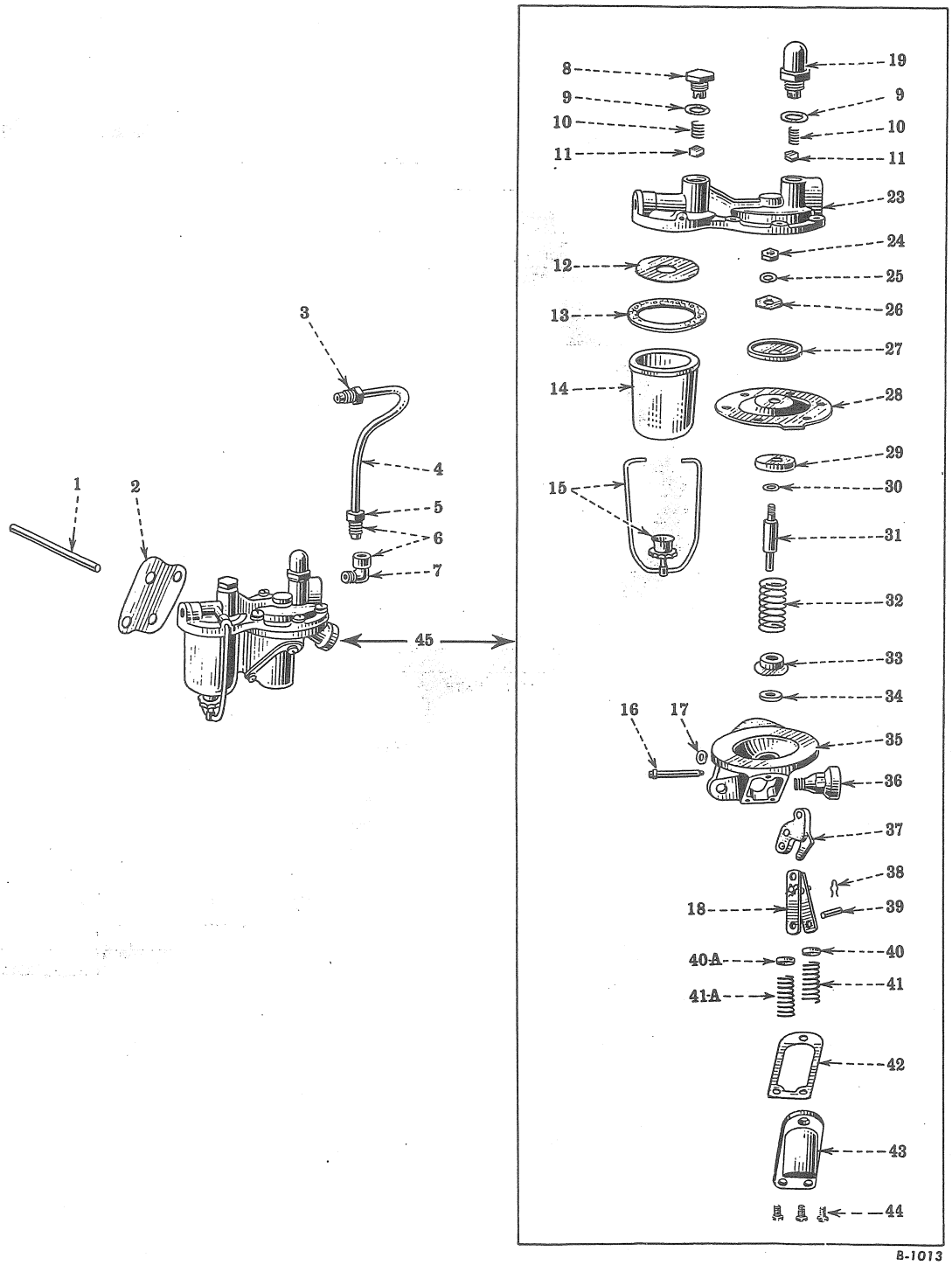

FUEL PUMP AND CONNECTIONS

Reference numbers only are shown in illustration. Use I H C part numbers in ordering.
Unnumbered parts in the illustrations are the same as corresponding parts shown with numbers.

CARBURETED ENGINE

I H C PART NUMBER	REF. NO.	MFR'S. NUMBER	DESCRIPTION	SERIAL NUMBER	NO. REQ'D	
			FUEL PUMP AND CONNECTIONS			
56692 D	1		Fuel Pump Push Rod		1	
24524 D	2		Fuel Pump Gasket		1	
29899 D	3		Connector Nut (on Carburetor)		1	
56693 DAX	4		Fuel Pipe with 2 Nuts, 29899 D (Pump to Carburetor)		1	
29899 D	5		Fuel Pump Elbow Nut		1	
29900 DX	6		Fuel Pump Elbow with Nut, 29899 D		1	
29900 D	7		Fuel Pump Elbow		1	
23525 D	8	855135	Valve Plug		1	
23526 D	9	855136	Valve Plug Gasket		1	
23526 D	9	855136	Air Dome Gasket		1	
26095 D	10	856270	Valve Spring		1	
26095 D	10	856270	Air Dome Valve Spring		1	
23518 D	11	855003	Valve		1	
23518 D	11	855003	Air Dome Valve		1	
23516 D	12	854009	Gas Strainer Screen		1	
51346 VA	13	854003	Strainer Gasket		1	
51344 V	14	854004	Strainer Bowl		1	
51348 VA	15	854054	Strainer Bail		1	
36350 D	16	1521289	Rocker Arm Pin		1	
36351 D	17	1521288	Rocker Arm Pin Washer		1	
23537 D	18	855374	Link		2	
23545 D	19	855789	Air Dome		1	
60129 D	23	1523358	Top Cover and Valve Seat		1	
			Screw, No. 10 - 32 x 5/8" Fillister Head		6	
			Lockwasher, No. 10		6	
	24,25		Follows Reference No. 31			
23522 D	26	855029	Diaphragm Washer		1	
28827 D	27	1521194	Diaphragm Protector, Upper		1	
23523 D	28	855035	Diaphragm		1	
23524 D	29	855078	Diaphragm Protector, Lower		1	
23520 D	30	855012	Pull Rod Gasket		1	
60128 D	31	1523172	Pull Rod		1	
	24		Hex. Jam Nut, 1/4" N.F.		1	
	25		Lockwasher, 1/4"		1	
26097 D	32	856309	Oil Seal Gasket Retainer Spring		1	
25590 D	33	856308	Oil Seal Gasket Retainer		1	
25589 D	34	856307	Oil Seal Gasket		1	
28825 D	35	1521721	Body		1	
39624 HA	36	1521736	Breather		1	
28824 D	37	1521745	Rocker Arm		1	
23521 D	38	855017	Link Pin Clip		4	
23539 D	39	855016	Link Pin		2	
23541 D	40	855532	Diaphragm Spring Cap		1	
23541 D	40A	855532	Rocker Arm Spring Cap		1	
23530 D	41	855253	Diaphragm Spring		1	
23530 D	41A	855253	Rocker Arm Spring		1	
23528 D	42	855229	Bottom Cover Gasket		1	
23527 D	43	855228	Bottom Cover		1	
31760 D	44	132108	Bottom Cover Screw		3	
28659 HA	45	1521676	Fuel Pump (A.C. Spark Plug Co.)		1	
			Cap Screw, 5/16" x 1" N.C. Hex. Head		2	
			Lockwasher, 5/16"		2	

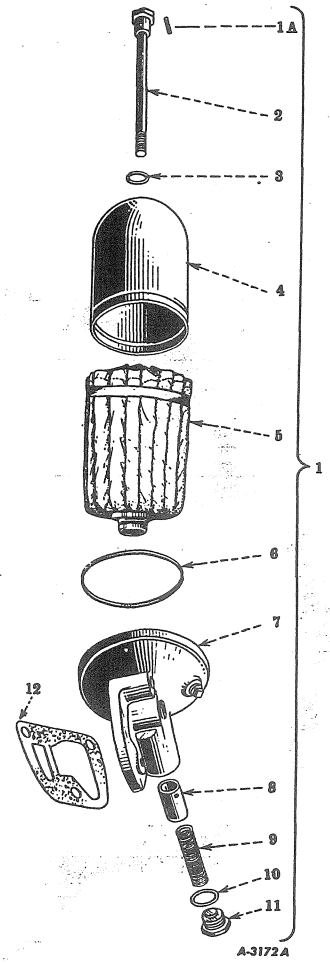

Reference numbers only are shown in illustration.
Use I H C part numbers in ordering.

LUBRICATING OIL FILTER

52773 DB	1	Oil Filter, Complete	1	
G 6579-1/3	1A	Oil Filter Case Retaining Bar Pin	1	
46606 DX	2	Oil Filter Case Retaining Bar with Nut and Pin, G 6579-1/3	1	
13839 D	3	Oil Filter Case Retaining Bar Gasket	1	
13842 D	4	Oil Filter Case	1	
51183 DA	5	Oil Filter Element (Star Shaped Type) (Order 63884 D) TCBM 501 to 1549	1	
53854 DA	5	Oil Filter Element Replacement Package (6 Elements)		
		(Star Shaped Type) (Order 63885 D) TCBM 501 to 1549	1	
63884 D	5	Oil Filter Element (Umbrella Type)		
		(Will Work for 51183 DA) TCBM 1550 up	1	
63885 D	5	Oil Filter Element Replacement Package (6 Elements)		
		(Umbrella Type) (Will Work for 53854 DA) TCBM 1550 up	1	
13841 D	6	Oil Filter Case Gasket	1	
8113 DAX	7	Oil Filter Base with 1/4" Square Head and 3/8" Countersunk Head Pipe Plugs	1	
		Cap Screw, 7/16" x 1-1/2" N.C. Hex. Head	1	
		Cap Screw, 7/16" x 2-1/2" N.C. Hex. Head	2	
		Lockwasher, 7/16"	3	
45285 DA	8	Oil Pressure Regulating Valve	1	
45286 D	9	Oil Pressure Regulating Valve Spring (Will Work for 48695 D)	1	
48695 D	9	Oil Pressure Regulating Valve Spring (Order 45286 D)	1	
28781 D	10	Oil Pressure Regulating Valve Nut Gasket	1	
51205 D	11	Oil Pressure Regulating Valve Nut	1	
51204 D	12	Oil Filter Base Gasket	1	

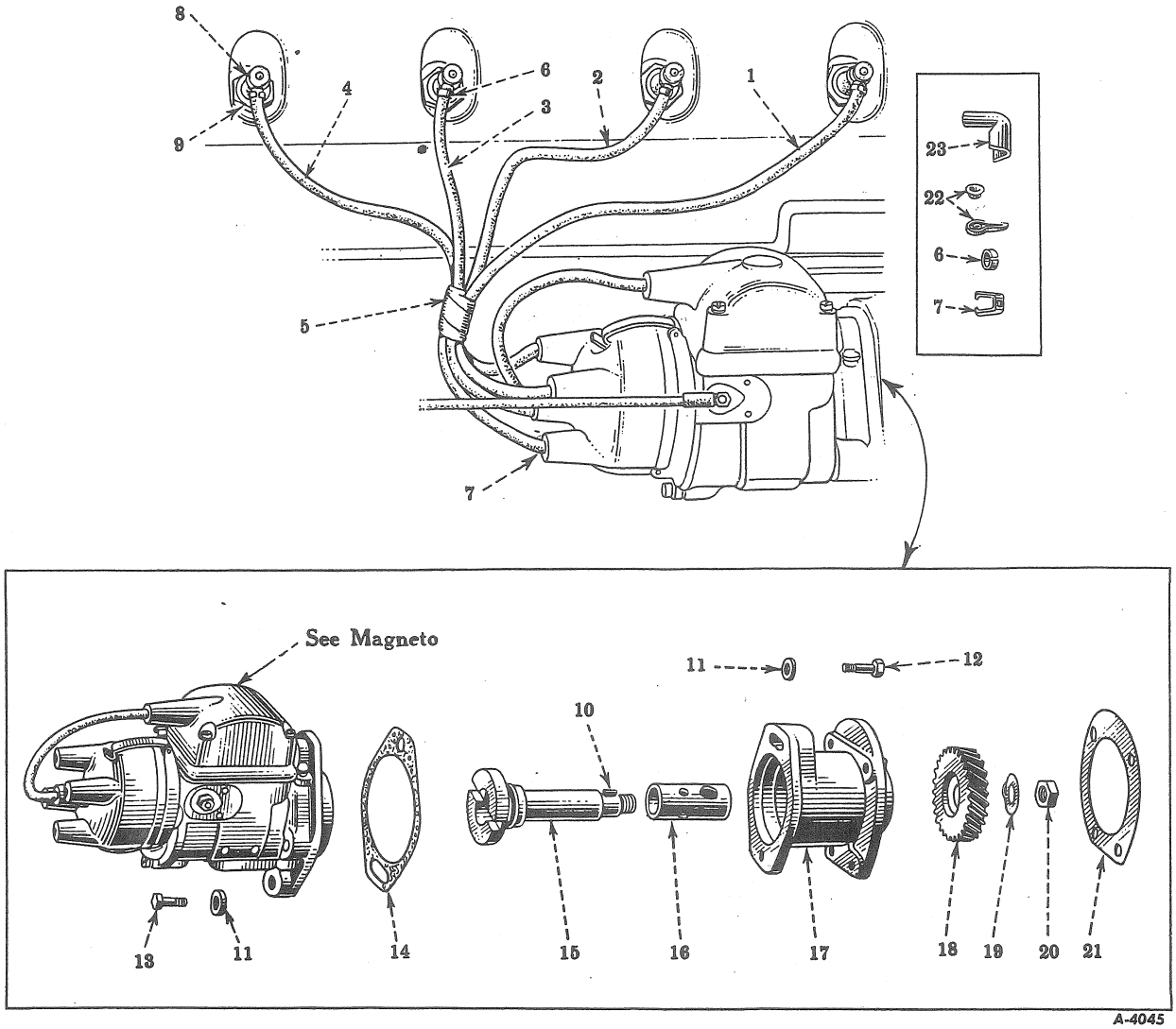

Reference numbers only are shown in illustration. Use I H C part numbers in ordering.
Unnumbered parts in the illustrations are the same as corresponding parts shown with numbers.

SPARK PLUGS, CABLES, MAGNETO DRIVE AND BRACKET

49359 D	1	Spark Plug Cable, No. 1 (Order 65349 D)	TCBM 501 to 3064	1	
65349 D	1	Spark Cable, No. 1 (Will Work for 49359 D)	TCBM 3065 up	1	
30083 D	2	Spark Plug Cable, No. 2 (Order 65343 D)	TCBM 501 to 3064	1	
65343 D	2	Spark Plug Cable, No. 2 (Will Work for 30083 D)	TCBM 3065 up	1	
28589 D	3	Spark Plug Cable, No. 3 (Order 65323 D)	TCBM 501 to 3064	1	
65323 D	3	Spark Plug Cable, No. 3 (Will Work for 28589 D)	TCBM 3065 up	1	
28591 D	4	Spark Plug Cable, No. 4 (Order 65322 D)	TCBM 501 to 3064	1	
65322 D	4	Spark Plug Cable, No. 4 (Will Work for 28591 D)	TCBM 3065 up	1	
52794 D	5	Set of Spark Plug Cables (Order 65359 D)	TCBM 501 to 3064	1	
65359 D	5	Set of Spark Plug Cables (Will Work for 52794 D)	TCBM 3065 up	1	
27618 D	6	Spark Plug Cable Reinforcement	TCBM 501 to 3064	4	
37291 D	7	Spark Plug Cable Terminal (Push Type)		4	

CARBURETED ENGINE

PART NUMBER	REF. NO.	DESCRIPTION	SERIAL NUMBER	NO. REQ'D
36985 DA	8	SPARK PLUG (CHAMPION I COMMERCIAL A) FOR LIGHT OR MODERATE SERVICE		
		(HIGH COMPRESSION GASOLINE OR DISTILLATE-GASOLINE)		
		(ALSO NORMAL SERVICE-KEROSENE OR DISTILLATE-GASOLINE) (61594 DA WILL WORK)		4
59424 DA	8	SPARK PLUG (CHAMPION O COMMERCIAL) (FOR NORMAL, SEVERE OR EXTREMELY		
		SEVERE SERVICE - GAS OR HIGH COMPRESSION GASOLINE)		
		(98681 H WILL WORK FOR NORMAL OR SEVERE SERVICE AND 107047 H FOR		
		EXTREMELY SEVERE SERVICE) (ALSO SEVERE OR EXTREMELY SEVERE SERVICE-		
		KEROSENE OR DISTILLATE-GASOLINE) (98681 H WILL WORK)		4
61594 DA	8	SPARK PLUG (AC 77) (FOR LIGHT OR MODERATE SERVICE - GAS, HIGH COMPRESSION		
		GASOLINE, KEROSENE OR DISTILLATE-GASOLINE) (ALSO NORMAL SERVICE-		
		KEROSENE OR DISTILLATE-GASOLINE) (36985 DA WILL WORK)		4
98681 H	8	SPARK PLUG (AC 75) (FOR NORMAL OR SEVERE SERVICE-GAS OR HIGH COMPRESSION		
		GASOLINE) (ALSO SEVERE OR EXTREMELY SEVERE SERVICE-KEROSENE OR		
		DISTILLATE-GASOLINE) (59424 DA WILL WORK)		4
107047 H	8	SPARK PLUG (AC 73) (FOR EXTREMELY SEVERE SERVICE - GAS OR HIGH COMPRESSION		
		GASOLINE) (59429 DA WILL WORK)		4
3405 H	9	SPARK PLUG GASKET		4
4167 T	10	MAGNETO DRIVE GEAR KEY (WOODRUFF NO. 3 - 1/8 x 1/2")		1
22828 D	11	MAGNETO BOLT WASHER (ORDER 62493 D)		2
24523 D	11	MAGNETO BOLT WASHER (ORDER 62493 D)		2
40433 D	11	MAGNETO BOLT WASHER (ORDER 62493 D)		2
62493 D	11	MAGNETO BOLT WASHER (WILL WORK FOR 22828 D, 24523 D AND 40433 D)		2
	12,13	FOLLOWS REFERENCE NO. 17		
55780 DA	14	MAGNETO FLANGE GASKET		1
45001 D	15	MAGNETO DRIVE SHAFT		1
	20	HEX. JAM NUT, 5/8" N.F.		1
24473 DA	16	MAGNETO DRIVE SHAFT BUSHING		1
8082 DX	17	MAGNETO BRACKET WITH BUSHING, 24473 DA AND 2 WASHERS, 62493 D		1
	12	CAP SCREW, 3/8" x 1-7/8" N.C. HEX. HEAD		1
	13	CAP SCREW, 3/8" x 1-1/2" N.C. HEX. HEAD		1
		CAP SCREW, 3/8" x 1-3/8" N.C. HEX. HEAD		4
		LOCKWASHER, 3/8"		6
51773 DA	18	MAGNETO DRIVE GEAR (27 TEETH)		1
45003 D	19	MAGNETO GEAR NUT LOCK		1
	20	FOLLOWS REFERENCE NO. 15		
51775 D	21	MAGNETO BRACKET GASKET		1
1924 T	22	SPARK PLUG CABLE TERMINAL (RING TYPE)	TCBM 501 TO 3064	4
84319 H	23	SPARK PLUG CABLE TERMINAL (SNAP-ON TYPE)	TCBM 3065 UP	4

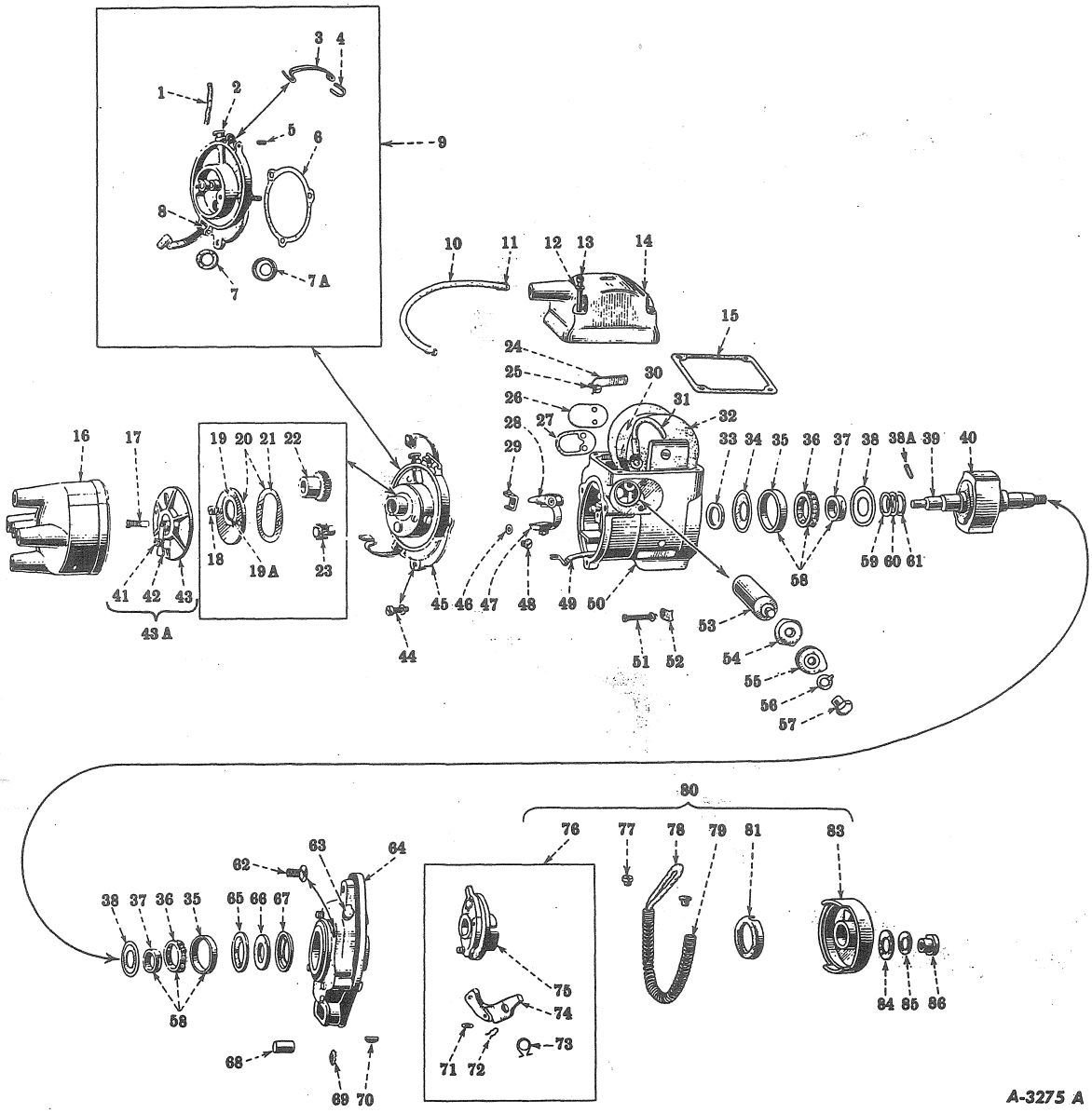

Reference numbers only are shown in illustration. Use I H C part numbers in ordering.
Unnumbered parts in the illustrations are the same as corresponding parts shown with numbers.

MAGNETO, INTERNATIONAL TYPE H-4

53176 DA		MAGNETO, COMPLETE (COUNTERCLOCKWISE)	1	

Always give MAGNETO NUMBER when ordering Parts.

CARBURETED ENGINE

GENUINE IHC PARTS

PART NUMBER	REF. NO.	DESCRIPTION	SERIAL NUMBER	NO. REQ'D
E4 216	1	Oil Well Felt		1
E4 295	2	Oiler		1
51666 D	3	Distributor Cap Spring		2
55855 D	4	Distributor Cap Spring Stop Pin	Magneto 59061 Up	1
47424 D	5	Distributor Cap Locating Pin		1
47408 D	6	Distributor Body Gasket		1
49423 D	7	Distributor Body Felt Seal		1
49424 D	7A	Distributor Body Felt Retainer		1
51667 D	8	Distributor Cap Spring Pin (2 Used-Magneto 501 to 59060)		1
6483 DY	9	Distributor Body, Complete (9411 DX Will Work)		1
9411 DX	9	Distributor Body, Complete (6483 DY Will Work)		1
49125 D	10	Coil to Distributor Cable with 2 Terminals, 37291 D		1
37291 D	11	Coil to Distributor Cable Terminal		2
38609 DA	12	Coil Cover Mounting Washer		4
49791 D	13	Coil Cover Mounting Screw		4
47449 DAY	14	Coil Cover with Secondary Leadout, Complete		1
47453 D	15	Coil Cover Gasket		1
47413 DX	16	Distributor Cap		1
47413 DY	16	Distributor Cap 47413 DX with Brush, 21350 DXA or 32032 DXA		1
21350 DXA	17	Distributor Brush with Spring (32032 DXA Will Work)		1
32032 DXA	17	Distributor Brush with Spring (21350 DXA Will Work)		1
	18	(Follows Ref. No. 20)		
49417 D	19	Distributor Gear Cover Felt Retainer		1
49418 D	19A	Distributor Gear Cover Felt Seal		1
49416 DX	20	Distributor Gear Cover, Complete		1
	18	Machine Screw, No. 8 - 32 x 1/2" Round Head (Cadmium Plated)		2
		Lockwasher, No. 8 (Cadmium Plated)		2
49419 D	21	Distributor Gear Cover Gasket		1
49420 DX	22	Distributor Gear, 24 Teeth		1
47417 DX	23	Rotor Pinion		1
47452 D	24	Secondary Leadout		1
E4A546	25	Secondary Leadout Screw		1
		Lockwasher, No. 4 (Cadmium Plated)		1
55015 D	26	Condenser Hole Cover		1
		Machine Screw, No. 8 - 32 3/8" Round Head (Cadmium Plated)		2
		Lockwasher, No. 8 (Cadmium Plated)		2
48472 D	27	Condenser Hole Cover Gasket	Magneto 45590 Up	1
47431 DB	28	Breaker Arm, Complete		1
21388 DBK	29	Stationary Point Contact Disc and Support, Complete		1

CARBURETED ENGINE

PART NUMBER	REF. NO.	DESCRIPTION	SERIAL NUMBER	NO. REQ'D	
21314 DX	30	Coil Core with 2 Machine Screws, No. 8 - 32 x 5/8" Flat Head		1	
47439 DAX	30	Coil and Core, Complete		1	
57926 DX	30	Coil Complete with End Insulators		1	
47442 D	31	Primary to Condenser Leadout Tube		1	
49593 D	32	Coil End Insulator		2	
E4 226	33	Bearing Felt		1	
47454 D	34	Felt Retainer, Inner		1	
E4A352	35	Rotor Shaft Ball Bearing Outer Race		2	
E4A353	36	Rotor Shaft Ball Bearing Retainer and Balls		2	
E4A351	37	Rotor Shaft Ball Bearing Inner Race		2	
E4A324	38	Oil Flinger		2	
21342 D	38A	Breaker Cam Key		1	
21341 D	39	Breaker Cam	Magneto 501 to 216969	1	
60094 D	39	Breaker Cam	Magneto 216970 Up	1	
49090 DXR	40	Rotor, Complete		1	
47427 D	41	Distributor Rotor Nut		1	
		Lockwasher, No. 6 (Cadmium Plated)		1	
47428 D	42	Distributor Arm		1	
47425 DX	43	Distributor Rotor		1	
47425 DY	43A	Distributor Rotor, Complete		1	
47409 D	44	Distributor Mounting Screw		3	
		Lockwasher, No. 10 (Cadmium Plated)		3	
9411 DY	45	Distributor, Complete (56066 D Will Work)		1	
56066 D	45	Distributor, Complete (9411 DY Will Work)		1	
21394 D	46	Stationary Point Support Washer		1	
47432 D	47	Spring Anchor		1	
		Machine Screw, No. 8 - 32 x 3/8" Flat Head (Cadmium Plated)		1	
		Hex Nut, No. 8 - 32 (Cadmium Plated)		1	
		Lockwasher, No. 8 (Cadmium Plated)		1	
21393 D	48	Stationary Point Support Screw		1	
47433 DX	49	Primary Leadout, Complete		1	
6482 DAY	50	Frame, Complete		1	
48339 D	52	Condenser Clip,		1	
	51	Machine Screw, No. 8 - 32 x 1-1/4" Fillister Head		1	
		Lockwasher, No. 8 (Cadmium Plated)		1	
21409 DB	53	Condenser (Will Work for 47546 D)		1	
47546 D	53	Condenser (Order 21409 DB)		1	
47438 DA	54	Short Circuiting Terminal Inner Washer		1	
48341 D	55	Short Circuiting Terminal Outer Washer		1	

CARBURETED ENGINE

PART NUMBER	REF. NO.	DESCRIPTION	SERIAL NUMBER	NO. REQ'D
48342 DA	56	Short Circuiting Terminal Lockwasher		1
48340 DA	57	Short Circuiting Terminal		1
E4A294	58	Rotor Shaft Ball Bearing (N.D. 15)		2
E4A305	59	Rotor Shim, Light		x
E4 212	60	Rotor Shim, Medium		x
E4A372	61	Rotor Shim, Heavy		x
27311 D	63	Impulse Coupling Oiler		1
6783 DX	64	Mounting Flange, Complete		1
	62	Slotted Screw, 1/4"- 20 x 9/16" Flat Head		4
47474 D	65	Oil Retainer Washer, Inner		1
47475 DA	66	Oil Seal		1
47473 D	67	Oil Retainer Washer, Outer		1
47468 D	68	Impluse Coupling Stop Pin		1
46785 D	69	Mounting Flange Lockwasher (Shakeproof No. 1514)		4
4167 T	70	Rotor Shaft Key (Woodruff No. 3 - 1/8 x 1/2")		1
47461 D	71	Pawl Pin Washer		2
47462 D	72	Pawl Pin Snap Ring		2
54034 D	73	Pawl Spring		2
54033 D	74	Pawl		2
54035 DX	75	Magneto Member		1
54035 DY	76	Magneto Member with Pawls, Complete		1
47465 D	77	Spring End Button		2
47464 D	78	Spring Lubricating Wick		1
47822 D	79	Magneto Coupling Spring		1
54035 DZ	80	Rotating Unit, Complete		1
47294 D	81	Coupling Felt Retainer		1
49093 DX	83	Drive Member		1
24603 D	84	Magneto Member Lockwasher		1
47470 D	86	Impulse Coupling Nut		1
	85	Lockwasher, 1/2" (Cadmium Plated)		1
21372 D		Tube of Magneto Grease (Furnished When Ordered)		1
57314 D		Magnet Keeper		1
57755 D		Breaker Point Gauge		1

Always give MAGNETO NUMBER when ordering Parts.

X - As Required

DIESEL ENGINE

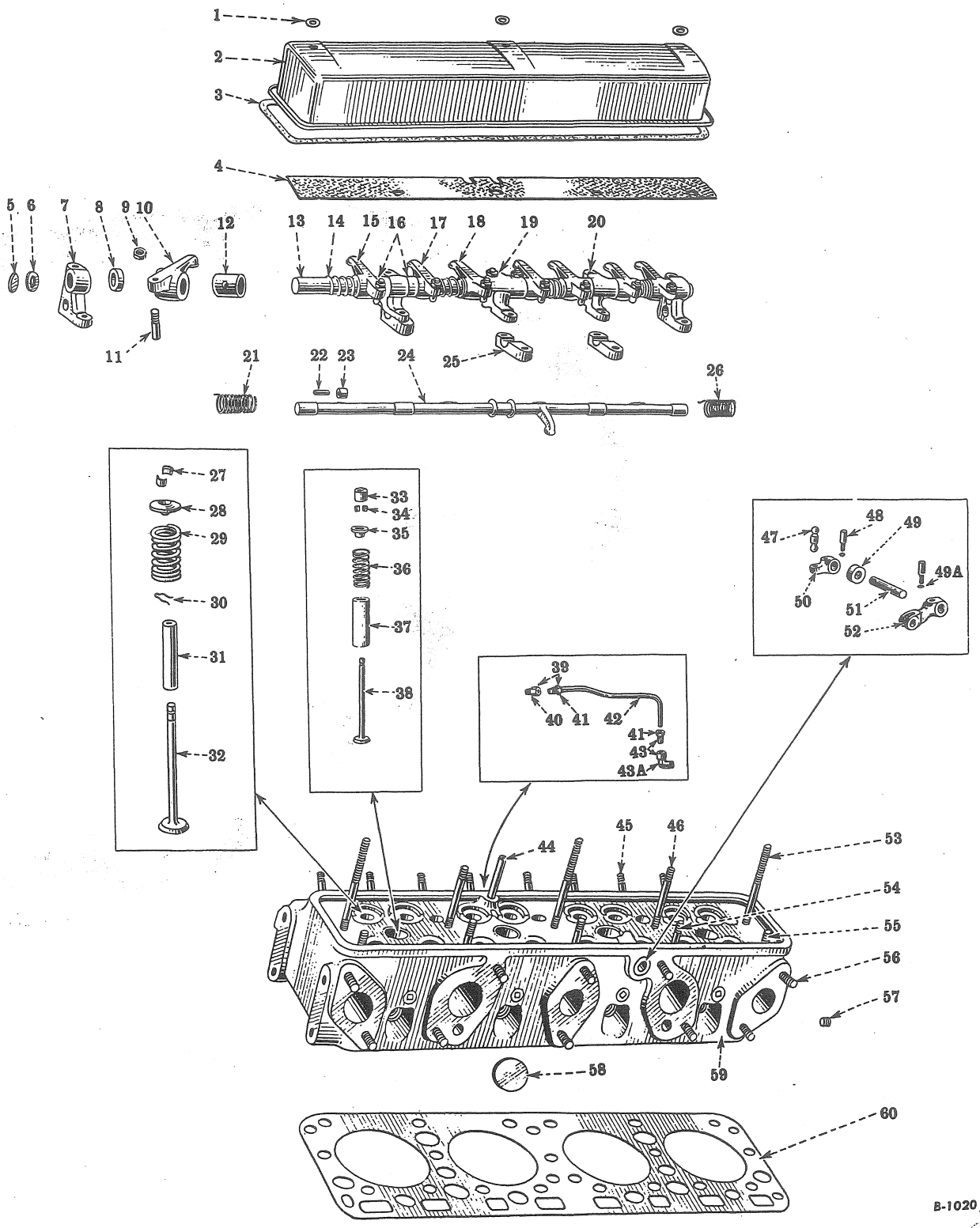

CYLINDER HEAD, VALVE COVER, VALVES AND STARTING VALVE MECHANISM

Reference numbers only are shown in illustration. Use I H C part numbers in ordering.
Unnumbered parts in the illustrations are the same as corresponding parts shown with numbers.

PART NUMBER	REF. NO.	DESCRIPTION	SERIAL NUMBER	NO. REQ'D	
		CYLINDER HEAD, VALVE COVER, VALVES AND STARTING VALVE MECHANISM			
58511 D	1	Valve Cover Stud Nut Washer (Order 62866 D)		3	
62866 D	1	Valve Cover Stud Nut Washer (will work for 58511 D)		3	
51145 DX	2	Valve Cover		1	
51194 D	3	Valve Cover Gasket		1	
51166 D	4	Valve Oiler Pad		1	
27080 H	5	Valve Lever Shaft Expansion Plug, 11/16"		2	
49950 D	6	Valve Lever Shaft Snap Ring		2	
8110 D	7	Valve Lever Bracket, End		2	
51172 D	8	Valve Lever Spacer, Short		2	
38763 H	9	Valve Lever Adjusting Screw Nut		8	
46224 DAX	10	Exhaust Valve Lever, R.H. with Bushing, 46225 DA		2	
16067 D	11	Valve Lever Adjusting Screw		8	
46225 DA	12	Valve Lever Bushing		8	
51171 DX	13	Valve Lever Shaft with Plug, 27080 H		2	
16045 D	14	Valve Lever Spring		4	
46221 DAX	15	Intake Valve Lever, L.H. with Bushing, 46225 DA		2	
48061 D	16	Valve Lever Spacer, Long		4	
46222 DAX	17	Intake Valve Lever, R.H. with Bushing, 46225 DA		2	
46223 DAX	18	Exhaust Valve Lever, L.H. with Bushing, 46225 DA		2	
8112 D	19	Valve Lever Bracket, Center (Upper Half)		1	
		Set Screw, 5/16 x 3/4" N.C. Headless (Cup Point)		2	
		Hex Jam Nut, 5/16" N.C.		2	
8111 D	20	Valve Lever Bracket, Intermediate (Upper Half)		2	
51169 D	21	Starting Valve Shaft Spring, Rear		1	
24917 D	22	Starting Shaft Cam Roller Pin	TDCBM 501 to 2460	4	
24916 D	23	Starting Shaft Cam Roller	TDCBM 501 to 2460	4	
51167 DAX	24	Starting Valve Shaft		1	
8104 D	25	Valve Lever Bracket, Intermediate and Center (Lower Half)		3	
51170 D	26	Starting Valve Shaft Spring, Front		1	
48057 D	27	Valve Spring Seat Key		16	

DIESEL ENGINE

PART NUMBER	REF. NO.	DESCRIPTION	SERIAL NUMBER	NO. REQ'D
48056 DA	28	Valve Spring Seat		8
32483 DA	29	Valve Spring	TDCBM 501 to 3063	8
61808 D	29	Valve Spring	TDCBM 3064 Up	8
48055 D	30	Valve Stem Retainer		8
6608 DR	31	Valve Guide		8
48053 D	32	Intake Valve		4
48054 D	32	Exhaust Valve		4
46210 D	33	Starting Valve Cover		4
46209 D	34	Starting Valve Spring Seat Key		8
46208 D	35	Starting Valve Spring Seat		4
46211 D	36	Starting Valve Spring		4
8744 DR	37	Starting Valve Guide		4
48058 D	38	Starting Valve		4
55999 DX	39	Cylinder Head Breather Pipe Coupling with 2 Nuts, 37165 D		
		(*Used on Modified Units, Adams 86)		1
38026 DMX	39	Breather Tube Connector with Nut, 37165 D		1
38026 DM	40	Breather Tube Connector (Body only)		1
55999 D	40	Breather Tube Connector		
		(*Used on Modified Units Adams 70 and 80)		1
37165 D	41	Breather Tube Connector Nut		2
37165 D	41	Cylinder Head Breather Pipe Elbow Nut		1
55054 DX	42	Breather Tube with 2 Nuts, 37165 D		1
61002 DAMX	42	Breather Tube with 2 Nuts, 37165 D		
		(*Used on Modified Units Adams 70,80 and 86)		1
57736 DX	43	Breather Pipe Elbow with Nut, 37165 D		1
57736 D	43A	Breather Pipe Elbow		1
51197 D	44	Breather Pipe		1

(*) - For Tabulation of Modifications see Introduction Page

PART NUMBER	REF. NO.	DESCRIPTION	SERIAL NUMBER	NO. REQ'D	
54158 D	45	Nozzle Body Retainer Stud		8	
46199 D	46	Valve Lever Intermediate Bracket Stud, Long		2	
		Hex. Nut, 3/8" N.F.		2	
50678 D	47	Starting Valve Shaft Push Rod		1	
42739 DA	48	Starting Valve Operating Shaft Lever Pin		2	
		Hex. Nut, 1/4" N.F.		2	
42746 D	49	Starting Valve Operating Shaft Oil Seal		1	
2853 Y	49A	Starting Valve Operating Shaft Lever Pin Lockwasher			
		(Shakeproof No. 1114)		2	
52020 D	50	Starting Valve Operating Shaft Lever, Inner		1	
51195 D	51	Starting Valve Operating Shaft		1	
51529 D	52	Starting Valve Operating Shaft Lever, Outer		1	
48051 D	53	Valve Lever Center and End Bracket Stud, Long		3	
		Hex. Nut, 3/8" N.F.		6	
46200 D	54	Valve Lever, Center and Intermediate Bracket Stud, Short		3	
		Hex. Nut, 3/8" N.C.		3	
		Lockwasher, 3/8"		3	
32445 D	55	Valve Lever End Bracket Stud, Short		2	
		Hex. Nut, 3/8" N.F.		2	
		Lockwasher, 3/8"		2	
50677 D	56	Manifold Stud		10	
		Hex. Nut, 1/2" N.C.		10	
50410 DA	57	Oil Header Plug, 1/8"		1	
23007 V	58	Cylinder Head Expansion Plug, 1"		2	
8101 DFX	59	Cylinder Head with Studs and Valve Guides		1	
8101 DFY	59	Cylinder Head, 8101 DFX with Valves and Springs		1	
53437 DG	60	Cylinder Head Gasket		1	
68251 D		Starting Valve Shaft Push Rod Lockwire (No. 18 Gauge x 4" Long Soft Iron Wire)			

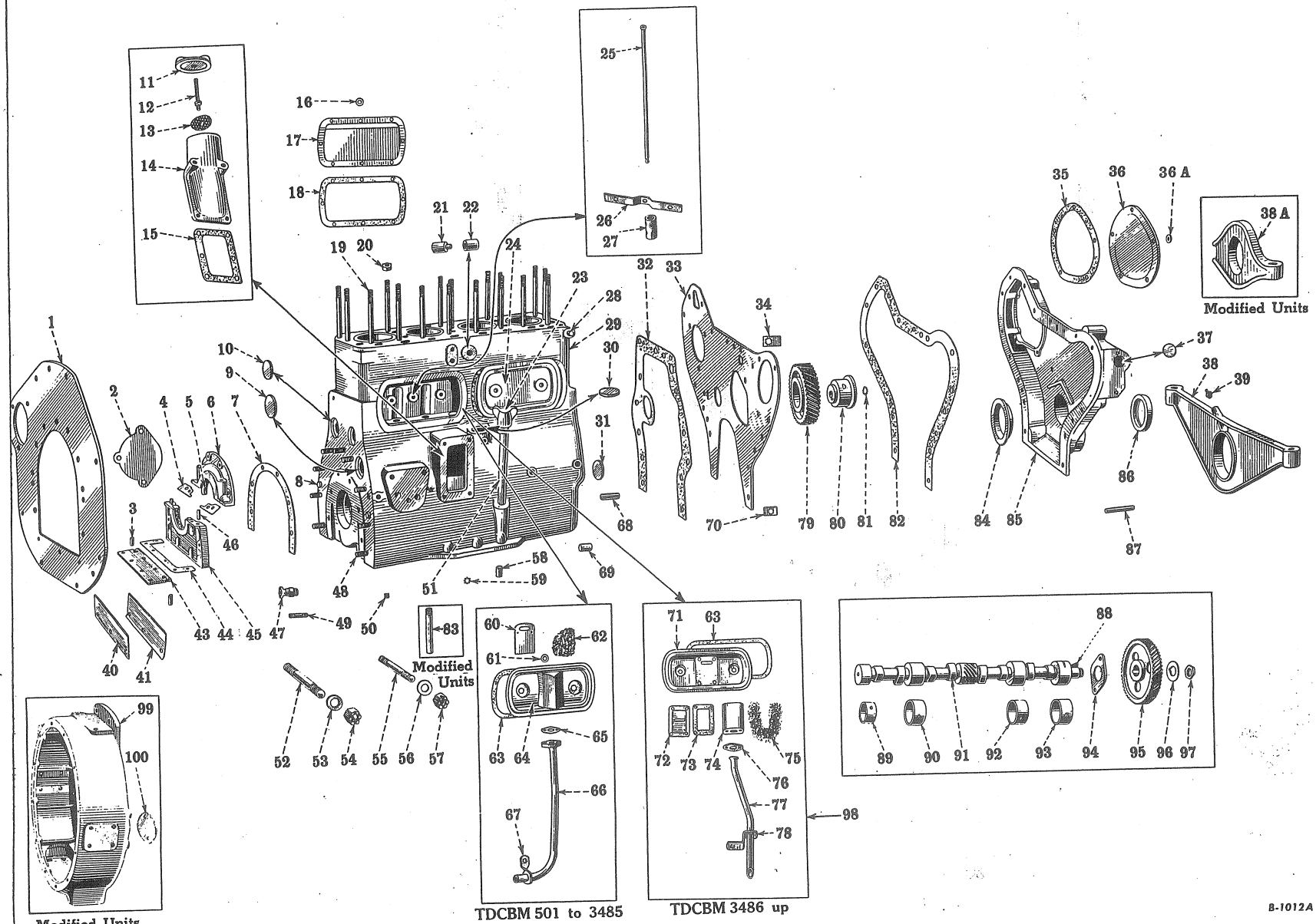

CRANKCASE, FRONT COVER FRONT AND REAR ENGINE SUPPORTS CAMSHAFT AND RELATED PARTS

Reference numbers only are shown in illustrations. Use I H C part numbers in ordering.

Unnumbered parts in the illustrations are the same as corresponding parts shown with numbers.

PART NUMBER	REF. NO.	DESCRIPTION	SERIAL NUMBER	NO. REQ'D	

CRANKCASE, FRONT COVER, FRONT AND REAR ENGINE SUPPORTS, CAMSHAFT AND RELATED PARTS

51336 DX	1	Rear Engine Support		1	
		Cap Screw, 3/8" x 7/8" N.C. Hex. Head		1	
		Cap Screw, 1/2" x 1-1/4" N.C. Hex. Head		6	
		Cap Screw, 5/8" x 2" N.C. Hex. Head		2	
		Lockwasher, 3/8"		1	
		Lockwasher, 1/2"		6	
		Lockwasher, 5/8"		2	
21069 V	2	Starting Motor Pad Cover		1	
		Cap Screw, 3/8" x 5/8" N.C. Hex. Head		2	
		Lockwasher, 3/8"		2	
25093 DA	3	Crankcase Oil Seal Retainer Plate Felt Plug		2	
47696 D	4	Crankshaft Rear Oil Seal Retainer Gasket, Center (Between Halves)		2	
47697 DB	5	Crankshaft Rear Oil Seal Retainer Felt		2	
6533 DA	6	Crankshaft Rear Oil Seal Retainer, Upper (9267 D Will Work)		1	
		Cap Screw, 3/8" x 1-3/8" N.C. Hex. Head		4	
		Cap Screw, 3/8" x 3" N.C. Hex. Head		2	
		Lockwasher, 3/8"		6	
		Washer, 13/32" I.D. x 3/4" O.D. x No. 16 Ga.		6	
9267 D	6	Crankshaft Rear Oil Seal Retainer, Upper (6533 DA Will Work)		1	
		Cap Screw, 3/8" x 1-3/8" N.C. Hex. Head		4	
		Cap Screw, 3/8" x 3" N.C. Hex. Head		2	
		Lockwasher, 3/8"		6	
		Washer, 13/32" I.D. x 3/4" O.D. x No. 16 Ga.		6	
47698 D	7	Crankshaft Rear Oil Seal Retainer Gasket		1	
25086 DA	8	Rear Engine Support Dowel Pin		2	
13439 V	9	Camshaft Rear Bearing Expansion Plug, 2-1/8"		1	
13231 D	10	Crankcase Rear Expansion Plug, 1-3/4"		2	
4819 D	11	Oil Filler Cap		1	
28797 D	12	Oil Filler Cap Stud		1	
		Hex. Nut, 3/8" N.C.		1	
50411 D	13	Oil Filler Screen		1	
8355 D	14	Oil Filler Body		1	
		Cap Screw, 3/8" x 1" N.C. Hex. Head		2	
		Cap Screw, 3/8" x 2-1/2" N.C. Hex. Head		2	
		Lockwasher, 3/8"		4	
42733 D	15	Oil Filler Body Gasket		1	
28950 D	16	Water Header Stud Nut Washer		16	
51313 D	17	Water Header		2	
		Cap Screw, 5/16" x 5/8" N.C. Hex. Head		16	
51316 D	18	Water Header Gasket		2	
47981 D	19	Cylinder Head Stud		18	
32888 D	20	Cylinder Head Stud Nut		18	
51329 D	21	Friction Control Disc Pin	TDCBM 501 to 9873	1	
50827 D	22	Cross Shaft Bushing		2	
51201 DX	23	Oil Level Gauge		1	
51202 DX	23	Oil Level Gauge (*Used on Modified Units Adams 70,80 and 86)		1	
51324 D	24	Push Rod Chamber Side Plate, Front		1	
		Cap Screw, 3/8" x 1-1/8" N.C. Hex. Head		2	
47933 DX	25	Valve Push Rod		8	
		* - For Tabulation of Modifications see Introduction Page			

(Revised 2-'46)

DIESEL ENGINE

PART NUMBER	REF. NO.	DESCRIPTION	SERIAL NUMBER	NO. REQ'D
51790 D	26	Valve Tappet, Stop		2
		Cap Screw, 3/8" x 5/8" N.C. Hex. Head		2
		Lockwasher, 3/8"		2
50951 D	27	Valve Tappet		8
50826 D	28	Cross Shaft Return Spring Pin		1
8124 DFX	29	Crankcase with Studs and Camshaft Bearings, Complete		
		(Order 8124 DGX Together with Center Bearing, 63299 DX and Fuel		
		Filter Base, 8222 DAX)	TDCBM 501 to 5289	1
8124 DGX	29	Crankcase with Studs and Camshaft Bearings, Complete	TDCBM 5290 Up	1
8124 DFZ	29	Crankcase, 8124 DFX with Cylinder Sleeves and Aluminum Pistons, Complete		
		(Order 8124 DGZ or 68669 D Together with Center Bearing,		
		63299 DX and Fuel Filter Base, 8222 DAX)	TDCBM 501 to 5289	1
8124 DGZ	29	Crankcase, 8124 DGX with Cylinder Sleeves and Aluminum Pistons, Complete		
		(68669 D Will Work)	TDCBM 5290 up	1
68669 D	29	Crankcase, 8124 DGX with Cylinder Sleeves and Grey Iron Pistons, Complete		
		(8124 DGZ Will Work)	TDCBM 5290 up	1
29565 D	30	Crankcase Distributor Hole Expansion Plug, 1-7/8"		1
13231 D	31	Crankcase Front Expansion Plug, 1-3/4"		2
51310 D	32	Crankcase Front Plate Gasket		1
51309 DAR	33	Crankcase Front Plate (Order 64479 DXA)	TDCBM 501 to 7949	1
64479 DXA	33	Crankcase Front Plate, Complete Will Work for 51309 DX	TDCBM 7950 up	1
		Cap Screw, 3/8 x 7/8" N.C. Hex Head		4
46250 D	34	Crankcase Front Plate Cap Screw Lock		3
			TDCBM 501 to 7949	1
48143 D	35	Fuel Pump Gear Cover Gasket		1
48142 D	36	Fuel Pump Gear Cover		1
		Cap Screw, 5/16" x 1/2" N.C. Hex. Head		6
		Lockwasher, 5/16"		6
28950 D	36A	Fuel Pump Gear Cover Cap Screw Washer		6
13806 D	37	Front Cover Hour Meter Pad Expansion Plug, 1-1/4" (Not Hour Meter)		1
48296 D	38	Front Engine Support		1
		Cap Screw, 1/2" x 2-3/4" N.F. Hex. Head		2
		Hex. Nut, 1/2" N.F.		2
		Lockwasher, 1/2"		2
8553 D	38A	Front Engine Support (*Used on Modified Units Adams 70,80 and 86)		1
Q 3615	39	Front Engine Support Lubricator		1
46137 D	40	Crankcase Rear Dust Seal Gasket		1

(*) - For Tabulation of Modifications see Introduction Page

DIESEL ENGINE

PART NUMBER	REF. NO.	DESCRIPTION	SERIAL NUMBER	NO. REQ'D	
46136 D	41	Crankcase Rear Dust Seal		1	
		Cap Screw, 3/8" x 5/8" N.F. Hex. Head		3	
		Lockwasher, 3/8"		3	
51311 D	43	Crankcase Oil Seal Retainer Plate		1	
		Cap Screw, 3/8" x 1" N.C. Hex. Head		4	
		Lockwasher, 3/8"		4	
51312 D	44	Crankcase Oil Seal Retainer Plate Gasket		1	
6534 DAX	45	Crankshaft Rear Oil Seal Retainer, Lower with 2 Dowel Pins, 25076 D			
		(9268 DX Will Work)		1	
		Cap Screw, 3/8 x 1-3/8" N.C. Hex Head		2	
		Lockwasher, 3/8"		2	
		Washer, 13/32" I.D. x 3/4" O.D. x No. 16 Gauge		2	
9268 DX	45	Crankshaft Rear Oil Seal Retainer, Lower with 2 Dowel Pins, 25076 D			
		(6534 DAX Will Work)		1	
25076 D	46	Crankshaft Rear Oil Seal Retainer Dowel Pin		2	
31729 D	47	Crankcase Water Drain Cock		1	
49952 D	48	Rear Engine Support Stud (⊛ Used on Modified Units Adams 70,80 and 86)		9	
53560 D	48	Rear Engine Support Stud		9	
		Hex. Nut, 5/8" N.F.		9	
		Lockwasher, 5/8"		9	
53643 D	49	Cross Shaft Latch Bracket Stud		1	
		Hex. Nut, 3/8" N.F.		1	
		Lockwasher, 3/8"		1	
50410 DA	50	Oil Header Plug		6	
48262 D	51	Oil Level Gauge Sleeve (⊛ Used on Modified Units Adams 70,80 and 86)		1	
51325 D	51	Oil Level Gauge Sleeve		1	
43113 D	52	Crankshaft Bearing Cap Stud, Front, Intermediate and Rear		8	
39422 D	53	Crankshaft Bearing Cap Stud Nut Washer, Front, Intermediate and Rear		8	
39423 D	54	Crankshaft Bearing Cap Stud Nut, Front, Intermediate and Rear		8	
		Cotter Pin, 1/8" x 1-3/8"		8	
47840 D	55	Crankshaft Bearing Cap Stud, Center		4	
46246 D	56	Crankshaft Bearing Cap Stud Nut Washer, Center		4	
43598 V	57	Crankshaft Bearing Cap Stud Nut, Center		4	
		Cotter Pin, 1/8" x 1-3/8"		4	
52606 D	58	Crankcase Locating Hole Plug (Order No. 6 Standard Cork			
		No. 2 x Grade 9/16 x 3/4 x 15/16" Long)		2	
13897 D	59	Crankcase Distributor Hole Lockwasher (Shakeproof No. 1118)			
		(Will Work for 22891 D)		1	
		Cap Screw, 5/16" x 5/8" N.C. Hex. Head		1	
22891 D	59	Crankcase Distributor Hole Lockwasher (Order 13897 D)		1	
46696 DX	60	Breather Baffle	TDCBM 501 to 3485	1	
		Machine Screw, No. 8 - 32 x 3/8" Round Head		2	
		Lockwasher, No. 8		2	
		⊛ - For Tabulation of Modifications see Introduction Page			

(Revised 2-'46)

PART NUMBER	REF. NO.	DESCRIPTION	SERIAL NUMBER	NO. REQ'D
58511 D	61	Push Rod Chamber Side Plate Bolt Washer (Order 62866 D)		4
62866 D	61	Push Rod Chamber Side Plate Bolt Washer (Will Work for 58511 D)		4
50975 D	62	Breather Elememt	TDCBM 501 to 3485	1
47984 D	63	Push Rod Chamber Side Plate Gasket		2
51326 DX	64	Push Rod Chamber Side Plate, Rear (Order 59531 D)	TDCBM 501 to 3485	1
		Cap Screw, 3/8" x 1-1/8" N.C. Hex. Head		2
46700 D	65	Breather Pipe Flange Gasket	TDCBM 501 to 3485	1
51327 DX	66	Breather Pipe	TDCBM 501 to 3485	1
		Cap Screw, 5/16" x 3/4" N.F. Hex. Head		2
		Lockwasher, 5/16"		2
51328 D	67	Breather Pipe Clip	TDCBM 501 to 3485	1
52605 D	68	Crankcase Front Plate and Cover Dowel Pin		2
63282 D	69	Crankshaft Center Bearing Dowel Pin	TDCBM 5290 up	2
46251 D	70	Crankcase Front Plate Cap Screw Lock		4
59488 D	71	Push Rod Chamber Side Plate, Rear	TDCBM 3486 Up	1
		Cap Screw, 3/8" x 1-1/8" N.C. Hex. Head		2
59480 D	72	Breather Baffle	TDCBM 3486 Up	1
59481 D	73	Breather Body Gasket	TDCBM 3486 Up	1
8959 D	74	Breather Body (9258 D Will Work)	TDCBM 3486 Up	1
		Machine Screw, No. 10 - 24 x 1/2" N.C. Round Head		4
		Lockwasher, No. 10		4
9258 D	74	Breather Body (8959 D Will Work)	TDCBM 3486 Up	1
		Machine Screw, No. 10 - 24 x 1/2" N.C. Round Head		4
		Lockwasher, No. 10		4
59482 D	75	Breather Element	TDCBM 3486 Up	1
59484 D	76	Breather Pipe Flange	TDCBM 3486 Up	1
		Cap Screw, 5/16" x 7/8" N.C. Hex. Head		2
		Lockwasher, 5/16"		2
59486 D	77	Breather Pipe	TDCBM 3486 Up	1
59487 D	78	Breather Pipe Clip	TDCBM 3486 Up	1
8121 DX	79	Idler Gear with Bushing (41 Teeth)		1

DIESEL ENGINE

PART NUMBER	REF. NO.	DESCRIPTION	SERIAL NUMBER	NO. REQ'D	
6392 DX	80	Idler Gear Shaft with Dowel Pin		1	
		Cap Screw, 1/2" x 1-1/2" N.C. Hex. Head		1	
18868 D	81	Idler Gear Shaft Capscrew Lockwasher			
		(Order 41634 H)	TDCBM 501 to 3062	1	
41634 H	81	Idler Gear Shaft Capscrew Lockwasher (Shakeproof No. 1224)			
		(Will Work for 18868 D)	TDCBM 3063 Up	1	
48139 DA	82	Crankcase Front Cover Gasket		1	
51203 DA	83	Oil Level Gauge Pipe (*Used on Modified Units Adams 70,80 and 86)		1	
46129 D	84	Crankshaft Front Oil Deflector		1	
6623 DAX	85	Crankcase Front Cover, Complete		1	
		Cap Screw, 3/8" x 1" N.C. Hex. Head		4	
		Cap Screw, 3/8" x 1-3/8" N.C. Hex. Head		9	
		Lockwasher, 3/8"		13	
53872 D	86	Crankshaft Front Oil Seal		1	
48138 D	87	Timing Pointer		1	
7235 T	88	Camshaft Gear Key (Woodruff "A" 1/4 x 7/8")		1	
51308 DAR	89	Camshaft Bearing, Rear		1	
51307 DAR	90	Camshaft Bearing, No. 3		1	
50950 D	91	Camshaft		1	
51306 DAR	92	Camshaft Bearing, No. 2		1	
51305 DAR	93	Camshaft Bearing, Front		1	
50948 DA	94	Camshaft Thrust Plate		1	
		Cap Screw, 3/8" x 7/8" N.C. Hex. Head		2	
		Lockwasher, 3/8"		2	
50949 D	95	Camshaft Gear (54 Teeth)		1	
16025 D	96	Camshaft Gear Nut Lock		1	
24569 D	97	Camshaft Gear Nut		1	
59531 D	98	Side Plate and Breather, Complete (Will Work for 51326 DX)	TDCBM 501 to 3485	1	
8554 D	99	Flywheel Housing (*Used on Modified Units Adams 70,80 and 86)		1	
25063 DA	100	Clutch Pilot Bearing Lubricator Cover			
		(*Used on Modified Units Adams 70,80 and 86)		1	
48117 D		Front Engine Support Shim, Heavy (Order 48384 D)		2	
48118 D		Front Engine Support Shim, Light (Order 48385 D)		x	
48384 D		Front Engine Support Shim, Heavy (Will Work for 48117 D)		2	
48385 D		Front Engine Support Shim, Light (Will Work for 48118 D)		x	

(*) - For Tabulation of Modifications see Introduction Page

X - As Required

(Revised 2-'46)

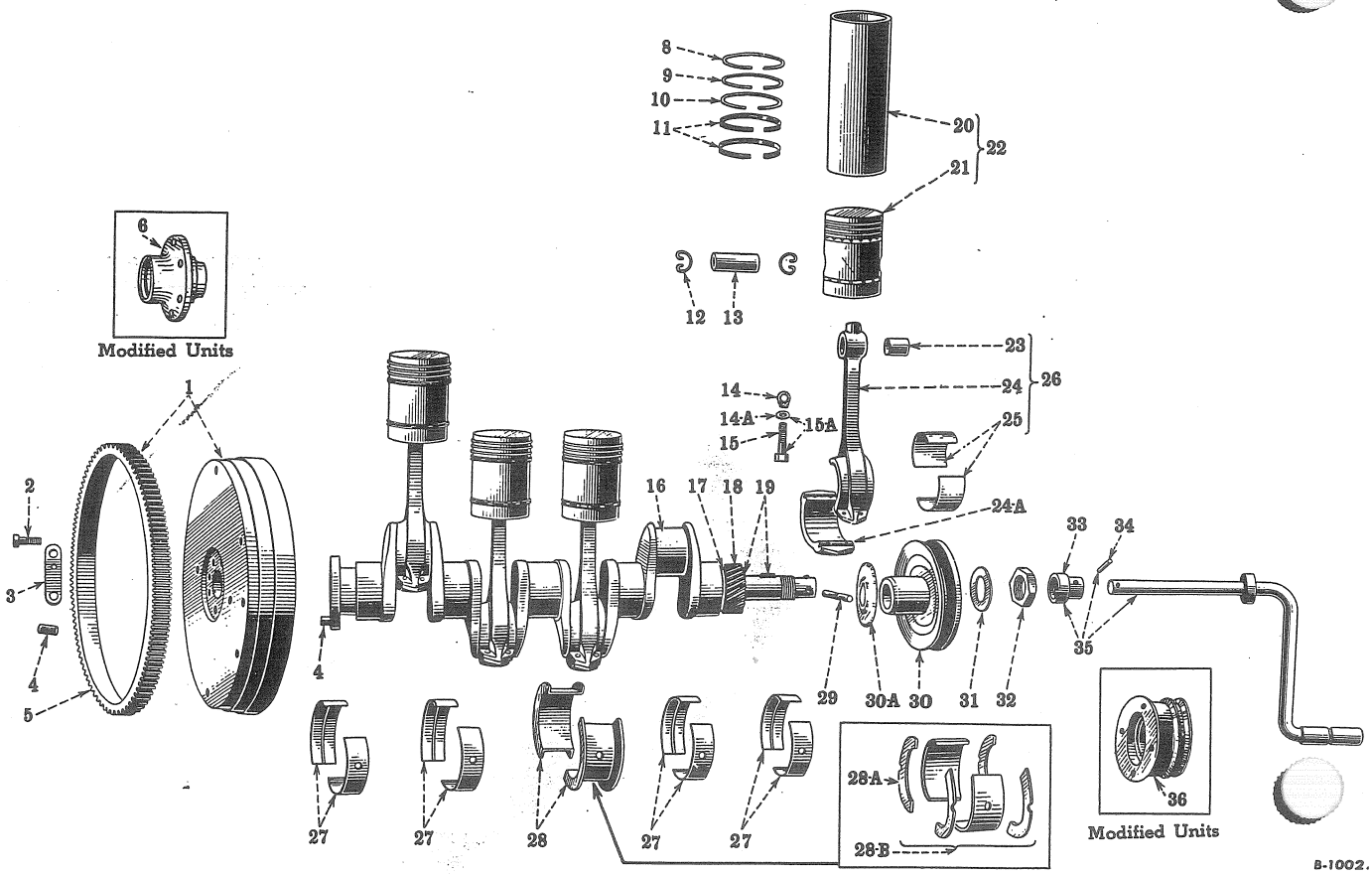

Reference numbers only are shown in illustration. Use I H C part numbers in ordering.
Unnumbered parts in the illustrations are the same as corresponding parts shown with numbers.

CRANKSHAFT AND RELATED PARTS, CONNECTING RODS, PISTONS, CYLINDER SLEEVES, DRIVE PULLEY, STARTING CRANK AND FLYWHEEL

6526 DAX	1	Flywheel with Ring Gear, 33817 DB	1	
8398 DX	1	Flywheel with Ring Gear, 28173 DA and Plug, 32331 D		
		(Order 9725 DMX) (⊛ Used on Modified Units Adams 70 and 80)	1	
9725 DMX	1	Flywheel with Ring Gear, 28173 DA		
		(Used on Modified Units Adams 70 and 80)	1	
9690 DMX	1	Flywheel with Ring Gear, 28173 DA (⊛ Used on Modified Units Adams 86)	1	
43832 D	2	Flywheel Bolt	6	
57913 D	2	Flywheel Bolt (⊛ Used on Modified Units Adams 70, 80 and 86)	6	
47628 D	3	Flywheel Bolt Lock	3	
59811 DM	3	Flywheel and Coupling Bolt Lock		
		(⊛ Used on Modified Units Adams 70, 80 and 86)	3	
46923 D	4	Flywheel Dowel Pin	2	
33817 DB	5	Flywheel Ring Gear (149 Teeth) TDCBM 1995 Up	1	
28173 DA	5	Flywheel Ring Gear (157 Teeth) (⊛ Used on Modified Units Adams 86)	1	
8977 DM	6	Continuous Power Take-off Coupling		
		(⊛ Used on Modified Units Adams 70, 80 and 86)	1	
50954 D	8	Piston Ring, Top (Compression)	4	
50956 D	9	Piston Ring, Intermediate (Compression)	4	
		⊛ - For Tabulation Of Modification see Introduction Page		

DIESEL ENGINE

PART NUMBER	REF. NO.	DESCRIPTION	SERIAL NUMBER	NO. REQ'D
50955 D	10	Piston Ring, Lower (Compression)		4
47953 D	11	Piston Ring (Oil Regulating)		8
31194 H	12	Piston Pin Retainer Ring		8
47643 DA	13	Piston Pin (Standard) (Order 52608 DA)		4
52608 DA	13	Piston Pin (.005" Oversize) (Will work for 47643 DA)		4
47496 DB	14	Connecting Rod Bolt Lock		16
63116 D	14A	Connecting Rod Bolt Washer	TDCBM 7513 up	16
47639 DA	15	Connecting Rod Bolt (Order 63123 DX)	TDCBM 501 to 7512	16
63123 D	15	Connecting Rod Bolt	TDCBM 7513 up	16
63123 DX	15A	Connecting Rod Bolt with Washer, 63116 D		
		(Will Work for 47639 DA)	TDCBM 501 to 7512	16
50977 DAX	16	Crankshaft with Nut, 4253 D and 2 Dowel Pins, 46923 D (Standard)		1
50978 DAX	16	Crankshaft with Nut, 4253 D and 2 Dowel Pins, 46923 D (.030" Undersize)		1
13055 D	17	Crankshaft Gear Key (Woodruff "B" 5/16 x 1")		1
47629 D	18	Crankshaft Gear (27 Teeth)		1
13055 D	19	Fan Drive Pulley Key (Woodruff "B" 5/16 x 1")(Order 33681 D)	TDCBM 501 to 5093	1
33681 D	19	Fan Drive Pulley Key (Woodruff "B" 5/16 x 1" Nickel Steel)		
		(Will Work for 13055 D)	TDCBM 5094 up	2

DIESEL ENGINE

PART NUMBER	REF. NO.	DESCRIPTION	SERIAL NUMBER	NO. REQ'D
8429 DAR	20	Cylinder Sleeve (Order Cylinder Sleeve with Piston, Complete)		
		(Aluminum or Grey Iron)		4
8080 DAR	21	Piston (Aluminum) (Order 56623 DB)		4
9358 DR	21	Piston (Grey Iron) (Order 64452 D)		4
56623 DB	22	Cylinder Sleeve with Piston, Complete (Aluminum)		1
56624 DB	22	Set of Four Cylinder Sleeves with Pistons, 56623 DB		
		(Aluminum) (64451 D Will Work)		1
64451 D	22	Set of Four Cylinder Sleeves with Pistons, 64452 D (Grey Iron)		
		(56624 DB Will Work)		1
64452 D	22	Cylinder Sleeve with Piston, Complete (Grey Iron)		1
47640 DR	23	Piston Pin Bushing		4
52130 DX	24	Connecting Rod, Complete		4
52131 D	24A	Connecting Rod Cap (Order 52130 DX)		4
52132 DX	25	Connecting Rod Bearing (2 Halves) (Standard)		4
52463 DX	25	Connecting Rod Bearing (2 Halves) (.030" Undersize)		4
64379 DX	25	Connecting Rod Bearing (2 Halves) (.003" Undersize)		4
52130 DY	26	Connecting Rod, 52130 DX with Bearing, 52132 DX		4
52135 DX	27	Crankshaft Bearing, Front, Rear and Intermediate (2 Halves) (Standard)		4
52137 DX	27	Crankshaft Bearing, Front, Rear and Intermediate (2 Halves)		
		(.030" Undersize)		4
64380 DX	27	Crankshaft Bearing, Front, Rear and Intermediate (2 Halves)		
		(.003" Undersize)		4
52136 D	28	Crankshaft Bearing, Center (Standard) (Order 52142 D)	TDCBM 501 to 5289	2
52138 DA	28	Crankshaft Bearing, Center (.030" Undersize) (Order 52143 DA)	TDCBM 501 to 5289	2
52142 D	28	Crankshaft Bearing, Center (2 Halves) (Standard)	TDCBM 501 to 5289	1
52143 DA	28	Crankshaft Bearing, Center (2 Halves) (.030" Undersize)	TDCBM 501 to 5289	1
64383 DX	28	Crankshaft Bearing, Center (2 Halves) (.003" Undersize)	TDCBM 501 to 5289	1
63302 D	28A	Crankshaft Center Bearing Thrust Washer		
		(Standard or .003" Undersize) (Order 63299 DX or 64381 DX)	TDCBM 5290 up	4
63303 D	28A	Crankshaft Center Bearing Thrust Washer (.030" Undersize)		
		(Order 63300 DX)	TDCBM 5290 up	4

DIESEL ENGINE

PART NUMBER	REF. NO.	DESCRIPTION	SERIAL NUMBER	NO. REQ'D
63299 DX	28B	Crankshaft Bearing, Center (2 Halves with Thrust Washers)		
		(Standard)	TDCBM 5290 up	1
63300 DX	28B	Crankshaft Bearing, Center (2 Halves with Thrust Washers)		
		(.030" Undersize)	TDCBM 5290 up	1
64381 DX	28B	Crankshaft Bearing, Center (2 Halves with Thrust Washers)		
		(.003" Undersize)	TDCBM 5290 up	1
10319 D	29	Starting Crank Pin		1
		Set Screw, 5/16 x 1/2" N.C. Headless (Cup Point)		1
6652 DB	30	Fan Drive Pulley (not Front Power Take-Off Coupling)		1
8699 DBX	30	Fan Drive Pulley with 2 Dowels, 47490 D and 2 Studs, 24909 D		
		(⊛ Used on Modified Units Adams 70, 80 and 86)		1
36796 DA	30A	Crankshaft Oil Flinger		1
4254 DA	31	Crankshaft Gear Nut Lock (not Front Power Take-Off Coupling)		1
18767 D	31	Crankshaft Gear Nut Lock (⊛ Used on Modified Units Adams 70,80 and 86)		1
4253 D	32	Crankshaft Geap Nut		1
6935 D	33	Starting Crank Ratchet		1
G 3754	34	Starting Crank Ratchet Pin		1
49682 DX	35	Starting Crank, Complete (Order 55911 DX)	(Tractors) TCB 501 to 1295	1
55911 DX	35	Starting Crank, Complete (will work for 49682 DX) (Tractors)	TCB 1296 Up	1
58359 DMX	35	Starting Crank, Complete (⊛ Used on Modified Units Adams 70,80 and 86)		1
8552 D	36	Fuel Supply Pump Drive Pulley		
		(⊛ Used on Modified Units Adams 70, 80 and 86)		1

⊛ - For Tabulation of Modifications see Introduction Page

(Revised 2-'46)

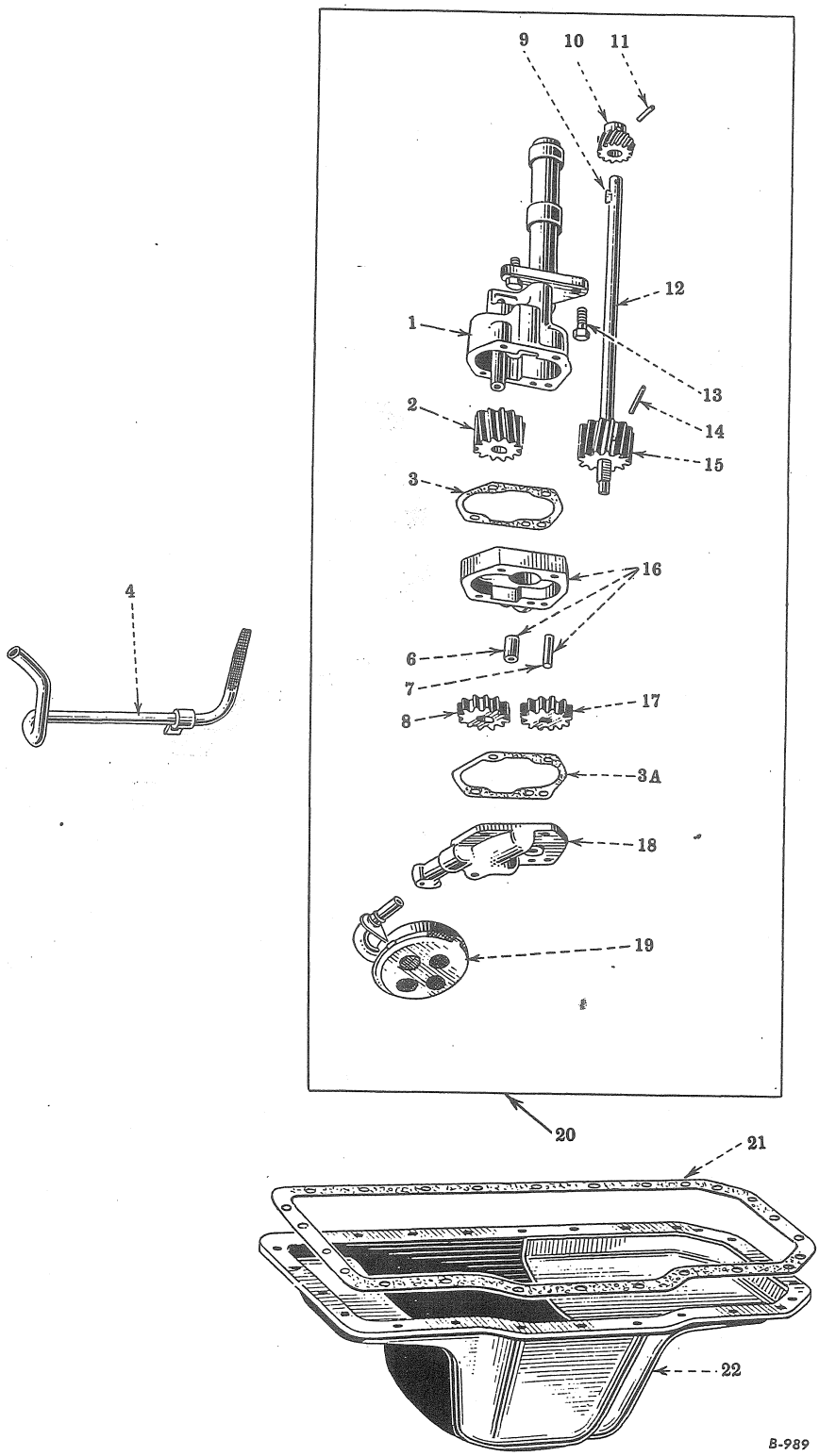

CRANKCASE OIL PAN AND LUBRICATING OIL PUMP

Reference numbers only are shown in illustration. Use I H C part numbers in ordering.

PART NUMBER	REF. NO.	DESCRIPTION	SERIAL NUMBER	NO. REQ'D	
		CRANKCASE OIL PAN AND LUBRICATING OIL PUMP			
8088 DX	1	Lubricating Oil Pump Body with Idler Shaft		1	
51041 DA	2	Lubricating Oil Pump Idler Gear (12 Teeth)		1	
51044 D	3	Lubricating Oil Pump Auxiliary Gear Housing Gasket		1	
51044 D	3A	Lubricating Oil Pump Cover Gasket		1	
51101 DX	4	Oil Return Pipe with Screen		1	
		Cap Screw, 3/8 x 3/4" N.C. Hex. Head		1	
		Lockwasher, 3/8"		1	
46157 D	6	Lubricating Oil Pump Oil Inlet Tube		1	
46053 D	7	Lubricating Oil Pump Auxiliary Gear Housing Dowel Pin		1	
51047 D	8	Lubricating Oil Pump Auxiliary Idler Gear (12 Teeth)		1	
13021 D	9	Lubricating Oil Pump Drive Key (Woodruff No. 6, 5/32 x 5/8")		2	
46595 DA	10	Lubricating Oil Pump Drive Pinion (12 Teeth)		1	
32316 D	11	Lubricating Oil Pump Drive Pinion Pin		1	
51038 DX	12	Lubricating Oil Pump Drive Shaft with Pins, 32316 D and 32319 D		1	
10961 D	13	Lubricating Oil Pump Body Cap Screw		2	
		Lockwasher, 1/2"		2	
32319 D	14	Lubricating Oil Pump Body Gear Pin		1	
51040 DA	15	Lubricating Oil Pump Body Gear (12 Teeth)		1	
8089 DAX	16	Lubricating Oil Pump Auxiliary Gear Housing with Dowel, 46053 D and			
		Tube, 46157 D		1	
51046 D	17	Lubricating Oil Pump Auxiliary Body Gear (12 Teeth)		1	
8210 D	18	Lubricating Oil Pump Cover		1	
		Cap Screw, 3/8 x 2-3/4" N.C. Hex. Head		1	
		Cap Screw, 3/8 x 2" N.C. Hex. Head		3	
		Lockwasher, 3/8"		4	
56108 D	19	Lubricating Oil Pump Screen (Floto)		1	
		Cotter Pin, 1/8 x 1-1/4"		1	
54688 D	20	Lubricating Oil Pump, Complete (Less Reference 13)		1	
51318 D	21	Crankcase Oil Pan Gasket		1	
51317 DXA	22	Crankcase Oil Pan with 3/4" Square Head Pipe Plug (61884 D will work)		1	
		Cap Screw, 3/8 x 1" N.C. Hex. Head		21	
		Cap Screw, 3/8 x 1-1/4" N.C. Hex. Head		4	
		Lockwasher, 3/8"		25	
61884 D	22	Crankcase Oil Pan with Magnetic Drain Plug, 58997 DA			
		(Field Change - Special) (will work for 51317 DXA)		1	
58997 DA		Crankcase Oil Pan Magnetic Drain Plug (Field Change - Special)		1	
68252 D		Lubricating Oil Pump Body Capscrew Lockwire			
		(3/32 x 10" Long Soft Iron Wire)		1	

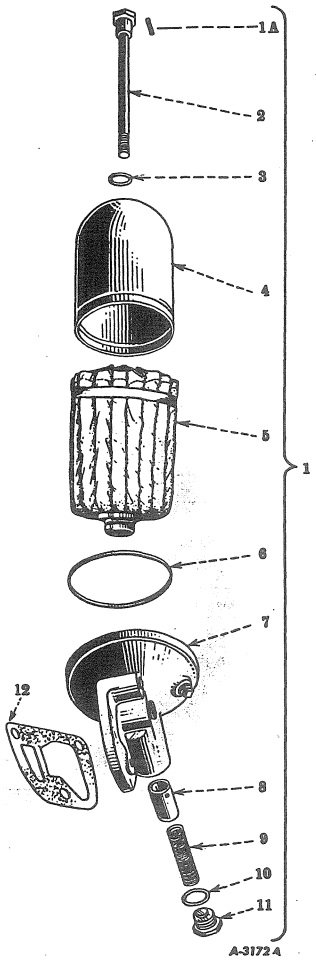

Reference numbers only are shown in illustration.

Use I H C part numbers in ordering.

LUBRICATING OIL FILTER

54650 DA	1	Oil Filter, Complete		1	
G 6579-1/3	1A	Oil Filter Case Retaining Bar Pin		1	
46606 DX	2	Oil Filter Case Retaining Bar with Nut and Pin, G 6579-1/3		1	
13839 D	3	Oil Filter Case Retaining Bar Gasket		1	
13842 D	4	Oil Filter Case		1	
51183 DA	5	Oil Filter Element (Star Shaped Type) (Order 63884 D)	TCBM 501 to 5863	1	
53854 DA	5	Oil Filter Element Replacement Package (6 Elements)			
		(Star Shaped Type) (Order 63885 D)	TDCBM 501 to 5863	1	
63884 D	5	Oil Filter Element (Umbrella Type) (Will Work for 51183 DA)	TDCBM 5864 up	1	
63885 D	5	Oil Filter Element Replacement Package (6 Elements)			
		(Umbrella Type) (Will Work for 53854 DA)	TDCBM 5864 up	1	
13841 D	6	Oil Filter Case Gasket		1	
8113 DAX	7	Oil Filter Base, with 1/4" Square Head and 3/8" Countersunk Head Pipe Plug		1	
		Cap Screw, 7/16" x 1-1/2" N.C. Hex. Head		1	
		Cap Screw, 7/16" x 2-1/2" N.C. Hex Head		2	
		Lockwasher, 7/16"		3	
45285 DA	8	Oil Pressure Regulating Valve		1	
45286 D	9	Oil Pressure Regulating Valve Spring (Order 62672 D)	TDCBM 501 to 3061 ⓧ	1	
62672 D	9	Oil Pressure Regulating Valve Spring (Will Work for 45286 D)	TDCBM 3062 up ⊛	1	
28781 D	10	Oil Pressure Regulating Valve Nut Gasket		1	
51205 D	11	Oil Pressure Regulating Valve Nut		1	
51204 D	12	Oil Filter Base Gasket		1	

⊛ - Also TDCBM 2694 to 3026
ⓧ - Not TDCBM 2694 to 3026

MEMORANDA

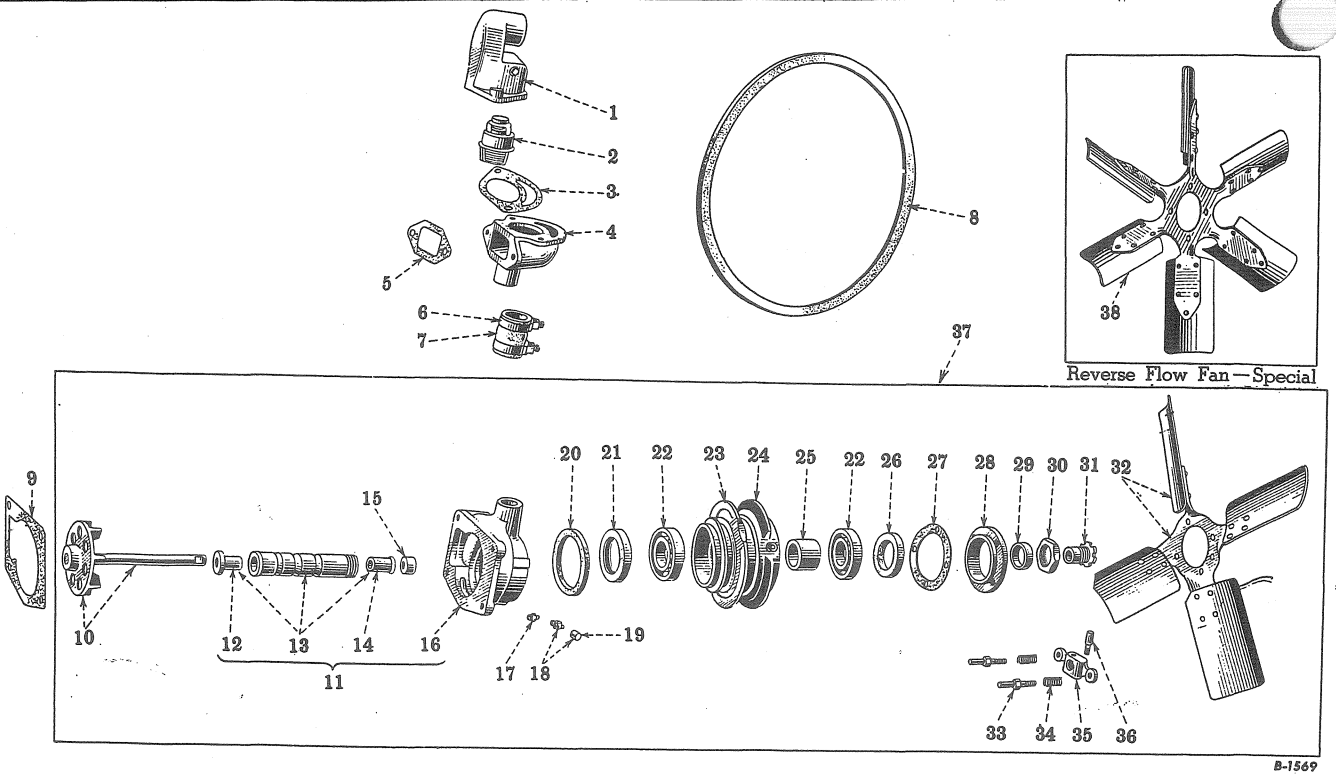

Reference numbers only are shown in illustration. Use I H C part numbers in ordering.
Unnumbered parts in the illustrations are the same as corresponding parts shown with numbers.

FAN, THERMOSTAT AND WATER PUMP

6430 DAX	1	Thermostat Housing with 1/4" Square Head Pipe Plug		1
		Cap Screw, 3/8" x 1" N.C. Hex. Head		2
		Lockwasher, 3/8"		2
33814 D	2	Thermostat (165° - 190°) (Not Low Boiling Point Attachment)		
		(37634 D Will Work)		1
35032 D	2	Thermostat (130° - 155°) (Low Boiling Point Attachment - Special)		
		(37632 D Will Work)		1
37632 D	2	Thermostat (130° - 155°) (Low Boiling Point Attachment - Special)		
		(35032 D Will Work)		1
37634 D	2	Thermostat (165° - 190°) (Not Low Boiling Point Attachment)		
		(33814 D Will Work)		1
45984 D	3	Thermostat Housing Gasket		1
6587 D	4	Water Outlet Elbow (Order 9355 D)	TDCBM 501 to 4112	1
9355 D	4	Water Outlet Elbow (Will Work for 6587 D)	TDCBM 4113 Up	1
		Cap Screw, 3/8" x 1" N.C. Hex. Head		2
		Lockwasher, 3/8"		2
45986 D	5	Water Outlet Elbow Gasket		1
91406 HA	6	Thermostat By-Pass Hose Clamp		2
45985 D	7	Thermostat By-Pass Hose (1-1/2" I.D. x 2-3/8" Long 3 Ply)		1
48042 D	8	Fan and Water Pump Belt		1
47955 D	9	Water Pump Body Gasket		1
6518 DAX	10	Water Pump Impeller with Shaft and Thrust Washer		1

PART NUMBER	REF. NO.	DESCRIPTION	SERIAL NUMBER	NO. REQ'D
68315 D	11	Water Pump Body with Sleeve, 45982 DX (Will Work for 6586 D)		1
		Cap Screw, 7/16 x 1-1/4" N.C. Hex Head		1
		Cap Screw, 7/16 x 2-1/2" N.C. Hex Head		3
		Lockwasher, 7/16"		4
20303 D	12	Water Pump Shaft Thrust Bushing		1
45982 DX	13	Water Pump Shaft Sleeve with Bushing, 20303 D and 24017 D		1
24017 D	14	Water Pump Shaft Bushing		1
50790 D	15	Water Pump Shaft Packing		x
6586 D	16	Water Pump Body (Order 68315 D)		1
Q 3615	17	Water Pump Bearing Lubricator (14186 DA Will Work)		1
14186 DA	17	Water Pump Bearing Lubricator (Q 3615 Will Work)		1
QA 3628	18	Water Pump Shaft Bearing Lubricator with Cap, Q 3659		1
Q 3659	19	Water Pump Shaft Bearing Lubricator Cap		1
20300 D	20	Water Pump Felt Washer		1
20290 D	21	Water Pump Oil Seal, Rear		1
ST 205 A	22	Water Pump Bearing (I.H.C.)(20308 D Will Work)		2
20308 D	22	Water Pump Bearing (N.D. 3207)(St 205 A Will Work)		2
2369 DX	23	Fan and Water Pump Pulley Hub with Oil Seal 20290 D		
		(Order 8023 DX)	TDCBM 501 to 1994	1
8023 DX	23	Fan and Generator Pulley Hub with Oil Seal, 20290 D		
		(Will Work for 2369 DX)	TDCBM 1995 up	1
2370 DAX	24	Fan and Water Pump Pulley Flange with Set Screw,		1
		5/16" x 7/8" N.C. Headless (Dog Point) and Hex Jam Nut, 5/16" N.C.		1
45993 D	25	Water Pump Bearing Spacer		1
20289 D	26	Water Pump Oil Seal, Front		1
21839 D	27	Water Pump Bearing Retainer Gasket		1
20306 DX	28	Water Pump Bearing Retainer with Oil Seal, 20289 D		1
20293 D	29	Water Pump Bearing Lock Sleeve		1
20299 D	30	Water Pump Bearing Clamp Nut		1
20296 D	31	Water Pump Packing Gland		1
21259 D	32	Fan SUCTION		1
		Cap Screw, 5/16" x 1" N.C. Hex Head		2
		Lockwasher, 5/16"		2
20301 D	33	Water Pump Driving Stud		2
		Lockwasher, 5/16"		2
G 3792	34	Water Pump Driver Spring		2
20585 D	35	Water Pump Driver		1
20586 D	36	Water Pump Driver Pin		1
		Hex. Nut, 5/16" N.F.		1
		Lockwasher, 5/16"		1
49185 D	37	Fan and Water Pump, Complete (Not Electric Lighting)	TDCBM 501 to 1994	1
57041 D	37	Fan and Water Pump, Complete	TDCBM 1995 up	1
57041 D	37	Fan and Water Pump, Complete (Electric Lighting Special)	TDCBM 501 to 1994	1
43222 VA		Water Pump Impeller Pin	TDCBM 501 to 2485	1
64071 D		Low Boiling Point Thermostat and Heat Indicator Attachment - Special		
		(Consisting of Thermostat, 35032 D or 37632 D and Heat Indicator)		1

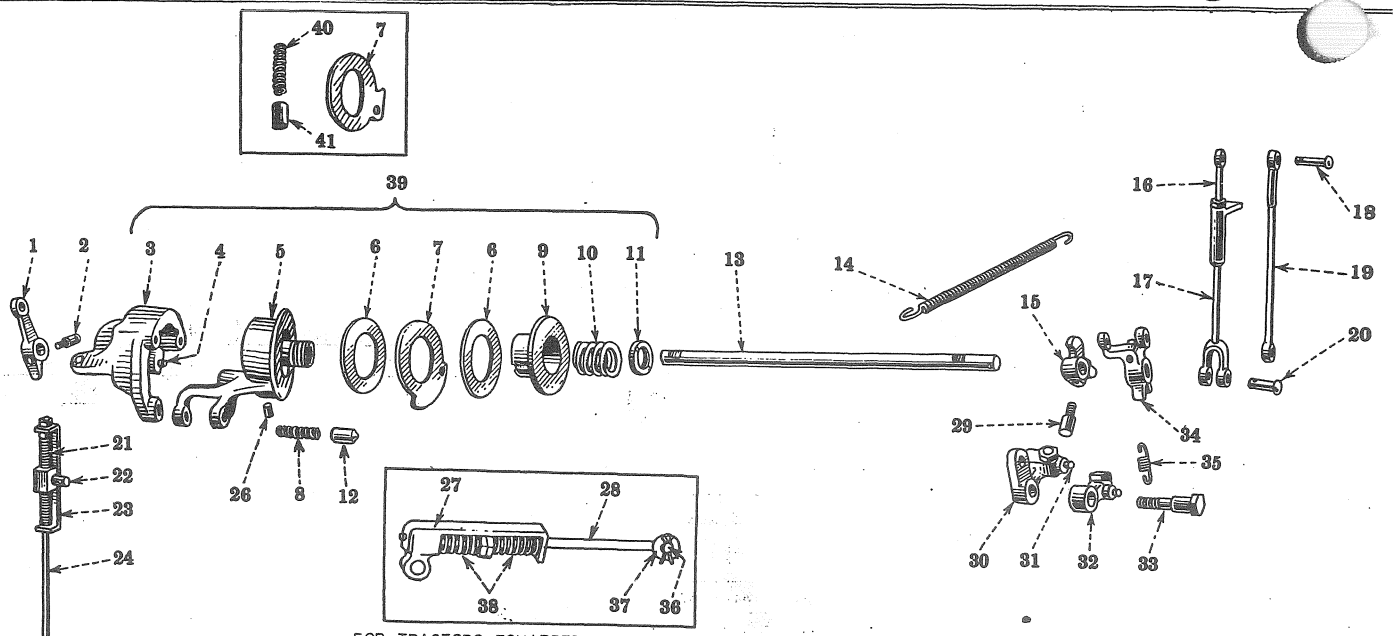

FOR TRACTORS EQUIPPED WITH IHC PUMP.

Reference numbers only are shown in illustration. Use I H C part numbers in ordering.

A-5875

STARTING MECHANISM AND GOVERNOR CONTROL

54086 D	1	Cross Shaft Operating Lever		1	
20586 D	2	Cross Shaft Operating Lever Pin		1	
		Hex. Nut, 5/16" N.F.		1	
		Lockwasher, 5/16"		1	
8525 DB	3	Cross Shaft Bracket (Order 64574 D Except on Modified Units			
		Adams 70 and 80 Order 9446 DAX)	501 to 9873	1	
		Cap Screw, 3/8 x 2-1/2" N.C. Hex. Head		2	
		Cap Screw, 3/8 x 1-3/8" N.C. Hex. Head		1	
		Set Screw, 5/16 x 1-1/4" N.C. Headless (Oval Point)		1	
		Hex. Jam Nut, 5/16" N.C.		1	
		Lockwasher, 3/8"		3	
9446 DAX	3	Cross Shaft Bracket with Pin, 45391 D	TDCBM 9874 Up	1	
		Cap Screw, 3/8 x 1-3/8" N.C. Hex Head		1	
		Cap Screw, 3/8 x 2-1/2" N.C. Hex Head		2	
		Set Screw, 5/16 x 1-1/4" N.C. Headless (Oval Point)		1	
		Hex Jam Nut, 5/16" N.C.		1	
		Lockwasher, 3/8"		3	
45391 D	4	Friction Control Disc Pin	TDCBM 9874 Up	1	
8424 DX	5	Governor Control Lever with Pin, 25115 D (Order 64574 D)	TDCBM 501 to 9873	1	
9447 DX	5	Governor Control Lever with Pin, 25115 D	TDCBM 9874 Up		
48356 D	6	Governor Control Friction Disc		2	
54085 D	7	Governor Control Disc (Stationary)	TDCBM 501 to 9873	1	
64543 D	7	Governor Control Disc (Stationary)	TDCBM 9874 Up	1	
64545 D	8	Low Idle Poppet Spring	TDCBM 9874 Up	1	
6649 D	9	Governor Control Friction Disc Retainer, Inner		1	
48358 D	10	Governor Control Friction Spring		1	
48359 D	11	Governor Control Friction Spring Nut		1	
64544 D	12	Low Idle Poppet	TDCBM 9874 Up	1	
51532 D	13	Control Cross Shaft		1	
52176 DC	14	Cross Shaft Return Spring		1	
52626 D	15	Cross Shaft Jaw Lever		1	

DIESEL ENGINE

PART NUMBER	REF. NO.	DESCRIPTION	SERIAL NUMBER	NO. REQ'D
56174 D	16	Starting Valve Cross Shaft Operating Rod Adjuster (56587 DX will work)		1
		Hex Nut, 5/16" N.F.		1
56587 DX	16	Starting Valve Cross Shaft Operating Rod Adjuster (56174 D will work)		1
		Hex Nut, 5/16" N.F.		1
51530 DX	17	Starting Valve Cross Shaft Operating Rod		1
51068 D	18	Starting Valve Operating Shaft Lever Pin		1
		Cotter Pin, 3/32 x 5/8"		1
51067 DX	19	Carburetor Control Rod		1
19306 D	20	Starting Valve Cross Shaft Operating Rod Pin		1
		Cotter Pin, 3/32 x 5/8"		1
54125 D	21	Governor Control Rod Spring (See Note "A")		2
42981 DA	22	Governor Control Rod Trunnion (See Note "A")		1
		Cotter Pin, 3/32 x 5/8"		1
		Steel Washer, 13/32" I.D. x 3/4" O.D. x No. 16 Ga.		1
54124 D	23	Governor Control Rod Trunnion Guide (See Note "A")		1
51605 DX	24	Governor Control Rod (See Note "A")	TDCBM 501 to 3210	1
		Hex Jam Nut, 5/16 N.F.		2
60141 DX	24	Governor Control Rod (See Note "A")	TDCBM 3211 Up	1
		Hex Jam Nut, 5/16" N.F.		2
19306 D	25	Governor Lever Pin		1
		Cotter Pin, 3/32 x 5/8"		1
25115 D	26	Governor Control Dowel Pin		1
52640 D	27	Governor Control Rod Trunnion (See Note "B")		1
63446 DX	28	Governor Control Rod (See Note "B")		1
		Hex Jam Nut, 5/16" N.F.		2
20586 D	29	Cross Shaft Jaw Lever Pin		1
		Hex. Nut, 5/16" N.F.		1
		Lockwasher, 5/16"		1
8617 DAX	30	Cross Shaft Latch Bracket with Pin, 52623 D		1
		Set Screw, 3/8 x 1-1/2" N.C. Flat Point		1
		Hex. Jam Nut, 3/8" N.C.		1
52623 D	31	Cross Shaft Latch Spring Pin		2
52621 DX	32	Cross Shaft Latch with Pin, 52623 D		1
55354 DA	33	Cross Shaft Latch Pin		1
52620 D	34	Cross Shaft Jaw		1
		Set Screw, 5/16 x 1-1/4" N.C. Headless (Flat Point)		1
		Hex. Jam Nut, 5/16" N.C.		1
		Cotter Pin, 1/8 x 1"		1
		Steel Washer, 21/32" I.D. x 1" O.D. x No. 12 Ga.		1
52624 D	35	Cross Shaft Latch Spring		1
63447 D	36	Governor Control Rod (See Note "B")		1
		Cotter Pin, 3/32 x 5/8"		1
28950 D	37	Governor Control Rod Pin Washer (See Note "B")		1
64996 D	38	Governor Control Rod Spring (See Note "B")		2
64574 D	39	Governor Control, Complete		
		(Will Work for 8424 DX and 8525 DB)	TDCBM 501 to 9873	1
48355 D	40	Governor Control Lever Stop Spring	TDCBM 501 to 9873	1
48354 D	41	Governor Control Lever Stop	TDCBM 501 to 9873	1
		Note "A" - On Engines Equipped with Bosch Injection Pump		
		Note "B" - On Engines Equipped wtth IHC Injection Pump		

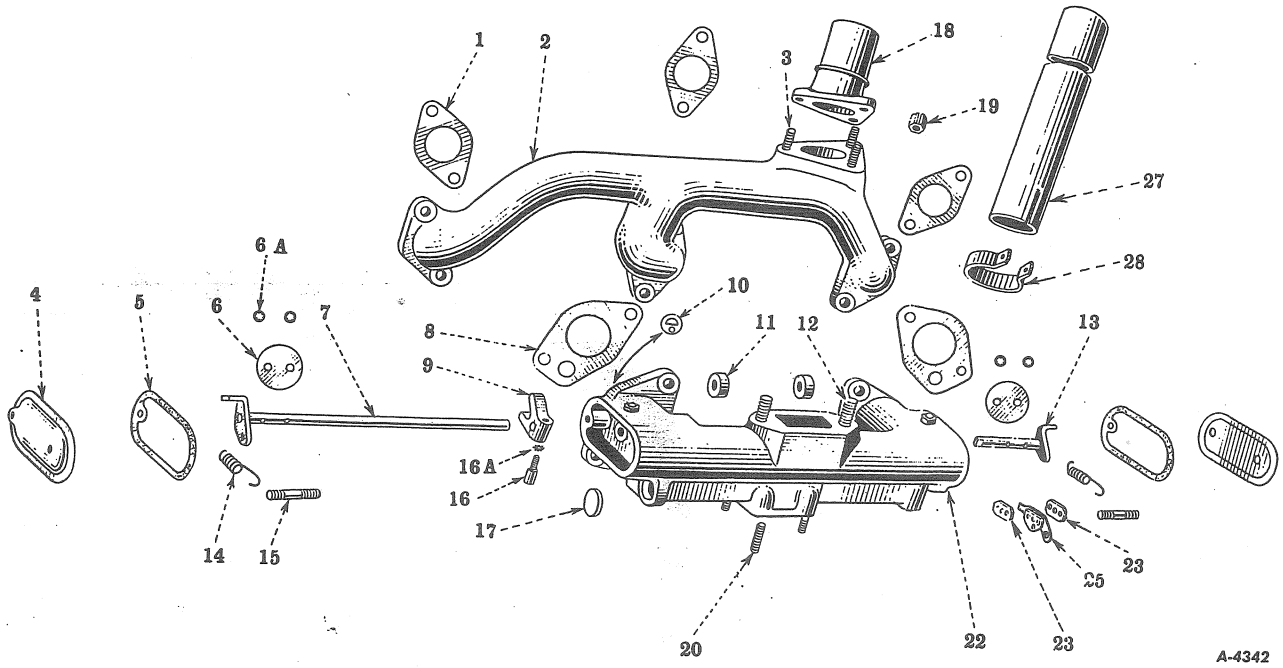

Reference numbers only are shown in illustration. Use I H C part numbers in ordering.
Unnumbered parts in the illustrations are the same as corresponding parts shown with numbers.

MANIFOLD AND EXHAUST PIPE

48311 D	1	Exhaust Manifold Gasket		3	
8169 DX	2	Exhaust Manifold with 3 Studs, 50677 D		1	
50677 D	3	Exhaust Pipe Stud		3	
		Hex. Nut, 1/2" N.C. (will work for 19962 D)		3	
52519 D	4	Intake Manifold End Cover		2	
		Cap Screw, 1/4 x 3/4" N.C. Hex. Head		2	
		Lockwasher, 1/4"		2	
52520 D	5	Intake Manifold End Cover Gasket		2	
51672 D	6	Intake Manifold Butterfly Valve		2	
		Screw, No. 8 - 32 x 1/2" N.C. Oval Head	TDCBM 501 to 2601	4	
		Screw, No. 8 - 32 x 3/8" N.C. Round Head	TDCBM 2602 Up	4	

PART NUMBER	REF. NO.	DESCRIPTION	SERIAL NUMBER	NO. REQ'D
48716 H	6A	Intake Manifold Butterfly Valve Lockwasher		
		(Shakeproof No. 1208)	TDCBM 2602 up	4
51671 DX	7	Intake Manifold Control Shaft, Rear with Lever	TDCBM 2602 up	1
51668 DA	8	Intake Manifold Gasket		2
51673 D	9	Intake Manifold Control Lever		1
56527 D	10	Intake Manifold Baffle	TDCBM 501 to 6178	2
53083 D	11	Intake Manifold Control Shaft Seal		2
G 1988	12	Air Cleaner Pipe Stud		2
51670 DX	13	Intake Manifold Control Shaft and Lever Front with		
		Rivet, 1/8 x 3/16" Round Head (Brass)		1
56107 D	14	Intake Manifold Control Spring		2
54964 D	15	Intake Manifold Control Spring Stud		2
		Hex Nut, 5/16" N.F.		2
		Lockwasher, 5/16"		2
42739 DA	16	Intake Manifold Control Lever Pin		1
		Hex. Nut, 1/4" N.F.		1
		Lockwasher, 1/4" (Order 2853 Y)		1
2853 Y	16A	Intake Manifold Control Lever Pin Lockwasher (Shakeproof No. 1114)		1
23007 V	17	Intake Manifold Expansion Plug, 1"		2
6995 DB	18	Exhaust Pipe		1
19962 D	19	Exhaust Pipe Stud Nut (Order Standard 1/2" N.C. Hex. Nut)		3
50705 D	20	Carburetor Stud		4
		Hex Nut, 5/16" N.F.		4
		Lockwasher, 5/16"		4
8495 DBX	22	Intake Manifold, Complete		1
		Set Screw, 5/16 x 3/4" N.C. Headless (Oval Point)		2
		Hex. Nut, 5/16" N.C.		2
52514 D	23	Ignition Cutout Switch Insulating Plate		2
		Screw, No. 10 - 24 x 1" Round Head		1
		Lockwasher, 3/16"		1
		Steel Washer, 13/64" I.D. x 1/2" O.D. x No. 18 Ga.		1
52515 DA	25	Ignition Cotout Switch Contact and Terminal Plate, Complete		1
52254 D	27	Exhaust Pipe Extension		1
23132 D	28	Exhaust Pipe Extension Clamp		1
		Cap Screw, 5/16 x 2-1/4" N.C. Hex. Head		1
		Hex. Nut, 5/16" N.C.		1
		Lockwasher, 5/16"		1

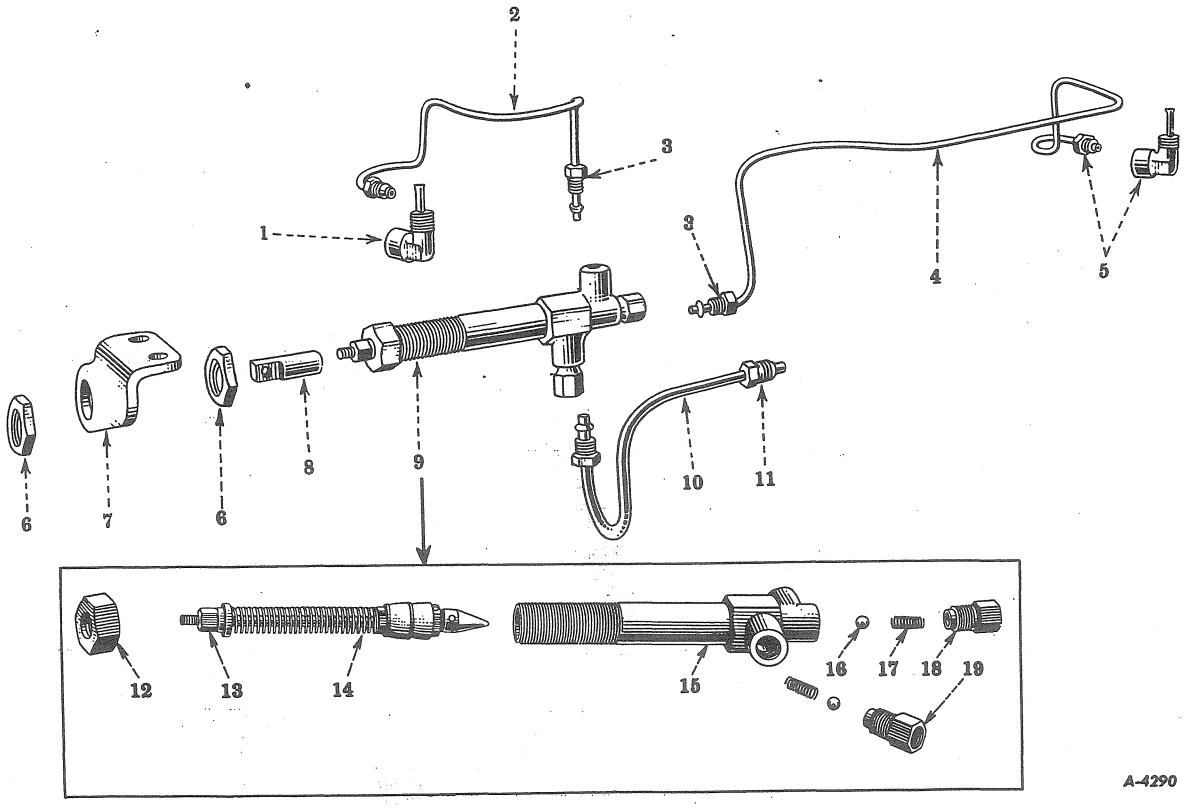

TDCBM 501 to 2461

Reference numbers only are shown in illustration. Use I H C part numbers in ordering.
Unnumbered parts in the illustrations are the same as corresponding parts shown with numbers.

STARTING PRIMER AND CONTROL

50683 D	1		PRIMER SPRAY ELBOW	2	
53984 DX	2		PRIMER PIPE, REAR WITH 2 NUTS, 36092 D	1	
36092 D	3		PRIMER PIPE NUT	4	
36092 D	3	28735	PRIMER PIPE NUT	2	
53983 DX	4		PRIMER PIPE, FRONT WITH 2 NUTS, 36092 D	1	
50683 DX	5		PRIMER SPRAY ELBOW WITH NUT, 36092 D	2	
42215 D	6		PRIMER NUT	2	

DIESEL ENGINE

I H C PART NUMBER	REF. NO.	MFR'S. NUMBER	DESCRIPTION	SERIAL NUMBER	NO. REQ'D	
50682 D	7		PRIMER BRACKET		1	
			CAP SCREW, 5/16" x 3/4" N.C. HEX. HEAD		2	
			LOCKWASHER, 5/16"		2	
42772 D	8		PRIMER CONTROL ROD END		1	

STARTING PRIMER (Imperial Brass Mfg. Company)

53136 D	9	43173	STARTING PRIMER, COMPLETE (54692 DA WILL WORK)		1	
54692 DA	9		STARTING PRIMER, COMPLETE (53136 D WILL WORK)		1	
53985 DX	10		PRIMER INLET PIPE WITH 2 NUTS, 25038 HA		1	
25038 HA	11		PRIMER INLET PIPE NUT		2	
25038 HA	11	28736	PRIMER INLET PIPE NUT		1	
54694 D	12		PRIMER BODY TUBE NUT		1	
60200 D	12	43173-5	PRIMER BODY TUBE NUT		1	
54697 D	13		PRIMER PLUNGER ROD NUT		1	
54695 DA	14		PRIMER PLUNGER, COMPLETE		1	
			HEX NUT, No. 10 - 32 (CADMIUM PLATED)		1	
59884 D	14	27076	PRIMER PLUNGER		1	
			HEX. NUT, No. 10 - 32 (CADMIUM PLATED)		1	
8573 DX	15		PRIMER BODY WITH TUBE		1	
59888 D	15	43173-3	PRIMER BODY WITH TUBE		1	
29836 D	16	1194	PRIMER CHECK VALVE BALL, 3/16" DIAMETER		2	
57293 D	16		PRIMER CHECK VALVE BALL, 3/16" DIAMETER		2	
54709 D	17		PRIMER CHECK VALVE SPRING		2	
59880 D	17	1165	PRIMER CHECK VALVE SPRING		2	
54710 D	18		PRIMER OUTLET CHECK VALVE RETAINER		1	
59889 D	18	43173-4	PRIMER OUTLET CHECK VALVE BODY		1	
54708 D	19		PRIMER INLET CHECK VALVE RETAINER		1	
59887 D	19	43173-2	PRIMER INLET CHECK VALVE BODY		1	

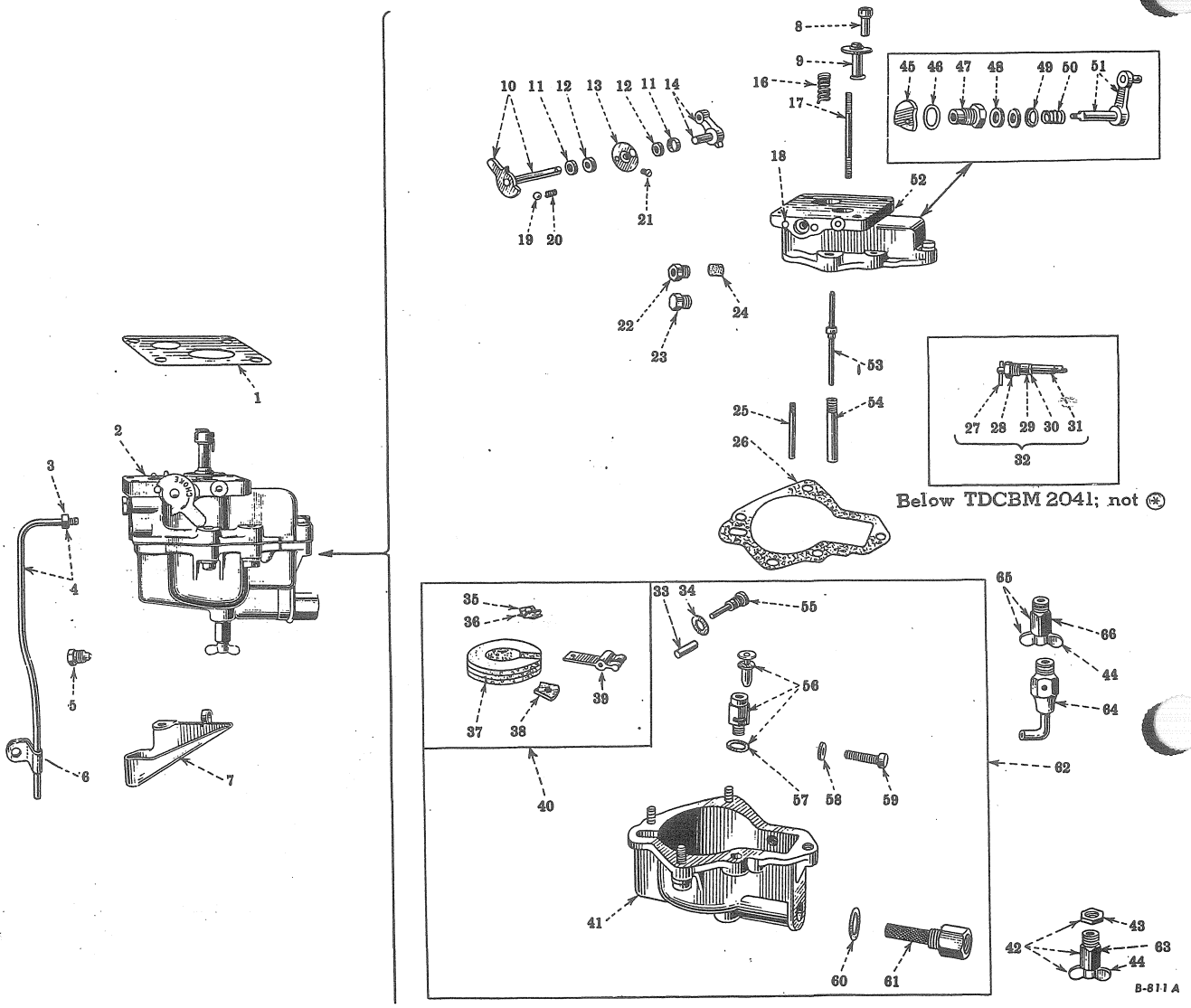

Reference numbers only are shown in illustration. Use I H C part numbers in ordering.
Unnumbered parts in the illustrations are the same as corresponding parts shown with numbers.

CARBURETOR, INTERNATIONAL MODEL F-8 (For Starting on Gasoline)

53459 DA	1	Carburetor Gasket		1	
56543 D	2	Carburetor, Complete (Order 59100 DA	TDCBM 501 to 2040, Not ⊛	1	
56543 DD	2	Carburetor, Complete	TDCBM 2041 Up, Also ⊛	1	
59100 DA	2	Carburetor, 56543 DD with Drain Tube, 53971 DX and Clip,			
		50821 D (Will Work for 56543 D)	TDCBM 501 to 2040, Not ⊛	1	
25038 HA	3	Carburetor Drain Tube Nut	TDCBM 2041 Up	1	
53971 DX	4	Carburetor Drain Tube with Nut, 25038 HA	TDCBM 2041 up, Also ⊛	1	
61338 D	5	Primer Connection Plug	TDCBM 2462 Up	1	
50821 D	6	Carburetor Drain Tube Clip	TDCBM 2041 Up, Also ⊛	1	
58843 DX	7	Carburetor Drain Trough	TDCBM 2184 up	1	

⊛ - TDCBM 1732, 1750, 1753, 1765, 1809, 1841, 1855, 1921

DIESEL ENGINE

PART NUMBER	REF. NO.	DESCRIPTION	SERIAL NUMBER	NO. REQ'D	
50807 D	8	Air Valve Collar		1	
53875 DA	9	Air Valve		1	
56537 DX	10	Starting Shutter Outer Lever and Shaft, Long		1	
45148 D	11	Dust Seal Retainer		2	
45149 D	12	Dust Seal		2	
56542 DX	13	Starting Shutter		1	
56538 DX	14	Starting Shutter Inner Lever and Shaft, Short		1	
27452 D	16	Air Valve Spring		1	
53840 D	17	Air Valve Guide		1	
		Cotter Pin, 1/16" x 3/4" (Cadmium Plated)		1	
45110 D	18	Starting Lever Stop Pin		2	
46184 D	19	Friction Spring Ball, 3/16"		1	
46059 D	20	Starting Lever Friction Spring		1	
31636 D	21	Starting Shutter Screw		2	
50802 D	22	Carburetor Drain Tube Connector	TDCBM 2041 up, Also (*)	1	
58835 D	23	Air Valve Control Plug (Will Work for 53842 D)	TDCBM 501 to 2040, Not (*)	1	
27445 DB	24	Drip Hole Filler	TDCBM 2041 Up, Also (*)	1	
50803 D	25	Fuel Inlet Tube		1	
32606 DA	26	Fuel Bowl Gasket		1	

(*) - TDCBM 1732, 1750, 1753, 1765, 1809, 1841, 1855, 1921

DIESEL ENGINE

PART NUMBER	REF. NO.	DESCRIPTION	SERIAL NUMBER	NO. REQ'D
47403 D	27	Air Valve Control Shaft Cross Pin	TDCBM 501 to 2040, Not (*)	1
32896 D	28	Air Valve Control Shaft Gland	TDCBM 501 to 2040, Not (*)	1
24703 D	29	Air Valve Control Shaft Packing	TDCBM 501 to 2040, Not (*)	1
50814 D	30	Air Valve Control Shaft Retainer	TDCBM 501 to 2040, Not (*)	1
53843 D	31	Air Valve Control Shaft	TDCBM 501 to 2040, Not (*)	1
53842 D	32	Air Valve Control, Complete (Order 58835 D)	TDCBM 501 to 2040, Not (*)	1
32604 D	33	Float Lever Spacer		1
25948 D	34	Float Lever Pivot Screw Gasket		1
32578 D	35	Float Lever Spring Upper Leaf		1
32577 D	36	Float Lever Spring Lower Leaf		1
32572 DAX	37	Cork Float with Ferrule		1
32574 D	38	Float Reinforcing Plate		1
32575 D	39	Float Lever		1
		Screw, No. 4 - 36" x 7/16" Round Head (Cadmium Plated)		1
53079 D	40	Float and Lever, Complete		1
5051 DX	41	Fuel Bowl with Spacer, 32604 D (9390 DX Will Work)		1
	58	Lockwasher, No. 12 (Cadmium Plated)		5
	59	Screw, No. 12 - 24" x 7/8" Fillister Head (Cadmium Plated)		5
9390 DX	41	Fuel Bowl with Spacer, 32604 D (5051 DX Will Work)		1
	58	Lockwasher, No. 12 (Cadmium Plated)		5
	59	Screw, No. 12 - 24" x 7/8" Fillister Head (Cadmium Plated)		5
58840 DX	42	Carburetor Drain Cock Complete	TDCBM 2178 up, Also (X)	1
58837 D	43	Carburetor Drain Cock Lock Nut	TDCBM 2178 up Also (X)	1
64536 D	44	Carburetor Drain Cock Stem		1
32582 D	45	Locking Shaft Cam		1
58836 D	46	Locking Shaft Bearing Gasket		1
51735 D	47	Locking Shaft Bearing		1
32588 D	48	Locking Shaft Dust Washer		2
32587 D	49	Locking Shaft Dust Washer Retainer		1
32586 D	50	Locking Shaft Dust Washer Spring		1
51732 D	51	Locking Shaft and Lever, Complete		1
		Hex. Nut, No. 8 - 32 (Cadmium Plated)		1
		Lockwasher, No. 8 (Cadmium Plated)		1
		Cotter Pin, 1/16 x 7/16"		1
		Washer, 9/32" I.D. x 5/8" O.D. x N.D. 18 Gauge		1

(*) - TDCBM 1525, 1688

(X) - TDCBM 1665, 2014, 2032, 2055, 2095, 2121

DIESEL ENGINE

PART NUMBER	REF. NO.	DESCRIPTION	SERIAL NUMBER	NO. REQ'D
8479 DAX	52	Carburetor Body, Complete (Order 59097 D)	TDCBM 501 to 2040, Not (*)	
8479 DBX	52	Carburetor Body, Complete	TDCBM 2041 Up, Also (*)	
59097 D	52	Carburetor Body, Complete (Will Work for 8479 DAX)	TDCBM 501 to 2040, Not (*)	1
53837 DX	53	Metering Nozzle		1
55660 DA	54	Metering Well		1
32576 DX	55	Float Lever Pivot Screw		1
32581 DXA	56	Needle Valve and Cage with Gasket, 25948 D		1
25948 D	57	Needle Valve Cage Gasket (Order 59241 D)		1
59241 D	57	Needle Valve Cage Gasket (Will Work for 25948 D)		1
	58	Follows Reference No. 41		
	59	Follows Reference No. 41		
18377 D	60	Strainer Screen Gasket		1
29902 DX	61	Strainer Screen Retainer with Screen		1
35691 D	62	Fuel Bowl, Complete		1
64932 D	63	Carburetor Drain Cock Body	TDCBM 2178 up, Also (X)	1
26407 D	64	Drain Cock (9983 TB Will Work)	TDCBM 501 to 2177, Not (X)	1
9983 TB	65	Drain Cock Consisting of Stem, 64536 D and Body, 67942 D		
		(26407 D Will Work)	TDCBM 501 to 2177, Not (X)	1
67942 D	66	Carburetor Drain Cock Body	TDCBM 501 to 2177, Not (X)	1
60218 D		Field Change Package for Adding Carburetor Drain Tube and		
		Changing Carburetor to 56543 DD	TDCBM 501 to 2182, Not (‡)	

(‡) - TDCBM 1525, 1688

(X) - TDCBM 1665, 2014, 2032, 2055, 2095, 2121

(*) - TDCBM 1732, 1750, 1753, 1765, 1809, 1841, 1855, 1921

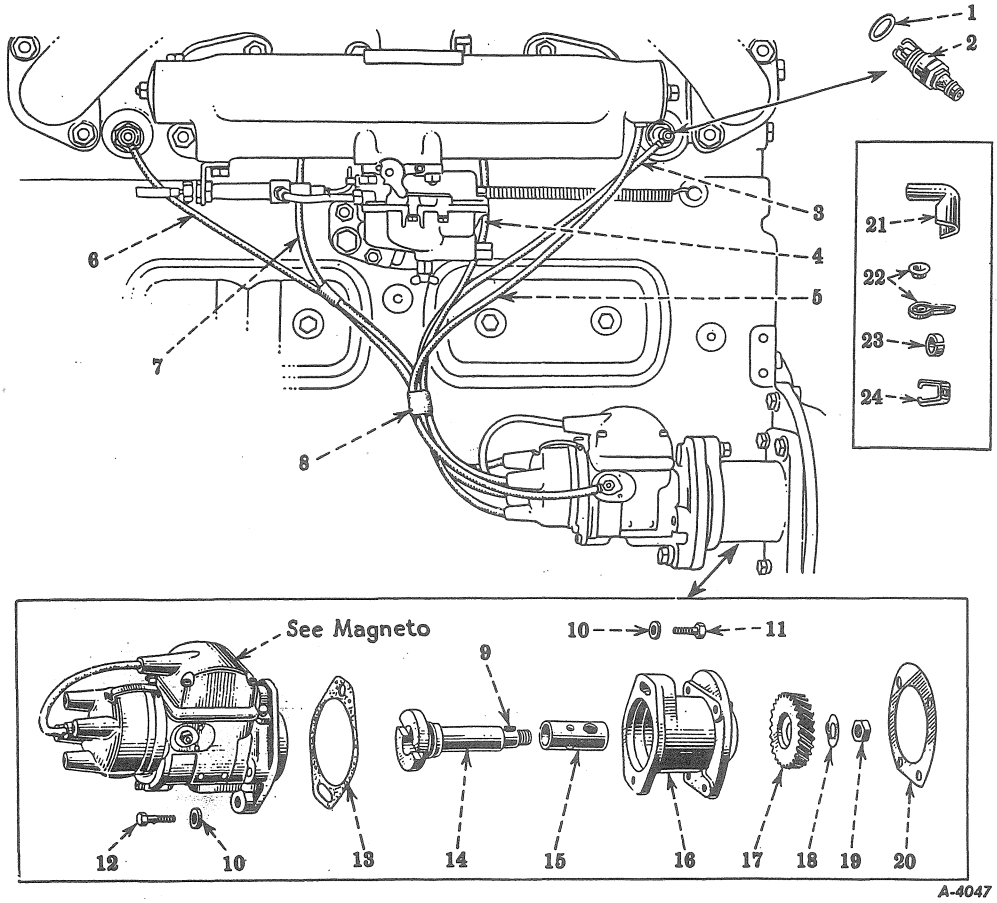

Reference numbers only are shown in illustration. Use I H C part numbers in ordering.
Unnumbered parts in the illustrations are the same as corresponding parts shown with numbers.

SPARK PLUGS, CABLES, MAGNETO DRIVE AND BRACKET

37762 H	1	Spark Plug Gasket		4	
50307 DB	2	Spark Plug (Champion No. 49) (50309 DA Will Work)		4	
50309 DA	2	Spark Plug (A.C. No. 18-A) (50307 DB Will Work)		4	
30083 D	3	Spark Plug Cable, No. 1 (Order 65343 D)	TDCBM 501 to 8350	1	
65343 D	3	Spark Plug Cable, No. 1 (Will Work for 30083 D)	TDCBM 8351 up	1	
28589 D	4	Spark Plug Cable, No. 2 (Order 65323 D)	TDCBM 501 to 8350	1	
65323 D	4	Spark Plug Cable, No. 2 (Will Work for 28589 D)	TDCBM 8351 up	1	
51233 D	5	Magneto Short Circuiting Cable, Complete		1	
		Screw, No. 10 - 32 x 5/16" Fillister Head (Cadmium Plated)		1	
		Screw, No. 10 - 32 x 3/8" Round Head (Switch End)		1	
		Lockwasher, No. 10 (Cadmium Plated)		2	
42221 D	6	Spark Plug Cable, No. 4 (Order 65348 D)	TDCBM 501 to 8350	1	
65348 D.	6	Spark Plug Cable, No. 4 (Will Work for 42221 D)	TDCBM 8351 up	1	
28113 D	7	Spark Plug Cable, No. 3 (Order 65333 D)	TDCBM 501 to 8350	1	
65333 D	7	Spark Plug Cable, No. 3 (Will Work for 28113 D)	TDCBM 8351 up	1	

PART NUMBER	REF. NO.	DESCRIPTION	SERIAL NUMBER	NO. REQ'D
54537 DA	8	Set of Spark Plug Cables with Magneto Short Circuiting Cable		
		(Order 65364 D)	TDCBM 501 to 8350	1
65364 D	8	Set of Spark Plug Cables with Magneto Short Circuiting Cable		
		(Will Work for 54537 DA)	TDCBM 8351 up	1
4167 T	9	Magneto Drive Coupling Key (Woodruff No. 3 - 1/8 x 1/2		1
22828 D	10	Magneto Bolt Washer (Order 62493 D)		2
24523 D	10	Magneto Bolt Washer (Order 62493 D)		2
40433 D	10	Magneto Bolt Washer (Order 62493 D)		2
62493 D	10	Magneto Bolt Washer (will work for 22828 D, 24523 D and 40433 D)		2
	11	Cap Screw, 3/8 x 1-7/8" N.C. Hex. Head		1
		Lockwasher, 3/8"		6
	12	Cap Screw, 3/8 x 1-1/2" N.C. Hex. Head		1
55780 DA	13	Magneto Flange Gasket		1
45001 D	14	Magneto Drive Shaft (not Hour Meter)		1
24473 DA	15	Magneto Drive Shaft Bushing		1
8082 DX	16	Magneto Bracket with Bushing, 24473 DA and 2 Washers, 62493 D		1
		Cap Screw, 3/8 x 1-3/8" N.C. Hex. Head		4
51773 DA	17	Magneto Drive Gear (27 Teeth)		1
45003 D	18	Magneto Gear Nut Lock		1
	19	Hex. Jam Nut, 5/8" N.F.		1
51775 D	20	Magneto Bracket Gasket		1
84319 H	21	Spark Plug Cable Terminal (Snap on Type)	TDCBM 8351 up	4
1924 T	22	Spark Plug Cable Terminal (Ring Type)	TDCBM 501 to 8350	4
1924 T	22	Magneto Short Circuiting Cable Terminal (Ring Type)		2
27618 D	23	Spark Plug Cable Reinforcement	TDCBM 501 to 8350	4
27618 D	23	Magneto Short Circuiting Cable Reinforcement		2
37291 D	24	Spark Plug Cable Terminal (Push Type)		4
51234 DA		Magneto Short Circuiting Cable Grommet		1

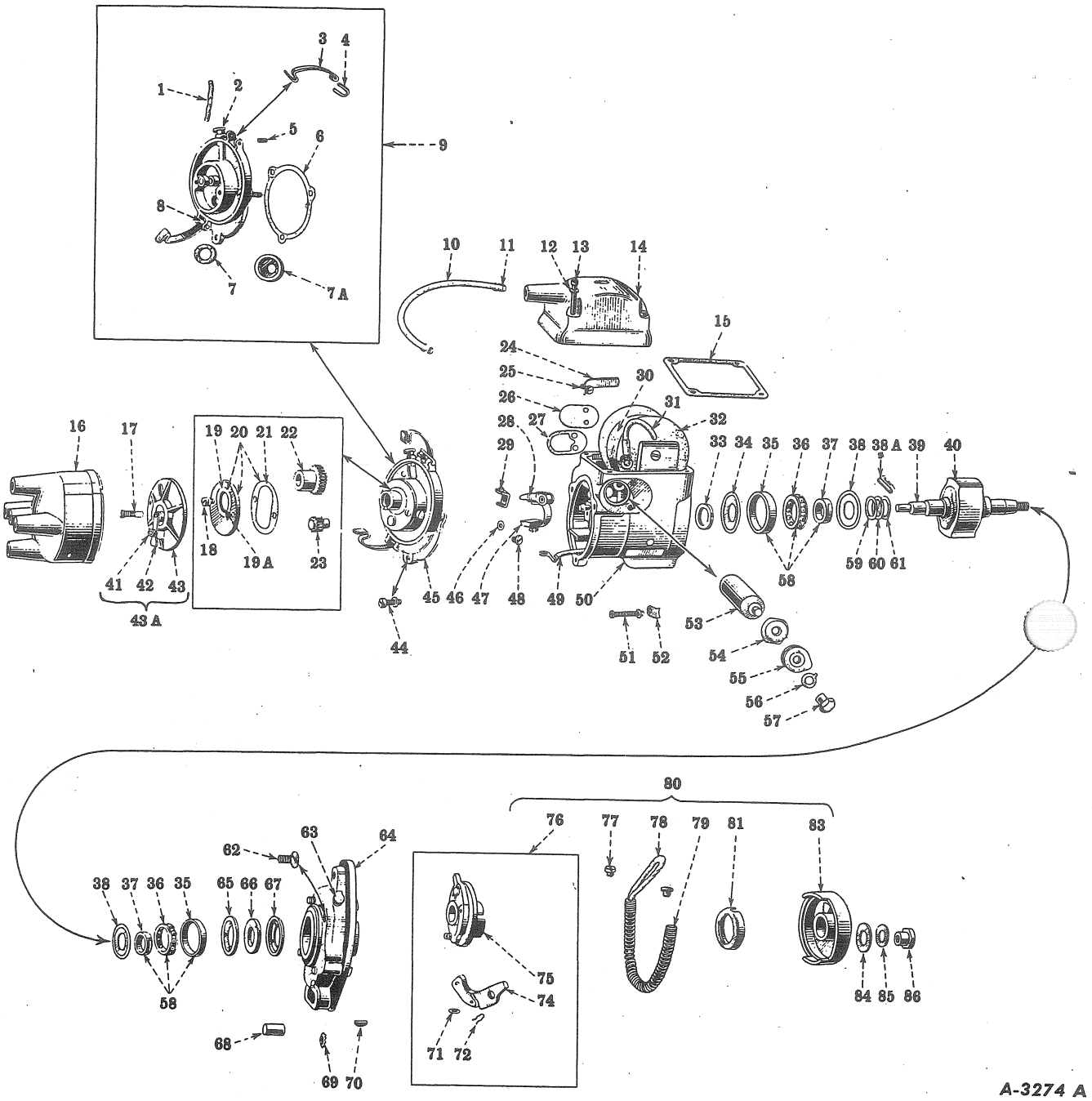

Reference numbers only are shown in illustration. Use I H C part numbers in ordering.
Unnumbered parts in the illustrations are the same as corresponding parts shown with numbers.

MAGNETO, INTERNATIONAL TYPE H-4

49094 D		MAGNETO, COMPLETE (COUNTER-CLOCKWISE)	1	

Always give MAGNETO NUMBER when ordering Parts.

DIESEL ENGINE

PART NUMBER	REF. NO.	DESCRIPTION	SERIAL NUMBER	NO. REQ'D
E4 216	1	Oil Well Felt		1
E4 295	2	Oiler		1
51666 D	3	Distributor Cap Spring		2
55855 D	4	Distributor Cap Spring Stop Pin	Magneto 59061 Up	1
47424 D	5	Distributor Cap Locating Pin		1
47408 D	6	Distributor Body Gasket		1
49423 D	7	Distributor Body Felt Seal		1
49424 D	7A	Distributor Body Felt Retainer		1
51667 D	8	Distributor Cap Spring Pin	Magneto 501 to 59060	1
6483 DY	9	Distributor Body, Complete (9411 DX Will Work)		1
9411 DX	9	Distributor Body, Complete (6483 DY Will Work)		1
49125 D	10	Coil to Distributor Cable with 2 Terminals, 37291 D		1
37291 D	11	Coil to Distributor Cable Terminal		2
38609 DA	12	Coil Cover Mounting Washer		4
49791 D	13	Coil Cover Mounting Screw		4
47449 DAY	14	Coil Cover with Secondary Leadout, Complete		1
47453 D	15	Coil Cover Gasket		1
47413 DX	16	Distributor Cap		1
47413 DY	16	Distributor Cap 47413 DX with Brush, 21350 DXA or 32032 DXA		1
21350 DXA	17	Distributor Brush with Spring (32032 DXA will work)		1
32032 DXA	17	Distributor Brush with Spring (21350 DXA will work)		1
	18	Machine Screw, No. 8 - 32 x 1/2" Round Head (Cadium Plated)		2
		Lockwasher, No. 8 (Cadmium Plated)		2
49417 D	19	Distributor Gear Cover Felt Retainer		1
49418 D	19A	Distributor Gear Cover Felt Seal		1
49416 DX	20	Distributor Gear Cover, Complete		1
49419 D	21	Distributor Cover Gasket		1
49420 DX	22	Distributor Gear, 24 Teeth		1
47417 DX	23	Rotor Pinion		1
47452 D	24	Secondary Leadout		1
E4A 546	25	Secondary Leadout Screw		1
		Lockwasher, No. 4 (Cadmium Plated)		1
48343 D	26	Magneto Frame Expansion Plug	Magneto 501 to 45589	1
55015 D	26	Condenser Hole Cover	Magneto 45590 Up	1
		Machine Screw, No. 8 - 32 x 3/8" Round Head (Cadmium Plated)		2
		Lockwasher, No. 8 (Cadmium Plated)		2
48472 D	27	Condenser Hole Cover Gasket	Magneto 45590 Up	1
47431 DB	28	Breaker Arm, Complete		1
21388 DBX	29	Stationary Point Contact Disc and Support		1
21314 DX	30	Coil Core with 2 Machine Screws, No. 8 - 32 x 5/8" Flat Head		1
47439 DAX	30	Coil and Core, Complete		1
57926 DX	30	Coil, Complete with End Insulators		1
47442 D	31	Primary to Condenser Leadout Tube		1
49593 D	32	Coil End Insulator		2

DIESEL ENGINE

PART NUMBER	REF. NO.	DESCRIPTION	SERIAL NUMBER	NO. REQ'D
E4 226	33	Bearing Felt		1
47454 D	34	Felt Retainer, Inner		1
E4A 352	35	Rotor Shaft Ball Bearing Outer Race		2
E4A 353	36	Rotor Shaft Ball Bearing Retainer and Balls		2
E4A 351	37	Rotor Shaft Ball Bearing Inner Race		2
E4A 324	38	Oil Flinger		2
21342 D	38A	Breaker Cam Key		1
21341 D	39	Breaker Cam	Magneto 501 to 216969	1
60094 D	39	Breaker Cam	Magneto 216970 Up	1
49090 DXR	40	Rotor, Complete		1
47427 D	41	Distributor Rotor Nut		1
		Lockwasher, No. 6 (Cadmium Plated)		1
47428 D	42	Distributor Arm		1
47425 DX	43	Distributor Rotor		1
47425 DY	43 A	Distributor Rotor, Complete		1
47409 D	44	Distributor Mounting Screw		3
		Lockwasher, No. 10 (Cadmium Plated)		3
9411 DY	45	Distributor, Complete (56066 D Will Work)		1
56066 D	45	Distributor, Complete (9411 DY Will Work)		1
21394 D	46	Stationary Point Support Washer		1
47432 D	47	Spring Anchor		1
		Machine Screw, No. 8 - 32 x 3/8" Flat Head (Cadmium Plated)		1
		Hex. Nut, No. 8 - 32 (Cadmium Plated)		1
		Lockwasher, No. 8 (Cadmium Plated)		1
21393 D	48	Stationary Point Support Screw		1
47433 DX	49	Primary Leadout, Complete		1
6482 DAY	50	Frame, Complete		1
48339 D	52	Condenser Clip,		1
	51	Machine Screw, No. 8 - 32 x 1-1/4" Fillister Head (Cadmium Plated)		1
		Lockwasher, No. 8 (Cadmium Plated)		1
21409 DB	53	Condenser (Will Work for 47546 D)		1
47546 D	53	Condenser (Order 21409 DB)		1
47438 DA	54	Short Circuiting Terminal Inner Washer		1
48341 D	55	Short Circuiting Terminal Outer Washer		1
48342 DA	56	Short Circuiting Terminal Lockwasher		1

DIESEL ENGINE

PART NUMBER	REF. NO.	DESCRIPTION	SERIAL NUMBER	NO. REQ'D	
48340 DA	57	Short Circuiting Terminal		1	
E4 294	58	Rotor Shaft Ball Bearing (N.D. 15)		2	
E4A 305	59	Rotor Shim, Light		X	
E4 212	60	Rotor Shim, Medium		X	
E4A 372	61	Rotor Shim, Heavy		X	
27311 D	63	Impulse Coupling Oiler		1	
6783 DX	64	Mounting Flange, Complete		1	
	62	Machine Screw, 1/4 x 20 x 9/16" Flat Head		4	
47474 D	65	Oil Retainer Washer, Inner		1	
47475 DA	66	Oil Seal		1	
47473 D	67	Oil Retainer Washer, Outer		1	
47468 D	68	Impulse Coupling Stop Pin		1	
46785 D	69	Mounting Flange Lockwasher (Shakeproof No. 1514)		4	
4167 T	70	Rotor Shaft Key (Woodruff No. 3 - 1/8 x 1/2"		1	
47461 D	71	Pawl Pin Washer		2	
47462 D	72	Pawl Pin Snap Ring		2	
49092 D	74	Pawl		2	
49091 DX	75	Magneto Member		1	
49091 DY	76	Magneto Member with Pawls, Complete		1	
47465 D	77	Spring End Button		2	
47464 D	78	Spring Lubricating Wick		1	
47822 D	79	Magneto Coupling Spring		1	
49091 DZ	80	Rotating Unit, Complete		1	
47294 D	81	Coupling Felt Retainer		1	
49093 DX	83	Drive Member		1	
24603 D	84	Magneto Member Lockwasher		1	
	85	Lockwasher, 1/2" (Cadmium Plated)		1	
47470 D	86	Impulse Coupling Nut		1	
21372 D		Tube of Magneto Grease (Furnished When Ordered)		1	
57314 D		Magnet Keeper		1	
57755 D		Breaker Point Gauge		1	

Always give MAGNETO NUMBER when ordering Parts.

X - As Required.

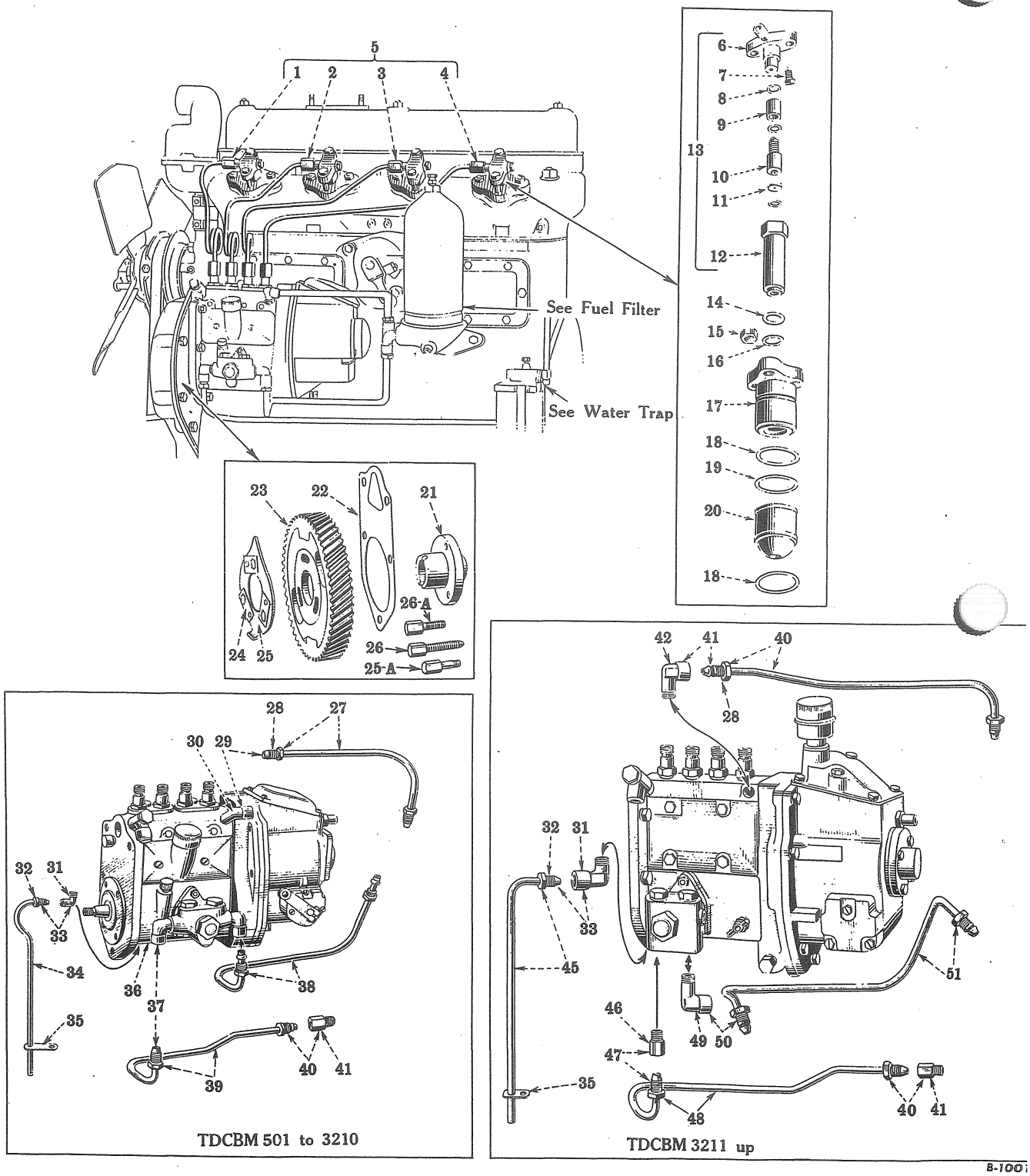

FUEL INJECTION PUMP NOZZLES, PIPES, GEAR AND CONNECTIONS

Reference numbers only are shown in illustration. Use I H C part numbers in ordering.
Unnumbered parts in the illustrations are the same as corresponding parts shown with numbers.

PART NUMBER	REF. NO.	DESCRIPTION	SERIAL NUMBER	NO. REQ'D
		FUEL INJECTION PUMP NOZZLES, PIPES, GEAR AND CONNECTIONS		
51331 DX	1	Injection Pipe with 2 Nuts and 2 Washers (No. 1 Cylinder)		1
51332 DX	2	Injection Pipe with 2 Nuts and 2 Washers (No. 2 Cylinder)		1
51333 DX	3	Injection Pipe with 2 Nuts and 2 Washers (No. 3 Cylinder)		1
51334 DX	4	Injection Pipe with 2 Nuts and 2 Washers (No. 4 Cylinder)		1
51330 D	5	Set of Fuel Injection Pipes		1
52612 D	6	Nozzle Fitting		4
		Cap Screw, 3/8" x 2" N.F. Hex Head		8
32493 D	7	Nozzle Bleeder Valve		4
37148 D	8	Nozzle Valve Gasket		12
37150 D	9	Nozzle Valve Spacer		4
37152 D	10	Nozzle Valve and Spring, Complete		4
43192 DA	11	Nozzle Injector Plate		4
42766 D	12	Nozzle Body		4
52613 D	13	Injection Nozzle, Complete		4
42767 D	14	Nozzle Body Gasket		4
31121 D	15	Nozzle Body Retainer Stud Nut		8
61208 D	16	Nozzle Body Dust Seal	TDCBM 2566 Up	4
42765 D	17	Nozzle Body Retainer (Order 42765 DAX)	TDCBM 501 to 2565	8
42765 DA	17	Nozzle Body Retainer	TDCBM 2566 up	4
42765 DAX	17	Nozzle Body Retainer with Dust Seals, 61208 D and 61209 D		
		(Will Work for 42765 D)	TDCBM 501 to 2565	1
43002 D	18	Nozzle Body Spacer Gasket		8
61209 D	19	Nozzle Body Retainer Dust Seal	TDCBM 2566 Up	4
9607 D	20	Nozzle Body Spacer (53568 D Will Work)		4
53568 D	20	Nozzle Body Spacer (9607 D Will Work)		4
8000 D	21	Fuel Injection Pump Gear Hub (Order 8000 DAX)	TDCBM 501 to 8124	1
8000 DA	21	Fuel Injection Pump Gear Hub	TDCBM 8125 up	1
8000 DAX	21	Fuel Injection Pump Gear Hub, with 3 Cap Screws, 3/8 x 1" N.F. Hex Head		
		(Will Work for 8000 D)	TDCBM 501 to 8124	1
46583 D	22	Fuel Injection Pump Gasket		1
8146 DA	23	Fuel Injection Pump Gear		1
		Cap Screw, 3/8 x 1" N.C. Hex Head	TDCBM 501 to 8124	3
		Cap Screw, 3/8" x 1" N.F. Hex. Head	TDCBM 8125 Up	3

DIESEL ENGINE

PART NUMBER	REF. NO.	DESCRIPTION	SERIAL NUMBER	NO. REQ'D
46250 D	24	Injection Pump Gear Timing Indicator Lock		3
46584 DX	25	Injection Pump Gear Timing Indicator with 3 Locks, 46250 D		1
67944 D	25A	Fuel Injection Pump Bolt (For Engines Equipped with New Type		
		Crankcase Front Plate)	TDCBM 501 to 3210	2
		Acorn Nut, 3/8" N.C. (Regular)		2
46582 D	26	Fuel Injection Pump Bolt	TDCBM 501 to 3210	1
60131 DA	26	Fuel Injection Pump Bolt		3
			TDCBM 3211 to 7949	1
		Acorn Nut, 3/8" N.C. (Regular)	TDCBM 7950 up	2
60131 DA	26A	Fuel Injection Pump Bolt (For Engines Equipped with New Type		
		Crankcase Front Plate)	TDCBM 3211 to 7949	2
		Acorn Nut, 3/8" N.C. (Regular)		2
51525 DX	27	Fuel Filter Outlet Pipe with 2 Nuts, 37165 D	TDCBM 501 to 3210	1
37165 D	28	Primary Pump Inlet Pipe Nut (Filter End)		1
37165 D	28	Primary Pump Inlet Pipe Nut (Pump End)		1
37165 D	28	Fuel Filter Inlet Pipe Nut (Filter End)		1
37165 D	28	Fuel Filter Inlet Pipe Nut (Pump End)		1
37165 D	28	Fuel Filter Outlet Pipe Nut		2
51517 DX	29	Fuel Filter Outlet Pipe Elbow with Nut, 37165 D	TDCBM 501 to 3210	1
51517 D	30	Fuel Filter Outlet Pipe Elbow	TDCBM 501 to 3210	1
30402 D	31	Injection Pump Overflow Pipe Elbow	TDCBM 1345 up	1
29898 D	32	Injection Pump Overflow Pipe Elbow Nut		1
30402 DX	33	Injection Pump Overflow Pipe Elbow with Nut, 29898 D	TDCBM 1345 up	1
54352 D	33	Injection Pump Overflow Pipe Elbow with Tube and Nut,		
		29898 D	TDCBM 501 to 1344	1
51337 DBX	34	Injection Pump Overflow Pipe with Nut, 29898 D	TDCBM 501 to 3210	1
52128 D	35	Injection Pump Overflow Pipe Clip		1
37323 D	36	Primary Pump Inlet Pipe Elbow	TDCBM 501 to 3210	1
37323 D	36	Fuel Filter Inlet Pipe Elbow (Pump End)	TDCBM 501 to 3210	1
37323 DX	37	Fuel Filter Inlet Pipe Elbow with Nut, 37165 D	TDCBM 501 to 3210	1
37323 DX	37	Primary Pump Inlet Pipe Elbow with Nut, 37165 D	TDCBM 501 to 3210	2
51518 DX	38	Fuel Filter Inlet Pipe with 2 Nuts, 37165 D	TDCBM 501 to 3210	1
51519 DX	39	Primary Pump Inlet Pipe with 2 Nuts, 37165 D	TDCBM 501 to 3210	1

DIESEL ENGINE

PART NUMBER	REF. NO.	DESCRIPTION	SERIAL NUMBER	NO. REQ'D
38026 DMX	40	Primary Pump Inlet Pipe Connector with Nut, 37165 D		
		(Water Trap End)		1
38026 DM	41	Primary Pump Inlet Pipe Connector (Water Trap End)		1
60139 DX	42	Fuel Filter Outlet Pipe with 2 Nuts, 37165 D	TDCBM 3211 Up	1
50607 DX	43	Fuel Filter Outlet Pipe Elbow with Nut, 37165 D		
		(Pump End)	TDCBM 3211 Up	1
50607 D	44	Fuel Filter Outlet Pipe Elbow (Pump End)	TDCBM 3211 Up	1
60138 DX	45	Injection Pump Overflow Pipe with Nut, 29898 D	TDCBM 3211 Up	1
38026 DM	46	Primary Pump Inlet Pipe Connector (Pump End)	TDCBM 3412 up	1
51434 D	46	Primary Pump Inlet Pipe Elbow (Pump End)	TDCBM 3211 to 3411	1
38026 DMX	47	Primary Pump Inlet Pipe Connector with Nut, 37165 D		
		(Pump End)	TDCBM 3412 up	1
51434 DX	47	Primary Pump Inlet Pipe Elbow with Nut, 37165 D		
		(Pump End)	TDCBM 3211 to 3411	1
60137 DX	48	Primary Pump Inlet Pipe (Order 60137 DAY)	TDCBM 3211 to 3411	1
60137 DAX	48	Primary Pump Inlet Pipe with 2 Nuts, 37165 D	TDCBM 3412 Up	1
60137 DAY	48	Primary Pump Inlet Pipe, 60137 DAX with Connector, 38026 DM		
		(Will Work for 60137 DX)	TDCBM 3211 to 3411	1
50607 D	49	Fuel Filter Inlet Pipe Elbow (Pump End)	TDCBM 3412 Up	1
51434 D	49	Fuel Filter Inlet Pipe Elbow (Pump End)	TDCBM 3211 to 3411	1
50607 DX	50	Fuel Filter Inlet Pipe Elbow with Nut, 37165 D		
		(Pump End)	TDCBM 3412 Up	1
51434 DX	50	Fuel Filter Inlet Pipe Elbow with Nut, 37165 D		
		(Pump End)	TDCBM 3211 to 3411	1
60140 DX	51	Fuel Filter Inlet Pipe with 2 Nuts, 37165 D		
		(Order 60140 DAY)	TDCBM 3211 to 3411	1
60140 DAX	51	Fuel Filter Inlet Pipe with 2 Nuts, 37165 D	TDCBM 3412 Up	1
60140 DAY	51	Fuel Filter Inlet Pipe, 60140 DAX with Elbow, 50607 D		
		(Will Work for 60140 DX)	TDCBM 3211 to 3411	1
21491 H		Fuel Injection Pump Bolt Lockwasher	TDCBM 7950 Up	2
21491 H		Fuel Injection Pump Bolt Lockwasher (For Engines Equipped with		
		New Type Crankcase Front Plate)	TDCBM 501 to 7949	2
59900 D		Injection Pump Over Elbow Pipe Elbow (Field Change)	TDCBM 501 to 1344	1
59900 DX		Injection Pump Overflow Pipe Elbow with Nut, 29898 D		
		(Field Change)	TDCBM 501 to 1344	1
59902 DX		Injection Pump Overflow Pipe with Nut, 29898 D		
		(Field Change)	TDCBM 501 to 1344	1
59905 D		Injection Pump Overflow Pipe Field Change Package		
		(Consisting of 1 Each 59900 DX and 59902 DX)	TDCBM 501 to 1344	1
60747 DX		Injection Pump Overflow Pipe with Nut, 29898 D		
		(Field Change)	TDCBM 501 to 2565	1
61206 D		Injection Nozzle Field Improvement Package (To be Used Where		
		Dust Conditions Cause Nozzle Body and Retainer Hard		
		to Remove)	TDCBM 501 to 2565	1

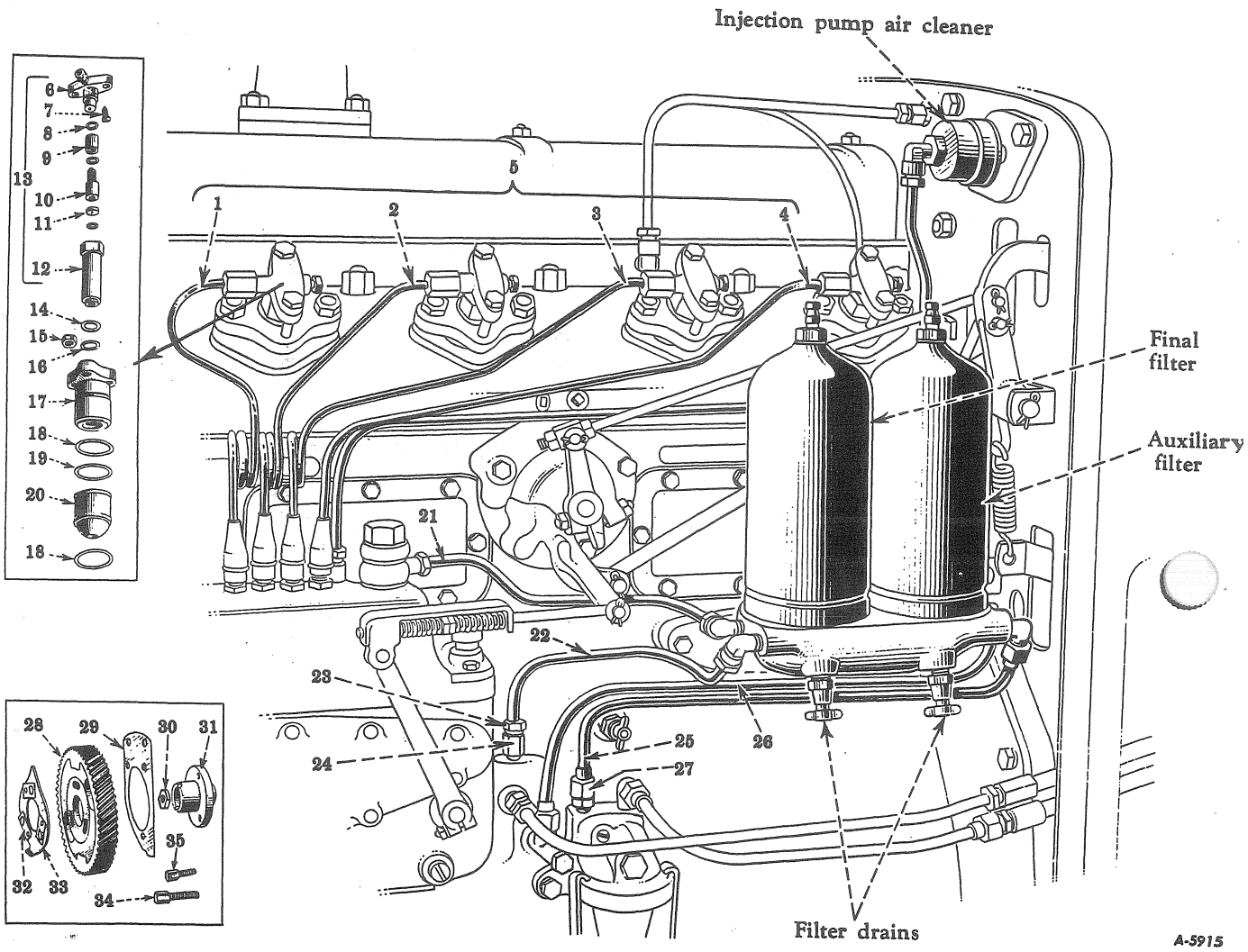

PIPES SHOWN WITHOUT REF. NOS. ARE LISTED IN THE CHASIS SECTION UNDER FUEL TANKS AND PIPING.

Reference numbers only are shown in illustration. Use I H C part numbers in ordering.
Unnumbered parts in the illustrations are the same as corresponding parts shown with numbers.

FUEL INJECTION NOZZLES, PIPES, GEAR AND CONNECTIONS

62931 DX	1	Injection Pipe with 2 Nuts and 2 Washers (Cylinder No. 1)	1	
62932 DX	2	Injection Pipe with 2 Nuts and 2 Washers (Cylinder No. 2)	1	
62933 DX	3	Injection Pipe with 2 Nuts and 2 Washers (Cylinder No. 3)	1	
62934 DX	4	Injection Pipe with 2 Nuts and 2 Washers (Cylinder No. 4)	1	
62930 D	5	Set of Fuel Injection Pipes	1	
52612 D	6	Nozzle Fitting	4	
32493 D	7	Nozzle Bleeder Valve	4	
37148 D	8	Nozzle Valve Gasket	12	

DIESEL ENGINE

PART NUMBER	REF. NO.	DESCRIPTION	SERIAL NUMBER	NO. REQ'D	
37150 D	9	Nozzle Valve Spacer		4	
37152 D	10	Nozzle Valve and Spring		4	
43192 DA	11	Nozzle Injector Plate		4	
42766 D	12	Nozzle Body		4	
		Cap Screw, 3/8 x 2" N.F. Hex Head		8	
52613 D	13	Injection Nozzle, Complete		4	
42767 D	14	Nozzle Body Gasket		4	
31121 D	15	Nozzle Body Stud Nut		8	
61208 D	16	Nozzle Body Dust Seal		4	
42765 DA	17	Nozzle Body Retainer		4	
43002 D	18	Nozzle Body Spacer Gasket		8	
61209 D	19	Nozzle Body Retainer Dust Seal		4	
9607 D	20	Nozzle Body Spacer (Order 53568 D)		4	
53568 D	20	Nozzle Body Spacer (Will Work for 9607 D)		4	
62951 DX	21	Fuel Filter Outlet Pipe with 2 Nuts, 37165 D		1	
65080 DX	21	Fuel Filter Outlet Pipe with 2 Nuts, 37165 D			
		(*Used on Modified Units Adams 80 and 86)		1	
62950 DX	22	Fuel Filter Inlet Pipe with 2 Nuts, 37165 D		1	
65079 DX	22	Fuel Filter Inlet Pipe with 2 Nuts, 37165 D			
		(*Used on Modified Units Adams 80 and 86)		1	
37165 D	23	Fuel Pipe Nuts		4	
38026 DM	24	Fuel Filter Inlet Pipe Connector (Pump End)		1	
62952 DAX	25	Auxiliary Fuel Filter Inlet Pipe with 2 Nuts and 2 Nipples		1	
65077 DAX	25	Auxiliary Fuel Filter Inlet Pipe with 2 Coupling Nuts and Nipples			
		(*Used on Modified Units Adams 80 and 86)		1	
62953 DAX	26	Auxiliary Fuel Filter Outlet Pipe with 2 Nuts and 2 Nipples		1	
65078 DAX	26	Auxiliary Fuel Filter Outlet Pipe with 2 Coupling Nuts and Nipples			
		(*Used on Modified Units Adams 80 and 86)		1	
22507 D	27	Auxiliary Fuel Filter Inlet Pipe Half-Union (Water Trap End)		1	
8146 DA	28	Fuel Injection Pump Gear		1	
		Cap Screw, 3/8 x 1" N.F. Hex Head		3	
62939 D	29	Fuel Injection Pump Gasket		1	
59676 D	30	Camshaft Nut		1	
62943 D	31	Fuel Injection Pump Gear Hub		1	
46250 D	32	Injection Pump Gear Timing Indicator Lock		1	
46584 DX	33	Injection Pump Gear Timing Indicator with 3 Locks, 46250 D		1	
62941 D	34	Injection Pump Bolt, Long		2	
64339 D	35	Injection Pump Bolt, Short		1	
		(*) - For Tabulation of Modifications see Introduction Page			

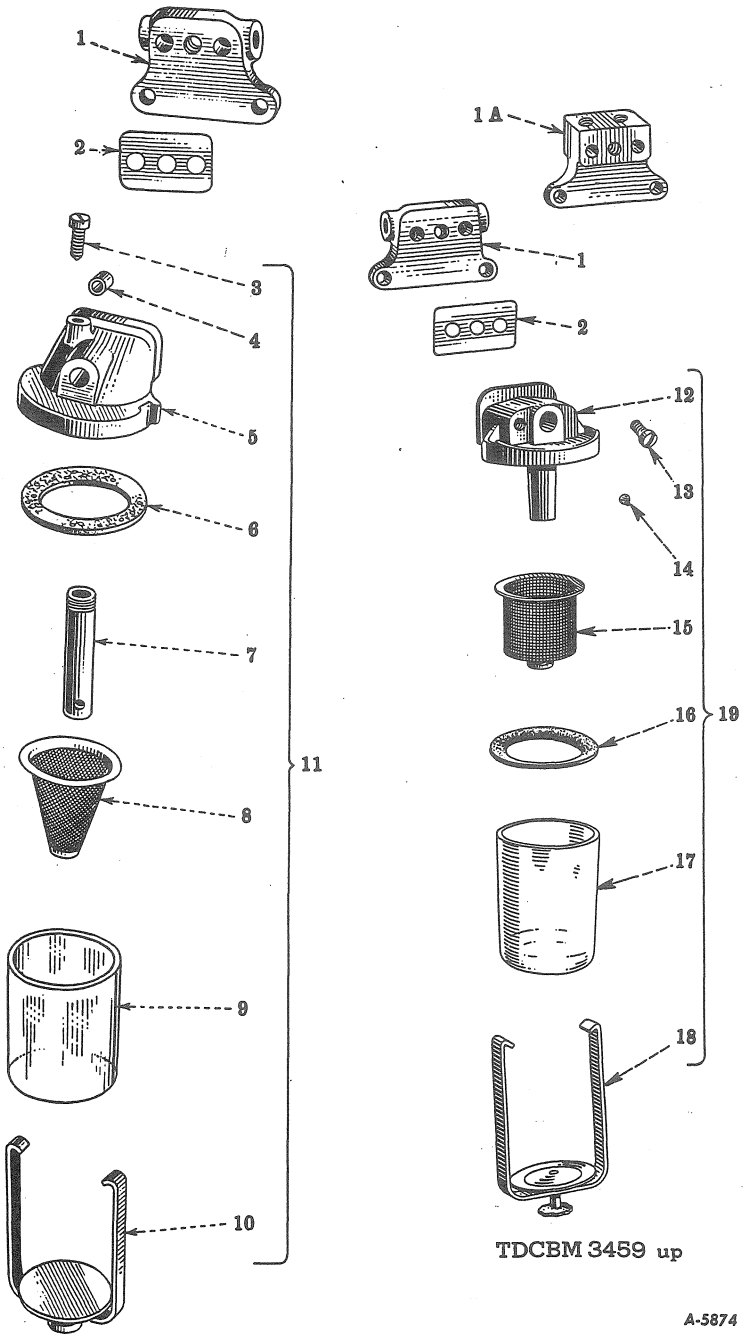

TDCBM 501 to 3458

TDCBM 3459 up

WATER TRAP

Reference numbers only are shown in illustration. Use I H C part numbers in ordering.

I H C PART NUMBER	REF. NO.	MFR'S. NUMBER	DESCRIPTION	SERIAL NUMBER	NO. REQ'D
			WATER TRAP		
8221 D	1		Water Trap Bracket		
			(For Tractors Equipped with Bosch Injection Pump)		1
			Cap Screw, 3/8" N.C. x 1 Hex Head		2
			Lockwasher, 3/8"		2
9311 D	1A		Water Trap Bracket		
			(For Tractors Equipped with IHC Injection Pump)		1
			Cap Screw, 3/8 x 1" N.C. Hex Head		2
			Lockwasher, 3/8"		2
51527 D	2		Water Trap Bracket Gasket		1
54766 D	3	43115-19	Water Trap Vent Screw (Order 60871 DA)	TDCBM 501 to 3458	1
51339 D	4	43115-17	Water Trap Top Dowel (Not Used with Top, 9118 DX)		2
54765 D	5	43115-18	Water Trap Body with 2 Dowels, 51339 D		1
			(Order 9118 DX or 9257 DX)	TDCBM 501 to 3458	1
54763 D	6	43115-15	Water Trap Bowl Gasket (Order 60876 D)	TDCBM 501 to 3458	1
54762 D	7	43115-14	Water Trap Tube	TDCBM 501 to 3458	1
54761 D	8	43115-11	Water Trap Screen	TDCBM 501 to 3458	1
54764 D	9	43115-16	Water Trap Glass Bowl (Order 60877 D)	TDCBM 501 to 3458	1
54760 D	10	43115-7	Water Trap Bail (Order 60878 DX)	TDCBM 501 to 3458	1
51338 D	11	43115	Water Trap, Complete (Imperial Brass Mf'g. Co.)		
			(Order 60870 D)	TDCBM 501 to 3459	1
			Cap Screw, 1/2 x 3" N.C. Hex. Head		1
			Lockwasher, 1/2"		1
9118 DX	12		Water Trap Top with Plug, 24805 D		
			(9257 DX will work)(Will Work for 54765D)	TDCBM 3459 Up	1
			Cap Screw, 1/2 x 3" N.C. Hex. Head		1
			Lockwasher, 1/2"		1
9257 DX	12		Water Trap Top with Plug, 20345 D and Dowel, 51339 D)		
			(9118 DX will work)(Will Work for 54765 D)	TDCBM 3459 Up	1
			Cap Screw, 1/2 x 3" N.C. Hex. Head		1
			Lockwasher, 1/2"		1
60871 DA	13		Water Trap Vent Screw (Will Work for 54766 D)	TDCBM 3459 Up	1
20345 D	14		Water Trap Top Expansion Plug, 3/8" (Steel)		
			(Used with Top, 9257 DX)	TDCBM 3459 Up	1
24805 D	14		Water Trap Top Expansion Plug, 3/8" (Brass)		
			(Used with Top, 9118 DX)	TDCBM 3459 Up	1
60872 D	15		Water Trap Screen	TDCBM 3459 Up	1
60876 D	16		Water Trap Bowl Gasket (Will Work for 54763D)	TDCBM 3459 Up	1
60877 D	17		Water Trap Glass Bowl (Will Work for 54764 D)	TDCBM 3459 Up	1
60878 DX	18		Water Trap Bail (Will Work for 54760 D)	TDCBM 3459 Up	1
60870 D	19		Water Trap, Complete (Will Work for 51338 D)	TDCBM 3459 Up	1

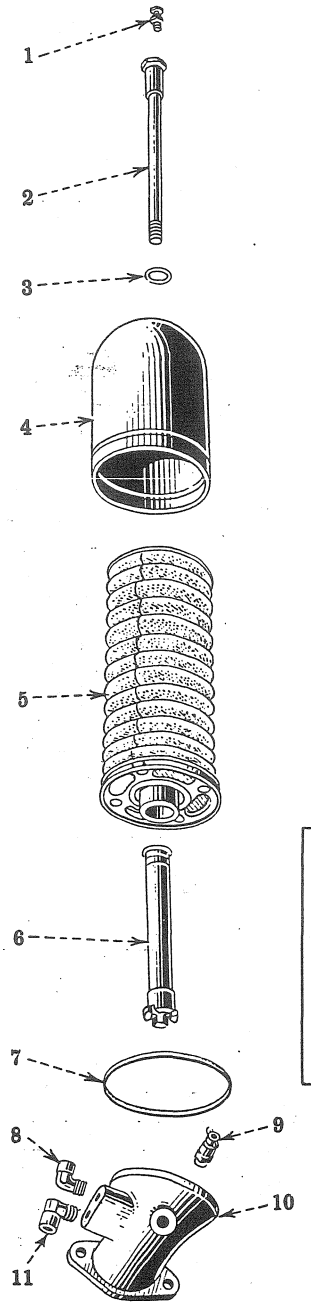

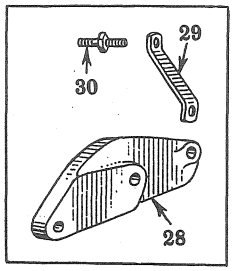

Modified Units

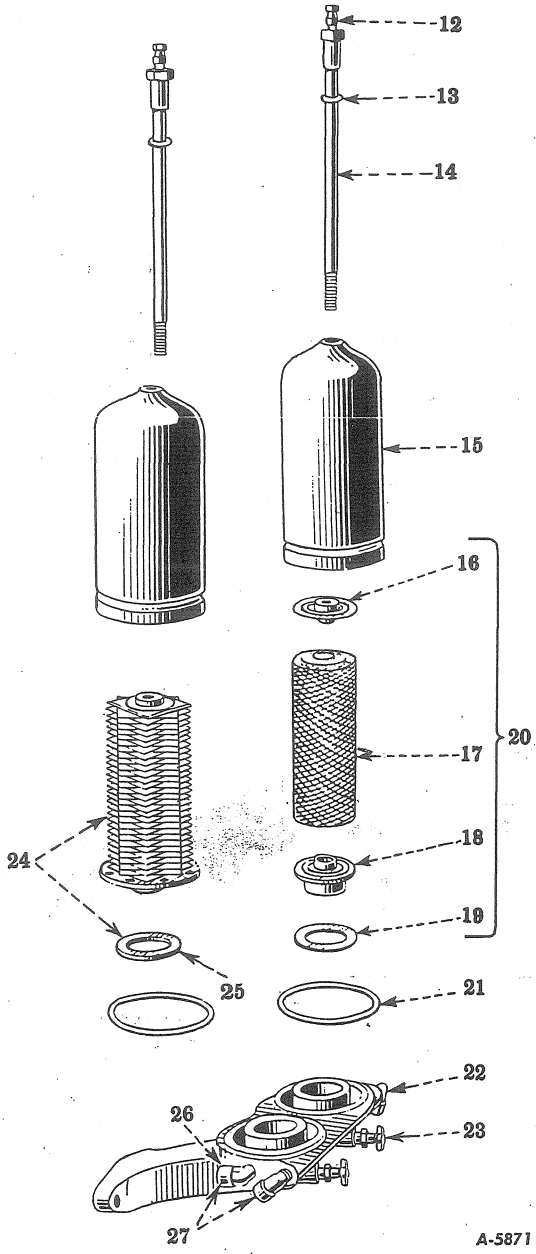

FUEL OIL FILTER
(For Engines Equipped with Bosch Fuel Injection Pump)

AUXILIARY AND FINAL FUEL OIL FILTERS
(For Engines Equipped with I.H.C. Fuel Injection Pump)

Reference numbers only are shown in illustration. Use I H C part numbers in ordering.
Unnumbered parts in the illustrations are the same as corresponding parts shown with numbers.

FUEL OIL FILTER
(For Engines Equipped with Bosch Fuel Injection Pump)

I H C PART NUMBER	REF. NO.	MFR'S. NUMBER	DESCRIPTION	SERIAL NUMBER	NO. REQ'D
39677 D	1		Fuel Oil Filter Bleeder		1
46591 D	2		Fuel Oil Filter Case Stud		1
13727 D	3		Fuel Oil Filter Case Stud Gasket		1
13729 D	4		Fuel Oil Filter Case		1
46589 D	5		Fuel Oil Filter Cloth Element		1
28809 D	6		Fuel Oil Filter Metal Element		1
13728 D	7		Fuel Oil Filter Case Gasket		1
37323 D	8		Fuel Oil Filter Inlet Pipe Elbow	TDCBM 501 to 3210	1
37323 DX	8		Fuel Oil Filter Inlet Pipe Elbow with Nut, 37165D	TDCBM 501 to 3210	1
51434 D	8		Fuel Oil Filter Inlet Pipe Elbow	TDCBM 3211 up	1
51434 DX	8		Fuel Oil Filter Inlet Pipe Elbow with Nut, 37165D	TDCBM 3211 Up	1
9982 T	9		Fuel Oil Filter Drain Cock		1
8222 D	10		Fuel Oil Filter Base (Order 8222 DAX)	TDCBM 501 to 5289	1
8222 DA	10		Fuel Oil Filter Base	TDCBM 5290 Up	1
			Cap Screw, 1/2 x 1-1/2" N.C. Hex Head		2
			Lockwasher, 1/2"		2
8222 DAX	10		Fuel Oil Filter Base, Complete		
			(Will Work for 3222 D)	TDCBM 501 to 5289	1
37323 D	11		Fuel Oil Filter Outlet Pipe Elbow		1
37323 DX	11		Fuel Oil Filter Outlet Pipe Elbow with Nut, 37165 D		1
52319 DB			Fuel Oil Filter Drip Pan		
			(Tractors with Starting Motor - Special)		1

AUXILIARY AND FINAL FUEL OIL FILTERS
(For Engines Equipped with I.H.C. Fuel Injection Pump)

PART NUMBER	REF. NO.	DESCRIPTION	SERIAL NUMBER	NO. REQ'D
39677 D	12	Fuel Oil Filter Bleeder ✓ 1		2
13727 D	13	Fuel Oil Filter Case Stud Gasket		2
46591 DA	14	Fuel Oil Filter Case Stud		2
13729 D	15	Fuel Oil Filter Case		2
62948 D	16	Auxiliary Fuel Oil Filter Top Plate		1
62946 DA	17	Auxiliary Fuel Oil Filter Element ✓ 2		1
64520 DA	18	Auxiliary Fuel Oil Filter Bottom Plate		1
64521 D	19	Auxiliary Fuel Oil Filter Bottom Plate Gasket ✓ 1		1
62945 DA	20	Auxiliary Fuel Oil Filter Element, Complete		1
13728 D	21	Fuel Oil Filter Case Gasket ✓ 1		2
22510 D	22	Auxiliary Fuel Oil Filter Inlet and Outlet Pipe Elbow (Filter End)		2
9982 T	23	Fuel Oil Filter Drain Cock		2
62949 D	24	Final Fuel Oil Filter Element with Gasket, 68090 D		1
68090 D	25	Final Fuel Oil Filter Bottom Plate Gasket		1
9310 D	26	Fuel Oil Filter Base		1
		Cap Screw, 1/2 x 1-1/2" N.C. Hex Head		2
		Lockwasher, 1/2"		2
9361 D	26	Fuel Oil Filter Base (Order 9709 DM) (⊛ Used on Modified Units Adams 80)		1
9709 DM	26	Fuel Oil Filter Base (⊛ Used on Modified Units Adams 80 and 86)		1
37323 D	27	Final Fuel O'l Filter Inlet and Outlet Pipe Elbow (Filter End)		2
9472 D	28	Fuel Oil Filter Base Spacer (⊛ Used on Modified Units Adams 80 and 86)		1
63436 D	29	Fuel Oil Filter Base Brace (⊛ Used on Modified Units Adams 80 and 86)		1
68399 DM	30	Fuel Oil Filter Base Brace Screw (⊛ Used on Modified Units Adams 80 and 86)		1
65069 D		Fuel Oil Filter Drip Pan		1
		Cap Screw, 5/16 x 1/2" N.C. Hex Head		2
		Lockwasher, 5/16"		2
		Washer, 11/32" I.D. x 11/16" O.D. x No. 16 Ga.		2
		⊛ - For Tabulation of Modifications see Introduction Page		

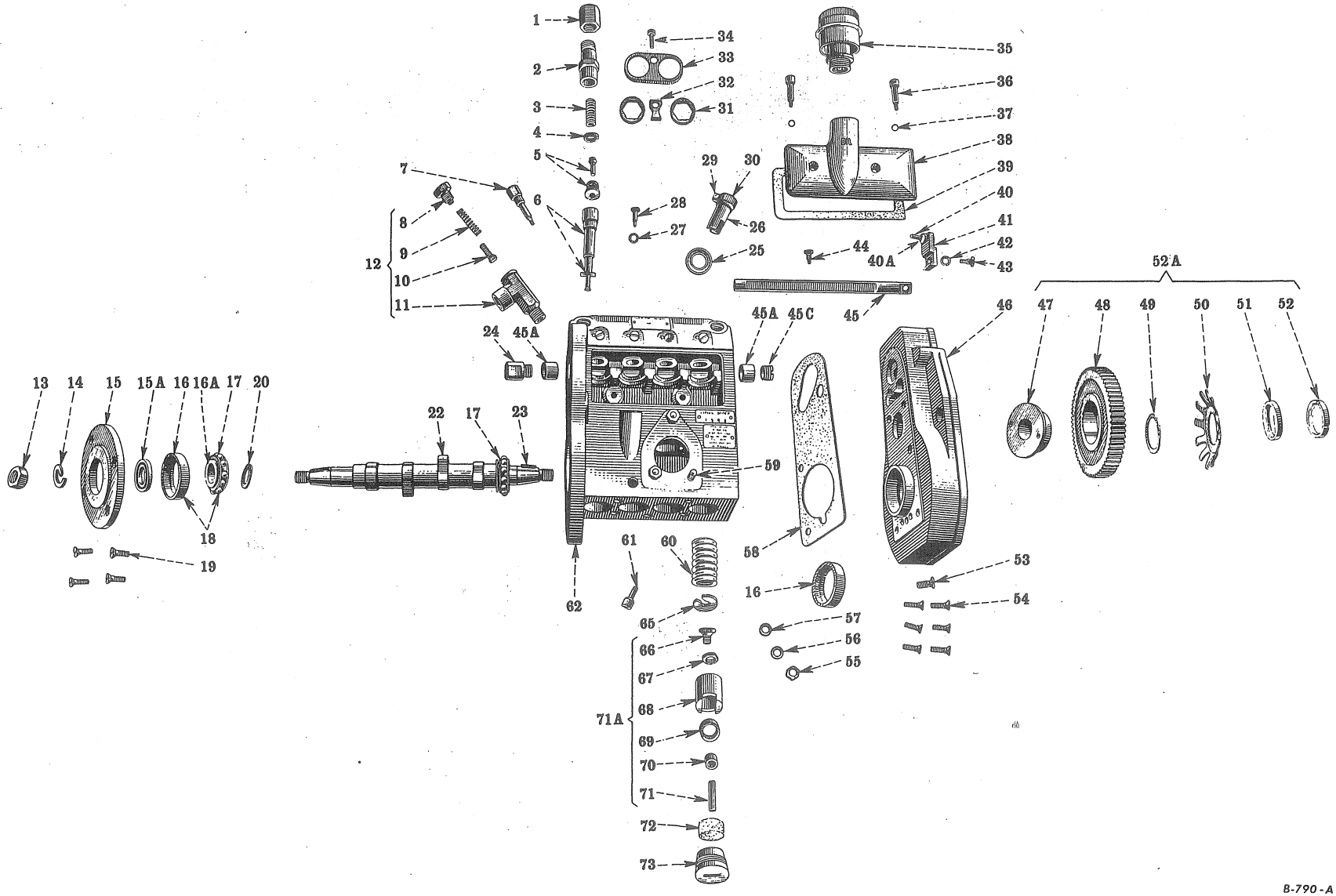

B-790-A

AMERICAN BOSCH FUEL INJECTION PUMP —Engines TDCBM 501 to 3210

Reference numbers only are shown in illustrati[illegible] Use I H C part numbers in ordering.

Unnumbered parts in the illustrations are the sam[illegible] rresponding parts shown with numbers.

PRINTED IN UNITED STATES OF AMERICA

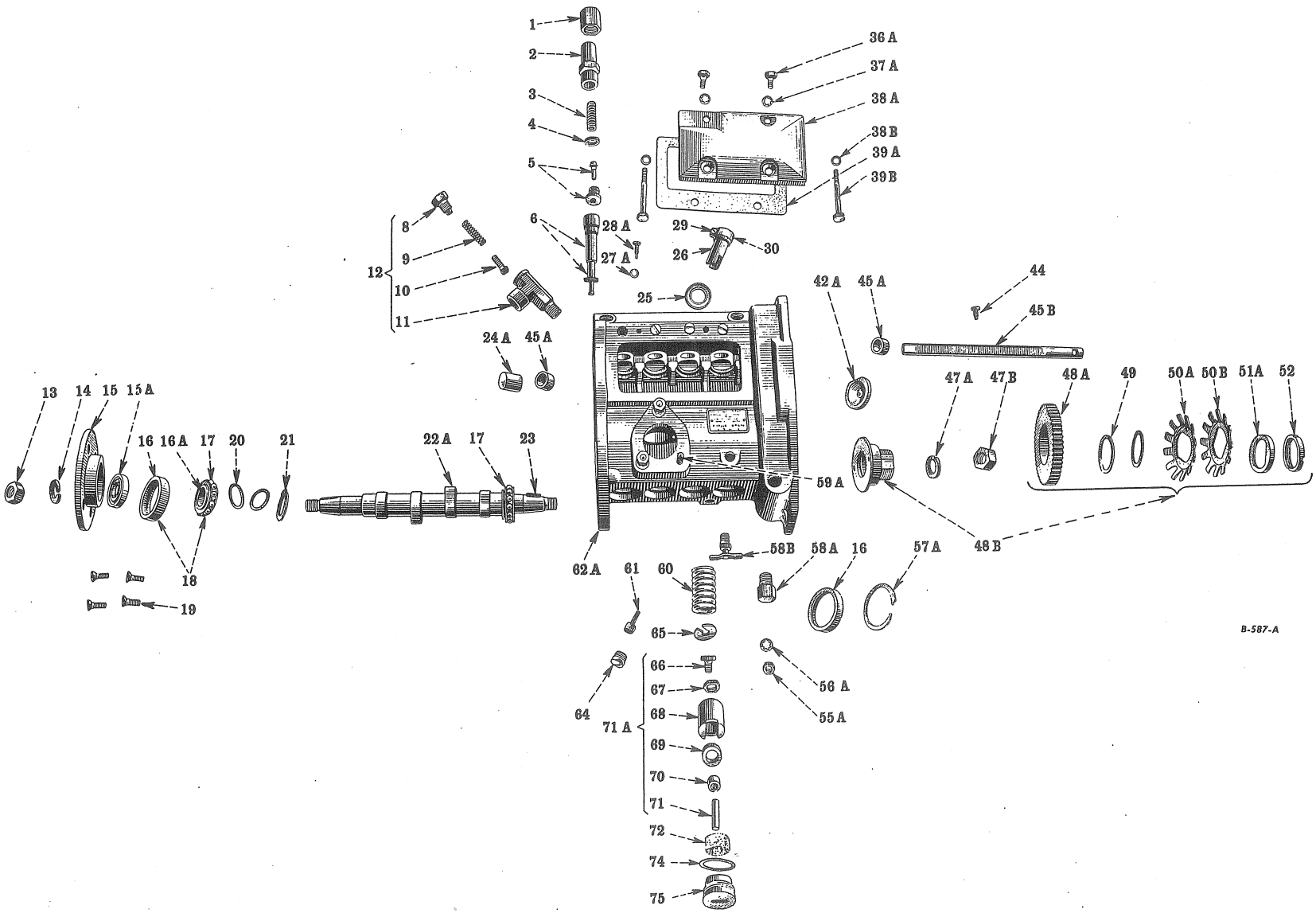

AMERICAN BOSCH FUEL INJECTION PUMP —Engines TDCBM 3211 up

Reference numbers only are shown in illustration. Use I H C part numbers in ordering.
Unnumbered parts in the illustrations are the same as corresponding parts shown with numbers.

I H C PART NUMBER	REF. NO.	MFR'S. NUMBER	DESCRIPTION	SERIAL NUMBER	NO. REQ'D
			AMERICAN BOSCH FUEL INJECTION PUMP		
51526 DBX14		DJN 76 139	Fuel Injection Pump, Complete (Type "A")	TDCBM 501 to 3210	1
			Cap Screw, 3/8" x 1-1/2" N.C. Hex. Head		1
			Cap Screw, 3/8" x 1-1/8" N.C. Hex. Head		
			(For Engines Equipped with Old Type Crankcase Front Cover)		2
			Cap Screw, 3/8" x 2-1/2" N.C. Hex. Head		1
			Lockwasher, 3/8"		
			(For Engines Equipped with Old Type Crankcase Front Cover)		2
			Lockwasher, 3/8"		2
			Washer, 13/32" I.D. x 3/4" O.D. x No. 16 Ga.		
			(Q 1597)		3
54287 D			Pump Unit, Complete, APE 4A 80N 320S 511	TDCBM 501 to 2456	1
60022 DX14			Fuel Injection Pump, Complete (Type "K")	TDCBM 3211 Up	1
			Cap Screw, 3/8" x 1" N.C. Hex. Head (For Engines Equipped with		
			Old Type Crankcase Front Cover)	TDCBM 3211 to 7949	2
			Cap Screw, 3/8" x 1-3/8" N.C. Hex. Head		1
			Cap Screw, 3/8" x 2-3/4" N.C. Hex Head		1
			Lockwasher, 3/8" (For Engines Equipped with Old Type		
			Crankcase Front Cover)	TDCBM 3211 to 7949	2
			Lockwasher, 3/8"		2
61242 D			Pump Unit, Complete, APE 4A 80N 320S 511F	TDCBM 2457 to 3210	1
61908 D			Pump Unit, Complete, APE 40A 80P 320K 600	TDCBM 3211 Up	1
40255 D	1	WMU 9A 2X	Delivery Valve Holder Protection Cap		4
54320 D	2	HP 7624	Delivery Valve Holder		4
54329 D	3	SP 7617	Delivery Valve Spring		4
55361 D	4	NNP 2021/3X	Delivery Valve Holder Gasket		4
54326 D	5	VA 7636A	Delivery Valve and Seat		4
54336 D	6	BC 7635/3A	Plunger and Barrel		4
54317 D	7	PRV 27/2X	Inspection Cover Fastening Screw Stud	TDCBM 501 to 3210	2
			OVERFLOW VALVE UNIT CONSISTS OF ITEMS 8 TO 12		
54374 D	8	SC 7630	Valve Screw		1
40401 D	9	WSF 2177/1X	Valve Spring		1
40399 DA	10	PVE 48A 1X	Valve Proper		1
54373 DB	11	VA 7923	Valve Body		1
54372 DB	12	VA 7613A	Overflow Valve, Complete		1
54290 D	13	WMU 511/2X	Camshaft Hex. Nut		1
	14	WA 5-16	Lockwasher, 1/2"		1
54294 DAX	15	PL 7623A	End Plate with Oil Seal, 54295 D (68613 DX Will Work)		1
68613 DX	15	PL 7655 A	End Plate with Oil Seal, 54295 D (54294 DAX Will Work)		1
54295 D	15A	PK 764	End Plate Oil Seal		1
64960 D	16	NIR 6/17 X	Camshaft Bearing Outer Race		2
64959 D	16A	NAR 6/17 X	Camshaft Bearing Inner Race		2
64961 D	17	NFK 6/17Z	Camshaft Bearing Retainer with Balls		2
54292 D	18	RB 761A	Camshaft Bearing, L.H. (Order 54293 D)		1
54293 D	18	NKL 6/17Z	Camshaft Bearing, L.H. and R.H. (N.D. 17H)		
			(64959 D, 60 and 61 D)(Will Work for 54292 D)		2
40216 D	19	NSR 734/19X	End Plate Fastening Screw		4

I H C PART NUMBER	REF. NO.	MFR'S. NUMBER	DESCRIPTION	SERIAL NUMBER	NO. REQ'D
54296 D	20	WMS 101/11X	Bearing Adjusting Washer, o. 1M/M		X
54297 D	20	WMS 101/27X	Bearing Adjusting Washer, o. 2M/M		X
54298 D	20	WMS 101/25X	Bearing Adjusting Washer, o. 3M/M		X
56113 D	21	WMS 2215/1X	Camshaft Oil Thrower	TDCBM 3211 Up	1
54289 D	22	PAC 58/2X	Camshaft	TDCBM 501 to 3210	1
61911 D	22A	SH 7632	Camshaft	TDCBM 3211 Up	1
		WA5-16CA	Lockwasher, 1/2"		1
54291 D	23	NKE 5/1X	Camshaft Key (Woodruff No.)		1
54305 D	24	CV 7667	Control Rod Protection Cover	TDCBM 501 to 3210	1
61965 D	24A	CV 76108	Control Rod Protection Cover	TDCBM 3211 Up	1
54334 D	25	PMS 7/2X	Plunger Spring Seat, Upper		4
54330 D	26	PMB 3/2X	Control Sleeve		4
54343 D	27	WNS 2034/4X	Barrel Set Screw Gasket	TDCBM 501 to 3210	4
62123 D	27A	GA 7615	Barrel Set Screw Gasket	TDCBM 3211 Up	4
54342 D	28	WSR 2099/3X	Barrel Set Screw	TDCBM 501 to 3210	4
61969 D	28A	SC 7660	Barrel Set Screw	TDCBM 3211 Up	4
54332 D	29	WSR 2100/2X	Toothed Segment Clamping Screw		4
54331 D	30	PZR 44/1X	Toothed Segment		4
54322 D	31	RG 762	Delivery Valve Holder Locking Ring	TDCBM 501 to 3210	4
54323 D	32	KY 761	Delivery Valve Holder Locking Key	TDCBM 501 to 3210	2
54321 D	33	CV 768	Delivery Valve Holder Locking Cover	TDCBM 501 to 3210	2
54324 D	34	SC 7616	Delivery Valve Holder Securing Screw	TDCBM 501 to 3210	2
54308 DX	35	CV 7635 A	Pump Housing Breather, Complete (Order 60740 D)	TDCBM 501 to 2456	1
60740 D	35	CV 76126 A	Pump Housing Breather, Complete		
			(Will Work for 54308 DX)	TDCBM 2457 to 3210	1
54315 D	36	SC 7625	Inspection Cover Fastening Screw	TDCBM 501 to 3210	2
62120 D	36A	SC 1119-1	Inspection Cover Fastening Screw, Short	TDCBM 3211 Up	2
54316 D	37	NMR 11/3X	Inspection Cover Fastening Screw Spring Washer	TDCBM 501 to 3210	2
52745 V	37A	WA 22-8CA	Inspection Cover Fastening Screw Lockwasher		
			(Shakeproof No. 1214) (Same as 40753 D)	TDCBM 3211 Up	2
54313 DA	38	CV 7669	Inspection Cover (Order 67761 D)	TDCBM 501 to 2456	1
60738 D	38	CV 76125	Inspection Cover	TDCBM 2457 to 3210	1
62115 D	38A	CV 76109	Inspection Cover	TDCBM 3211 Up	1
62122 D	38B	GA 7613	Inspection Cover Long Fastening Screw Gasket		
			(Order 67870 D)	TDCBM 3211 Up	2
67870 D	38B	GA 7616	Inspection Cover Long Fastening Screw Gasket		
			(Will Work for 62122 D)	TDCBM 3211 Up	2
54314 DB	39	GA 76121	Inspection Cover Gasket	TDCBM 501 to 3210	1
62118 D	39A	GA 76111	Inspection Cover Gasket	TDCBM 3211 Up	1
62121 D	39B	SC 7661	Inspection Cover Fastening Screw, Long	TDCBM 3211 Up	2

X - As Required

DIESEL ENGINE

I H C PART NUMBER	REF. NO.	MFR'S. NUMBER	DESCRIPTION	SERIAL NUMBER	NO. REQ'D
54464 D	40	PN 7917	Control Rod Linkage Pin	TDCBM 501 to 3210	1
54530 D	40A		Control Rod Linkage Pin Lockwasher		
			(Order 67980 H)	TDCBM 501 to 3210	1
67980 H	40A	WA 22-6	Control Rod Linkage Pin Lockwasher		
			(Shakeproof No. 1212) (Same as 54530 D)	TDCBM 501 to 3210	1
54460 D	41	HP 795	Control Rod Extension Arm	TDCBM 501 to 3210	1
54530 D	42		Control Rod Securing Screw Lockwasher		
			(Order 67980 H)	TDCBM 501 to 3210	1
67980 H	42	WA 22/6	Control Rod Securing Screw Lockwasher		
			(Shakeproof No. 1212) (Same as 54530 D)	TDCBM 501 to 3210	1
61959 DX	42A	BA 791	Pump Housing Baffle with Button	TDCBM 3211 Up	1
54468 DA	43	SC 7937	Control Rod Securing Screw	TDCBM 501 to 3210	1
54306 D	44	WSR 2125/1X	Control Rod Securing Screw		1
54304 D	45	RD 7638	Control Rod	TDCBM 501 to 3210	1
54299 D	45A	BG 763	Control Rod Bushing		2
61963 D	45B	RD 7689	Control Rod	TDCBM 3211 Up	1
54303 D	45C	BG 765	Control Rod Bushing, R.H.	TDCBM 501 to 3210	1
54384 D	46	HG 7938	Governor Housing	TDCBM 501 to 3210	1
54409 DA	47	HB 793	Drive Gear Hub	TDCBM 501 to 3210	1
	47A	WA5-16CA	Lockwasher, 1/2" (Cadmium Plated)		
			(Drive Gear Hub)	TDCBM 3211 Up	1
62199 D	47B	NT 7921	Drive Gear Hub Nut	TDCBM 3211 Up	1
54410 DA	48	GE 791	Drive Gear	TDCBM 501 to 3210	1
62195 D	48A	GE 7919	Drive Gear	TDCBM 3211 Up	1
62193 D	48B	GE 7918A	Drive Gear, Complete	TDCBM 3211 Up	1
54411 D	49	SR 794/1	Adjusting Spacer, .035"		X
54412 D	49	SR 794/2	Adjusting Spacer, .049"		X
54413 D	49	SR 794/3	Adjusting Spacer, .065"		X
62622 D	49	SR 794/4	Adjusting Spacer, .020"	TDCBM 3211 Up	X
54414 DA	50	DC 791	Governor Drive Spring Disc	TDCBM 501 to 3210	1
62196 D	50A	DC 792	Drive Gear Spring Disc, Inner	TDCBM 3211 Up	1
62197 D	50B	DC 795	Drive Gear Spring Disc, Outer	TDCBM 3211 Up	1
54415 D	51	WA 795	Gear Adjusting Nut Lockwasher	TDCBM 501 to 3210	1
62198 D	51A	WA 7918	Drive Gear Adjusting Nut Lockwasher	TDCBM 3211 Up	1
54416 D	52	NT 795	Gear Adjustng Nut		1
54408 DA	52A	GE 7921 A	Drive Gear, Complete	TDCBM 501 to 3210	1
54385 D	53	NSR 736/20X	Governor Housing Securing Screw, Upper	TDCBM 501 to 3210	1
40298 D	54	NSR 494/22X	Governor Housing Securing Screw, Lower	TDCBM 501 to 3210	4
40217 D	55	NT 762	Pump Housing Securing Nut	TDCBM 501 to 3210	3
	55A	NT5-8CA	Hex. Nut, 1/4" N.C.		3
	56	NMS 412/1X	Lockwasher, 1/4"		3

X - As Required

DIESEL ENGINE

I H C PART NUMBER	REF. NO.	MFR'S. NUMBER	DESCRIPTION	SERIAL NUMBER	NO. REQ'D
52745 V	56A	WA 22-8CA	Fuel Supply Pump Housing Lockwasher		
			(Shakeproof No. 1214, (Same as 40753 D)	TDCBM 3211 Up	1
40208 D	57	NMS 601/2X	Pump Housing Securing Washer	TDCBM 501 to 3210	3
61917 D	57A	RG 767	Bearing Retainer Ring	TDCBM 3211 Up	1
54387 DB	58	GA 7984	Governor Housing Gasket	TDCBM 501 to 3210	1
61958 D	58A	PG 7617	Lubricating Oil Drain Plug	TDCBM 3211 Up	1
59708 D	58B	FI 765	Lubricating Oil Level Cock	TDCBM 3211 Up	1
40244 D	59	WBO 2141/1X	Fuel Supply Pump Stud	TDCBM 501 to 3210	3
61956 D	59A	SD 7610	Fuel Supply Pump Stud	TDCBM 3211 Up	3
54333 DA	60	WSF 2205A 400X	Plunger Spring		4
57503 DX	61	FI 7625A	Lubricating Oil Overflow Tube with Plug	TDCBM 1345 Up	1
54300 DBX	62	HG 76164A	Pump Housing, Complete	TDCBM 1345 to 3210	1
		NSR 1A 2X	Pipe Plug, 1/4" Slotted Head (Cadmium Plated)		1
54300 DBY	62		Pump Housing, 54300 DBX with Elbow, 30402 DX and		
			Tube, 57503 DX (Will Work for 54300 DX and DAX)	TDCBM 501 to 1344	1
61918 DX	62A	HG 76185 A	Pump Housing, Complete	TDCBM 3211 Up	1
			Pipe Plug, 3/8" (Cadmium Plated)		2
61962 D	64	NSR 1A 2X	Lubricating Oil Overflow Plug, Outer	TDCBM 3211 Up	1
54335 D	65	PMS 6/1X	Plunger Spring Seat, Lower		4
54346 D	66	PSR 3/1X	Tappet Screw		4
54347 D	67	WMU 2066/2X	Tappet Screw Lock Nut		4
54348 DBX	68	PKB 41A1X	Tappet Shell with Insert		4
54351 D	69	PRL 1/3X	Tappet Roller		4
54350 D	70	PMB 4/1X	Tappet Roller Bushing		4
54349 D	71	PBO 1/1X	Tappet Pin		4
54345 DA	71A	PKB 41A1Z	Tappet, Complete		4
54481 D	72	PPT 22/2X	Felt Cushion		4
54358 D	73	PVU 2/1X	Closing Plug	TDCBM 501 to 3210	4
61970 D	74	WMR 2041/405X	Closing Plug Gasket	TDCBM 3211 Up	4
62124 D	75	PG 7614	Closing Plug	TDCBM 3211 Up	4
29899 D			Oil Level Equalizing Tube Nut	TDCBM 501 to 3210	2
35252 D			Oil Level Equalizing Tube Connector	TDCBM 501 to 1344	1
35252 DX			Oil Level Equalizing Tube Connector with Nut,		
			29899 D	TDCBM 501 to 1344	1
40211 D		NP 7618	Lubricating Instruction Plate	TDCBM 501 to 3210	1
40329 DA		SC 150-2CA	Lubricating Instruction Plate Drive Rivet	TDCBM 501 to 3210	2
40329 DA		SC 150-2CA	Name Plate Drive Rivet		2
40329 DA		SC 150-2CA	Firing Order Designation Plate Drive Rivet	TDCBM 501 to 3210	2

DIESEL ENGINE

I H C PART NUMBER	REF. NO.	MFR'S. NUMBER	DESCRIPTION	SERIAL NUMBER	NO. REQ'D
54301 D		BG 7625	Lubricating Oil Gauge Rod Bushing	TDCBM 501 to 1344	1
54307 DA		CV 7668A	Inspection Cover, Complete (Order 67761 D)	TDCBM 501 to 1344	1
54318 DAX		RD 7644 A	Lubrication Oil Gauge Rod with Knob		
			(Order 59911 D)	TDCBM 501 to 1344	1
54344 D		PG 763	Barrel Set Screw Lead Plug	TDCBM 501 to 3210	4
54357 D		NP 7643	Firing Order Designation Plate	TDCBM 501 to 3210	1
54359 D		SC 7639	Fuel Sump Sealing Plug (L.H. Side or Pump)	TDCBM 501 to 3210	1
54386 D		SC 7641	Governor Housing Securing Plug	TDCBM 501 to 3210	1
55775 D		WMS 2055/2X	Lubricating Oil Overflow Retaining Screw Gasket	TDCBM 501 to 1344	1
55776 D		SC 7651	Lubricating Oil Overflow Retaining Screw	TDCBM 501 to 1344	1
56576 D		SR 762	Lubricating Oil Overflow Retaining Screw Gasket	TDCBM 501 to 1344	1
57505 DX		RD 7682A	Lubricating Oil Gauge Rod with Knob		
			(Order 59911 D)	TDCBM 1345 to 2456	1
57506 D		BG 7634	Lubricating Oil Gauge Rod Bushing	TDCBM 1345 to 2456	1
57507 D		SC 7657	Lubricating Oil Drain Plug	TDCBM 501 to 3210	1
57508 D		GA 76100	Lubricating Oil Drain Plug Gasket	TDCBM 501 to 3210	1
57508 D		GA 76100	Oil Level Equalizing Tube Connector Gasket	TDCBM 1345 to 3210	1
59905 D			Bosch Injection Pump Overflow Pipe Field Change		
			Package (Includes One Each of 59900 D and		
			59901 DX)	TDCBM 501 to 1344	1
59911 D			Pump Housing Oil Gauge Hole Plug		
			(Will Work for 54318 DAX and 57505 DX)	TDCBM 501 to 2456	1
60732 D			Bosch Type "A" Injection Pump Improvement Package		
			(Improved Gasket Sealing, Breather Action to		
			Maintain Proper Oil Level and Eliminate		
			Slippage of Friction Clutch)	TDCBM 501 to 2456	1
60742 DAX			Oil Level Equalizing Tube with 2 Nuts, 29899 D	TDCBM 501 to 3210	1
60744 D			Lubricating Oil Drain Fitting	TDCBM 1345 to 3210	1
60744 DX			Lubricating Oil Drain Fitting and Nut, 29899 D	TDCBM 1345 to 3210	1
61957 D		PG 7625	Fuel Line Closing Plug (Order 3/8" Standard Pipe Plug)		
			(Cadmium Plated)	TDCBM 3211 Up	2
62194 D		HB 796	Drive Gear Hub (Order 62193 D Ref. 48 B)	TDCBM 3211 Up	1
65374 D			Bosch Type "K" Injection Pump Field Change Package		
			(For Changing Over Type "A" Pumps)	TDCBM 501 to 3210	1
67761 D			Inspection Cover, 60738 D with Gasket, 54314 DB and		
			Breather, 60740 D (Will Work for		
			54307 DA or 54313 DA)	TDCBM 501 to 1344	1
69413 D		GA 76157	End Plate Gasket (Used Only with 68613 DX)		1

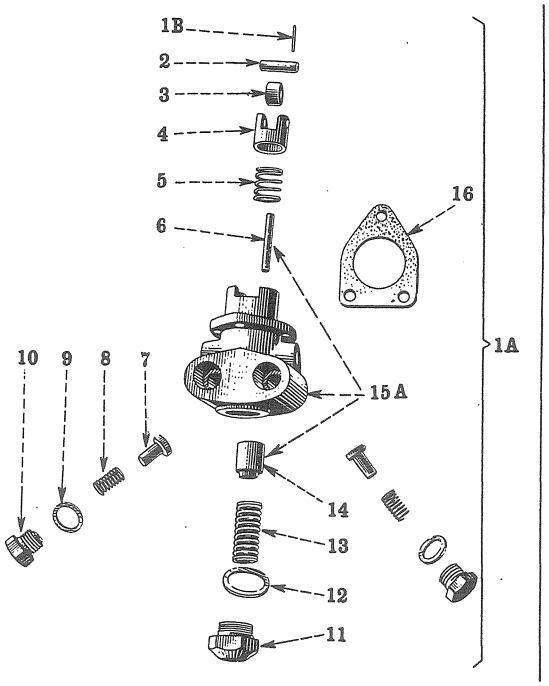

Engines TDCBM 3211 up

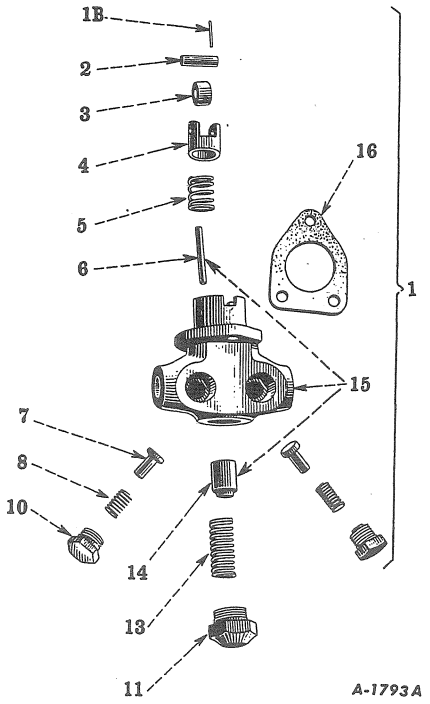

Engines TDCBM 501 to 3210

Reference numbers only are shown in illustration. Use I H C part numbers in ordering.
Unnumbered parts in the illustrations are the same as corresponding parts shown with numbers.

AMERICAN BOSCH FUEL SUPPLY PUMP

I H C PART NUMBER	REF. NO.	MFR'S. NUMBER	DESCRIPTION	SERIAL NUMBER	NO. REQ'D	
54360 D	1	AFP/K16/65	Fuel Supply Pump, Complete (Order 69332 D)	TDCBM 501 to 3210	1	
62125 D	1A	AFP/K16NK 522	Fuel Supply Pump, Complete	TDCBM 3211 Up	1	
43189 D	1B	PN 797	Tappet Securing Pin		1	
40388 D	2	WBO 2174/1X	Tappet Wrist Pin		1	
40390 D	3	WRL 2004/1X	Tappet Roller		1	
40386 D	4	PVE 46/1X	Tappet Shell		1	
40395 D	5	WSF 2197A1X	Tappet Spring		1	
54370 D	6	WBO 2140/2X	Spindle (Order 69332 D)	TDCBM 501 to 3210	1	
54370 D	6	WBO 2140/2X	Spindle (Order 62126 DY)	TDCBM 3211 Up	1	
40385 D	7	PVE 45/1X	Valve, Inlet and Outlet		2	
54371 D	8	WSF 2196/4X	Valve Spring		2	
62129 D	9	WMR 2041/404X	Valve Spring Retainer Screw Gasket	TDCBM 3211 Up	2	
40397 D	10	WVU 2097/1X	Valve Spring Retainer Screw		2	
54367 D	11	SC 7919A	Plunger Spring Retainer Screw with Plug		1	
61111 D	12	WMR 2041/2X	Plunger Spring Retainer Screw Gasket	TDCBM 3211 Up	1	
54366 D	13	WSF 2216A/1X	Plunger Spring		1	
54365 D	14	PKB 45/1X	Plunger (Order 69332 D)	TDCBM 501 to 3210	1	
54365 D	14	PKB 45/1X	Plunger (Order 62126 DY)	TDCBM 3211 Up	1	
54361 DY	15	HG 7940A	Fuel Supply Pump Housing,			
			(Plunger and Spindle, Complete)(Order 69332 D)	TDCBM 501 to 3210	1	
62126 DY	15A	HG 7965A	Fuel Supply Pump Housing,			
			Plunger and Spindle, Complete	TDCBM 3211 Up	1	
54364 DB	16	GA 76120	Fuel Supply Pump Housing Gasket		1	
69332 D			Fuel Supply Pump Replacement Package			
			(Will Work for 54360D, 54361DY, 54365D or 54370D)			
			(See "Details of Assembly" For List of the Parts)	TDCBM 501 to 3210	1	

Always give PUMP SERIAL NUMBERS when ordering Parts.

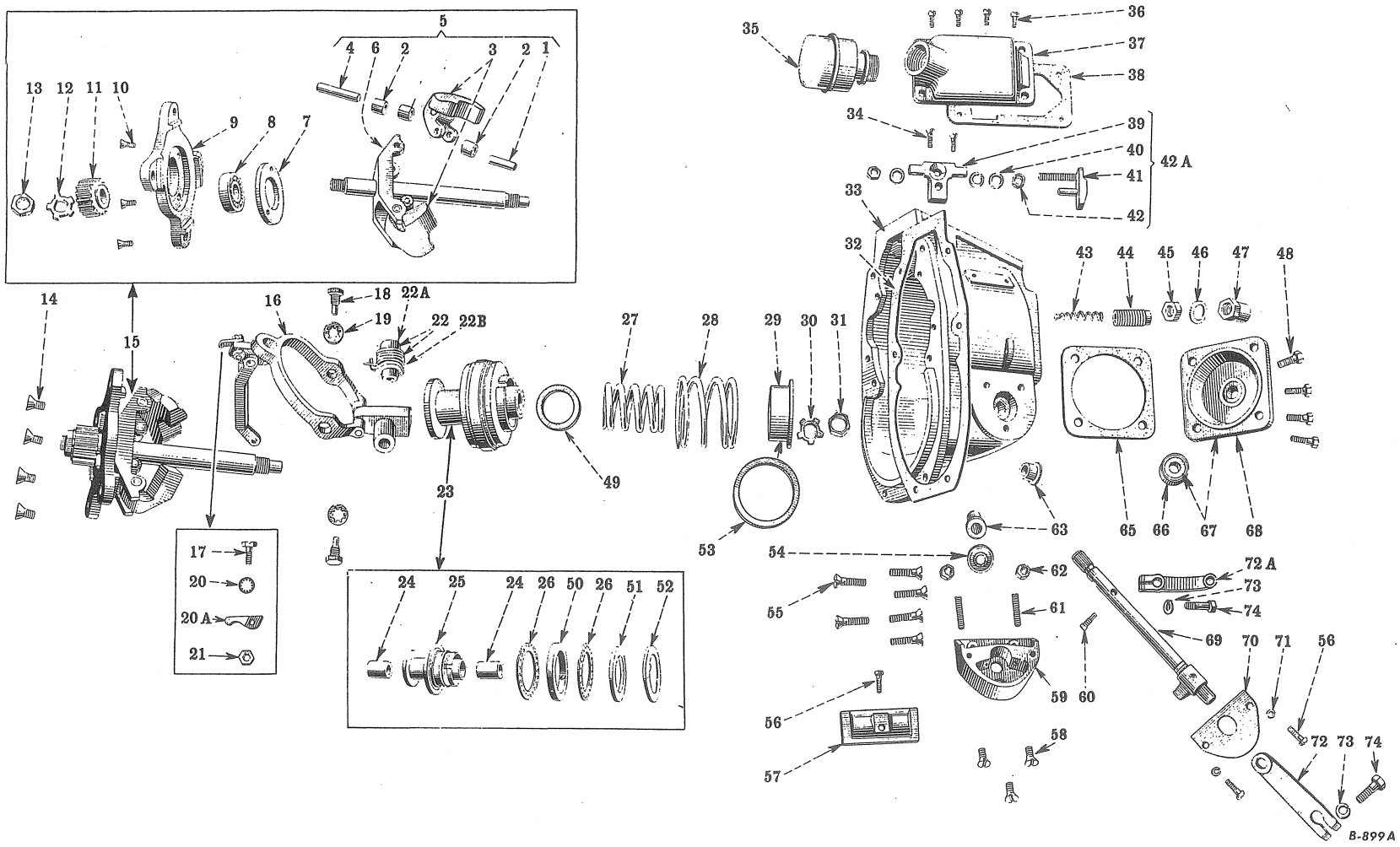

AMERICAN BOSCH FUEL INJECTION PUMP GOVERNOR —Engines TDCBM 501 to 3210

Reference numbers only are shown in illustration. Use I H C part numbers in ordering.
Unnumbered parts in the illustrations are the same as corresponding parts shown with numbers.

I H C PART NUMBER	REF. NO.	MFR'S. NUMBER	DESCRIPTION	SERIAL NUMBER	NO. REQ'D
			AMERICAN BOSCH FUEL INJECTION PUMP GOVERNOR		
54376 D			Governor, Complete GVA 225/725A 10	TDCBM 501 to 2456	1
61134 D			Governor, Complete GVA 225/725A10F	TDCBM 2457 to 3210	1
54401 D	1	PN 7921	Governor Weight Roller Pin	TDCBM 501 to 3210	2
54399 D	2	BN 791	Governor Weight Needle Bearing (Torrington B-47)	TDCBM 501 to 3210	6
54398 D	3	WT 7914	Governor Weight	TDCBM 501 to 3210	2
54398 DX	3	WT 7913A	Governor Weight with 3 Bearings, 54399 D		
			and Pin, 54401 D	TDCBM 501 to 3210	2
54405 D	4	PN 7918	Governor Weight Pin	TDCBM 501 to 3210	2
54404 D	5	WT 7915A	Governor Shaft and Spider with Weights, Complete	TDCBM 501 to 3210	1
54402 DX	6	SH 796A	Governor Shaft with Spider	TDCBM 501 to 3210	1
54406 D	7	PL 799	Bearing Plate	TDCBM 501 to 3210	1
54407 D	8	BB 791	Ball Bearing, Inner (SKF 16101)	TDCBM 501 to 3210	1
54417 D	9	BK 799	Bearing Bridge	TDCBM 501 to 3210	1
58332 D	10	SC 57-7BL	Slotted Screw, No. 8 - 32 x 7/16" N.C.		
			(Bearing Plate)	TDCBM 501 to 3210	3
54418 D	11	GE 792	Driven Gear	TDCBM 501 to 3210	1
54379 D	12	WA 796	Driven Gear Securing Nut Lockwasher	TDCBM 501 to 3210	1
54378 D	13	NT 793	Driven Gear Securing Nut	TDCBM 501 to 3210	1
58335 D	14	SC 63-8BL	Slotted Screw, 1/4 x 1/2" N.C.		
			(Bearing Bridge)	TDCBM 501 to 3210	4
54400 D	15	WT 7912A	Governor Weight and Shaft, Complete	TDCBM 501 to 3210	1
54442 D	16	LE 7933A	Fulcrum Yoke, Complete	TDCBM 501 to 3210	1
54430 D	17	SC 7931	Smoke Limit Cam Screw	TDCBM 501 to 3210	1
	21	NT 4-5	Hex. Nut, No. 10 - 32 N.F.	TDCBM 501 to 3210	1
54451 DA	18	SC 7929	Fulcrum Yoke Pivot Screw	TDCBM 501 to 3210	2
54278 D	19	WA 22-10	Fulcrum Yoke Pivot Screw Lockwasher		
			(Shakeproof No. 1118)	TDCBM 501 to 3210	2
54529 D	20	WA 21-5	Smoke Limit Cam Screw Lockwasher	TDCBM 501 to 3210	1
54528 DA	20A	CA 792/1	Smoke Limit Cam	TDCBM 501 to 3210	1
	21		Follows Reference No. 17.		
54458 D	22	PL 7917A	Operating Lever Spring Hub 54459 DX		
			with Spring, 54463 D	TDCBM 501 to	1
54459 DX	22A	PL 798A	Operating Lever Spring Hub		1
54463 D	22B	SP 7929	Operating Lever Spring		1

I H C PART NUMBER	REF. NO.	MFR'S. NUMBER	DESCRIPTION	SERIAL NUMBER	NO. REQ'D
54388 D	23	SC 794A	Sleeve, Complete	TDCBM 501 to 3210	1
54393 D	24	BB 792	Sleeve Bearing (Torrington B-1143)	TDCBM 501 to 3210	2
54389 D	25	SV 793A	Sleeve, Complete	TDCBM 501 to 3210	1
54394 D	26	BB 793	Sleeve Thrust Bearing (Bantam U-747-Q)	TDCBM 501 to 3210	2
55772 D	27	SP 7927/6	Governor Spring, Inner	TDCBM 1345 to 3210	1
54518 D	28	SP 7926/1	Governor Spring, Outer	TDCBM 1345 to 3210	1
54380 D	29	GU 798	Governor Spring Seat	TDCBM 501 to 3210	1
54379 D	30	WA 796	Securing Nut Lockwasher	TDCBM 501 to 3210	1
54378 D	31	NT 793	Spring Seat Securing Nut	TDCBM 501 to 3210	1
54433 DB	32	GA 7985	Governor End Cover Gasket	TDCBM 501 to 3210	1
54431 D	33	CV 7924A	Governor End Cover, Complete	TDCBM 501 to 3210	1
58333 D	34	SC 57-10BL	Slotted Screw, No. 8 - 32 x 5/8" N.C. (Stop Plate Bridge)	TDCBM 501 to 3210	2
60740 D	35	CV 76126A	Breather, Complete	TDCBM 2457 to 3210	1
54421 D	36	SC 7928	Inspection Cover Fastentng Screw	TDCBM 501 to 3210	4
54419 DA	37	CV 7920	Inspection Cover (Order 60741 D)	TDCBM 501 to 2456	1
60741 D	37	CV 7977	Inspection Cover (Will Work for 54419 DA)	TDCBM 2457 to 3210	1
54420 DA	38	GA 7986	Inspection Cover Gasket	TDCBM 501 to 3210	1
54428 D	39	BK 797	Stop Plate Bridge	TDCBM 501 to 3210	1
55428 DA	40	WA 1155	Stop Plate Screw Washer		3
54424 DX	41	PL 7915A	Stop Plate with Pin and Screw (5% Regulation)		1
	42	NT 8 8	Hex Jam Nut, 1/4" N.F.		2
57167 D	41	PL 7927A	Stop Plate with Pin and Screw (8-1/2% Regulation)	TDCBM 1345 to 3210	1
	42	NT 8-8	Hex Jam Nut, 1/4" N.F.		2
54427 D	42A	PL 7916A	Stop Plate Bridge, Complete (5% Regulation)		1
57169 D	42A	PL 7928A	Stop Plate Bridge, Complete (8-1/2 % Regulation)	TDCBM 1345 to 3210	1
54422 DAX	43	SP 7946A	Bumper Spring with Button	TDCBM 501 to 3210	1
54521 D	44	SC 7940	Bumper Spring Screw	TDCBM 501 to 3210	1

DIESEL ENGINE

I H C PART NUMBER	REF. NO.	MFR'S. NUMBER	DESCRIPTION	SERIAL NUMBER	NO. REQ'D
54522 D	45	NT 798	Bumper Spring Locknut	TDCBM 501 to 3210	1
54524 D	46	GA 7965	Bumper Spring Cap Gasket	TDCBM 501 to 3210	1
54523 D	47	CP 793	Bumper Spring Cap	TDCBM 501 to 3210	1
54477 D	48	SC 7927	End Cap Securing Screw	TDCBM 501 to 3210	4
54383 D	49	SR 795	Inner Spring Spacer	TDCBM 501 to 3210	2
54395 D	50	RG 792	Sleeve Sliding Ring	TDCBM 501 to 3210	1
54396 D	51	NT 794	Sleeve Nut	TDCBM 501 to 3210	1
54397 D	52	WA 797	Sleeve Washer	TDCBM 501 to 3210	1
54382 D	53	SR 796	Outer Spring Spacer, .020"	TDCBM 501 to 3210	X
54434 D	54	PK 795	Operating Lever Shaft Oil Seal		1
55350 D	55	SC 1108	Governor End Cover Screw	TDCBM 501 to 3210	6
54470 D	56	SC 7934	Stop Flange Cover Screw	TDCBM 501 to 3210	3
	71	WA 6-4	Lockwasher, No. 8 (Light)		2
54469 D	57	CV 7922	Stop Plange Cover	TSCBM 501 to 3210	1
58334 D	58	SC 61-8BL	Flat Head Screw, No. 12-24 x 1/2" N.C. (Stop Flange)	TDCBM 501 to 3210	3
54472 D	59	FL 798	Stop Flange	TDCBM 501 to 3210	1
54462 D	60	SC 7930	Operating Lever Spring Hub Set Screw	TDCBM 501 to 3210	1
54473 D	61	SC 7938	Stop Adjustment Screw	TDCBM 501 to 3210	2
54474 D	62	NT 796	Stop Adjustment Screw Locknut	TDCBM 501 to 3210	2
54435 D	63	BG 793	Operating Lever Shaft Bushing		2
54441 D	64	PG 797	Closing Plug		1
54478 DB	65	GA 7987	End Cap Gasket	TDCBM 501 to 3210	1
54476 DA	66	BB 799	End Cap Ball Bearing (N.D. 7038)	TDCBM 501 to 3210	1
54475 DAX	67	CP 791A	End Cap with Bearing, 54476 DA	TDCBM 501 to 3210	1
54475 DA	68	CP 792	End Cap	TDCBM 501 to 3210	1
54454 DX	69	SH 7910A	Operating Lever Shaft with Stop and Rivet	TDCBM 501 to 3210	1
54471 D	70	CV 7921	Cover Plate, for Stop Flange	TDCBM 500 to 3210	1
	71		Follows Reference No. 56		
54457 DAX	72	LE 7935A	Operating Lever with Screw, 55360 D and 1/4" Lockwasher	TDCBM 501 to 3210	1
55360 D	74	SC 1109	Operating Lever Screw	TDCBM 501 to 3210	1
	73	WA-5-8	Lockwasher, 1/4"		1
40329 DA		SC 150-2CA	Name Plate Drive Rivet		2
54440 D		NP 7631	Name Plate	TDCBM 501 to 3210	1
60745 D			Governor Drain Tee	TDCBM 2457 to 3210	1

Always give PUMP SERIAL NUMBERS when ordering Parts. X - As Required.

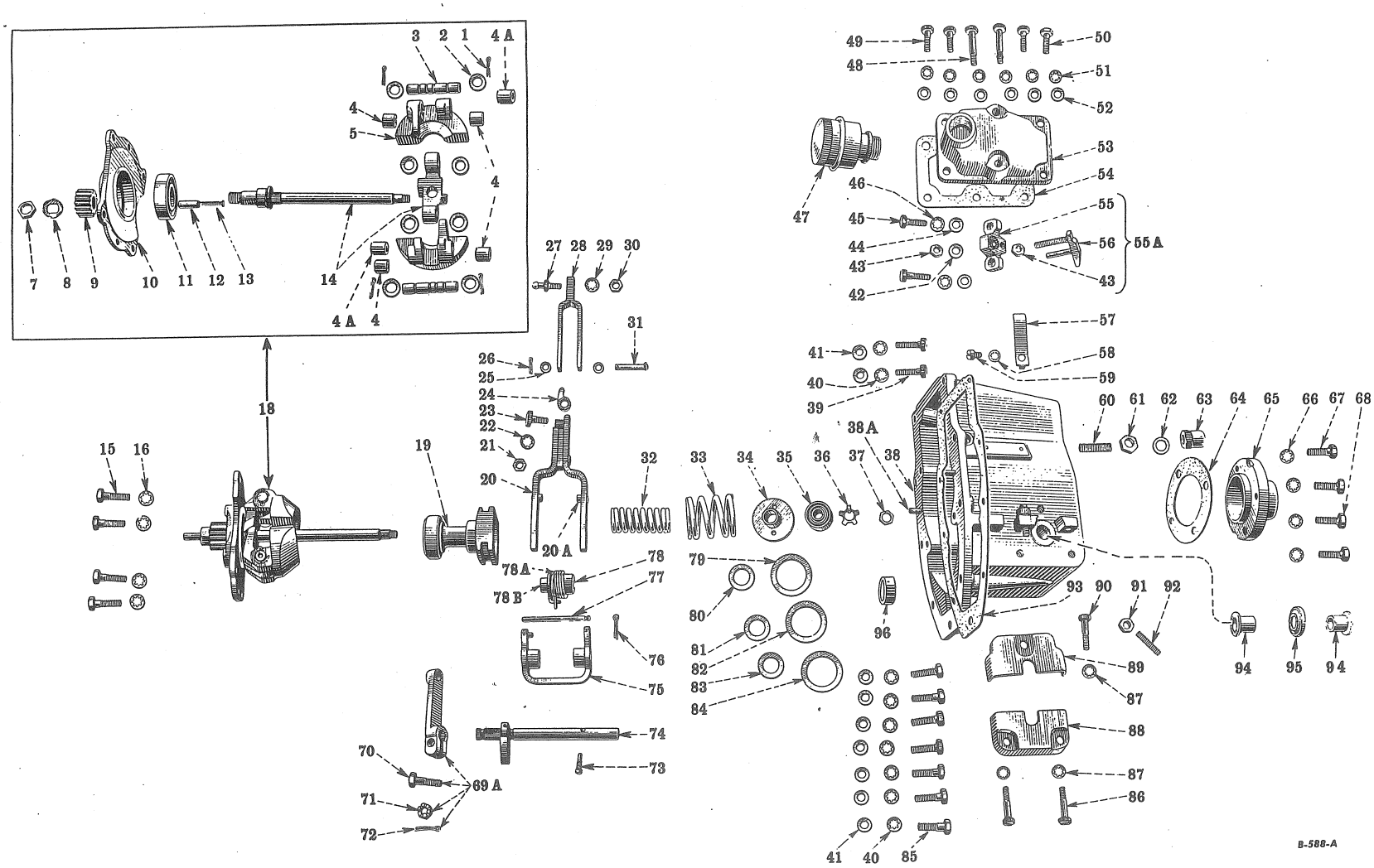

AMERICAN BOSCH FUEL INJECTION PUMP GOVERNOR —Engines TDCBM 3211 up

Reference numbers only are shown in illustration. Use I H C part numbers in ordering.
Unnumbered parts in the illustrations are the same as corresponding parts shown with numbers.

AMERICAN BOSCH FUEL INJECTION PUMP GOVERNOR

H C PART NUMBER	REF. NO.	MFR'S. NUMBER	DESCRIPTION	SERIAL NUMBER	NO. REQ'D
62190 D			Governor, Complete, GVA 225/700PK 202	TDCBM 3211 Up	1
62220 D	2	WA 1134	Governor Weight Washer-Bushing Side		
			(5% Regulation)	TDCBM 3211 Up	4
62220 D	2	WA 1134	Governor Weight Washer (11% Regulation)	TDCBM 3211 Up	8
64189 D	2	WA 1109	Governor Weight Washer Needle Bearing Side		
			(5% Regulation)	TDCBM 3211 Up	4
62219 D	3	PN 7950	Governor Weight Pin (11% Regulation)	TDCBM 3211 Up	2
	1	PN2-20CA	Cotter Pin, 1/16 x 5/8" (Camium Plated)		4
64190 D	3	PN 7940	Governor Weight Pin (5% Regulation)	TDCBM 3211 Up	2
62218 D	4	BG 7918	Governor Weight Bushing (11% Regulation)	TDCBM 3211 Up	4
62218 D	4	BG 7918	Governor Weight Bushing (5% Regulation)	TDCBM 3211 Up	2
64191 D	4A	BN 793	Governor Weight Needle Bearing (5% Regulation)		
			(Torrington B-59-X)	TDCBM 3211 Up	2
62217 DX	5	WT 7926A	Governor Weight with 2 Bushings 62218 D		
			(11 % Regulation)	TDCBM 3211 Up	2
64192 D	5	WT 7927A	Governor Weight with Bushing, 62218 D and Bearing, 64191 D		
			(5% Regulation)	TDCBM 3211 Up	2
62224 D	7	NT 7923	Governor Driven Gear Nut	TDCBM 3211 Up	1
62223 D	8	WA 7919	Governor Driven Gear Lockwasher	TDCBM 3211 Up	1
62222 D	9	GE 7920	Governor Driven Gear	TDCBM 3211 Up	1
62225 DX	10	PL 7940	Bearing Support Plate with Cage	TDCBM 3211 Up	1
62221 D	11	BB 7911	Governor Weight Shaft Bearing (Drive End)		
			(N.D. 3203 B)	TDCBM 3211 Up	1
62227 D	12	PC 799	Governor Shaft Plunger Oiler	TDCBM 3211 Up	1
62228 D	13	SP 7954	Governor Shaft Plunger Oiler Spring	TDCBM 3211 Up	1
62214 D	14	SH 7928A	Governor Weight Shaft and Spider	TDCBM 3211 Up	1
62205 D	15	SC 1110-1	Bearing Support Plate Bolt	TDCBM 3211 Up	4
52745 V	16	WA 22-8CA	Bearing Support Plate Bolt Lockwasher		
			(Shakeproof No. 1214)(Same as 40753 D)	TDCBM 3211 Up	4
62213 D	18	SH 7924A	Governor Weight and Shaft, Complete		1
			(11% Regulating)	TDCBM 3211 Up	
64193 D	18	SH 7933A	Governor Weight and Shaft, Complete		
			(5% Regulation)	TDCBM 3211 Up	1
62229 DX	19	SV 7910A	Sleeve with Bushing and Thrust Bearing	TDCBM 3211 Up	1
62237 DX	20		Fulcrum Lever with 2 Pins, 62242 D)	TDCBM 3211 Up	1
		R1-6-22	Rivet, 3/16 x 11/16" Flat Head		1
62242 D	20A	PN 7931	Fulcrum Lever Pivot Pin	TDCBM 3211 Up	2
	21	NT8-8CA	Hex. Jam Nut, 1/4" N.F. (Cadmium Plated)		1
52745 V	22	WA 22-8CA	Smoke Limit Cam Screw Lockwasher		
			(Shakeproof No. 1214)(Same As 40753 D)	TDCBM 3211 Up	1
62271 D	23	SC 1136	Smoke Limit Cam Screw (Fulcrum Lever)	TDCBM 3211 Up	1
62270 D	24	CA 793	Smoke Limit Cam	TDCBM 3211 Up	1
62249 D	25	WA 1156	Control Rod Link Pin Washer	TDCBM 3211 Up	2
	26		Follows - Reference Number 31		
62247 D	27	PN 7935	Control Rod Linkage Pin	TDCBM 3211 up	1
	30	NT 4-8CA	Hex. Nut, 1/4" N.F. (Cadmium Plated)		1
62246 DX	28	LK 796	Control Rod Link	TDCBM 3211 Up	1
52745 V	29	WA 22-8CA	Control Rod Linkage Pin Lockwasher		
			(Shakeproof No. 1214)(Same As 40753 D)	TDCBM 3211 Up	1
	30		Follows - Reference Number 27		

DIESEL ENGINE

I H C PART NUMBER	REF. NO.	MFR'S. NUMBER	DESCRIPTION	SERIAL NUMBER	NO. REQ'D
62248 D	31	PN 7946	Control Rod Link Pin	TDCBM 3211 Up	1
	26	PN 2-14CA	Cotter Pin, 1/16 x 7/16" (Cadmium Plated)		2
62648 D	32	SP 7950/2	Governor Spring, Inner	TDCBM 3211 Up	1
62645 D	33	SP 7951/1	Governor Spring, Outer	TDCBM 3211 Up	1
62628 D	34	GU 7912	Spring Seat	TDCBM 3211 Up	1
62625 D	35	BB 7912	Governor Weight Shaft Bearing (Spring End)		
			(N.D. 87008)	TDCBM 3211 Up	1
62626 D	36	WA 1182	Governor Weight Shaft Bearing Lockwasher	TDCBM 3211 Up	1
62627 D	37	NT 1070	Governor Weight Shaft Bearing Nut	TDCBM 3211 Up	1
62200 D	38	CV 7961A	Governor End Cover, Complete		
			(67796 D Will Work)	TDCBM 3211 Up	1
	92	SC 350-16CA	Set Screw, 1/4 x 1" N.F. Headless (Oval Point)		
			(Cadmium Plated)		2
	91	NT 6-8CA	Hex. Nut, 1/4" N.F. (Cadmium Plated)		2
67796 D	38	CV 79108A	Governor End Cover, Complete		
			(62200 D Will Work)	TDCBM 3211 Up	1
62207 D	38A	PN 751	Governor End Cover Dowel Pin	TDCBM 3211 Up	2
62204 D	39	SC 1110	Governor End Cover Bolt (Drilled)	TDCBM 3211 Up	2
52745 V	40	WA 22-8CA	Governor End Cover Bolt Lockwasher		
			(Shakeproof No. 1214)(Same As 40753 D)	TDCBM 3211 Up	9
62206 D	41	WA 1143	Governor End Cover Bolt Washer	TDCBM 3211 Up	9
55428 DA	42	WA 1155	Stop Plate Screw Washer		3
	43		Follows Reference No. 56		
62206 D	44	WA 1143	Stop Plate Bridge Bolt Washer	TDCBM 3211 Up	2
62205 D	45	SC 1110-1	Stop Plate Bridge Bolt	TDCBM 3211 Up	2
52745 V	46	WA 22-8CA	Stop Plate Bridge Bolt Lockwasher		
			(Shakeproof No. 1214)(Same As 40753 D)	TDCBM 3211 Up	2
60740 D	47	CV 76126A	Breather, Complete		1
62275 D	48	SC 1139	Governor Inspection Cover Bolt, Center	TDCBM 3211 Up	2
62276 D	49	SC 1140-1	Governor Inspection Cover Bolt (Drilled)	TDCBM 3211 Up	2
62633 D	50	SC 1140	Governor Inspection Cover Bolt, Short	TDCBM 3211 Up	2
52745 V	51	WA 22-8CA	Governor Inspection Cover Bolt Lockwasher		
			(Shakeproof No. 1214)(Same As 40753 D)	TDCBM 3211 Up	6
62206 D	52	WA 1143	Governor Inspection Cover Bolt Washer	TDCBM 3211 Up	6
62272 DX	53	CV 7982A	Governor Inspection Cover with Baffle		1
			(68626 DX Will Work)	TDCBM 3211 Up	1
68626 DX	53	CV 79821A	Governor Inspection Cover with Baffle		
			(62272 DX Will Work)	TDCBM 3211 Up	1
62274 D	54	GA 7979	Governor End Cover Gasket	TDCBM 3211 Up	1
62267 D	55	BK 7917	Stop Plate Bridge (68625 D Will Work)	TDCBM 3211 Up	1
62267 DX	55A	PL 7943A	Stop Plate Bridge, Complete	TDCBM 3211 Up	1
68625 D	55	BK 7917-1	Stop Plate Bridge (62267 D Will Work)	TDCBM 3211 Up	1
62268 DX	56	PL 7942A	Stop Plate with Pin and Screw		
			(End Cover Housing)	TDCBM 3211 Up	1
	43	NT 8-8CA	Hex. Jam Nut, 1/4" N.F. (Cadmium Plated)		2
62208	57	SP 7953	Bumper Spring	TDCBM 3211 Up	1
67980 H	58	WA 22-6CA	Bumper Spring Lockwasher (Shakeproof No. 1212)	TDCBM 3211 Up	1
	59		Screw, No. 12 - 24 x 5/16" Fillister Head		
			(Cadmium Plated)		1
62209 D	60	SC 1134	Bumper Spring Adjusting Screw	TDCBM 3211 Up	1
	61	NT6-10CA	Hex. Nut, 5/16" N.F. (Cadmium Plated)		1
62211 D	62	GA 7980	Bumper Spring Cap Gasket	TDCBM 3211 Up	1
62210 D	63	NT 7917	Bumper Spring Cap	TDCBM 3211 Up	1
62235 D	64	GA 7982	Spring Retainer End Cap Gasket	TDCBM 3211 Up	1
62233 D	65	CP 7910	Spring Retainer End Cap	TDCBM 3211 Up	1

DIESEL ENGINE

H C PART NUMBER	REF. NO.	MFR'S. NUMBER	DESCRIPTION	SERIAL NUMBER	NO. REQ'D
52745 V	66	WA 22-8CA	Spring Retainer End Cap Bolt Lockwasher		
			(Shakeproof No. 1214)(Same As 40753 D)	TDCBM 3211 Up	1
62204 D	67	SC 1110	Spring Retainer End Cap Bolt, Upper	TDCBM 3211 Up	2
62205 D	68	SC 1110-1	Spring Retainer End Cap Bolt, Lower	TDCBM 3211 Up	2
62263 DX	69A	LE 7957A	Operating Lever with Bolt, 62264 D and Nut,		
			62265 D	TDCBM 3211 Up	1
62264 D	70	SC 7961	Operating Lever Bolt	TDCBM 3211 Up	1
62265 D	71	NT 7919	Operating Lever Bolt Nut	TDCBM 3211 Up	1
	72	PN 2-20CA	Cotter Pin, 1/16 x 5/8"		1
54462 D	73	SC 7930	Spring Plate Set Screw	TDCBM 3211 Up	1
62255 DX	74	SH 7921A	Operating Lever Shaft with Stop and Pin	TDCBM 3211 Up	1
62243 DA	75	BK 7913 C	Fulcrum Lever Bracket	TDCBM 3211 Up	1
	76	PN 2-20CA	Cotter Pin, 1/16 x 5/8" (1 Used for 64161)		2
62245 D	77	PN 7928	Fulcrum Lever Bracket Pin (Order 64161 D)	TDCBM 3211 Up	2
64161 D	77	PN 7951	Fulcrum Lever Bracket Pin (Will Work for 62245 D)	TDCBM 3211 Up	1
62259 D	78	PL 7925A	Operating Shaft Spring Plate 62250 DX with Spring,		
			62253 D	TDCBM 3211 Up	1
62253 D	78A	SP 7949	Operating Shaft Spring	TDCBM 3211 Up	1
62250 DX	78B	PL 7923A	Operating Shaft Spring Plate and Hub	TDCBM 3211 Up	1
62641 D	79	SR 7914/1	Outer Spring Spacer, .020"	TDCBM 3211 Up	X
62637 D	80	SR 799/1	Inner Spring Spacer, .020"	TDCBM 3211 Up	X
62638 D	81	SR 799/2	Inner Spring Spacer, .042"	TDCBM 3211 Up	X
62642 D	82	SR 7914/2	Outer Spring Spacer, .042"	TDCBM 3211 Up	X
62639 D	83	SR 799/3	Inner Spring, .058"	TDCBM 3211 Up	X
62640 D	83	SR 799/4	Inner Spring Spacer, .083"	TDCBM 3211 Up	X
62643 D	84	SR 7914/3	Outer Spring Spacer, .058"	TDCBM 3211 Up	X
62644 D	84	SR 7914/4	Outer Spring Spacer, .083"	TDCBM 3211 Up	X
62205 D	85	SC 1110-1	Governor End Cover Bolt, Long (Plain)	TDCBM 3211 Up	7
62262 D	86	SC 7950-1	Operating Lever Stop Cover Lower Bolt	TDCBM 3211 Up	2
67980 H	87	WA 22-6CA	Operating Lever Stop Cover Lockwasher		
			(Shakeproof No. 1212)	TDCBM 3211 Up	3
62261 D	88	CV 7946	Operating Lever Stop Cover, Lower	TDCBM 3211 Up	1
62254 D	89	CV 7945	Operating Lever Stop Cover, Upper	TDCBM 3211 Up	1
62260 D	90	SC 7950	Operating Lever Stop Cover Upper Bolt	TDCBM 3211 Up	1
	91		Follows Reference No. 38		
	92		Follows Reference No. 38		
62203 D	93	GA 7978	Governor End Cover Gasket	TDCBM 3211 Up	1
54435 D	94	BG 793	Operating Lever Shaft Bushing		2
54434 D	95	PL 795	Operating Lever Shaft Oil Seal		1
54441 D	96	PG 797	Closing Plug (For Operating Shaft		
			Hole in End Cover)	TDCBM 3211 Up	1
40329 DA		SC 150-2CA	Name Plate Drive Rivet		2
62215 D		SH 7932	Governor Weight Shaft (Order 62214 D REF 14)	TDCBM 3211 Up	1
62216 DX		HP 7910A	Governor Spider with Pins (Order 62214 D Ref. 14)	TDCBM 3211 Up	1
62236 D		LE 7946A	Fulcrum Lever with Bracket, Complete (11% Regulation)		
			(Order 69238 D)		1
64194 D		LE 7970A	Fulcrum Lever with Bracket, Complete		
			(5% Regulation) (Order 69238 D)		1
69238 D		LE 7987A	Fulcrum Lever with Bracket, Complete		
			(Will Work for 62236 D or 64194 D)		1

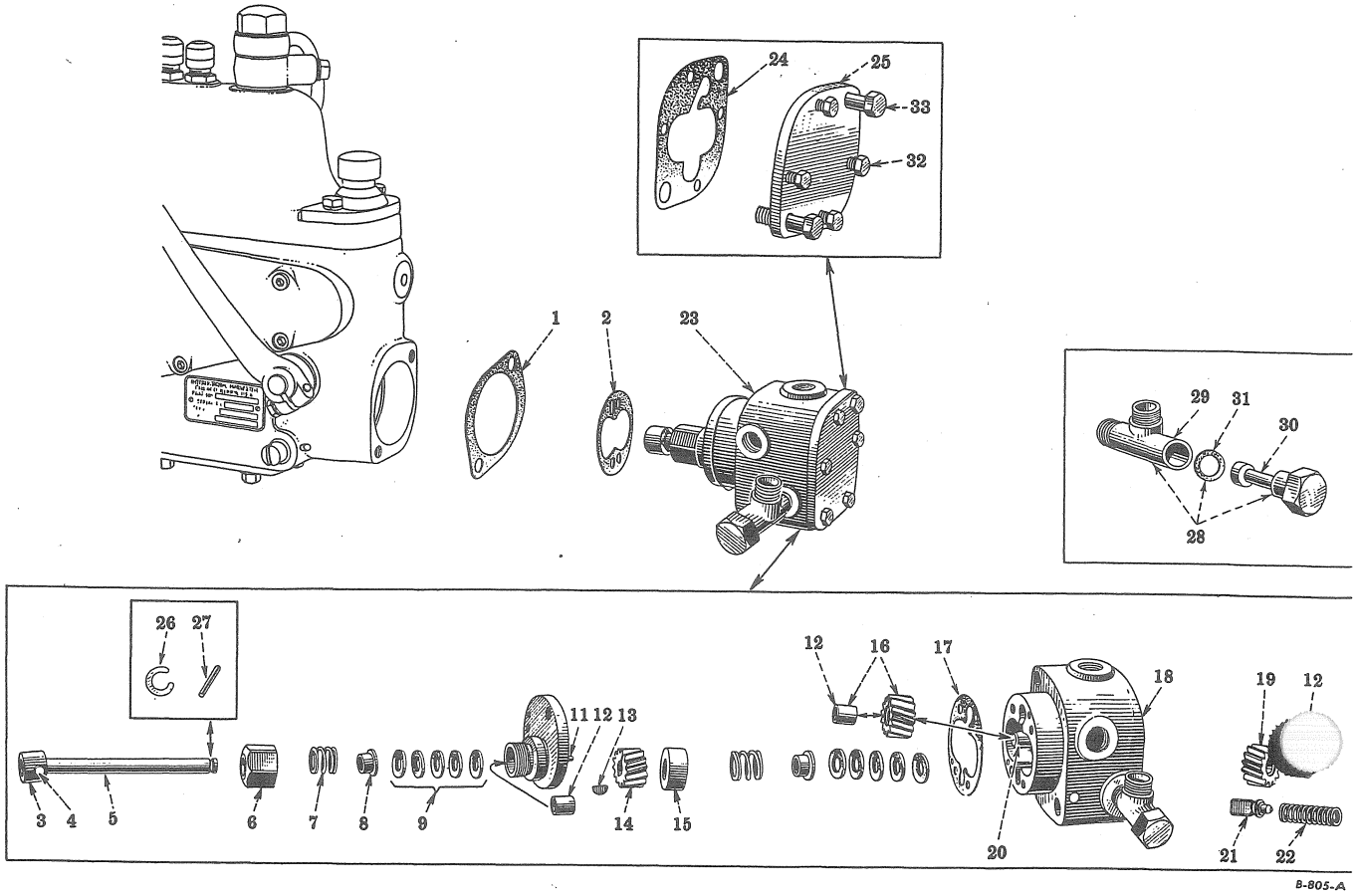

Reference numbers only are shown in illustration. Use I H C part numbers in ordering.
Unnumbered parts in the illustrations are the same as corresponding parts shown with numbers.

PRIMARY PUMP

65309 D-1	1	Fuel Injection Pump, Complete	1	
		Cap Screw, 3/8 x 1-1/2" N.C. Hex Head	1	
		Cap Screw, 3/8 x 2-1/2" N.C. Hex Head	1	
		Lockwasher, 3/8"	2	
59729 D	1	Primary Pump Housing Gasket	1	
59746 DB	2	Primary Pump Bearing Cage Gasket	1	
59736 D	3	Primary Pump Shaft Coupling	1	

Always give PUMP NUMBER and SERIAL NUMBERS when ordering Parts.

DIESEL ENGINE

PART NUMBER	REF. NO.	DESCRIPTION	SERIAL NUMBER	NO. REQ'D
61927 D	4	Primary Pump Shaft Coupling Rivet		1
59733 DAYA	5	Primary Pump Shaft, Complete		
		(Will Work for 59733 DX and 59741 D)	Pumps 501 to 574	1
59733 DX	5	Primary Pump Shaft with Coupling 59736 D and Rivet 61927 D		
		(Order 59733 DAYA)	Pumps 501 to 574	1
59733 DAX	5	Primary Pump Shaft with Coupling, 59736 D and Rivet 61927 D	Pumps 575 Up	1
59740 D	6	Primary Pump Packing Spring Nut		1
59739 D	7	Primary Pump Packing Spring		2
59738 D	8	Primary Pump Packing Gland		2
59737 D	9	Primary Pump Packing		2
59609 D	11	Primary Pump Bearing Cage Dowel		2
59730 D	12	Primary Pump Bushing		4
64060 D	13	Primary Pump Shaft Key		2
59743 D	14	Scavenging Pump Drive Gear		1
59750 D	15	Primary Pump Packing Retainer		1
59742 DX	16	Primary Pump Idler Gear with Bushing, 59730 D		2
59744 D	17	Primary Pump Scavenging Gear Gasket (.006")		x
64871 D	17	Primary Pump Scavenging Gear Gasket (.004")		x
8974 DXA	18	Primary Pump Housing, Complete		1
		Machine Screw, No. 8 - 32 x 3/8" Fillister Head (Granodize)		3
59741 D	19	Primary Pump Pressure Gear (Order 59733 DAYA - Ref. No. 5)	Pumps 501 to 574	1
59741 DA	19	Primary Pump Pressure Gear	Pumps 575 Up	1
59751 D	20	Primary Pump Idler Gear Shaft		1
59661 DX	21	Primary Pump By-pass Valve		
		(Not Serviced Separately - Order 8974 DXA, Ref. No. 18)		1
59749 D	22	Primary Pump By-pass Valve Spring	Pumps 501 to 2002	1
67918 D	22	Primary Pump By-pass Valve Spring	Pumps 2003 Up	1
66108 DB	23	Primary Pump Unit, Complete		1
59732 D	24	Primary Pump Housing Cover Gasket (.006")		x
64870 D	24	Primary Pump Housing Cover Gasket (.004")		x
59731 D	25	Primary Pump Housing Cover (Order 68389 D)	Pumps 501 to 3456	1
68389 D	25	Primary Pump Housing Cover, Complete (Will Work for 59731 D)	Pumps 501 to 3456	1
9708 D	25	Primary Pump Housing Cover	Pumps 3457 Up	1
65210 D	26	Primary Pump Shaft Snap Ring	Pumps 575 Up	1
59735 D	27	Primary Pump Shaft Pin	Pumps 501 to 574	1
67922 D	28	Primary Pump Filter, Complete		1
67923 D	29	Primary Pump Filter Body		1
67924 D	30	Primary Pump Filter Screen		1
67919 D	31	Primary Pump Filter Gasket		1
68388 D	32	Primary Pump Housing Cover Screw	Pumps 3457 Up	4
66002 D	33	Primary Pump Screw	Pumps 3457 Up	2

X As Required

Always give PUMP NUMBER and SERIAL NUMBERS when ordering Parts.

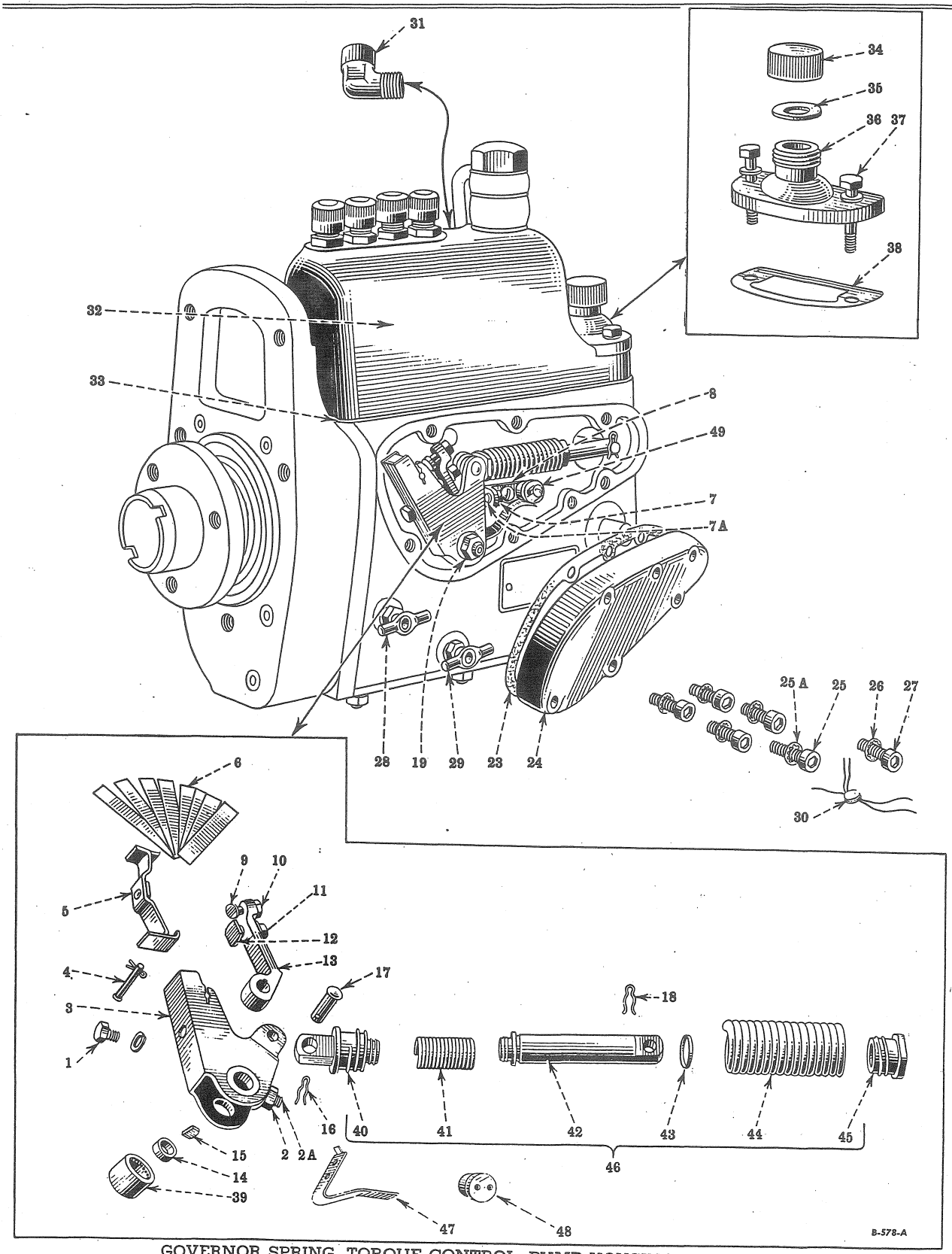

GOVERNOR SPRING, TORQUE CONTROL, PUMP HOUSING COVER AND OIL FILTER

Reference numbers only are shown in illustration. Use I H C part numbers in ordering.

Unnumbered parts in the illustrations are the same as corresponding parts shown with numbers.

PART UMBER	REF. NO.	DESCRIPTION	SERIAL NUMBER	NO. REQ'D
		GOVERNOR SPRING, TORQUE CONTROL, PUMP HOUSING COVER AND OIL FILLER		
61951 D	1	Torque Spring Seat Screw		1
		Lockwasher, .190 x 1/16 x 3/64"		1
61939 D	2	Torque Control Lever Pickup Nut		1
61943 D	2A	Torque Control Limiting Screw		1
65400 D	3	Torque Spring Arm, 59784 DA and Seat, 61947 DXA		
		(Will Work for 59784 D)	Pumps 501 to 712	1
59784 D	3	Torque Spring Arm, Complete (Order 65400 D)	Pumps 501 to 712	1
59784 DA	3	Torque Spring Arm	Pumps 713 Up	1
65066 D	4	Torque Spring Pin		1
		Cotter Pin, 1/16 x 3/8"		1
61947 DXA	5	Torque Spring Seat		1
59781 D	6	Torque Spring (.010" Thick)		3
65870 D	6	Torque Spring (.020" Thick)		2
61939 D	7	Torque Spring Arm Stop Nut		1
61943 D	7A	Torque Spring Arm Stop		1
61946 D	8	Torque Spring Arm Stop Holder		1
		Machine Screw, No. 10 - 32 x 1/2" Round Head		
		(2 used 501 to 1471)	Pumps 1472 Up	1
		Slotted Screw, No. 10 - 32 x 7/8" Round Head	Pumps 1472 Up	1
	49	Lockwasher, 3/16"		2
59772 D	9	Torque Control Lever Stop		1
61939 D	10	Torque Control Lever Stop Nut		1
61939 D	11	Torque Spring Shoe Screw Nut		1
59782 DX	12	Torque Spring Shoe and Screw		1
59767 D	13	Torque Control Lever		1
59793 D	14	Torque Control Lever Spacer		2
64060 D	15	Torque Control Lever Key		1
59727 D	16	Governor Arm Pin Snap Ring		1

PART NUMBER	REF. NO.	DESCRIPTION	SERIAL NUMBER	NO. REQ'D
61941 D	17	Governor Spring Pin		1
59727 D	18	Governor Spring Lever Arm Snap Ring		1
59763 D	19	Governor Fork Shaft Nut		1
59701 D	23	Pump Housing Side Cover Gasket		1
8972 D	24	Pump Housing Side Cover		1
59702 D	25	Pump Housing Side Cover Screw		5
61925 D	25A	Pump Housing Side Cover Screw Lockwasher		5
61925 D	26	Pump Housing Side Seal Screw Lockwasher		1
59703 D	27	Pump Housing Side Seal Screw		1
59708 D	28	Pump Housing Oil Level Cock (Weatherhead Company No. 135)		1
59708 D	29	Pump Housing Oil Drain Cock (Weatherhead Company No. 135)		1
61921 D	30	Pump Housing Cover Seal		1
37323 D	31	Breather Tube Elbow		1
37323 DX	31	Breather Tube Elbow with Connector Nut, 37165 D		1
8971 DA	32	Pump Housing Cover		1
		Cap Screw, 1/4 x 1-3/8" N.C.		1
		Lockwasher, 1/4"		1
59694 D	33	Pump Housing Cover Gasket		1
61923 DX	34	Pump Housing Oil Filler Cap with Gasket, 61924 D		1
61924 D	35	Pump Housing Oil Filler Cap Gasket		1
9412 D	36	Pump Housing Oil Filler Neck		1
59707 D	37	Pump Housing Cover Screw		1
		Lockwasher, 1/4"		1
64044 D	38	Pump Housing Oil Filler Neck Gasket		1
45775 D	39	Governor Fork Shaft Needle Bearing (Torrington B-88)		1

DIESEL ENGINE

PART NUMBER	REF. NO.	DESCRIPTION	SERIAL NUMBER	NO. REQ'D
59754 D	40	Governor Spring Eye		1
67208 D	41	Governor Spring, Inner		1
59755 D	42	Governor Spring Adapter		1
59757 D	43	Governor Spring Spacer, 1/8"		x
59758 D	43	Governor Spring Spacer 1/16"		x
67233 D	43	Governor Spring Spacer, 3/32"		x
67234 D	43	Governor Spring Spacer, 1/4"		x
67235 D	43	Governor Spring Spacer, 3/8"		x
59752 DA	44	Governor Spring, Outer		1
59756 D	45	Governor Spring Adapter Sleeve		1
67389 D	46	Governor Spring, Complete		1
67393 D	47	Bumper Spring, Light (.023" Thick)	Pumps 1472 Up	x
68380 D	47	Bumper Spring, Heavy (.036" Thick)	Pumps 1472 Up	x
67394 DA	48	Bumper Spring Stop	Pumps 1472 Up	1
	49	Lockwasher Follows Ref. No. 8		
24790 D	49	Torque Spring Arm Stop Holder Screw Washer (Shakeproof No. 1210) (Order 3/16" Standard Lockwasher)		2
37165 D		Connector Nut		1

Always give PUMP NUMBER and SERIAL NUMBERS when ordering Parts. X As Required

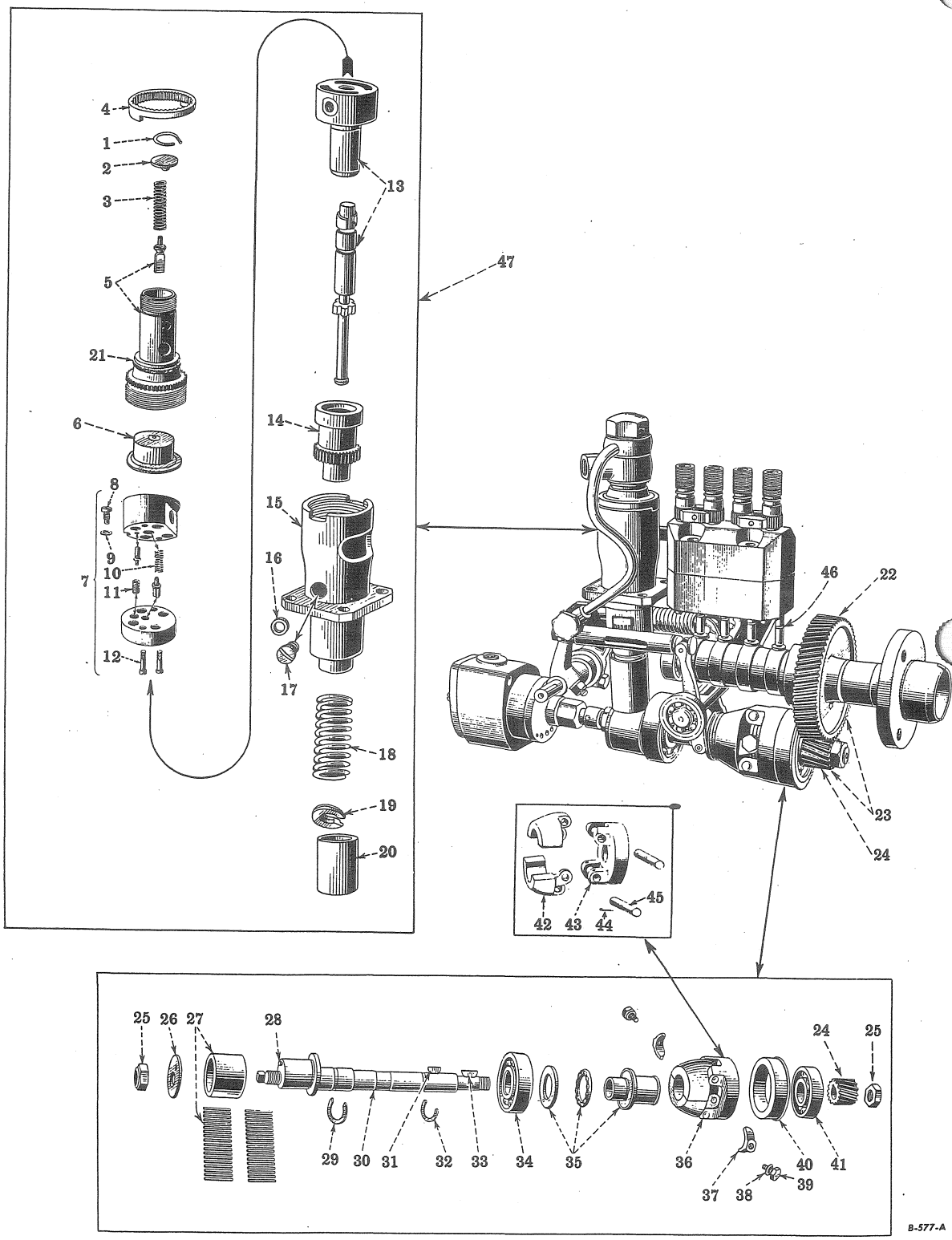

PLUNGER AND GOVERNOR

Reference numbers only are shown in illustration. Use I H C part numbers in ordering.
Unnumbered parts in the illustrations are the same as corresponding parts shown with numbers.

PART NUMBER	REF. NO.	DESCRIPTION	SERIAL NUMBER	NO. REQ'D	

DISTRIBUTOR VALVE BLOCK, FUEL RETURN PIPE AND HIGH PRESSURE PIPE
(Plunger to Distributor)

59665 D	1	Fuel Return Check Spring Lock		1	
59664 D	2	Fuel Return Check Spring Seat		1	
59663 D	3	Fuel Return Check Spring		1	
59626 D	4	Plunger Bushing Retainer Lock (Order 61926 DAY)	Pumps 501 to 1119	1	
64679 D	4	Plunger Bushing Clamp Lock	Pumps 1120 Up	1	
61926 DX	5	Plunger Bushing Clamp, Complete (Order 61926 DAY)	Pumps 501 to 1119	1	
61926 DAY	5	Plunger Bushing Clamp 61926 DAX and Lock, 64679 D			
		(Will Work for 59626 D and 61926 DX)	Pumps 501 to 1119	1	
61926 DAX	5	Plunger Bushing Clamp with Fuel Return Check and Seat	Pumps 1120 Up	1	
59650 DA	6	Fuel Filter Element		1	
66392 D	7	Check and Reverse Check Valve Block		1	
59645 D	8	Reverse Check Valve Screw		1	
59646 D	9	Reverse Check Valve Screw Washer		1	
59638 D	10	Check Valve Spring		1	
59642 D	11	Reverse Check Valve Spring		1	
59640 D	12	Check Valve Block Clamp Screw		2	
59620 DX	13	Plunger with Bushing and Bushing Dam		1	
59631 D	14	Plunger Control Gear		1	
59625 D	15	Plunger Bushing Retainer		1	
59624 D	16	Plunger Bushing Screw Gasket		2	
59623 D	17	Plunger Bushing Screw		2	
59633 D	18	Plunger Spring		1	
59634 D	19	Plunger Spring Seat		1	
59635 D	20	Plunger Tappet		1	
59652 D	21	Plunger Bushing Clamp Seal		1	
59674 D	22	Camshaft Gear (Order 67917 D)		1	
67917 D	23	Camshaft Gear and Governor Shaft Pinion (Matched in Pairs)			
		(Will Work for 59674 D and 59681 D)		1	
59681 D	24	Governor Shaft Pinion (Order 67917 D)		1	
59682 D	25	Governor Shaft Nut		2	
59684 D	26	Governor Shaft Eccentric Washer		1	
59683 D	27	Governor Shaft Eccentric Bearing		1	
59685 D	28	Governor Shaft Eccentric Washer Pin		1	
59679 D	29	Governor Shaft Snap Ring, Large		1	
59677 DX	30	Governor Shaft, Complete		1	
4167 T	31	Governor Shaft Key (Woodruff No. 3 - 1/8 x 1/2")		1	
59678 D	32	Governor Shaft Snap Ring, Small		1	
7699 TM	33	Governor Shaft Key (Woodruff No. 5 - 1/8 x 5/8")		1	
17063 D	34	Governor Shaft Large Bearing (ND 1304)		1	
59693 DX	35	Governor Sleeve with Thrust Bearing		1	
59686 DX	36	Governor Weight, Complete		1	
59690 DAX	37	Governor Weight Thrust Shoe (Set of Two)		1	
52745 D	38	Governor Weight Thrust Shoe Pin Lockwasher (Shakeproof No. 1214)		2	
59691 DX	39	Governor Weight Thrust Shoe Pin with Lockwasher, 52745 V		2	
59680 D	40	Governor Shaft Bearing Cage		1	
50941 V	41	Governor Shaft Small Bearing (ND 3303)		1	
59686 D	42	Governor Weight (Order 59686 DX, Ref. No. 36)		2	
59689 D	43	Governor Weight Carrier		1	
59688 D	44	Governor Weight Rivet		2	
59687 D	45	Governor Weight Pin		2	
59604 D	46	Distributor Valve Tappet		4	
66110 D	47	Plunger Unit, Complete (Includes all Plunger Parts Except Ref. No. 20)		1	

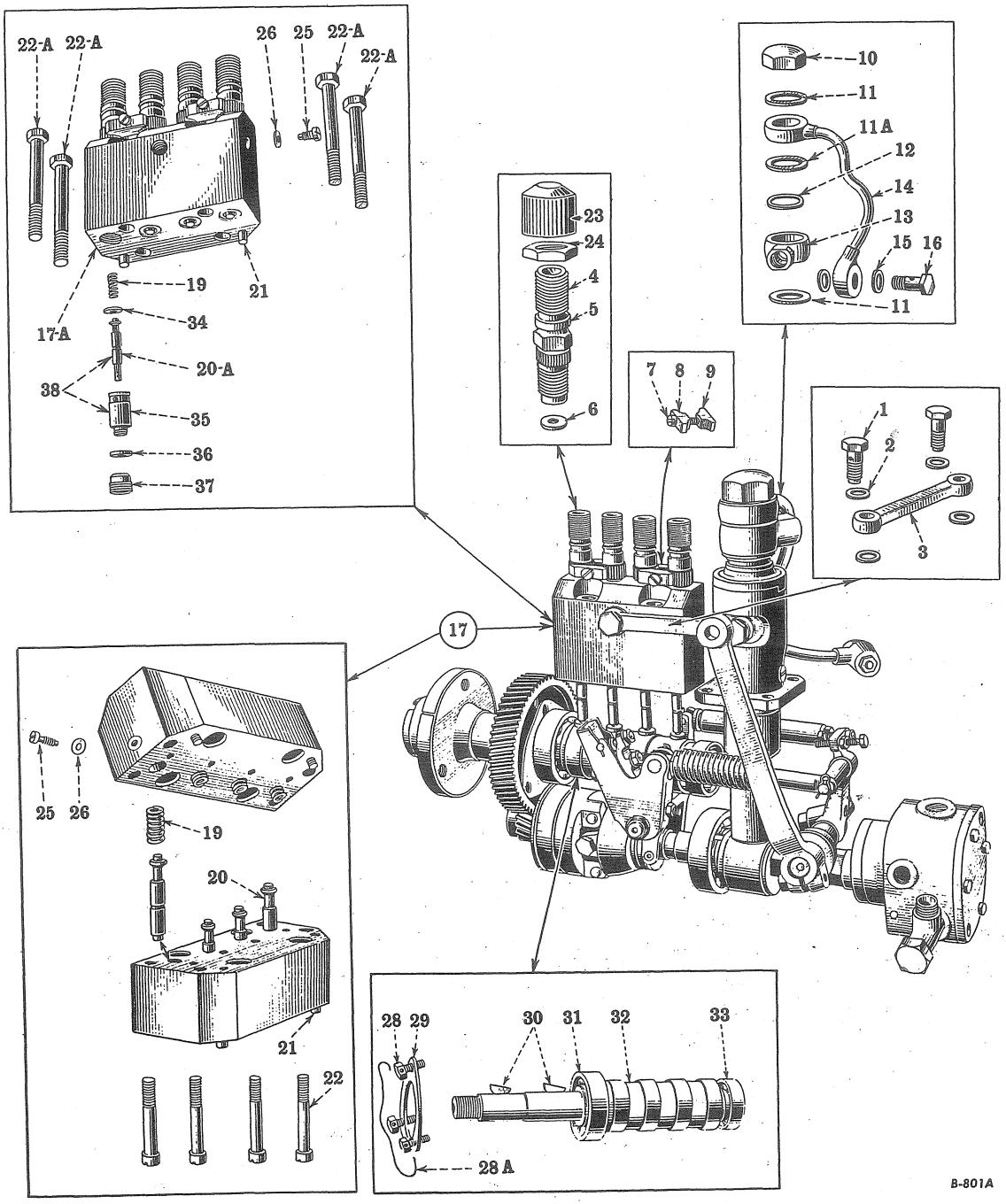

DISTRIBUTOR VALVE BLOCK, FUEL RETURN PIPE AND HIGH PRESSURE PIPE
(Plunger to Distributor)

Reference numbers only are shown in illustration. Use I H C part numbers in ordering.
Unnumbered parts in the illustrations are the same as corresponding parts shown with numbers.

DIESEL ENGINE

PART NUMBER	REF. NO.	DESCRIPTION	SERIAL NUMBER	NO. REQ'D	
		DISTRIBUTOR VALVE BLOCK, FUEL RETURN PIPE AND HIGH PRESSURE PIPE (Plunger to Distributor)			
59648 D	1	High Pressure Pipe Screw	Pumps 525 to 562	2	
66010 D	1	High Pressure Pipe Screw	Pumps 563 Up, Also 501 to 524	2	
59649 D	2	High Pressure Pipe Screw Gasket		4	
59647 D	3	High Pressure Pipe		1	
59612 D	4	Discharge Fitting (Order 64675 D)	Pumps 501 to 815	1	
64675 D	4	Discharge Fitting, Complete (Will Work for 59612 D)	Pumps 501 to 815	4	
64676 D	4	Discharge Fitting	Pumps 816 Up	4	
59618 D	5	Discharge Fitting Seal		4	
59613 D	6	Discharge Fitting Gasket		4	
59616 D	7	Discharge Fitting Lock Screw		2	
59614 DA	8	Discharge Fitting Lock		2	
59615 DA	9	Discharge Fitting Lock Nut		2	
59659 D	10	Fuel Return Pipe Cap		1	
59658 D	11	Fuel Return Pipe Large Washer		2	
59658 D	11A	Fuel Inlet Fitting Seal Washer		1	
59667 D	12	Fuel Inlet Fitting Seal		1	
59666 DX	13	Fuel Inlet Fitting with Seal, 59667 D and Washer, 59658 D		1	
59653 DA	14	Fuel Return Pipe, Complete		1	
59657 D	15	Fuel Return Pipe Small Washer		2	
59660 D	16	Fuel Return Pipe Screw		1	
59605 DX	17	Distributor Valve Lower Block, Valves and Studs			
		(Not Serviced Separately - Order 66011 DA)	Pumps 501 to 2999 Not **	1	
59607 DAX	17	Distributor Valve Upper Block, Complete			
		(Not Serviced Separately - Order 66011 DA)	Pumps 501 to 2999 Not **	1	
66012 D	17	Distributor Valve, Block, Complete (Order 66011 DA)	Pumps 501 to 2999 Not **	1	
66011 DA	17A	Distributor Valve Block, Complete			
		(Will Work for 59602 D, 59605 DX, 59607 DAX and 66012 D)	Pumps 3000 Up Also **	1	
66000 DAX	17A	Distributor Block with 2 Dowels, 59606 D	Pumps 3000 Up Also **	1	

Always give PUMP NUMBER and SERIAL NUMBERS when ordering Parts.

** 1201 to 1208 and 1210 to 1216

DIESEL ENGINE

PART NUMBER	REF. NO.	DESCRIPTION	SERIAL NUMBER	NO. REQ'D
59603 D	19	Distributor Valve Spring		4
59602 D	20	Distributor Valve		
		(Not Serviced Separately - Order 66011 DA)	Pumps 501 to 2999 Not **	4
66003 D	20A	Distributor Valve		
		(Not Serviced Separately - Order 68012 D, Ref. No. 38)	Pumps 3000 Up Also **	4
59606 D	21	Distributor Valve Block Dowel		2
59608 D	22	Valve Block Clamp Screw	Pumps 501 to 2999 Not **	4
66002 D	22A	Distributor Block Cap Screw	Pumps 3000 Up Also **	4
65355 D	23	Discharge Cap		
		(To Close Discharge Openings when Fuel Lines are Disconnected)		4
59617 D	24	Discharge Fitting Clamp Nut		4
59645 D	25	Distributor Valve Block Screw (6 Used 1129 to 4899)	Pumps 4900 Up	2
59646 D	26	Distributor Valve Block Screw Washer (6 Used 1129 to 4899)	Pumps 4900 Up	2
20000 D	28	Camshaft Bearing Retainer Screw		3
68419 D	28A	Camshaft Bearing Retainer Screw Lockwire (.0625 x 8" Long)		1
59673 D	29	Camshaft Bearing Retainer		1
7699 TM	30	Camshaft Key (Woodruff No. 5, 1/8 x 5/8")		2
8522 T	31	Camshaft Bearing, Large (ND 3204) (ST-207 IHC Will Work)		1
ST 207	31	Camshaft Bearing, Large IHC (Will Work for 8522 T)		1
59670 D	32	Camshaft		1
1265 C	33	Camshaft Bearing, Small (ND 3202)		1
66005 D	34	Distributor Valve Bushing Upper Gasket (.033" Thick)	Pumps 3000 Up Also **	x
67979 D	34	Distributor Valve Bushing Upper Gasket (.031" Thick)	Pumps 3000 Up Also **	x
67980 D	34	Distributor Valve Bushing Upper Gasket (.035" Thick)	Pumps 3000 Up Also **	x
66004 D	35	Distributor Valve Bushing		
		(Not Serviced Separately - Order 68012 D - Ref. No. 38)	Pumps 3000 Up Also **	4
66007 D	36	Distributor Valve Bushing Lower Gasket	Pumps 3000 Up Also **	4
66008 D	37	Distributor Valve Bushing Clamp	Pumps 3000 Up Also **	4
68012 D	38	Distributor Valve and Bushing		
		(Will Work for 66003 D Ref. No. 20A and 66004 D Ref. No. 35)	Pumps 3000 Up Also **	4

Always give PUMP NUMBER and SERIAL NUMBERS when ordering Parts. X As Required

** 1201 to 1208 and 1210 to 121

MEMORANDA

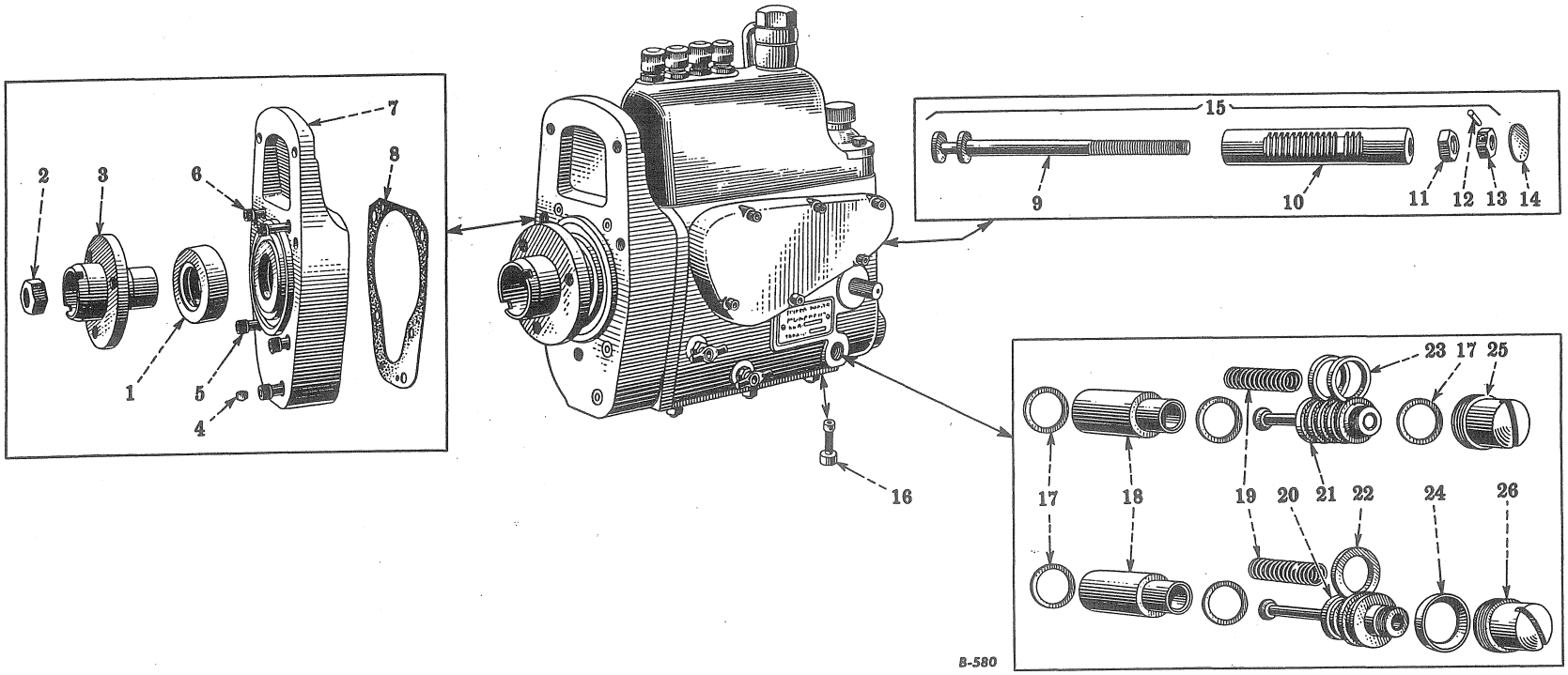

SCAVENGING VALVE, CONTROL RACK AND PUMP FLANGE

Reference numbers only are shown in illustration. Use I H C part numbers in ordering.
Unnumbered parts in the illustrations are the [illegible] as corresponding parts shown with numbers.

PART NUMBER	REF. NO.	DESCRIPTION	SERIAL NUMBER	NO. REQ'D
		SCAVENGING VALVE, CONTROL RACK AND PUMP FLANGE		
59675 D	1	Camshaft Oil Seal		1
59676 D	2	Camshaft Nut		1
62943 D	3	Injection Pump Gear Hub		1
59712 D	4	Pump Flange Capscrew Lock		5
59711 D	5	Pump Flange Cap Screw (5/16 x 1-3/4" N.C.) Socket Head		3
59710 D	6	Pump Flange Cap Screw (1/4 x 1-3/4" N.C.) Socket Head		2
8973 DX	7	Pump Flange with Oil Seal, 59675 D		1
59709 D	8	Pump Flange Gasket		1
59715 DA	9	Control Rack Adjustment Rod		1
59713 D	10	Control Rack (Order 69450 D)	Pumps 501 to 5874	1
69449 D	10	Control Rack	Pumps 5875 Up	1
59717 D	11	Control Rack Adjustment Rod Lock Nut		1
59688 D	12	Control Rack Adjustment Rod Nut Rivet		1
59716 D	13	Control Rack Adjustment Rod Nut		1
13090 D	14	Control Rack Plug (7/8" Expansion Plug)	Pumps 501 to 1128	1
49353 H	14	Control Rack Plug (15/16" Expansion Plug)	Pumps 1129 Up	1
59713 DX	15	Control Rack, Complete (Order 69450 D)	Pumps 501 to 5874	1
69450 D	15	Control Rack, Complete Will Work for 59713 D and 59713 DX	Pumps 5875 Up	1
63427 DX	16	Scavenging Strainer (In Pump Body Below Scavenging Valve)		1
61932 D	17	Scavenging Valve Body Gasket	Pumps 501 to 1119	3
			Pumps 1120 Up	2
61933 DX	18	Scavenging Valve Tappet and Guide		1
61929 D	19	Scavenging Valve Spring		1
66109 D	20	Scavenging Valve and Body	Pumps 1120 Up	1
61928 DX	21	Scavenging Valve and Body	Pumps 501 to 1119	1
65029 D	22	Scavenging Valve Body Seal	Pumps 1120 Up	
61931 D	23	Scavenging Valve Body Seal	Pumps 501 to 1119	2
65028 D	24	Scavenging Valve Body Cap Gasket	Pumps 1120 Up	1
61935 D	25	Scavenging Valve Cap	Pumps 501 to 1119	1
65027 D	26	Scavenging Valve Body Cap	Pumps 1120 Up	1
59609 D		Pump Flange Dowel		2
59714 D		Control Rack Locating Screw		1

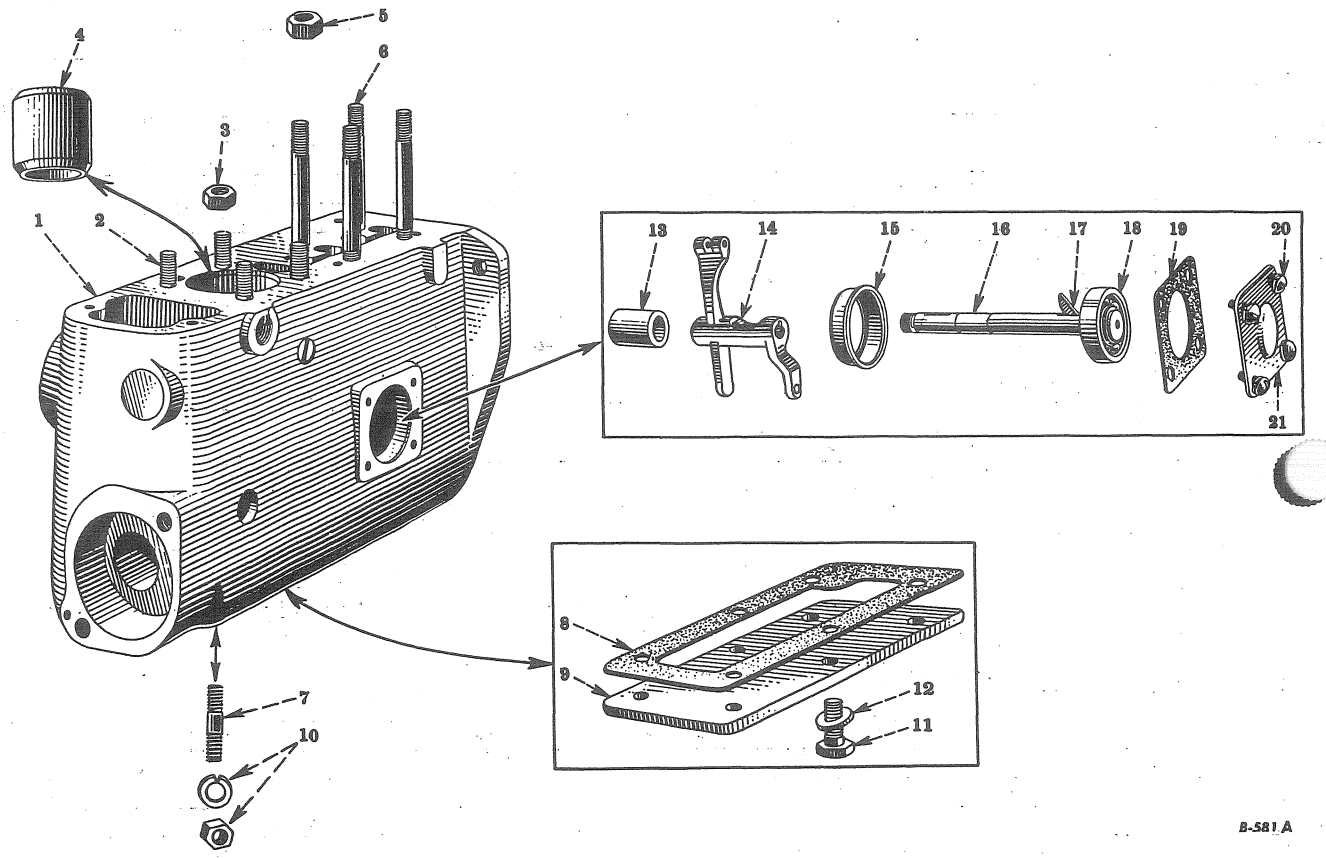

HOUSING, GOVERNOR FORK AND SHAFT

Reference numbers only are shown in illustration. Use I H C part numbers in ordering. Unnumbered parts in the illustrations are the same as corresponding parts shown with numbers.

HOUSING, GOVERNOR FORK AND SHAFT

PART NUMBER	REF. NO.	DESCRIPTION	SERIAL NUMBER	NO. REQ'D	
8970 DAY	1	Pump Housing, Complete (Will Work for 8970 DX)	Pumps 501 to 1119	1	
8970 DX	1	Pump Housing, Complete (Order 8970 DAY)	Pumps 501 to 1119	1	
8970 DAXA	1	Pump Housing, Complete	Pumps 1120 Up ‡	1	
59627 D	2	Plunger Bushing Retainer Stud		4	
59611 D	3	Plunger Bushing Retainer Stud Nut		4	
59636 D	4	Plunger Tappet Bushing (In Housing)		1	
59611 D	5	Valve Block Stud Nut	Pumps 501 to 2999 Not *	4	
59610 D	6	Valve Block Stud	Pumps 501 to 2999 Not *	4	
59706 D	7	Pump Housing Bottom Plate Stud	Pumps 501 to 890	6	
59705 D	8	Pump Housing Bottom Plate Gasket		1	
59704 D	9	Pump Housing Bottom Plate		1	
	10	Hex Nut, 1/4" N.F. (Pump Housing Bottom Plate Stud)	Pumps 501 to 890	6	
	10	Hex Nut Lockwasher, 1/4" (Pump Housing Bottom Plate Stud)	Pumps 501 to 890	6	
65056 D	11	Pump Housing Bottom Plate Capscrew	Pumps 891 Up	6	
25176 D	12	Pump Housing Bottom Plate Screw Gasket	Pumps 891 Up	6	
61940 D	13	Governor Fork Shaft Spacer		1	
59760 DA	14	Governor Fork		1	
61942 D	15	Governor Fork Shaft Bearing Cage		1	
59762 DX	16	Governor Fork Shaft, Complete		1	
59734 DA	17	Governor Fork Key		1	
1100 C	18	Governor Fork Shaft Ball Bearing (ND 3200)		1	
59698 D	19	Pump Housing Back Cover Gasket		1	
	20	Machine Screw, No. 10 - 32 x 3/8" Round Head (Granodize) (Pump Housing Back Cover)		4	
	20	Machine Screw Lockwasher, No. 10 Pump Housing Back Cover		4	
59697 D	21	Pump Housing Back Cover		1	
40329 DA		Number Plate Securing Rivet		2	

Always give PUMP NUMBER and SERIAL NUMBERS when ordering Parts.

* 1201 to 1208 and 1210 to 1216

‡ When 8970 DAXA is Furnished for Replacement on Pumps 1120 to 2999 but not *, 4 Valve Block Studs 59610 D must also be Supplied

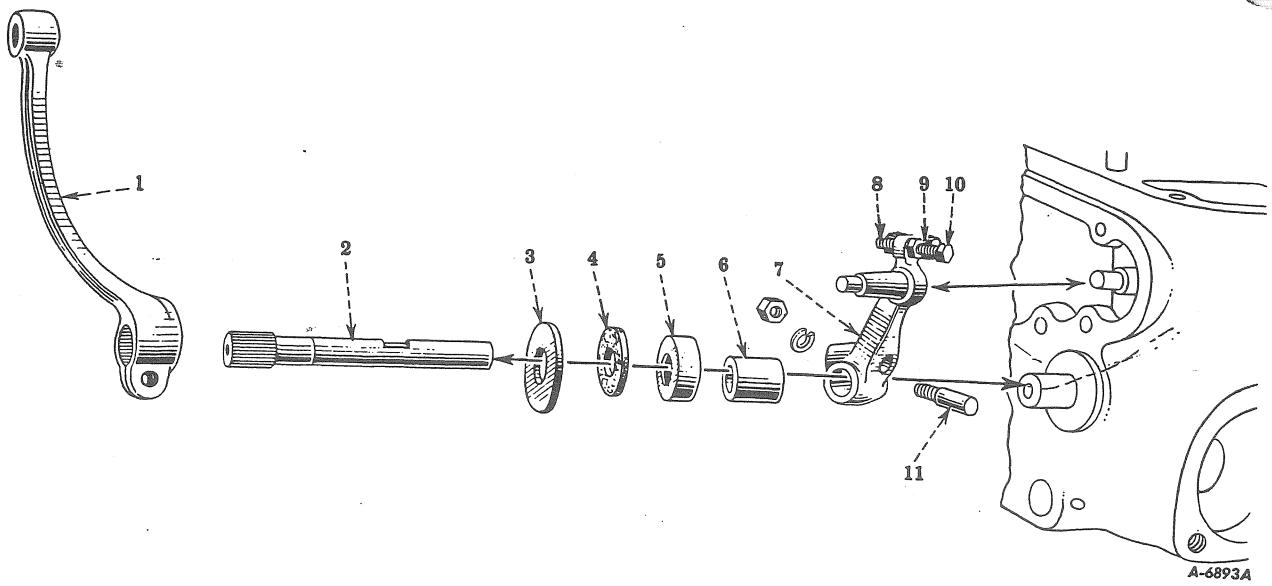

Reference numbers only are shown in illustration. Use I H C part numbers in ordering.
Unnumbered parts in the illustrations are the same as corresponding parts shown with numbers.

CONTROL LEVER

59718 D	1	Control Lever	1	
		Cap Screw, 1/4 x 7/8" N.F. Hex Head	1	
		Lockwasher, 1/4"	1	
66241 DM	1	Control Lever (*Used on Modified Unit Adams 80 and 86)	1	
59719 DA	2	Control Lever Shaft	1	
59720 D	3	Control Lever Shaft Washer	1	
59721 D	4	Control Lever Felt Washer	1	
59722 D	5	Control Lever Oil Seal	1	
8976 D	6	Pump Housing Bushing	1	
59724 DAX	7	Governor Spring Lever with Arm	1	
59723 D	8	Governor Spring Lever Stop, Short	1	
61939 D	9	Governor Spring Lever Stop Nut	2	
64043 D	10	Governor Spring Lever Stop, Long	1	
64070 D	11	Governor Spring Lever Screw	1	
		Hex Nut, 1/4" N.F.	1	
		Lockwasher, 1/4"	1	
		(*) - For Tabulation of Modifications see Introduction Page		

CHASSIS

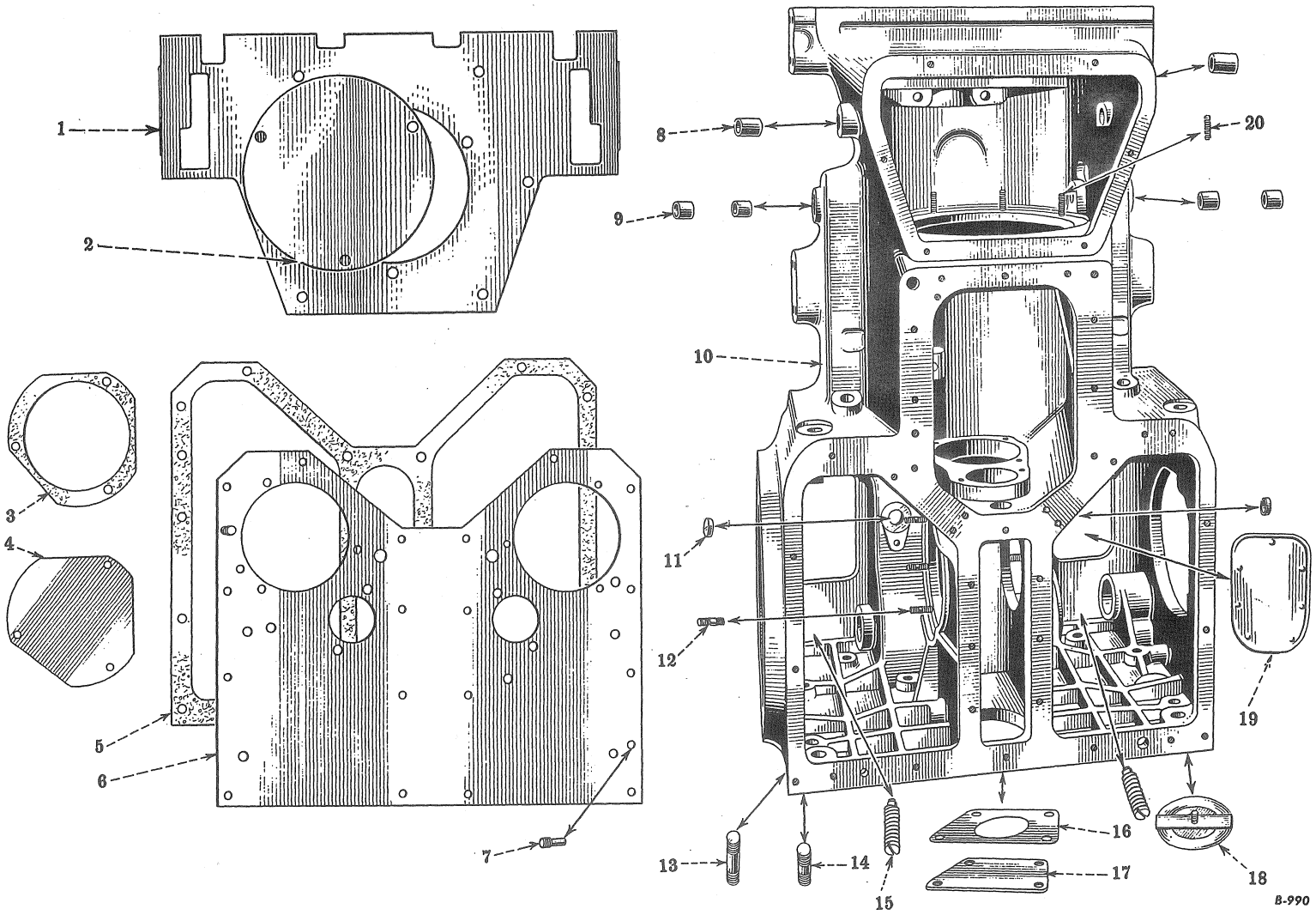

MAIN FRAME AND COVERS

Reference numbers only are shown in illustrations. Use I H C part numbers in ordering.

Unnumbered parts in the illustrations are the same as corresponding parts shown with numbers.

CHASSIS

MAIN FRAME AND COVERS

PART NUMBER	REF. NO.	DESCRIPTION	SERIAL NUMBER	NO. REQ'D	
53491 DX	1	Engine Clutch Cover		1	
		Cap Screw, 3/8 x 3/4" N.C. Hex. Head		6	
		Lockwasher, 3/8"		6	
		Welding Nut, 3/8" N.C.		3	
46304 D	2	Engine Clutch Inspection Cover		1	
		Cap Screw, 3/8 x 5/8" N.C. Hex. Head		3	
		Lockwasher, 3/8"		3	
53714 D	3	Steering Clutch Inspection Cover Gasket		2	
53559 D	4	Steering Clutch Inspection Cover		2	
		Cap Screw, 5/16 x 1/2" N.F. Hex. Head		6	
		Lockwasher, 5/16"		6	
52256 D	5	Main Frame Cover Gasket		1	
52255 DX	6	Main Frame Cover with Battery Spacers		1	
		Cap Screw, 7/16 x 1" N.C. Hex. Head		20	
		Cap Screw, 1/2 x 3/4" N.C. Hex. Head		4	
		Lockwasher, 7/16"		20	
		Lockwasher, 1/2"		4	
		Welding Nut, 3/8" N.C.		1	
		Welding Nut, 7/16" N.C.		8	
18585 DA	7	Main Frame Cover Dowel Pin		2	
45120 D	8	Engine Clutch Release Shaft Bushing		2	
46332 D	9	Steering Brake Operating Shaft Bushing		4	
8514 DBX	10	Main Frame, Complete		1	
		Pipe Plug, 1/2" Socket Head		1	
		Pipe Plug, 1" Socket Head		2	
		Cork, 1 x 1-1/4 Dia. x 1-1/4" Long		4	
		Cork, 1/2 x 11/16 Dia. x 7/8" Long		2	
		Cork, 3/4 x 15/16 Dia. x 1-1/8" Long		7	
		Pipe Plug, 1-1/4" Socket Head		1	
41600 D	11	Steering Brake Pivot Shaft Cup Plug (Will Work for 48075 D)		2	
48075 D	11	Steering Brake Pivot Shaft Cup Plug (Order 41600 D)		2	
55539 D	12	Drive Bevel Gear Bearing Cage Stud		8	
57382 D	13	Drawbar Guide Bracket Stud, Lower	TCB 987 Up	4	
		Hex. Nut, 3/4" N.F.		4	
57383 D	14	Drawbar Guide Bracket Stud, Upper	TCB 987 Up	2	
		Hex. Nut, 3/4" N.F.		2	
46809 D	15	Track Frame Pivot Shaft Set Screw		2	
		Hex. Jam Nut, 5/8" N.C.		2	
48073 D	16	Power Take-Off Cover Gasket		1	
48072 D	17	Power Take-Off Cover		1	
		Cap Screw, 5/8 x 1" N.C. Hex. Head		4	
		Lockwasher, 5/8"		4	
42297 D	18	Steering Clutch Lubricating Port Cover with Clamp and Bolt		2	
48044 D	19	Steering Brake Inspection Cover		2	
		Cap Screw, 3/8 x 1" N.C. Hex. Head		14	
		Lockwasher, 3/8"		14	
53715 D	20	Transmission End Cover Stud		4	

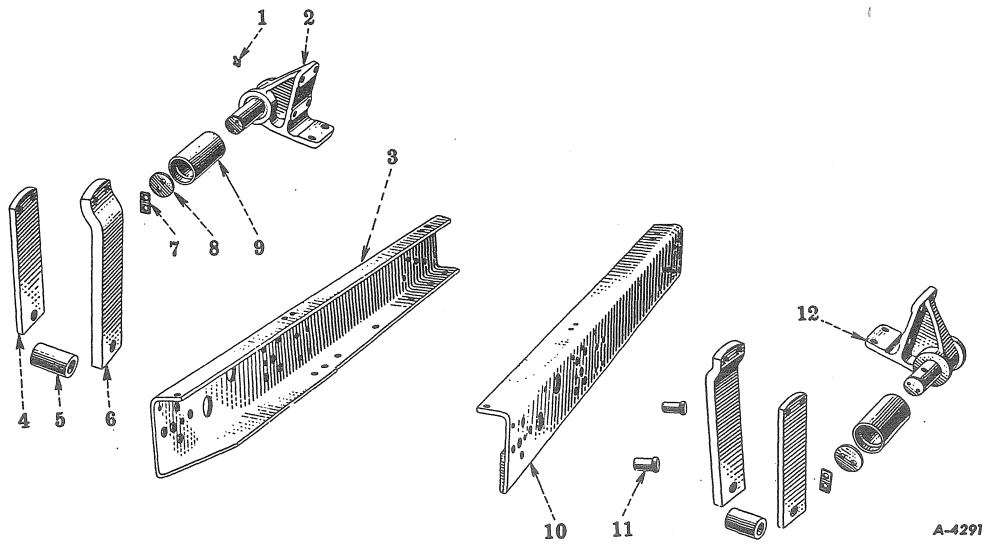

Reference numbers only are shown in illustration. Use I H C part numbers in ordering.
Unnumbered parts in the illustrations are the same as corresponding parts shown with numbers.

MAIN FRAME CHANNELS, TRACK FRAME GUIDE, ROLLERS AND BRACKETS

Q 3615	1	Track Frame Guide Roller Lubricator		
		(Not Rigid Track Frame)	2	
8489 DBX	2	Track Frame Guide Roller Bracket, L. H. with Shaft		
		(Wide Tread)(Not Rigid Track Frame)	1	
		Cap Screw, 5/8 x 1-3/4" N.F. Hex. Head	6	
		Hex. Nut, 5/8" N.F.	6	
		Lockwasher, 5/8"	6	
8491 DAX	2	Track Frame Guide Roller Bracket, L.H. with Shaft		
		(Not Wide Tread)	1	
		Cap Screw, 5/8 x 1-3/4" N.F. Hex. Head	6	
		Hex. Nut, 5/8" N.F.	6	
		Lockwasher, 5/8"	6	
250288 R11	2	Track Frame Guide Roller Bracket L.H. with Shaft		
		(⊛ Used on Modified Units Bucyrus-Erie No. 30 and 31)	1	
		Cap Screw, 5/8 x 1-3/4" N.F. Hex Head	6	
		Hex Nut 5/8" N.F.	6	
		Lockwasher, 5/8"	6	
250289 R11	2	Track Frame Guide Roller Bracket L.H. with Shaft		
		(⊛ Used on Modified Units Bucyrus-Erie No. 30 and 31)	1	
		Cap Screw, 5/8 x 1-3/4" N.F. Hex Head	6	
		Hex Nut, 5/8" N.F.	6	
		Lockwasher, 5/8"	6	
		⊛ - For Tabulation of Modifications see Introduction Page		

CHASSIS

PART NUMBER	REF. NO.	DESCRIPTION	SERIAL NUMBER	NO. REQ'D
53894 D	3	Main Frame Side Channel, L.H.		1
		Cap Screw, 5/8 x 1-1/2" N.C. Hex. Head		4
		Cap Screw, 3/4 x 1-3/4" N.C. Hex. Head		4
		Cap Screw, 7/8 x 2" N.C. Hex. Head		4
		Lockwasher, 5/8"		4
		Lockwasher, 3/4"		4
		Lockwasher, 7/8"		4
53893 D	4	Track Frame Guide Plate, Inner		
		(Not Rigid Track Frame)	TCB 501 to 8761	2
		Cap Screw, 5/8 x 2" N.F. Hex. Head		4
		Lockwasher, 5/8"		4
65868 D	4	Track Frame Guide Plate, Inner (Not Rigid Track Frame)	TCB 8762 Up	2
		Cap Screw, 5/8 x 2-1/4" N.F. Hex. Head		4
		Lockwasher, 5/8"		4
49587 D	5	Track Frame Guide Spacer		
		(Not Rigid Track Frame)		2
53892 D	6	Track Frame Guide Plate, Outer		
		(Not Rigid Track Frame)	TCB 501 to 8761	2
		Cap Screw, 5/8 x 1-1/2" N.F. Hex. Head		4
		Cap Screw, 7/8 x 4-3/4" N.F. Hex. Head		2
		Lockwasher, 5/8"		4
		Lockwasher, 7/8"		2
65869 D	6	Track Frame Guide Plate, Outer (Not Rigid Track Frame)	TCB 8762 Up	2
		Cap Screw, 5/8 x 1-3/4" N.C. Hex. Head		4
		Cap Screw, 7/8 x 5" N.C. Hex. Head		2
		Lockwasher, 5/8"		4
		Lockwasher, 7/8"		2
47991 D	7	Track Frame Guide Roller Retaining Washer Lock		
		(Not Rigid Track Frame)		2
47990 D	8	Track Frame Guide Roller Retaining Washer		
		(Not Rigid Track Frame)		2
		Cap Screw, 3/8 x 3/4" N.F. Hex. Head		4
47979 D	9	Track Frame Guide Roller		
		(Not Rigid Track Frame)		2
53895 D	10	Main Frame Side Channel, R.H.		1
		Cap Screw, 5/8 x 1-1/2" N.C. Hex. Head		4
		Cap Screw, 3/4 x 1-3/4" N.C. Hex. Head		4
		Cap Screw, 7/8 x 2" N.C. Hex. Head		4
		Lockwasher, 5/8"		4
		Lockwasher, 3/4"		4
		Lockwasher, 7/8"		4
48074 D	11	Main Frame Side Channel Dowel		4
8490 DBX	12	Track Frame Guide Roller Bracket, R.H. with Shaft		
		(Wide Tread)(Not Rigid Track Frame)		1
		Cap Screw, 5/8 x 1-3/4" N.F. Hex. Head		6
		Hex. Nut, 5/8" N.F.		6
		Lockwasher, 5/8"		6
8492 DAX	12	Track Frame Guide Roller Bracket, R.H. with Shaft		
		(Not Wide Tread)		1
		Cap Screw, 5/8 x 1-3/4" N.F. Hex. Head		6
		Hex. Nut, 5/8" N.F.		6
		Lockwasher, 5/8"		6

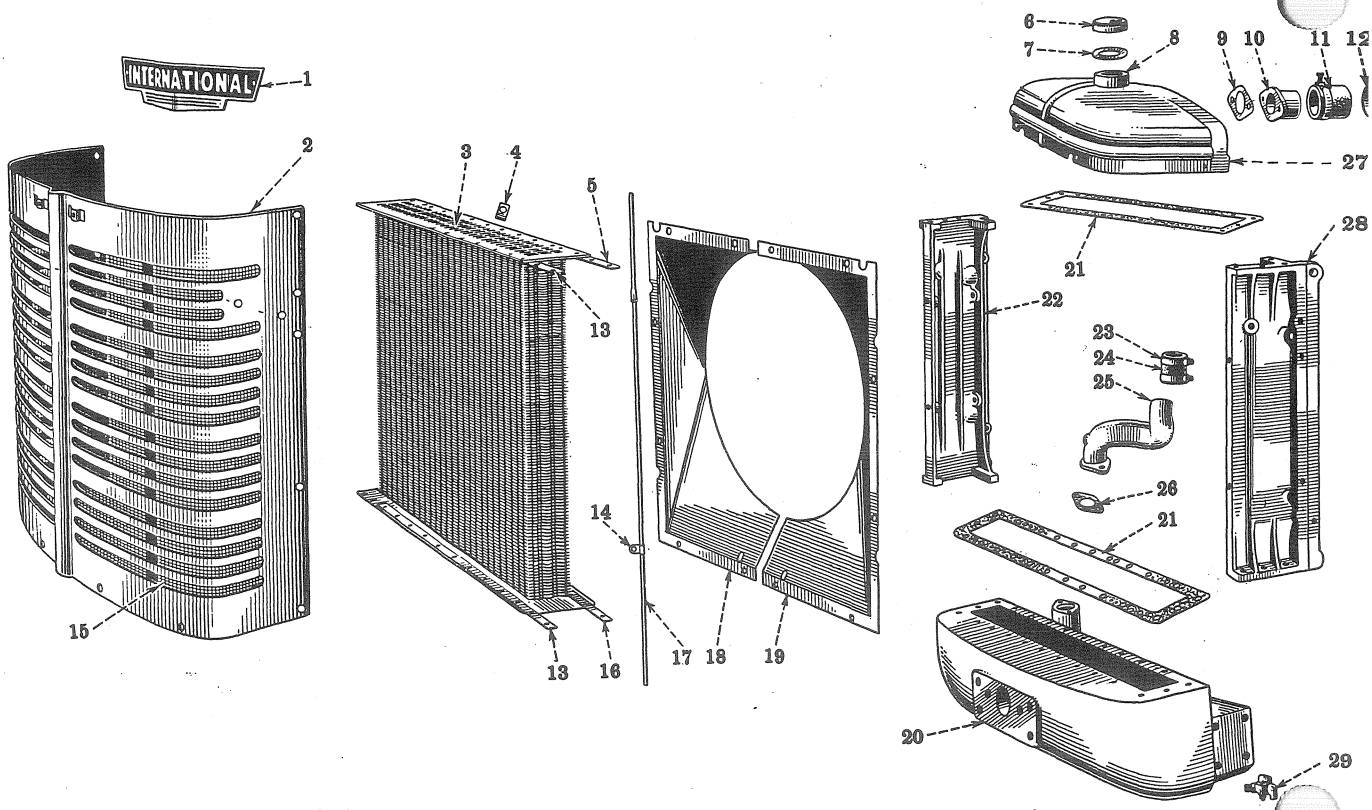

Reference numbers only are shown in illustration. Use I H C part numbers in ordering.
Unnumbered parts in the illustrations are the same as corresponding parts shown with numbers.

RADIATOR AND CONNECTIONS

48150 DC		Radiator, Complete		1	
55875 DC		Radiator, Complete (*Used on Modified Units Adams 70, 75, 80 and 86)		1	
45992 D	1	Name Plate		1	
		Screw, No. 8 - 32 x 3/8" Oval Head (Cadmium Plated)		2	
48151 DA	2	Radiator Grille, Complete		1	
		Cap Screw, 5/16 x 5/8" N.C. Hex. Head		14	
		Lockwasher, 5/16"		14	
		Steel Washer, 11/32" I.D. x 3/4" O.D. x No. 16 Ga.		14	
55876 D	2	Radiator Grille (*Used on Modified Units Adams 70, 75, 80 and 86)		1	
48165 DA	3	Radiator Core		1	
52833 D	4	Radiator Overflow Pipe Gasket		1	
48158 D	5	Radiator Core Stiffener, Upper Rear		1	
		Cap Screw, 5/16 x 7/8" N.C. Hex. Head		6	
		Lockwasher, 5/16"		6	
43983 D	6	Radiator Cap		1	
43984 D	7	Radiator Cap Gasket		1	
43891 DA	8	Radiator Filler Neck		1	
22383 D	9	Radiator Inlet Pipe Gasket		1	
6297 D	10	Radiator Inlet Pipe		1	
		Cap Screw, 3/8 x 1" N.C. Hex. Head		2	
		Lockwasher, 3/8"		2	
16077 D	11	Radiator Inlet Hose, 2-1/8" I.D. x 2-3/8" Long, 3 Ply	TCB 501 to 3330	1	
55175 D	11	Radiator Inlet Hose, 2-1/8" I.D. x 2-3/4" Long, 3 Ply	TCB 3331 Up	1	
		(*) - For Tabulation of Modifications see Introduction Page			

CHASSIS

PART NUMBER	REF. NO.	DESCRIPTION	SERIAL NUMBER	NO. REQ'D	
81448 H	12	Radiator Inlet Hose Clamp (Order 91406 HA)		2	
91406 HA	12	Radiator Inlet Hose Clamp (Will Work for 81448 H)		2	
48160 D	13	Radiator Core Stiffener, Front		2	
		Cap Screw, 5/16 x 7/8" N.C. Hex Head		16	
		Lockwasher, 5/16"		16	
		Hex Nut, 5/16" N.C.		2	
26143 D	14	Radiator Overflow Pipe Clip		1	
		Cap Screw, 5/16 x 3/4" N.C. Hex Head		1	
		Lockwasher, 5/16"		1	
49076 D	15	Radiator Grille Screen		1	
48159 D	16	Radiator Core Stiffener, Lower Rear		1	
		Cap Screw, 5/16 x 7/8" N.C. Hex Head		6	
		Lockwasher, 5/16"		6	
48157 DX	17	Radiator Overflow Pipe with Sleeve		1	
48170 D	18	Fan Housing Sheet, R.H. (TD 9)		1	
		Cap Screw, 5/16 x 5/8" N.C. Hex Head		5	
		Lockwasher, 5/16"		5	
54502 D	18	Fan Housing Sheet, R.H. (T 9)		1	
		Cap Screw, 5/16 x 5/8" N.C. Hex Head		5	
		Lockwasher, 5/16"		5	
48169 D	19	Fan Housing Sheet, L.H. (TD 9)		1	
		Cap Screw, 5/16 x 5/8" N.C. Hex Head		6	
		Lockwasher, 5/16"		6	
54501 D	19	Fan Housing Sheet, L.H. (T 9)		1	
		Cap Screw, 5/16 x 5/8" N.C. Hex Head		6	
		Lockwasher, 5/16"		6	
6627 DA	20	Water Tank, Lower		1	
8658 DA	20	Water Tank, Lower (*Used on Modified Units Adams 70, 75, 80 and 86)		1	
48164 D	21	Radiator Gasket		2	
6625 DA	22	Radiator Core Spacer, R.H.		1	
		Cap Screw, 7/16 x 1-1/4" N.C. Hex Head		6	
		Cap Screw, 7/16 x 1-1/2" N.C. Hex Head		2	
		Lockwasher, 7/16"		8	
81448 H	23	Radiator Outlet Hose Clamp (Order 91406 HA)		2	
91406 HA	23	Radiator Outlet Hose Clamp (Will Work for 81448 H)		2	
16077 D	24	Radiator Outlet Hose, 2-1/8" I.D. x 2-3/8" Long, 3 Ply		1	
6628 D	25	Radiator Outlet Elbow (TD 9)		1	
		Cap Screw, 3/8 x 1" N.C. Hex. Head		2	
		Lockwasher, 3/8"		2	
8560 D	25	Radiator Outlet Elbow (T 9)		1	
		Cap Screw, 3/8 x 1" N.C. Hex. Head		2	
		Lockwasher, 3/8"		2	
9329 DM	25	Radiator Outlet Elbow (*Used on Modified Units Adams 75)		1	
22383 D	26	Radiator Outlet Elbow Gasket		1	
6626 DX	27	Water Tank, Upper with Filler Neck, 43891 DA		1	
6624 DA	28	Radiator Core Spacer, L.H.		1	
		Cap Screw, 7/16 x 1-1/4" N.C. Hex Head		6	
		Cap Screw, 7/16 x 1-1/2" N.C. Hex Head		2	
		Lockwasher, 7/16"		8	
42605 D	29	Radiator Drain Cock		1	
27 843 D	29	Radiator Drain Plug (*Used on Modified Units Adams 70, 75, 80 and 86)		1	
48168 D		Radiator Repair Tube			
		(*) - For Tabulation of Modifications see Introduction Page			

(Revised 2-'46)

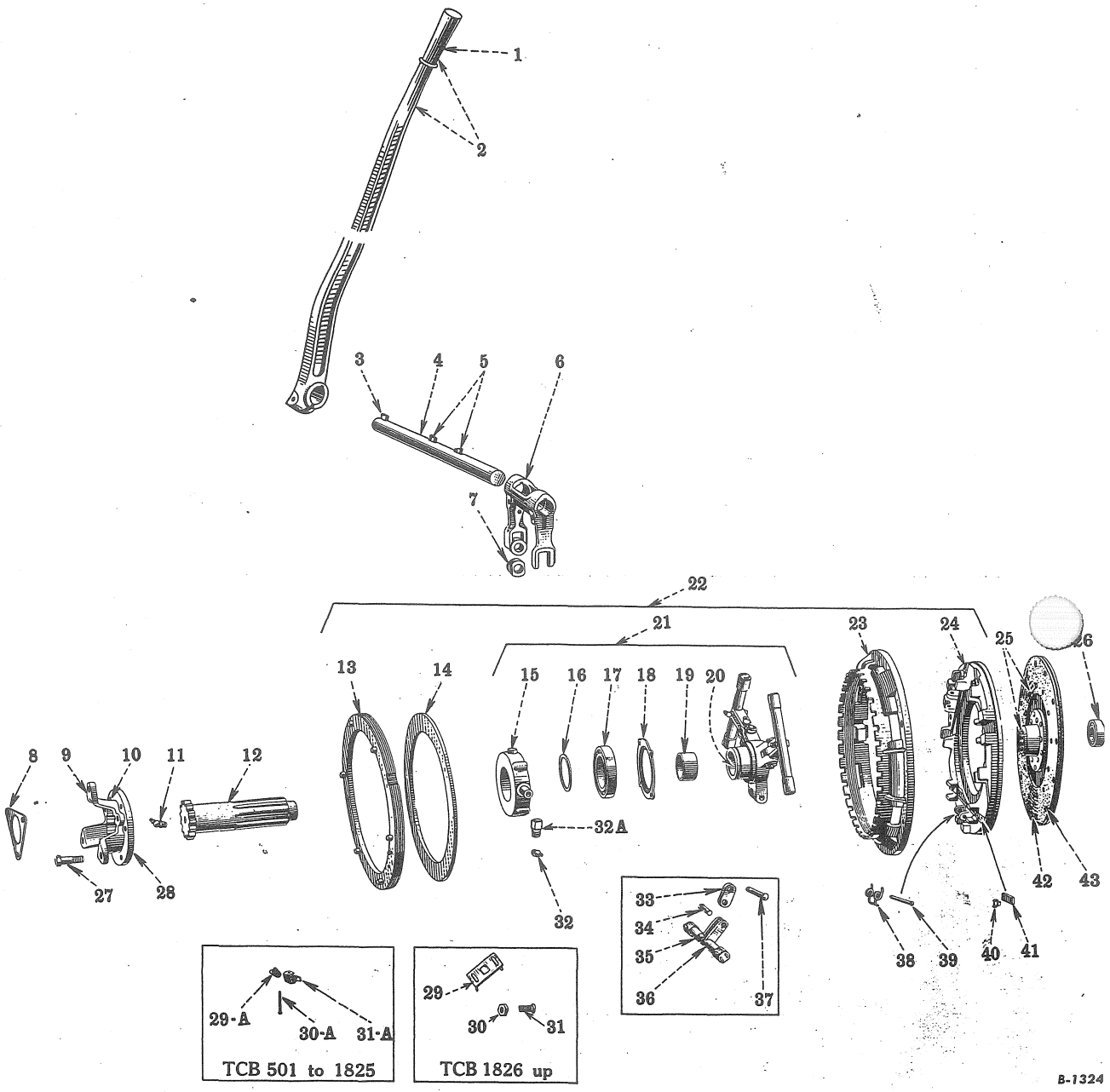

OVER-CENTER CLUTCH. CLUTCH CONTROL AND CONNECTIONS

Reference numbers only are shown in illustration. Use I H C part numbers in ordering.
Unnumbered parts in the illustrations are the same as corresponding parts shown with numbers.

PART NUMBER	REF. NO.	DESCRIPTION	SERIAL NUMBER	NO. REQ'D
		CLUTCH CONTROL AND CONNECTIONS (Hand Operated Over-Center Clutch)		
41597 D	1	Engine Clutch Hand Lever Handle (Used with Lever 8442 DAX)		1
8442 DAX	2	Engine Clutch Hand Lever with Handle, 41597 D		
		(9652 DA Will Work)		1
		Cap Screw, 1/2 x 2-1/2" N.F. Hex. Head		1
		Hex. Nut, 1/2" N.F.		1
		Lockwasher, 1/2"		1
9652 DA	2	Engine Clutch Hand Lever (One Piece) (8442 DAX Will Work)		1
		Cap Screw, 1/2 x 2-1/2" N.F. Hex. Head		1
		Hex. Nut, 1/2" N.F.		1
		Lockwasher, 1/2"		1
9694 D	2	Engine Clutch Handle Lever		
		(*Used on Modified Units Bucyrus-Erie No. 30- and 31-)		1
		Cap Screw, 1/2 x 2-1/2" N.F. Hex Head		1
		Hex Nut, 1/2" N.F.		1
		Lockwasher, 1/2"		1
10430 V	3	Engine Clutch Hand Lever Key (Woodruff No. 18)		1
53494 D	4	Engine Clutch Release Shaft		1
13054 D	5	Engine Clutch Release Fork Key (Woodruff No. 13)		2
8247 DA	6	Engine Clutch Release Fork		1
		Cap Screw, 3/8 x 1-1/2" N.F. Hex. Head		2
		Lockwasher, 3/8"		2
51227 D	7	Engine Clutch Release Pin Bushing		2
47593 D	8	Engine Clutch Shaft End Plate		1
		Cap Screw, 5/16" x 3/4" N.F. Hex, Head		3
		Lockwasher, 5/16"		3
6492 DX	9	Engine Clutch Coupling with Brake Disc Facing,		
		47591 D and 6 Rivets, 21407 H		1
21407 H	10	Engine Clutch Brake Disc Facing Rivet, .186 x 7/16" Type "C"		
		(Plain Brass)(Will Work for 21444 H)	TCB 1593 Up	6
21444 H	-10	Engine Clutch Brake Disc Facing Rivet, .186 x 1/2" Type "C"		
		(Plain Brass)(Order 21407 H)	TCB 501 to 1592	6
Q 3621	11	Engine Clutch Pilot Bearing Lubricator (Order Q 3673)		1
Q 3673	11	Engine Clutch Pilot Bearing Lubricator (Will Work for Q 3621)		1
47589 D	12	Engine Clutch Shaft		1
23681 D	26	Clutch Pilot Ball Bearing, (N.D. 7506) (St 211 Will Work)		1
ST 211	26	Clutch Pilot Ball Bearing (I.H.C.) (23681 D Will Work)		1
45437 D	27	Engine Clutch Coupling Dowel Bolt (Order 54969 D)	TCB 501 to 1481	3
		Hex. Nut, 7/16" N.F.		3
		Lockwasher, 7/16"		3
54969 D	27	Engine Clutch Coupling Dowel Bolt (Will Work for 45437 D)	TCB 1482 Up	3
		Hex. Nut, 7/16" N.F.		3
		Lockwasher, 7/16"		3
47591 D	28	Engine Clutch Brake Disc Facing		1
Q 3626	32	Engine Clutch Release Bearing Lubricator	TCB 501 to 16548	1
Q 3620	32	Engine Clutch Release Bearing Lubricator	TCB 16549 up	1
138321 H	32A	Engine Clutch Release Bearing Lubricator Angle Elbow	TCB 16549 up	1
		(*) - For Tabulation of Modifications see Introduction Page		

I H C PART NUMBER	REF. NO.	MFR'S. NUMBER	DESCRIPTION	SERIAL NUMBER	NO. REQ'D
			ENGINE OVER-CENTER CLUTCH, 13" (Hand Operated) (Rockford Drilling Machine)		
51225 DD		CLA-1361 AC	Engine Clutch, Complete, 55228 DD with Driven		
			Member, 51524 D		1
			Cap Screw, 1/2 x 1-3/8" N.C. Hex Head		6
			Lockwasher, 1/2"		6
55371 DAX	13	UCL-4815-1	Adjusting Ring with Lock, 61127 D,		
			2 Screws, 61115 D and 2 Nuts, 27166 H		1
31238 D	14	CL-3461	Adjusting Ring Plate		1
55232 DA	15	CL-4649	Bearing Carrier		1
29780 D	16	CL-3302	Snap Ring		1
31240 D	17	CL-3353	Ball Bearing (ND-3115)		1
31242 DA	18	CL-3401-4	Bearing Plate		1
		CL-3994	Cap Screw, 5/16 - 18 x 5/8" Hex. Head		4
		CL-3920	Lockwasher, 5/16"		4
26039 DA	19	CL-3110	Bushing		2
55229 DAXA	20	UCL-4840-1	Sleeve with 2 Bushings, 26039 DA		1
55230 DB	21	UCL-4840-1A	Sleeve with Bearing, Complete		1
55228 DD	22	UCLA-6-4539	Clutch, Complete, Less Driven Member		1
50433 D	23	CL-4539	Back Plate		1
51521 D	24	UCL-4349	Pressure Plate with Set of Six Cam Blocks,		
			43248 D-Ref. No. 41		
51524 D	25	UCL-4541	Driven Member, Complete		1
	26		See Clutch Control and Connection		
	27		See Clutch Control and Connection		
	28		See Clutch Control and Connection		
61127 D	29	CL-5223	Adjusting Lock	TCB 1826 Up	1
54956 D	29A	CL-4809	Adjusting Lock Spring	TCB 501 to 1825	1
27166 H	30	CL-1608	Adjusting Lock Screw Nut	TCB 1826 Up	2
55267 D	30A	CL-4807	Adjusting Lock Pin	TCB 501 to 1825	1
61115 D	31	CL-5215	Adjusting Lock Screw	TCB 1826 Up	2
54957 D	31A	CL-4808	Adjusting Lock	TCB 501 to 1825	1
43207 D	33	CL-4339-1	Connecting Link		3
N 32202	34	CL-4341	Link Pin, Short		3
		CL-4347	Steel Washer, 3/8" I.D. x 7/8" O.D. x No. 16 Ga.		3
		CL-4597	Spring Cotter, 1/8 x 5/8"		3
Q 3627	35		Camshaft Lubricator	TCB 541 Up	3
55231 DXA	36		Cam Shaft, Complete (Order 55231 DYA)		3
55231 DYA	36	UCL-2-4337-			
273171R91		2-S3A	Set of Three Cam Shafts and Set of Six Cam Blocks,		
273171R92			43248 D (Will Work for 55231 DXA)		1
43211 D	37	CL-4340	Link Pin, Long		3
		CL-4347	Steel Washer, 3/8" I.D. x 7/8" O.D. x No. 16 Ga.		3
		CL-4597	Spring Cotter, 1/8 x 5/8"		3
50431 D	38	CL-4351	Return Spring		3
50430 D	39	CL-4350	Return Spring Pin		3
		CL-3923	Spring Cotter, 1/16 x 1/2"		3
54953 D	40	CL-4799	Screw Lock (For Cam Block Screws)		6
31231 D	41	CL-3478	Cam Block (Order 43248 D)		6
43248 D	41	UCL-3478-S6	Set of Six Cam Blocks, Complete		1
55233 DX	42	CL-4175	Clutch Facing Package (2 Facings)		1
50413 D	43	CL-1011-5	Tubular Rivets		24

MEMORANDA

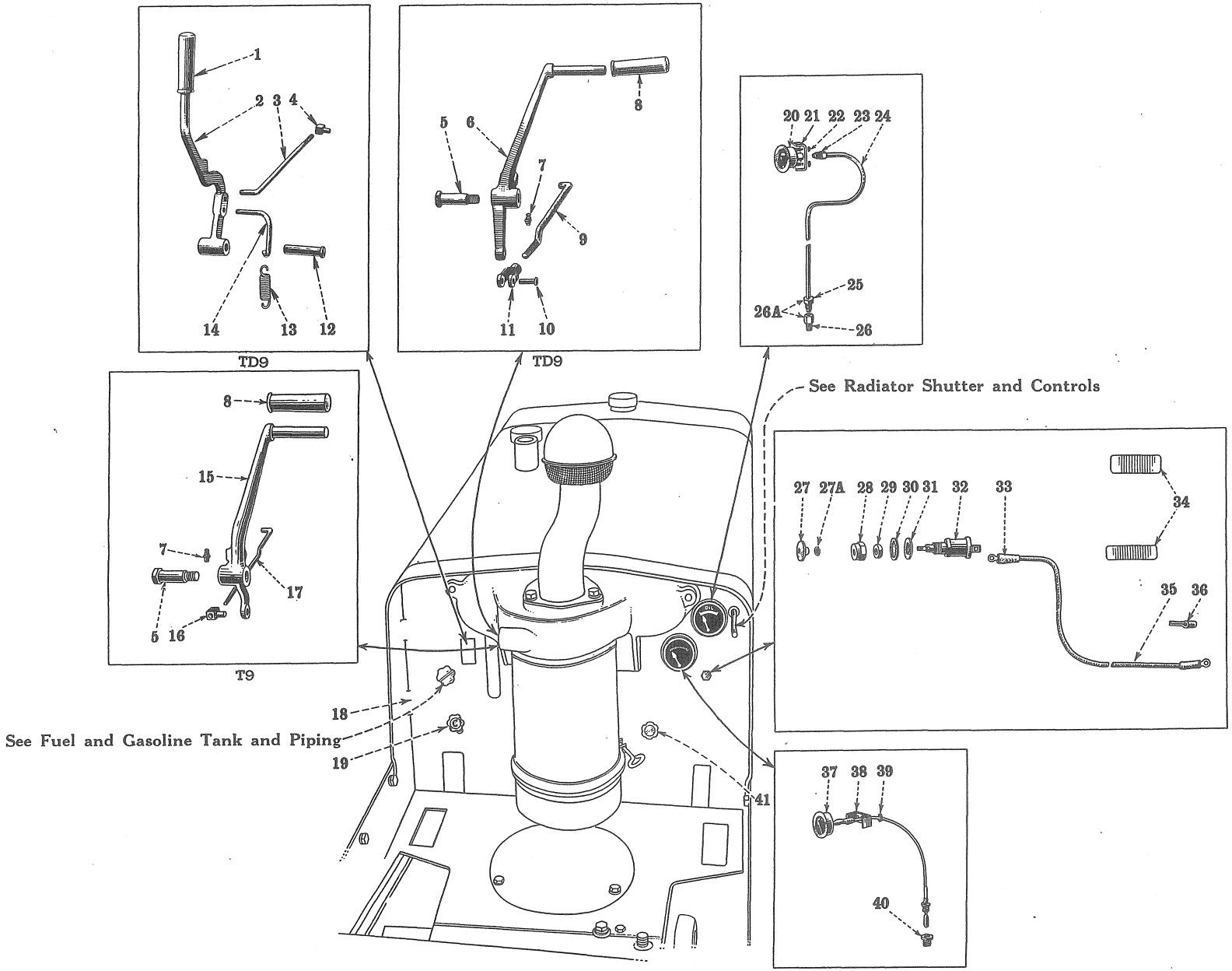

ENGINE CONTROLS, INSTRUMENTS, DASH AND COWL

Reference numbers only are shown in illustrations. Use I H C part numbers in ordering.

Unnumbered parts in the illustrations are the same as corresponding parts shown with numbers.

PART NUMBER	REF. NO.	DESCRIPTION	SERIAL NUMBER	NO. REQ'D	
		ENGINE CONTROLS, INSTRUMENTS, DASH AND COWL			
41597 D	1	Compression Release Lever Handle (Used with Lever 8427 DX)		1	
8427 DX	2	Compression Release Lever with Handle, 41597 D (TD 9)		1	
		(9634 D Will Work)			
9634 D	2	Compression Release Lever (TD 9) (8427 DX Will Work)		1	
53904 D	3	Compression Release Rod (TD 9)		1	
		Hex. Nut, 3/8" N.F.		2	
		Cotter Pin, 1/8 x 3/4"		1	
48906 D	4	Compression Release Rod Adjusting Block (TD 9)		1	
		Cotter Pin, 3/32 x 3/4"		1	
53907 D	5	Governor Control Lever Shaft		1	
8485 DAX	6	Governor Control Lever with Handle, 41597 D (TD 9)			
		(9645 D Will Work)			
		(With Lubricator Q 5015 Will Work for 8485 DX)		1	
9645 DA	6	Governor Control Lever (TD 9) (8485 DAX Will Work)			
		(With Lubricator Q 3615 Will Work for 8485 DX)		1	
Q 5015	7	Governor Control Lever Lubricator	TCB 3097 Up	1	
41597 D	8	Governor Control Lever Handle (TD 9)			
		(Used with Levers 8484 DAX and 8485 DAX)		1	
53903 D	9	Governor Control Rod (TD 9)		1	
		Hex. Nut, 1/2" N.F.		1	
		Cotter Pin, 1/8 x 3/4"		1	
15041 H	10	Governor Control Rod Adjusting Yoke Pin (TD 9)		1	
		Cotter Pin, 1/8 x 3/4"		1	
15033 H	11	Governor Control Rod Adjusting Yoke (TD 9)			
		(Will Work for 15668 D)		1	
15668 D	11	Governor Control Rod Adjusting Yoke (TD 9) (Order 15033 H)		1	
H 4213	12	Compression Release Lever Pivot Pin (TD 9)		1	
		Cotter Pin, 1/8 x 1"		1	
52404 D	13	Compression Release Lever Return Spring (TD 9)		1	
52405 D	14	Compression Release Lever Return Spring Link (TD 9)		1	
		Cotter Pin, 1/8 x 1/2"		1	
8434 DAX	15	Governor Control Lever with Handle, 41597 D (T 9)			
		(9644 D Will Work)			
		(With Lubricator Q 5015 Will Work for 8484 DX)		1	
9644 D	15	Governor Control Lever (T 9) (8484 DAX Will Work)			
		(With Lubricator Q 5015 Will Work for 8434 DX)		1	
41958 DA	16	Governor Control Rod Adjusting Block (T 9)		1	
		Cotter Pin, 3/32 x 5/8"		1	
53902 D	17	Governor Control Rod (T 9)		1	
		Hex. Nut, 3/8" N.F.		2	
		Cotter Pin, 1/8 x 5/8"		1	
54024 DC	18	Dash and Cowl, Complete (T 9) (Kerosene or Distillate-Gasoline)		1	
		Cap Screw, 1/2 x 1-1/2" N.C. Hex. Head		2	
		Welding Nut, 3/8" N.C.		4	
		Aluminum Rivet, 7/64 x 3/8" Flat Head		4	
		Lockwasher, 1/2"		2	
54025 DC	18	Dash and Cowl, Complete (TD 9)		1	
		Cap Screw, 1/2 x 1-1/8" N.C. Hex. Head		2	
		Welding Nut, 3/8" N.C.		4	
		Lockwasher, 1/2"		2	
		Aluminum Rivet, 7/64 x 3/8" Flat Head		4	
58318 DA	18	Dash and Cowl, Complete (T 9) (High Compression Gasoline)		1	
52272 D	19	Choke Control Rod and Button (T 9)		1	
		Cotter Pin, 1/16 x 1/2"		1	

CHASSIS

PART NUMBER	REF. NO.	DESCRIPTION	SERIAL NUMBER	NO. REQ'D
54860 D	19	Choke Control Rod and Button (TD 9) (Hood Side Door - Special)		1
		(Electric Starting - Special) (⊛ Also Used on Modified Units		
		Bucyrus-Erie No. 30)		1
		Cotter Pin, 1/16 x 1/2"		1
41934 DB	20	Oil Pressure Gauge		1
		Hex. Nut, No. 12 - 24 N.C.		2
60805 D	21	Oil Pressure Gauge Clamp		1
53031 D	22	Oil Pressure Gauge Clamp Stud Washer (Shakeproof No. 1112)		2
29898 D	23	Oil Pressure Gauge Coupling Nut (In Gauge)		1
57728 DX	24	Oil Pressure Gauge Tube with 2 Nuts, 29898 D		
		(Gauge to Engine)		1
29898 D	25	Oil Pressure Gauge Coupling Half Union Nut		1
29901 D	26	Oil Pressure Gauge Coupling Half Union (In Engine)		1
29901 DX	26A	Oil Pressure Gauge Coupling Half Union with Nut, 29898 D		
		(In Engine)		1
8732 D	27	Switch Knob		1
	27A	Lockwasher, No. 10 (Cadmium Plated)		1
56517 D	28	Switch Mounting Nut		1
56519 D	29	Switch Plunger Dust Seal		1
55440 D	30	Switch Mounting Nut Lockwasher (Shakeproof No. 1226)		
		(Cadmium Plated)		1
56507 D	31	Ignition Switch Spacer (T 9)		1
54207 D	32	Magneto Ignition Switch		1
		Slotted Screw, No. 8-32 x 1/4" Round Head (Cadmium Plated)		1
		Lockwasher, No. 8 (Cadmium Plated)		1
28500 H	33	Magneto Ignition Switch Cable Insulating Sleeve		
		(Order 45027 H) (T 9)		2
45027 H	33	Magneto Ignition Switch Cable Insulating Sleeve		
		(Will Work for 28500 H)(T 9)		2
28428 D	34	Magneto Ignition Switch Cable Clamp (T 9)		2
59116 D	35	Magneto Ignition Switch Cable with 2 Sleeves, 45027 H and		
		Terminals (T 9)		1
55471 D	36	Magneto Ignition Switch Cable Clip (T 9)		1
		Slotted Screw, No. 10 - 32 x 5/16" Fillister Head		
		(Cadmium Plated)		1
		Lockwasher, No. 10 (Cadmium Plated)		1
42911 DB	37	Heat Indicator (Tractor with Radiator Shutter)		1
		Hex. Nut, No. 12 - 24 N.C.		2
50417 D	38	Heat Indicator Clamp		1
53031 D	39	Heat Indicator Clamp Stud Washer (Shakeproof No. 1112)		2
51510 D	40	Heat Indicator Reducing Bushing		1
52270 D	41	Primer Control Rod and Button (TD 9)	TCB 501 to 2455	1
		Cotter Pin, 1/16 x 3/8"		1
45248 D		Dash Spacer (TD 9)	TCB 2071 Up	2
		Washer, 9/16" I.D. x 1-3/8" O.D. x No. 12 Ga.		x
55754 D		Dash Spacer (T 9)	TCB 2071 Up	2
		Washer, 9/16" I.D. x 1-3/8" O.D. x No. 12 Ga.		x
63782 D		Heat Indicator (Work Range 130° to 160°)		
		(Low Boiling Point Special)		1
64071 D		Low Boiling Point Thermostat and Heat Indicator Attachment		
		(Special) (Consisting of Thermostat and Heat Indicator 63782 D)		
		(See "Fan and Water Pump")		1
		⊛ - For Tabulation of Modifications see Introduction Page		

X As Required

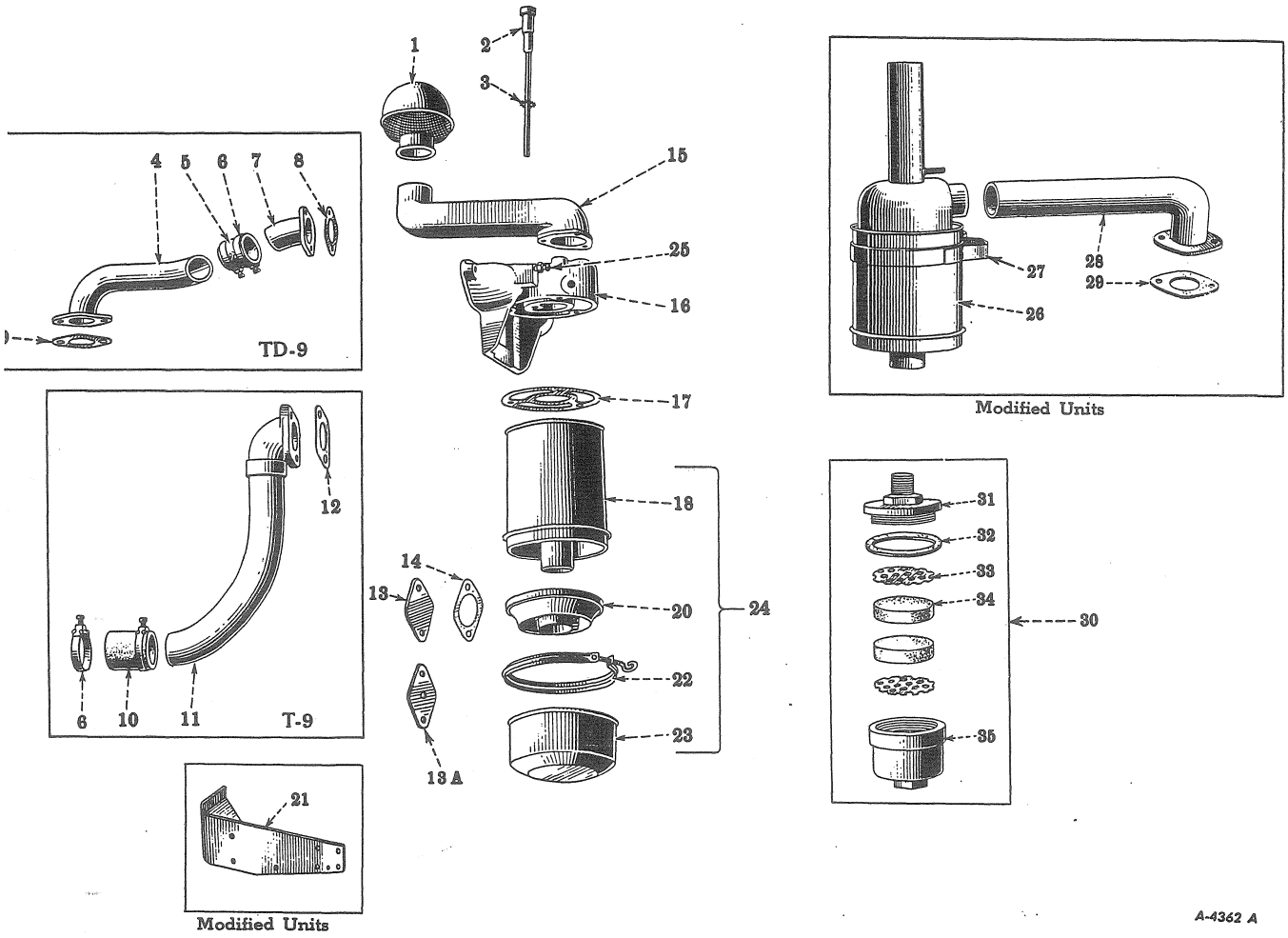

Reference numbers only are shown in illustration. Use I H C part numbers in ordering.
Unnumbered parts in the illustrations are the same as corresponding parts shown with numbers.

AIR CLEANER AND CONNECTIONS

56508 D	1		Air Intake Cap (Not Pre-Cleaner)	1	
55746 DAX	2		Engine Breather Tube Extension with Bolt	1	
47415 H	3		Engine Breather Tube Extension Anchor Bolt		
			Lockwasher (Shakeproof No. 1128-1)	1	
52251 DX	4		Air Cleaner Pipe with Flange (TD 9)	1	
			Hex Nut, 3/8" N.C.	2	
45822 D	5		Air Cleaner Pipe Hose, 2-1/4 x 2-1/4 x 7/32" Thick,		
			8 Ply (TD 9)	1	
45813 D	6		Air Cleaner Pipe Hose Clamp	2	
51942 DX	7		Air Cleaner Pipe Elbow with Flange	1	
			Cap Screw, 1/2 x 1-1/4" N.C. Hex. Head	2	
			Lockwasher, 1/2"	2	
51939 D	8		Air Cleaner Pipe Elbow Flange Gasket (TD 9)	1	
51939 D	9		Air Cleaner Pipe Flange Gasket (TD 9)	1	

CHASSIS

I H C PART NUMBER	REF. NO.	MFR'S. NUMBER	DESCRIPTION	SERIAL NUMBER	NO. REQ'D
51940 D	10		AIR CLEANER PIPE HOSE, 2-1/4 x 2-3/4 x 7/32" THICK,		
			8 PLY		1
52250 DX	11		AIR CLEANER PIPE WITH FLANGE (T 9)		1
			CAP SCREW, 1/2 x 1-1/4" N.C. HEX. HEAD		2
			LOCKWASHER, 1/2"		2
62466 D	11		AIR CLEANER PIPE ((*) USED ON MODIFIED UNITS ADAMS 75)		1
51939 D	12		AIR CLEANER PIPE FLANGE GASKET (T 9)		1
51941 D	13		AIR CLEANER TOP COVER (ON ENGINES WITH BOSCH INJECTION PUMP)		1
			CAP SCREW, 1/2 x 1" N.C. HEX. HEAD		2
			LOCKWASHER, 1/2"		2
64638 D	13A		AIR CLEANER TOP COVER (ON ENGINES WITH IHC INJECTION PUMP)		1
			CAP SCREW, 1/8 x 1" N.C. HEX HEAD		2
			LOCKWASHER, 1/2"		2
51939 D	14		AIR CLEANER TOP COVER GASKET		1
8722 DA	15		AIR PIPE (NOT PRE-CLEANER)		1
			CAP SCREW, 3/8 x 1" N.C. HEX. HEAD		2
			CAP SCREW, 3/8 x 3-3/4" N.C. HEX. HEAD		1
			LOCKWASHER, 3/8"		3
8482 D	16		CONTROL HOUSING AND AIR CLEANER TOP		1
			CAP SCREW, 1/2 x 1" N.C. HEX. HEAD		2
			CAP SCREW, 1/2 x 1-1/2" N.C. HEX. HEAD		2
			HEX. NUT, 1/2" N.C.		2
			LOCKWASHER, 1/2"		4
11917 DC	17		AIR CLEANER GASKET		1
56480 D	18	2P-3647	BODY, COMPLETE		1
67118 D	20	2P-4887	HOUSED SCREEN AND BAFFLE, COMPLETE		
			(WILL WORK FOR 54262 D, 54273 D AND 54276 D)		1
62440 D	21		AIR CLEANER SUPPORT		
			((*) USED ON MODIFIED UNITS ADAMS 70, 80 AND 86)		1
62465 D	21		AIR CLEANER SUPPORT ((*) USED ON MODIFIED UNITS ADAMS 75)		1
56482 D	22	P-2823	OIL CUP RETAINING CLAMP, COMPLETE		1
59860 D	22	P-3951	OIL CUP RETAINING CLAMP		
			((*) USED ON MODIFIED UNITS ADAMS 70, 75 AND 80)		1
56481 D	23	P-3655	OIL CUP, COMPLETE		1
55868 DX	24		AIR CLEANER, COMPLETE (DONALDSON 8")		1
			CAP SCREW, 1/2 x 3-3/8" N.C. HEX. HEAD		3
			LOCKWASHER, 1/2"		3
			(*) - FOR TABULATION OF MODIFICATION SEE INTRODUCTION PAGE		

CHASSIS

I. H. C. PART NUMBER	REF. NO.	MFR'S. NUMBER	DESCRIPTION	SERIAL NUMBER	NO. REQ'D
21526 D	25		GOVERNOR CONTROL LEVER STOP SCREW		
			(WILL WORK FOR 55748 D)	TCB 2750 UP	1
			HEX. NUT, 3/8" N.C.		1
55748 D	25		GOVERNOR CONTROL LEVER STOP SCREW (ORDER 21526 D)	TCB 501 TO 2749	1
			HEX. NUT, 3/8" N.C.		1
55789 D	26	2P-3665	BODY, COMPLETE (*USED ON MODIFIED UNITS ADAMS 70, 75, AND 80)		1
55693 DX	27		AIR CLEANER BRACKET WITH BAND		
			(*USED ON MODIFIED UNITS ADAMS 70, 75, 80 AND 86)		1
61001 DAMX	28		AIR CLEANER PIPE		
			(*USED ON MODIFIED UNITS ADAMS 70, 80 AND 86)		1
53955 D	29		AIR CLEANER PIPE GASKET		
			(*USED ON MODIFIED UNITS ADAMS 70, 80 AND 86)		1
55691 DX			AIR CLEANER, COMPLETE (DONALDSON 8")		
			(*USED ON MODIFIED UNITS ADAMS 70, 75, 80 AND 86)		1
54262 D		P-1613	HOUSED SCREENS (ORDER 67118 D)		1
54273 D		P-3520	HOUSED SCREEN AND BAFFLE, COMPLETE (ORDER 67118 D)		1
54276 D		P-1614	SCREEN CLAMP, COMPLETE (ORDER 67118 D)		1
			MACHINE BOLT, 1/4 x 1" N.C. FILLISTER		
			HEAD AND NUT		1

INJECTION PUMP AIR CLEANER

(For Engines Equipped with I.H.C. Fuel Injection Pump)

64643 D	30		INJECTION PUMP AIR CLEANER, COMPLETE		1
9454 D	31		INJECTION PUMP AIR CLEANER BODY CAP		1
64576 D	32		INJECTION PUMP AIR CLEANER BODY GASKET		1
64578 D	33		INJECTION PUMP AIR CLEANER FILTER ELEMENT RETAINER		2
64577 D	34		INJECTION PUMP AIR CLEANER FILTER ELEMENT		2
9453 D	35		INJECTION PUMP AIR CLEANER BODY		1

(*) - FOR TABULATION OF MODIFICATIONS SEE INTRODUCTION PAGE

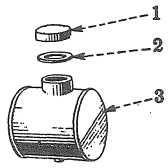

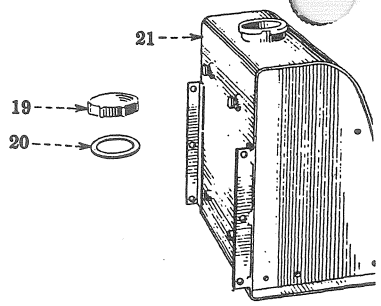

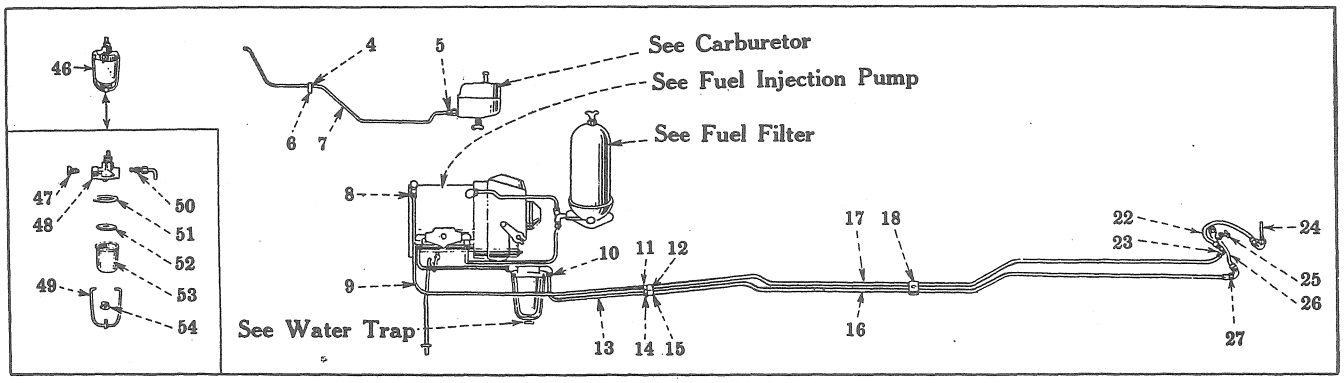

TD-9 ENGINE EQUIPPED WITH BOSCH FUEL INJECTION PUMP

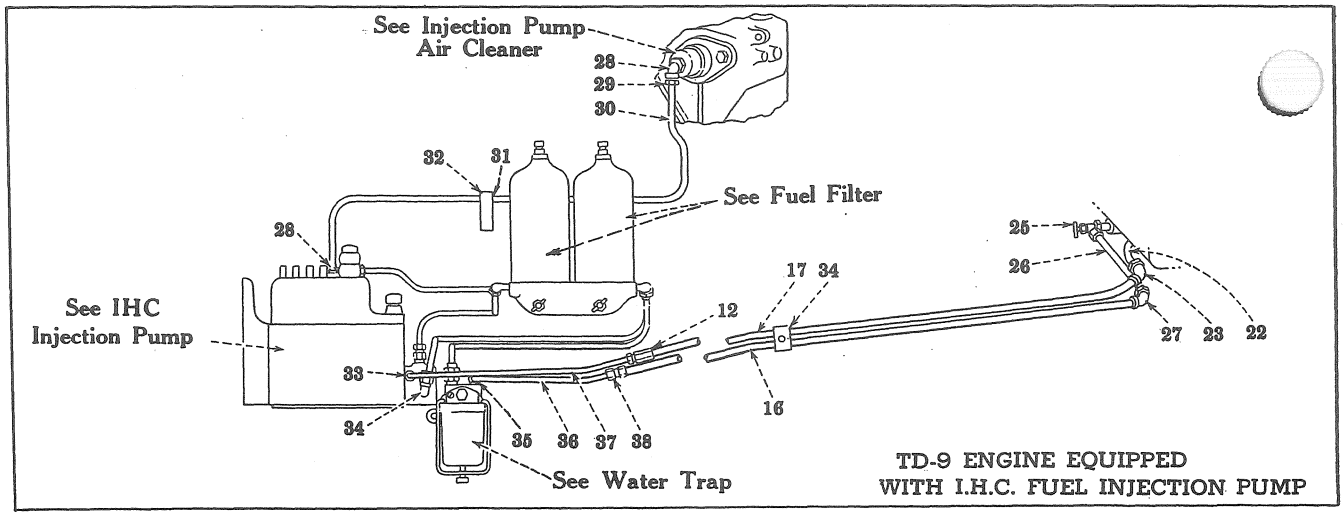

TD-9 ENGINE EQUIPPED WITH I.H.C. FUEL INJECTION PUMP

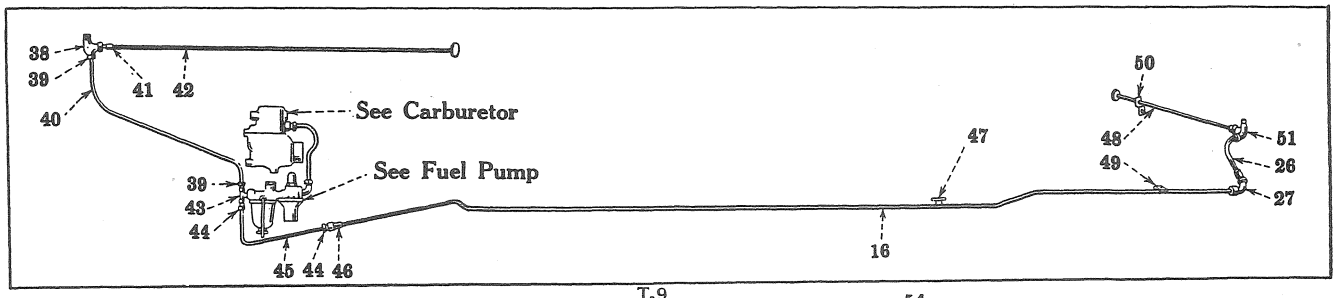

T-9

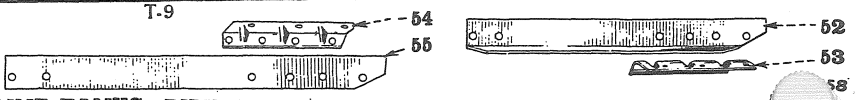

FUEL AND GASOLINE TANKS, PIPING AND GASOLINE STRAINER

Reference numbers only are shown in illustration. Use I H C part numbers in ordering.

PRINTED IN UNITED STATES OF AMERICA

FUEL AND GASOLINE TANKS, PIPING AND GASOLINE STRAINER

PART NUMBER	REF. NO.	DESCRIPTION	SERIAL NUMBER	NO. REQ'D
23995 DA	1	Gasoline Tank Filler Cap with Gasket, 23977 DA		1
23977 DA	2	Gasoline Tank Filler Cap Gasket		1
46308 DBX	3	Gasoline Tank, with Filler Cap, Complete (T 9 or TD 9)		
		(Not High Compression Gasoline)		1
		Cap Screw, 3/8 x 3/4" N.C. Hex Head		4
		Lockwasher, 3/8"		4
26242 D	4	Gasoline Tube Clip Felt (TD 9)		1
29899 D	5	Gasoline Tube Coupling Nut (In Carburetor) (TD 9)		1
57296 D	6	Gasoline Tube Clip (Diesel)		1
57295 DX	7	Gasoline Tube with Nut, 29899 D (Gasoline Tank to Carburetor)		
		(TD 9)		1
37165 D	8	Fuel Return Tube Coupling Nut (In Pump)(TD 9)	(See Note "A")	1
57729 DX	9	Fuel Return Tube with Nut, 37165 D (Pump to Return Pipe)		
		(TD 9)	(See Note "A")	1
37165 D	10	Fuel Tube Coupling Nut (On Water Trap)(TD 9)		1
37323 D	10	Fuel Pipe to Water Trap Elbow (TD 9)		1
37323 DX	10	Fuel Pipe to Water Trap Elbow with Nut, 37165 D (TD 9)		1
37165 D	11	Fuel Return Tube to Fuel Return Pipe Coupling Nut (TD 9)	(See Note "A")	1
42406 DX	12	Fuel Return Pipe Elbow with Coupling Nut (TD 9)		
		(Order 56597 DX)	TCB 501 to 504	1
56597 D	12	Fuel Return Pipe Coupling (Front End of Fuel Return Pipe)		
		(TD 9)	TCB 505 Up	1
56597 DX	12	Fuel Return Pipe Coupling with Nut, 37165 D		
		(Front End of Fuel Return Pipe) (TD 9)	TCB 505 UP	1
57543 DX	13	Fuel Tube with 2 Nuts, 37165 D (Fuel Pipe to Water Trap)(TD 9)	(See Note "A")	1
37165 D	14	Fuel Tube to Fuel Pipe Coupling Nut (TD 9)	(See Note "A")	1
56597 D	15	Fuel Pipe Coupling (Front End of Fuel Pipe) (TD 9) (See Note "A")	TCB 505 Up	1
56597 DX	15	Fuel Pipe Coupling with Nut, 37165 D (Front End of Fuel Pipe)		
		(Will Work for 42406 DX)(TD 9) (See Note "A")	TCB 505 Up	1
53988 D	16	Fuel Pipe		1
		Plow Bolt, 3/8 x 1" N.C. Square Head		1
		Hex. Nut, 3/8" N.C.		1
		Lockwasher, 3/8"		1
53989 D	17	Fuel Return Pipe (TD 9)		1
42385 D	18	Fuel Pipe Clamp, Outer(TD 9)		1
		Cap Screw, 3/8 x 1-3/4" N.C. Hex. Head		1
		Lockwasher, 3/8"		1
42387 D	19	Fuel Tank Filler Cap with Gasket, 42495 D		1
42495 D	20	Fuel Tank Filler Cap Gasket		1
53880 DAX	21	Fuel Tank, Complete with Filler Cap (Order 60188 DAX)	TCB 501 to 2254	1
		Cork, 5/16 x 7/16" Diameter x 5/8" Long		1
		Pipe Plug, 1/4" (T 9)		1
		Pipe Plug, 1/2"		1
60188 DAX	21	Fuel Tank, Complete with Filler Cap (Will Work for 53880 DAX)	TCB 2255 Up	1
		Cork, 5/16 x 7/16" Diameter x 5/8" Long		1
		Pipe Plug, 1/4" (T 9)		1
		Pipe Plug, 1/2"		1
		"A" on Tractors Equipped with Bosch Pump		
		"B" on Tractors Equipped with IHC Pump		

CHASSIS

PART NUMBER	REF. NO.	DESCRIPTION	SERIAL NUMBER	NO. REQ'D
28899 DB	22	Fuel Return Tube (TD 9)		1
48233 D	23	Fuel Return Tube Elbow (Rear End Fuel Return Pipe) (TD 9)		1
51849 DX	24	Fuel Return Stand Pipe with Elbow (TD 9)		1
53953 D	25	Fuel Shut-Off Valve (TD 9)		1
53954 D	26	Fuel Tube (Shut-Off Valve to Fuel Pipe)(Not High Seat)		1
61248 D	26	Fuel Tube (Shut-Off Valve to Fuel Pipe)(High Seat - Special)	TCB 2390 Up	1
48232 D	27	Fuel Tube Elbow (Rear End of Fuel Pipe)		1
37323 D	28	Injection Pump Air Cleaner Tube Elbow	(See Note "B")	2
29899 D	29	Gasoline Tank Shut-Off Valve Coupling Nut (T 9)		1
37165 D	29	Injection Pump Air Cleaner Tube Nut	(See Note "B")	2
65092 D	30	Injection Pump Air Cleaner Tube		
		(*Used on Modified Units Adams 80 and 86)	(See Note "B")	1
64641 DX	30	Injection Pump Air Cleaner Tube with 2 Nuts, 37165 D	(See Note "B")	1
16445 D	31	Injection Pump Air Cleaner Tube Clip Felt	(See Note "B")	1
23125 D	32	Injection Pump Air Cleaner Tube Clip		
		(*Used on Modified Units Adams 80 and 86)	(See Note "B")	1
29538 D	32	Injection Pump Air Cleaner Tube Clip	(See Note "B")	1
5631 TM	33	Fuel Return Tube Elbow (*Used on Modified Units Adams 80 and 86)	(See Note "B")	1
5635 TM	33	Fuel Return Tube Nut (*Used on Modified Units Adams 80 and 86)	(See Note "B")	1
38026 DM	33	Fuel Return Tube Connector	(See Note "B")	1
67922 D	34	Primary Pump Filter, Complete	(See Note "B")	1
22510 D	35	Fuel Tube Elbow	(See Note "B")	1
63127 DAX	36	Fuel Tube with Nuts and Nipples (Fuel Pipe to Water Trap)	(See Note "B")	1
63128 DX	37	Fuel Return Tube with 2 Nuts, 37165 D(Primary Pump to Return Pipe)	(See Note "B")	1
50500 DA	38	Gasoline Tank Shut-off Valve (T 9)		
		(Kerosene or Distillate Gasoline)		1
50500 DAX	38	Gasoline Tank Shut-off Valve with Nut, 29899 D (T 9)		
		(Kerosene or Distillate Gasoline)		1
65833 D	38	Fuel Pipe Coupling	(See Note "B")	1
29899 D	39	Gasoline Tube Coupling Nut (T 9)		1
61508 DX	40	Gasoline Tube with 2 Nuts, 29899 D (Gasoline Tank to Fuel Pump)		
		(T 9)		1
51850 D	41	Fuel Shut-Off Valve(T 9) (Kerosene or Distillate Gasoline)		1
51933 D	41	Gasoline Shut-off Valve Control Rod Coupling (T 9)		
		(Kerosene or Distillate Gasoline)		1
		Cotter Pin, 1/8 x 3/4"		1
52275 D	42	Gasoline Shut-off Valve Control Rod and Button (T 9)		
		(Kerosene or Distillate Gasoline)		1
56070 DX	43	Fuel Tank Support Bracket, R.H. with Gussets		
		(High Seat - Special)		1
		Cap Screw, 1/2 x 1" N.C. Hex. Head		3
		Lockwasher, 1/2"		3
57982 D	43	Fuel and Gasoline Tube 90° Tee (In Fuel Pump) (T 9)		1
57982 DX	43	Fuel and Gasoline Tube 90° Tee with Nut, 29899 D		
		(In Fuel Pump) (T 9)		1
29899 D	44	Fuel Tube Coupling Nut (T 9)		2
56069 DX	44	Fuel Tank Support Bracket, L.H. with Gussets		
		(High Seat - Special)		1
		Cap Screw, 1/2 x 1" N.C. Hex. Head		3
		Lockwasher, 1/2"		3
61509 DX	45	Fuel Tube with 2 Nuts, 29899 D (Fuel Pipe to Fuel Pump)		
		(T 9)		1
		NOTE - "B" On Tractors Equipped with IHC Injection Pumps		
		(*) - For Tabulation of Modifications see Introduction Page		

CHASSIS

PART NUMBER	REF. NO.	DESCRIPTION	SERIAL NUMBER	NO. REQ'D
57050 D	46	Fuel Pipe Coupling (Front End of Fuel Pipe) (T 9)		1
57050 DX	46	Fuel Pipe Coupling with Nut, 29899 D		
		(Front End of Fuel Pipe)		1
56151 D	47	Fuel Pipe Bolt Spacer (T 9)		2
51852 D	48	Fuel Shut-off Valve Control Rod and Button, Complete		
		(T 9) (Kerosene or Distillate Gasoline)	TCB 501 to 2720	1
		Cotter Pin, 1/8 x 1"		1
53725 D	48	Fuel Shut-off Valve Control Rod and Button (T 9)		
		(Kerosene or Distillate Gasoline)	TCB 2721 Up	1
		Cotter Pin, 1/8 x 1"		1
50149 D	49	Fuel Pipe Clamp, Outer (T 9)		1
		Cap Screw, 3/8 x 1-1/2" N.F. Hex. Head		1
		Lockwasher, 3/8"		1
56396 D	50	Fuel Shut-off Valve Control Rod Bracket (T 9)		
		(Kerosene or Distillate Gasoline)		1
		Cap Screw, 3/8 x 3/4" N.C. Hex. Head		1
		Hex. Nut, 3/8" N.C.		1
		Lockwasher, 3/8"		1
53953 D	51	Fuel Shut-off Valve (T 9) (High Compression Gasoline-Special)		1
53882 D	52	Fuel Tank Support, R.H.		1
		Cap Screw, 1/2 x 1" N.C. Hex. Head		3
		Cap Screw, 1/2 x 7/8" N.C. Hex. Head		1
		Lockwasher, 1/2"		4
53884 D	53	Fuel Tank Support Bracket, R.H. (Not High Seat)		1
		Cap Screw, 1/2 x 1" N.C. Hex. Head		3
		Lockwasher, 1/2"		3
53883 D	54	Fuel Tank Support Bracket, L.H. (Not High Seat)		1
		Cap Screw, 1/2 x 1" N.C. Hex. Head		3
		Lockwasher, 1/2"		3
53881 D	55	Fuel Tank Support, L.H.		1
		Cap Screw, 1/2 x 1" N.C. Hex. Head		3
		Cap Screw, 1/2 x 7/8" N.C. Hex. Head		1
		Lockwasher, 1/2"		4

GASOLINE STRAINER (Imperial Brass Mfg. Co.) (Diesel)

I H C PART NUMBER	REF. NO.	MFR'S. NUMBER	DESCRIPTION	SERIAL NUMBER	NO. REQ'D
51066 DB	46	43121	Gasoline Strainer (64049 D Will Work)		1
51066 DBX	46		Gasoline Strainer with Coupling Nut, 29899 D		1
64049 D	46	43636	Gasoline Strainer (51066 DB Will Work)		1
64049 DX	46		Gasoline Strainer with Nut, 29899 D		1
29899 D	47	81-L	Coupling Nut		1
54486 D	48	43121-1	Strainer Body with Tube (64967 D Will Work)		1
64967 D	48	43636-1	Strainer Body (Grey Iron) (54486 D Will Work)		1
17564 D	49	26984	Bail, Assembly		1
52855 D	50	43078-3	Stem, Assembly		1
13193 D	51	25857	Strainer Gasket		1
13194 D	52	25854	Strainer Screen		1
13191 D	53		Strainer Bowl (Brass) (Special)		1
51344 V	53	25858	Strainer Bowl (Glass)		1
17565 DA	54	27208	Nut and Cap, Assembly		1

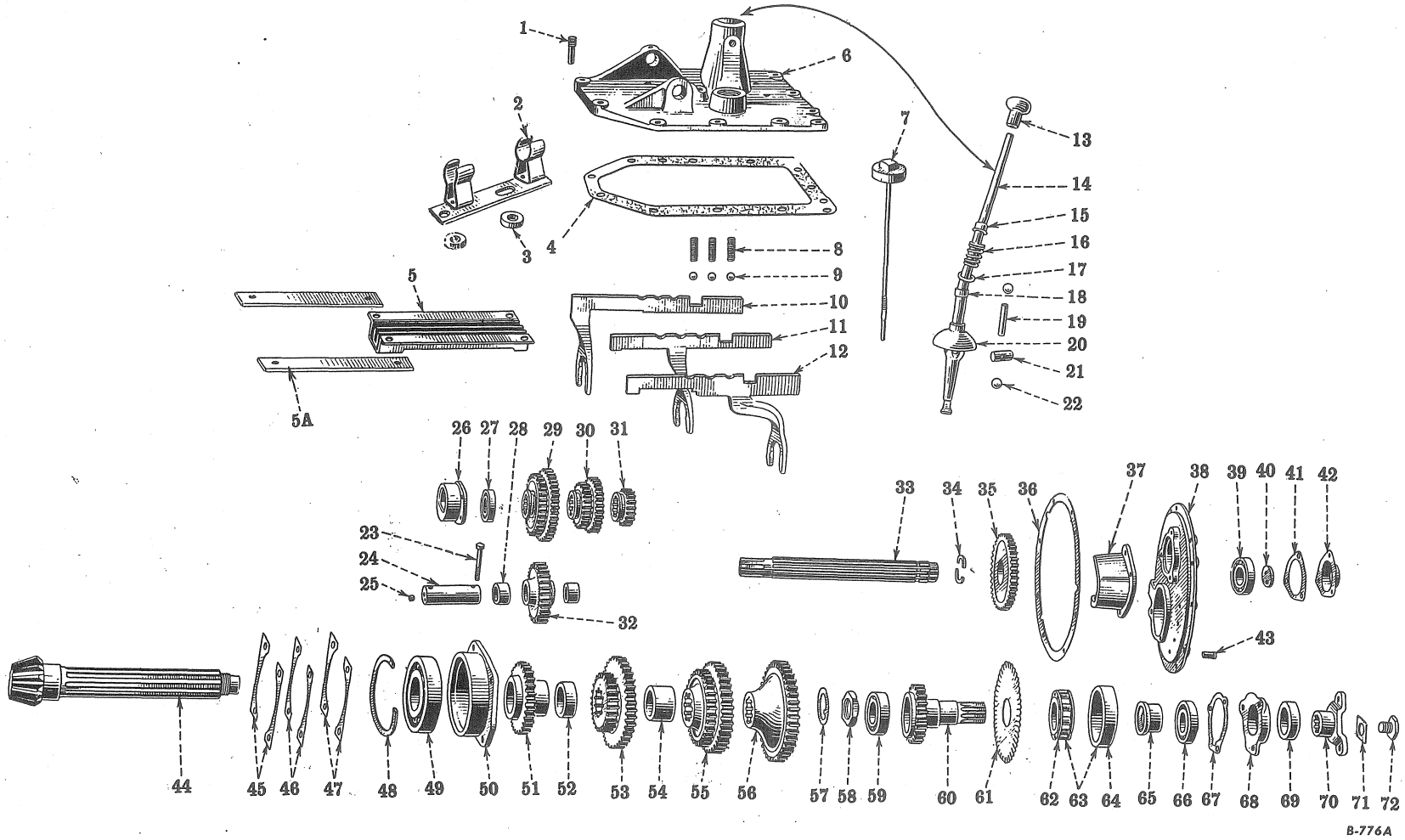

TRANSMISSION GEAR SHIFTER MECHANISM AND TRANSMISSION

Reference numbers only are shown in illustration. Use I H C part numbers in ordering.
Unnumbered parts in the illustration are the same as corresponding parts shown with numbers.

CHASSIS

TRANSMISSION GEAR SHIFTER MECHANISM

PART NUMBER	REF. NO.	DESCRIPTION	SERIAL NUMBER	NO. REQ'D
18585 DA	1	Gear Shifter Housing to Main Frame Dowel		2
57925 D	2	Starting Crank Mounting Bracket with Clips	TCB 1901 Up	1
		Cap Screw, 7/16 x 1-3/4" N.C. Hex. Head		2
		Lockwasher, 7/16"		2
		Rivet, 3/16 x 3/8" Round Head		4
52823 D	3	Starting Crank Mounting Bracket Spacer	TCB 1901 Up	2
53486 D	4	Gear Shifter Housing Gasket		1
53474 D	5	Gear Shifter Rail Guide 2nd Support (Order 69467 D)	TCB 501 to 7024	1
		Cap Screw, 3/8 x 3/4" N.C. Hex. Head		4
		Lockwasher, 3/8" (Order 62779 DX)		4
63320 D	5	Gear Shifter Rail Guide 2nd Support (Order 69467 D)	TCB 7025 to 14107	1
69466 D	5	Gear Shifter Rail Guide	TCB 14108 Up	1
62779 D	5A	Gear Shifter Rail Guide Support Bolt Lock	TCB 3527 Up	2
62779 DX	5A	Gear Shifter Rail Guide Support Bolt Lock (Set of 2)		
		(Will Work for 3/8" Lockwashers)	TCB 501 to 3526	1
8438 DAX	6	Gear Shifter Housing with 2 Plugs, 13115 D (Not Odometer)		1
		Cap Screw, 7/16 x 1-3/8" N.C. Hex. Head		4
		Cap Screw, 7/16 x 1-3/4" N.C. Hex Head		5
		Lockwasher, 7/16"		9
8947 DX	6	Gear Shifter Housing with 2 Plugs, 13115 D (Odometer - Special)		1
	7	See Transmission		
47823 D	8	Gear Shifter Rail Poppet Ball Spring (Order 64163 D)		3
64163 D	8	Gear Shifter Rail Poppet Ball Spring (Will Work for 47823 D)		3
4596 D	9	Gear Shifter Rail Poppet Ball, 1/2" (13722 D Will Work)		3
13722 D	9	Gear Shifter Rail Poppet Ball, 1/2" (4596 D Will Work)		3
53479 DA	10	Fourth and Fifth Gear Shifter Fork (Order 53480 DA)		1
53480 DA	10	4th and 5th Gear Shift Rail and Fork		1
53478 DA	11	2nd and 3rd Gear Shifter Fork (Order 53481 DA)		1
53481 DA	11	2nd and 3rd Gear Shift Rail and Fork		1
53477 DA	12	Low and Reverse Gear Shifter Fork (Order 69467 D)	TCB 501 to 7024)	1
53482 DA	12	Low and Reverse Gear Shifter Rail and Fork (Order 69467 D)	TCB 501 to 7024)	1
63316 D	12	Low and Reverse Gear Shifter Fork (Order 69467 D)	TCB 7025 to 14107	1
63317 DA	12	Low and Reverse Gear Shifter Rail and Fork (Order 69467 D)	TCB 7025 to 14107	1
69470 D	12	Low and Reverse Gear Shifter Fork (Order 69464 D)	TCB 14108 Up	1
69464 D	12	Low and Reverse Gear Shifter Rail and Fork	TCB 14108 Up	1
9637 D	13	Gear Shift Lever Ball		
		(Will Work for 53717 DA by Threading Lever 47585 DAX,		
		1/2-13 N.C. x 3/4" Long)		1
53717 DA	13	Gear Shift Lever Ball (Used with Lever 47585 DAX) (Order 9637 D)		1
47585 DAX	14	Gear Shift Lever with 2 Plugs, 13115 D (67349 DX Will Work)		1
67349 DX	14	Gear Shift Lever with Ball, 9637 D and 2 Plugs, 13115 D		
		(47585 DAX Will Work)		1
11373 D	15	Gear Shifter Swivel Housing Shield Spring Stop, Upper		1
		Iron Rivet, 3/16 x 1-1/4" Round Head		1
29547 D	16	Gear Shifter Swivel Housing Shield Spring		1
17700 D	17	Gear Shifter Swivel Housing Shield Spring Stop, Lower		1
20887 DA	18	Gear Shifter Swivel Housing Shield Bushing		1
40466 DX	19	Gear Shift Lever Swivel Shaft, Small with 2 Plugs, 13115 D		1
42496 DX	20	Gear Shifter Swivel Housing Shield with Bushing, 20887 DA		
		and Rivet, 3/16 x 1-1/4"		1
40465 DX	21	Gear Shift Lever Swivel Shaft, Large with 2 Plugs, 13115 D		1
13115 D	22	Gear Shift Lever Swivel Shaft Expansion Plug, 5/8"		2

CHASSIS

PART NUMBER	REF. NO.	DESCRIPTION	SERIAL NUMBER	NO. REQ'D	PRICE
		TRANSMISSION—BALL BEARING (5 SPEEDS FORWARD, 1 REVERSE)			
53683 DA	7	Transmission Oil Level Rod with Plug and Shield		1	
4457 D	23	Transmission Reverse Idler Gear Shaft Bolt		1	
		Hex. Nut, 3/8" N.F. (Castellated)		1	
		Cotter Pin, 3/32 x 3/4"		1	
46905 DX	24	Transmission Reverse Idler Gear Shaft with Plug, 45361 D		1	
45361 D	25	Transmission Reverse Idler Gear Shaft Plug		1	
6477 D	26	Transmission Spline Shaft Bearing Cage, Rear		1	
		Cap Screw, 3/8 x 7/8" N.C. Hex. Head		2	
		Lockwasher, 3/8"		2	
17767 D	27	Transmission Spline Shaft Bearing, Rear (N.D. 3208)			
		(ST 215 Will Work)		1	
ST 215	27	Transmission Spline Shaft Bearing, Rear (IHC)			
		(Will Work for 17767 D)		1	
46904 DR	28	Transmission Reverse Idler Gear Bushing		2	
52218 D	29	Transmission 4th and 5th Speed Sliding Gear (34 and 38 Teeth)	TCB 501 to 614	1	
56188 D	29	Transmission 4th and 5th Speed Sliding Gear (33 and 38 Teeth)	TCB 615 Up	1	
52217 D	30	Transmission 2nd and 3rd Speed Sliding Gear (24 and 30 Teeth)			
		(63257 D Will Work)	TCB 501 to 4333	1	
63256 D	30	Transmission 2nd and 3rd Speed Sliding Gear (24 and 29 Teeth)	TCB 4334 Up	1	
52216 D	31	Transmission 1st and Reverse Speed Sliding Gear (19 Teeth)		1	
52237 DX	32	Transmission Reverse Idler Gear (33 Teeth) (with 2 Bushings)		1	
52220 D	33	Transmission Spline Shaft		1	
53632 DX	34	Transmission Driven Gear Split Collar (2 Halves)		1	
52211 D	35	Transmission Driven Gear (39 Teeth)		1	
46918 D	36	Transmission End Cover Gasket		1	
8779 D	37	Transmission End Cover Oil Pocket	TCB 2920 Up	1	
		Cap Screw, 5/16 x 7/8" N.C. Hex. Head		3	
		Lockwasher, 5/16"		3	
6480 DC	38	Transmission End Cover	TCB 2810 Up	1	
		Cap Screw, 7/16 x 1-1/4" N.C. Hex. Head		4	
		Hex. Nut, 7/16" N.F.		4	
		Lockwasher, 7/16"		8	
6480 DCX	38	Transmission End Cover, 6480 DC with Oil Pocket, 8779 D,			
		Oil Slinger, 53633 DA and Bearing, ST 220 (Will Work for			
		6480 D, DA and DB)	TCB 501 to 2809	1	
17767 D	39	Transmission Spline Shaft Bearing, Front (N.D. 3208)			
		(ST 215 Will Work)		1	
ST 215	39	Transmission Spline Shaft Bearing, Front (IHC)			
		(Will Work for 17767 D)		1	
45357 D	40	Transmission Spline Shaft Front Bearing Retainer Washer		1	
		Cap Screw, 7/16 x 1" N.F. Hex. Head		2	
		Lockwasher, 7/16"		2	
46913 D	41	Transmission Spline Shaft Front Bearing Retainer Gasket		1	
46912 D	42	Transmission Spline Shaft Bearing Retainer, Front		1	
		Cap Screw, 3/8 x 3/4" N.C. Hex. Head		3	
		Lockwasher, 3/8"		3	

CHASSIS

PART NUMBER	REF. NO.	DESCRIPTION	SERIAL NUMBER	NO. REQ'D
45132 D	43	Transmission End Cover Dowel Pin		1
52221 D	44	Bevel Pinion and Shaft (12 Teeth)(Order 60405 D)	TCB 501 to 2250	1
58358 D	44	Bevel Pinion and Shaft (12 Teeth)(Order 60405 D)	TCB 2257 Up	1
60405 D	44	Bevel Pinion and Shaft with Drive Bevel Gear		
		(Will Work for 52221 D, 58358 D, 53552 D and 58357 D)		1
53635 D	45	Bevel Pinion and Shaft Rear Bearing Cage Shim (Heavy)		2
53636 D	46	Bevel Pinion and Shaft Rear Bearing Cage Shim (Medium)		2
53637 D	47	Bevel Pinion and Shaft Rear Bearing Cage Shim (Light)		X
53631 D	48	Bevel Pinion and Shaft Rear Bearing Snap Ring		1
21560 D	49	Bevel Pinion and Shaft Bearing, Rear (N.D. 1313)		1
8465 D	50	Bevel Pinion and Shaft Bearing Cage, Rear		1
		Cap Screw, 1/2 x 1-1/2" N.C. Hex. Head		4
		Lockwasher, 1/2"		4
52214 D	51	Transmission, 4th Speed Gear (31 Teeth)	TCB 501 to 614	1
56187 D	51	Transmission 4th Speed Gear (32 Teeth)	TCB 615 Up	1
46857 D	52	Bevel Pinion Shaft Spacer, Short		1
52213 D	53	Transmission, 2nd and 5th Speed Gear (27 and 41 Teeth)		1
46859 D	54	Bevel Pinion Shaft Spacer, Long		1
52212 D	55	Transmission, 3rd and Reverse Speed Gear (35 and 41 Teeth)		
		(63257 D Will Work)	TCB 501 to 4333	1
63255 D	55	Transmission 3rd and Reverse Speed Gear (36 and 41 Teeth)	TCB 4334 Up	1
52215 D	56	Transmission 1st Speed Gear (46 Teeth)		1
46888 D	57	Bevel Pinion Shaft Lock Nut Lockwasher		1
46887 D	58	Bevel Pinion Shaft Lock Nut		1
ST 200	59	Bevel Pinion Shaft Bearing, Front (IHC)		
		(Will Work for 10691 V)		1
10691 V	59	Bevel Pinion Shaft Bearing, Front (N.D. 1307)		
		(ST 200 Will Work)		1
52219 DA	60	Transmission Driving Shaft and Gear (26 Teeth)(Order 63690 D)	TCB 501 to 2809	1
52219 DB	60	Transmission Driving Shaft and Gear (26 Teeth)	TCB 2810 Up	1
63690 D	60	Transmission Driving Shaft and Gear, 52219 DB, with		
		Bearing ST 220 and Oil Slinger 53633 DA (Will Work for		
		52219 D and DA)	TCB 501 to 2809	1
53633 DA	61	Transmission Oil Slinger		1
53638 D	62	Transmission Drive Shaft Rear Bearing Inner Race and Roller	TCB 501 to 2809	1

X - As Required

CHASSIS

PART NUMBER	REF. NO.	DESCRIPTION	SERIAL NUMBER	NO. REQ'D
53640 D	63	Transmission Driving Shaft Bearing, Rear (Hyatt BU-1310-Z)		
		(Order 63692 D)	TCB 501 to 2809	1
63692 D	63	Transmission Driving Shaft Bearing, ST 220 with Oil Slinger,		
		53633 DA (Will Work for 53640 D)	TCB 501 to 2809	1
ST 220	63	Transmission Driving Shaft Bearing, Rear (IHC)		
		(Will Work for 10733 V)	TCB 2810 Up	1
10733 V	63	Transmission Driving Shaft Bearing, Rear (N.D. 1310)		
		(ST 220 Will Work)	TCB 2810 Up	1
53639 D	64	Transmission Drive Shaft Rear Bearing Outer Race	TCB 501 to 2809	1
6478 D	65	Transmission Driving Shaft Bearing Spacer		1
17767 D	66	Transmission Driving Shaft Bearing, Front (N.D. 3208)		
		(ST 215 Will Work)		1
ST 215	66	Transmission Driving Shaft Bearing, Front (IHC)		
		(Will Work for 17767 D)		1
46916 D	67	Transmission Driving Shaft Bearing Retainer Gasket		1
6479 DBX	68	Transmission Drive Shaft Front Bearing Retainer with Oil Seal,		
		53634 D		1
53634 D	69	Transmission Driving Shaft Oil Seal		1
52208 D	70	Transmission Drive Coupling		1
45435 D	71	Transmission Drive Coupling Retaining Screw Lock		
		(Order One Each 57792 DA and 57793 D)	TCB 501 to 1702	1
57792 DA	71	Transmission Drive Coupling Retaining Screw Lock		
		(With Screw 57793 D)(Will Work for 43969 D and 45435 D)	TCB 1703 Up	1
43969 D	72	Transmission Drive Coupling Retaining Screw		
		(Order One Each 57792 DA and 57793 D)	TCB 501 to 1702	1
57793 D	72	Transmission Drive Coupling Retaining Screw		
		(With Screw Lock, 57792 DA Will Work for 43969 D and 45435 D)	TCB 1703 Up	1
53716 D		Transmission Oil Reservior	TCB 501 to 516	1
		Hex. Nut, 7/16" N.C.		2
		Lockwasher, 7/16"		2
63257 D		Transmission 3rd and Reverse Gear, 63255 D and		
		2nd and 3rd Sliding Gear, 63256 D (Will Work for 52212 D		
		and 52217 D)	TCB 501 to 4333	1
63322 DA		Low and Reverse Gear Shifter Rail and Fork with Rail Guide		
		(Order 69467 D)	TCB 7025 to 14107	1
69467 D		Low and Reverse Gear Shifter Rail and Fork with Rail Guide		
		(Will Work for 53474 D, 53477 D, 53482 D, 63316 D, 63317 DA,		
		63320 D, 63322 DA)	TCB 7025 to 14107	1

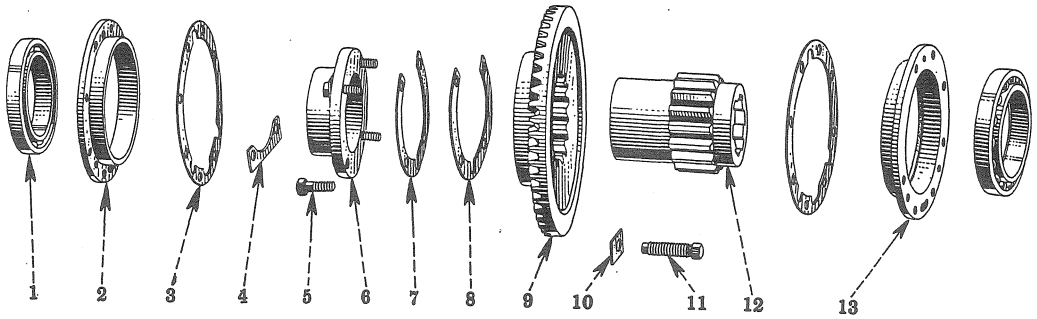

Reference numbers only are shown in illustration. Use I H C part numbers in ordering.
Unnumbered parts in the illustrations are the same as corresponding parts shown with numbers.

FINAL DRIVE—DRIVE BEVEL GEAR

53548 D	1	Drive Bevel Gear Bearing	2	
8455 D	2	Drive Bevel Gear Bearing Cage, L.H.	1	
51661 D	3	Drive Bevel Gear Bearing Cage Gasket	2	
53551 DA	4	Drive Bevel Gear Dowel Bolt Lock	2	
53544 D	5	Drive Bevel Gear Dowel Bolt	4	
53553 D	6	Drive Bevel Gear Spacer	1	
53549 D	7	Drive Bevel Gear Shim (Heavy)	4	
53550 D	8	Drive Bevel Gear Shim (Light)	X	
53552 D	9	Drive Bevel Gear (52 Teeth)(Order 60405 D -		
		See Transmission) TCB 501 to 2256	1	
58357 D	9	Drive Bevel Gear (52 Teeth)		
		(Order 60405 D - See Transmission) TCB 2257 Up	1	
56613 D	10	Drive Bevel Gear Deflection Set Screw Lock	1	
46849 D	11	Drive Bevel Gear Deflection Set Screw	1	
		Hex. Jam Nut, 3/4" N.C.	1	
8457 D	12	Drive Bevel Gear Hub	1	
8456 D	13	Drive Bevel Gear Bearing Cage, R.H.	1	

X - As Required

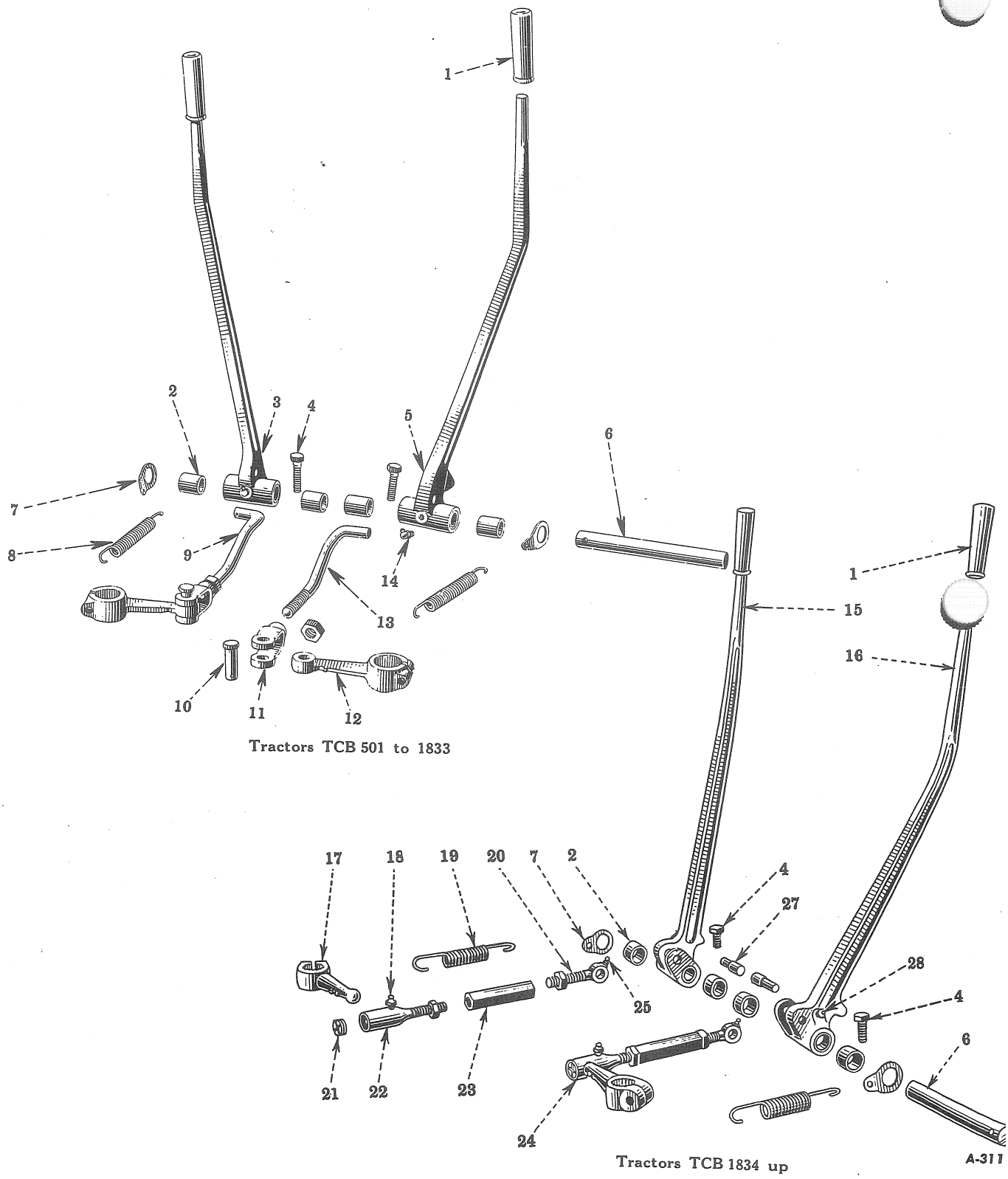

FINAL DRIVE—STEERING CLUTCH CONTROLS

Reference numbers only are shown in illustration. Use I H C part numbers in ordering.

Unnumbered parts in the illustrations are the same as corresponding parts shown with numbers.

FINAL DRIVE—STEERING CLUTCH CONTROL

PART NUMBER	REF. NO.	DESCRIPTION	SERIAL NUMBER	NO. REQ'D
41597 D	1	Steering Clutch Hand Lever Handle		
		(Not Used with Levers, 9639 DAX or 9640 DAX)		2
42175 D	2	Steering Clutch Hand Lever Bushing		4
8182 DX	3	Steering Clutch Hand Lever, L.H., with Handle,		
		41597 D and 2 Bushings, 42175 D	TCB 501 to 1833	1
	4	Screw, 1/2" x 1-1/4" N.C. Hex Head		
		(Will Work for 55377 D)	TCB 903 Up	1
		Hex Jam Nut, 1/2" N.C.		1
55377 D	4	Steering Clutch Hand Lever Adjusting Screw		
		(Order Standard Screw 1/2 x 1-1/4" N.C. Hex. Head)	TCB 501 to 902	2
		Hex Jam Nut, 1/2" N.C.		2
8183 DX	5	Steering Clutch Hand Lever, R.H., with Handle,		
		41597 D and 2 Bushings, 42175 D	TCB 501 to 1833	1
	4	Screw, 1/2 x 1-1/4" N.C. Hex Head		
		(Will Work for 55377 D)	TCB 903 Up	1
		Hex Jam Nut, 1/2" N.C.		1
53600 D	6	Steering Clutch Hand Lever Shaft		1
		Cap Screw, 5/16 x 2" N.C. Hex Head		1
		Lockwasher, 5/16"		1
53595 D	7	Steering Clutch Release Lever Return Spring Anchor		2
53596 D	8	Steering Clutch Release Lever Return Spring	TCB 501 to 1833	2
53605 D	9	Steering Clutch Operating Rod, L.H.	TCB 501 to 1833	1
		Hex Nut, 5/8" N.F.		1
		Cotter Pin, 5/32 x 1"		1
18653 D	10	Steering Clutch Release Lever Pin	TCB 501 to 1833	2
		Cotter Pin, 1/8 x 1"		2
47621 D	11	Steering Clutch Operating Rod Yoke	TCB 501 to 1833	2
8458 DA	12	Steering Clutch Release Lever	TCB 501 to 1833	2
		Cap Screw, 3/8 x 2-1/4" N.F. Hex Head		2
		Hex Nut, 3/8" N.F.		2
		Lockwasher, 3/8"		2
53606 D	13	Steering Clutch Operating Rod, R.H.	TCB 501 to 1833	1
		Hex Nut, 5/8" N.F.		1
		Cotter Pin, 5/32 x 1"		1
Q 3626	14	Steering Clutch Hand Lever Lubricator	TCB 501 to 1833	2
8944 DX	15	Steering Clutch Hand Lever, L.H., Complete (9639 DAX Will Work)	TCB 1834 Up	1
	4	Screw, 1/2 x 1-1/4" N.C. Hex Head		
		(Will Work for 55377 D)		1
		Hex Jam Nut, 1/2" N.C.		1
9639 DAX	15	Steering Clutch Hand Lever, L.H., Complete (8944 DX Will Work)		1
	4	Screw, 1/2 x 1-1/4" N.C. Hex Head		1
		Hex Jam Nut, 1/2" N.C.		1
8945 DX	16	Steering Clutch Hand Lever, R.H., Complete (9640 DAX Will Work)	TCB 1834 Up	1
	4	Screw, 1/2 x 1-1/4" N.C. Hex Head		
		(Will Work for 55377 D)		1
		Hex Jam Nut, 1/2" N.C.		1

CHASSIS

PART NUMBER	REF. NO.	DESCRIPTION	SERIAL NUMBER	NO. REQ'D
9640 DAX	16	Steering Clutch Hand R.H., Complete (8945 DX Will Work)		1
	4	Screw, 1/2 x 1-1/4" N.C. Hex Head		1
		Hex Jam Nut, 1/2" N.C.		1
59317 D	17	Steering Clutch Release Lever	TCB 1834 Up	2
		Cap Screw, 1/2 x 2-1/4" N.F. Hex Head		2
		Hex Nut, 1/2" N.F.		2
		Lockwasher, 1/2"		2
14186 DA	18	Steering Clutch Operating Turnbuckle Socket Lubricator		
		(Q 3615 Will Work)	TCB 1834 Up	2
Q 3615	18	Steering Clutch Hand Lever Lubricator (14186 DA Will Work)	TCB 1834 Up	2
59315 D	19	Steering Clutch Release Lever Return Spring	TCB 1834 Up	2
59309 DAX	20	Steering Clutch Operating Turnbuckle Eye with Lubricator,		
		59318 D or 59319 D	TCB 1834 Up	2
		Hex Jam Nut, 5/8" N.F., L.H. Thread		2
59314 D	21	Steering Clutch Operating Turnbuckle Socket Plug	TCB 1834 Up	2
		Cotter Pin, 1/8 x 1-1/2"		2
59312 D	22	Steering Clutch Operating Turnbuckle Socket, L.H.	TCB 1834 Up	1
		Hex Jam Nut, 5/8" N.F.	TCB 1834 Up	1
59311 D	23	Steering Clutch Operating Turnbuckle	TCB 1834 Up	2
59313 D	24	Steering Clutch Operating Turnbuckle Socket, R.H.	TCB 1834 Up	1
		Hex Jam Nut, 5/8" N.F.		1
59318 D	25	Steering Clutch Operating Turnbuckle Eye Lubricator		
		(59319 D Will Work)	TCB 1834 to 13988	2
59319 D	25	Steering Clutch Operating Turnbuckle Eye Lubricator		
		(59318 D Will Work)	TCB 1834 to 13988	2
69212 D	25	Steering Clutch Operating Turnbuckle Eye Lubricator	TCB 13989 Up	2
59310 D	27	Steering Clutch Operating Turnbuckle Eye Pin	TCB 1834 Up	2
14186 DA	28	Steering Clutch Hand Lever Lubricator (Q 3615 Will Work)	TCB 1834 Up	2
Q 3615	28	Steering Clutch Operating Turnbuckle Socket Lubricator		
		(14186 DA Will Work)	TCB 1834 Up	2
59320 D		Steering Clutch Control Field Change Improvement Package	TCB 501 to 1833	1

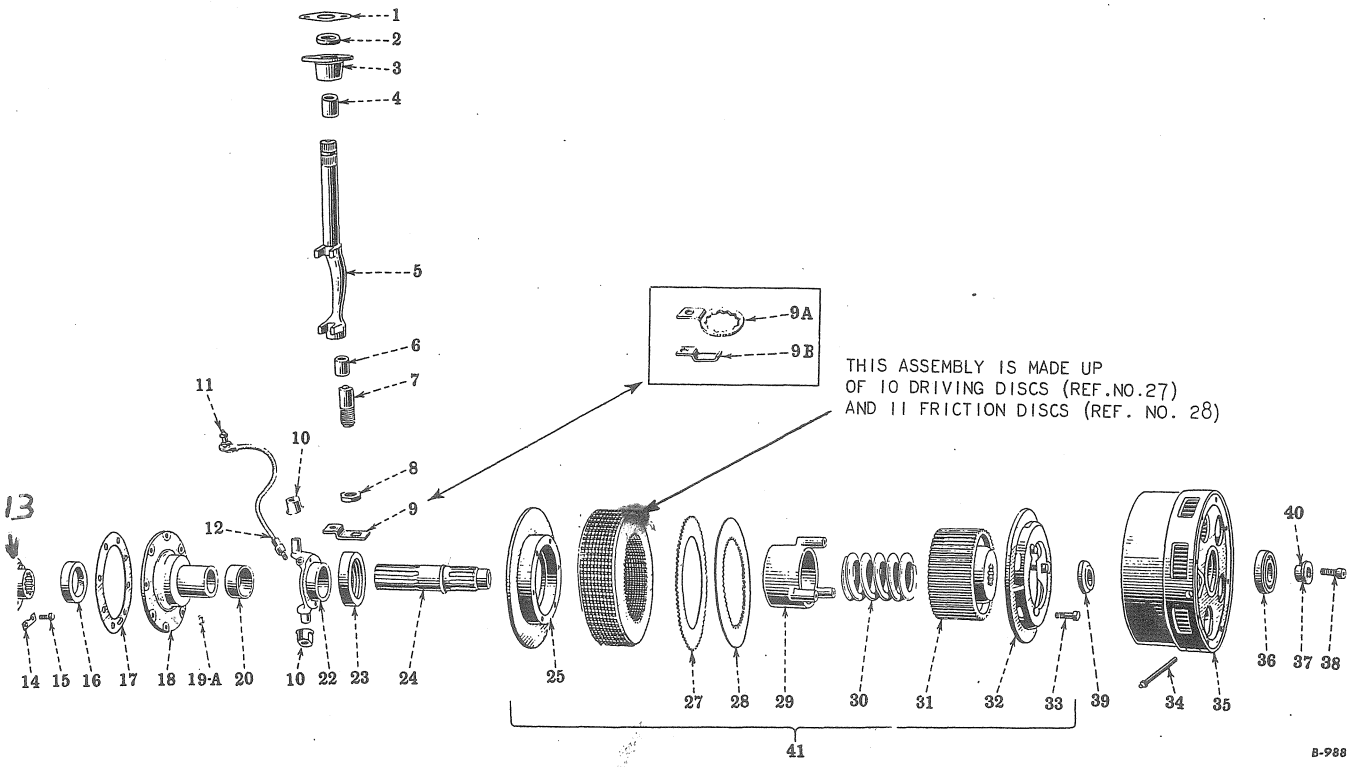

Reference numbers only are shown in illustration. Use I H C part numbers in ordering.
Unnumbered parts in the illustrations are the same as corresponding parts shown with numbers.

FINAL DRIVE—STEERING CLUTCH RELEASE SHAFT AND MECHANISM

46040 D	1	Steering Clutch Release Shaft Bearing Felt Retainer		2	
		Cap Screw, 7/16 x [illegible]/4" N.C. Hex. Head		4	
		Lockwasher, 7/16"		4	
46038 D	2	Steering Clutch Release Shaft Bearing Felt		2	
6376 DAX	3	Steering Clutch Release Shaft Bearing with 2 Bushings,			
		53597 D		2	
53597 D	4	Steering Clutch Release Shaft Bushing		2	
54103 DX	5	Steering Clutch Release Fork with Shaft and Bushing,			
		53598 D (Order 55959 DBX)	TCB 501 to 1060	2	
		Hex. Nut, 3/4" N.F.		2	
		Lockwasher, 3/4"		2	
55959 D	5	Steering Clutch Release Fork with Shaft and Bushing,			
		55955 D (Order 55959 DBX)	TCB 1061 to 1570	2	
		Hex. Nut, 3/4" N.F.		2	
		Lockwasher, 3/4"		2	
55959 DA	5	Steering Clutch Release Fork with Shaft and Bushing,			
		55955 D (Order 55959 DBX)	TCB 1571 to 3215	2	
		Hex. Nut, 3/4" N.F.		2	
		Lockwasher, 3/4"		2	
55959 DB	5	Steering Clutch Release Fork with Pivot Bushing, 55955 D	TCB 3216 Up	2	
55959 DBX	5	Steering Clutch Release Fork and Pivot, Complete			
		(Will Work for 54103 DX, 55959 DA, DX and DAX)	TCB 501 to 3215	2	
53598 D	6	Steering Clutch Release Fork Pivot Bushing	TCB 501 to 1060	2	
55955 D	6	Steering Clutch Release Fork Pivot Bushing	TCB 1061 Up	2	
47727 D	7	Steering Clutch Release Fork Pivot	TCB 501 to 1060	2	
55954 D	7	Steering Clutch Release Fork Pivot	TCB 1061 up	2	

CHASSIS

PART NUMBER	REF. NO.	DESCRIPTION	SERIAL NUMBER	NO. REQ'D
47726 D	8	Steering Clutch Release Fork Pivot Lock Nut		2
52279 D	9	Steering Clutch Release Fork Pivot Lock		
		(Order 60095 D and 60096 D)	TCB 501 to 1844	2
		Cap Screw, 1/2 x 1" N.C. Hex Head		2
		Lockwasher, 1/2"		2
55957 DB	9	Steering Clutch Release Fork Pivot Lock		
		(Order 60095 D and 60096 D)	TCB 1845 to 2256	2
		Cap Screw, 1/2 x 1" N.C. Hex Head		2
		Lockwasher, 1/2"		2
60096 D	9A	Steering Clutch Release Fork Pivot Nut Lock		
		(With 60095 D Will Work for 55957 DB and 52279 D)	TCB 2257 Up	2
60095 D	9B	Steering Clutch Release Fork Pivot Lock		
		(With 60096 D Will Work for 55957 DB and 52279 D)	TCB 2257 Up	2
		Cap Screw, 1/2 x 1" N.C. Hex Head		2
		Lockwasher, 1/2"		2
42298 DB	10	Steering Clutch Release Pin Bushing		4
Q 3617	11	Steering Clutch Release Bearing Lubricator		2
52244 DX	12	Steering Clutch Release Bearing Grease Tube with Coupling		
		and Bracket		2
		Machine Bolt, 1/4 x 3/4" N.C.		4
		Hex Nut, 1/4" N.C.		4
		Lockwasher, 1/4"		4
52241 D	13	Steering Clutch Shaft Coupling (6 Teeth)		2
48230 DA	14	Steering Clutch Shaft Coupling Bolt Lock		6
50398 D	15	Steering Clutch Shaft Coupling Bolt		12
52869 D	16	Steering Clutch Shaft Coupling Oil Seal		2
46851 D	17	Drive Bevel Gear Bearing Cage Cap Gasket		2
8239 DX	18	Drive Bevel Gear Bearing Cage Cap with Oil Seal, 52869 D		2
		Cap Screw, 1/2 x 1-1/2" N.C. Hex Head		8
		Hex Jam Nut, 1/2" N.F.		8
41634 H	19A	Drive Bevel Gear Bearing Cage Cap Lockwasher		
		(Shakeproof No. 1224)		16
47728 D	20	Steering Clutch Release Collar Bushing (52243 DAX Will Work)	TCB 501 to 3208	2
52243 DAX	22	Steering Clutch Release Collar with 1/8" Headless Pipe Plug		
		(Will Work for 52243 DX and 47728 D)		2
		Close Nipple 1/8"		2
47619 D	23	Steering Clutch Release Thrust Bearing (Fafnir 1519 - 1C)		
		(Order 55745 D)		2
55745 D	23	Steering Clutch Release Thrust Bearing (Aetna A-1555)		
		(Will Work for 47619 D)		2

FINAL DRIVE—STEERING CLUTCH

PART NUMBER	REF. NO.	DESCRIPTION	SERIAL NUMBER	NO. REQ'D	
52240 DA	24	Steering Clutch Shaft		2	
6470 D	25	Steering Clutch Hub Plate		2	
		Cap Screw, 7/16 x 1" N.C. Hex. Head		12	
		Lockwasher, 7/16"		16	
46826 D	27	Steering Clutch Driving Disc (External Teeth)		20	15
46825 DA	28	Steering Clutch Friction Disc (Internal Teeth) FIBRE		22	16
8236 D	29	Steering Clutch Pressure Spring Retainer		2	
54610 DA	30	Steering Clutch Pressure Spring		2	
8238 DB	31	Steering Clutch Hub		2	
8237 DA	32	Steering Clutch Pressure Plate		2	
54969 D	33	Steering Clutch Pressure Plate Dowel Bolt		6	
		Lockwasher, 7/16"		6	
46831 D	34	Steering Clutch Pilot Bearing Lubricator		2	
8235 D	35	Steering Clutch Drum		2	
		Cap Screw, 7/16 x 1" N.F. Hex. Head		16	
		Lockwasher, 7/16"		16	
53389 D	36	Steering Clutch Pilot Bearing (N.D. 48508)		2	
50098 DA	37	Steering Clutch Pilot Bearing Retainer	TCB 501 to 1239	2	
50098 DAX	37	Steering Clutch Pilot Bearing Retainer (With Pin 57750 D)	TCB 1240 Up	2	
50099 D	38	Steering Clutch Pilot Bearing Retainer Bolt		2	
		Lockwasher, 1/2"		2	
52239 D	39	Steering Clutch Pilot Bearing Spacer		2	
57750 D	40	Steering Clutch Pilot Bearing Retainer Pin	TCB 1240 Up	2	
52242 DB	41	Steering Clutch, Complete		2	

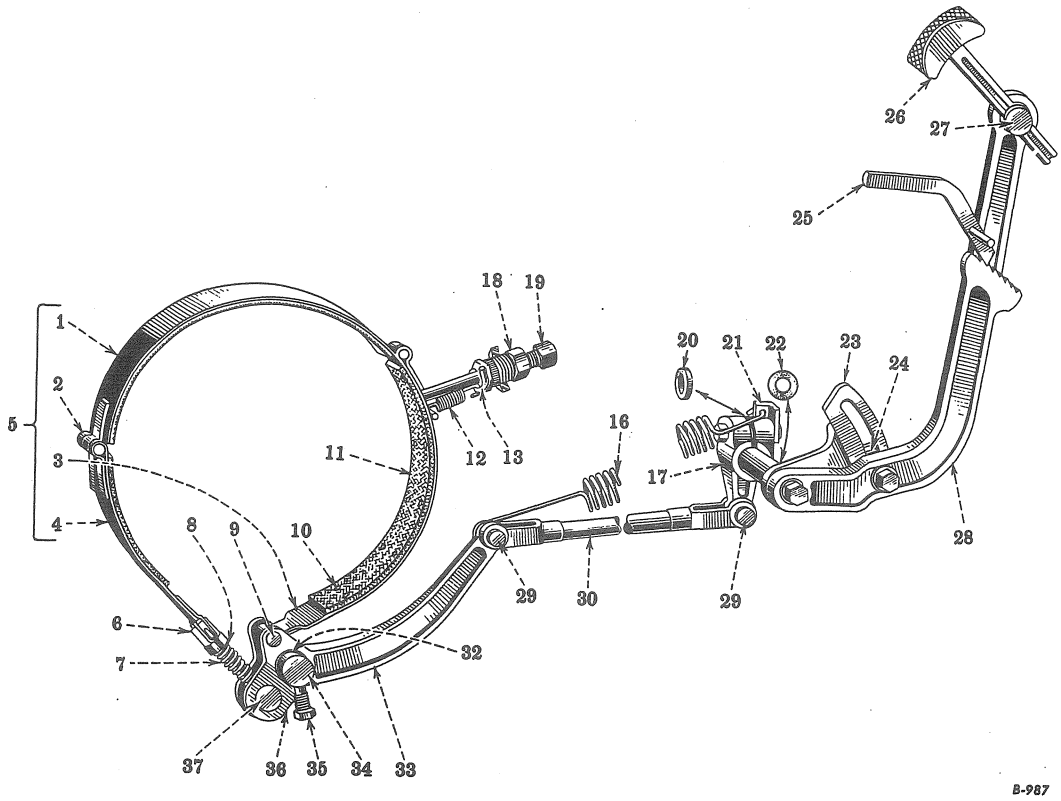

Reference numbers only are shown in illustration. Use I H C part numbers in ordering.
Unnumbered parts in the illustrations are the same as corresponding parts shown with numbers.

FINAL DRIVE—STEERING BRAKES AND CONTROL

47958 DXA	1	Steering Brake Band, Center with Lining, 47961 DA and		
		14 Rivets, 21406 H (Order 53520 DA or 68632 D)	2	
47962 D	2	Steering Brake Band Joint Pin	4	
		Cotter Pin, 3/32 x 1"	4	
53489 DXA	3	Steering Brake Band, Front, Complete (Order 53520 DA or 68632 D)	2	
47959 DXA	4	Steering Brake Band, Rear, Complete (Order 53520 DA or 68632 D)	2	
53520 DA	5	Steering Brake Band (With Woven Lining), Complete		
		(Will Work for 47958 DXA, 47959 DXA, and 53439 DXA)		
		(68632 D Will Work)	2	

CHASSIS

PART NUMBER	REF. NO.	DESCRIPTION	SERIAL NUMBER	NO. REQ'D
68632 D	5	Steering Brake Band (With Moulded Lining), Complete		
		(Will Work for 47958 DXA, 47959 DXA and 53489 DXA)		
		(53520 DA Will Work)		2
46028 D	6	Steering Brake Band Adjusting Bolt Spacer		2
46029 D	7	Steering Brake Band Release Spring		2
41509 D	8	Steering Brake Band Release Spring Washer		2
48047 D	9	Steering Brake Band Pivot Joint Pin	TCB 501 to 1274	2
57905 D	9	Steering Brake Band Pivot Joint Pin	TCB 1275 Up	2
21406 H	10	Steering Brake Band Lining Rivet, .186 x 3/8"		
		(Type "C" - Plain Brass) (Woven Lining)		(*) 76
21444 H	10	Steering Brake Band Lining Rivet, .186 x 1/2"		
		(Type "C" - Plain Brass)		8
47961 DA	11	Steering Brake Band Lining (Order 68630 D or 68636 D)		6
68630 D	11	Steering Brake Band Lining - Woven, Complete		
		(Will Work for 47961 DA) (68636 D Will Work)		2
68636 D	11	Steering Brake Band Lining - Moulded, Complete		
		(68630 D Will Work)		2
51399 D	12	Steering Brake Band Anchor Spring (Order 56479 D)	TCB 501 to 1774	1
56475 D	12	Steering Brake Band Anchor Spring	TCB 1775 Up	2
56479 D	12	Steering Brake Band Anchor Spring, 56475 D		
		with 2 Hooks, 56477 D (will work for 51399 D)	TCB 1775 Up	2
56477 D	13	Steering Brake Band Anchor Spring Hook	TCB 1775 Up	4
53495 D	16	Steering Brake Rod Return Spring		2
8444 D	17	Steering Brake Lever		2
		Cap Screw. 1/2 x 2-1/4" N.F. Hex. Head		2
		Hex Nut, 1/2" N.F.		2
		Lockwasher, 1/2"		2

(*) 68 Required with Moulded Lining

CHASSIS

PART NUMBER	REF. NO.	DESCRIPTION	SERIAL NUMBER	NO. REQ'D
46022 DA	18	Steering Brake Anchor Spring Anchor		2
		Hex. Jam Nut, 1" N.C. z		2
		Lockwasher, 1"		2
53490 D	19	Steering Brake Band Set Screw		2
		Hex. Nut, 5/8" N.C.		2
20841 D	20	Steering Brake Lever Key		2
53497 D	21	Steering Brake Rod Return Spring Anchor		2
41519 D	22	Steering Brake Pedal Shaft Dirt Seal		2
53503 D	23	Steering Brake Pedal Shaft and Adjuster, L.H.		1
53504 D	23	Steering Brake Pedal Shaft and Adjuster, R.H.		1
53514 D	24	Steering Brake Pedal Adjuster Lock, Collar and Lockwasher		2
53506 D	25	Steering Brake Ratchet Pawl with Shaft, L.H.		1
		Cotter Pin, 1/8 x 5/8"		1
53507 D	25	Steering Brake Ratchet Pawl with Shaft, R.H.		1
		Cotter Pin, 1/8 x 5/8"		1
8625 D	26	Steering Brake Pedal Pad and Rod		2
46275 D	27	Steering Brake Pedal Pad and Rod Swivel		2
		Hex. Nut, 5/8" N.F.		2
		Lockwasher, 5/8"		2
8440 D	28	Steering Brake Pedal, L.H.		1
		Cap Screw, 1/2 x 1-1/2" N.F. Hex. Head		1
		Cap Screw, 1/2 x 3" N.F. Hex. Head		1
		Lockwasher, 1/2"		2
8441 D	28	Steering Brake Pedal, R.H.		1
		Cap Screw, 1/2 x 1-1/2" N.F. Hex. Head		1
		Cap Screw, 1/2 x 3" Hex. Head		1
		Lockwasher, 1/2"		2

CHASSIS

PART NUMBER	REF. NO.	DESCRIPTION	SERIAL NUMBER	NO. REQ'D
15041 H	29	Steering Brake Rod End Pin		4
		Cotter Pin, 1/8 x 3/4"		4
53508 DX	30	Steering Brake Rod with Welded Yoke Ends		2
46023 D	32	Steering Brake Pivot Lever Bushing		4
8439 DAX	33	Steering Brake Pivot Lever with 2 Bushings, 46023 D		2
46024 D	34	Steering Brake Pivot Shaft (Order 48045 D)	TCB 501 to 3030	2
48045 D	34	Steering Brake Pivot Shaft (Will Work for 46024 D)	TCB 3031 Up	2
46025 D	35	Steering Brake Pivot Shaft Stud		2
		Lockwasher, 1/2"		2
46027 D	36	Steering Brake Band Adjusting Bolt		2
		Hex. Nut, 1/2" N.F.		2
41506 D	37	Steering Brake Band Adjusting Bolt Pin		2

HAND BRAKE

602 D		Hand Brake Lever Pawl Holder (⊛ Used on Modified Units Adams 70, 75, 80 and 86)		1
		Cap Screw, 5/16 x 1-1/2" N.F. Hex Head		4
		Lockwasher, 5/16"		4
4406 DB		Hand Brake Lever Pawl (⊛ Used on Modified Units Adams 70, 75, 80 and 86)		1
14898 DX		Hand Brake Lever Grip with Pin, 1197 T		
		(⊛ Used on Modified Units Adams 70, 75 and 80)		1
20899 DAX		Hand Brake Lever with Grip, 14898 DX		
		(⊛ Used on Modified Units Adams 70, 75, 80 and 86)		1
20901 D		Hand Brake Lever Pawl Connecting Rod		
		(⊛ Used on Modified Units Adams 70, 75, 80 and 86)		1
20909 D		Hand Brake Lever Ratchet (⊛ Used on Modified Units Adams 70, 75, 80 and 86)		1
1197 T		Hand Brake Lever Grip Pin (⊛ Used on Modified Units Adams 70, 75 and 80)		1
1825 T		Hand Brake Lever Pawl Spring (⊛ Used on Modified Units Adams 70, 75, 80 and 86)		1

⊛ - For Tabulation of Modifications see Introduction Page

(Revised 2-'46)

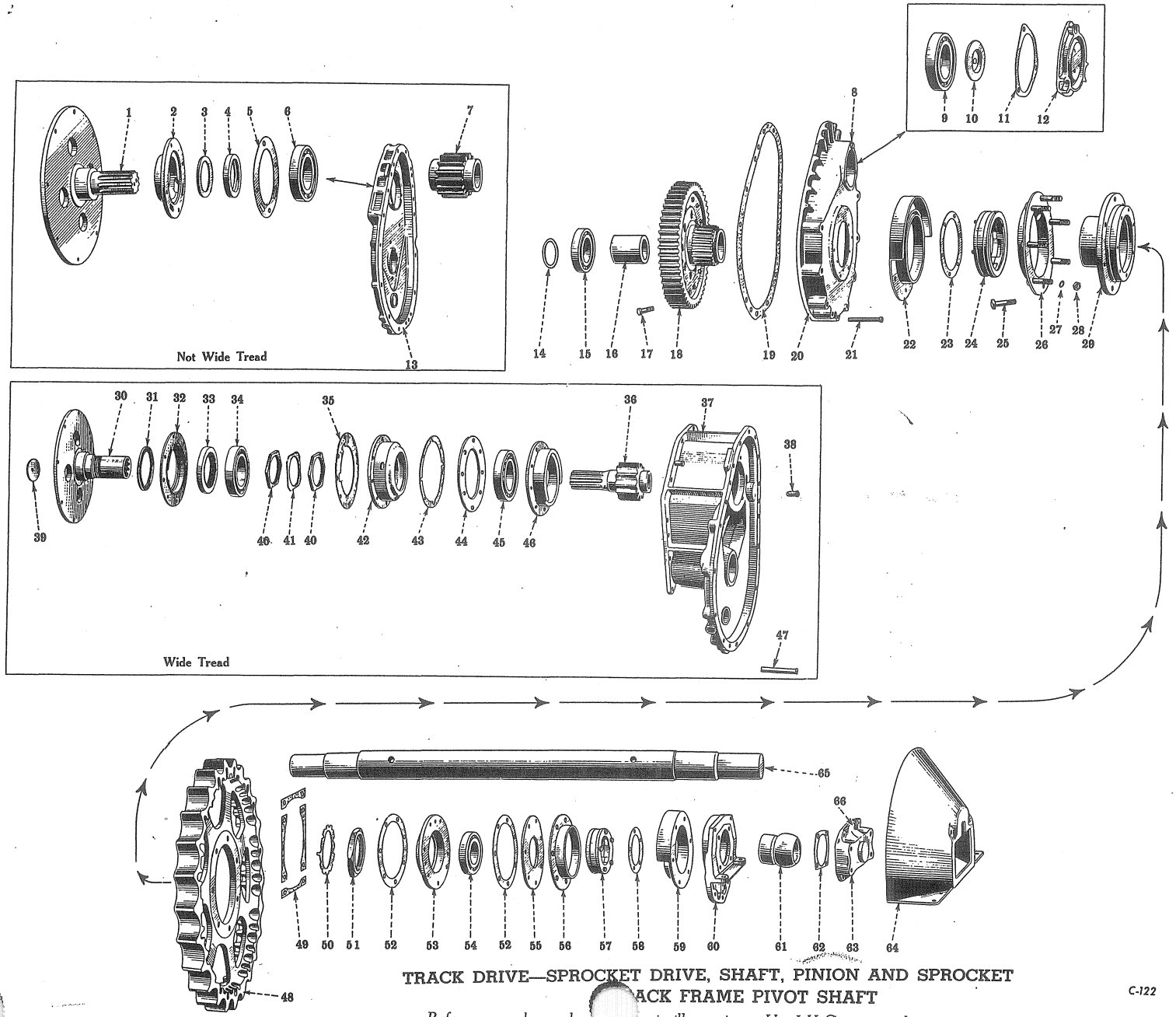

TRACK DRIVE—SPROCKET DRIVE, SHAFT, PINION AND SPROCKET
TRACK FRAME PIVOT SHAFT

Reference numbers only a[illegible]m in illustration. Use I H C part numbers in ordering.

Unnumbered parts in the illustrations are the same as corresponding parts shown [illegible]

C-122

TRACK DRIVE—SPROCKET DRIVE, SHAFT, PINION AND SPROCKET, TRACK FRAME PIVOT SHAFT

PART NUMBER	REF. NO.	DESCRIPTION	SERIAL NUMBER	NO. REQ'D
52209 D	1	Sprocket Drive Pinion Shaft (not Wide Tread)		2
8510 DX	2	Sprocket Drive Pinion Inner Bearing Retainer with Oil Seal, 53770 D		
		and Felt Washer, 54011 D (not Wide Tread)		2
		Cap Screw, 3/8 x 1" N.C. Hex. Head		4
		Lockwasher, 3/8"		4
54011 D	3	Sprocket Drive Pinion Shaft Felt Washer (not Wide Tread)		2
53770 D	4	Sprocket Drive Pinion Shaft Oil Seal (not wide Tread)		2
54009 D	5	Sprocket Drive Pinion Inner Bearing Retainer Gasket		
		(not Wide Tread)		2
41470 D	6	Sprocket Drive Pinion Inner Bearing (N.D. 7215)		
		(not Wide Tread)		2
52207 D	7	Sprocket Drive Pinion (12 Teeth) (not Wide Tread)		
		(Order 64491 D)	TCB 501 to 4382	2
64487 D	7	Sprocket Drive Pinion (12 Teeth) (not Wide Tread)	TCB 4383 Up	2
64491 D	7	Sprocket Drive Pinion, 64487 D and Gear, 64490 D		
		(not Wide Tread) (will work for 52207 D and 52230 DA)	TCB 501 to 4382	2
54006 D	8	Sprocket Drive Gear Outer Housing to Main Frame Dowel Pin		4
22977 DA	8	Sprocket Drive Gear Outer Housing to Carrier Dowel Pin, Upper		4
ST 228	9	Sprocket Drive Pinion Outer Bearing (I.H.C.)		
		(will Work for 41513 V)		2
41513 V	9	Sprocket Drive Pinion Outer Bearing (N.D. 1215)		
		(ST 228 will work)		2
46821 D	10	Sprocket Drive Pinion Outer Bearing Retainer Washer		2
		Cap Screw, 7/16 x 1-1/4" N.F. Hex. Head		4
		Lockwasher, 7/16"		4
46823 D	11	Sprocket Drive Pinion Outer Bearing Cap Gasket		2
8232 D	12	Sprocket Drive Pinion Outer Bearing Cap		2
		Cap Screw, 1/2 x 1-1/4" N.C. Hex. Head		6
		Lockwasher, 1/2"		6
8512 DAX	13	Sprocket Drive Gear Housing, Inner, L.H. and R.H., with		
		Pipe Plugs (not Wide Tread)		2
		Cap Screw, 1/2 x 1-3/8" N.C. Hex. Head		16
		Lockwasher, 1/2"		16
		Pipe Plug, 3/4" Countersunk Head		2
		Pipe Plug, 1-1/2" Countersunk Head		2
46810 D	14	Track Frame Pivot Shaft Oil Seal Ring		2
46746 D	15	Sprocket Drive Gear Bearing, Inner (N.D. 1217-75)		2
52225 D	16	Sprocket Drive Gear Bearing Spacer, Long		2

CHASSIS

PART NUMBER	REF. NO.	DESCRIPTION	SERIAL NUMBER	NO. REQ'D
46744 D	17	Sprocket Drive Gear Carrier Dowel Bolt		20
		Slotted Hex. Nut, 1/2" N.F.		20
		Cotter Pin, 1/8 x 1"		20
52230 DA	18	Sprocket Drive Gear (Order 64491 D or 64492 D), Complete	TDCB 501 to 4382	2
		Rivet, 1/2 x 1-7/8" Round Head (Cold Headed Annealed)		20
64490 DA	18	Sprocket Drive Gear with Carrier, Complete	TCB 4383 Up	1
		Rivet, 1/2 x 1-7/8" Round Head (Cold Headed Annealed)		20
54012 D	19	Sprocket Drive Gear Housing Gasket		2
8513 DA	20	Sprocket Drive Gear Housing, Outer		2
		Cap Screw, 1/2 x 1-1/2" N.F. Hex Head (Wide Tread)		16
		Cap Screw, 1/2 x 2-3/4" N.C. Hex Head (not Wide Tread)		18
		Cap Screw, 1/2 x 2-3/4" N.C. Hex Head (Wide Tread)		18
		Cap Screw, 1/2 x 3-1/2" N.C. Hex Head (not Wide Tread)		16
		Hex. Nut, 1/2" N.F. (Wide Tread)		16
		Lockwasher, 1/2"		34
54007 D	21	Sprocket Drive Gear Outer Housing to Inner Housing Dowel Pin		
		(not Wide Tread).		2
52231 D	22	Sprocket Drive Oil Seal Guard with Inner and Outer Dirt		
		Deflectors		2
		Cap Screw, 3/8 x 3/4" N.C. Hex. Head		12
		Lockwasher, 3/8"		12
46751 DA	23	Sprocket Drive Oil Seal Gasket		2
53537 D	24	Sprocket Drive Oil Seal		2
52226 D	25	Sprocket Carrier Bolt (Order 52226 DAX)	TCB 501 to 4234	16
	28	Hex. Nut, 5/8" N.F. (Order 25388 DAX)	TDB 501 to 2734	16
52226 DA	25	Sprocket Carrier Bolt	TCB 4235 Up	16
52226 DAX	25	Sprocket Carrier Bolt with Nut, 32454 D and Lockwasher, 47415 H		
		(will work for 52226 D)	TCB 501 to 4234	16
52222 D	26	Sprocket Drive Oil Seal Dirt Deflector		2
47415 H	27	Sprocket Carrier Bolt Lockwasher (Shakeproof No. 1128)	TCB 2735 Up	16
25388 DA	28	Sprocket Carrier Bolt Nut	TCB 2735 to 4234	16
25388 DAX	28	Sprocket Carrier Bolt Nut with Lockwasher, 47415 H		
		(will work for Standard 5/8" N.F. Hex. Nut)	TCB 501 to 2734	16
25388 DAY	28	Sprocket Carrier Bolt Nut, Complete (Consists of two 25388 DAX)		
		(will work for 52227 D)	TCB 501 to 2734	16
32454 D	28	Sprocket Carrier Bolt Nut	TCB 4235 Up	16
52229 D	29	Sprocket Carrier		2
52210 DAXA	30	Sprocket Drive Pinion Shaft with Plug, 42687 V - and 2 Nuts		
		54013 (Wide Tread)		2
54008 D	31	Sprocket Drive Pinion Shaft Felt Washer (Wide Tread)		2

CHASSIS

PART NUMBER	REF. NO.	DESCRIPTION	SERIAL NUMBER	NO. REQ'D
8508 DX	32	Steering Clutch Support Bearing Retainer with Felt Washer		
		and Oil Seal, 54005 D (Wide Tread)		2
		Cap Screw, 3/8 x 3/4" N.C. Hex Head		8
		Cap Screw, 3/8 x 1-3/8" N.C. Hex Head		8
		Lockwasher, 3/8"		16
54005 D	33	Sprocket Drive Pinion Shaft Oil Seal (Wide Tread)		2
42239 D	34	Steering Clutch Support Bearing (N.D. 7516) (Wide Tread)		2
54004 D	35	Steering Clutch Support Bearing Retainer Gasket (Wide Tread)		2
54017 DA	36	Sprocket Drive Pinion (13 Teeth) (Wide Tread) (Order 64492 D)	TCB 501 to 4382	2
64488 D	36	Sprocket Drive Pinion (12 Teeth) (Wide Tread)	TCB 4383 Up	2
64492 D	36	Sprocket Drive Pinion, 64488 D and Gear, 64490 D (Wide Tread)		
		(will work for 54017 DA and 52230 DA)	TCB 501 to 4382	2
8511 DAX	37	Sprocket Drive Carrier L.H. and R.H. with Pipe Plugs		
		(Wide Tread)		2
		Cap Screw, 1/2 x 1-3/8" N.C. Hex. Head		32
		Lockwasher, 1/2"		32
		Pipe Plug, 3/4" Countersunk Head		2
		Pipe Plug, 1-1/2" Countersunk Head		2
22977 DA	38	Sprocket Drive Carrier to Main Frame Dowel Pin (Wide Tread)		4
42687 V	39	Sprocket Drive Pinion Shaft Expansion Plug		
		(will work for 54002 D) (Wide Tread)	TCB 2386 Up	2
54002 D	39	Sprocket Drive Pinion Shaft Expansion Plug (Wide Tread)		
		(Order 42687 V)	TCB 501 to 2385	2
54013 D	40	Steering Clutch Support Bearing Nut (Wide Tread)		4
54016 D	41	Steering Clutch Support Bearing Nut Lock (Wide Tread)		2
8507 D	42	Steering Clutch Support Bearing Cage, L.H. (Wide Tread)		1
8516 D	42	Steering Clutch Support Bearing Cage, R.H. (Wide Tread)		1
54003 D	43	Steering Clutch Support Bearing Cage Gasket (Wide Tread)		2
54010 D	44	Sprocket Drive Pinion Inner Bearing Retainer (Wide Tread)		2
		Cap Screw, 3/8 x 1-1/4" N.C. Hex. Head		4
		Lockwasher, 3/8"		4
ST 228	45	Sprocket Drive Pinion Inner Bearing (I.H.C.) (Wide Tread)		
		(will work for 41513 V)		2
41513 V	45	Sprocket Drive Pinion Inner Bearing (N.D. 1215) (Wide Tread)		
		(ST 228 will work)		2
8509 D	46	Sprocket Drive Pinion Inner Bearing Cage (Wide Tread)		2
54007 D	47	Sprocket Drive Gear Outer Housing to Carrier Dowel Pin, Lower		
		(Wide Tread)		2
8450 D	48	Sprocket (27 Teeth)		2
8775 D	48	Cutaway Sprocket (27 Teeth) (Special)		2
52227 D	49	Sprocket Carrier Bolt Lock (Order 25388 DAY)	TCB 501 to 2734	8
46795 D	50	Sprocket Drive Gear Carrier Nut Lock		2
46794 DA	51	Sprocket Drive Gear Carrier Nut		2
54513 D	52	Sprocket Drive Gear Outer Bearing Cage Gasket		4
8566 DA	53	Sprocket Drive Gear Outer Bearing Cage		2
23276 H	54	Sprocket Drive Gear Bearing, Outer (N.D. 1214)		
		(ST 223 will work)		2
ST 223	54	Sprocket Drive Gear Bearing, Outer (I.H.C.)		
		(will work for 23276 H)		2

CHASSIS

PART NUMBER	REF. NO.	DESCRIPTION	SERIAL NUMBER	NO. REQ'D
54514 D	55	Sprocket Drive Gear Outer Bearing Retainer		2
54515 D	56	Track Frame Pivot Oil Seal Dirt Deflector		2
		Cap Screw, 7/16 x 1-1/2" N.F. Hex. Head		14
		Lockwasher, 7/16"		14
53538 D	57	Track Frame Pivot Oil Seal		2
46799 DA	58	Track Frame Pivot Oil Seal Gasket		2
46800 D	59	Track Frame Pivot Oil Seal Guard with Inner and Outer Dirt		
		Deflectors		2
		Cap Screw, 3/8 x 3/4" N.C. Hex. Head		12
		Lockwasher, 3/8"		12
8451 DA	60	Track Frame Pivot Bracket		2
		Cap Screw, 5/8 x 1-1/4" N.F. Hex Head		
		(Extended Track Frame - Special)		4
		Cap Screw, 5/8 x 1-5/8" N.F. Hex. Head		6
		Cap Screw, 5/8 x1-3/4" N.F. Hex. Head		
		(Not Extended Track Frame)		4
		Hex. Nut, 5/8" N.F.		(*) 10
		Lockwasher, 5/8"		(*) 10
6458 D	61	Track Frame Pivot Bearing		2
		Cap Screw, 1/2 x 1-1/2" N.F. Hex. Head		8
		Lockwasher, 1/2"		8
53627 D	62	Track Frame Pivot Bracket Cap Gasket		2
8461 DAX	63	Track Frame Pivot Bracket Cap with Corks		2
		Cap Screw, 5/8 x 1-5/8" N.C. Hex. Head		8
		Lockwasher, 5/8"		8
		Cork, 1/2 x 11/16" Dia. x 7/8" Long		8
53539 DAX	64	Sprocket Shield with Support and Spacer		2
		Cap Screw, 7/16 x 1-3/4" N.C. Hex Head		4
		Cap Screw, 1/2 x 1" N.F. Hex Head		
		(Extended Track Frame - Special)		8
		Cap Screw, 1/2 x 1-1/4" N.F. Hex. Head		
		(Not Extended Track Frame)		8
		Hex. Nut, 1/2" N.F. (Not Extended Track Frame)		8
		Lockwasher, 7/16"		4
		Lockwasher, 1/2"		8
52291 D	65	Track Frame Pivot Shaft (Not Wide Tread)		1
52292 D	65	Track Frame Pivot Shaft (Wide Tread)		1
Q 3673	66	Track Frame Pivot Lubricator		2
57536 D		Cutaway Sprocket Attachment (Special)		
		(Consists of 2 Sprockets, 8775 D and 2 Lockwires, 43712 DB)		1
22307 H		Track Frame Pivot Bracket Bolt Lockwasher		
		(Shake Proof No. 1228)		4

(*) - Required Extended Track Frame - Special

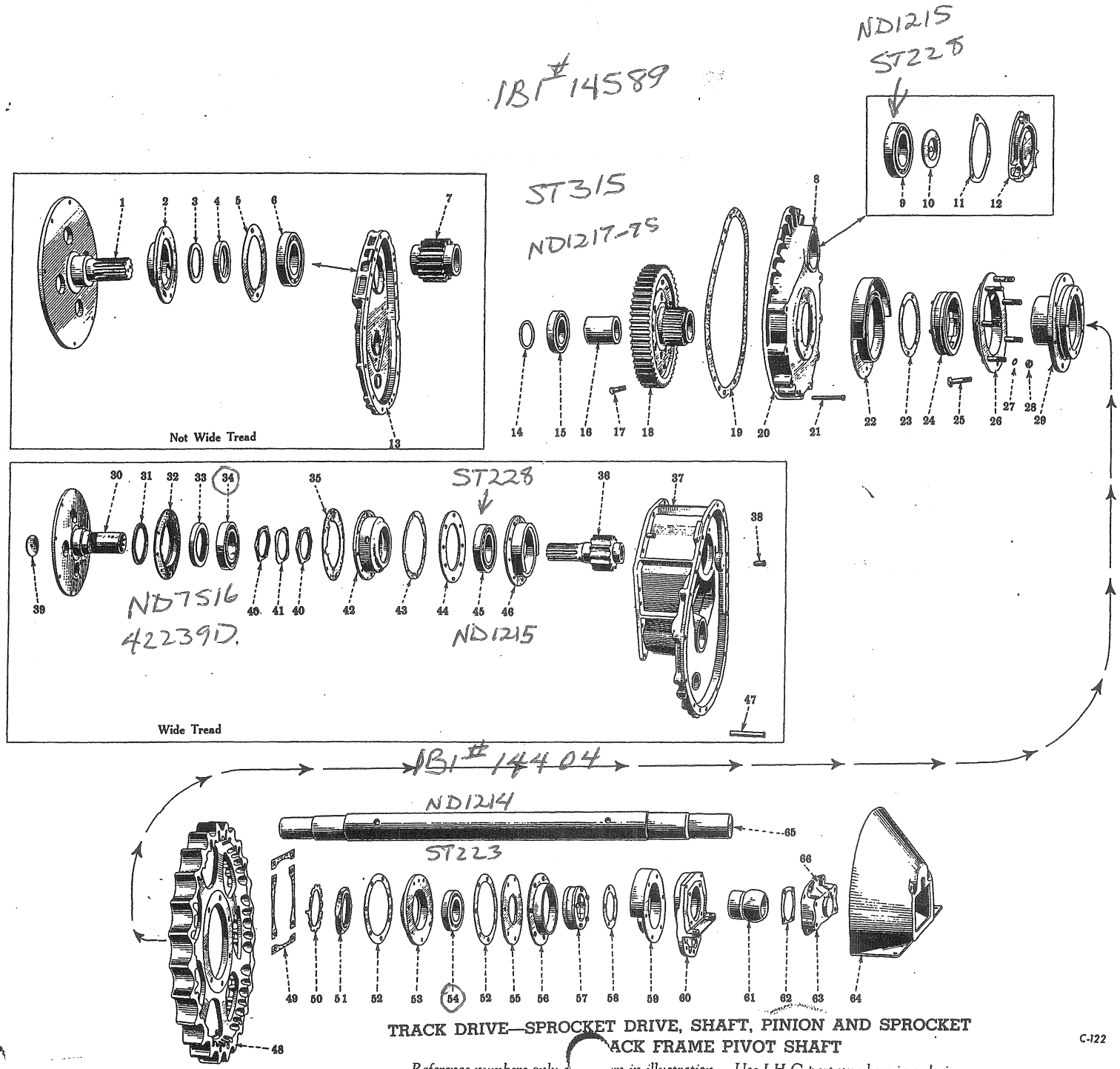

TRACK DRIVE—SPROCKET DRIVE, SHAFT, PINION AND SPROCKET
TRACK FRAME PIVOT SHAFT

Reference numbers only a[illegible]m in illustration. Use I H C part numbers in ordering.
Unnumbered parts in the illustrations are the same as corresponding parts shown with numbers

C-122

GENUINE IHC PARTS

PRINTED IN UNITED STATES OF AMERICA

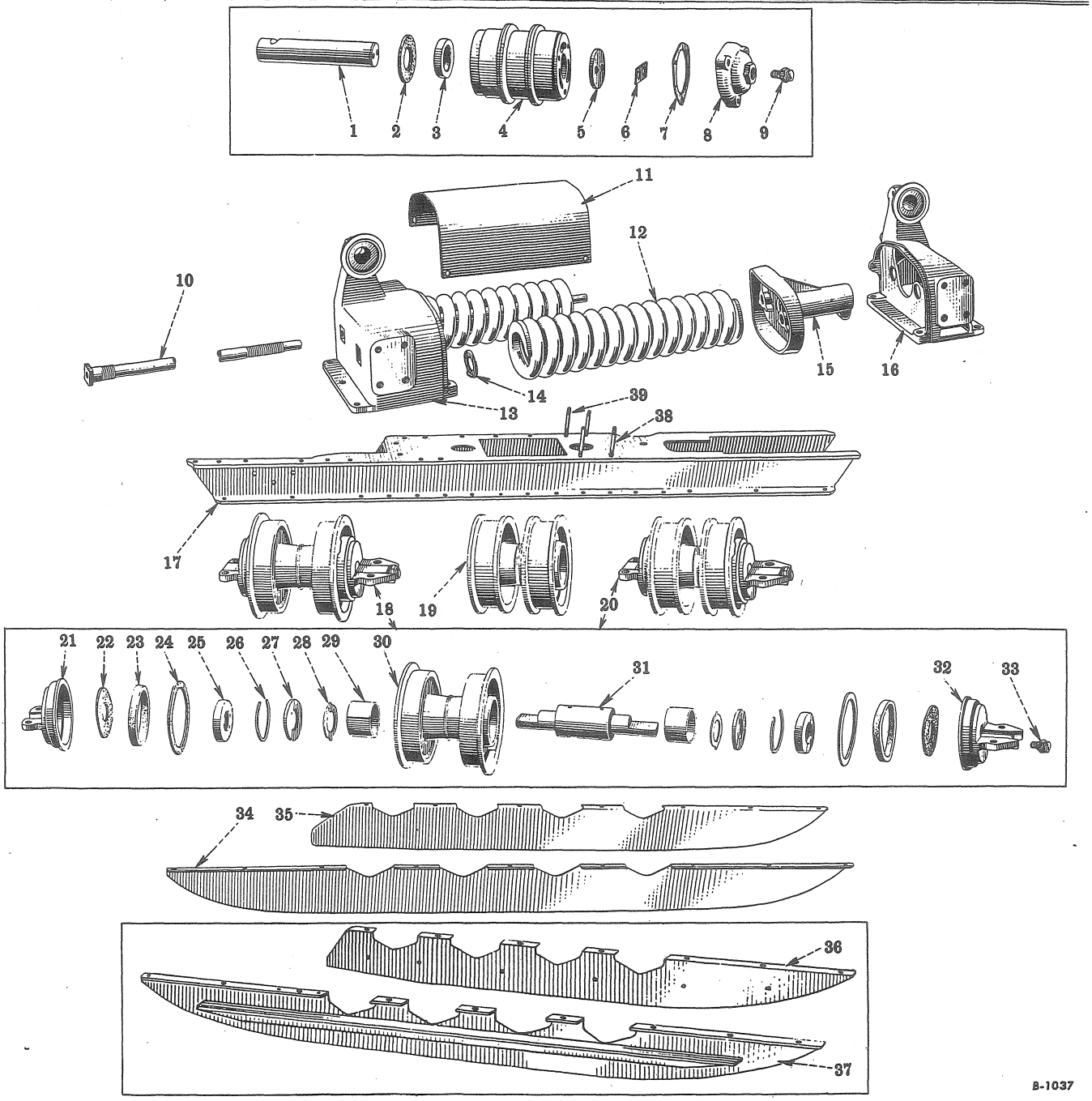

Reference numbers only are shown in illustration. Use I H C part numbers in ordering.

Unnumbered parts in the illustrations are the same as corresponding parts shown with numbers.

TRACK ASSEMBLY—TRACK FRAME, SPRING, TRACK IDLER AND ROLLERS

47558 D	1	Track Idler Shaft	4	
47334 D	2	Track Idler Felt Washer	4	
18558 D	3	Track Idler Oil Seal	4	
8403 DX	4	Track Idler with Oil Seal, 18558 D	4	
41431 D	5	Track Idler Thrust Washer	4	
		Cap Screw, 1/2 x 1-1/4" N.F. Hex. Head	8	
35089 DA	6	Track Idler Thrust Washer Bolt Lock	4	
48229 D	7	Track Idler Cap Gasket	4	

PART NUMBER	REF. NO.	DESCRIPTION	SERIAL NUMBER	NO. REQ'D
		TRACK ASSEMBLY—TRACK FRAME, SPRING, TRACK IDLER AND ROLLERS		
6637 D	8	Track Idler Cap		4
		Cap Screw, 1/2 x 1-1/2" N.C. Hex. Head		12
		Lockwasher, 1/2"		12
37290 D	9	Track Idler Lubricator		4
55442 D	10	Track Spring Adjusting Rod		4
		Hex. Jam Nut, 1" N.F. (Castellated) (Cadmium Plated)		4
		Cotter Pin, 1/8 x 2"		4
49586 D	11	Track Spring Guard		2
		Cap Screw, 3/8 x 3/4" N.C. Hex. Head		8
		Lockwasher, 3/8"		8
48038 DA	12	Track Spring		4
6601 DD	13	Track Spring Retainer, Rear, L.H. (Rigid Track Frame)		1
6601 DDX	13	Track Spring Retainer, Rear, L.H. with 4 Corks and		
		6 Studs, 63265 D (Not Rigid Track Frame)		1
		Cap Screw, 1/2 x 3-1/2" N.F. Hex. Head		1
		Cap Screw, 3/4 x 1-7/8" N.F. Hex. Head		6
		Hex. Nut, 1/2" N.F.		1
		Lockwasher, 1/2"		1
		Lockwasher, 3/4"		6
		Cork, 5/8 x 13/16 Dia. x 1" Long		
		(XX Quality - Size 7)		4
6602 DD	13	Track Spring Retainer, Rear, R.H. (Rigid Track Frame)		1
6602 DDX	13	Track Spring Retainer, Rear, R.H. with 4 Corks and		
		6 Studs, 63265 D (Not Rigid Track Frame)		1
		Cap Screw, 1/2 x 3-1/2" N.F. Hex Head		1
		Cap Screw, 3/4 x 1-7/8" N.F. Hex Head		6
		Hex. Nut, 1/2" N.F.		1
		Lockwasher, 1/2"		1
		Lockwasher, 3/4"		6
		Cork, 5/8 x 13/16" Dia. x 1" Long		
		(XX Quality - Size 7)		4
55443 D	14	Track Spring Adjusting Rod Lockwasher		4
		Hex. Jam Nut, 1-1/4" N.F.		4
6605 DA	15	Track Spring Retainer, Front		2
		Cap Screw, 1/2 x 2-1/4" N.F. Hex. Head		2
		Hex. Nut, 1/2" N.F.		2
		Lockwasher, 1/2"		2
67897 D	16	Track Frame and Track Spring Guide, L.H., Complete		
		(Will Work for 8487 DAX)	TCB 501 to 8761	1
67898 D	16	Track Frame and Track Spring Guide, R.H., Complete		
		(Will Work for 8488 DAX)	TCB 501 to 8761	1
9630 DX	16	Track Frame and Track Spring Guide, L.H. with Corks	TCB 8762 Up	1
		Cap Screw, 1/2 x 3-1/2" N.F. Hex Head		1
		Cap Screw, 3/4 x 1-5/8" N.C. Hex Head		6
		Hex Nut, 1/2" N.F.		1
		Lockwasher, 1/2"		1
		Lockwasher, 3/4"		6
		Corks, 9/16 x 3/4" Dia. x 15/16" Long (XX Quality-Size 6)		2
		Corks, 5/8 x 13/16" Dia. x 1" Long (XX Quality-Size 7)		8

CHASSIS

PART NUMBER	REF. NO.	DESCRIPTION	SERIAL NUMBER	NO. REQ'D
9631 DX	16	Track Frame and Track Spring Guide, R. H. with Corks	TCB 8762 Up	1
		Cap Screw, 1/2 x 3-1/2" N.F. Hex Head		1
		Cap Screw, 3/4 x 1-5/8" N.C. Hex Head		6
		Hex Nut, 1/2" N.F.		1
		Lockwasher, 1/2"		1
		Lockwasher, 3/4"		6
		Corks, 9/16 x 3/4" Dia. x 15/16" Long (XX Quality-Size 6)		2
		Corks, 5/8 x 13/16" Dia. x 1" Long (XX Quality-Size 7)		8
8487 DAX	16	Track Frame and Track Spring Guide, L.H. with Corks		
		Order 67897 D)	TCB 501 to 8761	1
		Cap Screw, 1/2 x 3-1/4" N.F. Hex. Head		1
		Cap Screw, 3/4 x 1-5/8" N.C. Hex. Head		6
		Hex. Nut, 1/2" N.F.		1
		Lockwasher, 1/2"		1
		Lockwasher, 3/4"		6
		Corks, 11/16 x 7/8" Dia. x 1-1/16" Long (XX Quality - Size 8)		8
8488 DAX	16	Track Frame and Track Spring Guide, R.H. with Corks		
		Order 67898 D	TCB 501 to 8761	1
		Cap Screw, 1/2 x 3-1/4" N.F. Hex. Head		1
		Cap Screw, 3/4 x 1-5/8" N.C. Hex. Head		6
		Hex. Nut, 1/2" N.F.		1
		Lockwasher, 1/2"		1
		Lockwasher, 3/4"		6
		Cork, 11/16 x 7/8" Dia. x 1-1/16" Long (XX Quality - Size 8)		8
53222 DA	17	Track Frame, L.H., (Not Extended Track Frame)		1
53223 DA	17	Track Frame, R.H., (Not Extended Track Frame)		1
64001 DA	17	Track Frame, L.H., Complete (Extended Track Frame-Special)		1
64002 DA	17	Track Frame, R. H., Complete (Extended Track Frame-Special)		1
67727 DA	17	Track Frame, L.H. (Extended Track Frame)		
		(*Used on Modified Units Bucyrus-Erie No. 30 and 31)		1
67728 DA	17	Track Frame R.H. (Extended Track Frame)		
		(*Used on Modified Units Bucyrus-Erie No. 30 and 31)		1
53365 DA	18	Track Roller (Nos. 1,3 & 5), Complete (Single Flange)		
		(Extended Track Frame-Special) (See Note)		6
53365 DA	18	Track Roller, Nos. 1 and 4, Complete (Single Flange)		
		(Not Extended Track Frame)		4
53368 D	19	Track Roller, 53364 DX with Bushings and 2 Oil Seals, 53358 DA		
		(Not Extended Track Frame)		4
53364 DX	19	Track Roller (Double Flange) (Nos. 2 & 4)		
		(Extended Track Frame-Special) (See Note)		4
53364 DX	19	Track Roller, Nos. 2 and 3 with Bushing (Double Flange)		
		(Not Extended Track Frame)		4
53366 DA	20	Track Roller (Nos. 2 & 4), Complete (Double Flange)		
		(Extended Track Frame-Special) (See Note)		4
53366 DA	20	Track Roller, Nos. 2 and 3, Complete (Double Flange)		
		(Not Extended Track Frame)		4
8404 D	21	Track Roller Shaft Bracket, Inner (Not Extended Track Frame)		8
		Cap Screw, 1/2 x 1-3/4" N.F. Hex Head		16
		Hex. Nut, 1/2" N.F.		16
		Lockwasher, 1/2"		16
8404 D	21	Track Roller Shaft Bracket, Inner		
		(Extended Track Frame-Special) (See Note)		10
		Cap Screw, 1/2 x 1-3/8" N.F. Hex Head		20
		Lockwasher, 1/2"		20
		(*) - For Tabulation of Modifications see Introduction Page		
		NOTE - (Also Used on Modified Units Bucyrus-Erie No. 30 and 31)		

(Revised 2-'46)

CHASSIS

PART NUMBER	REF. NO.	DESCRIPTION	SERIAL NUMBER	NO. REQ'D
53360 D	22	Track Roller Felt Washer, Outer (Not Extended Track Frame)		16
53360 D	22	Track Roller Felt Washer, Outer (Extended Track Frame-Special) (See Note)		20
53361 D	23	Track Roller Felt Washer, Center (Not Extended Track Frame)		16
53361 D	23	Track Roller Felt Washer, Center (Extended Track Frame-Special) (See Note)		20
53359 D	24	Track Roller Sealing Washer, Inner (Not Extended Track Frame)		16
53359 D	24	Track Roller Sealing Washer, Inner		
		(Extended Track Frame-Special) (See Note)		20
53358 DA	25	Track Roller Oil Seal (Not Extended Track Frame)		16
53358 DA	25	Track Roller Oil Seal (Extended Track Frame-Special) (See Note)		20
53373 D	26	Track Roller Retainer Snap Ring (Order 60573 D)	TCB 501 to 3123	16
60573 D	26	Track Roller Retainer Snap Ring (Will Work for 53373 D)		
		(Not Extended Track Frame)	TCB 2124 up	16
60573 D	26	Track Roller Retainer Snap Ring (Extended Track Frame-Special) (See Note		20
53362 D	27	Track Roller Retainer (Not Extended Track Frame)		16
53362 D	27	Track Roller Retainer (Extended Track Frame-Special) (See Note)		20
53369 DX	28	Track Roller Thrust Washer (Set of 2) (Not Extended Track Frame)		8
53369 DX	28	Track Roller Thrust Washer (Set of 2)		
		(Extended Track Frame-Special) (See Note)		10
53372 DX	29	Track Roller Bushing (Set of 2) (Not Extended)		8
53372 DX	29	Track Roller Bushing (Set of 2) (Extended Track Frame-Special) (See Note)		10
53367 D	30	Track Roller, 53363 DX with Bushings and 2 Oil Seals, 53358 DA		
		(Not Extended Track Frame)		4
53367 D	30	Track Roller with Bushing (Nos. 1,3 & 5)		
		53363 DX and 2 Oil Seals, 53358 DA		
		(Extended Track Frame-Special) (See Note)		6
53363 DX	30	Track Roller, Nos. 1 and 4 with Bushing (Single Flange)		
		(Not Extended Track Frame)		4
53363 DX	30	Track Roller (Single Flange) (Nos. 1,3 & 5)		
		(Extended Track Frame-Special) (See Note)		6
53370 D	31	Track Roller Shaft (Inner and Outer Halves)		
		(Not Extended Track Frame)		8
53370 D	31	Track Roller Shaft (Extended Track Frame-Special) (See Note)		10
8405 D	32	Track Roller Shaft Bracket, Outer (Not Extended Track Frame)		8
		Cap Screw, 1/2 x 1-3/4" N.F. Hex. Head		16
		Hex. Nut, 1/2"		16
		Lockwasher, 1/2"		16
8405 D	32	Track Roller Shaft Bracket, Outer		
		(Extended Track Frame-Special) (See Note)		10
		Cap Screw, 1/2 x 1-3/8" N.F. Hex Head		20
		Lockwasher, 1/2"		20
37290 D	33	Track Roller Lubricator (Not Extended Track Frame)		8
37290 D	33	Track Roller Lubricator (Extended Track Frame-Special) (See Note)		10
53354 DA	34	Track Roller Shield, Outer, L.H.		
		(Not Heavy Duty or Extended Track Frame)		1
		Cap Screw, 1/2 x 1-1/2" N.F. Hex. Head		9
		Hex. Nut, 1/2" N.F.		9
		Lockwasher, 1/2"		9
53355 DA	34	Track Roller Shield, Outer, R.H.		
		(Not Heavy Duty or Extended Track Frame)		1
		Cap Screw, 1/2 x 1-1/2" N.F. Hex. Head		9
		Hex. Nut, 1/2" N.F.		9
		Lockwasher, 1/2"		9
		NOTE - Also Used on Modified Units Bucyrus-Erie No. 30 and 31		

CHASSIS

PART NUMBER	REF. NO.	DESCRIPTION	SERIAL NUMBER	NO. REQ'D	
58294 DAX	34	HEAVY DUTY TRACK ROLLER SHIELD, OUTER, L.H. WITH STIFFENER			
		(SPECIAL)		1	
		CAP SCREW, 1/2 x 1-5/8" N.F. HEX. HEAD		9	
		HEX. NUT, 1/2" N.F.		9	
		LOCKWASHER, 1/2"		9	
58295 DAX	34	HEAVY DUTY TRACK ROLLER SHIELD, OUTER, R.H. WITH STIFFENER			
		(SPECIAL)		1	
		CAP SCREW, 1/2 x 1-5/8" N.F. HEX. HEAD		9	
		HEX. NUT, 1/2" N.F.		9	
		LOCKWASHER, 1/2"		9	
53352 DA	35	TRACK ROLLER SHIELD, INNER, L.H.			
		(NOT HEAVY DUTY OR EXTENDED TRACK FRAME)		1	
		CAP SCREW, 1/2 x 1-1/2" N.F. HEX. HEAD		7	
		HEX. NUT, 1/2" N.F.		7	
		LOCKWASHER, 1/2"		7	
53353 DA	35	TRACK ROLLER SHIELD, INNER, R.H.			
		(NOT HEAVY DUTY OR EXTENDED TRACK FRAME)		1	
		CAP SCREW, 1/2 x 1-1/2" N.F. HEX. HEAD		7	
		HEX. NUT, 1/2" N.F.		7	
		LOCKWASHER, 1/2"		7	
58296 DAX	35	HEAVY DUTY TRACK ROLLER SHIELD, INNER, L.H. WITH STIFFENER		1	
		(SPECIAL)		1	
		CAP SCREW, 1/2 x 1-5/8" N.F. HEX. HEAD		7	
		HEX. NUT, 1/2" N.F.		7	
		LOCKWASHER, 1/2"		7	
58297 DAX	35	HEAVY DUTY TRACK ROLLER SHIELD, INNER, R.H. WITH STIFFENER			
		(SPECIAL)		1	
		CAP SCREW, 1/2 x 1-5/8" N.F. HEX. HEAD		7	
		HEX. NUT, 1/2" N.F.		7	
		LOCKWASHER, 1/2"		7	
64003 D	36	TRACK ROLLER SHIELD, INNER, L.H. (EXTENDED TRACK FRAME-SPECIAL) (SEE NOTE)		1	
		CAP SCREW, 1/2 x 1-1/8" N.F. HEX HEAD		8	
		LOCKWASHER, 1/2"		8	
64004 D	36	TRACK ROLLER SHIELD, INNER, R.H. (EXTENDED TRACK FRAME-SPECIAL) (SEE NOTE)		8	
64005 D	37	TRACK ROLLER SHIELD, OUTER, L.H. (EXTENDED TRACK FRAME-SPECIAL) (SEE NOTE)		1	
		CAP SCREW, 1/2 x 1-1/8" N.F. HEX HEAD		10	
		LOCKWASHER, 1/2"		10	
64006 D	37	TRACK ROLLER SHIELD, OUTER, R.H. (EXTENDED TRACK FRAME-SPECIAL) (SEE NOTE)		1	
		CAP SCREW, 1/2 x 1-1/8" N.F. HEX HEAD		10	
		LOCKWASHER, 1/2"		10	
63989 D	38	RIGID TRACK FRAME CROSSBAR STUD, SHORT			
		(EXTENDED TRACK FRAME-SPECIAL)		4	
63990 D	39	RIGID TRACK FRAME CROSSBAR STUD, LONG			
		(EXTENDED TRACK FRAME-SPECIAL)		4	
58298 D		HEAVY DUTY TRACK ROLLER SHIELD ATTACHMENT		1	
63987 D		RIGID TRACK FRAME CROSSBAR CLAMP (EXTENDED TRACK FRAME-SPECIAL)		4	
64010 DA		EXTENDED TRACK FRAME ATTACHMENT - SPECIAL - (FACTORY APPLIED ONLY)			
		(FOR TRACTORS EQUIPPED WITH RIGID TRACK FRAME ATTACHMENT 59528 D AND			
		LARGE DIAMETER HEAVY FRONT IDLER ATTACHMENT 62438 D		1	
251713 R91		EXTENDED TRACK FRAME UNIT (SAME AS ATTACHMENT 64010 DA EXCEPT 67727 DA			
		67728 DA TRACK FRAMES ARE USED INSTEAD OF 64001 DA			
		AND 64002 DA AND LESS 3 SECTION TRACK CHAIN 65259 D AND TRACK CHAIN AND			
		SHOES 65260 D) (*USED ON MODIFIED UNITS BUCYRUS-ERIE NO. 30 AND 31)		1	
		(*) - FOR TABULATION OF MODIFICATIONS SEE INTRODUCTION PAGE			
		NOTE - ALSO USED ON MODIFIED UNITS BUCYRUS-ERIE NO. 30 AND 31			

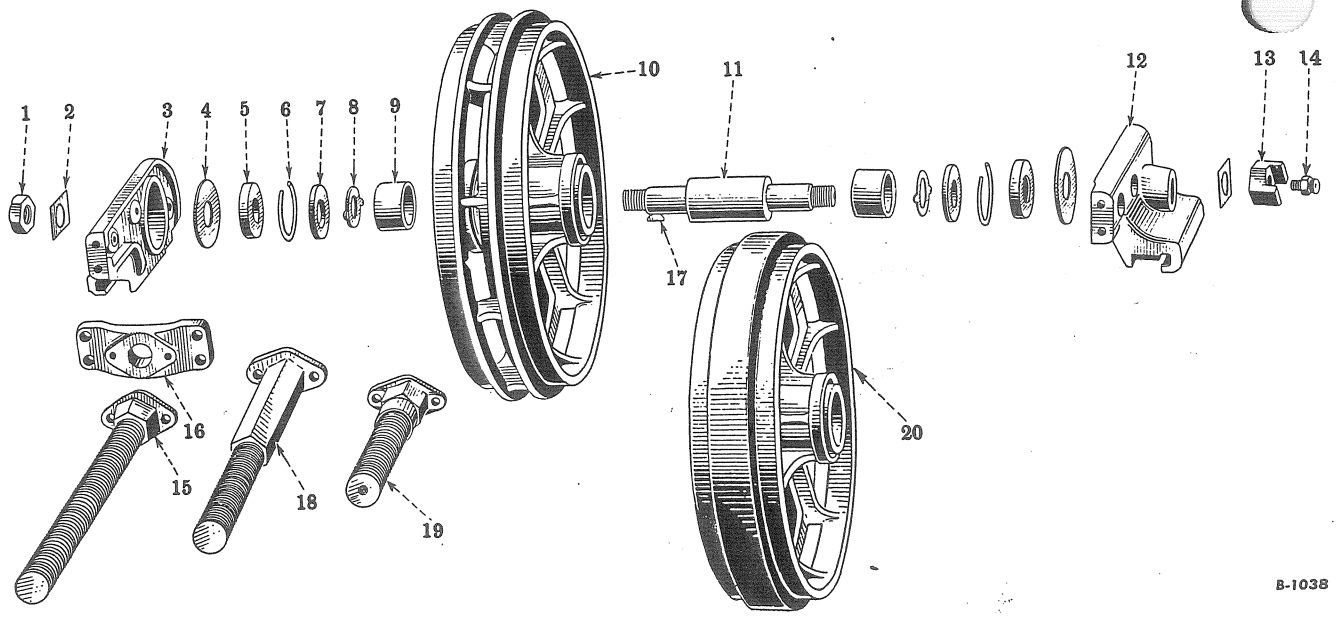

Reference numbers only are shown in illustration. Use I H C part numbers in ordering.
Unnumbered parts in the illustrations are the same as corresponding parts shown with numbers.

TRACK ASSEMBLY—FRONT IDLER

15644 D	1	Front Idler Shaft Nut, Inner		2
45797 D	2	Front Idler Shaft Nut Lock		4
8415 DB	3	Front Idler Guide, Inner, R.H. and Outer, L.H.		
		(will work for 8416 DB)		2
8416 DB	3	Front Idler Guide, Outer, L.H. (Order 8415 DB)		1
53360 D	4	Front Idler Felt Washer		4
53358 DA	5	Front Idler Oil Seal (See Note)		4
53373 D	6	Front Idler Retainer Snap Ring (Order 60573 D)	TCB 501 to 3123	4
60573 D	6	Front Idler Retainer Snap Ring (will work for 53373 D)	TCB 3124 Up	4
53362 D	7	Front Idler Retainer		4
53369 DX	8	Front Idler Thrust Washer (Set of 2)		2
53399 D	9	Front Idler Bushing (Order 53400 DX)		4
53400 DX	9	Front Idler Bushing (Set of 2) (will work for 53399 D) (See Note)		2
8419 DX	10	Front Idler with Bushings and 2 Oil Seals, 53358 DA		
		(not Heavy Front Idler)		2
53395 DA	11	Front Idler Shaft (Inner and Outer Halves)		2
		NOTE - Also Used on Modified Units Bucyrus-Erie No. 30 and 31		

CHASSIS

PART NUMBER	REF. NO.	DESCRIPTION	SERIAL NUMBER	NO. REQ'D	
8417 DB	12	Front Idler Guide, Inner, L. H. and Outer, R. H.		2	
8418 DB	12	Front Idler Guide, Outer, R.H. (Order 8417 DB)		1	
18573 DA	13	Front Idler Shaft Nut, Outer		2	
37290 D	14	Front Idler Lubricator		2	
48040 D	15	Front Idler Adjuster (Standard Track Frame)		2	
		Cap Screw, 1/2 x 1-1/4" N.F. Hex. Head (Cadmium Plated)		4	
		Lockwasher, 1/2" (Cadmium Plated)		4	
53398 D	16	Front Idler Guide Cross Plate		2	
		Cap Screw, 5/8 x 2" N.C. Hex. Head		8	
		Lockwasher, 5/8"		8	
SA 3215	17	Front Idler Shaft Key (Woodruff "G")		2	
63996 DA	18	Front Idler Adjuster (Extended Track Frame Special) (See Note)		2	
62488 D		Heavy Front Idler Attachment-Special (Factory Applied Only)		1	
62486 DA	19	Heavy Front Idler Adjuster (Special) (See Note)		2	
9314 DX	20	Heavy Front Idler with Bushings and 2 Oil Seals, 53358 DA			
		(Special) (See Note)		2	
251714 R91		Large Diameter Heavy Front Idler Attachment			
		(⊛ Used on Modified Units Bucyrus-Erie No. 30 and 31)		1	

⊛ - For Tabulation of Modifications see Introduction Page

NOTE - Also Used on Modified Units Bucyrus-Erie No. 30 and 31

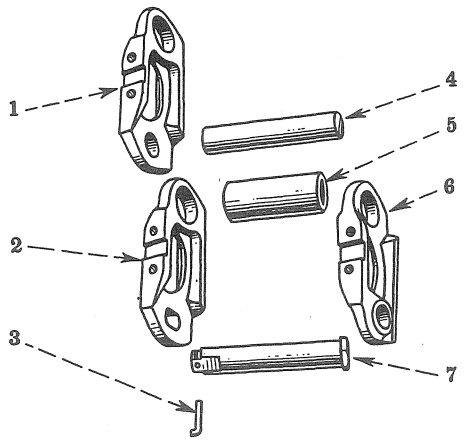

Reference numbers only are shown in illustration. Use I H C part numbers in ordering.

TRACK ASSEMBLY—TRACK CHAIN

53243 DA		TRACK CHAIN, COMPLETE (STANDARD TRACK FRAME AND FRONT IDLER)	
		(ORDER 65111 D)	2
53244 DA		TRACK CHAIN, COMPLETE WITH 13" SHOES	
		(STANDARD TRACK FRAME AND FRONT IDLER) (ORDER 65112 D)	2
63054 D		TRACK, COMPLETE	
		(STANDARD TRACK FRAME AND HEAVY FRONT IDLER - SPECIAL)	
		(ORDER 65122 D).	2
63055 D		TRACK, 65064 D WITH (13") SHOES, 136 BOLTS, 49362 D AND NUTS,	
		60221 DA (STANDARD TRACK FRAME AND HEAVY FRONT IDLER - SPECIAL)	
		(ORDER 65123 D)	2
65111 D		TRACK CHAIN, COMPLETE (3 SECTIONS)	
		(STANDARD TRACK FRAME AND FRONT IDLER) (WILL WORK FOR 53243 DA) TCB 2001 UP	2
65111 DX		TRACK CHAIN, COMPLETE (3 SECTIONS) WITH 132 TRACK SHOE	
		NUTS, 60221 DA (STANDARD TRACK FRAME AND FRONT IDLER)	
		(WILL WORK FOR 53243 D) TCB 501 TO 2000	2
65112 D		TRACK CHAIN, COMPLETE WITH 13" SHOES	
		(STANDARD TRACK FRAME AND FRONT IDLER)	
		(WILL WORK FOR 53244 DA)	2
65122 D		TRACK CHAIN, COMPLETE (3 SECTIONS)	
		(STANDARD TRACK FRAME AND HEAVY FRONT IDLER - SPECIAL)	
		(WILL WORK FOR 63054 D) (SEE NOTE)	2
65123 D		TRACK CHAIN, COMPLETE (3 SECTIONS) WITH 13" SHOES	
		(STANDARD TRACK FRAME AND HEAVY FRONT IDLER - SPECIAL)	
		(WILL WORK FOR 63055 D)	2
65259 D		TRACK CHAIN, COMPLETE (3 SECTIONS) (EXTENDED TRACK FRAME-SPECIAL)	2
65260 D		TRACK CHAIN, 65259 D WITH 13" SHOES, COMPLETE	
		(EXTENDED TRACK FRAME-SPECIAL)	2
67058 D		TRACK CHAIN, COMPLETE WITH 15-INCH SHOES (EXTENDED TRACK FRAME)	
		(⊛ USED ON MODIFIED UNITS BUCYRUS-ERIE NO. 30 AND 31	1
		⊛ - FOR TABULATION OF MODIFICATIONS SEE INTRODUCTION PAGE	
		NOTE - ALSO USED ON MODIFIED UNITS BUCYRUS-ERIE NO. 30 AND 31	

CHASSIS

PART NUMBER	REF. NO.	DESCRIPTION	SERIAL NUMBER	NO. REQ'D
53246 DA	1	Track Link, R.H. (Extended Track Frame-Special) (See Note)		66
53246 DA	1	Track Link, R.H. (Standard Track Frame and Front Idler)	TCB 2001 Up	60
53246 DA	1	Track Link, R.H.		
		(Standard Track Frame and Heavy Front Idler - Special)		62
53246 DAX	1	Track Link. R.H. with 2 Track Shoe Nuts, 60221 DA		
		(Will Work for 53246 D) (Standard Track Frame and Front Idler)	TCB 501 to 2000	60
53247 DA	2	Track Master Link (See Note)	TCB 2001 Up	6
53247 DAX	2	Track Master Link with 2 Track Shoe Nuts, 60221 DA		
		(Will Work for 53247 D) (Standard Track Frame and Front Idler)	TCB 501 to 2000	6
43712 DB	3	Track Master Link Pin Lockwire (See Note)		6
53249 DA	4	Track Link Pin (1.3720/1.3750 Dia. x 6-1/4" Long)		
		(Standard Track Frame and Front Idler)		60
53249 DA	4	Track Link Pin (1.3720/1.3750 Dia. x 6-1/4" Long)		
		(Standard Track Frame and Heavy Front Idler - Special)		66
53249 DA	4	Track Link Pin (1.3720/1.3750 Dia. x 6-1/4" Long)		
		(Extended Track Frame-Special) (See Note)		66
53248 D	5	Track Link Bushing (1.3800/1.3900 I.D. x 2.049/2.051 O.D. x 4-1/4" Long)		
		(Standard Track Frame and Front Idler)		66
53248 D	5	Track Link Bushing (1.3800/1.3900 I.D. x 2.049/2.051 O.D. x 4-1/4" Long)		
		(Standard Track Frame and Heavy Front Idler - Special)		68
53248 D	5	Track Link Bushing (1.3800/1.3900 I.D. x 2.049/2.051 O.D. x 4-1/4")		
		(Extended Track Frame-Special) (See Note)		72
53245 DA	6	Track Link, L.H. (Standard Track Frame and Front Idler)	TCB 2001 Up	66
53245 DA	6	Track Link, L.H.		
		(Standard Track Frame and Heavy Front Idler-Special)		68
53245 DA	6	Track Link, L.H. (Extended Track Frame-Special) (See Note)		72
53245 DAX	6	Track Link, L.H. with 2 Track Shoe Nuts, 60221 DA		
		(Will Work for 53245 D) (Standard Track Frame and Front Idler)	TCB 501 to 2000	66
53250 D	7	Track Master Link Pin (1.3595/1.3610 Dia. x 6-23/32" Long)		
		(See Note)		6

NOTE - Also Used on Modified Units Bucyrus-Erie No. 30 and 31

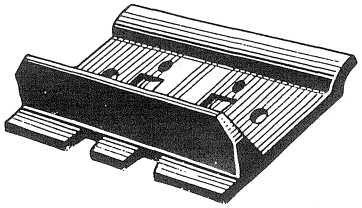

CLIPPED CORNER SHOE

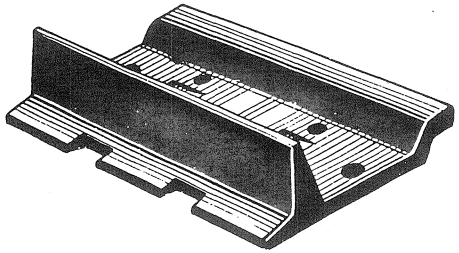

SQUARE CORNER SHOE

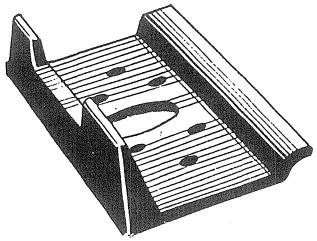

END LUG ICE GROUSER AND SNOW

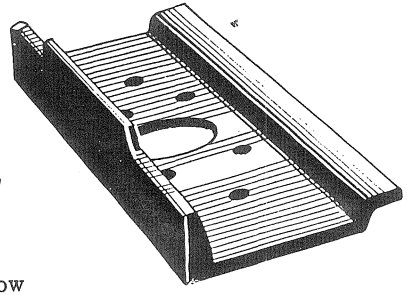

CENTER LUG ICE GROUSER AND SNOW

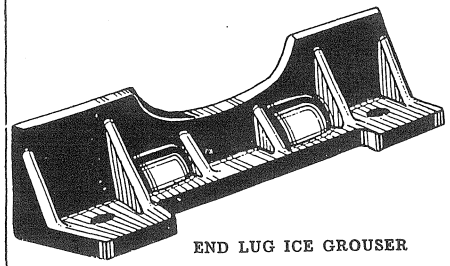

END LUG ICE GROUSER

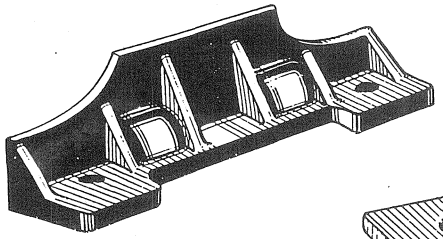

CENTER LUG ICE GROUSER

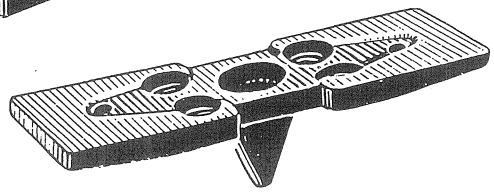

FLAT UNIVERSAL SHOE

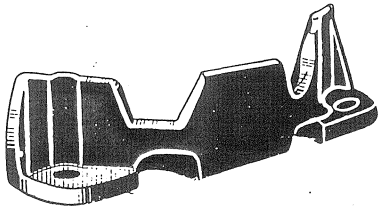

"V" TYPE ICE GROUSER

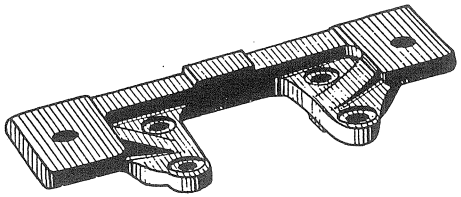

FLAT SKELETON SHOE

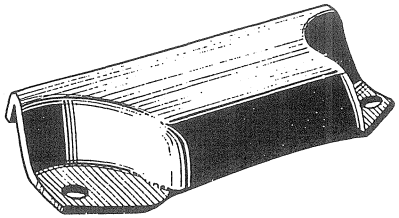

STREET PLATE

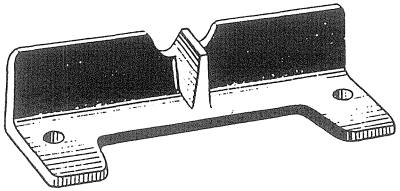

TEE TYPE SHOE

B-264 A

TRACK ASSEMBLY—TR[illegible]SHOES

GENUINE HD PARTS

PRINTED IN UNITED STATES OF AMERICA

Part Number	Name or Description	Size	Track Shoe	No. Used
	SQUARE CORNER			
49476 DB	Set of Track Shoes	8"	49465 DB	66
49477 DB	Set of Track Shoes (Standard)	13"	46839 DB	(#) 66
49478 DB	Set of Track Shoes	15"	49466 DB	66
49479 DB	Set of Track Shoes (Wide Tread)	16"	49467 DB	66
49480 DB	Set of Track Shoes (Wide Tread)	18"	49468 DB	66
49481 DB	Set of Track Shoes (Wide Tread)	20"	49469 DB	66
50313 DB	Set of Track Shoes	14"	50311 DB	66
	Included with the Above			
49362 D	Track Shoe Cap Screw			(⊕) 264
	Lockwasher, 7/16"			(⊕) 264
(†) 31115 D	Track Shoe Capscrew Nut			(⊕) 264
(‡) 60221 DA	Track Shoe Capscrew Nut			(⊕) 264
	CLIPPED CORNER			
49482 DB	Set of Track Shoes	8"	49470 DB	66
49483 DB	Set of Track Shoes	13"	49471 DB	66
49484 DB	Set of Track Shoes	15"	49472 DB	66
49485 DB	Set of Track Shoes (Wide Tread)	16"	49473 DB	66
49486 DB	Set of Track Shoes (Wide Tread)	18"	49474 DB	66
49487 DB	Set of Track Shoes (Wide Tread)	20"	49475 DB	66
50314 DB	Set of Track Shoes	14"	50312 DB	66
	Included with the Above			
49362 D	Track Shoe Cap Screw			264
	Lockwasher, 7/16"			264
(†) 31115 D	Track Shoe Capscrew Nut			264
(‡) 60221 DA	Track Shoe Capscrew Nut			264
	FLAT SHOES			
(△) 57176 D	Set of Universal Track Shoes (Order 57542)	14"	8745 D	66
(◇) 57542 D	Set of Universal Track Shoes (Will Work for 57176 D)	14"	5447 D	66
57528 D	Set of Skeleton Track Shoes	11"	5318 DA	66
251709 R91	Set of Special Overlapping Flat Shoes (⊛ Use on Bucyrus-Erie Modification No. 30 and 31)	15"	9245 DA	72
	Included with the Above			
36970 D	Track Shoe Cap Screw			(B) 264
	Lockwasher, 7/16"			(B) 264
(‡) 31115 D	Track Shoe Capscrew Nut			264
(‡) 60221 DA	Track Shoe Capscrew Nut			(B) 264

Part Number	Name or Description	Size	Track Shoe	No. Used
	ICE GROUSER			
57529 D	Set of Westco ("Vee" Type, Light) Track Shoes	13"	37822 D	66
	Cap Screw, 5/8 x 1-7/8" N.F. Hex Head			132
	Hex Nut, 5/8"			132
	Lockwasher, 5/8"			132
57530 D	Set of Westco ("Vee" Type, Heavy) Track Shoes	13-1/2"	37824 D	66
	Cap Screw, 5/8 x 1-7/8" N.F. Hex Head			132
	Hex Nut, 5/8"			132
	Lockwasher, 5/8"			132
67248 D	Set of (Tee Type Inclined) Track Shoes	10-3/4"	67247 D	66
	Cap Screw, 5/8 x 1-7/8" N.F. Hex Head			132
	Hex Nut, 5/8"			132
	Lockwasher, 5/8"			132
57531 D	Set of Track Shoes (Straight Detachable)	14"	3272 DA	66
57532 D	Set of Track Shoes (Inclined Detachable)	14"	5416 D	66
57533 D	Set of Track Shoes ("V" Detachable)	9"	3401 DA	66
	Included with the Above			
	Cap Screw, 5/8 x 2" N.F. Hex. Head			132
	Hex. Nut, 5/8" N.F.			132
	Lockwasher, 5/8"			132
	STAGGERED LUG ICE GROUSER AND SNOW			
57534 DA	Set of Track Shoes (Center Lug)	13"	57513 DA	33
	(End Lug)	13"	57514 DA	33
57535 DA	Set of Track Shoes (Center Lug)	15"	57515 DA	33
	(End Lug)	15"	57516 DA	33
	Included with the Above			
49362 D	Track Shoe Cap Screw			264
	Lockwasher, 7/16"			264
(†) 31115 D	Track Shoe Capscrew Nut			264
(‡) 60221 DA	Track Shoe Capscrew Nut			264
	STREET PLATES			
(A) 57526 D	Set of Street Plates		29802 DB	32
	Cap Screw, 5/8 x 1-3/8" N.F. Hex. Head			68
	Hex. Nut, 5/8" N.F.			68
	Lockwasher, 5/8"			68
(A) 57527 D	Set of Street Plates		29802 DB	66
	Cap Screw, 5/8 x 1-3/8" N.F. Hex. Head			132
	Hex. Nut, 5/8" N.F.			132
	Lockwasher, 5/8"			132

(†) Tractors TCB 501 to 2000
(‡) Tractors TCB 2001 Up
(△) Tractors TCB 501 to 1099
(◇) Tractors TCB 1100 Up

(#) 2 Additional Required on Tractors Equipped with Heavy Front Idler, 6 Additional Required on Tractors Equipped with Extended Track Frame. (⊕) 8 Additional Required on Tractors Equipped with Heavy Front Idler, 24 Additional Required on Tractors Equipped with Extended Track Frame. (⊛) - For Tabulation of Modifications see Introduction Page.
(A) Machine Attachment (B) 24 Additional on Bucyrus-Erie Modification Nos. 30 and 31

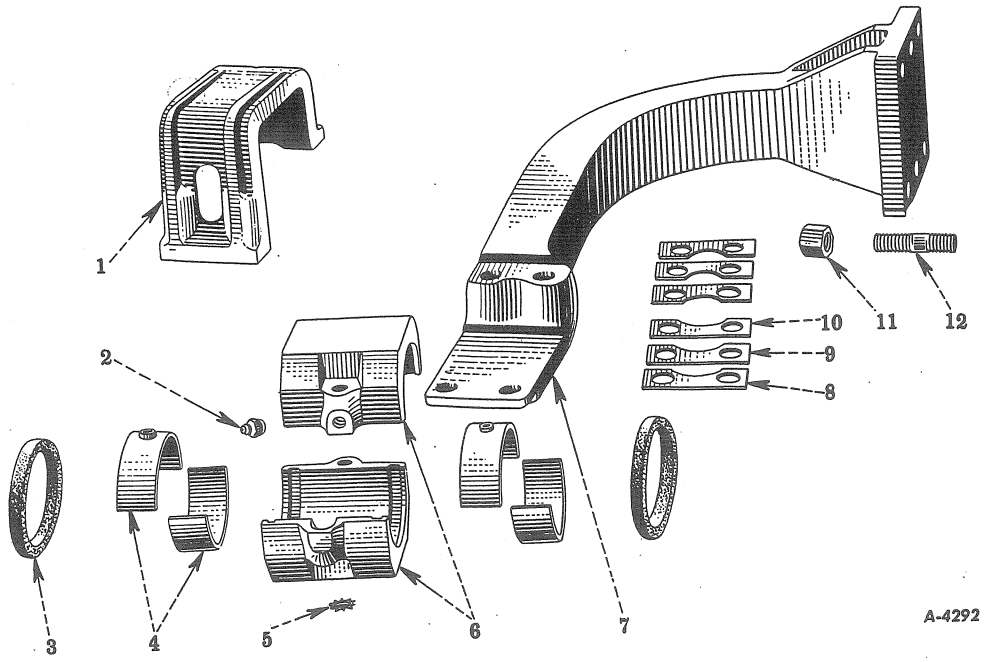

Reference numbers only are shown in illustration. Use I H C part numbers in ordering.
Unnumbered parts in the illustrations are the same as corresponding parts shown with numbers.

TRACK ASSEMBLY—TRACK FRAME DIAGONAL BRACE
(Not Rigid Track Frame)

8471 DA	1	Track Frame Diagonal Brace Clamp		2
		Cap Screw, 5/8 x 1-3/4" N.C. Hex. Head		4
		Cap Screw, 5/8 x 3-1/2" N.C. Hex. Head		4
		Lockwasher, 5/8"		8
Q 3615	2	Track Frame Diagonal Brace Bearing Lubricator (Lincoln No. 5000)		2
53656 D	3	Track Frame Diagonal Brace Bearing Felt		4
52294 D	4	Track Frame Diagonal Brace Bearing Bushing (Set of 4)	TCB 501 to 2629	2
57239 D	4	Track Frame Diagonal Brace Bearing Bushing (Set of 2), Complete	TCB 2630 Up	2
18942 D	5	Track Frame Diagonal Brace Bearing Lockwasher (Shakeproof No. 1122)		4
53655 D	6	Track Frame Diagonal Brace Bearing Set Upper and Lower,		
		Complete (Order 57235 D)	TCB 501 to 2629	2
57235 D	6	Track Frame Diagonal Brace Bearing Set Upper and Lower, Complete		
		(will work for 53655 D)	TCB 2630 Up	2
		Cap Screw, 7/16 x 3" N. F. Hex. Head		4
		Hex Nut, 7/16" N.F.		4

CHASSIS

PART NUMBER	REF. NO.	DESCRIPTION	SERIAL NUMBER	NO. REQ'D	
53657 DB	7	Track Frame Diagonal Brace, L.H. (not Wide Tread)		1	
53658 DB	7	Track Frame Diagonal Brace, R.H. (not Wide Tread)		1	
53659 DB	7	Track Frame Diagonal Brace, L.H. (Wide Tread)		1	
53660 DB	7	Track Frame Diagonal Brace, R.H. (Wide Tread)		1	
47780 D	8	Track Frame Diagonal Brace Clamp Shim (Light)		8	
47779 D	9	Track Frame Diagonal Brace Clamp Shim (Medium)		4	
47778 D	10	Track Frame Diagonal Brace Clamp Shim (Heavy)		4	
45293 D	11	Track Frame Diagonal Brace Stud Nut		12	
		Lockwasher, 3/4"		12	
48035 D	12	Track Frame Diagonal Brace Stud	TCB 501 to 8484	12	
63265 D	12	Track Frame Diagonal Brace Stud	TCB 8485 Up	12	

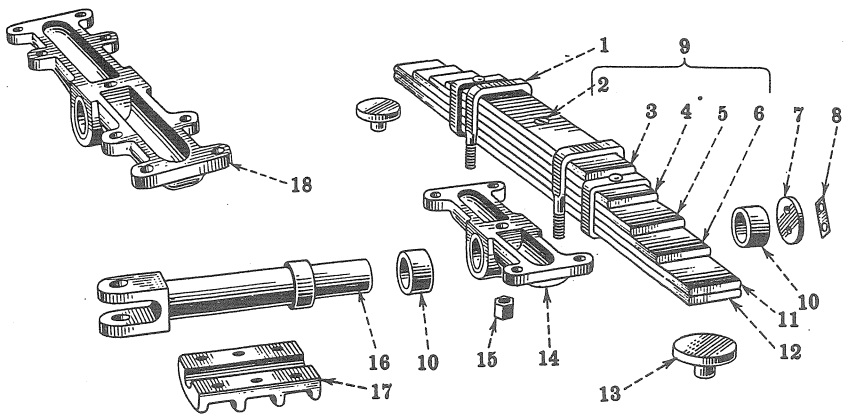

Reference numbers only are shown in illustration. Use I H C part numbers in ordering.
Unnumbered parts in the illustrations are the same as corresponding parts shown with numbers.

EQUALIZER SPRING

53898 DA	1	Equalizer Spring Clip	4	
55311 DX	2	Equalizer Spring Center Bolt with 1/2" N.F. Hex. Nut	1	
54027 D	3	Equalizer Spring Leaf, No. 6 (Not Wide Tread) (Not Heavy Duty)	1	
54029 D	3	Equalizer Spring Leaf, No. 6 (Wide Tread) (Not Rigid Track Frame) (Not Heavy Duty)	1	
47605 D	4	Equalizer Spring Leaf, No. 5 (Not Wide Tread) (Not Heavy Duty)	1	
47610 D	4	Equalizer Spring Leaf, No. 5 (Wide Tread) (Not Rigid Track Frame) (Not Heavy Duty)	1	
47604 D	5	Equalizer Spring Leaf, No. 4 (Not Wide Tread) (Not Heavy Duty)	1	
47609 D	5	Equalizer Spring Leaf, No. 4 (Wide Tread) (Not Rigid Track Frame) (Not Heavy Duty)	1	
47603 D	6	Equalizer Spring Leaf, No. 3 (Not Wide Tread) (Not Heavy Duty)	1	
47608 D	6	Equalizer Spring Leaf, No. 3 (Wide Tread) (Not Rigid Track Frame) (Not Heavy Duty)	1	
47596 D	7	Equalizer Spring Retaining Washer	1	
		Cap Screw, 1/2 x 1-1/4" N.F. Hex. Head	2	
40974 DA	8	Equalizer Spring Retaining Washer Lock	1	
53898 D	9	Equalizer Spring (6 Leaves) (Wide Tread) (Not Rigid Track Frame) (Not Heavy Duty)	1	
53897 D	9	Equalizer Spring (6 Leaves) (Not Wide Tread) (Not Heavy Duty)	1	
47594 DA	10	Equalizer Spring Saddle Bushing	2	
54026 D	11	Equalizer Spring Leaf, No. 2 (Not Wide Tread) (Not Heavy Duty)	1	
54028 D	11	Equalizer Spring Leaf, No. 2 (Wide Tread) (Not Rigid Track Frame) (Not Heavy Duty)	1	
47602 D	12	Equalizer Spring Leaf, No. 1 (Not Wide Tread) (Not Heavy Duty)	1	
47607 D	12	Equalizer Spring Leaf, No. 1 (Wide Tread) (Not Rigid Track Frame) (Not Heavy Duty)	1	
8493 D	13	Equalizer Spring Guide Pad (Not Rigid Track Frame)	2	
47598 DAXA	14	Equalizer Spring Saddle with 2 Bushings, 47594 DA (Not Wide Tread)	1	
41842 D	15	Equalizer Spring Clip Nut	8	
47595 D	16	Equalizer Spring Pivot Shaft	1	
6612 D	17	Equalizer Spring Pivot Shaft Cap	1	
		Cap Screw, 7/8 x 2-1/4" N.C. Hex. Head	6	
		Lockwasher, 7/8"	6	
47599 DAXA	18	Equalizer Spring Saddle with 2 Bushings, 47594 DA (Wide Tread)	1	

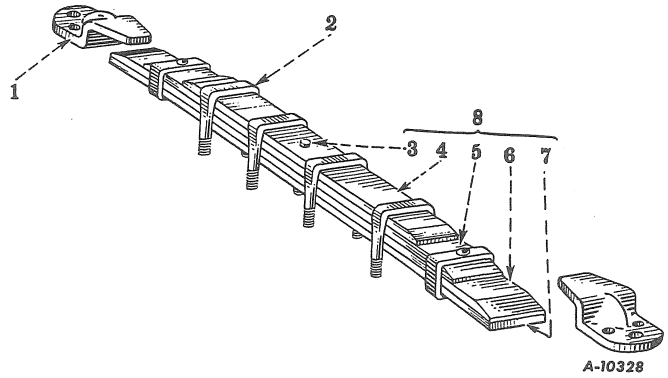

Reference numbers only are shown in illustration. Use I H C part numbers in ordering.
Unnumbered parts in the illustrations are the same as corresponding parts shown with numbers.

HEAVY DUTY EQUALIZER SPRING

12059 GT		Heavy Duty Equalizer Spring Attachment		
		(⊛ Also Used on Modified Units Bucyrus-Erie No. 30 and 31)		
12061 GT	1	Equalizer Spring Rebound Bracket	2	
		Cap Screw, 5/8 x 1-3/4" N.F. Hex Head	2	
		Cap Screw, 5/8 x 2-1/4" N.F. Hex Head	4	
		Hex Nut, 5/8" N.F.	6	
		Lockwasher, 5/8"	6	
53898 DA	2	Equalizer Spring Clip	4	
60476 DX	3	Equalizer Spring Center Bolt	1	
		Hex Nut, 1/2" N.F.	1	
12065 GT	4	Equalizer Spring Leaf No. 4	1	
12064 GT	5	Equalizer Spring Leaf No. 3	1	
12063 GT	6	Equalizer Spring Leaf No. 2	1	
12062 GT	7	Equalizer Spring Leaf No. 1	1	
12060 GT	8	Equalizer Spring (Includes Reference No. 3 through 7)	1	
		⊛ - For Tabulation of Modifications see Introduction Page		

(Revised 2-'46)

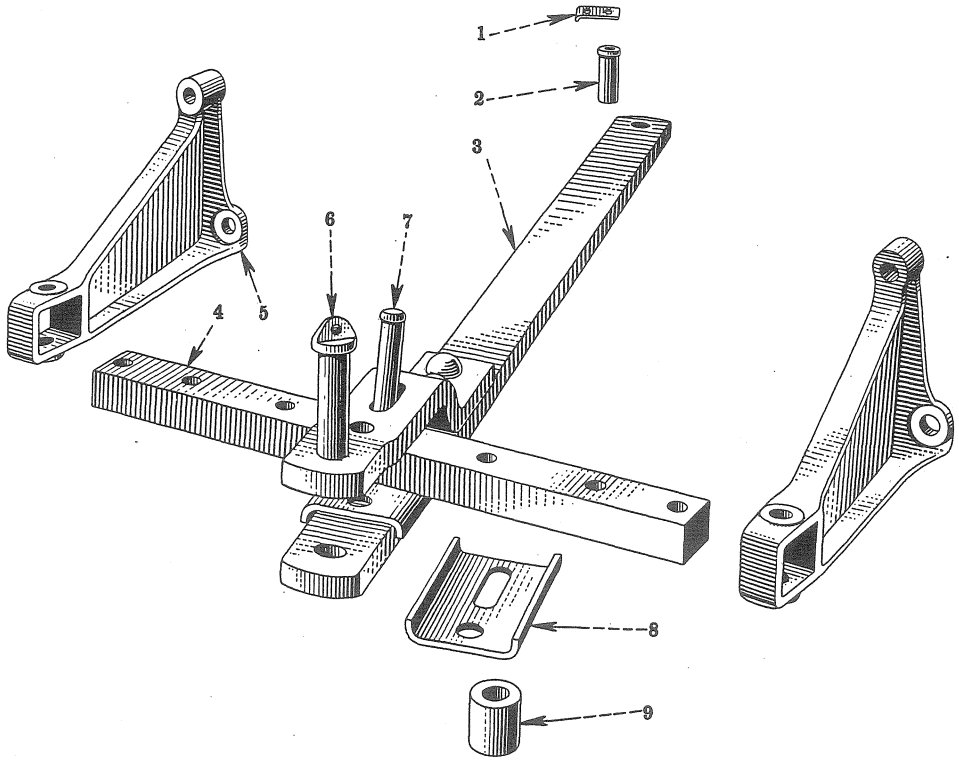

Reference numbers only are shown in illustration. Use I H C part numbers in ordering.
Unnumbered parts in the illustrations are the same as corresponding parts shown with numbers.

DRAWBAR

47772 D	1	Drawbar Pivot Pin Lock	1	
		Cap Screw, 3/8 x 1" N.F. Hex. Head	1	
		Lockwasher, 3/8"	1	
47771 D	2	Drawbar Pivot Pin	1	
53921 D	3	Drawbar	1	
		Steel Rivet, 1 x 4-3/8" Round Head	2	
47773 D	4	Drawbar Guide	1	
		Cap Screw, 7/8 x 4-1/2" N.F. Hex Head	2	
		Hex. Nut, 7/8" N.F.	2	
		Lockwasher, 7/8"	2	
52205 D	5	Drawbar Guide Bracket	2	
		Cap Screw, 3/4 x 3" N.C. Hex. Head TCB 501 to 986	6	
		Cap Screw, 3/4 x 1-3/4" N.C. Hex. Head TCB 501 to 986	6	
		Lockwasher, 3/4"	6	
47776 D	6	Drawbar Clevis Pin	1	
47775 D	7	Drawbar Stop Pin	1	
		Cotter Pin, 1/4 x 1-1/2"	1	
53925 D	8	Drawbar Clevis Wear Plate	2	
		Cap Screw, 1 x 6-1/4" N.F. Hex. Head	1	
		Hex. Nut, 1" N.F.	1	
		Lockwasher, 1"	1	
53924 D	9	Drawbar Jaw Spacer	1	

CHASSIS

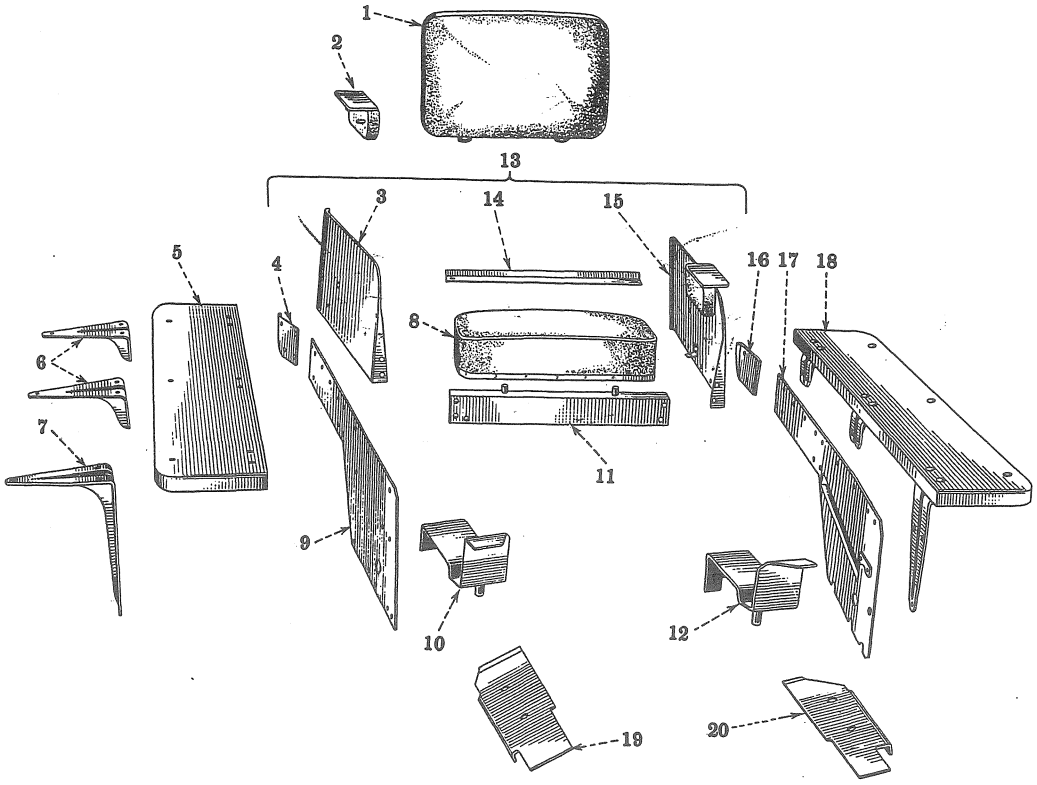

Reference numbers only are shown in illustration. Use I H C part numbers in ordering.
Unnumbered parts in the illustrations are the same as corresponding parts shown with numbers.

SEAT AND FENDERS

53731 D	1	Seat Cushion Back	1	
		Cap Screw, 3/8 x 3/4" N.C. Hex. Head	2	
		Lockwasher, 3/8"	2	
52390 D	2	Seat Cushion Side, Complete (not Lighting and Starting)		
		Carriage Bolt, 5/16 x 5/8" N.C.	4	
		Hex. Nut, 5/16" N.C.	4	
		Lockwasher, 5/16"	4	
53732 D	2	Seat Cushion Side, Complete (Electric Lighting and Starting - Special)	2	
		Carriage Bolt, 5/16 x 5/8" N.C.	4	
		Hex. Nut, 5/16" N. C.	4	
		Lockwasher, 5/16"	4	
53769 DX	3	Seat Side Sheet, R.H., Complete (Order 61264 D) (Not High Seat) TCB 501 to 3259	1	
		Carriage Bolt, 3/8 x 3/4" N.C.	1	
		Cap Screw, 3/8 x 3/4" N.F. Hex. Head	2	
		Cap Screw, 3/8 x 3/4" N.C. Hex. Head	1	
		Hex. Nut, 3/8" N.C.	1	
		Hex. Nut, 3/8" N.F.	2	
		Lockwasher, 3/8"	4	

CHASSIS

PART NUMBER	REF. NO.	DESCRIPTION	SERIAL NUMBER	NO. REQ'D
53769 DXA	3	Seat Side Sheet, R.H. with Support Angle Bracket		
		(Not High Seat)	TCB 3260 Up	1
		Carriage Bolt, 3/8 x 3/4" N.C.		1
		Cap Screw, 3/8 x 3/4" N.F. Hex. Head		2
		Cap Screw, 3/8 x 3/4" N.C. Hex. Head		1
		Hex. Nut, 3/8" N.C.		1
		Hex. Nut, 3/8" N.F.		2
		Lockwasher, 3/8"		4
54096 DXA	3	Seat Side Sheet, R.H. with Support Angle Bracket		
		(High Seat - Special)		1
		Cap Screw, 3/8 x 3/4" N.F. Hex. Head		2
		Cap Screw, 3/8 x 3/4" N.C. Hex. Head		2
		Hex. Nut, 3/8" N.F.		2
		Lockwasher, 3/8"		4
53757 D	4	Fender Side Sheet End Piece, R.H.		1
		Cap Screw, 3/8 x 3/4" N.C Hex. Head		1
		Cap Screw, 1/2 x 3/4" N.F. Hex. Head		1
		Hex. Nut, 1/2" N.F.		1
		Lockwasher, 3/8"		1
		Lockwasher, 1/2"		1
		Steel Washer, 13/32" I.D. x 7/8" O.D. x No. 16 Ga.		1
		Steel Washer, 17/32" I.D. x 1" O.D. x No. 14 Ga.		1
53753 D	5	Fender, R.H.		1
		Carriage Bolt, 3/8 x 5/8" N.C.		9
		Hex. Nut, 3/8" N.C.		9
		Lockwasher, 3/8"		9
53759 D	6	Fender Bracket, Center		2
		Cap Screw, 1/2 x 7/8" N.F. Hex. Head		4
		Hex. Nut, 1/2" N.F.		4
		Lockwasher, 1/2"		4
53759 D	6	Fender Bracket, Rear		2
		Cap Screw, 1/2 x 7/8" N.F. Hex. Head		2
		Cap Screw, 1/2 x 1" N.C. Hex. Head		2
		Hex. Nut, 1/2" N.F.		2
		Lockwasher, 1/2"		4
53760 D	7	Fender Bracket, Front		2
		Cap Screw, 3/8 x 5/8" N.F. Hex. Head		4
		Cap Screw, 1/2 x 1-1/8" N.C. Hex. Head		6
		Hex. Nut, 3/8" N.F.		4
		Lockwasher, 3/8"		4
		Lockwasher, 1/2"		6
53730 D	8	Seat Cushion Bottom		1
53755 DX	9	Fender Side Sheet, R.H. with Spacer		1
		Cap Screw, 3/8 x 5/8" N.C. Hex. Head		3
		Cap Screw, 3/8 x 3/4" N.F. Hex. Head		4
		Cap Screw, 1/2 x 3/4" N.C. Hex. Head		1
		Hex. Nut, 3/8" N.C.		4
		Lockwasher, 3/8"		7
		Lockwasher, 1/2"		1
		Steel Washer, 13/32" I.D. x 7/8" O.D. x No. 16 Ga.		7
		Steel Washer, 17/32" I.D. x 1" O.D. x No. 14 Ga.		1
56394 DX	10	Foot Rest, R.H. with Spacer, 1/2 x 2-5/8" (Not High Seat)		1
		Cap Screw, 1/2 x 3-1/2" N.C. Hex. Head		1
		Lockwasher, 1/2"		1

CHASSIS

PART NUMBER	REF. NO.	DESCRIPTION	SERIAL NUMBER	NO. REQ'D
56392 DX	11	Seat Support, Front with Guide (not High Seat)		1
		Cap Screw, 3/8 x 7/8" N.F. Hex. Head		4
		Hex. Nut, 3/8" N.F.		4
		Lockwasher, 3/8"		4
54097 DAX	11	Seat Support, Front, Complete with Guide		1
		Cap Screw, 3/8 x 7/8" N.F. Hex. Head		4
		Hex. Nut, 3/8" N.F.		4
		Lockwasher, 3/8"		4
56393 DX	12	Foot Rest, L.H. with Spacer, 1/2 x 2-5/8" (not High Seat)		1
		Cap Screw, 1/2 x 3-1/2" N.C. Hex. Head		1
		Lockwasher, 1/2"		1
61264 D	13	Seat Side Sheets, 53768 DAXA and 53769 DXA with Seat Support		
		Rear, 52201 DX (Will Work for 53768 DAX or 53769 DX)	TCB 501 to 3259	1
52201 DX	14	Seat Support, Rear with Guide	TCB 3260 Up	1
52201 DX	14	Seat Support, Rear with Guide (High Seat - Special)	TCB 501 to 3259	1
53879 D	14	Seat Support, Rear	TCB 501 to 3259	1
		Cap Screw, 3/8 x 3/4" N.F. Hex. Head		2
		Hex. Nut, 3/8" N.F.		2
		Lockwasher, 3/8"		2
53768 DAX	15	Seat Side Sheet, L.H., Complete (Order 61264 D) (not High Seat)	TCB 501 to 3259	1
		Cap Screw, 3/8 x 3/4" N.F. Hex. Head		2
		Cap Screw, 3/8 x 3/4" N.C. Hex. Head		1
		Hex. Nut, 3/8" N.F.		2
		Lockwasher, 3/8"		3
53768 DAXA	15	Seat Side Sheet, L.H. with Support Angle Bracket (not High Seat)	TCB 3260 Up	1
		Cap Screw, 3/8 x 3/4" N.F. Hex. Head		2
		Cap Screw, 3/8 x 3/4" N.C. Hex. Head		1
		Hex. Nut, 3/8" N.F.		2
		Lockwasher, 3/8"		3

CHASSIS

PART NUMBER	REF. NO.	DESCRIPTION	SERIAL NUMBER	NO. REQ'D
54095 DXA	15	SEAT SIDE SHEET, L.H. WITH SUPPORT ANGLE BRACKET		
		(HIGH SEAT - SPECIAL)		1
		CAP SCREW, 3/8 x 3/4" N.F. HEX. HEAD		2
		CAP SCREW, 3/8 x 3/4" N.C. HEX. HEAD		2
		HEX. NUT, 3/8" N.F.		2
		LOCKWASHER, 3/8"		4
53756 D	16	FENDER SIDE SHEET END PIECE, L.H.		1
		CAP SCREW, 3/8 x 3/4" N.C. HEX. HEAD		1
		CAP SCREW, 1/2 x 3/4" N.F. HEX. HEAD		1
		HEX. NUT, 1/2" N.F.		1
		LOCKWASHER, 3/8"		1
		LOCKWASHER, 1/2"		1
		STEEL WASHER, 13/32" I.D. x 7/8" O.D. x No. 16 GA.		1
		STEEL WASHER, 17/32" I.D. x 1" O.D. x No. 14 GA.		1
53754 DX	17	FENDER SIDE SHEET, L.H. WITH SPACER		1
		CAP SCREW, 3/8 x 5/8" N.C. HEX. HEAD		3
		CAP SCREW, 3/8 x 3/4" N.F. HEX. HEAD		4
		CAP SCREW, 1/2 x 3/4" N.C. HEX. HEAD		1
		HEX. NUT, 3/8" N.F.		4
		LOCKWASHER, 3/8"		7
		LOCKWASHER, 1/2"		1
		STEEL WASHER, 13/32" I.D. x 7/8" O.D. x No. 16 GA.		7
		STEEL WASHER, 17/32" I.D. x 1" O.D. x No. 14 GA.		1
53752 DA	18	FENDER, L.H.		1
		CARRIAGE BOLT, 3/8 x 5/8" N.C.		9
		HEX. NUT, 3/8" N.C.		9
		LOCKWASHER, 3/8"		9
54100 DX	19	FOOT REST, R.H. WITH GROMMET (HIGH SEAT - SPECIAL)		1
		CAP SCREW, 3/8 x 5/8" N.C. HEX. HEAD		1
		WELDING GROMMET, 3/8" N.C.		1
		LOCKWASHER, 3/8"		1
54099 DX	20	FOOT REST, L.H. WITH GROMMET (HIGH SEAT - SPECIAL)		1
		CAP SCREW, 3/8 x 1-1/4" N.C. HEX. HEAD		1
		WELDING GROMMET, 3/8" N.C.		1
		LOCKWASHER, 3/8"		1
54087 D		HIGH SEAT ATTACHMENT (SPECIAL)		
54098 DA		TOOL BOX SUPPORT (HIGH SEAT - SPECIAL)		2
68054 D		FENDER SIDE SHEET STIFFENER, L.H.		
		(*) USED ON MODIFIED UNITS BUCYRUS-ERIE NO. 30 AND 31)		1
251715 R91		HIGH SEAT ATTACHMENT (*) USED ON MODIFIED UNITS BUCYRUS-ERIE NO. 30 AND 31)		
		(SAME AS ATTACHMENT 54087 D EXCEPT USE 53732 D SEAT CUSHION SIDE INSTEAD OF		
		52390 D)		1
		(*) - FOR TABULATION OF MODIFICATIONS SEE INTRODUCTION PAGE		

(Revised 2-'4

CHASSIS

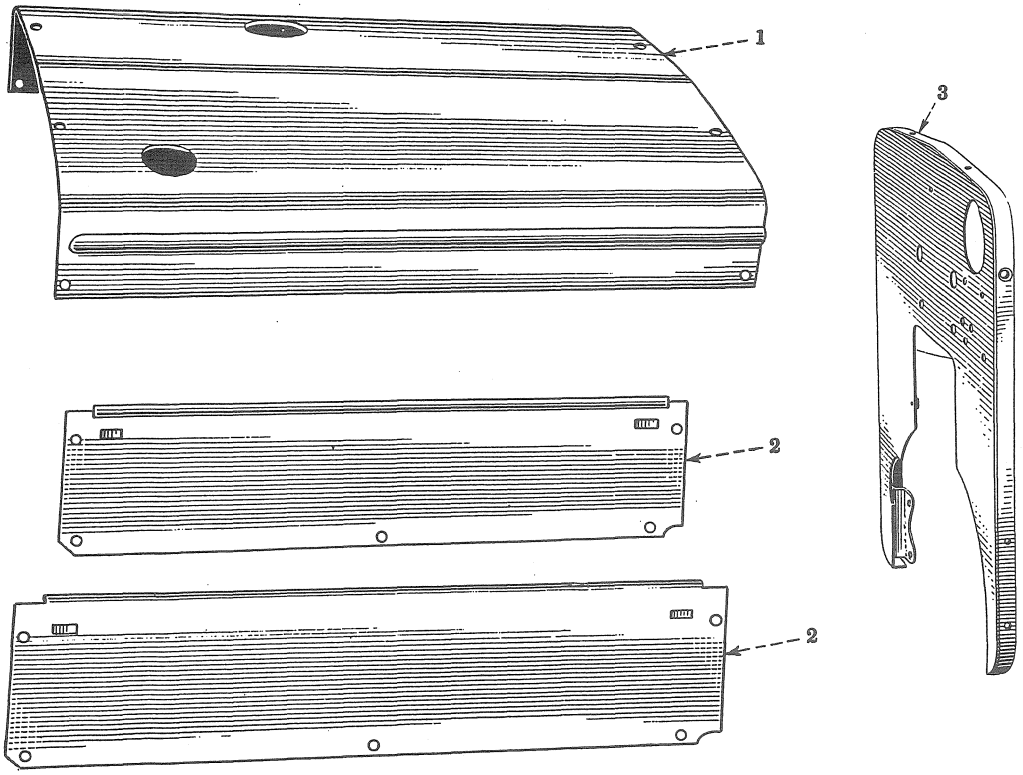

A-5870

Reference numbers only are shown in illustration. Use I H C part numbers in ordering.

HOOD AND SIDE SHEETS

53766 DAX	1	Hood Sheet, (TD 9)	1	
		Cap Screw, 3/8 x 3/4" N.C. Hex. Head	4	
		Slotted Bolt, 3/8 x 3/4" N.C. Flat Head	2	
		Slotted Bolt, 3/8 x 1-3/8" N.C. Flat Head	2	
		Hex. Nut, 3/8" N.C.	2	
		Lockwasher, 3/8"	6	
		Steel Washer, 13/32" I.D. x 7/8" O.D. x No. 16 Ga.	4	
53990 DAX	1	Hood Sheet, (T 9) (Kerosene or Distillate - Gasoline)	1	
		Cap Screw, 3/8 x 3/4" N.C. Hex. Head	4	
		Slotted Bolt, 3/8 x 3/4" N.C. Flat Head	2	
		Slotted Bolt, 3/8 x 1-3/8" N.C. Flat Head	2	
		Hex. Nut, 3/8" N.C.	2	
		Lockwasher, 3/8"	6	
		Steel Washer, 13/32" I.D. x 7/8" O.D. x No. 16 Ga.	4	
58322 DX	1	Hood Sheet, Complete (High Compression Gasoline)	1	
62442 D	1	Hood Sheet (⊛ Used on Modified Units Adams 70, 80 and 86)	1	
62469 D	1	Hood Sheet (⊛ Used on Modified Units Adams 75)	1	
51547 D	2	Engine Side Sheet	2	
		Cap Screw, 3/8 x 3/4" N.C. Hex. Head	10	
		Lockwasher, 3/8"	10	
67677 D	2	Engine Side Sheet, L.H. (⊛ Used on Modified Units Bucyrus-Erie No. 30 and 31)	1	
		Cap Screw 3/8 x 3/4" N.C. Hex Head	5	
		Lockwasher, 3/8"	5	
67683 D	2	Engine Side Sheet, R.H. (⊛ Used on Modified Units Bucyrus-Erie No. 30 and 31)	1	
		Cap Screw, 3/8 x 3/4" N.C. Hex Head	5	
		Lockwasher, 3/8"	5	
62441 DX	3	Hood Sheet, Rear (⊛ Used on Modified Units Adams 70, 80 and 86)	1	
62463 DX	3	Hood Sheet, Rear (⊛ Used on Modified Units Adams 75)	1	

(Revised 2-'46)

⊛ - For Tabulation of Modifications see Introduction Page

CHASSIS

PART NUMBER	REF. NO.	DESCRIPTION	SERIAL NUMBER	NO. REQ'D	
		TOOLS			
8244 D		Steering Clutch Compressor Tool		1	
9533 D		Open End Wrench, 2-1/4" (2584 T Will Work)		1	
11858 DA		Water Pump Wrench		1	
19289 D		Hexagon Socket Wrench, 9/16"		1	
19291 D		Hexagon Socket Wrench, 5/8"		1	
19292 D		Hexagon Socket Wrench, 3/4"		1	
19323 D		Socket Wrench Handle, Combination Offset and "T"		1	
19324 D		Hexagon Socket Wrench, 7/8"		1	
19325 D		Hexagon Socket Wrench, 13/16"		1	
19326 D		Hexagon Socket Wrench, 1"		1	
19327 D		Hexagon Socket Wrench, 1-1/8"		1	
19328 D		Socket Wrench Set Carrying Case		1	
19329 D		Socket Wrench Set and Carrying Case, Complete		1	
20156 D		Square Drain Plug Socket Wrench, 1/2"		1	
20157 D		Square Drain Plug Socket Wrench, 11/16"		1	
21438 DBX		Spark Plug and Breaker Point Gauge (TD 9)		1	
32941 D		Spark Plug Wrench (T 9)	TCB 3846 Up	1	
46190 DC		Spark Plug Wrench (TD 9)		1	
46190 DC		Spark Plug Wrench (T 9) (Order 32941 D)	TCB 501 to 3845)	1	
51915 DA		Tool Box (High Seat - Special)		1	
52276 D		Steering Clutch Compressor Bolt		2	
56395 D		Tool Box (not High Seat)		1	
57052 D		Spark Plug Wrench Handle (T 9)		1	
57052 D		Spark Plug Wrench Handle (TD 9)	TCB 501 to 2845	1	
65064 D		Spark Plug and Breaker Point Gauge (T 9)		1	
1326 E		End Wrench (3/4 and 7/8")		1	
H 156		Oil Can		1	
2583 T		Ball Peen Hammer (1-1/2 lb.)		1	
2584 T		Monkey Wrench (21") (4" Maximum Opening) (9533 D Will Work)		1	
2587 T		Combination Slip Joint Pliers, 8"		1	
2588 T		Screw Driver, 5" (Wood Handle)		1	

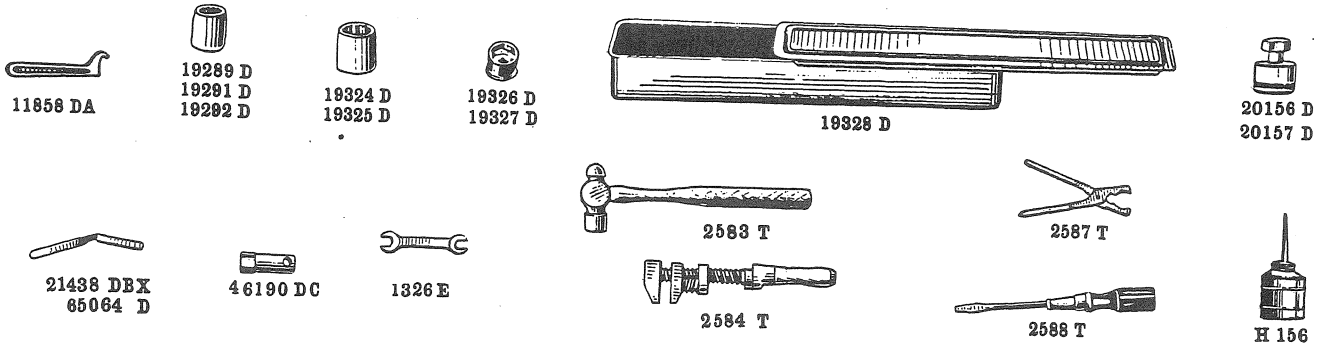

A-4409

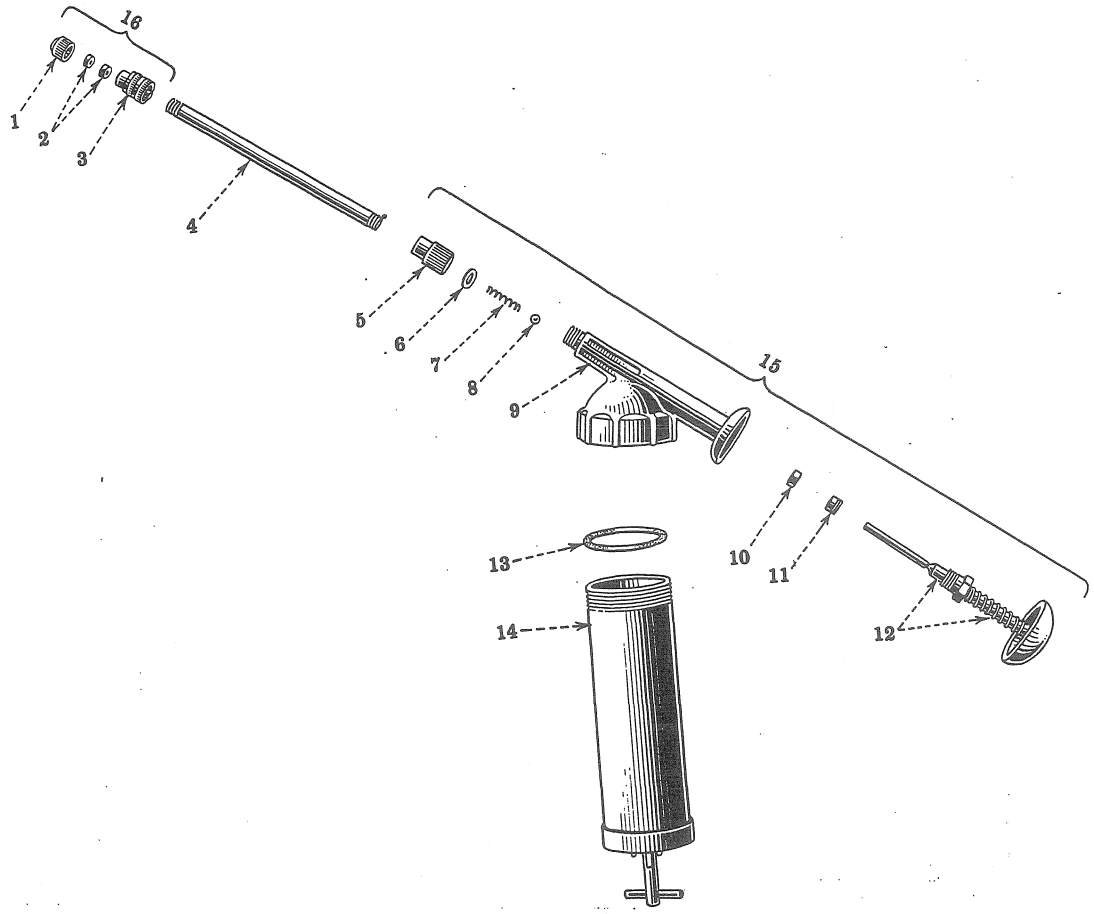

Reference numbers only are shown in illustration. Use I H C part numbers in ordering.

HAND LUBRICATOR (Lincoln Engineering Company)

Q 3794		1020	Hand Lubricator, 9 Ounces	1	
39653 D	1	10-733	Nozzle Cap	1	
39656 DX	2	34-050	Set of Two Linpack Washer	1	
39652 D	3	10-539	Nozzle Body	1	
1/8 x 6"	4	67-020	Pipe Nipple (TBE), Nozzle Extension	1	
39875 D	5	10-453	Nozzle Cap Adapter	1	
39655 D	6	33-018	Nozzle Cap Adapter Gasket	1	
39870 D	7	55-046	Pump Check Spring	1	
39659 D	8	66-011	Pump Check Ball, 7/32"	1	
39868 D	9	41-052	Pump Body Casting	1	
39665 D	10	34-034	Plunger Packing	1	
39651 D	11	10-492	Plunger Packing Screw	1	
39663 D	12	89-975	Plunger, Assembly	1	
39654 D	13	32-029	Container Gasket	1	
39661 D	14	81-903	Container Tube, Assembly	1	
39662 D	15	89-974	Head, Assembly	1	
39800 D	16	5804-1	Nozzle, Complete	1	

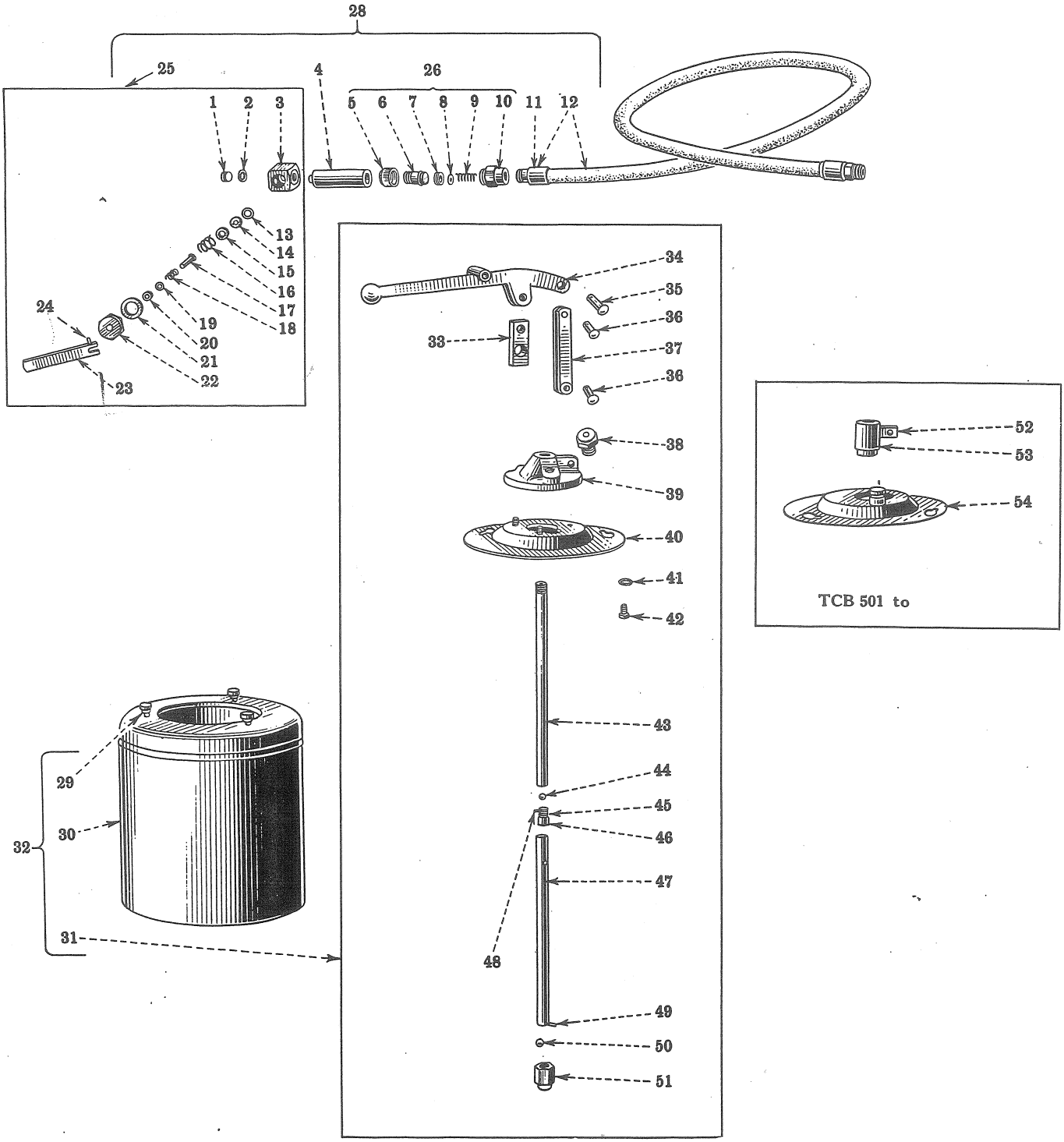

Reference numbers only are shown in illustration. Use I H C part numbers in ordering.

BUCKET LUBRICATOR (Lincoln Engineering Company)

51511 D		1261-1 H	Bucket Lubricator, Complete, 55481 D with Hose, 53210 D		
			(25 Lb. Capacity)	1	

CHASSIS

I H C PART NUMBER	REF. NO.	MFR'S. NUMBER	DESCRIPTION	SERIAL NUMBER	NO. REQ'D
40649 D	1	10-618	Bucket Lubricator Hose Coupler Nozzle Body Plug		1
40657 D	2	31-016	Bucket Lubricator Hose Coupler Plug Gasket		1
40648 D	3	10-617	Bucket Lubricator Hose Coupler Giant Nozzle Body		1
53187 D	4	11-137	Bucket Lubricator Hose Coupler Adapter		1
40642 D	5	10-534	Bucket Lubricator Hose Swivel Collar		1
40641 D	6	10-533	Bucket Lubricator Hose Swivel Stud		1
40631 D	7	36-019	Bucket Lubricator Hose Swivel Cup Leather		1
40703 D	8	48-080	Bucket Lubricator Hose Swivel Washer		1
40713 D	9	56-014	Bucket Lubricator Hose Coupler Swivel Spring		1
40646 D	10	10-541	Bucket Lubricator Hose Swivel Body		1
40725 D	11	80-356	Bucket Lubricator Hose Fitting		2
53207 D	12	79-036	Bucket Lubricator Hose with 2 Fittings, 40725 D (3 Ft.)		1
40693 D	13	45-033	Bucket Lubricator Hose Coupler Giant Packing Gasket		1
40661 D	14	34-037	Bucket Lubricator Hose Coupler Giant Packing		1
40636 D	15	10-450	Bucket Lubricator Hose Check Seat		1
40712 D	16	55-067	Bucket Lubricator Hose Coupler Check Seat Spring		1
40644 D	17	10-537	Bucket Lubricator Hose Coupler Plunger		1
40711 D	18	55-063	Bucket Lubricator Hose Coupler Plunger Spring		1
40700 D	19	48-077	Bucket Lubricator Hose Coupler Packing Washer		1
40628 D	20	34-039	Bucket Lubricator Hose Coupler Packing		1
40656 D	21	30-012	Bucket Lubricator Hose Coupler Gland Gasket		1
40640 D	22	10-528	Bucket Lubricator Hose Packing Gland		1
53196 D	23	11-138	Bucket Lubricator Hose Coupler Handle with Pin		1
40647 D	24	10-551	Bucket Lubricator Hose Coupler Plunger Pin		1
40728 DA	25	81-219-1 H	Bucket Lubricator Hose Giant Coupler, Complete		1
36947 D	26	80-353	Bucket Lubricator Hose Swivel		1
53210 D	28	81-243	Bucket Lubricator Hose, 53207 D, Complete with Swivel, 36947 D, Coupler, 40728 DA and Adapter, 53187 D		1

CHASSIS

I H C PART NUMBER	REF. NO.	MFR'S. NUMBER	DESCRIPTION	SERIAL NUMBER	NO. REQ'D
55479 D	29	11-225	Bucket Lubricator Container Cover Screw		3
53209 D	30	81-241	Bucket Lubricator Container, Complete		1
53208 D	31	81-240	Bucket Lubricator Pump, Complete		1
55481 D	32	1260-1 H	Bucket Lubricator Container, 53209 D with Pump,		
			53208 D (25 Lb. Capacity)		1
53202 D	33	11-551	Bucket Lubricator Pump Outlet		1
53204 D	34	40-214	Bucket Lubricator Pump Lever Handle	TCB 501 to	1
55482 D	34	40-214	Bucket Lubricator Pump Lever Handle	TCB Up	1
40635 D	35	10-326	Bucket Lubricator Pump Toggle Pin		1
		66-031	Cotter Pin, 1/32 x 1/2"		1
40638 D	36	10-472	Bucket Lubricator Pump Toggle Pin		2
		66-031	Cotter Pin, 3/32 x 1/2"		2
52123 D	37	45-604	Bucket Lubricator Pump Toggle		1
37290 D	38	5750	Bucket Lubricator Hose Giant Button Head Fitting	TCB Up	1
62158 D	39	40-228	Bucket Lubricator Pump Casting	TCB Up	1
62159 D	40	45-620	Bucket Lubricator Container Cover Plate	TCB Up	1
	42	50-037	Cap Screw, 1/4 x 7/16" N.C. Hex. Head		3
62159 DX	40		Bucket Lubricator Container Cover Plate, Complete		
			(Will Work for 53211 D, 53197 D,DA and		
			40634 D)	TCB 501 to	1
52745 V	41	66-170	Bucket Lubricator Container Cover Plate Screw Washer		
			(Shakeproof No. 1214)	TCB Up	3
53205 D	43	62-099	Bucket Lubricator Pump Piston Rod		1
39659 D	44	66-011	Bucket Lubricator Pump Check Ball, 7/32" Diameter		1
53198 D	45	11-172	Bucket Lubricator Pump Piston		1
53203 D	46	34-078	Bucket Lubricator Pump Piston Packing		1
53206 D	47	62-100	Bucket Lubricator Pump Tube		1
53200 D	48	11-174	Bucket Lubricator Pump Piston Pin		1
53201 D	49	11-175	Bucket Lubricator Pump Foot Valve Pin		1
H 5476	50	66-030	Bucket Lubricator Pump Check Ball, 7/16" Diameter		1
53199 D	51	11-173	Bucket Lubricator Pump Foot Valve Body		1
40634 D	52	10-131	Bucket Lubricator Container Toggle Support		
			(Order 62159 DX)	TCB 501 to	1
53197 DA	52	90-370	Bucket Lubricator Pump Toggle Support and Bushing		
			(Order 62159 DX)	TCB 501 to	1
53197 D	53	11-171	Bucket Lubricator Container Cover Bushing		
			(Order 62159 DX)	TCB to	
53211 D	54	90-291	Bucket Lubricator Container Cover Plate, Complete		
			(Order 62159 DX)	TCB 501 to	1

PACKAGE ASSORTED GASKETS

PART NUMBER	REF. NO.	DESCRIPTION				SERIAL NUMBER	NO. REQ'D
53853 D		CARBURETED ENGINE T-9 (DISTILLATE)					
		42 GASKETS AS FOLLOWS.					
		1 - 13841 D	1 - 46137 D	1 - 48493 D	1 - 52795 DD		
		1 - 20300 D	1 - 46700 D	1 - 49108 D	1 - 52799 D		
		1 - 21632 D	2 - 47696 D	2 - 51044 D	1 - 52800 D		
		1 - 21839 D	2 - 47697 D	1 - 51204 D	1 - 52808 D		
		1 - 24524 D	1 - 47698 D	1 - 51312 D	1 - 55780 DA		
		2 - 25093 DA	1 - 47955 D	2 - 51316 D	2 - 60570 D		
		1 - 45685 D		1 - 51775 D	1 - 66272 D		
		1 - 45984 D	1 - 48002 D	2 - 52755 DA	2 - 54909 H		
		1 - 45986 D	1 - 48489 D	1 - 52793 D			
57304 D		DIESEL ENGINE TD-9					
		69 GASKETS AS FOLLOWS.					
		1 - 13727 D	8 - 43002 D	2 - 47984 D	2 - 51316 D		
		1 - 13728 D	1 - 45984 D	1 - 48139 DA	1 - 51318 D		
		1 - 13839 D	1 - 45986 D	1 - 48143 D	1 - 51527 D		
		1 - 13841 D	1 - 46137 D	3 - 48311 D	2 - 51668 DA		
		1 - 20300 D	1 - 46583 D	2 - 51044 D	1 - 51775 D		
		1 - 21839 D	1 - 46700 D	1 - 51194 D	2 - 52520 D		
		2 - 25093 DA	2 - 47696 D	1 - 51204 D	1 - 53437 DC		
		12- 37148 D	1 - 47697 DB	1 - 51310 D	1 - 53459 DA		
		1 - 42733 D	1 - 47698 D	1 - 51312 D	1 - 55780 DA		
		4 - 42767 D	1 - 47955 D		1 - 59481 D		
57789 D		CHASSIS					
		48 GASKETS AS FOLLOWS.					
		1 - 11917 DC	2 - 46823 D	4 - 48229 D	2 - 53714 D		
		2 - 22383 D	2 - 46851 D	2 - 51661 D	2 - 54003 D		
		1 - 23977 DA	1 - 46913 D	3 - 51939 D	2 - 54004 D		
		1 - 42495 D	1 - 46916 D	1 - 52033 D	2 - 54009 D		
		1 - 43984 D	1 - 46918 D	1 - 52256 D	2 - 54012 D		
		2 - 46751 DA	1 - 48073 D	1 - 53486 D	4 - 54513 D		
		2 - 46799 DA	2 - 48164 D	2 - 53627 D			

OVERHAUL AND IMPROVEMENT PACKAGE

GENUINE HD PARTS

PART NUMBER	REF. NO.	DESCRIPTION	SERIAL NUMBER	NO. REQ'D	
		CARBURETED ENGINE			
53853 D		Engine Overhaul Gasket Package		1	
56254 D		Set of Four Cylinder Sleeves with Pistons, 56253 D (Standard)		1	
60147 DB		Set of Four Cylinder Sleeves with Pistons, 68784 D			
		(Kerosene or Distillate Gasoline, 5000 Ft. Altitude and			
		Gas or High Compression Gasoline, 8000 Ft. Altitude)		1	
60149 DB		Set of Four Cylinder Sleeves with Piston, 68788 D			
		(Kerosene or Distillate Gasoline, 8000 Ft. Altitude)		1	
60478 D		Crankcase Oil Pan with Magnetic Drain Plug; Complete		1	
60802 DB		Set of Four Cylinder Sleeves with Pistons, 68786 D			
		(Gas or High Compression Gasoline, 5000 Ft. Altitude)		1	
60947 D		Carburetor Drip Hole Filler Field Change Package		1	
		DIESEL ENGINE			
56624 DA		Set of Four Cylinder Sleeves with Pistons, 56623 DA		1	
57304 D		Engine Overhaul Gasket Package		1	
60218 D		Carburetor Drain Tube Field Change Package	TDCBM 501 to 2182	1	
64451 D		Set of Four Cylinder Sleeves with Pistons, 64452 D		1	
		FUEL INJECTION PUMP			
59905 D		Over Flow Pipe Field Change Package	TDCBM 501 to 1344	1	
60732 D		Bosch Type "A" Improvement Package, Improved Gasket Sealing,			
		Breather Action to Maintain Proper Oil Level and Eliminate			
		Slippage of Friction Clutch	TDCBM 501 to 2456	1	
61206 D		Injection, Nozzle Field Improvement Package	TDCBM 501 to 2565	1	
65374 D		Bosch Type "K" Injection Pump Field Change Package			
		(For Changing Over Type "A" Pumps)	TDCBM 501 to 3210	1	
69332 D		Fuel Supply Pump Replacement Package	TDCBM 501 to 3210	1	
		CHASSIS			
57789 D		Chassis Overhaul Gasket Package		1	
		STEERING CLUTCH			
59320 D		Steering Clutch Control Field Improvement Package	TCB 501 to 1833	1	

MEMORANDA

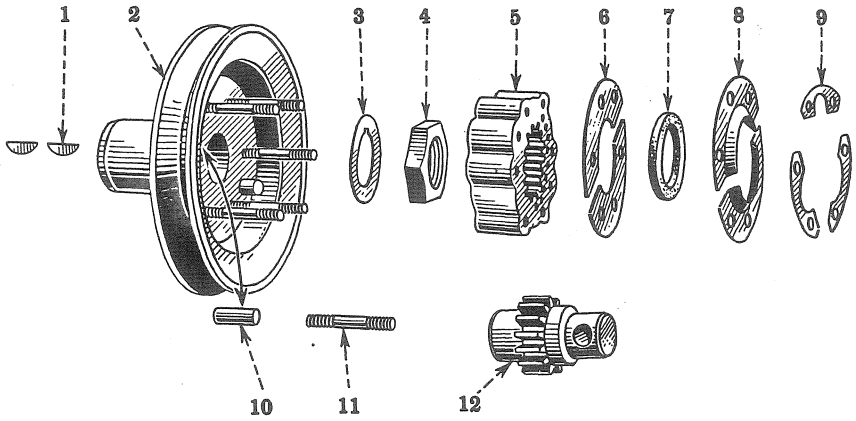

Reference numbers only are shown in illustration. Use I H C part numbers in ordering.
Unnumbered parts in the illustrations are the same as corresponding parts shown with numbers.

FRONT POWER TAKE-OFF COUPLING (Special)

53826 DA		Front Power Take-Off Coupling Attachment (TD-9) (Machine Attachment)		
		(⊛ Also Used on Modified Units Bucyrus-Erie No. 30)	1	
54116 DA		Front Power Take-Off Coupling Attachment (T-9) (Machine Attachment)		
		(⊛ Also Used on Modified Units Bucyrus-Erie No. 31)	1	
6565 DBX	2	Front Power Take-Off Fan Drive Pulley with 2 Pins, 47490 D and 6 Studs,		
		57714 D (TD-9)	1	
8527 DAX	2	Front Power Take-Off Fan Drive Pulley with 2 Pins, 47490 D and 6 Studs,		
		57714 D (Not Diesel)	1	
18767 D	3	Front Power Take-Off Fan Drive Pulley Nut Lock	1	
4253 D	4	Front Power Take-Off Fan Drive Pulley Nut (TD-9)	1	
54115 D	4	Front Power Take-Off Fan Drive Pulley Nut (T-9)	1	
8505 D	5	Front Power Take-Off Coupling, 14 Teeth	1	
51268 D	6	Front Power Take-Off Shaft Retainer	2	
51269 D	7	Front Power Take-Off Shaft Felt Washer	1	
51271 D	8	Front Power Take-Off Shaft Felt Washer Retainer	2	
47244 D	9	Front Power Take-Off Coupling Stud Nut Lock	3	
47490 D	10	Front Power Take-Off Drive Pin	2	
53815 D	11	Front Power Take-Off Coupling Stud — TCB 501 to 2438	6	
		Hex. Nut, 3/8" N.F.	6	
57714 D	11	Front Power Take-Off Coupling Stud — TCB 2439 Up	6	
		Hex. Nut, 3/8" N.C.	6	
56698 D	12	Front Power Take-Off Starting Crank Adapter (T-9)	1	
		⊛ - For Tabulation of Modifications see Introduction Page		

(Revised 2-'46)

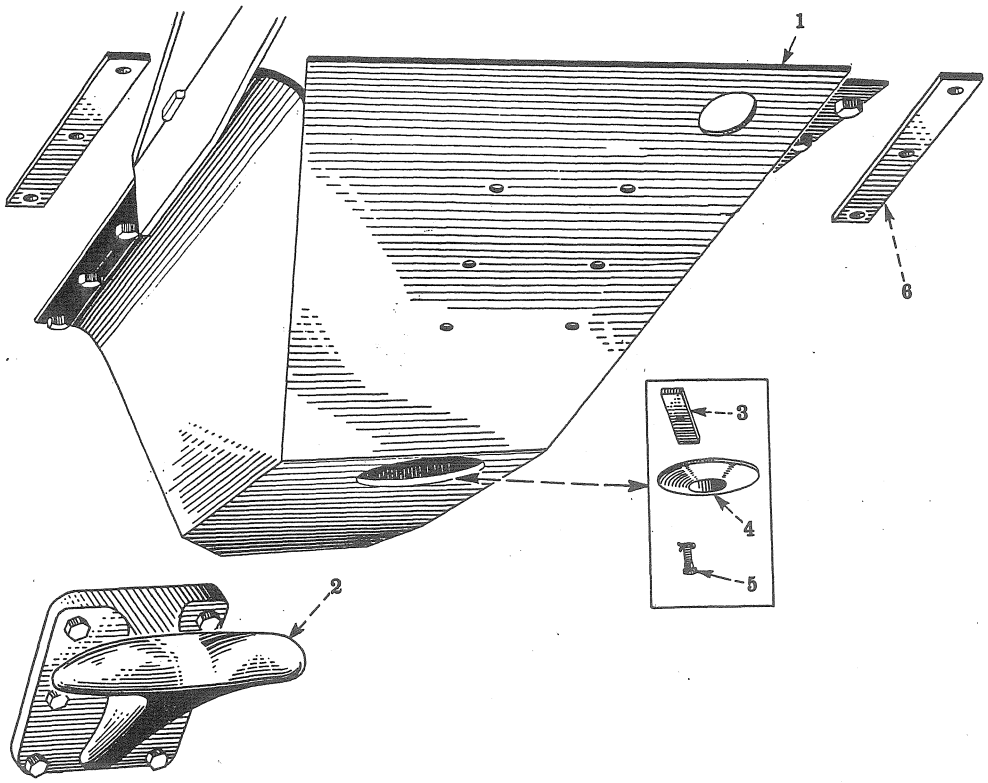

Reference numbers only are shown in illustration. Use I H C part numbers in ordering.
Unnumbered parts in the illustrations are the same as corresponding parts shown with numbers.

CRANKCASE GUARD AND FRONT PULL HOOK (Special)

54038 D		Crankcase Guard Attachment (Machine Attachment)		
		(⊛ Also Used on Modified Units Bucyrus-Erie No. 30 and 31)		
54037 D	1	Crankcase Guard	1	
		Cap Screw, 5/8 x 1-3/8" N.F. Hex. Head	8	
		Cap Screw, 5/8 x 1-7/8" N.F. Hex. Head	6	
		Hex. Nut, 5/8" N.F.	14	
		Lockwasher, 5/8"	14	
5961 DX	2	Front Pull Hook Attachment (Machine Attachment)(For Tractors Equipped		
		with Crankcase Guard)	1	
		Cap Screw, 5/8 x 2" N.F. Hex. Head	6	
		Hex. Nut, 5/8" N.F.	6	
		Lockwasher, 5/8"	6	
42877 D	3	Crankcase Guard Hand Hole Cover Support	1	
5977 D	4	Crankcase Guard Hand Hole Cover	1	
42879 D	5	Crankcase Guard Hand Hole Cover Bolt, 1/2 x 1-1/2" N.F.	1	
		Cotter Pin, 1/8 x 3/4"	1	
48764 D	6	Crankcase Guard Spacer	2	
		⊛ - For Tabulation of Modifications see Introduction Page		

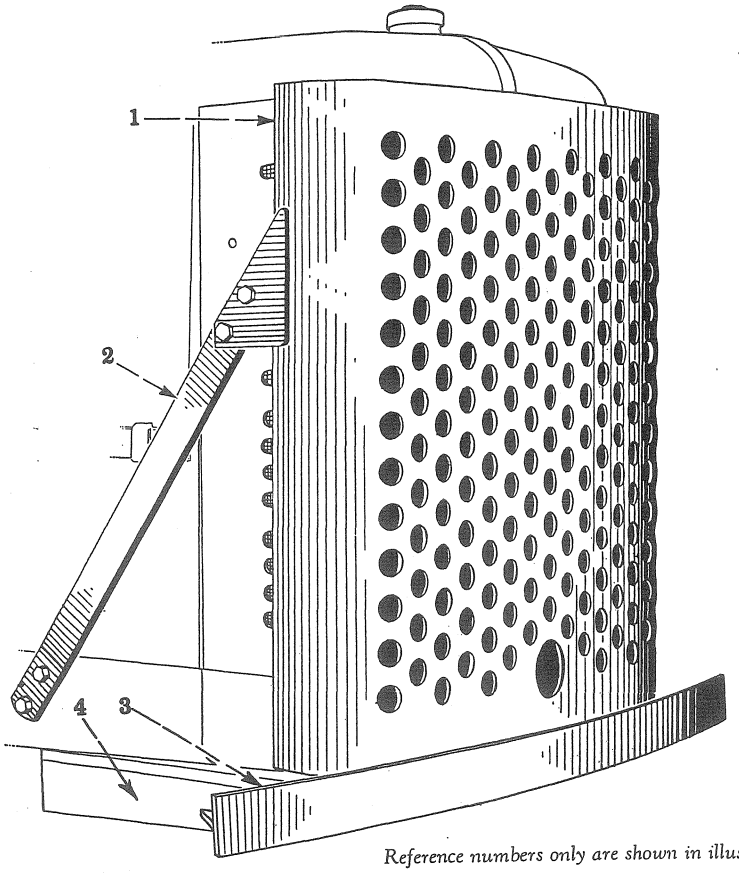

Reference numbers only are shown in illustration. Use I H C part numbers in ordering.

FRONT BUMPER AND RADIATOR GUARD (Special)

53949 D		Front Bumper Attachment (Machine Attachment)	1	
53950 DA		Radiator Guard Attachment (Machine Attachment)	1	
53951 D		Radiator Guard and Front Bumper Attachment (Machine Attachment)		
53948 DAX	1	Radiator Guard	1	
		Cap Screw, 1/2 x 1-1/2" N.F. Hex. Head	4	
		Lockwasher, 1/2"	4	
48739 DX	2	Radiator Guard Brace and Spacer	2	
		Cap Screw, 1/2 x 1-1/2" N.F. Hex. Head	4	
		Cap Screw, 1/2 x 1-3/4" N.F. Hex. Head	4	
		Hex. Nut, 1/2" N.F.	8	
		Lockwasher, 1/2"	8	
53952 D	3	Front Bumper	1	
		Cap Screw, 5/8 x 1-5/8" N.F. Hex. Head	6	
		Hex. Nut, 5/8" N.F.	6	
		Lockwasher, 5/8"	6	
53942 D	4	Radiator Guard Support Bracket, L.H.	1	
		Cap Screw, 5/8 x 1-1/4" N.F. Hex. Head	3	
		Hex. Nut, 5/8" N.F.	3	
		Lockwasher, 5/8"	3	
53943 D	4	Radiator Guard Support Bracket, R.H.	1	
		Cap Screw, 5/8 x 1-1/4" N.F. Hex. Head	3	
		Hex. Nut, 5/8" N.F.	3	
		Lockwasher, 5/8"	3	

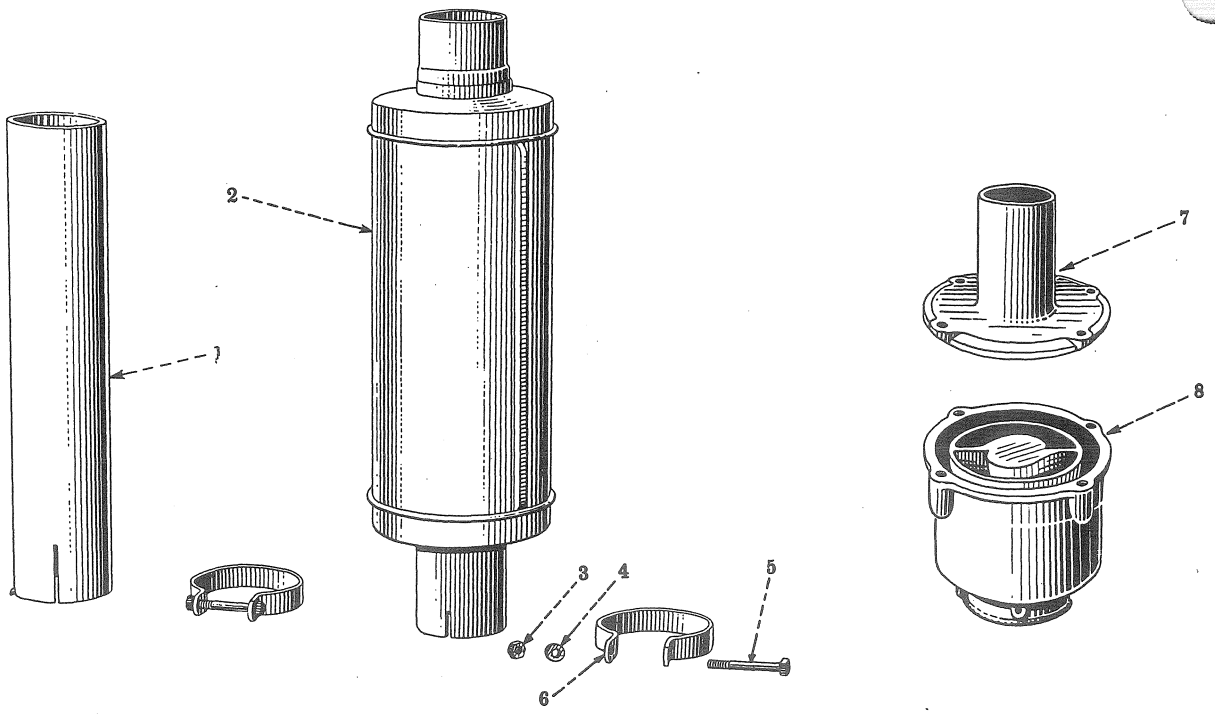

Reference numbers only are shown in illustration. Use I H C part numbers in ordering.
Unnumbered parts in the illustrations are the same as corresponding parts shown with numbers.

EXHAUST MUFFLER, SPARK ARRESTER AND EXHAUST EXTENSION (Special)

50918 D		Exhaust Muffler Attachment		
54127 D		Exhaust Extension Attachment (T-9)		
56064 D		Spark Arrester Attachment		
52254 D	1	Exhaust Pipe Extension	1	
50917 D	2	Exhaust Muffler	1	
23132 D	6	Exhaust Pipe Extension Clamp	1	
	5	Cap Screw, 5/16 x 2-1/4" N.C. Hex Head	1	
	3	Hex Nut, 5/16" N.C.	1	
	4	Lockwasher, 5/16"	1	
23132 D	6	Exhaust Muffler Clamp	1	
	5	Cap Screw, 5/16 x 2-1/4" N.C. Hex Head	1	
	3	Hex Nut, 5/16" N.C.	1	
	4	Lockwasher, 5/16"	1	
8715 D	7	Spark Arrester Top	1	
		Cap Screw, 3/8 x 1-3/8" N.C. Hex Head	4	
		Lockwasher, 3/8"	4	
8714 D	8	Spark Arrester Body	1	
		Set Screw, 3/8 x 3/4" Square Head Cup Point	2	
		Hex Jam Nut, 3/8" N.C.	2	

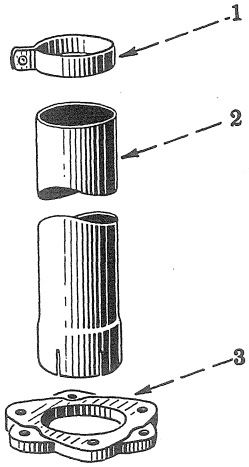

Reference numbers only are shown in illustration. Use I H C part numbers in ordering.

AIR CLEANER PIPE EXTENSION (Special)

58455 D		AIR PIPE EXTENSION ATTACHMENT		
31790 DA	1	AIR PIPE EXTENSION CLAMP (WILL WORK FOR 51952 D)	1	
		CAP SCREW, 3/8 x 1-3/4" N.C. HEX HEAD	1	
		HEX NUT, 3/8" N.C.	1	
		LOCKWASHER, 3/8"	1	
51952 D	1	AIR PIPE EXTENSION CLAMP (ORDER 31790 DA)	1	
		CAP SCREW, 5/16 x 1-3/4" N.C. HEX HEAD	1	
		HEX NUT, 5/16" N.C.	1	
		LOCKWASHER, 5/16"	1	
58453 D	2	AIR PIPE EXTENSION	1	
8860 D	3	AIR PIPE ADAPTER	1	
		CAP SCREW, 3/8 x 1-1/8" N.C. HEX HEAD	3	
		LOCKWASHER, 3/8"	3	

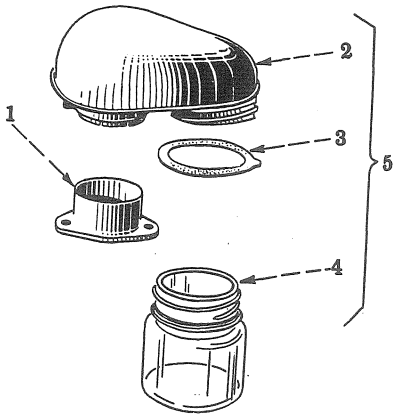

Reference numbers only are shown in illustration. Use I H C part numbers in ordering.

PRE-CLEANER (Special)

59330 D			PRE-CLEANER (COLLECTOR TYPE) ATTACHMENT		
59326 D	1		PRE-CLEANER FLANGE	1	
			CAP SCREW, 3/8 x 3/4" N.C. HEX. HEAD	3	
			LOCKWASHER, 3/8"	3	
59421 D	2	X-1593	COLLECTOR PRE-CLEANER	1	
54081 D	3	P-2775	GASKET (ORDER 66776 D)	1	
66776 D	3	P-3995	GASKET (WILL WORK FOR 54081 D)	1	
54082 D	4	P-2776	DUST JAR	1	
59322 D	5		PRE-CLEANER (COLLECTOR TYPE)	1	

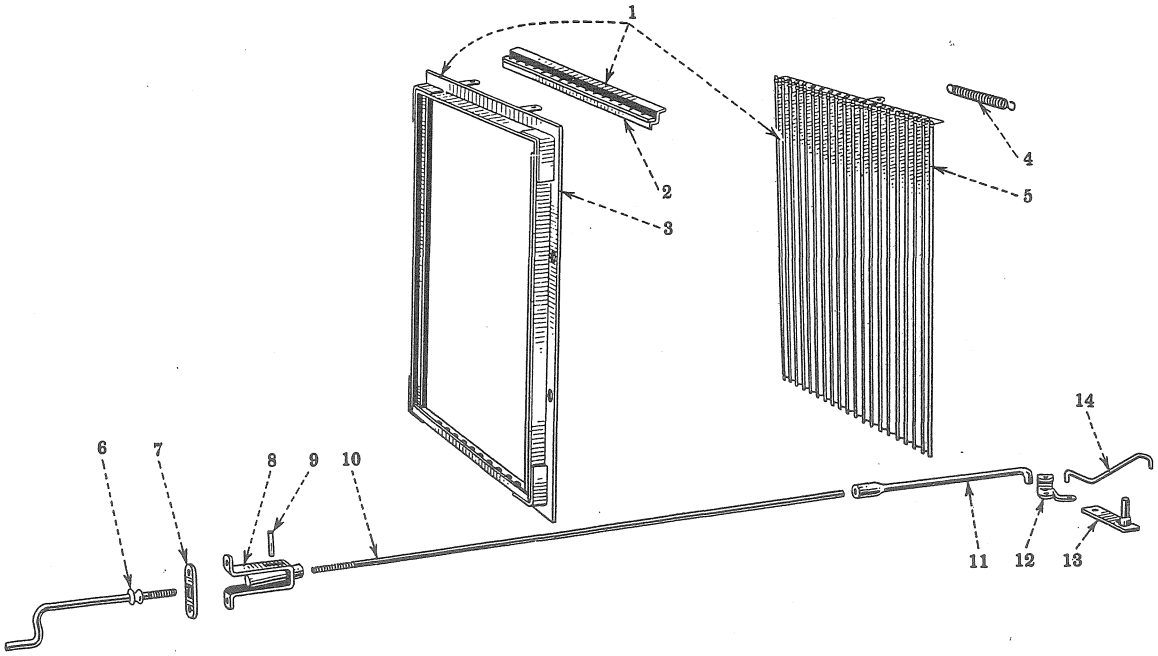

Reference numbers only are shown in illustration. Use I H C part numbers in ordering.

RADIATOR SHUTTER AND CONTROLS—TD9 Diesel (Special)
T9 (Standard Equipment) (not Gasoline)

53940 D			Radiator Shutter Attachment		
48671 D	1	16910	Radiator Shutter (Hardy Mfg. Corp.), Complete	1	
			Cap Screw, 5/16" x 5/8" N.C. Hex Head	8	
			Lockwasher, 5/16"	8	
			Steel Washer, 11/32" I.D. x 3/4" O.D. x No. 16 Ga.	4	
56127 D	2	16948	Bearing Carrier, Complete	1	
			Screw, No. 10 - 32 x 3/8" Round Head	5	
			Hex Nut, No. 10 - 32 N.F.	5	
			Lockwasher, No. 10	5	
56126 D	3	16946	Frame and Bearing Bar, Complete	1	
47530 D	4	15549	Bell Crank and Operating Link Spring	1	
56125 D	5	16944	Shutter and Operating Bar, Complete	1	
56128 D	5	16949	Shutter Unit, Complete	1	
52445 D	6		Radiator Shutter Control Crank with Handle	1	
50763 DA	7		Radiator Shutter Control Crank Spacer	1	
50760 D	8		Radiator Shutter Control Crank Bracket with Collar and Pin	1	
			Carriage Bolt, 1/4 x 3/4" N.C.	2	
			Hex Nut, 1/4" N.C.	2	
			Lockwasher, 1/4"	2	
50767 D	9		Radiator Shutter Control Crank Collar Pin	1	
53939 D	10		Radiator Shutter Control Rod, Rear	1	
			Hex Nut, 3/8" N.C.	1	
50765 DX	11		Radiator Shutter Control Rod, Front with Coupling	1	
			Cotter Pin, 1/8 x 1"	1	
51745 D	12		Radiator Shutter Bell Crank	1	
47310 DX	13		Radiator Shutter Bell Crank Support with Pivot Pin and Welding Nuts	1	
			Cotter Pin, 1/8 x 3/4"	1	
47309 D	14		Radiator Shutter Operating Rod	1	
			Cotter Pin, 3/32 x 3/4"	2	

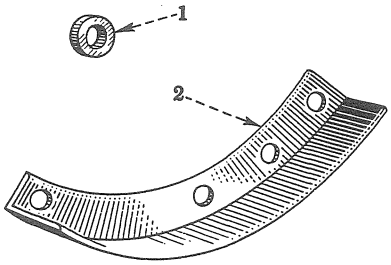

Reference numbers only are shown in illustration. Use I H C part numbers in ordering.

SPROCKET DRIVE GEAR HOUSING OUTER CAP SCREW GUARD (Special)

63226 D		Sprocket Drive Gear Housing, Outer, Cap Screw Guard Attachment		
		(Not Tractors Equipped with Sprocket Rockshields)	1	
63227 D		Sprocket Drive Gear Housing, Outer, Cap Screw Guard Attachment		
		(For Tractors Equipped with Sprocket Rockshields)	1	
G 9053	1	Sprocket Drive Gear Housing Cap Screw Guard Spacer		
		(For Tractors Equipped with Sprocket Rock Shield)	6	
63225 D	2	Sprocket Drive Gear Housing Cap Screw Guard	6	
		Cap Screw, 1/2 x 1-7/8" N.C. Hex. Head } For Tractors Equipped with	6	
		Cap Screw, 1/2 x 2-1/4" N.C. Hex. Head } Sprocket Rock Shields	12	
		Cap Screw, 1/2 x 3" N.C. Hex. Head (Not for Tractors Equipped with		
		Sprocket Rock Shields)	18	
		Lockwasher, 1/2"	18	

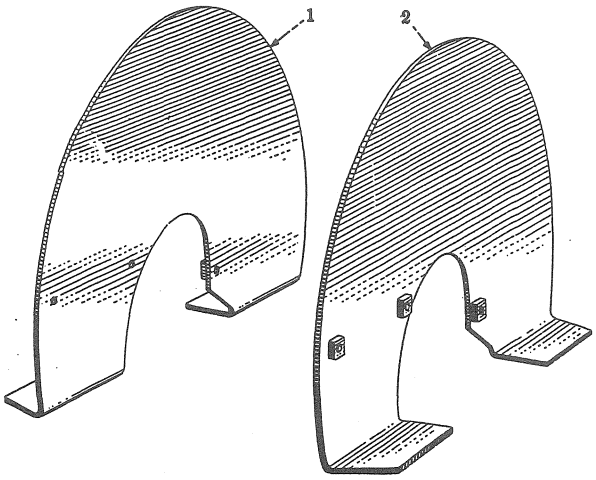

Reference numbers only are shown in illustration. Use I H C part numbers in ordering.

FRONT IDLER SHIELD (Special)

53980 D		Front Idler Shield Attachment	1	
		(⊛ Also Used on Modified Units Bucyrus-Erie No. 30 and 31)	1	
53978 DX	1	Front Idler Shield, L.H., Outer with Grommets	1	
		Cap Screw, 7/16 x 1-1/2" N.F. Hex. Head	3	
		Lockwasher, 7/16"	3	
53978 DX	1	Front Idler Shield, R.H., Inner with Grommets	1	
		Cap Screw, 7/16 x 1-1/2" N.F. Hex. Head	3	
		Lockwasher, 7/16"	3	
53979 DX	2	Front Idler Shield, R.H., Outer with Grommets	1	
		Cap Screw, 7/16 x 1-1/2" N.F. Hex. Head	3	
		Lockwasher, 7/16"	3	
53979 DX	2	Front Idler Shield, L.H., Inner with Grommets	1	
		Cap Screw, 7/16 x 1-1/2" N.F. Hex. Head	3	
		Lockwasher, 7/16"	3	

⊛ - For Tabulation of Modifications see Introduction Page

PRINTED IN UNITED STATES OF AMERICA

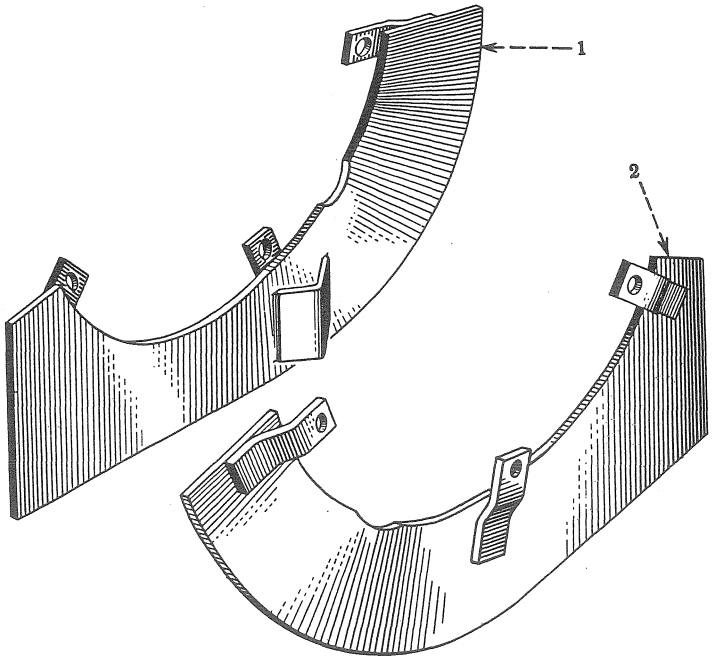

Reference numbers only are shown in illustration. Use I H C part numbers in ordering.

SPROCKET ROCK DEFLECTOR (Special)

54092 D		SPROCKET ROCK DEFLECTOR ATTACHMENT	1	
54089 DX	1	SPROCKET ROCK DEFLECTOR WITH SCRAPER AND BRACKETS, L.H.	1	
		CAP SCREW, 1/2 x 3" N.C. HEX. HEAD	3	
		LOCKWASHER, 1/2"	3	
54090 DX	2	SPROCKET ROCK DEFLECTOR WITH SCRAPER AND BRACKETS, R.H.	1	
		CAP SCREW, 1/2 x 3" N.C. HEX. HEAD	3	
		LOCKWASHER, 1/2"	3	

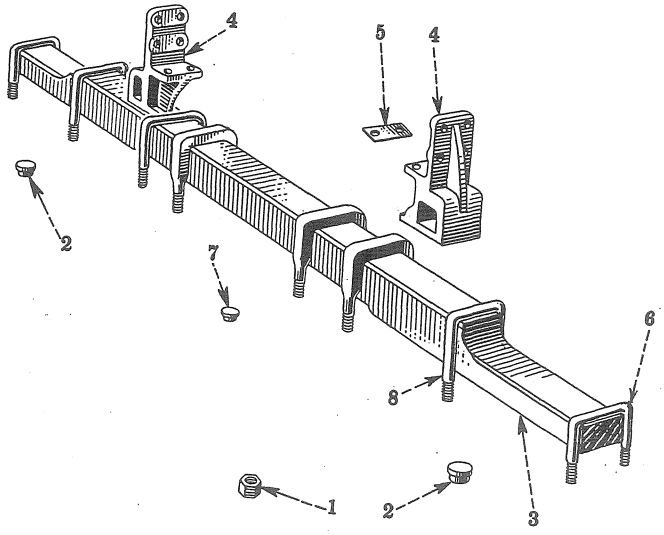

Reference numbers only are shown in illustration. Use I H C part numbers in ordering.
Unnumbered parts in the illustrations are the same as corresponding parts shown with numbers.

RIGID TRACK FRAME (Wide Tread—Special)

59528 D		Rigid Track Frame Attachment		
41842 D	1	Rigid Track Frame Cross Bar "U" Bolt Nut	8	
59523 D	2	Rigid Track Frame Cross Bar End Button	2	
59520 DX	3	Rigid Track Frame Cross Bar with Pad	1	
8961 D	4	Rigid Track Frame Cross Bar Bracket	2	
59526 D	5	Rigid Track Frame Cross Bar Bracket Shim, Heavy	2	
59527 D	5	Rigid Track Frame Cross Bar Bracket Shim, Light	4	
59525 D	6	Rigid Track Frame Cross Bar "U" Bolt, Short (Not Extended Track Frame)	2	
59522 D	7	Rigid Track Frame Cross Bar Center Button	1	
59524 D	8	Rigid Track Frame Cross Bar "U" Bolt, Long (Not Extended Track Frame)	2	

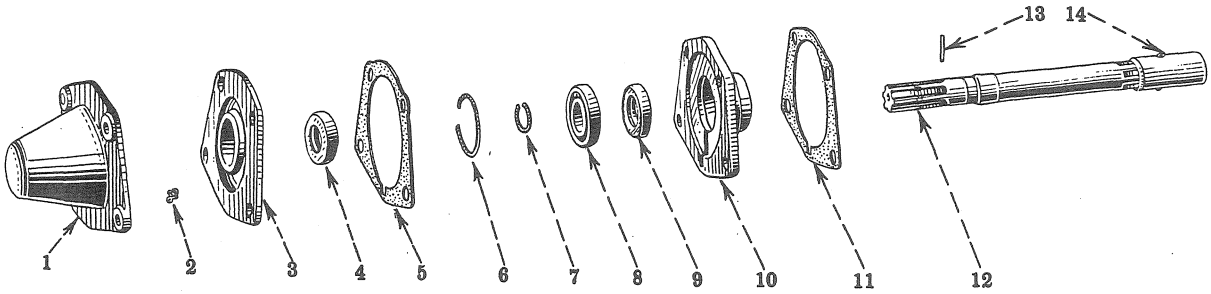

Reference numbers only are shown in illustration. Use I H C part numbers in ordering.

POWER TAKE-OFF, REAR ALSO BELT PULLEY DRIVE SHAFT* (Special)

53962 DA		Power Take-Off Attachment (Machine Attachment)	1	
6843 D	1	Power Take-Off Shaft End Cover (Not Belt Pulley)	1	
		Cap Screw, 5/8 x 2" N.C. Hex. Head	4	
		Lockwasher, 5/8"	4	
Q 3615	2	Power Take-Off Shaft Bearing Lubricator	1	
8391 DX	3	Power Take-Off Shaft Bearing Oil Seal Cage with Oil Seal, 53967 D	1	
		Cap Screw, 3/8 x 7/8" N.C. Hex. Head	4	
		Lockwasher, 3/8"	4	
53967 D	4	Power Take-Off Shaft Bearing Oil Seal, Outer	1	
49547 DA	5	Power Take-Off Shaft Bearing Cage Gasket	1	
48514 D	6	Power Take-Off Shaft Bearing Retaining Snap Ring, Outer	1	
48512 D	7	Power Take-Off Shaft Bearing Retaining Snap Ring, Inner	1	
20308 D	8	Power Take-Off Shaft Bearing (N.D. 3207)(St 205 A Will Work)	1	
ST 205 A	8	Power Take-Off Shaft Bearing (IHC)(Will Work for 20308 D)	1	
53968 D	9	Power Take-Off Shaft Bearing Oil Seal, Inner	1	
8392 DAX	10	Power Take-Off Shaft Bearing Cage with Oil Seal, 53968 D	1	
49547 DA	11	Power Shaft Bearing Oil Seal Gage Gasket	1	
53966 DAX	12	Power Take-Off Shaft, Complete	1	
21249 D	13	Power Take-Off Shaft Groov Pin TCB 501 to 3519	1	
49548 D	14	Power Take-Off Shaft Coupling	1	
		Steel Rivet, 5/16 x 2-5/8" Round Head	1	

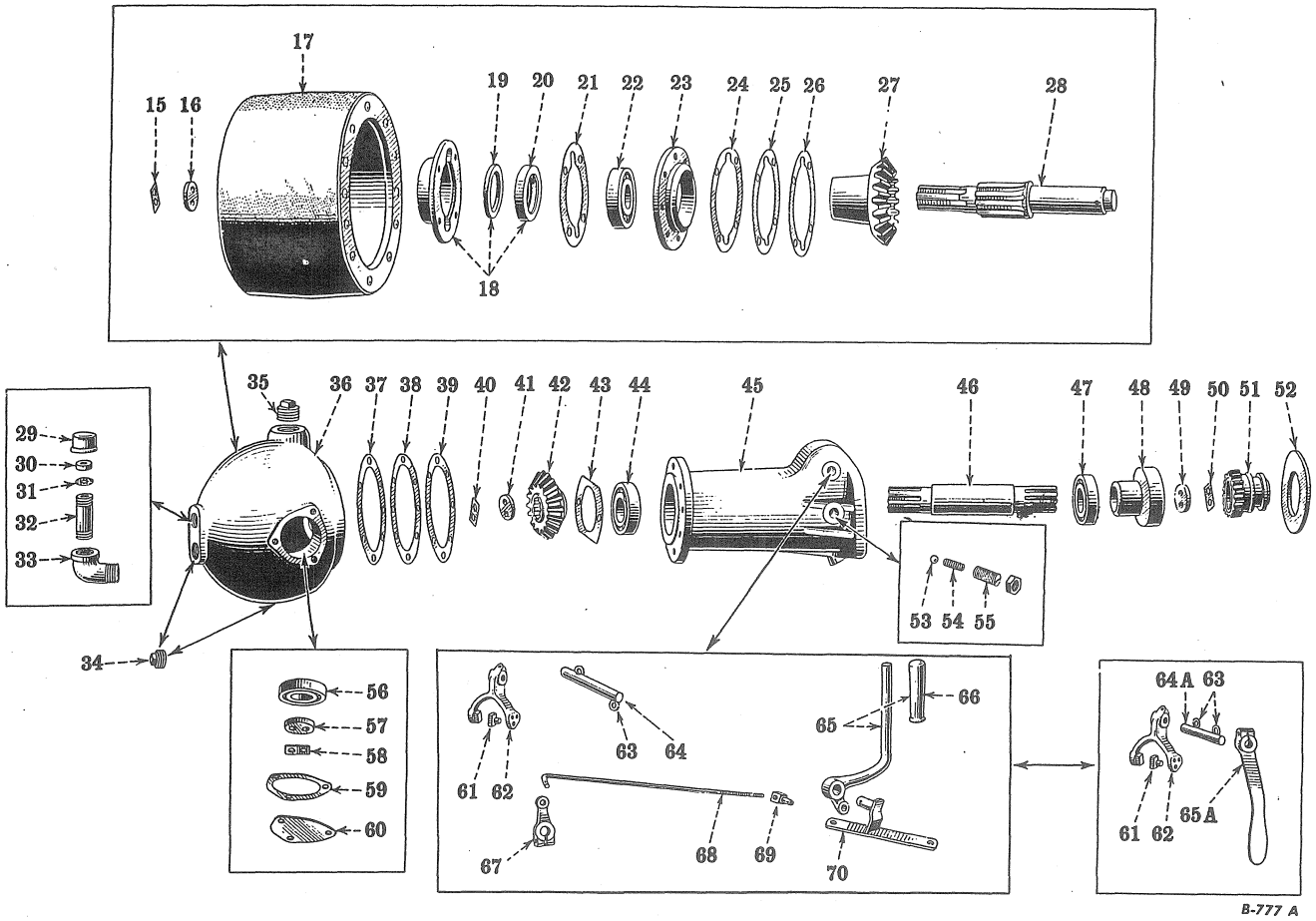

TCB 501 to 4159

BELT PULLEY (Special)

Reference numbers only are shown in illustration. [illegible] H C part numbers in ordering.
Unnumbered parts in the illustrations are the same as [illegible]ponding parts shown with numbers.

PART NUMBER	REF. NO.	DESCRIPTION	SERIAL NUMBER	NO. REQ'D
		BELT PULLEY (Special)		
53963 DA		Belt Pulley Attachment (With Power Take-Off Shaft)(Machine Attachment)		
		(Tractors not Equipped with Power Take-Off)		1
53964 DA		Belt Pulley Attachment (Less Power Take-Off Shaft)(Machine Attachment)		
		(Tractors Equipped with Power Take-Off)		1
14186 DA	2	Power Shaft Bearing Lubricator (Q 3615 Will Work)		1
Q 3615	2	Power Shaft Bearing Lubricator (14186 DA Will Work)		1
8391 DX	3	Power Shaft Bearing Oil Seal Cage with Oil Seal, 53967 D		1
		Cap Screw, 3/8 x 7/8" N.C. Hex. Head		4
		Lockwasher, 3/8"		4
53967 D	4	Power Shaft Bearing Oil Seal, Outer		1
49547 DA	5	Belt Pulley Carrier Gasket		1
48514 D	6	Power Shaft Bearing Retaining Snap Ring, Outer		1
48512 D	7	Power Shaft Bearing Retaining Snap Ring, Inner		1
20308 D	8	Power Shaft Bearing (N.D. 3207)(ST 205 A Will Work)		1
ST 205 A	8	Power Shaft Bearing (IHC)(Will Work for 20308 D)		1
53968 D	9	Power Shaft Bearing Oil Seal, Inner		1
8392 DAX	10	Power Shaft Bearing Cage with Oil Seal, 53968 D		1
49547 DA	11	Power Shaft Bearing Cage Gasket		1
53966 DAX	12	Power Shaft, Complete		1
49548 D	14	Power Shaft Coupling		1
		Steel Rivet, 5/16 x 2-3/8" Round Head		1
	2-14	Are Illustrated on Page 199		
45558 DA	15	Belt Pulley Retaining Washer Bolt Lock		1
49178 DA	16	Belt Pulley Retaining Washer		1
		Cap Screw, 3/8 x 1" N.C. Hex. Head		2
49558 DA	17	Belt Pulley (11" Diameter x 8-1/2" Face)		1
53254 DA	17	Belt Pulley (12-1/2" Diameter x 8-1/2" Face)		1
62313 D	17	Belt Pulley (9-1/2" Diameter x 8-1/2" Face)		1
62314 D	17	Belt Pulley (13-3/4" Diameter x 8-1/2" Face)		1
62315 D	17	Belt Pulley (14-3/4" Diameter x 8-1/2" Face)		
		(For Tractors Equipped with High Seat)		1
6679 DX	18	Belt Pulley Oil Seal Retainer with Felt Washer, 48524 D and Oil Seal,		
		53970 D		1
		Cap Screw, 3/8 x 1-3/8" N.C. Hex. Head		4
		Lockwasher, 3/8"		4
48524 D	19	Belt Pulley Oil Seal Felt Washer		1
53970 D	20	Belt Pulley Oil Seal		1
48526 D	21	Belt Pulley Oil Seal Retainer Gasket		1
14226 H	22	Belt Pulley Bearing (N.D. 1308)(ST 206 Will Work)		1
ST 206	22	Belt Pulley Bearing (IHC)(Will Work for 14226 H)		1
6682 D	23	Belt Pulley Bearing Cage		1
48521 D	24	Belt Pulley Bearing Cage Shim, Heavy		1
48522 D	25	Belt Pulley Bearing Cage Shim, Medium		1
48523 D	26	Belt Pulley Bearing Cage Shim, Light		X
53251 D	27	Belt Pulley Gear, 17 Teeth		1

X - as Required

ATTACHMENTS

PART NUMBER	REF. NO.	DESCRIPTION	SERIAL NUMBER	NO. REQ'D
53252 D	28	Belt Pulley Shaft		1
27046 D	30	Belt Pulley Breather Felt		1
27048 D	31	Belt Pulley Breather Screen		1
27044 D	32	Belt Pulley Breather Pipe		1
6846 DX	36	Belt Pulley Gear Box with Pipe Plugs		1
	34	Pipe Plug, 1" Countersunk Head		1
	35	Pipe Plug, 1-1/2" Countersunk Head		2
	29	Pipe Cap, 1"		1
	33	Street Ell, 1"		1
49542 D	37	Belt Pulley Carrier Shim, Heavy		1
49543 D	38	Belt Pulley Carrier Shim, Medium		1
49544 D	39	Belt Pulley Carrier Shim, Light		X
45558 DA	40	Belt Pulley Pinion Retaining Washer Bolt Lock		1
49178 DA	41	Belt Pulley Pinion Retaining Washer		1
		Cap Screw, 3/8 x 1" N.F. Hex. Head		2
53256 D	42	Belt Pulley Pinion, 16 Teeth		1
49546 D	43	Belt Pulley Pinion Shaft Rear Bearing Retainer		1
		Cap Screw, 3/8 x 3/4" N.C. Hex. Head		2
		Lockwasher, 3/8"		2
14226 H	44	Belt Pulley Pinion Shaft Bearing, Rear (N.D. 1308)(ST 206 Will Work)		1
ST 206	44	Belt Pulley Pinion Shaft Bearing, Rear (IHC)(Will Work for 14226 H)		1
8390 DB	45	Belt Pulley Carrier	TCB 3520 Up	1
		Cap Screw, 7/16 x 1-1/2" N.C. Hex. Head		8
		Cap Screw, 5/8 x 2-3/8" N.C. Hex. Head		4
		Cap Screw, 3/4 x 1-3/4" N.C. Hex. Head	TCB 1851 Up	1
		Hex. Nut, 3/4" N.C.	TCB 1851 Up	1
		Lockwasher, 7/16"		8
		Lockwasher, 5/8"		4
8390 DBX	45	Belt Pulley Carrier with Shifter Fork Stop Screw, 63416 D and Lockwasher	TCB 501 to 3519	1
53255 D	46	Belt Pulley Pinion Shaft		1
17767 D	47	Belt Pulley Pinion Shaft Bearing, Front (N.D. 3208) (ST 215 Will Work)		1
ST 215	47	Belt Pulley Pinion Shaft Bearing, Front (IHC)(Will Work for 17767 D)		1
53253 D	48	Belt Pulley Coupling, 16 Teeth		1
49178 DA	49	Belt Pulley Coupling Retaining Washer		1
		Cap Screw, 3/8 x 1" N.F. Hex. Head		2
45558 DA	50	Belt Pulley Coupling Retaining Washer Bolt Lock		1

X - As Required

ATTACHMENTS

PART NUMBER	REF. NO.	DESCRIPTION	SERIAL NUMBER	NO. REQ'D	
53258 D	51	Belt Pulley Shifter Coupling, 16 Teeth		1	
57255 D	52	Power Shaft Bearing Cage Baffle		1	
4596 D	53	Belt Pulley Shifter Poppet (13722 D Will Work)		1	
13722 D	53	Belt Pulley Shifter Poppet (4596 D Will Work)		1	
47823 D	54	Belt Pulley Shifter Poppet Spring (Order 64163 D)		1	
64163 D	54	Belt Pulley Shifter Poppet Spring (Will Work for 47823 D)		1	
49105 D	55	Belt Pulley Shifter Poppet Bushing		1	
		Hex. Jam Nut, 1-3/4" N.C.		1	
20308 D	56	Belt Pulley Gear Bearing (N.D. 3207)(ST 205 A Will Work)		1	
ST 205 A	56	Belt Pulley Gear Bearing (IHC)(Will Work for 20308 D)		1	
49178 DA	57	Belt Pulley Gear Bearing Retaining Washer		1	
		Cap Screw, 3/8 x 1" N.F. Hex. Head		2	
45558 DA	58	Belt Pulley Gear Bearing Retaining Washer Bolt Lock		1	
49538 D	59	Belt Pulley Gear Bearing Cover Gasket		1	
49545 D	60	Belt Pulley Gear Bearing Cover		1	
		Cap Screw, 3/8 x 3/4" N.C. Hex. Head		3	
		Lockwasher, 3/8"		3	
49541 DA	61	Belt Pulley Shifter Pin		2	
8393 DA	62	Belt Pulley Shifter Fork		1	
		Cap Screw, 3/8 x 1-1/4" N.C. Hex. Head		1	
		Lockwasher, 3/8"		1	
45532 DA	63	Belt Pulley Shifter Fork Key		1	
45532 DA	63	Belt Pulley Shifter Lever Key		1	
61758 D	64	Belt Pulley Shifter Shaft	TCB 4160 Up	1	
49537 D	64A	Belt Pulley Shifter Shaft	TCB 501 to 4159	1	
8814 DX	65	Belt Pulley Shifter Hand Lever with Handle, 41597 D			
		(9643 D Will Work)	TCB 4160 Up	1	
9643 D	65	Belt Pulley Shifter, Hand Lever (One Piece)(8814 DX Will Work)		1	
6848 D	65A	Belt Pulley Shifter Hand Lever	TCB 501 to 4159	1	
		Cap Screw, 3/8 x 1-1/4" N.C. Hex. Head		1	
		Lockwasher, 3/8"		1	
41597 D	66	Belt Pulley Shifter Hand Lever Handle (Used with 8814 DX)	TCB 4160 Up	1	
8807 D	67	Belt Pulley Shifter Lever	TCB 4160 Up	1	
		Cap Screw, 3/8 x 1-1/4" N.C. Hex. Head		1	
		Lockwasher, 3/8"		1	
61759 D	68	Belt Pulley Shifter Lever Rod	TCB 4160 Up	1	
		Cotter Pin, 1/8 x 3/4"		1	
		Hex. Nut, 3/8" N.F.		2	
48906 D	69	Belt Pulley Shifter Lever Rod Adjusting Block	TCB 4160 Up	1	
		Cotter Pin, 3/32 x 5/8"		1	
61757 D	70	Belt Pulley Shifter Hand Lever Bracket, Complete	TCB 4160 Up	1	
		Cap Screw, 7/16 x 1-1/4" N.C. Hex. Head		2	
		Cotter Pin, 3/16 x 1-1/4"		1	
45557 D		Belt Pulley Shifter Shaft Plug	TCB 501 to 1850	1	
63416 D		Belt Pulley Shifter Fork Stop Screw	TCB 3520 Up	1	
		Lockwasher, 3/8"		1	

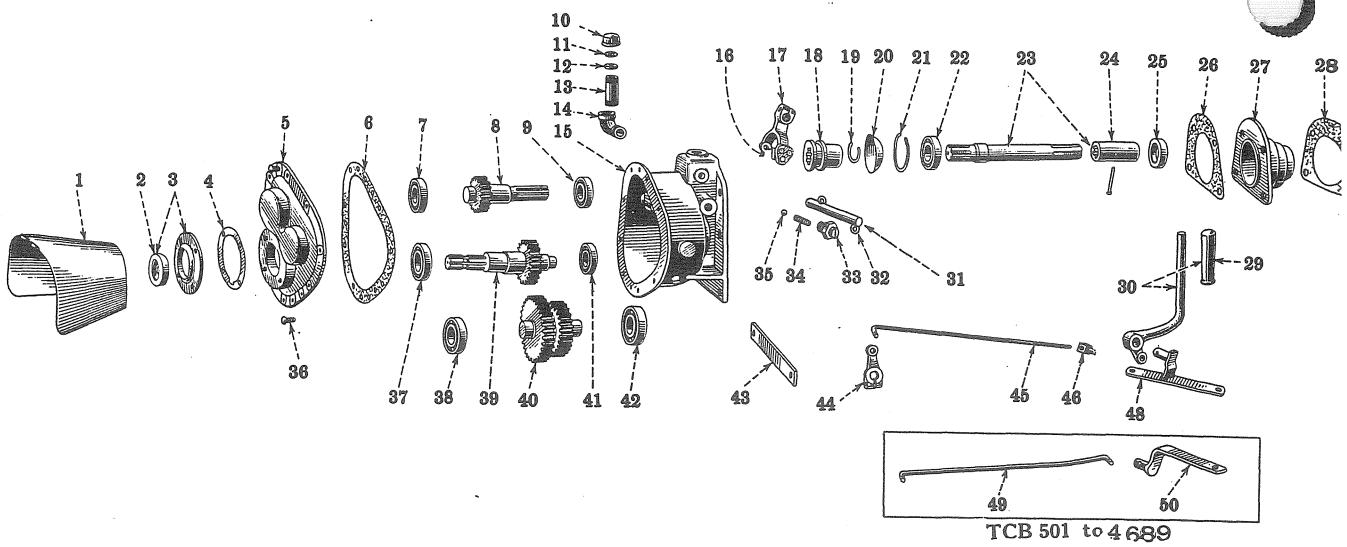

Reference numbers only are shown in illustration. Use I H C part numbers in ordering.

REDUCED SPEED POWER TAKE-OFF, REAR (Special)

58093 D		Reduced Speed, Rear Power Take-Off Attachment (535 R.P.M.)	
		(Machine Attachment)	1
58064 DXA	1	Power Take-Off Safety Shield, Complete	1
		Cap Screw, 5/16 x 1" N.C. Hex Head	4
		Lockwasher, 5/16"	4
58065 D	2	Power Take-Off Gear and Shaft Oil Seal	1
8810 DX	3	Power Take-Off Gear and Shaft Oil Seal Retainer with Oil Seal, 58065 D	1
58080 D	4	Power Take-Off Gear and Shaft Oil Seal Retainer Gasket	1
8812 D	5	Power Take-Off Housing Cover	1
		Cap Screw, 3/8 x 1-1/4" N.F. Hex Head	9
		Hex Nut, 3/8" N.F.	9
		Lockwasher, 3/8"	9
58081 D	6	Power Take-Off Housing Cover Gasket	1
18575 H	7	Power Take-Off Pinion Bearing, Rear (N.D. 1208)(ST 214 Will Work)	1
ST 214	7	Power Take-Off Pinion Bearing, Rear (IHC)(Will Work for 18575 H)	1
58086 D	8	Power Take-Off Pinion, 18 Teeth	1
20308 D	9	Power Take-Off Pinion Bearing, Front (ST 205 A Will Work)	1
ST 205 A	9	Power Take-Off Pinion Bearing, Front (IHC)(Will Work for 20308 D)	1

ATTACHMENTS

PART NUMBER	REF. NO.	DESCRIPTION	SERIAL NUMBER	NO. REQ'D	
27048 D	11	Power Take-Off Breather Screen		1	
27046 D	12	Power Take-Off Breather Felt		1	
27044	13	Power Take-Off Breather Pipe		1	
	14	Street Elbow, 1"		1	
	10	Iron Pipe Cap, 1"		1	
8811 DX	15	Power Take-Off Housing With Pipe Plugs		1	
		Cap Screw, 5/8 x 2" N.C. Hex Head		5	
		Cap Screw; 5/8 x 1-1/2" N.C. Hex Head		1	
		Cap Screw, 3/4 x 1-3/4" N.C. Hex Head		1	
		Hex. Nut, 3/4" N.C.		1	
		Lockwasher, 5/8"		6	
		Pipe Plug, 3/4" Square Head		2	
		Pipe Plug, 1" Square Head		1	
45533 DA	16	Power Take-Off Shifter Pin		2	
8809 DA	17	Power Take-Off Shifter Fork		1	
		Cap Screw, 3/8 x 1-1/4" N.F. Hex. Head		1	
		Lockwasher, 3/8"		1	
58073 DB	18	Power Take-Off Shifter Coupling		1	
48512 D	19	Power Take-Off Shaft Bearing Retainer Snap Ring, Outer		1	
58069 D	20	Power Take-Off Shaft Oil Slinger		1	
48514 D	21	Power Take-Off Shaft Bearing Retainer Snap Ring, Inner		1	
4452 D	22	Power Take-Off Shaft Bearing (N.D. No. 120) (ST 204 Will Work)		1	
ST 204	22	Power Take-Off Shaft Bearing (IHC)(Will Work for 4452 D)		1	
58090 DBX	23	Power Take-Off Shaft with Coupling, 49548 D and 1 Rivet,			
		5/16 x 2-5/8" Round Head		1	
49548 D	24	Power Take-Off Shaft Coupling		1	
		Steel Rivet, 5/16 x 2-5/8" Round Head		1	
53968 D	25	Power Take-Off Shaft Oil Seal, Inner		1	
58068 D	26	Power Take-Off Housing Gasket		1	
8808 DX	27	Power Take-Off Shaft Bearing Cage With Oil Seal, 53968 D		1	
58068 D	28	Power Take-Off Shaft Bearing Cage Gasket		1	
41597 D	29	Power Take-Off Shifter Hand Lever Handle (Used with 8814 DX)		1	
8814 DX	30	Power Take-Off Shifter Hand Lever with Handle, 41597 D (9643 D Will Work)		1	
		Cotter Pin, 3/16 x 1-1/4"		1	
9643 D	30	Power Take-Off Shifter Hand Lever (One Piece)(8814 DX Will Work)		1	
58070 D	31	Power Take-Off Shifter Shaft		1	
45532 DA	32	Power Take-Off Shifter Fork Key		1	
45532 DA	32	Power Take-Off Shifter Lever Key		1	
49105 D	33	Power Take-Off Shifter Poppet Bushing		1	
		Hex. Jam Nut, 3/4" N.C.		1	
47823 D	34	Power Take-Off Shifter Poppet Spring (Order 64163 D)		1	
64163 D	34	Power Take-Off Shifter Poppet Spring (Will Work for 47823 D)		1	
4596 D	35	Power Take-Off Shifter Poppet (13722 D Will Work)		1	
13722 D	35	Power Take-Off Shifter Poppet (4596 D Will Work)		1	

ATTACHMENTS

PART NUMBER	REF. NO.	DESCRIPTION	SERIAL NUMBER	NO. REQ'D
45442 D	36	Power Take-Off Housing Cover Dowel Pin		2
13176 D	37	Power Take-Off Gear and Shaft Bearing, Rear (N.D. 1209)		
		(ST 201 Will Work)		1
ST 201	37	Power Take-Off Gear and Shaft Bearing, Rear (IHC)(Will Work for 13176 D)		1
20308 D	38	Power Take-Off Idler Gear Bearing, Rear (N.D. 3207)		
		(ST 205 A Will Work)		1
ST 205 A	38	Power Take-Off Idler Gear Bearing, Rear (IHC)(Will Work for 20308 D)		1
58087 D	39	Power Take-Off Gear and Shaft, 24 Teeth		1
58084 D	40	Power Take-Off Idler Gear, 23 and 30 Teeth		1
ST 210	41	Power Take-Off Gear and Shaft Bearing, Front (IHC)(Will Work for 10693 V)		1
10693 V	41	Power Take-Off Gear and Shaft Bearing, Front (N.D. 1306)		
		(ST 210 Will Work)		1
ST 200	42	Power Take-Off Idler Gear Bearing, Front (IHC)(Will Work for 10691 V)		1
10691 V	42	Power Take-Off Idler Gear Bearing, Front (N.D. 1307)(ST 200 Will Work)		1
58072 D	43	Power Take-Off Housing Spacer		1
8807 D	44	Power Take-Off Shifter Lever		1
		Cap Screw, 3/8 x 1-3/8" N.C. Hex. Head		1
		Lockwasher, 3/8"		1
61759 D	45	Power Take-Off Shifter Lever Rod	TCB 4690 Up	1
		Cotter Pin, 1/8 x 3/4"		1
		Hex. Nut, 3/8" N.F.		2
48906 D	46	Power Take-Off Shifter Lever Rod Adjusting Block		1
		Cotter Pin, 3/32 x 5/8"		1
61757 D	48	Power Take-Off Shifter Hand Lever Bracket with Arm and Pivot Pin	TCB 4690 Up	1
		Cap Screw, 7/16 x 1-1/4" N.C. Hex. Head		2
58088 D	49	Power Take-Off Shifter Lever Rod (Order 64956 D)	TCB 501 to 4689	1
		Cotter Pin, 1/8 x 3/4"		1
		Hex. Nut, 3/8" N.F.		2
58089 DX	50	Power Take-Off Shifter Hand Lever Bracket with Pivot Pin		
		(Order 64956 D)	TCB 501 to 4689	1
		Cap Screw, 7/16 x 2-3/8" N.C. Hex Head		2
64956 D		Power Take-Off Shifter Rod, 61759 D With Bracket, 61757 D,		
		Adjusting Block, 48906 D (Will Work for 58088 D and 58089 DX)	TCB 501 to 4689	1

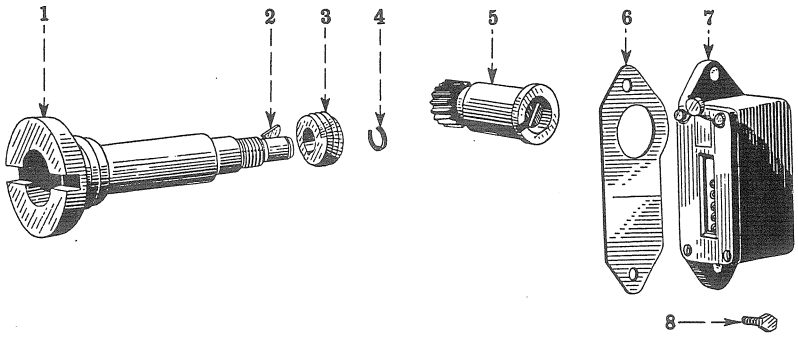

Reference numbers only are shown in illustration. Use I H C part numbers in ordering.

HOUR METER (Special) (Stewart-Warner Corporation)

53670 D			Hour Meter Attachment (TD-9)	1	
51774 D	1		Magneto Drive Shaft	1	
10064 D	2		Hour Meter Drive Gear Key (Woodruff No. 2)	1	
51001 D	3	103782	Hour Meter Drive Gear	1	
21362 D	4		Hour Meter Drive Gear Retainer	1	
51002 D	5	103783	Hour Meter Drive Gear, Complete	1	
49451 D	6		Hour Meter Gasket	1	
49450 D	7	888-A	Hour Meter	1	
			Lockwasher, 1/4"	2	
23086 D	8		Hour Meter Cap Screw	2	

ATTACHMENTS

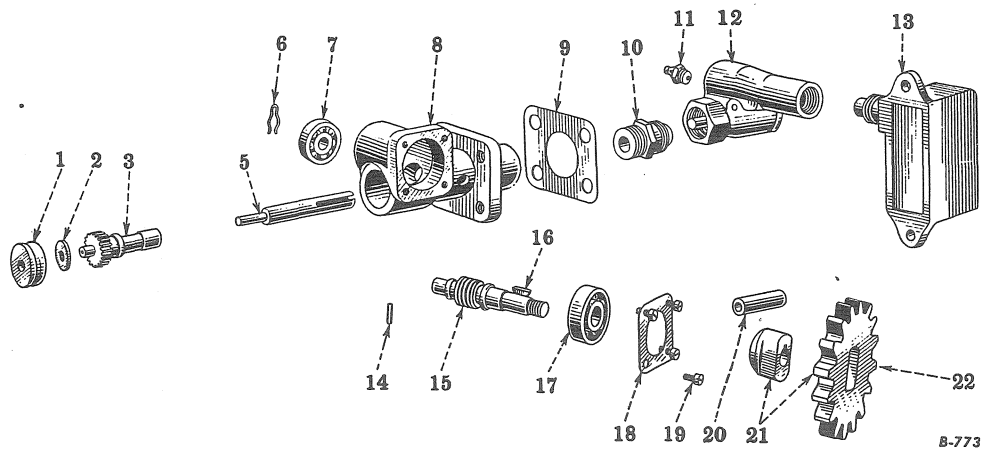

Reference numbers only are shown in illustration. Use I H C part numbers in ordering.

ODOMETER (Special) (Stewart-Warner Corporation)

59337 D			Odometer (Machine Attachment) TCB 501 to 3738	1
59338 D			Odometer (Machine Attachment) TCB 3739 Up	1
37574 D	1	96358	Odometer Drive Gear (Spiral) Bearing (Note)	1
26259 D	2	843	Odometer Lower Driven Gear and Shaft Thrust Washer (Note)	1
26257 D	3	96213	Odometer Lower Driven Gear and Shaft, R.H. (20 Teeth)(Note)	1
59056 D	5		Odometer Drive Shaft Extension	1
31180 D	6		Odometer Drive Gear Shaft Rear Bearing Lock	1
26256 D	7		Odometer Drive Gear Shaft Rear Bearing (N.D. 39 S.R.)	1
8917 DX	8		Odometer Drive Housing, Complete	
			Capscrew, 3/8 x 1-1/2" N.C. Hex Head	4
			Lockwasher, 3/8"	4
59054 D	9		Odometer Drive Housing Gasket	1
26261 D	10	20312	Odometer Drive Housing Sleeve (Note)	1
Q 3626	11		Odometer Drive Upper Joint Lubricator	1
59122 D	12	105597	Odometer Drive Upper Joint Assembly and Coupling Nut (Note)	1
37599 D	13	S-776-A	Odometer Head, Complete (Note)	1
			Screw, No. 12 - 24 x 2-1/4" Round Head	2
			Lockwasher, No. 12 (Note)	2
6403 T	14		Odometer Drive Gear Bearing Pin	1
26251 D	15		Odometer Drive Gear Shaft (1 Tooth)	1
			Hex Jam Nut, 3/8" N.F. (Slotted)	1
			Cotter Pin, 3/32 x 5/8"	1
			Steel Washer, 25/64" I.D. x 7/8" O.D. x No. 16 Ga.	
			(Q 1505)	1
4167 T	16		Odometer Drive Gear Hub Key (Woodruff No. 3)	1
11294 V	17		Odometer Drive Gear Shaft Front Bearing (N.D. 3201)	1
26249 D	18		Odometer Drive Gear Shaft Front Bearing Retainer	1
26250 D	19		Odometer Drive Gear Shaft Front Bearing Retainer Screw	4
59123 D	20		Odometer Support (Pipe, 1/8 x 1-1/2" Long)	2
59055 DX	21		Odometer Drive Gear with Hub	1
59055 D	22		Odometer Drive Gear (16 Teeth)	1

NOTE - All Service and Replacement Parts for Hour Meter and Odometer Head should be Referred to an Authorized Stewart-Warner Service Branch or Service Station

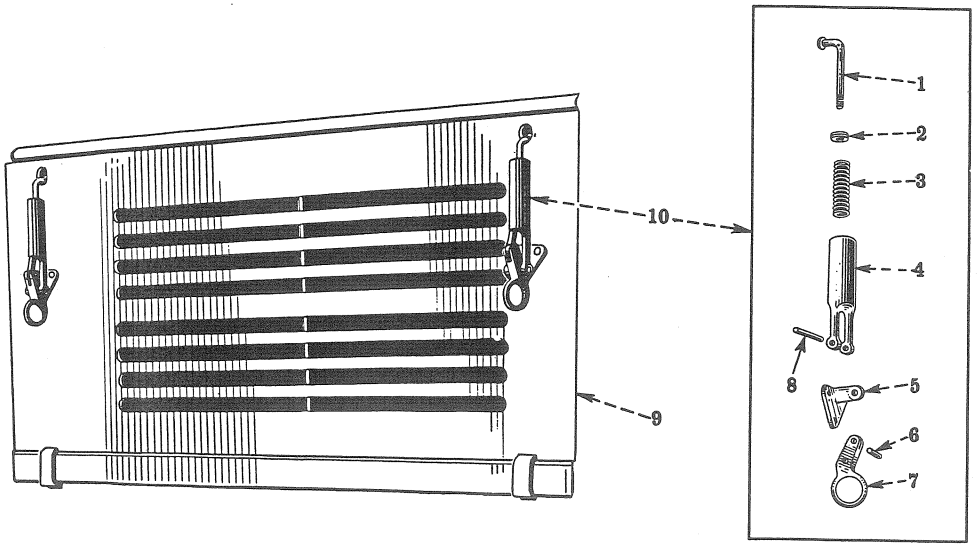

Reference numbers only are shown in illustration. Use I H C part numbers in ordering.
Unnumbered parts in the illustrations are the same as corresponding parts shown with numbers.

HOOD SIDE DOORS (Special)

48848 D		Hood Side Door Attachment (Machine Attachment)			
67670 D		Hood Side Door Attachment (⊛ Used on Modified Units Bucyrus No. 30)		1	
58099 DA	1	Hood Fastener Spring Bolt	TCB 1787 Up	4	
		Hex. Nut, 5/16" N.C.		4	
58101 D	2	Hood Fastener Spring Bolt Guide	TCB 1787 Up	4	
58100 D	3	Hood Fastener Spring (Order 64159 D)	TCB 1787 Up	4	
64159 D	3	Hood Fastener Spring (Will Work For 58100 D)	TCB 1787 Up	4	
8815 D	4	Hood Fastener Spring Holder	TCB 1787 Up	4	
8817 D	5	Hood Fastener Bracket	TCB 1787 Up	4	
		Iron Rivet, 3/16 x 5/8" Round Head		12	
58103 D	6	Hood Fastener Toggle pin	TCB 1787 Up	4	
8816 D	7	Hood Fastener Toggle	TCB 1787 Up	4	
58102 D	8	Hood Fastener Spring Holder Pin (Order G 9210)	TCB 1787 Up	4	
G 9210	8	Hood Fastener Spring Holder Pin (Will Work For 58102 D)	TCB 1787 Up	4	
51550 DX	9	Hood Side Door, L.H., Complete		1	
51551 DX	9	Hood Side Door, R.H., Complete		1	
67671 DX	9	Hood Side Door, L.H., Complete			
		(⊛ Used on Modified Units Bucyrus-Erie No. 30)		1	
67672 DX	9	Hood Side Door, R.H., Complete			
		(⊛ Used on Modified Units Bucyrus-Erie No. 30)		1	
27159 D	10	Hood Side Door Latch (Order 27159 DB)	TCB 501 to 1786	4	
		Iron Rivet, 3/16 x 5/8" Round Head		12	
27159 DB	10	Hood Side Door Latch, Complete			
		(⊛ Also Used on Modified Unit Bucyrus-Erie No. 30)	TCB 1787 Up	4	
67669 DX		Hood Sheet (⊛ Used on Modified Units Bucyrus-Erie No. 30)		1	
		⊛ - For Tabulation of Modifications see Introduction Page			

(Revised 2-'46)

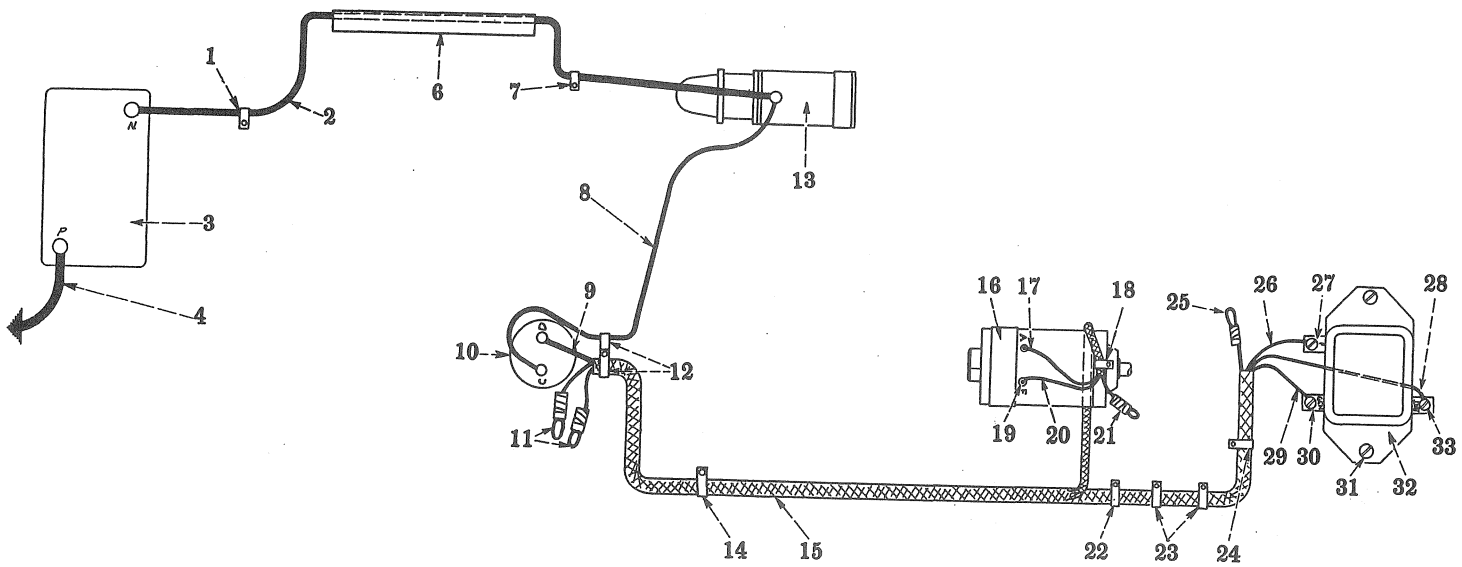

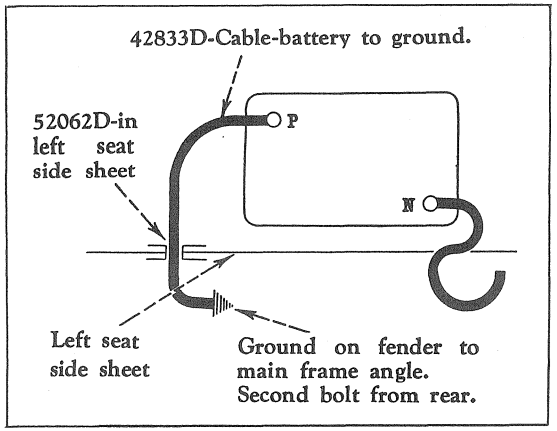

WIRING FOR BATTERIES ON FENDERS

Reference numbers only are shown in illustration. Use I H C part numbers in ordering.

WIRING DIAGRAM—ELECTRIC STARTING (Special) (6 Volts) (Delco-Remy)

T9

INDEX TO REFERENCE NUMBERS IN ILLUSTRATION

Ref. No.	I H C Part No.	Description
1	57276 D	Clip - on Shifter Fork Housing Cover Corner Bolt.
2	57283 DA	Cable - Battery to Starting Switch.
3	53505 VC 53505 VE 55463 D 55464 D 60910 DNS	Battery.
4	49242 D	Cable - Battery to Ground.
6		Foot Rest.
7	57276 D	Clip - on Engine Clutch Cover - Second Bolt from Rear.
8	57286 DX	Cable - Starting Switch to Ammeter.
9		Cable - Relay to Ammeter - Natural with Black and Red Cross Tracers. (Order 57285 D)
10	42383 D	Ammeter.
11		Cable - Switch to Junction Block - Black, and Generator Field to Switch - Natural with Black Tracer. (Order 57285 D)
12	29325 D	Clip - on Dash. Use 3/8 N.C. x 3/4" Cap Screw, Nut and Lockwasher.
13	54871 DA	Starting Motor.
14	27385 D	Clip - on Side Angle. Use 3/8 N.C. x 1" Cap Screw, Nut and Lockwasher.
15	57285 D	Cable Harness.
16	47880 D	Generator.
17		Cable - "A" Terminal on Generator to "GEN" Terminal on Relay - Natural with Black Cross Tracer. (Order 57285 D)
18	49572 D	Clip - on Generator Brace Bolt.
19		"F" Terminal on Generator.
20		Cable - "F" Terminal on Generator to "F" Terminal on Relay - Natural. (Order 57285 D)
21		Cable - "F" Terminal on Generator to Switch Cable - Natural with Black Tracer. (Order 57285 D)
22	27385 D	Clip - on Side Angle.
23	57146 D	Clip - on Fan Shroud Bolts.
24	38815 D	Clip - Under Relay Mounting Stud.
25		Cable - Switch to Junction Block - Black. (Order 57285 D)
26		Cable - "F" Terminal on Generator to "F" Terminal on Relay. Natural. (Order 57285 D)
27		"F" Terminal on Relay.
28		Cable - Relay to Ammeter - Natural with Black and Red Cross Tracer. (Order 57285 D)
29		Cable - "A" Terminal on Generator to "GEN" Terminal on Relay. Natural with Black Cross Tracers. (Order 57285 D)
30		"GEN" Terminal on Relay.
31		Mounting Screw.
32	47885 D	Relay
33		"BAT" Terminal on Relay

NOTE -
DO NOT RUN GENERATOR WITH "F" TERMINAL ON FRAME CONNECTED TO SWITCH UNLESS BATTERY CHARGING CIRCUIT IS COMPLETED AND LEAD FROM "A" TERMINAL IS CONNECTED AS SHOWN. IF IT IS NECESSARY TO OPERATE GENERATOR WITHOUT BATTERY CONNECTIONS, REMOVE GENERATOR FIELD TO SWITCH CABLE FROM "F" TERMINAL ON GENERATOR FRAME.

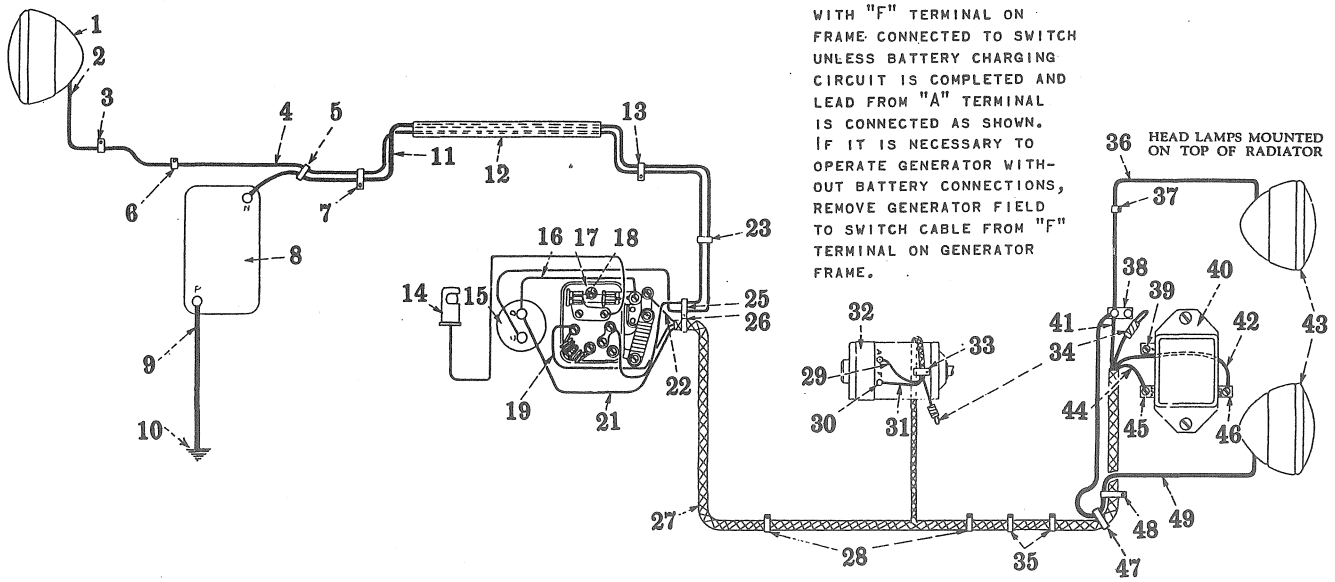

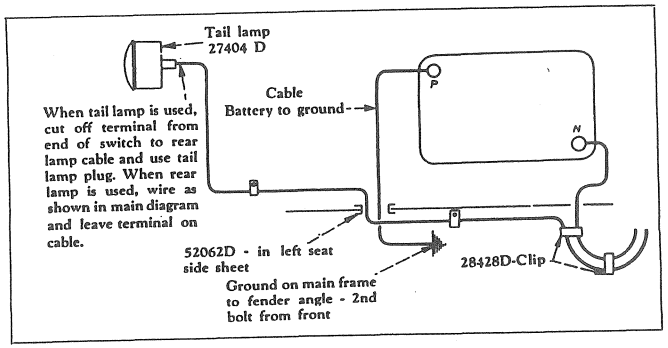

WIRING FOR BATTERY ON FENDER AND TAIL LAMP.

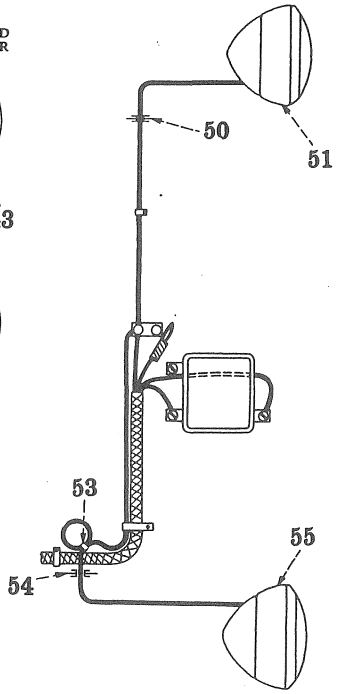

WIRING FOR HEAD LAMPS MOUNTED ON SIDE OF RADIATOR.

Reference numbers only are shown in illustration. Use I H C part numbers in ordering.

WIRING DIAGRAM—ELECTRIC LIGHTING (Special) (6 Volts) (Delco-Remy)

INDEX TO REFERENCE NUMBERS IN ILLUSTRATION

Ref. No.	I H C Part No.	Description
1	47926 D	Rear Lamp.
2		Refer to Illustration Showing Tail Lamp Wiring.
3	27386 D	Clip - on Fender Mounting Carriage Bolt in Rear Bracket.
4	57277 D	Cable.
5	28428 D	Clamp.
6	10789 V	Clip - on Fender Mounting Bolt, Second from Fuel Tank.
7	57275 D	Clip - on Shifter Fork Housing Cover Corner Bolt.
8	54872 D 60910 DNS 55464 D	Battery.
9	49242 D	Cable - Battery to Ground.
10		Ground on Fender to Main Frame Brace - Third Bolt From Front.
11	57279 D	Cable - Battery to Ammeter.
12		Foot Rest.
13	57276 D	Clip - on Engine Clutch Cover, Second Bolt from Rear. Form Clip in Assembly to Fit Cable and Bend it to Hold Cable Rigidly Against Main Frame.
14	59175 D	Dash Lamp.
15	42383 D	Ammeter.
16	52030 DX	Cable - Ammeter to Switch.
17	57310 DY	Switch.
18	10815 VA	Fuse.
19		Cable - Switch to Junction Block - Black (Order 57285 D)
21		Cable - Relay to Ammeter - Natural with Black and Red Cross Tracers. (Order 57285 D)
22		Cable - Generator Field to Switch - Natural with Black Tracer. (Order 57285 D)
23	28428 D	Clamp
25 26	27387 D 29325 D	Clips - on Dash Use 3/8 N.C. x 3/4" Cap Screw, Nut and Lockwasher.
27	57285 D	Cable Harness.
28	27385 D	Clip - on Side Angle.
29		Cable - "A" Terminal on Generator to "GEN" Terminal on Relay - Natural with Black Cross Tracer. (Order 57285 D)
30		"F" Terminal on Generator.
31		Cable - "F" Terminal on Generator to Switch - Natural with Black Tracer. (Order 57285 D)
32	47880 D	Generator.
33	49572 D	Clip - on Generator Brace Bolt.
34		Cable - "F" Terminal on Generator to "F" Terminal on Relay - Natural. (Order 57285 D)
35	57146 D	Clip - on Fan Shroud Bolts.
36	57062 DX	Cable - Left Head Lamp to Junction Block.
37	27385 D	Clip - on Lower Bolt of Gas Tank.
38	42917 D	Junction Block.
39		"F" Terminal on Relay. Not Used for Lighting Attachment.
40	47885 D	Relay.
41		Cable - Switch to Junction Block - Black. (Order 57285 D)
42		Cable - "BAT" on Relay to Ammeter - Natural with Black and Red Cross Tracers. (Order 57285 D)
43	47926 D	Head Lamp.
44		Cable - "A" Terminal on Generator to "GEN" Terminal on Relay. Natural with Black Cross Tracers. (Order 57285 D)
45		"GEN" Terminal on Relay.
46		"BAT" Terminal on Relay.
47	28428 D	Clamp.
48	57143 D	Clip - Under Relay Mounting Stud.
49	57062 DX	Cable - Right Head Lamp to Junction Block.
50	1627 Y	Grommet in Radiator Grill.
51	47924 D	Left Head Lamp.
53	28428 D	Clamp.
54	1627 Y	Grommet in Radiator Grill.
55	47925 D	Right Head Lamp.

NOTE -
DO NOT RUN GENERATOR WITH "F" TERMINAL ON FRAME CONNECTED TO SWITCH UNLESS BATTERY CHARGING CIRCUIT IS COMPLETED AND LEAD FROM "A" TERMINAL IS CONNECTED AS SHOWN.
IF IT IS NECESSARY TO OPERATE GENERATOR WITHOUT BATTERY CONNECTIONS, REMOVE GENERATOR FIELD TO SWITCH CABLE FROM " TERMINAL ON GENERATOR FRAME.

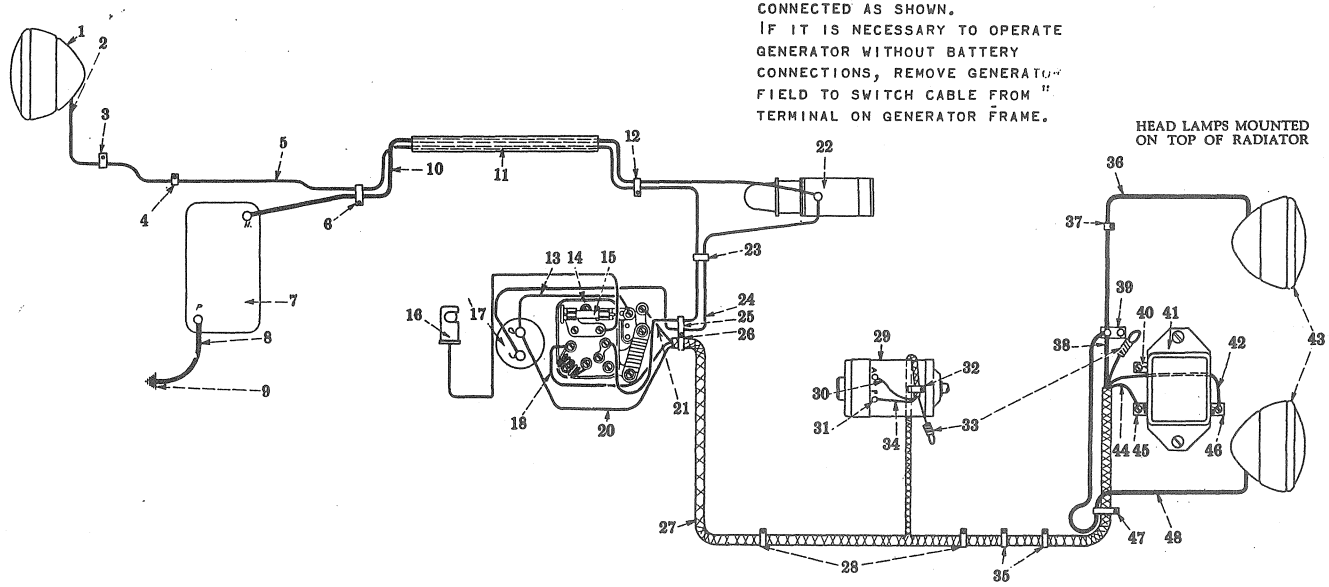

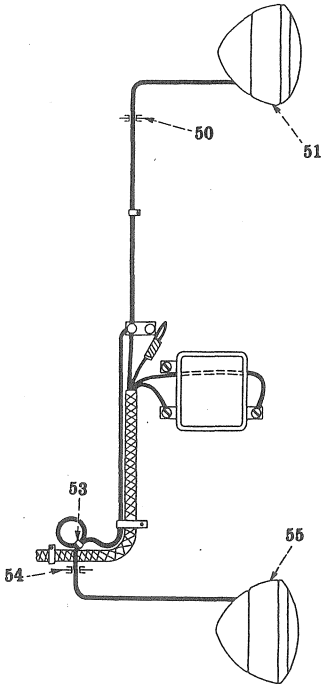

WIRING FOR HEAD LAMPS MOUNTED ON SIDE OF RADIATOR.

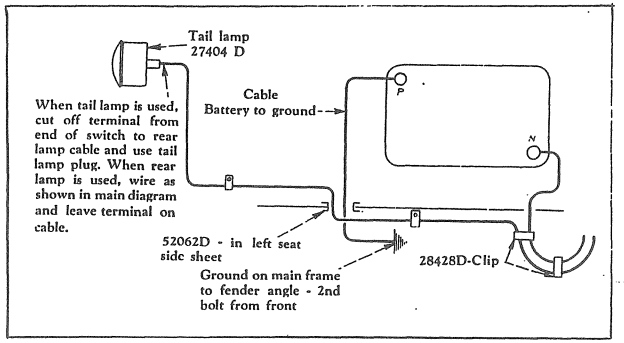

WIRING FOR BATTERY ON FENDER AND TAIL LAMP.

Reference numbers only are shown in illustration. Use I H C part numbers in ordering.

WIRING DIAGRAM—ELECTRIC LIGHTING AND STARTING (Special) (6 Volts) (Delco-Remy)
T9

GENUINE IHC PARTS

INDEX TO REFERENCE NUMBERS IN ILLUSTRATION

Ref. No.	I H C Part No.	Description
1	47926 D	Rear Lamp.
2		Refer to Illustration for Tail Lamp Wiring when Tail Lamp is Used.
3	27386 D	Clip - on Fender Mounting Carriage Bolt in Rear Bracket.
4	10789 V	Clip - on Fender Mounting Bolt, Second from Fuel Tank.
5	57277 D	Cable - to Rear Lamp.
6	57275 D	Clip - on Shifter Fork Housing Cover Corner Bolt.
7	53505 VC 53505 VE 55463 D	Battery.
8	49242 D	Cable - Battery to Ground.
9		Ground Cable on Main Frame Cover Bolt, Second from Right Side.
10	57283 DA	Cable - Battery to Starting Switch.
11		Foot Rest.
12	57276 D	Clip - on Engine Clutch Cover, Second Bolt from Rear.
13	52030 DX	Cable - Ammeter to Switch.
14	57310 DY	Switch.
15	10815 VA	Fuse.
16	59175 D	Dash Lamp.
17	42383 D	Ammeter.
18		Cable - Switch to Junction Block, Color, Black. (Order 57285 D)
20		Cable - Relay to Ammeter, Color, Natural with Black and Red Cross Tracers. (Order 57285 D)
21		Cable - Generator Field to Switch - Natural with Black Tracer. (Order 57285 D)
22	54871 DA	Starting Motor.
23	28428 D	Clip.
24	57286 DX	Cable - Starting Switch to Ammeter.
25	27387 D	Clip - on Dash.
26	29325 D	Clip - on Dash.
27	57285 D	Cable Harness.
28	27385 D	Clips - on Side Angle.
29	47880 D	Generator.
30		Cable - "A" Terminal on Generator to "GEN" Terminal on Relay - Natural with Black Cross Tracer. (Order 57285 D)
31		"F" Terminal on Generator.
32	49572	Clip - on Generator Brace Bolt.
33		Cable - "F" Terminal on Generator to "F" Terminal on Relay - Natural. (Order 57285 D)
34		Cable - "F" Terminal on Generator to Switch Cable - Natural with Black Tracer. (Order 57285 D)
35	57146 D	Clips - on Fan Shroud Bolts.
36	57062 DX	Cable - Left Head Lamp to Junction Block Cable.
37	27385 D	Clip - on Lower Bolt of Gasoline Tank.
38		Cable - Switch to Junction Block - Black. (Order 57285 D)
39	42917 D	Junction Block.
40		"F" Terminal on Relay.
41	47885 D	Relay.
42		Cable - Relay to Ammeter Cable - Natural with Black and Red Cross Tracers. (Order 57285 D)
43	47926 D	Head Lamp.
44		Cable - "A" Terminal on Generator to "GEN" Terminal on Relay - Natural with Black Cross Tracer. (Order 57285 D)
45		"GEN" Terminal on Relay.
46		"BAT" Terminal on Relay.
47	57143 D	Clip - Under Relay Mounting Stud.
48	57062 DX	Cable - Right Head Lamp to Junction Block Cable.
50	1627 Y	Grommet in Radiator Grille.
51	47924 D	Left Head Lamp.
53	28428 D	Clamp.
54	1627 Y	Grommet in Radiator Grille.
55	47925 D	Right Head Lamp.

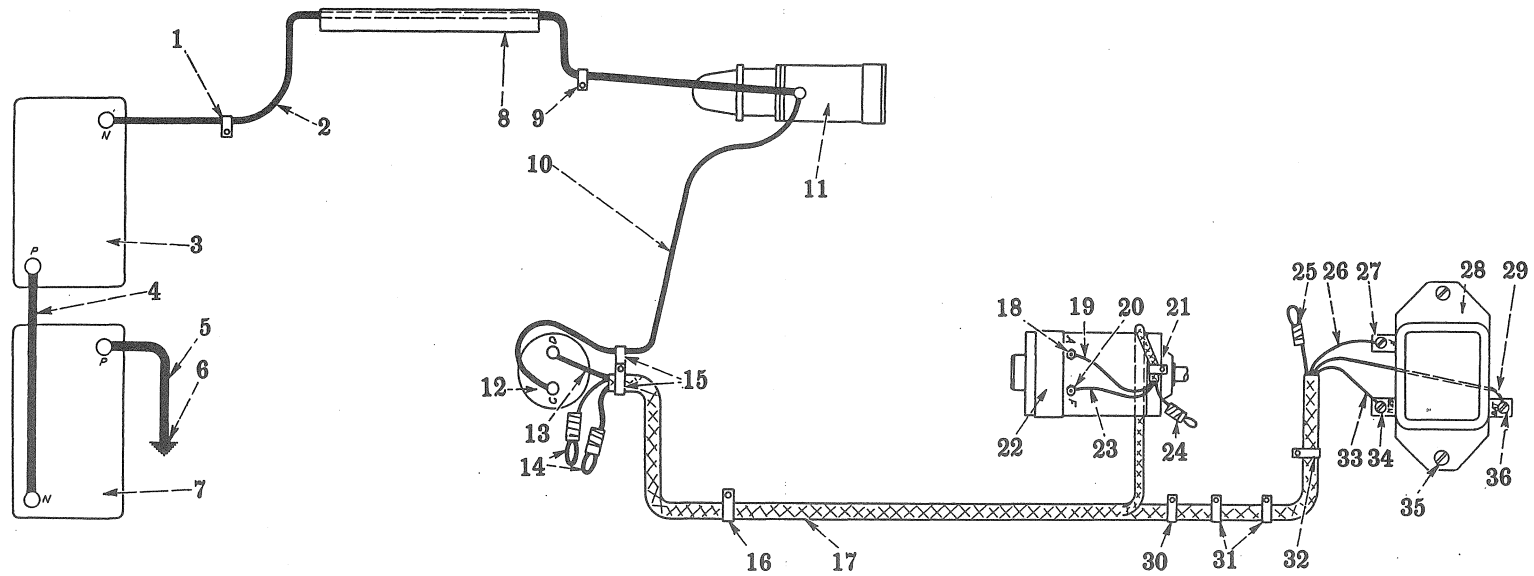

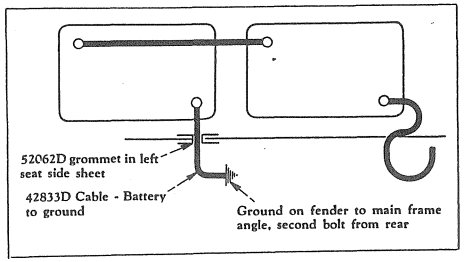

WIRING FOR BATTERIES ON FENDERS

Reference numbers only are shown in illustration. Use I H C part numbers in ordering.

WIRING DIAGRAM—ELECTRIC STARTING (Special) (12 Volts) (Delco-Remy)
TD9

GENUINE IHC PARTS

INDEX TO REFERENCE NUMBERS IN ILLUSTRATION

REF. No.	I H C PART No.	DESCRIPTION
1	57276 D	CLIP - ON SHIFTER FORK HOUSING COVER CORNER BOLT.
2	57283 DA	CABLE - BATTERY TO STARTING SWITCH.
3	52662 VC 52662 VE 55462 D	BATTERY.
4	57281 D	CABLE - BATTERY TO BATTERY.
5	49242 D	CABLE - BATTERY TO GROUND.
6		GROUND ON FENDER TO MAIN FRAME ANGLE, SECOND BOLT FROM FRONT.
7	52662 VC 52662 VE 55462 D	BATTERY.
8		FOOT REST
9	57276 D	CLIP - ON ENGINE CLUTCH COVER, SECOND BOLT FROM REAR.
10	57286 DX	CABLE - STARTING MOTOR TO AMMETER.
11	47871 D	STARTING MOTOR.
12	42383 D	AMMETER.
13		CABLE - RELAY TO AMMETER, NATURAL WITH BLACK AND RED CROSS TRACERS. (ORDER 57285 D)
14		CABLES- SWITCH TO JUNCTION BLOCK AND GENERATOR FIELD TO SWITCH CABLE, NATURAL WITH BLACK TRACER. (ORDER 57285 D)
15	29325 D	CLIP - ON DASH.
16	27385 D	CLIP - ON SIDE ANGLE.
17	57285 D	CABLE HARNESS.
18		"A" TERMINAL ON GENERATOR.
19		CABLE - "A" TERMINAL ON GENERATOR TO "GEN" TERMINAL ON RELAY. CABLE - NATURAL WITH BLACK CROSS TRACER. (ORDER 57285 D)
20		"F" TERMINAL ON GENERATOR.
21	49572 D	CLIP - ON GENERATOR BRACE BOLT.
22	51602 D	GENERATOR.
23		CABLE - "F" TERMINAL ON GENERATOR TO "F" ON RELAY, NATURAL. (ORDER 57285 D)
24		CABLE - "F" TERMINAL ON GENERATOR TO SWITCH CABLE, NATURAL WITH BLACK TRACER. (ORDER 57285 D)
25		CABLE - SWITCH TO JUNCTION BLOCK - BLACK. (ORDER 57285 D)
26		CABLE - "F" TERMINAL ON GENERATOR TO "F" TERMINAL ON RELAY, NATURAL. (ORDER 57285 D)
27		"F" TERMINAL ON RELAY.
28	52297 D	RELAY.
29		CABLE - RELAY TO AMMETER, NATURAL WITH BLACK AND RED CROSS TRACERS. (ORDER 57285 D)
30	27385 D	CLIP - ON SIDE ANGLE, USE 3/8 N.C. x 1" CAP SCREW, NUT AND LOCKWASHER.
31	57146 D	CLIPS - ON FAN SHROUD BOLTS.
32	38815 D	CLIP - UNDER RELAY MOUNTING STUD, BEND IN ASSEMBLY.
33		CABLE - "A" TERMINAL ON GENERATOR TO "GEN" TERMINAL ON RELAY, NATURAL WITH BLACK CROSS TRACERS. (ORDER 57285 D)
34		GENERATOR "GEN" TERMINAL ON RELAY.
35		RELAY MOUNTING SCREW.
36		BATTERY (BAT.) TERMINAL ON RELAY.

GENUINE IHC PARTS

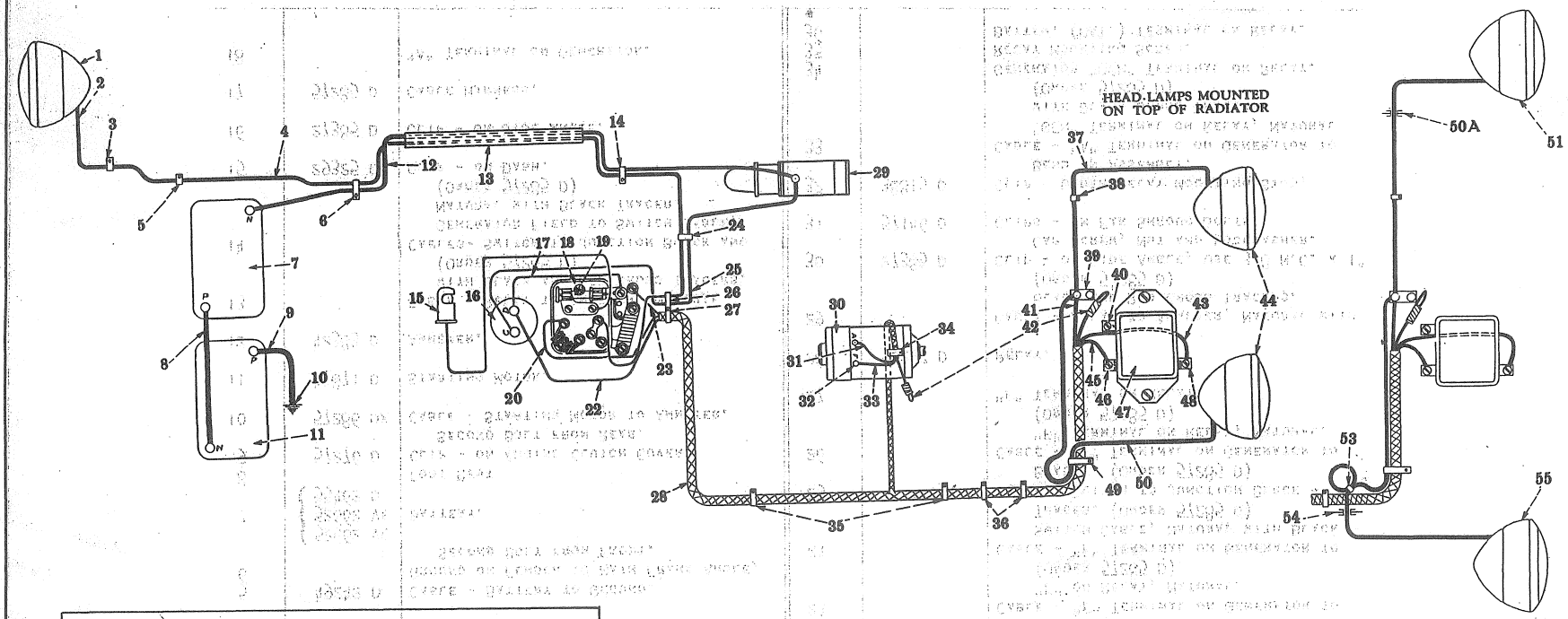

WIRING FOR HEAD LAMPS MOUNTING ON SIDE OF RADIATOR

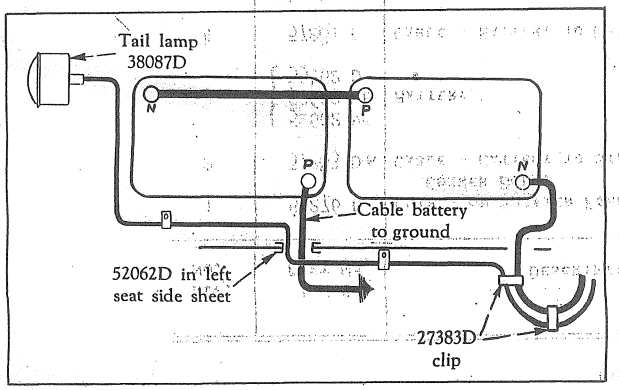

WIRING FOR BATTERIES ON FENDER AND TAIL LAMP.

Reference numbers only are shown in illustration. Use I H C part numbers in ordering.

WIRING DIAGRAM—ELECTRIC LIGHTING AND STARTING (Special) (12 Volts) (Delco-Remy)

GENUINE IHC PARTS

INDEX TO REFERENCE NUMBERS IN ILLUSTRATION

Ref. No.	I H C Part No.	Description
1	43035 D	Rear Lamp.
2		Refer to Illustration for Tail Lamp Wiring when Tail Lamp is Used.
3	27386 D	Clip - on Fender Mounting Carriage Bolt in Rear Bracket.
4	57277 D	Cable - for Tail Lamp.
5	10789 V	Clip - on Fender Mounting Bolt, Second from Fuel Tank.
6	57275 D	Clip - on Shifter Fork Housing Cover Corner Bolt.
7	52662 VC 52662 VE 55462 D	Battery
8	57281 D	Cable - Battery to Battery.
9	49242 D	Cable - Battery to Ground.
10		Ground on Fender to Main Frame Angle on Second Bolt from Front
11	52662 VC 52662 VE 55462 D	Battery.
12	57283 DA	Cable - Battery to Starting Switch.
13		Foot Rest.
14	57276 D	Clip - on Engine Clutch Cover, Second Bolt from Rear.
15	59175 D	Dash Lamp.
16	42383 D	Ammeter.
17	52030 DX	Cable - Ammeter to Switch Cable.
18	57311 DY	Switch.
19	10815 V	Fuse.
20		Cable - Switch to Junction Block - Black.
22		Cable - Relay to Ammeter, Natural with Black and Red Cross Tracers. (Order 57285 D)
23		Cable - Field to Switch, Natural with Black Tracer. (Order 57285 D)
24	28428 D	Clip.
25	57286 DX	Cable - Starting Motor to Ammeter.
26	27387 D	Clip - on Dash.
27	29325 D	Clip - on Dash.
28	57285 D	Cable Harness.
29	47871 D	Starting Motor.
30	51602 D	Generator.
31		Cable - "A" Terminal on Generator to "GEN" Terminal on Relay. Natural with Black Cross Tracer. (Order 57285 D)
32		"F" (Field) Terminal on Generator.
33		Cable - "F" Terminal on Generator to Switch. Natural with Black Tracer. (Order 57285 D)
34	49572 D	Clip - on Generator Brace Bolt.
35	27385 D	Clips - on Side Angle.
36	57146 D	Clips - on Fan Shroud Bolts.
37	57062 DX	Cable - Left Head Lamp to Junction Block.
38	27385 D	Clip - on Lower Bolt of Gas Tank.
39	42917 D	Junction Block.
40		"F" Terminal on Relay, Not Used.
41		Cable - Switch to Junction Block, Black.
42		Cable - "F" Terminal on Generator to "F" Terminal on Relay - Natural. (Order 57285 D)
43		Cable - "BAT" on Relay to Ammeter, Natural with Black and Red Cross Tracers. (Order 57285 D)
44	43035 D	Head Lamp.
45		Cable - "A" Terminal on Generator to "GEN" Terminal on Relay. Natural with Black Cross Tracers. (Order 57285 D)
46		"GEN" (Generator) Terminal on Relay.
47	52297 D	Relay.
48		"BAT" (Battery) Terminal on Relay.
49	57143 D	Clip - Under Relay Mounting Stud.
50	57062 DX	Cable - Right Head Lamp to Junction Block.
50A	1627 Y	Grommet in Radiator Grille
51	42923 D	Left Head Lamp.
53	28428 D	Clamp.
54	1627 Y	Grommet in Radiator Grille
55	42924 D	Right Head Lamp.

PART NUMBER	DESCRIPTION	SERIAL NUMBER

ELECTRIC LIGHTING AND STARTING (Special) (Delco-Remy)

(Machine Attachment)

ATTACHMENTS CONSIST OF UNIT PACKAGES AS LISTED BELOW

63324 D — STARTING ATTACHMENT ONLY (6 VOLT) (T-9) (STANDARD SEAT) (CONSISTS OF UNIT PACKAGES, 60486 DA AND 57030 D)
61119 D — STARTING ATTACHMENT ONLY (12 VOLT) (TD-9) (STANDARD SEAT) (CONSISTS OF UNIT PACKAGES, 57022 D AND 57029 D)

63325 D — LIGHTING ATTACHMENT ONLY (6 VOLT) (T-9) (STANDARD SEAT) (2 HEAD AND 1 REAR LAMP) (SIDE MOUNTING) (CONSISTS OF UNIT PACKAGES, 60487 D, 57030 D, 57013 D, 57015 D, 57165 D)
61122 D — LIGHTING ATTACHMENT ONLY (6 VOLT) (TD-9) (STANDARD SEAT) (2 HEAD AND 1 REAR LAMP) (SIDE MOUNTING) (CONSISTS OF UNIT PACKAGES, 57026 D, 57030 D, 57013 D, 57015 D 57165 D)

63326 D — STARTING AND LIGHTING ATTACHMENT (6 VOLT) (T-9) (STANDARD SEAT) (2 HEAD AND 1 REAR LAMP) (SIDE MOUNTING) (CONSISTS OF UNIT PACKAGES, 60486 DA, 57030 D, 57028 D, 57013 D, 57015 D AND 57165 D)
67327 D — STARTING AND LIGHTING ATTACHMENT (6 VOLT) (T-9) (HIGH SEAT) (2 HEAD AND 1 REAR LAMP) (TOP MOUNTING) (CONSISTS OF UNIT PACKAGES, 60486 DA, 57032 D, 57028 D, 2-57017 D, 57165 D)
251723 R91 — STARTING AND LIGHTING ATTACHMENT (SAME AS ATTACHMENT 67327 D) WITH 60489 D LIGHTING SWITCH TO TAIL LAMP CABLE AND 61032 D TAIL LAMP CABLE CLIP (LESS 57165 D REAR LAMP) (⊛ USED ON MODIFIED UNITS BUCYRUS-ERIE NO. 31)
61125 D — STARTING AND LIGHTING ATTACHMENT (12 VOLT) (TD-9) (STANDARD SEAT) (2 HEAD AND 1 REAR LAMP) (SIDE MOUNTING) (CONSISTS OF UNIT PACKAGES, 57022 D, 57029 D, 57027 D, 57014 D, 57016 D 57164 D)
67328 D — STARTING AND LIGHTING ATTACHMENT (12 VOLT) (TD-9) (HIGH SEAT) (2 HEAD AND 1 REAR LAMP) (TOP MOUNTING) (CONSISTS OF UNIT PACKAGES, 57022 D, 57031 D, 57027 D, 2-57018 D, 57164 D)
67674 D — STARTING AND LIGHTING ATTACHMENT (SAME AS ATTACHMENT 67328 D EXCEPT LESS 57164 D REAR LAMP, COMPLETE (⊛ USED ON MODIFIED UNITS BUCYRUS-ERIE NO. 30)

UNIT PACKAGES

KEY TO NUMBER IN CAPTION

1 - 57022 D — STARTING UNIT PACKAGE (12 VOLT) (TD-9) (USED WITH BATTERY UNIT PACKAGES 57029 D OR 57031 D)
2 - 60486 DA — STARTING UNIT PACKAGE (6 VOLT) (T-9) (USED WITH BATTERY UNIT PACKAGES 57030 D OR 57032 D)

3 - 57026 D — LIGHTING UNIT PACKAGE (6 VOLT) (TD-9) (USED WITH BATTERY UNIT PACKAGES 57030 D OR 57032 D PLUS LAMP UNIT PACKAGES, SEE PAGE 198)
4 - 57027 D — LIGHTING UNIT PACKAGE (12 VOLT) (TD-9) (TO BE USED WITH STARTING UNIT PACKAGE 57022 D)
5 - 57028 D — LIGHTING UNIT PACKAGE (6 VOLT) (T-9) (TO BE USED WITH STARTING UNIT PACKAGE 60486 DA)

6 - 57029 D — BATTERY LOCATION UNIT PACKAGE (12 VOLT) (STANDARD SEAT) (TD-9) (USED WITH STARTING UNIT PACKAGE 57022 D)
7 - 57030 D — BATTERY LOCATION UNIT PACKAGE (6 VOLT) (STANDARD SEAT) (USED WITH STARTING UNIT PACKAGE 60486 DA AND LIGHTING UNIT PACKAGE 50726 D OR 60487 D)
8 - 57031 D — BATTERY LOCATION UNIT PACKAGE (12 VOLT) (HIGH SEAT) (TD-9) (USED WITH STARTING UNIT PACKAGE, 57022 D)
9 - 57032 D — BATTERY LOCATION UNIT PACKAGE (6 VOLT) (HIGH SEAT) (USED WITH STARTING UNIT PACKAGE 60486 DA AND LIGHTING UNIT PACKAGES 50726 D OR 60487 D)

10 - 60487 D — LIGHTING UNIT PACKAGE (6 VOLT) (T-9) (USED WITH BATTERY UNIT PACKAGES 57030 D OR 57032 D PLUS LAMP UNIT PACKAGE, SEE PAGE 226)

NOTE - FLYWHEEL RING GEAR, 33817 DB IS NECESSARY WITH STARTING OR STARTING AND LIGHTING ATTACHMENTS APPLIED ON "TD-9" TRACTORS TDCB 501 TO 1994.

FLYWHEEL RING GEAR, 33817 DB IS STANDARD EQUIPMENT ON "TD-9" TRACTORS TDCB 1995 UP

FAN AND GENERATOR PULLEY HUB 8023 DX IS NECESSARY WITH LIGHTING, STARTING OR STARTING AND LIGHTING ATTACHMENTS APPLIED ON "TD-9" TRACTORS TDCB 501 TO 1994.

⊛ - FOR TABULATION OF MODIFICATIONS SEE INTRODUCTION PAGE.

PART NUMBER	DESCRIPTION	SERIAL NUMBER	PACKAGE USED ON 1	2	3	4	5	6	7	8	9	10
6572 DA	GENERATOR PULLEY		1		1							
6745 D	GENERATOR PULLEY HUB			1								1
6746 DX	GENERATOR PULLEY FLANGE			1								1
	SET SCREW, 1/4 x 7/8" N.C. HEADLESS (DOG POINT)			1								1
	HEX. JAM NUT, 1/4" N.C.			1								1
8592 D	GENERATOR BRACKET		1		1							
	CAP SCREW, 5/16 x 7/8" N.C. HEX. HEAD		1		1							
	CAP SCREW, 5/16 x 2" N.F. HEX. HEAD		1		1							
	CAP SCREW. 3/8 x 1" N.C. HEX. HEAD		2		2							
	HEX. NUT, 5/16" N.F.		1		1							
	LOCKWASHER, 5/16"		2		2							
	LOCKWASHER, 3/8"		2		2							
20903 D	BATTERY BOTTOM SUPPORT SPACER							4	4		4	

ATTACHMENTS

PART NUMBER	DESCRIPTION	SERIAL NUMBER	PACKAGE USED ON 1	2	3	4	5	6	7	8	9	10
27383 D	Cable Clamp, Long					2	2					
27385 D	Loom Clip, 1/4" (For 3/8" Bolt)		3	3	3							3
	Cap Screw, 3/8 x 1" N.C. Hex. Head		2	2	2							2
	Hex. Nut, 3/8" N.C.		2	2	2							2
	Lockwasher, 3/8"		2	2	2							2
27387 D	Double Loom Clip, 1/4" (For 3/8" Bolt)				1	1	1					1
27618 D	Battery to Ground Cable Loom Clamp Ring											1
27618 D	Starting Switch to Ammeter Cable Loom Clamp Ring		2	2								
28428 D	Cable Clamp, Short				4	2	2					4
29325 D	Loom Clip, 3/8" (For 3/8" Bolt)		1	1								
29325 D	Loom Clip, 3/8"				1	1	1					1
	Cap Screw, 3/8 x 3/4" N.C. Hex. Head				1	1	1					1
	Hex. Nut, 3/8" N.C.				1	1	1					1
	Lockwasher, 3/8"				1	1	1					1
30424 D	Battery to Ground Cable Loom (Order 42833 D or 49242 D)							1	1	1	1	
37976 D	Battery Bottom Rest Spring							4	4	4	4	
38815 D	Cable Harness Clip		1	1								
39779 D	Starting Switch to Ammeter Cable Loom		1	1								
41827 D	Battery Bottom Mounting Spacer (1/2" Extra Heavy Iron Pipe)							4	4	4	4	
42383 D	Ammeter		1	1	1							1
42833 D	Battery to Ground Cable with Terminal (Will Work for 57166 DX and 30424 D)							1	1			
42915 D	Head Lamp Junction Block				1	1	1					1
	Screw, No. 10 - 24 x 1/2" Round Head				1	1	1					1
	Hex. Nut, No. 10 - 24				1	1	1					1
	Lockwasher, No. 10				1	1	1					1
42916 D	Head Lamp Junction Block Bracket				1	1	1					1
42917 D	Head Lamp Junction Block, 42915 D with Bracket 42916 D				1	1	1					1
42918 D	Dash Lamp (Order 65534 D)				1	1	1					1
	Machine Bolt, No. 6 - 32 x 1/2" Round Head				2	2	2					2
	Hex. Nut, No. 6 - 32				2	2	2					2
	Lockwasher, No. 6				2	2	2					2
42922 DX	Lighting Switch, Complete (Order 57311 DY)											
	(See Detail List for Service Parts)	TCB 501 to 1639				1						

ATTACHMENTS

PART NUMBER	DESCRIPTION	SERIAL NUMBER	PACKAGE USED ON 1	2	3	4	5	6	7	8	9	10
47861 D	Starting Switch Lever		1	1								
47871 DA	Starting Motor (Delco-Remy No. 779)		1									
	Cap Screw, 3/8 x 1-1/8" N.C. Hex. Head		2									
	Cap Screw, 3/8 x 1-1/2" H.C. Hex. Head		1									
	Lockwasher, 3/8"		3									
47880 D	Generator (Delco-Remy No. 1101358)			1	1							1
	Cotter Pin, 3/32 x 1"			1	1							1
47885 D	Generator Relay (Delco-Remy No. 1116807)			1	1							1
	Cap Screw, 1/4 x 5/8" N.F. Hex. Head			2	2							2
	Hex. Nut, 1/4" N.F.			1	1							1
	Lockwasher, 1/4"			2	2							2
47890 DX	Lighting Switch, Complete (Order 57310 DY)											
	(See Detail List for Service Parts)	TCB 501 to 1639			1		1					1
49242 D	Battery to Ground Cable with Terminal											
	(Will Work for 57166 DX and 30424 D)									1	1	
49502 D	Generator Brace Bolt		1		1							
	Hex. Nut, 3/8" N.F.		1		1							
	Lockwasher, 3/8"		1		1							
49572 D	Loom Clip, 11/32" (For 5/16" Bolt)		1	1	1							1
50234 D	Battery Hold Down Rubber, Short							4	2			
50235 D	Battery Hold Down Rubber, Long							8	4	8	4	
51602 D	Generator (Delco-Remy No. 11-1726)		1									
	Cotter Pin, 3/32 x 1"		1									
52030 DX	Ammeter to Lighting Switch Cable with Loom and Terminals				1	1	1					1
52062 D	Seat Side Sheet Grommet							1	1			
52272 D	Choke Control Rod and Button			1								
	Cotter Pin, 1/16 x 3/8"			1								
52297 D	Generator Relay (Delco-Remy No. 1116808)		1									
	Cap Screw, 1/4 x 5/8" N.F. Hex. Head		2									
	Hex. Nut, 1/4" N.F.		2									
	Lockwasher, 1/4"		2									
65069 D	Fuel Filter Drip Pan (On Engines Equipped with IHC Injection Pump)		1									
	Cap Screw, 5/16 x 1/2" N.C Hex Head		2									
	Lockwasher, 5/16"		1									
	Washer, 11/32" I.D. x 11/16" O.D. x 16 Ga.		2									
52319 DB	Fuel Filter Drip Pan (On Engines Equipped with Bosch Injection Pump)		1									

ATTACHMENTS

PART NUMBER	DESCRIPTION	SERIAL NUMBER	PACKAGE USED ON 1	2	3	4	5	6	7	8	9	10
53177 DX	Battery Bottom Support with Clips								1			
	Cap Screw, 1/2 x 2-3/4" N.F. Hex. Head								4			
	Hex. Nut, 1/2" N.F.								4			
	Lockwasher, 1/2"								4			
	Steel Washer, 17/32" I.D. x 1-1/4" O.D. x No. 14 Ga.								4			
53215 D	Battery Cover Clamp Bolt, Inner							2	2	2	2	
	Wing Nut, 5/16" N.C.							2	2	2	2	
53216 DX	Battery Box Cover with Hold-Down Rubbers,											
	50234 D and 50235 D	TCB 501 to 2673							1		1	
53216 DAX	Battery Box Cover with Hold-Down Rubbers,											
	50234 D and 50235 D	TCB 2675 up							1		1	
53226 D	Starting Switch Rod Rear Holder		1	1								
53227 D	Starting Switch Rod Rear Holder Spring		1	1								
53732 D	Seat Cushion Side							1	1			
54067 DX	Battery Cover, Complete (Order 58002 DX)							1	1			
54069 D	Battery Cover Hinge							2	2			
	Cap Screw, 3/8 x 3/4" N.F. Hex. Head							2	2			
	Hex. Nut, 3/8" N.F.							2	2			
	Lockwasher, 3/8"							2	2			
54070 D	Battery Cover Hinge Rod							1	1			
54769 D	Battery Cover Clamp Bolt, Outer							2	2	2	2	
	Hex. Nut, 5/16" N.C.							4	4	4	4	
54855 DAX	Battery Bottom Support with Clips							1				
	Cap Screw, 1/2 x 2-1/2" N.F. Hex. Head							4				
	Hex. Nut, 1/2" N.F.							4				
	Lockwasher, 1/2"							4				
	Steel Washer, 17/32" I.D. x 1-1/4" O.D. x No. 14 Ga.							4				
54856 DA	Generator Brace		1		1							
	Cap Screw, 5/16 x 3/4" N.C. Hex. Head		1		1							
	Lockwasher, 5/16"		1		1							
	Steel Washer, 11/32" I.D. x 3/4" O.D. x No. 16 Ga.		1		1							
54857 DA	Generator Belt		1		1							
54858 D	Starting Switch Rod		1	1								
	Cotter Pin, 3/32 x 3/4"		1	1								
54860 D	Choke Control Rod and Button		1									
	Cotter Pin, 1/16 x 3/8"		1									
54861 DX	Battery Box Cover with Hold-Down Rubbers,											
	50234 D and 50235 D	TCB 501 to 2511						1		1		
54861 DAX	Battery Box Cover with Hold-Down Rubbers,											
	50234 D and 50235 D	TCB 2512 up						1		1		
54863 D	Generator Brace			1								1
	Cap Screw, 5/16 x 3/4" N.C. Hex. Head			2								2
	Lockwasher, 5/16"			2								2
54864 DX	Battery Bottom Support with Clips										1	
	Cap Screw, 1/2 x 2-1/4" N.C. Hex. Head										2	
	CapsScrew, 7/16 x 2-3/4" N.C. Hex Head										2	
	Steel Washer, 17/32" I.D. x 1-1/4" O.D. x No. 14 Ga.										4	

ATTACHMENTS

PART NUMBER	DESCRIPTION	SERIAL NUMBER	PACKAGE USED ON 1	2	3	4	5	6	7	8	9	10
54866 DX	Battery Bottom Support with Clips									1		
	Cap Screw, 1/2 x 2-1/4" N.C. Hex. Head									4		
	Steel Washer, 17/32" I.D. x 1-1/4" O.D. x No. 14 Ga.									4		
54867 D	Generator Belt			1								1
54871 DA	Starting Motor (Delco-Remy No. 1108903)			1								
	Cap Screw, 3/8 x 1-1/8" N.C. Hex. Head			2								
	Cap Screw, 3/8 x 1-1/2" N.C. Hex. Head			1								
	Lockwasher, 3/8"			3								
54872 D	Battery (Prest-O-Lite No. 613 SF)	TCB 501 to 2674			1							
55462 D	Battery (Willard No. SW4-136)(52662 VE Will Work)		2									
55463 D	Battery (Willard No. SW5-153)(53505 VE Will Work)			1								
55464 D	Battery (Willard No. SW2-105)(60910 DNS Will Work)				1							1
56504 D	Generator Relay Bracket		1	1	1							1
	Cap Screw, 1/4 x 3/4" N.F. Hex Head		1	1	1							1
	Lockwasher, 1/4"		1	1	1							1
56505 DA	Generator Relay Bracket Spacer		2	2	2							2
	Lockwasher, 5/16"		2	2	2							2
56511 DAX	Battery Spacer with Angles				1							1
57143 D	Cable Harness and Head Lamp Cable Clip				1	1	1					1
57146 D	Cable Harness and Head Lamp Cable Clip		2	2	2							2
57166 DX	Battery to Ground Cable with Loom, 30424 D and Clamp Ring, 27618 D (Order 42833 D or 49242 D)							1	1	1	1	
57275 D	Battery and Rear Lamp Cable Clip, Short				1					1	1	1
57276 D	Battery and Rear Lamp Cable Clip, Long		1	1	1							1
57279 D	Battery to Ammeter Cable, Complete				1							1
57281 D	Battery to Battery Cable with Insulating Tube and Terminals		1									
57283 DA	Battery to Starting Switch Cable, Complete		1	1								
57285 D	Cable Harness		1	1	1							1
57286 DX	Starting Switch to Ammeter Cable with Loom and Terminals		1	1								
57310 DY	Lighting Switch, Complete (Will Work for 47890 DX) (See Detail List for Service Parts)	TCB 1640 up			1		1					
57311 DY	Lighting Switch, Complete, (Will Work for 42922 DX) (See Detail List for Service Parts)	TCB 1640 up				1						
58002 DX	Battery Cover, Complete (Will Work for 54067 DX)							1	1			
59175 D	Dash Lamp (Order 65534 D)				1		1					

ATTACHMENTS

PART NUMBER	DESCRIPTION	SERIAL NUMBER	PACKAGE USED ON 1	2	3	4	5	6	7	8	9	10
60488 D	Generator Bracket			1								1
	Cap Screw, 5/16 x 1-1/8" N.F. Hex. Head			2								2
	Cap Screw, 1/2 x 1-1/4" N.C. Hex. Head			2								2
	Hex. Nut, 5/16" N.F.			2								2
	Lockwasher, 5/16"			2								2
	Lockwasher, 1/2"			2								2
60910 DNS	Battery (Auto-Lite OC-13-AR)(55464 D Will Work)	TCB 2675 up			1							1
65534 D	Dash Lamp (Will Work for 42918 D and 59175 D)					1						
7494 H	Dash Lamp Bulb (Mazda 63)				1		1					1
26453 HX	Battery Terminal Bolt with Nut, Complete		4	4								
28500 H	Ammeter to Lighting Switch Cable Insulating Tube				2	2	2					2
29939 H	Dash Lamp Bulb (Mazda 67)					1						
10789 V	Loom Clip, 7/16" (For 3/8" Bolt)				1	1	1					1
10815 V	Fuse (12 Volt)					1						
10815 VA	Fuse (6 Volt)				1		1					1
52662 VC	Battery (Prest-O-Lite 615 SF)	TCB 501 to 2511	2									
52662 VE	Battery (Auto-Lite OC-15-AR)(55462 D Will Work)	TCB 2512 up	2									
53505 VC	Battery (Prest-O-Lite 617 SF)	TCB 501 to 2511		1								
53505 VE	Battery (Auto-Lite OC-17-AR)(55463 D Will Work)	TCB 2512 up		1								

ELECTRIC LIGHTING AND STARTING (Special)

(Delco-Remy)

LAMP UNIT PACKAGES

KEY TO NUMBERS IN CAPTION

1 - 57013 D Head Lamp, L.H. (6 Volt)(Tractors without Bull Dozer)
2 - 57014 D Head Lamp, L.H. (12 Volt)(TD-9)(Tractors without Bull Dozer)

3 - 57015 D Head Lamp, R.H. (6 Volt)(Tractors without Bull Dozer)
4 - 57016 D Head Lamp, R.H. (12 Volt)(TD-9)(Tractors without Bull Dozer)

5 - 57017 D Head Lamp, L.H. and R.H. (6 Volt)(Tractors with Bull Dozer)
6 - 57018 D Head Lamp, L.H. and R.H. (12 Volt)(TD-9)(Tractors with Bull Dozer)

7 - 57039 D Tail Lamp (12 Volt)(TD-9)
8 - 57040 D Tail Lamp (6 Volt)

9 - 57164 D Rear Lamp (12 Volt)(TD-9)
10 - 57165 D Rear Lamp (6 Volt)

PART NUMBER	DESCRIPTION	SERIAL NUMBER	PACKAGE USED ON 1	2	3	4	5	6	7	[illegible]	[illegible]	10
22080 D	Tail Lamp Bracket								1	1		
	Cap Screw, 3/8 x 3/4" N.F. Hex. Head								2	2		
	Hex. Nut, 3/8"								2	2		
	Lockwasher, 3/8"								2	2		
27386 D	Rear Lamp Cable Clip								1	[illegible]		1
27404 D	Tail Lamp 29645 H with Plug, 27595 D											
	(See Detail List for Service Parts)									1		
27595 D	Tail Lamp Plug								1	1		
27618 D	Junction Block to Head Lamp Cable Loom Clamp Ring		2	2	2	2	2	2				
28428 D	Cable Clamp, Short		1	1								
38087 D	Tail Lamp, 29971 H with Plug, 27595 D											
	(See Detail List for Service Parts)			*					1			
42921 D	Head Lamp Bracket		2	2	2	2	2	2				
	Cap Screw, 1/2 x 1" N.C. Hex. Head		4	4	4	4	4	4				
	Lockwasher, 1/2"		4	4	4	4	4	4				
42921 D	Rear Lamp Bracket											1
	Cap Screw, 1/2 x 1" N.F. Hex Head											2
	Hex. Nut, 1/2" N.F.										2	2
	Lockwasher, 1/2"										2	2

ATTACHMENTS

PART NUMBER	DESCRIPTION	SERIAL NUMBER	PACKAGE USED ON 1	2	3	4	5	6	7	8	9	10
42923 D	HEAD LAMP, L.H. (GUIDE NO. 534 E)											
	(SEE DETAIL LIST FOR SERVICE PARTS)			1								
42924 D	HEAD LAMP, R.H. (GUIDE NO. 534 F)											
	(SEE DETAIL LIST FOR SERVICE PARTS)					1						
43035 D	HEAD LAMP, L.H. AND R.H. (GUIDE NO. 534 H)											
	(SEE DETAIL LIST FOR SERVICE PARTS)							2				
43035 D	REAR LAMP (GUIDE NO. 534 H)										1	
47924 D	HEAD LAMP, L.H. (GUIDE NO. 534 C)											
	(SEE DETAIL LIST FOR SERVICE PARTS)		1									
47925 D	HEAD LAMP, R.H. (GUIDE NO. 534 D)											
	(SEE DETAIL LIST FOR SERVICE PARTS)				1							
47926 D	HEAD LAMP, L.H. AND R.H. (GUIDE NO. 534 G)											
	(SEE DETAIL LIST FOR SERVICE PARTS)						2					
47926 D	REAR LAMP (GUIDE NO. 534 G)											1
57062 DX	JUNCTION BLOCK TO HEAD LAMP CABLE WITH LOOM, 57063 D AND TERMINALS											
	28500 H AND 2 CLAMP RINGS, 27618 D		1	1	1	1	1	1				
57063 D	JUNCTION BLOCK TO HEAD LAMP CABLE LOOM		1	1	1	1	1	1				
57277 D	LIGHTING SWITCH TO REAR LAMP CABLE WITH CASING AND 2 SLEEVES,											
	28500 H								1	1	1	1
60489 D	LIGHTING SWITCH TO TAIL LAMP CABLE, COMPLETE											
	(⊛ USED ON MODIFIED UNITS BUCYRUS-ERIE NO. 31)											1
61032 D	TAIL LIGHT CABLE CLIP (FOR 3/8" BOLT)											
	(⊛ USED ON MODIFIED UNITS BUCYRUS-ERIE NO. 31)											3
28500 H	LIGHTING SWITCH TO REAR LAMP CABLE INSULATING SLEEVE								2	2	2	2
29645 H	TAIL LAMP (GUIDE NO. 225-A)									1		
29971 H	TAIL LAMP (GUIDE NO. 225-A)								1			
1627 Y	RADIATOR GRILLE GROMMET (NOT TRACTORS WITH BULL DOZER)		2	2	2	2						

(⊛ - FOR TABULATION OF MODIFICATIONS SEE INTRODUCTION PAGE

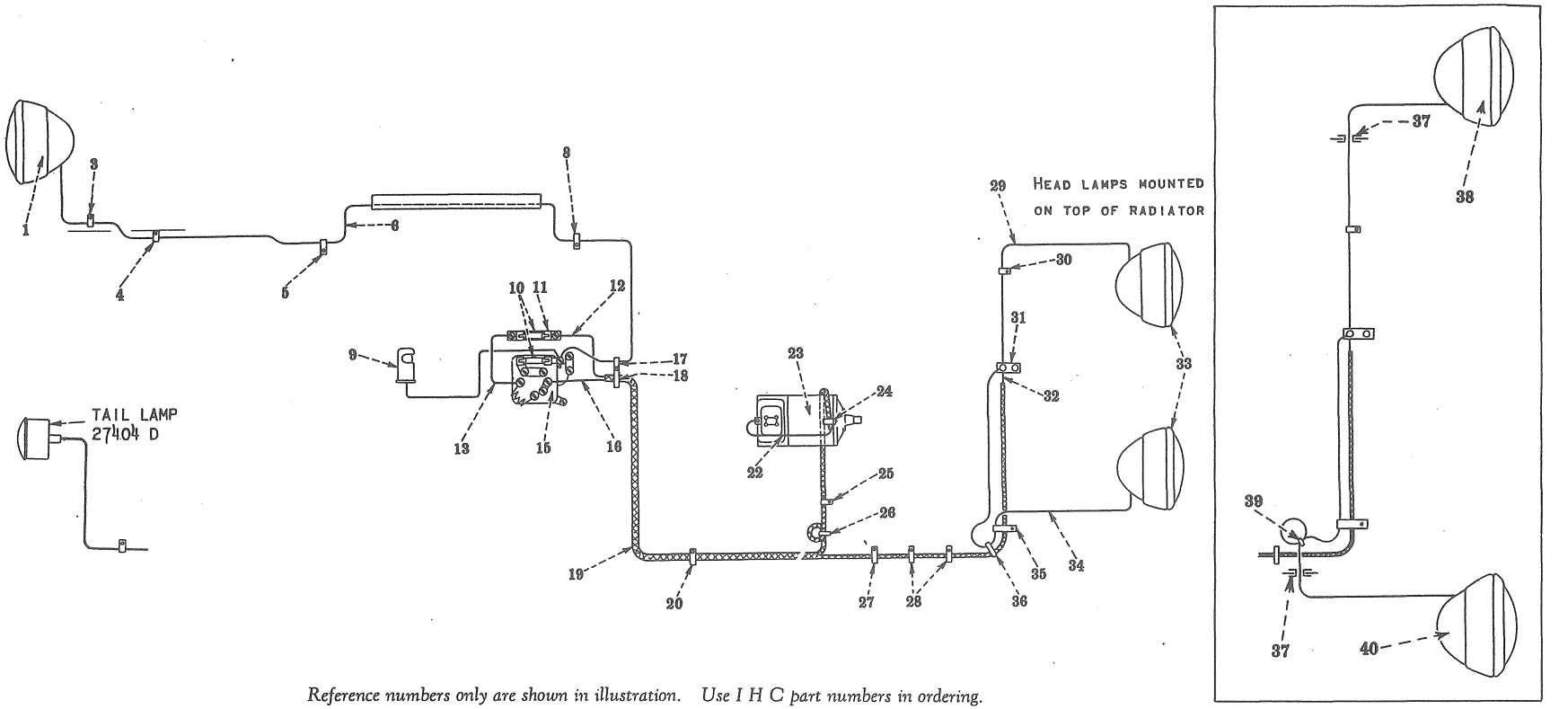

Reference numbers only are shown in illustration. Use I H C part numbers in ordering.

ELECTRIC LIGHTING—Special (Bosch No-Battery Generator)

INDEX TO REFERENCE NUMBERS IN ILLUSTRATION

REF. No.	I H C PART No.	DESCRIPTION
1	47926 D	REAR LAMP.
3	61812 D 62302 D	CLIP - ON FENDER MOUNTING CARRIAGE BOLT IN REAR BRACKET.
4	60938 D	CLIP - ON FENDER MOUNTING BOLT, SECOND FROM FUEL TANK.
5	61812 D 62302 D	CLIP - ON SHIFTER FORK HOUSING COVER CORNER BOLT.
6	57277 D	CABLE - SWITCH TO REAR LAMP.
8	52969 D	CLIP - ON ENGINE CLUTCH COVER, SECOND BOLT FROM REAR.
9	59175 D	DASH LAMP.
10	10815 V	FUSE.
11	7472 H	FUSE BLOCK.
12		CABLE - FUSE BLOCK TO JUNCTION BLOCK (BLACK)(ORDER 61831 D)
13	30747 DX	CABLE - SWITCH TO FUSE BLOCK.
15	61263 DX	LIGHTING SWITCH.
16		CABLE- SWITCH TO GENERATOR (NATURAL WITH BLACK AND RED CROSS TRACER) (ORDER 61831 D)
17	61813 D	CLIP - ON DASH.
18	60938 D	
19	61831 D	CABLE HARNESS.
20	60938 D	CLIP - ON SIDE ANGLE.
22		CABLE - SWITCH TO GENERATOR (NATURAL WITH BLACK AND RED CROSS TRACER) (ORDER 61831 D)
23	61875 D	GENERATOR.
24	61813 D	CLIP - ON GENERATOR BRACE BOLT.
25	61813 D	CLIP - ON LOWER OUTSIDE BOLT OF MAGNETO BRACKET.
26	28428 D	CLAMP.
27	60938 D	CLIP - ON SIDE ANGLE. USE 3/8 x 1" N.C. HEX. HEAD CAP SCREW, NUT AND LOCKWASHER.
28	58262 D	CLIP - ON FAN SHROUD BOLT.
29	57062 DX	CABLE - LEFT HEAD LAMP TO JUNCTION BLOCK.
30	60938 D	CLIP - ON LOWER BOLT OF GAS TANK.
31	42917 D	JUNCTION BLOCK.
32		CABLE - FUSE TO JUNCTION BLOCK (BLACK) (ORDER 61831 D)
33	47926 D	HEAD LAMP.
34	57062 DX	CABLE - RIGHT HEAD LAMP TO JUNCTION BLOCK.
35	57143 D	CLIP - ON FAN SHROUD BOLT.
36	28428 D	CLAMP.
37	1627 Y	GROMMET IN RADIATOR GRILLE.
38	47924 D	LEFT HEAD LAMP.
39	28428 D	CLAMP.
40	47925 D	RIGHT HEAD LAMP.

PART NUMBER	PACKAGE NO.	DESCRIPTION	SERIAL NUMBER	NO. REQ'D
		ELECTRIC LIGHTING—Special		
		(Bosch No-Battery Generator)		
61832 D		ELECTRIC LIGHTING ATTACHMENT (TWO HEAD LAMPS - ONE REAR LAMP)		
		(TRACTORS WITH BULL DOZER)(T-9)(MACHINE ATTACHMENT)		
61833 D		ELECTRIC LIGHTING ATTACHMENT (TWO HEAD LAMPS - ONE REAR LAMP)		
		(TRACTORS WITHOUT BULL DOZER)(T-9)(MACHINE ATTACHMENT)		
	1			
61834 D		ELECTRIC LIGHTING ATTACHMENT (TWO HEAD LAMPS - ONE TAIL LAMP)		
		(TRACTORS WITH BULL DOZER)(T-9)(MACHINE ATTACHMENT)		
61835 D		ELECTRIC LIGHTING ATTACHMENT (TWO HEAD LAMPS - ONE TAIL LAMP)		
		(TRACTORS WITHOUT BULL DOZER)(T-9)(MACHINE ATTACHMENT)		
61836 D		ELECTRIC LIGHTING ATTACHMENT (ONE HEAD LAMP - ONE REAR LAMP)		
		(TRACTORS WITH BULL DOZER)(T-9)(MACHINE ATTACHMENT)		
61837 D		ELECTRIC LIGHTING ATTACHMENT (ONE HEAD LAMP - ONE REAR LAMP)		
		(TRACTORS WITH BULL DOZER)(T-9)(MACHINE ATTACHMENT)		
	2			
61838 D		ELECTRIC LIGHTING ATTACHMENT (ONE HEAD LAMP - ONE TAIL LAMP)		
		(TRACTORS WITH BULL DOZER)(T-9)(MACHINE ATTACHMENT)		
61839 D		ELECTRIC LIGHTING ATTACHMENT (ONE HEAD LAMP - ONE TAIL LAMP)		
		(TRACTORS WITHOUT BULL DOZER)(T-9)(MACHINE ATTACHMENT)		
61840 D		ELECTRIC LIGHTING ATTACHMENT (TWO HEAD LAMPS - ONE REAR LAMP)		
		(TD-9)(TRACTORS WITH BULL DOZER)(MACHINE ATTACHMENT)		
61841 D		ELECTRIC LIGHTING ATTACHMENT (TWO HEAD LAMPS - ONE REAR LAMP)		
		(TD-9)(TRACTORS WITHOUT BULL DOZER)		
	3			
61842 D		ELECTRIC LIGHTING ATTACHMENT (TWO HEAD LAMPS - ONE TAIL LAMP)		
		(TD-9)(TRACTORS WITH BULL DOZER)(MACHINE ATTACHMENT)		
61843 D		ELECTRIC LIGHTING ATTACHMENT (TWO HEAD LAMPS - ONE TAIL LAMP)		
		(TD-9)(TRACTORS WITHOUT BULL DOZER)(MACHINE ATTACHMENT)		
61844 D		ELECTRIC LIGHTING ATTACHMENT (ONE HEAD LAMP - ONE REAR LAMP)		
		(TD-9)(TRACTORS WITH BULL DOZER)(MACHINE ATTACHMENT)		
61845 D		ELECTRIC LIGHTING ATTACHMENT (ONE HEAD LAMP - ONE REAR LAMP)		
		(TD-9)(TRACTORS WITHOUT BULL DOZER)(MACHINE ATTACHMENT)		
	4			
61846 D		ELECTRIC LIGHTING ATTACHMENT (ONE HEAD LAMP - ONE TAIL LAMP)		
		(TD-9)(TRACTORS WITH BULL DOZER (MACHINE ATTACHMENT)		
61847 D		ELECTRIC LIGHTING ATTACHMENT (ONE HEAD LAMP - ONE TAIL LAMP)		
		(TD-9)(TRACTORS WITHOUT BULL DOZER)(MACHINE ATTACHMENT)		

ATTACHMENTS

PART NUMBER	REF. NO.	DESCRIPTION	SERIAL NUMBER	PACKAGE USED ON 1	2	3	4
3281 DA		Generator Saddle		1	1	1	1
		Cap Screw, 3/8 x 3-1/2" N.F. Hex. Head		1	1	1	1
		Hex. Nut, 3/8" N.F.		1	1	1	1
		Lockwasher, 3/8"		1	1	1	1
6746 D		Generator Pulley Flange		1	1		
		Set Screw, 1/4 x 7/8" N.C. Headless (Dog Point)		1	1		
		Hex. Jam Nut, 1/4"		1	1		
9168 D		Generator Pulley				1	1
9172 D		Generator Pulley Hub		1	1		
9174 D		Generator Bracket (Order 63789 D)	TCB 501 to			1	1
		Cap Screw, 3/8 x 1-1/4" N.C. Hex. Head				2	2
		Lockwasher, 3/8"				2	2
9230 D		Generator Bracket		1	1		
		Cap Screw, 1/2 x 1-1/2" N.C. Hex. Head		2	2		
		Lockwasher, 1/2"		2	2		
9379 D		Generator Bracket	TCB up			1	1
		Cap Screw, 3/8 x 1-1/4" N.C. Hex. Head				2	2
		Lockwasher, 3/8"				2	2
23603 D		Generator Dowel Pin		1	1	1	1
26080 DB		Generator Strap		1	1	1	1
		Cap Screw, 1/4 x 2-3/4" N.F. Hex. Head		1	1	1	1
		Cap Screw, 5/16 x 1-1/2" N.C. Hex. Head		1	1	1	1
		Hex. Nut, 1/4" N.F.		1	1	1	1
		Lockwasher, 1/4"		1	1	1	1
		Lockwasher, 5/16"		1	1	1	1
27404 D		Tail Lamp, 29645 H with Plug, 27595 D (See Detail List for Service Parts)		1	1	1	1
27618 D		Loom Clamp Ring		6	6	6	6
28428 D		Loom Clamp		2	2	2	2
30747 DX		Fuse Block to Lighting Switch Cable with Loom,					
		30752 D and 2 Clamp Rings, 27618 D		1	1	1	1
30752 D		Fuse Block to Lighting Switch Cable Loom		1	1	1	1
38433 D		Cable Terminal		8	8	8	8

ATTACHMENTS

PART NUMBER	REF. NO.	DESCRIPTION	SERIAL NUMBER	PACKAGE UNION 1	2	3	4
42915 D		Head Lamp Junction Block		1	1	1	1
		Screw, No. 10 - 24 x 1/2" Round Head		1	1	1	1
		Hex. Nut, No. 10 - 24		1	1	1	1
		Lockwasher, No. 10		1	1	1	1
42916 D		Head Lamp Junction Block Bracket		1	1	1	1
42917 D		Head Lamp Junction Block, 42915 with Bracket, 42916 D		1	1	1	1
47924 D		Head Lamp, L. H. (Guide No. 534 C)(6-8 Volt)					
		(See Detail List for Service Parts)		1		1	
47925 D		Head Lamp, R.H. (Guide No. 534 D)(6-8 Volt)					
		(See Detail List for Service Parts)		1	1	1	1
47926 D		Head Lamp, L.H. and R.H. (Guide No. 534 G)(6-8 Volt)					
		(See Detail List for Service Parts)		2	2	2	2
47926 D		Rear Lamp (Guide No. 534 G)(6-8 Volt)					
		(See Detail List for Service Parts)		1	1	1	1
49502 D		Generator Brace Bolt				1	1
		Hex. Nut, 3/8" N.F.				1	1
		Lockwasher, 3/8"				1	1
52318 DA		Generator Belt	TCB UP			1	1
52969 D		Cable Clip (For 1/2" Bolt)		1	1	1	1
54857 DA		Generator Belt	TCB 501 to			1	1
54867 D		Generator Belt		1	1		
57062 DX		Junction Block to Head Lamp Cable with Loom,					
		57063 D, 2 Terminals, 38433 D and 2 Clamp Rings, 27618 D		2	2	2	2
57063 D		Junction Block to Head Lamp Cable Loom		2	2	2	2
57143 D		Cable Harness and Head Lamp Cable Clip		1	1	1	1
57277 D		Switch to Rear or Tail Lamp Cable		1	1	1	1
		Black Friction Tape, 3/4 x 12"		1	1	1	1
58262 D		Cable Clip (For 5/16" Bolt)		2	2	[illegible]	2
59175 D		Dash Lamp		1	1	1	1

ATTACHMENTS

PART NUMBER	REF. NO.	DESCRIPTION	SERIAL NUMBER	PACKAGE USED ON 1	2	3	4
60938 D		Cable Clip (For 3/8" Bolt)		5	5	5	5
		Cap Screw, 3/8 x 3/4" N.C. Hex. Head		3	3	3	3
		Hex. Nut, 3/8" N.C.		3	3	3	3
		Lockwasher, 3/8"		3	3	3	3
61263 DX		Lighting Switch, Complete (See Detail List for Service Parts)		1	1	1	1
61279 D		Generator Pulley Nut		1	1		
61281 D		Generator Bracket Brace	TCB 501 to			1	1
		Cap Screw, 5/16 x 3/4" N.C. Hex. Head				1	1
		Cap Screw, 3/8 x 7/8" N.C. Hex. Head				1	1
		Lockwasher, 5/16"				1	1
		Lockwasher, 3/8"				1	1
61283 D		Generator Brace	TCB 501 to	1	1		
		Cap Screw, 5/16 x 7/8" N.C. Hex. Head		1	1		
		Lockwasher, 5/16"		1	1		
		Steel Washer, 11/32" I.D. x 11/16" O.D. x No. 16 Ga.		1	1		
61812 D		Cable Clip (For 1/2" Bolt)(Will Work for 62302 D)		2	2	2	2
61813 D		Cable Clip (For 3/8" Bolt)		3	3	3	3
61831 D		Cable Harness		1	1	1	1
61868 D		Generator Brace		1	1		
		Cap Screw, 5/16 x 3/4" N.C. Hex. Head		2	2		
		Lockwasher, 5/16"		2	2		
61875 D		Generator, Bosch (No Battery Type)		1	1	1	1
62302 D		Cable Clip (For 1/2" Bolt)(Order 61812 D)		2	2	2	2
63787 D		Generator Bracket Brace	TCB up			1	1
		Cap Screw, 5/16 x 3/4" N.C. Hex. Head				1	1
		Cap Screw, 3/8 x 7/8" N.C. Hex. Head				1	1
		Lockwasher, 5/16"				1	1
		Lockwasher, 3/8"				1	1
63788 D		Generator Brace	TCB up			1	1
		Cap Screw, 5/16 x 7/8" N.C. Hex. Head				1	1
		Lockwasher, 5/16"				1	1
		Steel Washer, 11/32" I.D. x 11/16" O.D. x No. 16 Ga.				1	1
63789 D		Generator Mounting Package (Will Work for 59174 D)	TCB 501 to			1	1
7472 H		Fuse Block		1	1	1	1
7494 H		Dash Lamp Bulb (Mazda No. 63)		1	1	1	1
28500 H		Switch to Rear or Tail Lamp Cable Insulating Sleeve		2	2	2	2
10815 V		Fuse (No. 3 AC-10)		2	2	2	2
1627 Y		Radiator Grille Grommet (Not Tractors with Bull Dozer)		2	2	2	2

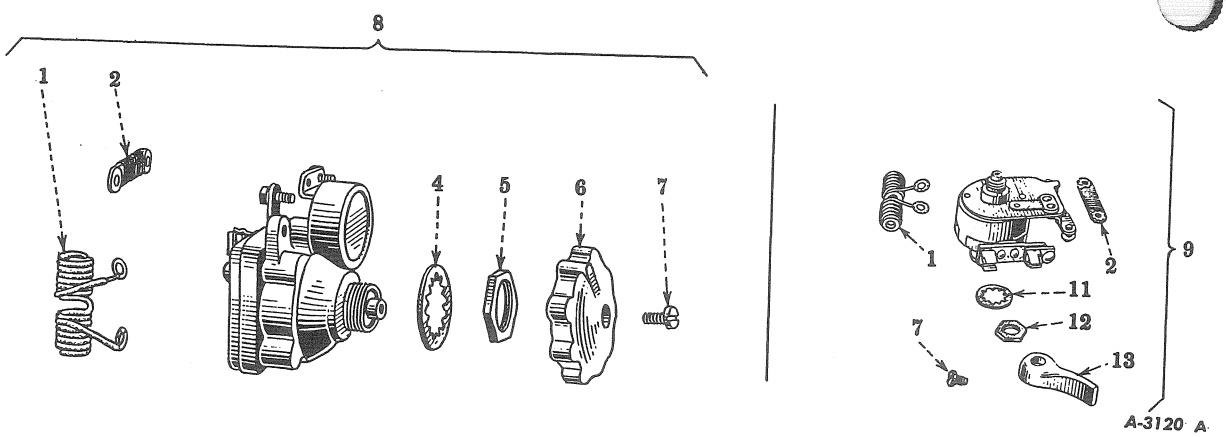

Reference numbers only are shown in illustration. Use I H C part numbers in ordering.

LIGHTING SWITCH

I H C PART NUMBER	REF. NO.	MFR'S. NUMBER	DESCRIPTION	SERIAL NUMBER	NO. REQ'D
43039 D	1	1877830	Switch Dimmer Resistance, 12 Volt		
			(Delco-Remy Lighting)		1
47889 D	1	814545	Switch Dimmer Resistance, 6 Volt		1
43040 D	2	1877831	Switch Generator Field Resistance, 12 Volt		
			(Delco-Remy Lighting)		1
47891 D	2	1878070	Switch Generator Field Resistance, 6 Volt (Not Bosch Lighting)		1
38767 D	4		Switch Mounting Nut Lockwasher		
			(Shakeproof No. 1222)(Delco-Remy Lighting)	TCB 501 to 1639	1
49425 H	4		Switch Mounting Nut Lockwasher (Shakeproof No. 1230)	TCB 1640 up	1
43036 D	5	1873327	Switch Mounting Nut (Delco-Remy Lighting)	TCB 501 to 1639	1
57312 D	5	1882012	Switch Mounting Nut	TCB 1640 up	1
57313 D	6	1882013	Switch Knob	TCB 1640 up	1
43038 D	7		Switch Handle Mounting Screw (Order 64022 H)		1
			Lockwasher, No. 8		1
64022 H	7	1864099	Switch Handle Mounting Screw (Will Work for 43038 D)		1
57310 DY	8		Switch, Complete (Will Work for 47890 DX)	TCB 1640 up	1
57311 DY	8		Switch, Complete (Will Work for 42922 DX)	TCB 1640 up	1
61263 DX	8		Switch, Complete, 6 Volt (Bosch Lighting)		1
42922 DX	9		Switch, Complete, 12 Volt (TD-9)(Order 57311 DY)		
			(Delco-Remy Lighting)	TCB 501 to 1639	1
47890 DX	9		Switch, Complete, 6 Volt (Order 57310 DY)		
			(Delco-Remy Lighting)	TCB 501 to 1639	1
43037 D	10	1873326	Switch Handle (Delco-Remy Lighting)	TCB 501 to 1639	1

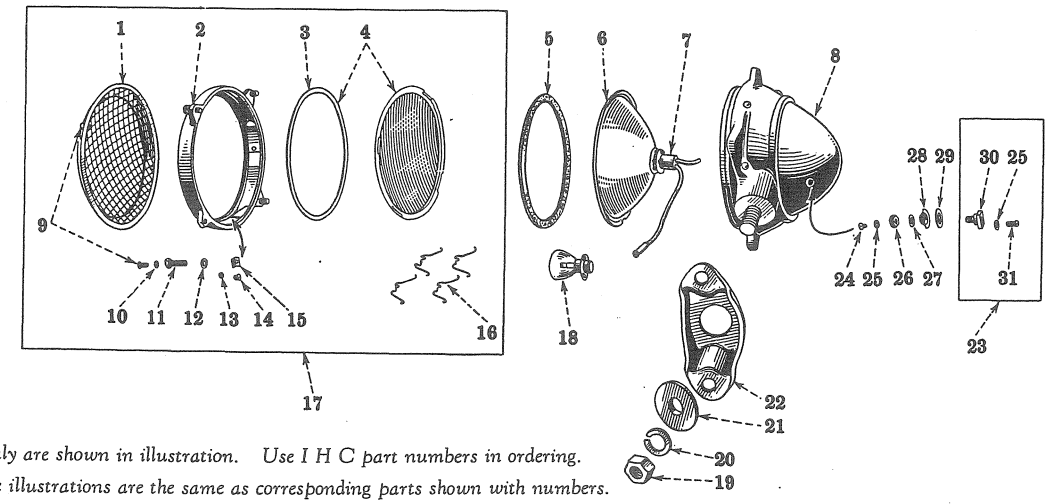

Reference numbers only are shown in illustration. Use I H C part numbers in ordering.
Unnumbered parts in the illustrations are the same as corresponding parts shown with numbers.

HEAD LAMPS AND REAR LAMPS (Guide Lamp Corporation)
(For Delco-Remy "Battery" and Bosch "No-Battery" Lighting Equipment)

51891 D	1	923756	Head and Rear Lamp Lens Guard with Washer, 41229 H	1	
	9	121839	Screw, No. 6 - 32 x 3/8" Round Head	4	
51889 D	2	923755	Head and Rear Lamp Door	1	
	11	121893	Cap Screw, 1/4 x 7/8" N.C. Hex. Head	4	
	12		Lockwasher, 1/4"	4	
51970 D	3	921636	Head and Rear Lamp Lens Gasket	1	
50784 D	4	921634	Head and Rear Lamp Lens with Gasket, 51970 D	1	
51892 D	5	921638	Head and Rear Lamp Door Seal Gasket	1	
51894 D	6	924079	Head and Rear Lamp Reflector	1	
51893 D	7	924023	Head and Rear Lamp Socket, Complete, with Wire	1	
51887 D	8	921627	Head and Rear Lamp Body, Complete	1	
	19	103030	Hex. Nut, 5/8" N.F.	1	
	20		Lockwasher, 5/8"	1	
	9		Follows Reference No. 1		
41229 H	10		Head and Rear Lamp Lens Guard Retaining Screw Washer		
			(Shakeproof No. 1206)	4	
	11,12		Follows Reference No. 2		
51898 D	15	924753	Head and Rear Lamp Lens Locating Clip	1	
	14	132684	Screw, No. 6 - 32 x 3/16" Oval Head	1	
	13	106495	Lockwasher, No. 6	1	
50539 H	16	914255	Head and Rear Lamp Lens Retaining Spring	4	
51888 D	17	923754	Head and Rear Lamp Door Guard, Complete, with Lens	1	
66339 H	18		Head and Rear Lamp Bulb, 6 Volt, 32 - 21 C.P.,		
			Double Contact (Mazda No. 2320)	1	
66340 H	18		Head and Rear Lamp Bulb, 12 Volt, 32 - 21 C.P.,		
			Double Contact (Mazda No. 2326)	1	
	19,20		Follows Reference No. 8		
36273 D	21	234869	Head and Rear Lamp Bracket Bearing Washer	X	
42921 D	22		Head and Rear Lamp Bracket	X	
			Cap Screw, 1/2 x 1" N.F. Hex. Head	2	
			Hex. Nut, 1/2" N.F.	2	
			Lockwasher, 1/2"	2	

X - as Required

ATTACHMENTS

I H C PART NUMBER	REF. NO.	MFR'S. NUMBER	DESCRIPTION	SERIAL NUMBER	NO. REQ'D
51895 D	23	924021	HEAD AND REAR LAMP TERMINAL PLATE, COMPLETE		1
	24		FOLLOWS REFERENCE NO. 31		
37077 D	25		HEAD AND REAR LAMP TERMINAL LOCKWASHER		
			(SHAKEPROOF NO. 1208)(ORDER 48716 H)		2
48716 H	25	138530	HEAD AND REAR LAMP TERMINAL LOCKWASHER		
			(SHAKEPROOF NO. 1208) (WILL WORK FOR 37077 D)		1
37063 D	26	134556	HEAD AND REAR LAMP TERMINAL NUT		1
	27		FOLLOWS REFERENCE NO. 31		
37072 D	28	918652	HEAD AND REAR LAMP TERMINAL CUP WASHER		1
37075 D	29	918653	HEAD AND REAR LAMP TERMINAL INSULATING WASHER		1
37064 D	30	918651	HEAD AND REAR LAMP TERMINAL PLATE		1
	31	115598	SCREW, NO. 8 - 32 x 1/2" ROUND HEAD		1
	24	115598	SCREW, NO. 8 - 32 x 1/4" ROUND HEAD		1
	27	112723	LOCKWASHER, 5/16"		1

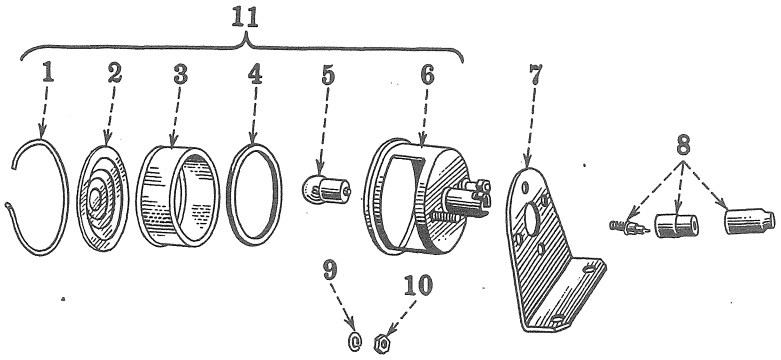

Reference numbers only are shown in illustration. Use I·H C part numbers in ordering.

TAIL LAMP (Guide Lamp Corporation)

11251 V	1		TAIL LAMP LENS RETAINING SPRING RING		1
16603 H	2	911505	TAIL LAMP GLASS (RUBY)		1
16661 H	3	911506	TAIL LAMP OUTLOOK GLASS (CLEAR)		1
16662 H	4	911502	TAIL LAMP OUTLOOK GLASS CORK WASHER		1
7494 H	5		TAIL LAMP BULB, 6 VOLT, 3 C.P., SINGLE CONTACT		
			(MAZDA NO. 63)		1
29939 H	5		TAIL LAMP BULB, 12 VOLT, 3 C.P., SINGLE CONTACT		
			(MAZDA NO. 67)		1
16660 H	6	911500	TAIL LAMP BODY, COMPLETE		1
	9		LOCKWASHER, 1/4"		2
	10		HEX. NUT, 1/4" N.C.		2
22080 D	7		TAIL LAMP BRACKET		1
			CAP SCREW, 3/8 x 3/4" N.C. HEX. HEAD		2
			HEX. NUT, 3/8" N.C.		2
			LOCKWASHER, 3/8"		2
27595 D	8		TAIL LAMP PLUG		1
29645 H	11	225-A	TAIL LAMP (6 VOLT)		1
29971 H	11	225-A	TAIL LAMP (12 VOLT)		1

DETAILS OF ASSEMBLY

PART NUMBER	DESCRIPTION	NO. USED PER ASSEMBLY
6482 DAY	FRAME, COMPLETE	
§ 6482 DA	FRAME	1
§ 8302 D	DRAIN BAFFLE	1
47454 D	FELT RETAINER, INNER	1
§ 47482 DA	POLE PIECE LAMINATION	78
§ 47483 DA	POLE PIECE SIDE PLATE, LH	2
§ 47484 DA	POLE PIECE SIDE PLATE, RH	2
§ 47485 D	BREAKER ARM POST	1
48472 D	CONDENSER HOLE COVER GASKET	1
§ 54279 D	POLE PIECE RIVET, LOWER	2
§ 54280 D	POLE PIECE RIVET, UPPER	6
55015 D	CONDENSER HOLE COVER	1
E4 226	BEARING FELT	1
E4A 352	ROTOR SHAFT BALL BEARING OUTER RACE	1
	SLOTTED SCREW, NO. 8-32 x 3/8" ROUND HEAD (CADMIUM PLATED)	2
	LOCKWASHER, NO. 8 (CADMIUM PLATED)	2
6483 DY	DISTRIBUTOR BODY, COMPLETE	
§ 6483 D	DISTRIBUTOR BODY	1
47408 D	DISTRIBUTOR BODY GASKET	1
47424 D	DISTRIBUTOR CAP LOCATING PIN	1
§ 47486	DISTRIBUTOR SHAFT	1
49423 D	DISTRIBUTOR BODY FELT SEAL	1
49424 D	DISTRIBUTOR BODY FELT RETAINER	1
51666 D	DISTRIBUTOR CAP SPRING	2
51667 D	DISTRIBUTOR CAP SPRING PIN	1
55855 D	DISTRIBUTOR CAP SPRING STOP PIN	1
E4 216	OIL WELL FELT	1
E4 295	OILER	1
6623 DAX	CRANKCASE FRONT COVER, COMPLETE	
§ 6623 DA	CRANKCASE FRONT COVER	1
13806 D	FRONT COVER HOUR METER PAD EXPANSION PLUG	1
46129 D	CRANKSHAFT FRONT OIL DEFLECTOR	1
48138 D	TIMING POINTER	1
53872 D	CRANKSHAFT FRONT OIL SEAL	1
6783 DX	MOUNTING FLANGE, COMPLETE	
§ 6783 D	MOUNTING FLANGE	1
27311 D	IMPULSE COUPLING OILER	1
47468 D	IMPULSE COUPLING STOP PIN	1
47473 D	OIL RETAINER WASHER, OUTER	1
47474 D	OIL RETAINER WASHER, INNER	1
47475 DA	OIL SEAL	1
E4A 352	ROTOR SHAFT BALL BEARING OUTER RACE	1

§ - NOT SUPPLIED SEPARATELY

PART NUMBER	DESCRIPTION	NO. USED PER ASSEMBLY
8101 DFX	Cylinder Head with Studs and Valve Guides	
§ 6608 D	Valve Guide (6608 DR For Service)	8
§ 8101 DF	Cylinder Head	1
§ 8744 D	Starting Valve Guide (8744 DR For Service)	4
32445 D	Valve Lever End Bracket Stud, Short	2
§ 46197 D	Cylinder Head Jet Cooling Tube	4
46199 D	Valve Lever Intermediate Bracket Stud, Long	2
46200 D	Valve Lever Intermediate and Center Bracket Stud, Short	3
48051 D	Valve Lever Center And End Bracket Stud, Long	3
50410 DA	Oil Header Plug	1
50677 D	Manifold Stud	10
54158 D	Nozzle Body Retainer Stud	8
23007 V	Cylinder Head Expansion Plug	2
	Pipe Plug, 3/8" Countersunk Head	4
	Pipe Plug, 1/2" Countersunk Head	2
	Pipe Plug, 3/4" Countersunk Head	4
8101 DFY	Cylinder Head, 8101 DFX with Valves and Springs	
8101 DFX	Cylinder Head with Studs and Valve Guides	1
46208 D	Starting Valve Spring Seat	4
46209 D	Starting Valve Spring Seat Key	8
46211 D	Starting Valve Spring	4
48053 D	Intake Valve	4
48054 D	Exhaust Valve	4
48055 D	Valve Stem Retainer	8
48056 DA	Valve Spring Seat	8
48057 D	Valve Spring Seat Key	16
48058 D	Starting Valve	4
61808 D	Valve Spring	8

§ - Not supplied separately

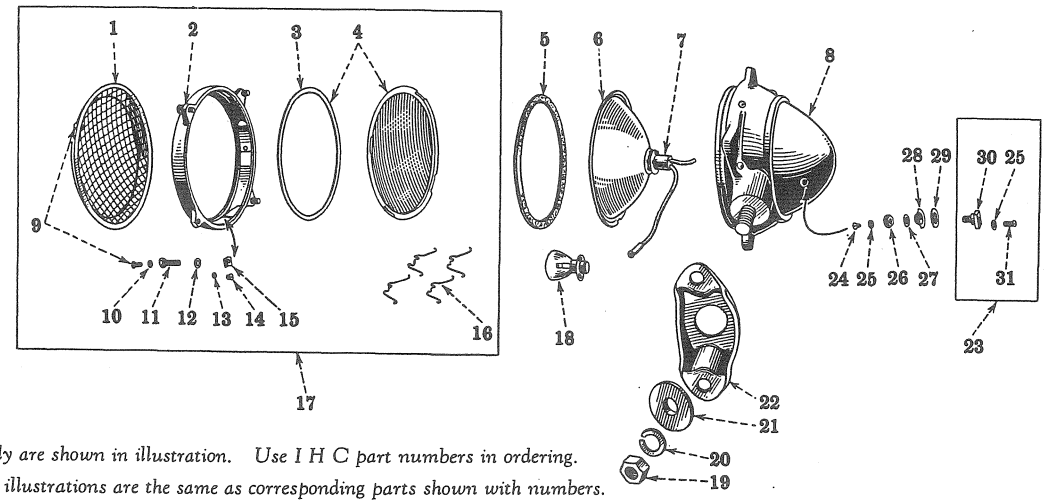

Reference numbers only are shown in illustration. Use I H C part numbers in ordering.
Unnumbered parts in the illustrations are the same as corresponding parts shown with numbers.

HEAD LAMPS AND REAR LAMPS (Guide Lamp Corporation)
(For Delco-Remy "Battery" and Bosch "No-Battery" Lighting Equipment)

51891 D	1	923756	Head and Rear Lamp Lens Guard with Washer, 41229 H	1	
	9	121839	Screw, No. 6 - 32 x 3/8" Round Head	4	
51889 D	2	923755	Head and Rear Lamp Door	1	
	11	121893	Cap Screw, 1/4 x 7/8" N.C. Hex. Head	4	
	12		Lockwasher, 1/4"	4	
51970 D	3	921636	Head and Rear Lamp Lens Gasket	1	
50784 D	4	921634	Head and Rear Lamp Lens with Gasket, 51970 D	1	
51892 D	5	921638	Head and Rear Lamp Door Seal Gasket	1	
51894 D	6	924079	Head and Rear Lamp Reflector	1	
51893 D	7	924023	Head and Rear Lamp Socket, Complete, with Wire	1	
51887 D	8	921627	Head and Rear Lamp Body, Complete	1	
	19	103030	Hex. Nut, 5/8" N.F.	1	
	20		Lockwasher, 5/8"	1	
	9		Follows Reference No. 1		
41229 H	10		Head and Rear Lamp Lens Guard Retaining Screw Washer		
			(Shakeproof No. 1206)	4	
	11,12		Follows Reference No. 2		
51898 D	15	924753	Head and Rear Lamp Lens Locating Clip	1	
	14	132684	Screw, No. 6 - 32 x 3/16" Oval Head	1	
	13	106495	Lockwasher, No. 6	1	
50539 H	16	914255	Head and Rear Lamp Lens Retaining Spring	4	
51888 D	17	923754	Head and Rear Lamp Door Guard, Complete, with Lens	1	
66339 H	18		Head and Rear Lamp Bulb, 6 Volt, 32 - 21 C.P.,		
			Double Contact (Mazda No. 2320)	1	
66340 H	18		Head and Rear Lamp Bulb, 12 Volt, 32 - 21 C.P.,		
			Double Contact (Mazda No. 2326)	1	
	19,20		Follows Reference No. 8		
36273 D	21	234869	Head and Rear Lamp Bracket Bearing Washer	X	
42921 D	22		Head and Rear Lamp Bracket	X	
			Cap Screw, 1/2 x 1" N.F. Hex. Head	2	
			Hex. Nut, 1/2" N.F.	2	
			Lockwasher, 1/2"	2	

X - as Required

ATTACHMENTS

I H C PART NUMBER	REF. NO.	MFR'S. NUMBER	DESCRIPTION	SERIAL NUMBER	NO. REQ'D
51895 D	23	924021	HEAD AND REAR LAMP TERMINAL PLATE, COMPLETE		1
	24		FOLLOWS REFERENCE NO. 31		
37077 D	25		HEAD AND REAR LAMP TERMINAL LOCKWASHER		
			(SHAKEPROOF NO. 1208)(ORDER 48716 H)		2
48716 H	25	138530	HEAD AND REAR LAMP TERMINAL LOCKWASHER		
			(SHAKEPROOF NO. 1208) (WILL WORK FOR 37077 D)		1
37063 D	26	134556	HEAD AND REAR LAMP TERMINAL NUT		1
	27		FOLLOWS REFERENCE NO. 31		
37072 D	28	918652	HEAD AND REAR LAMP TERMINAL CUP WASHER		1
37075 D	29	918653	HEAD AND REAR LAMP TERMINAL INSULATING WASHER		1
37064 D	30	918651	HEAD AND REAR LAMP TERMINAL PLATE		1
	31	115598	SCREW, NO. 8 - 32 x 1/2" ROUND HEAD		1
	24	115598	SCREW, NO. 8 - 32 x 1/4" ROUND HEAD		1
	27	112723	LOCKWASHER, 5/16"		1

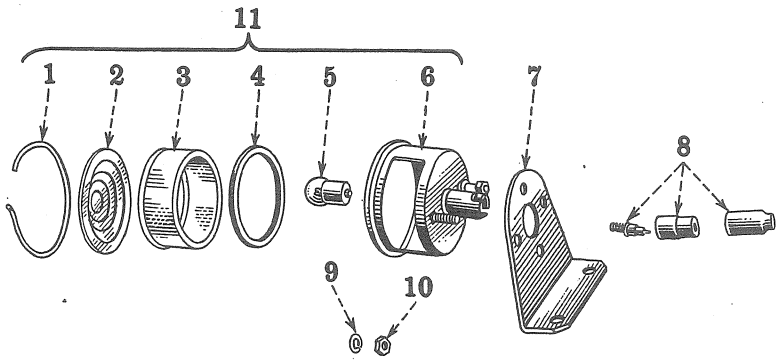

Reference numbers only are shown in illustration. Use I H C part numbers in ordering.

TAIL LAMP (Guide Lamp Corporation)

11251 V	1		TAIL LAMP LENS RETAINING SPRING RING		1
16603 H	2	911505	TAIL LAMP GLASS (RUBY)		1
16661 H	3	911506	TAIL LAMP OUTLOOK GLASS (CLEAR)		1
16662 H	4	911502	TAIL LAMP OUTLOOK GLASS CORK WASHER		1
7494 H	5		TAIL LAMP BULB, 6 VOLT, 3 C.P., SINGLE CONTACT		
			(MAZDA NO. 63)		1
29939 H	5		TAIL LAMP BULB, 12 VOLT, 3 C.P., SINGLE CONTACT		
			(MAZDA NO. 67)		1
16660 H	6	911500	TAIL LAMP BODY, COMPLETE		1
	9		LOCKWASHER, 1/4"		2
	10		HEX. NUT, 1/4" N.C.		2
22080 D	7		TAIL LAMP BRACKET		1
			CAP SCREW, 3/8 x 3/4" N.C. HEX. HEAD		2
			HEX. NUT, 3/8" N.C.		2
			LOCKWASHER, 3/8"		2
27595 D	8		TAIL LAMP PLUG		1
29645 H	11	225-A	TAIL LAMP (6 VOLT)		1
29971 H	11	225-A	TAIL LAMP (12 VOLT)		1

ATTACHMENTS

PART NUMBER	REF. NO.	DESCRIPTION	SERIAL NUMBER	PACKAGE USED ON 1	2	3	4
60938 D		Cable Clip (For 3/8" Bolt)		5	5	5	5
		Cap Screw, 3/8 x 3/4" N.C. Hex. Head		3	3	3	3
		Hex. Nut, 3/8" N.C.		3	3	3	3
		Lockwasher, 3/8"		3	3	3	3
61263 DX		Lighting Switch, Complete (See Detail List for Service Parts)		1	1	1	1
61279 D		Generator Pulley Nut		1	1		
61281 D		Generator Bracket Brace	TCB 501 to			1	1
		Cap Screw, 5/16 x 3/4" N.C. Hex. Head				1	1
		Cap Screw, 3/8 x 7/8" N.C. Hex. Head				1	1
		Lockwasher, 5/16"				1	1
		Lockwasher, 3/8"				1	1
61283 D		Generator Brace	TCB 501 to	1	1		
		Cap Screw, 5/16 x 7/8" N.C. Hex. Head		1	1		
		Lockwasher, 5/16"		1	1		
		Steel Washer, 11/32" I.D. x 11/16" O.D. x No. 16 Ga.		1	1		
61812 D		Cable Clip (For 1/2" Bolt)(Will Work for 62302 D)		2	2	2	2
61813 D		Cable Clip (For 3/8" Bolt)		3	3	3	3
61831 D		Cable Harness		1	1	1	1
61868 D		Generator Brace		1	1		
		Cap Screw, 5/16 x 3/4" N.C. Hex. Head		2	2		
		Lockwasher, 5/16"		2	2		
61875 D		Generator, Bosch (No Battery Type)		1	1	1	1
62302 D		Cable Clip (For 1/2" Bolt)(Order 61812 D)		2	2	2	2
63787 D		Generator Bracket Brace	TCB UP			1	1
		Cap Screw, 5/16 x 3/4" N.C. Hex. Head				1	1
		Cap Screw, 3/8 x 7/8" N.C. Hex. Head				1	1
		Lockwasher, 5/16"				1	1
		Lockwasher, 3/8"				1	1
63788 D		Generator Brace	TCB UP			1	1
		Cap Screw, 5/16 x 7/8" N.C. Hex. Head				1	1
		Lockwasher, 5/16"				1	1
		Steel Washer, 11/32" I.D. x 11/16" O.D. x No. 16 Ga.				1	1
63789 D		Generator Mounting Package (Will Work for 59174 D)	TCB 501 to			1	1
7472 H		Fuse Block		1	1	1	1
7494 H		Dash Lamp Bulb (Mazda No. 63)		1	1	1	1
28500 H		Switch to Rear or Tail Lamp Cable Insulating Sleeve		2	2	2	2
10815 V		Fuse (No. 3 AC-10)		2	2	2	2
1627 Y		Radiator Grille Grommet (Not Tractors with Bull Dozer)		2	2	2	2

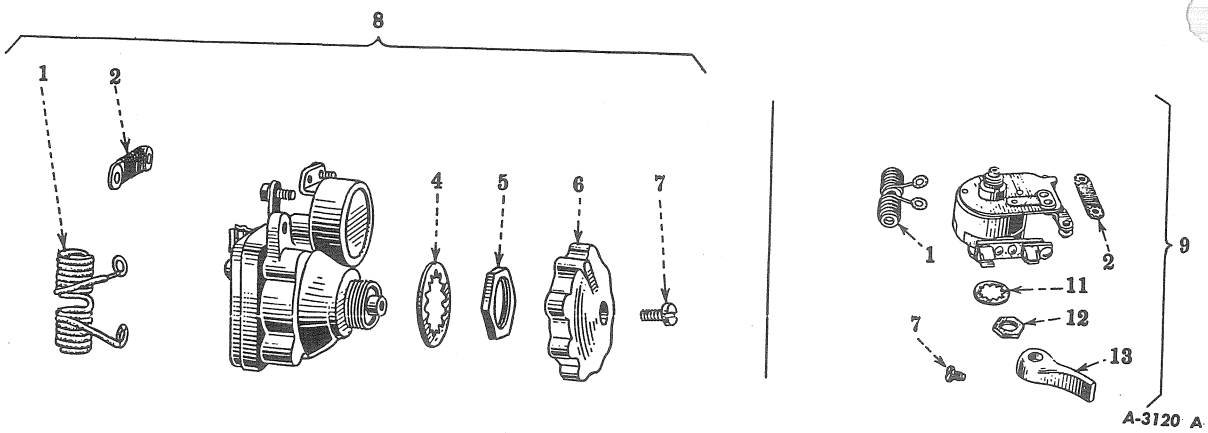

Reference numbers only are shown in illustration. Use I H C part numbers in ordering.

LIGHTING SWITCH

I H C PART NUMBER	REF. NO.	MFR'S. NUMBER	DESCRIPTION	SERIAL NUMBER	NO. REQ'D
43039 D	1	1877830	Switch Dimmer Resistance, 12 Volt		
			(Delco-Remy Lighting)		1
47889 D	1	814545	Switch Dimmer Resistance, 6 Volt		1
43040 D	2	1877831	Switch Generator Field Resistance, 12 Volt		
			(Delco-Remy Lighting)		1
47891 D	2	1878070	Switch Generator Field Resistance, 6 Volt (Not Bosch Lighting)		1
38767 D	4		Switch Mounting Nut Lockwasher		
			(Shakeproof No. 1222)(Delco-Remy Lighting)	TCB 501 to 1639	1
49425 H	4		Switch Mounting Nut Lockwasher (Shakeproof No. 1230)	TCB 1640 up	1
43036 D	5	1873327	Switch Mounting Nut (Delco-Remy Lighting)	TCB 501 to 1639	1
57312 D	5	1882012	Switch Mounting Nut	TCB 1640 up	1
57313 D	6	1882013	Switch Knob	TCB 1640 up	1
43038 D	7		Switch Handle Mounting Screw (Order 64022 H)		1
			Lockwasher, No. 8		1
64022 H	7	1864099	Switch Handle Mounting Screw (Will Work for 43038 D)		1
57310 DY	8		Switch, Complete (Will Work for 47890 DX)	TCB 1640 up	1
57311 DY	8		Switch, Complete (Will Work for 42922 DX)	TCB 1640 up	1
61263 DX	8		Switch, Complete, 6 Volt (Bosch Lighting)		1
42922 DX	9		Switch, Complete, 12 Volt (TD-9)(Order 57311 DY)		
			(Delco-Remy Lighting)	TCB 501 to 1639	1
47890 DX	9		Switch, Complete, 6 Volt (Order 57310 DY)		
			(Delco-Remy Lighting)	TCB 501 to 1639	1
43037 D	10	1873326	Switch Handle (Delco-Remy Lighting)	TCB 501 to 1639	1

PART NUMBER	DESCRIPTION	NO. USED PER ASSEMBLY
8124 DGX	Crankcase with Studs and Camshaft Bearings, Complete	
§ 8078 D	Crankshaft Bearing Cap, Rear	1
§ 8124 DG	Crankcase	1
§ 8225 D	Crankshaft Bearing Cap Front and Intermediate	3
§ 8226 DAX	Crankshaft Bearing Cap, Center	1
13231 D	Crankcase Front and Rear Expansion Plug	4
25086 DA	Rear Engine Support Dowel Pin	2
29565 D	Crankcase Distributor Hole Expansion Plug	1
39422 D	Crankshaft Bearing Cap Stud Nut Washer, Front, Intermediate and Rear	8
39423 D	Crankshaft Bearing Cap Stud Nut, Front, Intermediate and Rear	8
43113 D	Crankshaft Bearing Cap Stud, Front, Intermediate and Rear	8
46246 D	Crankshaft Bearing Cap Stud Nut Washer, Center	4
47840 D	Crankshaft Bearing Cap Stud, Center	4
47981 D	Cylinder Head Stud	18
49952 D	Rear Engine Support Stud	9
50410 DA	Oil Header Plug	6
50826 D	Cross Shaft Return Spring Pin	1
50827 D	Cross Shaft Bushing	2
§ 51305 DA	Camshaft Bearing, Front (51305 DAR For Service)	1
§ 51306 DA	Camshaft Bearing, No. 2 (51306 DAR For Service)	1
§ 51307 DA	Camshaft Bearing, No. 3 (51307 DAR For Service)	1
§ 51308 DA	Camshaft Bearing, Rear (51308 DAR For Service)	1
51329 D	Friction Control Disc Pin	1
52605 D	Crankcase Front Plate and Cover Dowel Pin	2
53643 D	Cross Shaft Latch Bracket Stud	1
13439 V	Camshaft Rear Bearing Expansion Plug	1
43598 V	Crankshaft Bearing Cap Stud Nut, Center	4
	Crankcase Locating Hole Plug (No. 6 Standard Cork, No.2X Grade, 9/16 x 3/4 x 15/16 Long)	2
	Pipe Plug, 1/8" Square Head (Oil Header)	1
	Pipe Plug, 3/8" Countersunk (Headless)	2
	Cotter Pin, 1/8 x 1-3/8"	12
8222 DAX	Oil Filter Base, Complete	
8222 DA	Fuel Filter Base	1
	Cap Screw, 3/8 x 1-1/2" N.C. Hex Head	2
	Cap Screw, 1/2 x 1-1/2" N.C. Hex Head	2
	Lockwasher, 3/8"	2
	Lockwasher, 1/2"	2
	Washer, 13/32" I.D. x 7/8" O.D. x No. 11 Ga.	2
8290 DAX	Exhaust and Intake Manifold, Complete	
19289 C	Exhaust and Intake Manifold Drain Hole Plug	1
§ 8290 DA	Exhaust and Intake Manifold	1
12215 D	Carburetor Stud	2
13806 D	Manifold Expansion Plug	2
46102 D	Manifold Heat Shield Stud	3
46202 D	Exhaust Pipe Stud	2

§ - Not supplied separately

PART NUMBER	DESCRIPTION	NO. USED PER ASSY.
8290 DAY	Exhaust and Intake Manifold with Heat Valve, Complete	
8290 DAX	Exhaust and Intake Manifold, Complete	1
8019 DA	Manifold Heat Control Valve	1
49045 DA	Manifold Heat Control Valve Shaft	1
57389 D	Manifold Heat Valve Groov Pin, 5/32 x 7/8" (Type No. 1)	1
	Set Screw, 3/8 x 1-1/4" N.C. Square Head (Cone Point)	1
	Hex Jam Nut, 3/8" N.C.	1
8291 DY	Lubricating Oil Pump Body, Complete	
8291 DX	Lubricating Oil Pump Body with Idler Shaft	1
13021 D	Lubricating Oil Pump Key	2
32316 D	Lubricating Oil Pump Drive Pinion Pin	1
32319 D	Lubricating Oil Pump Body Gear Pin	1
46595 DA	Lubricating Oil Pump Drive Pinion	1
52769 D	Lubricating Oil Pump Drive Shaft	1
52770 D	Lubricating Oil Pump Body Gear	1
8303 DX	Crankcase Front Cover, Complete	
§ 8303 D	Crankcase Front Cover	1
13806 D	Hour Meter Pad Expansion Plug	1
24517 D	Oil Filler Cap Stud	1
46129 D	Crankshaft Front Oil Deflector	1
53872 D	Crankshaft Front Oil Seal	1
55627 D	Oil Filler Screen	1
55628 D	Timing Pointer	
	Hex. Nut, 3/8" N.C.	1
8320 DBX	Cylinder Head with Studs and Valve Guides	
8292 D	Exhaust Valve Seat Insert	4
§ 8320 DB	Cylinder Head	1
§ 8322 D	Valve Guide (8322 DR For Service)	3
50338 D	Valve Lever Shaft Bracket Stud	4
§ 52777 DA	Cylinder Head Stud Sleeve	4
52778 D	Manifold to Cylinder Head Stud	4
52780 D	Valve Cover Stud	3
8320 DBY	Cylinder Head, 8320 DBX with Valves and Springs	
8320 DBX	Cylinder Head with Studs and Valve Guides	1
48055 D	Valve Stem Retainer	8
48056 DA	Valve Spring Seat	8
48057 D	Valve Spring Seat Key	16
52824 D	Intake Valve	4
52825 DA	Exhaust Valve	4
61808 D	Valve Spring	8
8321 DAX	Exhaust and Intake Manifold, Complete	
19289 C	Drain Hole Plug (Used with Power Units Only)	2
§ 8321 DA	Exhaust and Intake Manifold	1
12215 D	Carburetor Stud	2
	Pipe Plug, 1/8" Square Head	3

§ - Not supplied separately

PART NUMBER	DESCRIPTION	NO. USED PER ASSEMBLY
8323 DCX	CRANKCASE WITH STUDS AND CAMSHAFT BEARING, COMPLETE	
§ 8288 DAX	CRANKSHAFT BEARING CAP, CENTER WITH DOWEL PINS	1
§ 8289 D	CRANKSHAFT BEARING CAP, FRONT AND REAR	2
§ 8323 DC	CRANKCASE	1
13231 D	DISTRIBUTOR HOLE EXPANSION PLUG	1
13231 D	CRANKCASE WATER JACKET EXPANSION PLUG	4
13806 D	CRANKCASE WATER JACKET PLUG-SIDE	2
25086 DA	REAR ENGINE SUPPORT DOWEL PIN	2
29070 D	WATER HEADER STUD	3
46246 D	CRANKSHAFT BEARING CAP STUD WASHER	6
47840 D	CRANKSHAFT BEARING CAP STUD	6
49952 D	REAR ENGINE SUPPORT STUD	9
50410 DA	OIL HOLE CLEAN OUT PLUG	1
50410 DA	OIL HEADER PLUG	3
§ 51308 DA	CAMSHAFT BEARING, REAR (51308 DAR FOR SERVICE)	1
52605 D	CRANKCASE FRONT PLATE AND COVER DOWEL PIN	2
52789 D	CYLINDER HEAD STUD, SHORT	13
52790 D	CYLINDER HEAD STUD, LONG	6
§ 52796 DA	CAMSHAFT BEARING, FRONT (52796 DAR FOR SERVICE)	1
§ 52797 DA	CAMSHAFT BEARING, CENTER (52797 DAR FOR SERVICE)	1
54909 H	CRANKCASE MACHINE SCREW GASKET	2
13439 V	CAMSHAFT REAR BEARING EXPANSION PLUG	1
43598 V	CRANKSHAFT BEARING CAP STUD NUT	6
	CRANKCASE LOCATING HOLE PLUG (NO. 6 STANDARD CORK, NO. 2X GRADE, 9/16 x 3/4 x 15/16" LONG)	2
	SLOTTED SCREW, 5/16 x 1/2" N.C. ROUND HEAD	2
	DRIVE SCREW, NO. 14 x 1/2" (PARKER-KALON)	1
	COTTER PIN, 1/8 x 1-3/8"	6
	PIPE PLUG, 3/8", COUNTERSUNK HEAD	2
8323 DCZB	CRANKCASE, 8323 DCX WITH CYLINDER SLEEVES AND PISTONS, COMPLETE	
§ 8287 D	CYLINDER SLEEVE	4
8323 DCX	CRANKCASE WITH STUDS AND CAMSHAFT BEARINGS, COMPLETE	1
§ 9721 D	PISTON	4
§ 47643 DA	PISTON PIN	4
§ 47953 D	PISTON RING, OIL REGULATING	8
50956 D	PISTON RING, PLAIN COMPRESSION	8
52754 D	PISTON RING, TAPER COMPRESSION	4
31194 H	PISTON PIN RETAINER RING	8
8363 DBX	GOVERNOR HOUSING, COMPLETE	
§ 8363 DB	GOVERNOR HOUSING	1
13090 D	GOVERNOR SHAFT OPENING EXPANSION PLUG, 7/8"	1
45667 D	SPEED CHANGE SHAFT SEAL	1
48227 D	GOVERNOR HOUSING BUSHING	1
	CAP SCREW, 7/16 x 1" N.F. HEX HEAD	1
	LOCKWASHER, 7/16"	1

§ - NOT SUPPLIED SEPARATELY

PART NUMBER	DESCRIPTION	NO. USED IN ASSEMBLY
8479 DBX	CARBURETOR BODY, COMPLETE	
§ 8479 DB	CARBURETOR BODY	1
45110 D	STARTING LEVER STOP PIN	2
45148 D	DUST SEAL RETAINER	2
45149 D	DUST SEAL	2
8495 DBX	INTAKE MANIFOLD, COMPLETE	1
8495 DB	INTAKE MANIFOLD	1
50705 D	CARBURETOR STUD	4
53083 D	INTAKE MANIFOLD CONTROL SHAFT SEAL	2
54964 D	INTAKE MANIFOLD CONTROL SPRING STUD	2
G 1988	AIR CLEANER PIPE STUD	2
23007 V	INTAKE MANIFOLD EXPANSION PLUG	2
	CAP SCREW, 5/16 x 1/2" N.C. HEX. HEAD	2
	LOCKWASHER, 5/16"	2
	PIPE PLUG, 1/8" (HEADLESS)	2
8514 DBX	MAIN FRAME, COMPLETE	
6612 D	EQUALIZER SPRING PIVOT SHAFT CAP	1
§ 8514 DB	MAIN FRAME	1
45120 D	ENGINE CLUTCH RELEASE SHAFT BUSHING	2
46332 D	STEERING BRAKE OPERATING SHAFT BUSHING	4
41600 D	STEERING BRAKE PIVOT SHAFT CUP PLUG	2
53715 D	TRANSMISSION END COVER STUD	2
55539 D	DRIVE BEVEL GEAR BEARING CAGE STUD	4
57382 D	DRAWBAR GUIDE BRACKET STUD, LOWER	4
57383 D	DRAWBAR GUIDE BRACKET STUD, UPPER	2
	CAP SCREW, 7/8 x 2-1/4" N.C. HEX. HEAD	6
	LOCKWASHER, 7/8"	6
	CORK, 1/2 x 11/16 DIA. x 7/8" LONG	2
	CORK, 3/4 x 15/16 DIA. x 1-1/8" LONG	7
	CORK, 1 x 1-1/4" DIA. x 1-1/4" LONG	2
	PIPE PLUG, 1/2" SOCKET HEAD	1
	PIPE PLUG, 1-1/4" SOCKET HEAD	1
8917 DX	ODOMETER DRIVE HOUSING, COMPLETE	
§ 8917 D	ODOMETER DRIVE HOUSING	1
§ 26244 D	ODOMETER DRIVE HOUSING BUSHING	1
37574 D	ODOMETER DRIVE GEAR BEARING	1
6403 T	ODOMETER DRIVE HOUSING SLEEVE PIN	1
8944 DX	STEERING CLUTCH HAND LEVER, L.H., COMPLETE	
§ 8944 D	STEERING CLUTCH HAND LEVER, L.H.	1
41597 D	STEERING CLUTCH HAND LEVER HANDLE	1
42175 D	STEERING CLUTCH HAND LEVER BUSHING	2
59309 DX	STEERING CLUTCH OPERATING TURNBUCKLE EYE WITH LUBRICATOR, 59318 D	1
59310 D	STEERING CLUTCH OPERATING TURNBUCKLE EYE PIN	1
8945 DX	STEERING CLUTCH HAND LEVER, R.H., COMPLETE	
§ 8945 D	STEERING CLUTCH HAND LEVER, R.H.	1
41597 D	STEERING CLUTCH HAND LEVER HANDLE	1
42175 D	STEERING CLUTCH HAND LEVER BUSHING	2
59309 DX	STEERING CLUTCH OPERATING TURNBUCKLE EYE WITH LUBRICATOR, 59318 D	1
59310 D	STEERING CLUTCH OPERATING TURNBUCKLE EYE PIN	1

§ - NOT SUPPLIED SEPARATELY

PART NUMBER	DESCRIPTION	NO. USED PER ASSEMBLY
8970 DAXA	INJECTION PUMP HOUSING WITH STUDS, COMPLETE	
§ 8970 DA	PUMP HOUSING	1
8976 D	PUMP HOUSING BUSHING	1
§ 43360 D	CONTROL LEVER PLUG	1
45775 D	GOVERNOR FORK SHAFT NEEDLE BEARING	2
59604 D	DISTRIBUTOR VALVE TAPPET	4
59627 D	PLUNGER BUSHING RETAINER STUD	4
59636 D	PLUNGER TAPPET BUSHING	1
§ 59695 D	PUMP HOUSING PLUG, 1/4" DIAMETER	2
59722 D	CONTROL LEVER OIL SEAL	1
§ 61920 D	PUMP HOUSING PLUG, 3/16" DIAMETER	2
49353 H	CONTROL RACK PLUG (SUPPLIED LOOSE)	1
8970 DAY	PUMP HOUSING, COMPLETE	
8970 DAXA	INJECTION PUMP HOUSING, WITH STUDS, COMPLETE	1
25176 D	PUMP HOUSING BOTTOM PLATE SCREW GASKET	6
§ 66109 D	SCAVENGING VALVE AND BODY	1
§ 65027 D	SCAVENGING VALVE BODY GAP	1
65028 D	SCAVENGING VALVE BODY CAP GASKET	1
65029 D	SCAVENGING VALVE BODY SEAL	1
65056 D	PUMP HOUSING BOTTOM PLATE GAP SCREW	6
59610 D	DISTRIBUTOR BLOCK STUD	4
8974 DXA	PRIMARY PUMP HOUSING, COMPLETE	
§ 8974 D	PRIMARY PUMP HOUSING	1
59609 D	PRIMARY PUMP BEARING CAGE DOWEL	2
§ 59661 D	PRIMARY PUMP BY-PASS VALVE	1
§ 59662 D	PRIMARY PUMP BY-PASS VALVE SEAT	1
§ 59728 D	PRIMARY PUMP HOUSING PLUG	1
59730 D	PRIMARY PUMP BUSHING	2
59737 D	PRIMARY PUMP PACKING	1
59738 D	PRIMARY PUMP PACKING GLAND	1
59739 D	PRIMARY PUMP PACKING SPRING	1
§ 59745 D	PRIMARY PUMP BEARING CAGE	1
59746 DB	PRIMARY PUMP BEARING CAGE GASKET	1
59750 D	PRIMARY PUMP PACKING RETAINER	1
59751 D	PRIMARY PUMP IDLER GEAR SHAFT	1
67918 D	PRIMARY PUMP BY-PASS SPRING	1
9195 DAX	CYLINDER HEAD WITH STUDS AND VALVE GUIDES	
8292 D	EXHAUST VALVE SEAT INSERT	4
§ 8293 D	VALVE GUIDE (8293 DR FOR SERVICE)	8
§ 9195 DA	CYLINDER HEAD	1
50338 D	VALVE LEVER SHAFT BRACKET STUD	4
§ 52777 DA	CYLINDER HEAD STUD SLEEVE	4
52778 D	MANIFOLD TO CYLINDER HEAD STUD	6
52780 D	VALVE COVER STUD	3
9195 DAY	CYLINDER HEAD, 9195 DAX WITH VALVES AND SPRINGS	
9195 DAX	CYLINDER HEAD WITH STUDS AND VALVE GUIDES	1
48055 D	VALVE STEM RETAINER	8
48056 DA	VALVE SPRING SEAT	8
48057 D	VALVE SPRING SEAT KEY	16
61506 D	INTAKE VALVE	4
61507 D	EXHAUST VALVE	4
61808 D	VALVE SPRING	8

§ - NOT SUPPLIED SEPARATELY

DETAILS OF ASSEMBLY

PART NUMBER	DESCRIPTION	NO. USED PER ASSEMBLY
9411 DX	Distributor Body, Complete	
§ 9411 D	Distributor Body	1
47408 D	Distributor Body Gasket	1
47424 D	Distributor Cap Locating Pin	1
49423 D	Distributor Body Felt Seal	1
49424 D	Distributor Body Felt Retainer	1
51666 D	Distributor Cap Spring	2
51667 D	Distributor Cap Spring Pin	1
55855 D	Distributor Cap Spring Stop Pin	1
§ 63977 D	Distributor Shaft	1
E4 216	Oil Well Felt	1
E4 295	Oiler	1
9639 DX	Steering Clutch Hand Lever, L.H.	
§ 9639 D	Steering Clutch Hand Lever, L.H.	1
42175 D	Steering Clutch Hand Lever Bushing	2
59309 DX	Steering Clutch Operating Turnbuckle Eye with Lubricator	1
59310 D	Steering Clutch Operating Turnbuckle Eye Pin	1
9640 DX	Steering Clutch Hand Lever, R.H.	
§ 9640 D	Steering Clutch Hand Lever, R.H.	1
42175 D	Steering Clutch Hand Lever Bushing	2
59309 DX	Steering Clutch Operating Turnbuckle Eye with Lubricator	1
59310 D	Steering Clutch Operating Turnbuckle Eye Pin	1
9411 DY	Distributor, Complete	
9411 DX	Distributor Body, Complete	1
47417 DX	Rotor Pinion	1
49416 DX	Distributor Gear Cover, Complete	1
49420 D	Distributor Gear, 24 Teeth	1
	Slotted Screw, No. 8-32 x 1/2" Round Head (Cadmium Plated)	
	Lockwasher, No. 8 (Cadmium Plated)	2
19329 D	Socket Wrench Set and Carrying Case, Complete	
19289 D	Hexagon Socket Wrench, 9/16"	1
19291 D	Hexagon Socket Wrench, 5/8"	1
19292 D	Hexagon Socket Wrench, 3/4"	1
19323 D	Socket Wrench Handle (Combination Offset and "T")	1
19324 D	Hexagon Socket Wrench, 7/8"	1
19325 D	Hexagon Socket Wrench, 13/16"	1
19326 D	Hexagon Socket Wrench, 1"	1
19327 D	Hexagon Socket Wrench, 1-1/8"	1
19328 D	Socket Wrench Set Carrying Case	1
27159 DB	Hood Side Door Latch, Complete	
8815 D	Hood Fastener Spring Holder	1
8816 D	Hood Fastener Toggle	1
8817 D	Hood Fastener Bracket	1
58099 DA	Hood Fastener Spring Bolt	1
64159 D	Hood Fastener Spring	1
58101 D	Hood Fastener Spring Bolt Guide	1
58103 D	Hood Fastener Toggle Pin	1
G 9210	Hood Fastener Spring Holder Pin	1
	Hex. Nut, 5/16" N.C.	1

§ - Not supplied separately

PART NUMBER	DESCRIPTION	NO. USED PER ASSEMBLY
35691 D	FUEL BOWL, COMPLETE	
5051 DX	FUEL BOWL WITH SPACER, 32604 D	1
OR		
9390 DX	FUEL BOWL WITH SPACER, 32604 D	1
18377 D	STRAINER SCREEN GASKET	1
25948 D	FLOAT LEVER PIVOT SCREW GASKET	1
29902 DX	STRAINER SCREEN RETAINER WITH SCREEN	1
32576 DX	FLOAT LEVER PIVOT SCREW	1
32581 DXA	NEEDLE VALVE AND CAGE WITH GASKET, 25948 D	1
53079 D	FLOAT AND LEVER, COMPLETE	1
	SLOTTED SCREW, No. 4-36 x 3/8" ROUND HEAD (CADMIUM PLATED)	1
37152 D	NOZZLE VALVE AND SPRING, COMPLETE	
§ 37144 DA	NOZZLE VALVE	1
§ 27145 DA	NOZZLE VALVE GUIDE	1
§ 37146 D	NOZZLE SPRING	1
§ 37147 D	NOZZLE VALVE NUT	2
39800 D	NOZZLE, COMPLETE	
39652 D	NOZZLE BODY	1
39653 D	NOZZLE CAP	1
39656 DX	SET OF TWO LINPACK WASHERS	2
43248 D	SET OF SIX CAM BLOCKS, COMPLETE	
§ 31231 D	CAM BLOCK	6
54953 D	SCREW LOCK	6
	SCREW, 1/4-20 x 1/2" N.C. FILLISTER HEAD	6
46308 DBX	GASOLINE TANK, COMPLETE WITH FILLER CAP	
23995 DA	GASOLINE TANK FILLER CAP	1
§ 31781 D	GASOLINE TANK FILLER NECK	1
§ 39500 D	GASOLINE TANK OUTLET FLANGE	1
§ 46308 DB	GASOLINE TANK	1
§ 46309 DA	GASOLINE TANK BODY	1
§ 46310 DA	GASOLINE TANK END MOUNTING	1
§ 46311 D	GASOLINE TANK END, PLAIN	1
47425 DY	DISTRIBUTOR ROTOR, COMPLETE	
47425 DX	DISTRIBUTOR ROTOR	1
47427 D	DISTRIBUTOR ROTOR NUT	1
47428 D	DISTRIBUTOR ARM	1
	LOCKWASHER, No. 6 (CADMIUM PLATED)	1
47431 DB	BREAKER ARM, COMPLETE	
§ 21373 DBX-1	BREAKER ARM AND POINT, COMPLETE	1
§ 21375 DA	BREAKER RUBBING BLOCK	1
§ 21376 D	BREAKER SPRING RIVET	1
§ 21377 DA	BREAKER ARM BUSHING	1
§ 47430 D	BREAKER ARM SPRING	1

§ - NOT SUPPLIED SEPARATELY

PART NUMBER	DESCRIPTION	NO. USED IN ASSEM.
47433 DX	PRIMARY LEADOUT, COMPLETE	
§ 47433 D	PRIMARY LEADOUT WIRE	1
§ 49445 D	PRIMARY LEADOUT INSULATING TUBE	1
§ 49446 D	PRIMARY LEADOUT GROMMET	1
§ 49447 D	PRIMARY LEADOUT TERMINAL	1
§ 49448 D	PRIMARY TO CONDENSER LEADOUT TERMINAL	1
47439 DAX	COIL AND CORE, COMPLETE	
§ 21314 D	COIL CORE	1
49593 D	COIL END INSULATOR	2
	SLOTTED SCREW, No. 8 - 32 x 5/8" FLAT HEAD	2
§ 57926 D	COIL	1
47449 DAY	COIL COVER WITH SECONDARY LEADOUT, COMPLETE	
§ 47449 DA	COIL COVER	1
47452 D	SECONDARY LEADOUT,	1
E4A-546	SECONDARY LEADOUT SCREW	1
	LOCKWASHER, No. 4 (CADMIUM PLATED)	1
§ 47451 D	COIL COVER INSERT	1
48150 DC	RADIATOR, COMPLETE	
6624 DA	RADIATOR CORE SPACER, L.H.	1
6625 DA	RADIATOR CORE SPACER, R.H.	1
6626 DX	WATER TANK, UPPER WITH FILLER NECK, 43891 DA	1
6627 DA	WATER TANK, LOWER	1
26143 D	RADIATOR OVERFLOW PIPE CLIP	1
42605 D	RADIATOR DRAIN COCK	1
48157 DX	RADIATOR OVERFLOW PIPE WITH SLEEVE	1
48158 D	RADIATOR CORE STIFFENER, UPPER REAR	1
48159 D	RADIATOR CORE STIFFENER, LOWER REAR	1
48160 D	RADIATOR CORE STIFFENER, FRONT	2
48164 D	RADIATOR GASKET	2
48165 DA	RADIATOR CORE, COMPLETE	1
	CAP SCREW, 5/16 x 3/4" N.C. HEX. HEAD	1
	CAP SCREW, 5/16 x 7/8" N.C. HEX. HEAD	28
	CAP SCREW, 7/16 x 1-1/4" N.C. HEX. HEAD	12
	CAP SCREW, 7/16 x 1-1/2" N.C. HEX. HEAD	4
	LOCKWASHER, 5/16"	29
	LOCKWASHER, 7/16"	16
48151 DA	RADIATOR GRILLE, COMPLETE	
§ 43146 D	NAME PLATE SUPPORT	2
§ 48146 D	RADIATOR GRILLE CENTER STRIP	1
§ 48147 D	RADIATOR GRILLE REINFORCING STRIP	2
§ 48148 D	RADIATOR GRILLE, L.H.	1
§ 48149 D	RADIATOR GRILLE, R.H.	1
49076 D	RADIATOR GRILLE SCREEN	1
§ 58161 D	RADIATOR GRILLE SCREEN FASTENER, CENTER	10
§ 58161 D	RADIATOR GRILLE SCREEN FASTENER, SIDE	10
§ 58164 D	RADIATOR GRILLE SCREEN FASTENER, END	2

§ - NOT SUPPLIED SEPARATELY

PART NUMBER	DESCRIPTION	NO. USED PER ASSEMBLY
48256 DAX	Governor Weights with Carrier, Complete	
13085 D	Governor Gear and Governor Weight Carrier Key	1
45655 D	Governor Weight	2
45656 D	Governor Weight Pin	2
48255 D	Governor Shaft	1
48256 DA	Governor Weight Carrier	1
48671 D	Radiator Shutter (Hardy Mfg. Corporation), Complete	
47530 D	Bell Crank and Operating Link Spring	1
56125 D	Shutter and Operating Bar, Complete	1
56126 D	Frame and Bearing Bar, Complete	1
56127 D	Bearing Carrier, Complete	1
56128 D	Shutter Unit, Complete	1
	Screw, No. 10-32 x 3/8" Round Head	5
	Hex Nut, No. 10-32	5
	Lockwasher, No. 10	5
48848 D	Hood Side Door Attachment	
51550 DX	Hood Side Door, L.H., Complete	1
51551 DX	Hood Side Door, R.H., Complete	1
52272 D	Choke Control Rod and Button (T-9)	1
54860 D	Choke Control Rod and Button (TD-9)	1
	Cotter Pin, 1/16 x 1/2"	1
49090 DXR	Rotor, Complete	
21342 D	Breaker Cam Key	1
§ 47456 D	Magnet	1
§ 47457 D	Rotor Shaft	1
§ 47521 D	Rotor	1
57314 D	Magnet Keeper	1
60094 D	Breaker Cam	1
E4 212	Rotor Shim, Medium	2
E4A 305	Rotor Shim, Light	2
E4A 324	Oil Flinger	2
E4A 351	Rotor Shaft Ball Bearing Inner Race	2
E4A 353	Rotor Shaft Ball Bearing Retainer and Balls	2
E4A 372	Rotor Shim, Heavy	2
4167 T	Rotor Shaft Key (Woodruff No. 3-1/8 x 1/2")	1
49091 DY	Magneto Member with Pawls, Complete	
47461 D	Pawl Pin Washer	2
47462 D	Pawl Pin Snap Ring	2
49091 DX	Magneto Member	1
49092 D	Pawl	2

§ - Not Supplied Separately

PART NUMBER	DESCRIPTION	NO. USED IN ASSEMBLY
49091 DZ	Rotating Unit, Complete	
47294 D	Coupling Felt Retainer	1
47464 D	Spring Lubricating Wick	1
47465 D	Spring End Button	2
47822 D	Magneto Coupling Spring	1
49091 DY	Magneto Member with Pawls, Complete	1
49093 DX	Drive Member	1
49185 D	Fan and Water Pump, Complete	
2369 DX	Fan and Water Pump Hub with Oil Seal	1
2370 DAX	Fan and Water Pump Pulley Flange, Complete	1
6518 DAX	Water Pump Impelier with Shaft and Thrust Washer	1
20293 D	Water Pump Bearing Lock Sleeve	1
20296 D	Water Pump Packing Gland	1
20299 D	Water Pump Bearing Clamp Nut	1
20300 D	Water Pump Felt Washer	1
20301 D	Water Pump Driving Stud	2
20306 DX	Water Pump Bearing Retainer with Oil Seal	1
20585 D	Water Pump Driver	1
20586 D	Water Pump Driver Pin	1
21259 D	Fan	1
21839 D	Water Pump Bearing Retainer Gasket	1
45993 D	Water Pump Bearing Spacer	1
68315 D	Water Pump Body with Sleeve, 45982 DX	1
G 3792	Water Pump Drive Spring	2
Q 3615	Water Pump Bearing Lubricator	1
QA 3628	Water Pump Shaft Lubricator	1
ST 205 A	Water Pump Bearing (IHC)	2
	Cap Screw, 5/16 x 1" N.C. Hex. Head	2
	Hex. Nut, 5/16" N.F.	1
	Lockwasher, 5/16"	5
49416 DX	Distributor Gear Cover, Complete	
§ 49416 D	Distributor Gear Cover	1
49417 D	Distributor Gear Cover Felt Retainer	1
49418 D	Distributor Gear Cover Felt Seal	1
49419 D	Distributor Gear Cover Gasket	1
50760 D	Radiator Shutter Control Crank Bracket, Complete	
§ 50761 D	Radiator Shutter Control Crank Bracket	1
§ 50762 D	Radiator Shutter Control Crank Threaded Collar	1
50767 D	Radiator Shutter Control Crank Threaded Collar Pin	1
	Carriage Bolt, 1/4 x 3/4" N.C.	2
	Hex. Nut, 1/4" N.C.	2
	Lockwasher, 1/4"	2
51233 D	Magneto Short Circuiting Cable, Complete	
27618 D	Magneto Short Circuiting Cable Reinfrocement	3
§ 51233-1/2 D	Magneto Short Circuiting Cable	1
§ 51234 D	Magneto Short Circuiting Cable Grommet	1
1924 T	Magneto Short Circuiting Cable Terminal	2

§ - Not supplied separately

PART NUMBER	DESCRIPTION	NO. USED PER ASSEMBLY
51524 D	Driven Member, Complete	
50413 D	Tubular Rivet	24
§ 50418 D	Oil Deflector	1
§ 50421 D	Rivet	12
§ 50422 D	Clutch Plate	1
§ 50435 D	Splined Center	1
55233 DX	Clutch Facing (2 Facings)	1
51550 DX	Hood Side Door, L.H., Complete	
27159 DB	Hood Side Door Latch	2
§ 48846 D	Hood Side Door Reinforcing Strip	1
§ 48847 D	Hood Side Door Stiffener	2
§ 50916 D	Hood Door Fastener Clip	2
§ 51550 D	Hood Side Door, L.H.	1
	Rivet, 3/16 x 5/8" Round Head	6
51551 DX	Hood Side Door, R.H., Complete	
	(Same as 51550 DX, Except--)	
§ 51551 D	Hood Side Door, R.H. (Instead of 51550 D)	1
51732 D	Locking Shaft and Lever, Complete	
§ 31270 D	Locking Shaft Lever Extension Pin	1
§ 31271 D	Locking Shaft Lever Pin	1
§ 51190 D	Locking Shaft Lever Extension	1
§ 51734 D	Locking Shaft	1
§ 52158 D	Locking Shaft Lever	1
52130 DX	Connecting Rod, Complete	
47496 DB	Connecting Rod Bolt Lock	4
§ 47640 D	Piston Pin Bushing	1
§ 52130 D	Connecting Rod	1
§ 52131 D	Connecting Rod Cap	1
63116 D	Connecting Rod Bolt Washer	4
63123 D	Connecting Rod Bolt	4

§ - Not supplied separately

PART NUMBER	DESCRIPTION	NO. USED IN ASSEMBLY
52242 DB	STEERING CLUTCH, COMPLETE	
6470 D	STEERING CLUTCH HUB PLATE	1
8236 D	STEERING CLUTCH PRESSURE SPRING RETAINER	1
8237 DA	STEERING CLUTCH PRESSURE PLATE	1
8238 DA	STEERING CLUTCH HUB	1
46825 DA	STEERING CLUTCH FRICTION DISC	11
46826 D	STEERING CLUTCH DRIVING DISC	10
54610 DA	STEERING CLUTCH PRESSURE SPRING	1
54969 D	STEERING CLUTCH PRESSURE PLATE DOWEL BOLT	3
	CAP SCREW, 7/16 x 1" N.C. HEX HEAD	6
	LOCKWASHER, 7/16"	9
52515 DA	IGNITION CUT OUT SWITCH CONTACT AND TERMINAL PLATE, COMPLETE	
§ 52512 D	IGNITION CUT OUT SWITCH CONTACT	1
§ 52513 D	IGNITION CUT OUT SWITCH TERMINAL PLATE	1
§ 57242 D	IGNITION CUT OUT SWITCH INSULATION PLATE CENTER	1
	RIVET, No. 12 x 3/16" ROUND HEAD	2
52613 D	INJECTION NOZZLE, COMPLETE	
32493 D	NOZZLE BLEEDER VALVE	1
37148 D	NOZZLE VALVE GASKET	3
37150 D	NOZZLE VALVE SPACER	1
37152 D	NOZZLE VALVE AND SPRING	1
42766 D	NOZZLE BODY	1
43192 DA	NOZZLE INJECTOR PLATE	1
52612 D	NOZZLE FITTING	1
52750 DAX	CONNECTING ROD, COMPLETE	
47507 DA	CONNECTING ROD BOLT LOCK	2
§ 47640 D	PISTON PIN BUSHING	1
§ 52750 DA	CONNECTING ROD	1
§ 52751 DA	CONNECTING ROD CAP	1
63121 D	CONNECTING ROD BOLT	2
63122 D	CONNECTING ROD BOLT WASHER	2
52773 DB	OIL FILTER, COMPLETE	
8113 DAX	OIL FILTER BASE WITH 1/4" SQUARE HEAD AND 3/8" COUNTERSUNK HEAD PIPE PLUGS	1
13839 D	OIL FILTER CASE RETAINING BAR GASKET	1
13841 D	OIL FILTER CASE GASKET	1
13842 D	OIL FILTER CASE	1
28781 D	OIL PRESSURE REGULATING VALVE NUT GASKET	1
45285 DA	OIL PRESSURE REGULATING VALVE	1
45286 D	OIL PRESSURE REGULATING VALVE SPRING	1
46606 DX	OIL FILTER CASE RETAINER BAR WITH NUT AND PIN, G 6579-1/3	1
51204 D	OIL FILTER BASE GASKET	1
51205 D	OIL PRESSURE REGULATING VALVE NUT	1
63884 D	OIL FILTER ELEMENT (UMBRELLA TYPE)	1
	CAPSCREW, 7/16 x 2-1/2" N.C. HEX HEAD	2
53079 D	FLOAT AND LEVER, COMPLETE	
32572 DAX	CORK FLOAT, WITH FERRULE	1
32574 D	FLOAT REINFORCING PLATE	1
32575 D	FLOAT LEVER	1
32577 D	FLOAT LEVER SPRING, LOWER LEAF	1
32578 D	FLOAT LEVER SPRING, UPPER LEAF	1
	SLOTTED SCREW, No. 4 - 36 x 7/16" ROUND HEAD (CADMIUM PLATED)	1

§ - NOT SUPPLIED SEPARATELY

PART NUMBER	DESCRIPTION	NO. USED PER ASSEMBLY
53365 DA	TRACK ROLLERS, COMPLETE (SINGLE FLANGE)	
53358 DA	TRACK ROLLER OIL SEAL	2
53362 D	TRACK ROLLER RETAINER	2
53363 DX	TRACK ROLLER, WITH BUSHINGS (SINGLE FLANGE)	1
53369 DAX	TRACK ROLLER THRUST WASHER (SET OF TWO)	1
53370 DA	TRACK ROLLER SHAFT (INNER AND OUTER HALVES)	1
60573 DA	TRACK ROLLER RETAINER SNAP RING	2
53366 DA	TRACK ROLLER, COMPLETE (DOUBLE FLANGE)	
53358 DA	TRACK ROLLER OIL SEAL	2
53362 D	TRACK ROLLER RETAINER	2
53364 DX	TRACK ROLLER WITH BUSHINGS (DOUBLE FLANGE)	1
53369 DAX	TRACK ROLLER THRUST WASHER (SET OF TWO)	1
53370 DA	TRACK ROLLER SHAFT (INNER AND OUTER HALVES)	1
60573 DA	TRACK ROLLER RETAINER SNAP RING	2
53520 DA	STEERING BRAKE BAND, COMPLETE	
47958 DXA	STEERING BRAKE BAND, CENTER WITH LINING AND RIVETS	1
47959 DXA	STEERING BRAKE BAND, REAR, COMPLETE	1
47962 D	STEERING BRAKE BAND JOINT PIN	2
53489 DXA	STEERING BRAKE BAND, FRONT, COMPLETE	1
	COTTER PIN, 3/32 x 3/4"	2
53842 D	AIR VALVE CONTROL, COMPLETE	
24703 D	AIR VALVE CONTROL SHAFT PACKING	1
32896 D	AIR VALVE CONTROL SHAFT GLAND	1
47403 D	AIR VALVE CONTROL SHAFT CROSS PIN	1
50814 D	AIR VALVE CONTROL SHAFT RETAINER	1
53843 D	AIR VALVE CONTROL SHAFT	1
53896 D	EQUALIZER SPRING, COMPLETE	
47607 D	EQUALIZER SPRING LEAF, No. 1	1
47608 D	EQUALIZER SPRING LEAF, No. 3	1
47609 D	EQUALIZER SPRING LEAF, No. 4	1
47610 D	EQUALIZER SPRING LEAF, No. 5	1
54028 D	EQUALIZER SPRING LEAF, No. 2	1
54029 D	EQUALIZER SPRING LEAF, No. 6	1
55311 DX	EQUALIZER SPRING CENTER BOLT WITH NUT	1
53897 D	EQUALIZER SPRING, COMPLETE	
47602 D	EQUALIZER SPRING LEAF, No. 1	1
47603 D	EQUALIZER SPRING LEAF, No. 3	1
47604 D	EQUALIZER SPRING LEAF, No. 4	1
47605 D	EQUALIZER SPRING LEAF, No. 5	1
54026 D	EQUALIZER SPRING LEAF, No. 2	1
54027 D	EQUALIZER SPRING LEAF, No. 6	1
55311 DX	EQUALIZER SPRING CENTER BOLT WITH NUT	1

§ - NOT SUPPLIED SEPARATELY

PART NUMBER	DESCRIPTION	NO. USED IN ASSEMBLY
53940 D	Radiator Shutter Attachment	
42911 DB	Heat Indicator	1
47309 D	Radiator Shutter Operating Rod	1
47310 DX	Radiator Shutter Bell Crank Support with Pivot Pin and Welding Nuts	1
48671 D	Radiator Shutter	1
50417 D	Heat Indicator Clamp	1
50760 D	Radiator Shutter Control Crank Bracket, Complete	1
50763 DA	Radiator Shutter Control Crank Spacer	1
50765 DX	Radiator Shutter Control Rod Front with Coupling	1
50767 D	Radiator Shutter Control Crank Collar Pin	1
51510 D	Heat Indicator Reducing Bushing	1
51745 D	Radiator Shutter Bell Crank	1
52445 D	Radiator Shutter Control Crank with Handle	1
53031 D	Head Indicator Clamp Stud Washer	2
53939 D	Radiator Shutter Control Rod, Rear	1
	Drawing, ZG-2723, Radiator Shutter Control Rod Operating Transfer	1
	Cap Screw, 5/16 x 5/8" N.C.	8
	Carriage Bolt, 1/4 x 3/4" N.C.	2
	Hex. Nut, 1/4" N.C.	2
	Hex. Nut, No. 12-24 N.C.	2
	Hex. Nut, 3/8" N.C.	1
	Cotter Pin, 3/32 x 3/4"	2
	Cotter Pin, 1/8 x 3/4"	2
	Lockwasher, 1/4"	2
	Lockwasher, 5/16"	8
	Steel Washer, 11/32" I.D. x 3/4" O.D. x No. 16 Gauge	4
53966 DAX	Power Shaft, Complete	
§ 21249 D	Power Shaft Groov Pin	1
49548 D	Power Shaft Coupling	1
53966 DA	Power Shaft	1
	Steel Rivet, 5/16 x 2-5/8" Round Head	1
54024 DC	Dash and Cowl, Complete	
§ 51950 D	Starter Rod Holder Bracket	1
§ 53763 DB	Dash	1
§ 53765 DA	Dash Cowl	1
55754 D	Dash Spacer	2
§ 58251 D	Dash Countersink Block	2
	Welding Nut, 3/8" N.C.	4
54025 DC	Dash and Cowl, Complete	
45248 D	Dash Spacer	2
§ 51950 D	Starter Rod Holder Bracket	1
§ 52411 D	Compression Release Lever Pivot Bracket	1
§ 53764 DB	Dash	1
§ 53765 DA	Dash Cowl	1
§ 58251 D	Dash Countersink Block	2
	Welding Nut, 3/8" N.C.	4

§ Not supplied separately.

PART NUMBER	DESCRIPTION	NO. USED PER ASSEMBLY
54035 DY	MAGNETO MEMBER WITH PAWLS, COMPLETE	
47461 D	PAWL PIN WASHER	2
47462 D	PAWL PIN SNAP RING	2
54033 D	PAWL	2
54034 D	PAWL SPRING	2
54035 DX	MAGNETO MEMBER	1
54035 DZ	ROTATING UNIT, COMPLETE	
47294 D	COUPLING FELT RETAINER	1
47464 D	SPRING LUBRICATING WICK	1
47465 D	SPRING END BUTTON	2
47822 D	MAGNETO COUPLING SPRING	1
49093 DX	DRIVE MEMBER	1
54035 DY	MAGNETO MEMBER WITH PAWLS, COMPLETE	1
54087 D	HIGH SEAT ATTACHMENT	
51915 D	TOOL BOX	1
52201 DX	SEAT SUPPORT, REAR WITH GUIDE	1
52390 D	SEAT CUSHION SIDE, COMPLETE	2
54095 DXA	SEAT SIDE SHEET, L.H. WITH SUPPORT ANGLE BRACKET	1
54096 DXA	SEAT SIDE SHEET, R.H. WITH SUPPORT ANGLE BRACKET	1
54097 DAX	SEAT SUPPORT, FRONT, COMPLETE WITH GUIDE	1
54098 DA	TOOL BOX SUPPORT	2
54099 DX	FOOT REST, L.H. WITH GROMMET	1
54100 DX	FOOT REST, R.H. WITH GROMMET	1
56069 DX	FUEL TANK SUPPORT BRACKET, L.H. WITH GUSSETS	1
56070 DX	FUEL TANK SUPPORT BRACKET, R.H. WITH GUSSETS	1
61248 D	FUEL TUBE	1
	CAP SCREW, 3/8 x 5/8" N.C. HEX. HEAD	5
	CAP SCREW, 3/8 x 3/4" N.C. HEX. HEAD	4
	CAP SCREW, 3/8 x 3/4" N.F. HEX. HEAD	4
	CAP SCREW, 3/8 x 7/8" N.F. HEX. HEAD	4
	CAP SCREW, 3/8 x 1-1/4" N.C. HEX. HEAD	1
	CAP SCREW, 1/2 x 1" N.C. HEX. HEAD	6
	HEX. NUT, 3/8" N.C. (WELDING GROMMET)	2
	HEX. NUT, 3/8" N.F.	8
	LOCKWASHER, 3/8"	14
	LOCKWASHER, 1/2"	6
	CARRIAGE BOLT, 5/16 x 5/8" N.C.	4
	HEX NUT, 5/16" N.C.	4
	LOCKWASHER, 5/16"	4
54300 DBX	PUMP HOUSING, COMPLETE	
40211 D	LUBRICATING INSTRUCTION PLATE	1
40244 D	FUEL SUPPLY PUMP STUD	3
40329 DA	NAME PLATE DRIVE RIVET	2
54299 D	CONTROL ROD BUSHING	2
§ 54300 DB	PUMP HOUSING	1
57506 D	LUBRICATING OIL GAUGE ROD BUSHING	1
57507 D	LUBRICATING OIL DRAIN PLUG	1
57508 D	LUBRICATING OIL DRAIN PLUG GASKET	1
	PIPE PLUG, 1/8"	2

§ NOT SUPPLIED SEPARATELY

PART NUMBER	DESCRIPTION	NO. USED IN ASSEMBLY
54308 DX	INSPECTION COVER OIL FILLER CAP, COMPLETE	
§ 54308 D	OIL HOLE COVER	1
§ 54309 D	OIL FILTER SHELL	1
§ 54310 D	OIL FILLER SNAP RING	1
§ 54311 D	OIL FILLER PLATE	1
§ 54312 D	OIL FILLER FILTERING ELEMENT	1
§ 56575 D	OIL FILTER CUP	1
54345 DA	TAPPET, COMPLETE	
54346 D	TAPPET SCREW	1
54347 D	TAPPET SCREW LOCK NUT	1
§ 54348 DBX	TAPPET SHELL	1
54349 D	TAPPET PIN	1
54350 D	TAPPET ROLLER BUSHING	1
54351 D	TAPPET ROLLER	1
54372 DB	OVERFLOW VALVE, COMPLETE	
40399 DA	VALVE PROPER	1
40401 D	VALVE SPRING	1
54373 DB	VALVE BODY	1
54374 D	VALVE SCREW	1
54388 D	SLEEVE WITH BEARINGS, COMPLETE	
54389 D	SLEEVE, COMPLETE	1
54393 D	SLEEVE BEARING	2
54394 D	SLEEVE THRUST BEARING	2
54395 D	SLEEVE SLIDING RING	1
54396 D	SLEEVE NUT	1
54397 D	SLEEVE WASHER	1
54389 D	SLEEVE, COMPLETE	
§ 54390 D	SLEEVE	1
§ 54391 D	SLEEVE THRUST WASHER, SMALL	1
§ 54392 D	SLEEVE THRUST WASHER, LARGE	1

§ NOT SUPPLIED SEPARATELY

DETAILS OF ASSEMBLY

PART NUMBER	DESCRIPTION	NO. USED PER ASSEMBLY
54400 D	Governor Weight and Shaft, Complete	
54378 D	Driven Gear Securing Nut	1
54379 D	Driven Gear Securing Nut Lockwasher	1
54404 D	Governor Shaft and Spider with Weights, Complete	1
54406 D	Bearing Plate	1
54407 D	Ball Bearing, Inner	1
54417 D	Bearing Bridge	1
54418 D	Driven Gear	1
	Screw, No. 8 - 32 x 7/16" Flat Head	3
54404 D	Governor Shaft and Spider with Weights, Complete	
54398 DX	Governor Weight with Pin, 54401 D and 3 Bearings, 54399 D	2
54402 DX	Governor Shaft and Spider	1
54405 D	Governor Weight Needle Bearing Pin, Long	2
54408 DA	Drive Gear, Complete	
54409 DA	Drive Gear Hub	1
54410 DA	Drive Gear	1
54411 D	Adjusting Spacer as Required for Proper Assembly	1
54412 D	Adjusting Spacer as Required for Proper Assembly	1
54413 D	Adjusting Spacer as Required for Proper Assembly	1
54414 DA	Governor Drive Spring Disc	1
54415 D	Gear Adjusting Nut Lockwasher	1
54416 D	Gear Adjusting Nut	1
54427 D	Stop Plate Bridge, Complete	
54424 DX	Stop Plate with Pin and Screw	1
54428 D	Stop Plate Bridge	1
54428 DA	Stop Plate Screw Washer	3

§ Not supplied separately

PART NUMBER	DESCRIPTION	NO. USED PER ASSY.
54431 D	GOVERNOR END COVER, COMPLETE	
§ 54432 DA	GOVERNOR END COVER	1
54434 D	GOVERNOR OPERATING SHAFT OIL SEAL	1
54435 D	GOVERNOR OPERATING SHAFT BUSHING	1
54441 D	CLOSING PLUG (FOR GOVERNOR OPERATING SHAFT HOLE IN END COVER)	1
	PIPE PLUG, 1/4"	1
54442 D	FULCRUM YOKE, COMPLETE	1
§ 54443 D	GOVERNOR FULCRUM YOKE	1
§ 54444 D	GOVERNOR CONTROL ROD LINK	1
§ 54445 D	GOVERNOR FULCRUM YOKE SHAFT	1
§ 54446 D	GOVERNOR CONTROL ROD LINK PIN	1
§ 54448 D	GOVERNOR FULCRUM YOKE LEVER	1
§ 54449 D	GOVERNOR FULCRUM YOKE LEVER PLATE	1
	SLOTTED SCREW, NO. 6-32 x 5/16" N.C. OVAL HEAD	1
54650 DA	OIL FILTER, COMPLETE	
8113 DAX	OIL FILTER BASE WITH 1/4" SQUARE HEAD AND 3/8" COUNTERSUNK HEAD PIPE PLUGS	1
13839 D	OIL FILTER CASE RETAINING BAR GASKET	1
13841 D	OIL FILTER CASE GASKET	1
13842 D	OIL FILTER CASE	1
28781 D	OIL PRESSURE REGULATING VALVE NUT GASKET	1
45285 DA	OIL PRESSURE REGULATING VALVE	1
46606 DX	OIL FILTER CASE RETAINER BAR WITH NUT AND PIN, G 6579-1/3	1
51204 D	OIL FILTER BASE GASKET	1
51205 D	OIL PRESSURE REGULATING VALVE NUT	1
62672 D	OIL PRESSURE REGULATING VALVE SPRING	1
63884 D	OIL FILTER ELEMENT (UMBRELLA TYPE)	1
	CAPSCREW, 7/16 x 2-1/2" N.C., HEX HEAD	2

§ NOT SUPPLIED SEPARATELY

PART NUMBER	DESCRIPTION	NO. USED PER ASSEMBLY
54688 D	Lubricating Oil Pump, Complete	
8088 DX	Lubricating Oil Pump Body with Idler Shaft	1
8089 DAX	Lubricating Oil Pump Auxiliary Gear Housing with Dowel 46053 D and Tube, 46157 D	1
8210 D	Lubricating Oil Pump Cover	1
13021 D	Lubricating Oil Pump Drive Key	2
46595 DA	Lubricating Oil Pump Drive Pinion	1
51038 DX	Lubricating Oil Pump Shaft with Pins, 32316 D and 32319 D	1
51040 DA	Lubricating Oil Pump Body Gear	1
51041 DA	Lubricating Oil Pump Idler Gear	1
51044 D	Lubricating Oil Pump Auxiliary Gear Housing Gasket	1
51044 D	Lubricating Oil Pump Cover Gasket	1
51046 D	Lubricating Oil Pump Auxiliary Body Gear	1
51047 D	Lubricating Oil Pump Auxiliary Idler Gear	1
56108 D	Lubricating Oil Pump Screen (Floto)	1
	Cap Screw, 3/8 x 2" N.C. Hex. Head	4
	Lockwasher, 3/8"	4
	Cotter Pin, 1/8 x 1-1/4"	1
55228 DD	Clutch, Complete Less Driven Member	
31238 D	Adjusting Ring Plate	1
43207 D	Connecting Link	3
43211 D	Link Pin, Long	3
50430 D	Return Spring Pin	3
50431 D	Return Spring	3
50433 D	Back Plate	1
51521 D	Pressure Plate with Set of Cam Blocks and Screw Locks	1
55230 DB	Sleeve with Bearing, Complete	1
55231 DXA	Camshaft, Complete	1
55371 DAX	Adjusting Ring with Lock Screws and Nuts	1
N 32202	Link Pin, Short	3
	Steel Washer, 3/8" I.D. x 7/8" O.D. x No. 16 Gauge	6
	Spring Cotter, 1/16 x 1/2"	3
55230 DB	Sleeve and Bearing, Complete	
29780 D	Snap Ring	1
31240 D	Ball Bearing	1
31242 DA	Bearing Plate	1
55229 DAXA	Sleeve with Bushing	1
55232 DA	Bearing Carrier	1
	Cap Screw, 5/16 x 5/8" N.C. Hex. Head	4
	Lockwasher, 5/16"	4
55231 DXA	Camshaft, Complete	
§ 37947 DA	Retainer Plate	6
§ 38960 D	Roller (Large)	6
§ 38961 D	Roller (Small)	12
§ 54963 D	Felt Plug	6
§ 55231 D	Camshaft	3
Q 3627	Camshaft Lubricator	3

§ Not supplied separately

PART NUMBER	DESCRIPTION	NO. USED IN ASSEMBLY
55351 D	WATER PUMP, COMPLETE	
2370 DAX	FAN AND WATER PUMP PULLEY FLANGE WITH SET SCREW, 5/16 x 7/8" N.C., HEADLESS (DOG POINT) AND HEX JAM NUT, 5/16" N.C.	1
6518 DAX	WATER PUMP IMPELLER WITH SHAFT AND THRUST WASHER	1
8023 DX	FAN AND GENERATOR PULLEY HUB WITH OIL SEAL, 20290 D	1
20293 D	WATER PUMP BEARING LOCK SLEEVE	1
20296 D	WATER PUMP PACKING GLAND	1
20299 D	WATER PUMP BEARING CLAMP NUT	1
20300 D	WATER PUMP FELT WASHER	1
20301 D	WATER PUMP DRIVING STUD	2
20306 DX	WATER PUMP BEARING RETAINER WITH OIL SEAL, 20289 D	1
20585 D	WATER PUMP DRIVER	1
20586 D	WATER PUMP DRIVER PIN	1
21839 D	WATER PUMP BEARING RETAINER GASKET	1
§ 27644 D	WATER PUMP SHAFT PACKING (50790 D FOR SERVICE)	1
45993 D	WATER PUMP BEARING SPACER	1
55358 D	WATER PUMP DRIVING STUD WASHER	2
68315 D	WATER PUMP BODY WITH SLEEVE, 45982 DX	1
G 3792	WATER PUMP DRIVER SPRING	2
Q 3615	WATER PUMP BEARING LUBRICATOR	1
QA 3628	WATER PUMP SHAFT BEARING LUBRICATOR WITH CAP, Q 3659	1
ST 205 A	WATER PUMP BEARING (IHC)	1
	CAP SCREW, 5/16 x 1" N.C. HEX HEAD	2
	HEX NUT, 5/16" N.F.	1
	LOCKWASHER, 5/16"	5
55911 DX	STARTING CRANK, COMPLETE	
§ 4709 D	STARTING CRANK SLEEVE	1
6935 D	STARTING CRANK RATCHET	1
§ 49683 D	STARTING CRANK BUSHING	1
§ 55911 D	STARTING CRANK	1
G 3754	STARTING CRANK RATCHET PIN	1
55959 DBX	STEERING CLUTCH RELEASE FORK AND PIVOT, COMPLETE	
42298 DB	STEERING CLUTCH RELEASE PIN BUSHING	2
55954 D	STEERING CLUTCH RELEASE FORK PIVOT	1
55959 DB	STEERING CLUTCH RELEASE FORK WITH PIVOT BUSHING, 55955 D	1
60095 D	STEERING RELEASE FORK PIVOT LOCK	1
60096 D	STEERING RELEASE FORK PIVOT NUT LOCK	1
56066 D	DISTRIBUTOR, COMPLETE	
6483 DY	DISTRIBUTOR BODY, COMPLETE	1
47417 DX	ROTOR PINION	1
49416 DX	DISTRIBUTOR GEAR COVER, COMPLETE	1
49420 DX	DISTRIBUTOR GEAR, 24 TEETH	1
	SCREW, No. 8 - 32 x 1/2" ROUND HEAD (CADMIUM PLATED)	2
	LOCKWASHER, No. 8 (CADMIUM PLATED)	2
56253 DA	CYLINDER SLEEVE WITH PISTON, COMPLETE	
§ 8286 DR	PISTON	1
§ 8287 DR	CYLINDER SLEEVE	1
§ 47643 DA	PISTON PIN (STANDARD) (52608 DA FOR SERVICE)	1
67812 D	PISTON RING, 1/4" (OIL REGULATING)	1
50956 D	PISTON RING, 5/32" (PLAIN, COMPRESSION)	2
52754 D	PISTON RING, 5/32" (TAPER, COMPRESSION)	1
31194 H	PISTON PIN RETAINER RING	2

§ NOT SUPPLIED SEPARATELY

PART NUMBER	DESCRIPTION	NO. USED PER ASSEMBLY
56623 DB	Cylinder Sleeve with Piston, Complete	
§ 8080 DAR	Piston	1
§ 8429 DAR	Cylinder Sleeve	1
§ 47643 DA	Piston Pin (Standard) (52608 DA For Service)	1
47953 D	Piston Ring, 1/4" (Oil Regulating)	2
50954 D	Piston Ring, 1/8" (Compression, Top)	1
50955 D	Piston Ring, 3/16" (Compression, Lower)	1
50956 D	Piston Ring, 5/32" (Compression, Intermediate)	1
31194 H	Piston Pin Retainer Ring	2
57041 D	Fan and Water Pump, Complete	
2370 DAX	Fan and Water Pump Pulley Flange with Set Screw and Nut	1
6518 DAX	Water Pump Impeller with Shaft and Thrust Washer	1
8023 DX	Fan and Generator Pulley Hub with Oil Seal, 20290 D	1
20293 D	Water Pump Bearing Lock Sleeve	1
20296 D	Water Pump Packing Gland	1
20299 D	Water Pump Bearing Clamp Nut	1
20300 D	Water Pump Felt Washer	1
20301 D	Water Pump Driving Stud	2
20306 DX	Water Pump Bearing Retainer with Oil Seal, 20289 D	1
20585 D	Water Pump Driver	1
20586 D	Water Pump Driver Pin	1
21259 D	Fan	1
21839 D	Water Pump Bearing Retainer Gasket	1
45993 D	Water Pump Bearing Spacer	1
§ 27644 D	Water Pump Shaft Packing (50790 D For Service)	2
68315 D	Water Pump Body, with Sleeve, 45982 DX	1
G 3792	Water Pump Driver Spring	2
Q 3615	Water Pump Bearing Lubricator	1
QA 3628	Water Pump Shaft Lubricator with Cap, Q 3659	1
ST 205A	Water Pump Bearing (I.H.C.)	2
	Cap Screw, 5/16 x 1" N.C. Hex. Head	2
	Lockwasher, 5/16"	4
57169 D	Stop Plate Bridge, Complete	
54428 D	Stop Plate Bridge	1
55428 DA	Stop Plate Screw Washer	3
57167 D	Stop Plate with Pin and Screw	1
	Hex. Jam Nut, 1/4" N.F.	2
57235 D	Track Frame Diagonal Brace Bearing Set, Upper and Lower, Complete	
§ 8750 D	Track Frame Diagonal Brace Bearing, Upper	1
§ 8751 D	Track Frame Diagonal Brace Bearing, Lower	1
18942 D	Track Frame Diagonal Brace Bearing Bolt Lockwasher	2
53656 D	Track Frame Diagonal Brace Bearing Felt	2
57198 D	Track Frame Diagonal Brace Bearing Bushing	4
	Cap Screw, 7/16 x 3" N.F. Hex. Head	2
	Hex. Nut, 7/16" N.F.	2

§ Not supplied separately

PART NUMBER	DESCRIPTION	NO. PER ASSY
57279 D	BATTERY TO AMMETER CABLE, COMPLETE	
§ 38777 D	BATTERY TERMINAL (NEGATIVE) (DRILLED TYPE)	1
§ 57157 D	BATTERY TO AMMETER CABLE LUG TERMINAL	1
§ 57159 D	BATTERY TO AMMETER CABLE INSULATING TUBE, LONG	1
§ 57160 D	BATTERY TO AMMETER CABLE INSULATING TUBE, SHORT	1
§ 57279-1/2 D	BATTERY TO AMMETER CABLE	1
§ 57280 D	BATTERY TO AMMETER CABLE CASING	1
	BLACK FRICTION TAPE, 3/4 x 12" LONG	1
57283 DA	BATTERY TO STARTING SWITCH CABLE, COMPLETE	
§ 23431 D	BATTERY TO STARTING SWITCH CABLE LUG TERMINAL	1
§ 41910 D	BATTERY TO STARTING SWITCH CABLE INSULATING TUBE	1
§ 57283-1/2 D	BATTERY TO STARTING SWITCH CABLE	1
§ 57284 D	BATTERY TO STARTING SWITCH CABLE CASING	1
§ 26376 H	BATTERY TERMINAL (NEGATIVE)	1
	BLACK FRICTION TAPE, 3/4 x 48" LONG	1
57310 DY	LIGHTING SWITCH, COMPLETE	
§ 57310 D	SWITCH	1
57312 D	SWITCH MOUNTING NUT	1
57313 D	SWITCH KNOB	1
49425 H	SWITCH LOCKWASHER (SHAKEPROOF)	1
64022 H	SWITCH HANDLE MOUNTING SCREW	1
VW 798	TRANSFER	1
	LOCKWASHER, No. 8	
57311 DY	LIGHTING SWITCH, COMPLETE	
§ 57311 D	SWITCH	1
57312 D	SWITCH MOUNTING NUT	1
57313 D	SWITCH KNOB	1
49425 H	SWITCH LOCKWASHER (SHAKEPROOF)	1
64022 H	SWITCH HANDLE MOUNTING SCREW	1
VW 798	TRANSFER	1
	LOCKWASHER, No. 8	1
57926 DX	COIL, COMPLETE WITH END INSULATOR	
§ 25977 D	PRIMARY LEADOUT INSULATING TUBE	1
§ 27534 D	SECONDARY LEADOUT INSULATING STICKER	1
§ 47440 DA	COIL WINDING, COMPLETE	1
47442 D	PRIMARY TO CONDENSER LEADOUT TUBE	1
§ 47445 D	SECONDARY LEADOUT TERMINAL	1
§ 47446 D	SECONDARY LEADOUT TERMINAL INSULATOR	2
§ 47447 D	SECONDARY TERMINAL PATCH	1
§ 47448 D	TERMINAL ANCHORING STRIP	1
§ 49448 D	PRIMARY TO CONDENSER LEADOUT TERMINAL	1
49593 D	COIL END INSULATORS	2
§ 51465 D	COIL INSULATION REINFORCING PATCH	2
§ 51466 D	COIL BINDING TAPE	1
	SCREW, No. 8-32 x 5/8" FLAT HEAD	2

§ NOT SUPPLIED SEPARATELY

PART NUMBER	DESCRIPTION	NO. USED PER ASSEMBLY
57977 D	Fuel Bowl, Complete	
§ 6514 DA	Fuel Bowl	1
§ 27445 DB	Drip Hole Filler	1
§ 32611 D	Passage Plug	1
35606 D54	Main Air Bleed	1
45148 D	Dust Seal Retainer	1
45149 D	Butterfly Dust Seal	1
46185 D	Groov Pin, 1/8 x 1/2" (Type No. 1)	1
§ 57957 D	Drip Hole Plug	1
60330 D	Fuel Adjusting Screw Seat	1
58298 D	Heavy Duty Track Roller Shield Attachment	
58294 DAX	Heavy Duty Track Roller Shield, Outer, L.H. with Stiffener	1
58295 DAX	Heavy Duty Track Roller Shield, Outer, R.H. with Stiffener	1
58296 DAX	Heavy Duty Track Roller Shield, Inner, L.H. with Stiffener	1
58297 DAX	Heavy Duty Track Roller Shield, Inner, R.H. with Stiffener	1
58318 DA	Dash and Cowl, Complete	
§ 51950 D	Starter Rod Holder Bracket	1
§ 53765 DA	Dash Cowl	1
55754 D	Dash Spacer	2
§ 58251 D	Dash Countersink Block	2
§ 58315 DA	Dash	1
	Welding Nut, 3/8" N.C.	4
58359 DMX	Starting Crank, Complete	1
§ 4709 D	Starting Crank Sleeve	1
6935 D	Starting Crank Ratchet	2
§ 41417 D	Starting Crank Bushing	1
§ 58359 DM	Starting Crank	1
G 3754	Starting Crank Ratchet Pin	1
58554 D	Gasoline Burning Attachment	
8320 DBY	Cylinder Head 8320 DBX with Valves and Springs, Complete	1
8321 DAX	Exhaust and Intake Manifold, Complete	1
29900 DX	Fuel Pump Inlet Elbow with Nut, 29899 D (in Fuel Pump)	1
31281 D	Oil Pan Side Drain Cover Screw Lock	1
31336 D	Carburetor Gasket	1
45986 D	Water Outlet Elbow Gasket	1
52755 DA	Manifold Gasket	2
52793 DA	Valve Cover Gasket	1
52795 DD	Cylinder Head Gasket	1
52806 DX	Oil Pan Side Drain Cover	1
52808 D	Oil Pan Side Drain Cover Gasket	1
52815 D	Carburetor, Complete	1
53953 D	Fuel Tank Shut-Off Valve	1
58095 DA	Exhaust Pipe	1
58318 DA	Dash and Cowl, Complete	1
58322 DX	Hood Sheet, Complete	1
	Hex. Nut, 3/8" N.C. for Oil Pan Side Drain Cover Nut Lock	2
	Blueprint, ZG 2623#2, Piston, Cylinder Head and Ratio Chart	1
	Blueprint, 9195 DAX, Cylinder Head, Complete	1
58840 DX	Drain Cock, Complete	
58837 D	Drain Cock Lock Nut	1
64536 D	Drain Cock Stem	1
64932 D	Drain Cock Body	1

§ Not supplied separately

PART NUMBER	DESCRIPTION	NO. USED PER ASSEMBLY
59097 D	CARBURETOR BODY, COMPLETE	
8479 DBX	CARBURETOR BODY, COMPLETE	1
27445 DB	DRIP HOLE FILLER	1
50802 D	CARBURETOR DRAIN TUBE CONNECTOR	1
58835 D	AIR VALVE CONTROL PLUG	1
59221 D	FUEL BOWL, COMPLETE	
§ 8731 D	FUEL BOWL	1
§ 27445 DB	DRIP HOLE FILLER	1
§ 32611 D	PASSAGE PLUG	1
45148 D	DUST SEAL RETAINER	1
45149 D	BUTTERFLY DUST SEAL	1
46185 D	GROOV PIN, 1/8 x 1/2 (TYPE NO. 1)	1
57957 D	DRIP HOLE PLUG	1
59172 D	FUEL ADJUSTING SCREW SEAT	1
59173 D	MAIN AIR BLEED	1
59320 D	STEERING CLUTCH CONTROL FIELD CHANGE IMPROVEMENT PACKAGE	
8944 DX	STEERING CLUTCH HAND LEVER, L.H., COMPLETE	1
8945 DX	STEERING CLUTCH HAND LEVER, R.H., COMPLETE	1
14186 DA	STEERING CLUTCH HAND LEVER LUBRICATOR	2
14186 DA	STEERING CLUTCH OPERATING TURNBUCKLE SOCKET LUBRICATOR	2
59311 D	STEERING CLUTCH OPERATING TURNBUCKLE	2
59312 D	STEERING CLUTCH OPERATING TURNBUCKLE SOCKET, L.H.	1
59313 D	STEERING CLUTCH OPERATING TURNBUCKLE SOCKET, R.H.	1
59314 D	STEERING CLUTCH OPERATING TURNBUCKLE SOCKET PLUG	2
59315 D	STEERING CLUTCH RELEASE LEVER RETURN SPRING	2
59317 D	STEERING CLUTCH RELEASE LEVER	2
	CAP SCREW, 1/2 x 2-1/4" N.F. HEX. HEAD	2
	HEX. NUT, 1/2" N.F.	2
	HEX. JAM NUT, 5/8" N.F.	2
	HEX. JAM NUT, 5/8" N.F. (LEFT HAND THREAD)	2
	LOCKWASHER, 1/2"	2
	COTTER PIN, 1/8 x 1-1/2"	2
59531 D	PUSH ROD CHAMBER SIDE PLATE, COMPLETE	
8959 D	BREATHER BODY	1
59480 D	BREATHER BAFFLE	1
59481 D	BREATHER BODY GASKET	1
59482 D	BREATHER ELEMENT	1
59484 D	BREATHER PIPE FLANGE	1
59486 D	BREATHER PIPE	1
59487 D	BREATHER PIPE CLIP	1
59488 D	PUSH ROD CHAMBER SIDE PLATE, REAR	1
	SLOTTED SCREW, NO. 10-24 x 1/2" N.C. ROUND HEAD	4
	CAP SCREW, 5/16 x 7/8" N.C. HEX. HEAD	2
	LOCKWASHER, 5/16"	2
	LOCKWASHER, NO. 10	4

§ NOT SUPPLIED SEPARATELY

PART NUMBER	DESCRIPTION	NO. USED PER ASSEMBLY
59653 DA	FUEL RETURN PIPE, COMPLETE	
§ 59654 DA	FUEL RETURN PIPE	1
§ 59655 D	FUEL RETURN FITTING, SMALL	1
§ 59656 D	FUEL RETURN FITTING, LARGE	1
59657 D	FUEL RETURN PIPE SMALL WASHER	2
59658 D	FUEL RETURN PIPE LARGE WASHER	2
59658 D	FUEL INLET FITTING SEAL WASHER	1
59667 D	FUEL INLET FITTING SEAL	1
59677 DX	GOVERNOR SHAFT, COMPLETE	
§ 59677 D	GOVERNOR SHAFT	1
59682 D	GOVERNOR SHAFT NUT	2
4167 T	GOVERNOR SHAFT KEY (WOODRUFF NO. 3-1/8 x 1/2")	1
7699 TM	GOVERNOR SHAFT KEY (WOODRUFF NO. 5-1/8 x 5/8")	1
59686 DX	GOVERNOR WEIGHT, COMPLETE	
59686 D	GOVERNOR WEIGHT	2
59687 D	GOVERNOR WEIGHT PIN	2
59688 D	GOVERNOR WEIGHT RIVET	2
59689 D	GOVERNOR WEIGHT CARRIER	1
59733 DAYA	PRIMARY PUMP SHAFT, COMPLETE	
68389 D	PRIMARY PUMP HOUSING COVER, COMPLETE	1
59733 DAX	PRIMARY PUMP SHAFT WITH COUPLING, 59736 D AND RIVET, 61927 D	1
59741 DA	PRIMARY PUMP PRESSURE GEAR	1
64060 D	PRIMARY PUMP SHAFT KEY	2
65210 D	PRIMARY PUMP SHAFT SNAP RING	1
59762 DX	GOVERNOR FORK SHAFT, COMPLETE	
59734 DA	GOVERNOR FORK KEY	1
§ 59762 D	GOVERNOR FORK SHAFT	1
59763 D	GOVERNOR FORK SHAFT NUT	1
64060 D	TORQUE CONTROL LEVER KEY	1
60188 DAX	FUEL TANK, COMPLETE WITH FILLER CAP	
§ 42386 D	FUEL TANK FILLER NECK	1
42387 D	FUEL TANK FILLER CAP WITH GASKET	1
§ 42389 D	FUEL RETURN STAND PIPE SUPPORT	1
§ 52860 D	FUEL TANK TAPPING BLOCK	2
§ 59891 D	SEAT CUSHION BACK FASTENING BUTTON	2
§ 59892 D	FUEL TANK TAPPING BLOCK, SMALL	9
§ 59893 D	FUEL TANK TAPPING BLOCK, LARGE	6
§ 60182 D	FUEL RETURN PIPE FLANGE	1
§ 60183 D	FUEL TANK OUTLET FLANGE	1
§ 60184 D	FUEL DRAIN FLANGE	1
§ 60186 D	FUEL TANK BOTTOM STIFFENER	2
§ 61376 D	FUEL TANK BODY	1
§ 61377 DA	FUEL TANK END, L.H.	1
§ 61378 DA	FUEL TANK END, R.H.	1
§ 61379 D	FUEL TANK BAFFLE, L.H.	1
§ 61380 D	FUEL TANK BAFFLE, R.H.	1
§ 63701 D	FUEL TANK SIDE BRACKET	2
	CORK, 5/16 x 7/16 x 5/8" LONG (XX QUALITY, SIZE NO. 1)	1

§ NOT SUPPLIED SEPARATELY

PART NUMBER	DESCRIPTION	NO. USED PER ASS'Y
60193 DA	CYLINDER SLEEVE WITH PISTON, COMPLETE	
§ 8287 DR	CYLINDER SLEEVE	1
§ 9000 DR	PISTON	1
§ 47643 DA	PISTON PIN (STANDARD) (52608 DA FOR SERVICE)	1
67812 D	PISTON RING, 1/4" (OIL REGULATING)	1
50956 D	PISTON RING, 5/32" (COMPRESSION PLAIN)	2
52754 D	PISTON RING, 5/32" (COMPRESSION TAPER)	1
31194 H	PISTON PIN RETAINER RING	2
60194 DA	CYLINDER SLEEVE WITH PISTON, COMPLETE	
§ 8287 DR	CYLINDER SLEEVE	1
§ 9001 DR	PISTON	1
47643 DA	PISTON PIN (STANDARD) (52608 DA FOR SERVICE)	1
67812 D	PISTON RING, 1/4" (OIL REGULATING)	1
50956 D	PISTON RING, 5/32" (COMPRESSION PLAIN)	2
52754 D	PISTON RING, 5/32" (COMPRESSION TAPER)	1
31194 H	PISTON PIN RETAINER RING	2
60218 D	FIELD CHANGE PACKAGE FOR ADDING CARBURETOR DRAIN TUBE	
27445 DB	DRIP HOLE FILLER	
§ 32611 D	DRIP HOLE PLUG	1
50802 D	CARBURETOR DRAIN TUBE CONNECTOR	1
50821 D	CARBURETOR DRAIN TUBE CLIP	1
53971 DX	CARBURETOR DRAIN TUBE WITH NUT, 25038 HA	1
55660 DA	METERING WELL	1
58835 D	AIR VALVE CONTROL PLUG	1
59241 D	NEEDLE VALVE GAUGE GASKET	1
	BLUEPRINT, ZG 3142, DRAIN TUBE MACHINING AND ASSEMBLING	1
60599 D	PUSH ROD CHAMBER SIDE PLATE REAR, COMPLETE	
8959 D	BREATHER BODY	1
59480 D	BREATHER BAFFLE	1
59481 D	BREATHER BODY GASKET	1
59482 D	BREATHER ELEMENT	1
59484 D	BREATHER PIPE FLANGE	1
59487 D	BREATHER PIPE CLIP	1
59488 D	PUSH ROD CHAMBER SIDE PLATE, REAR	1
59489 D	BREATHER PIPE	1
	SLOTTED SCREW, NO. 10-24 x 1/2" N.C. ROUND HEAD	4
	CAP SCREW, 5/16 x 7/8" N.C. HEX. HEAD	2
	LOCKWASHER, 5/16"	2
	LOCKWASHER, NO. 10	4

§ - NOT SUPPLIED SEPARATELY

DETAILS OF ASSEMBLY

PART NUMBER	DESCRIPTION	NO. USED PER ASSEMBLY
50732 D	Bosch Type "A" Injection Pump Improvement Package	
12736 D	Fuel Injection Pump Seal, Long	1
35252 DX	Oil Level Equalizing Tube Connector, 35252 D with Nut, 29899 D	1
54278 D	Fulcrum Yoke Pivot Screw Lockwasher	2
54314 DB	Pump Inspection Cover Gasket	1
54364 DB	Fuel Supply Pump Housing Gasket	1
54387 DB	Governor Housing Gasket	1
54409 DA	Drive Gear Hub	X
54411 D	Adjusting Spacer .035	1
54414 DA	Governor Drive Spring Disc	1
54415 D	Gear Adjusting Nut Lockwasher	1
54420 DA	Governor Inspection Cover Gasket	1
54422 DAX	Bumper Spring with Button	1
54433 DB	Governor End Cover Gasket	1
54451 DA	Fulcrum Yoke Pivot Screw	2
54475 DAX	End Cap with Bearing, 54476 DA	1
54478 DB	End Cap Gasket	1
57508 D	Injection Pump Oil Drain Plug Gasket	1
59900 D	Injection Pump Overflow Pipe Elbow	1
60738 D	Pump Inspection Cover	1
60740 D	Pump Housing Breather, Complete	1
60740 D	Governor Housing Breather, Complete	1
60741 D	Governor Inspection Cover	1
60742 DAX	Oil Level Equalizing Tube with 2 Nuts, 29899 D	1
60744 DX	Injection Pump Oil Drain Fitting, 60744 D with Nut, 29899 D	1
60745 D	Governor Drain Tee	1
60747 DX	Injection Pump Overflow Pipe with Nut, 29898 D	1
§ 0 40	Fuel Injection Pump Seal, Short	1
	Blueprint, ZG 2605, Governor Control Adjustment	1
	Blueprint, ZG 3183, Oil Level Equalizing Tube Assembly	1
	Blueprint, 51337 DB, Injection Pump Overflow Pipe	1
	Blueprint, 54480 DB, Injection Pump Overflow Pipe	1
	Blueprint, 55786 D, Injection Pump Overflow Pipe	1
60740 D	Breather, Complete	
§ 54310 D	Breather Spring Ring	1
§ 54311 D	Breather Perforated Plate	1
§ 54312 D	Breather Filtering Element (1 Ounce)	1
§ 61107 DX	Breather Bushing with Plate	1
§ 61109 D	Breather Cover	1
§ 61110 D	Breather Shell	1

§ Not supplied separately

X As required

PART NUMBER	DESCRIPTION	NO. PER ASS'Y
60803 DA	CYLINDER SLEEVE WITH PISTON, COMPLETE	
§ 8287 DR	CYLINDER SLEEVE	1
§ 9111 DR	PISTON	1
§ 47643 DA	PISTON PIN (STANDARD) (52608 DA FOR SERVICE)	1
67812 D	PISTON RING, 1/4" (OIL REGULATING)	1
50956 D	PISTON RING, 5/32" (COMPRESSION PLAIN)	2
52754 D	PISTON RING, 5/32" (COMPRESSION TAPER)	1
31194 H	PISTON PIN RETAINER RING	2
60870 D	WATER TRAP, COMPLETE	
9118 DX	WATER TRAP TOP WITH PLUG, 24805 D	1
60871 DA	WATER TRAP VENT SCREW	1
60872 D	WATER TRAP SCREEN	1
60876 D	WATER TRAP BOWL GASKET	1
60877 D	WATER TRAP GLASS BOWL	1
60878 DX	WATER TRAP BAIL, COMPLETE	1
60878 DX	WATER TRAP BAIL, COMPLETE	
§ 60878 D	WATER TRAP BAIL	1
§ 60879 D	WATER TRAP BAIL TAPPING BLOCK	1
§ 60880 D	WATER TRAP GLASS RETAINER	1
§ 60882 D	WATER TRAP BAIL THUMB SCREW	
61206 D	INJECTION NOZZLE FIELD IMPROVEMENT PACKAGE	
42765 DAX	NOZZLE BODY RETAINER WITH DUST SEALS, 61208 D AND 61209 D	4
42766 D	NOZZLE BODY	4
42767 D	NOZZLE BODY GASKET	4
61263 DX	LIGHTING SWITCH, COMPLETE	
64022 H	SWITCH HANDLE MOUNTING SCREW	1
57312 D	SWITCH MOUNTING NUT	1
57313 D	SWITCH KNOB	1
§ 61263 D	LIGHTING SWITCH, 6 VOLT	1
49425 H	LIGHTING SWITCH LOCKWASHER (SHAKEPROOF)	1
	LOCKWASHER, NO. 8	1
61918 DX	PUMP HOUSING, COMPLETE	
54299 D	CONTROL ROD BUSHING	2
59708 D	LUBRICATING OIL LEVEL COCK	1
§ 61918 D	INJECTION PUMP HOUSING	1
61956 D	FUEL SUPPLY PUMP STUD	3
61958 D	LUBRICATING OIL DRAIN PLUG	
61959 DX	PUMP HOUSING BAFFLE, WITH BUTTON	
	PIPE PLUG, 1/8"	1
	PIPE PLUG, 1/4"	1

§ NOT SUPPLIED SEPARATELY

PART NUMBER	DESCRIPTION	NO. USED PER ASSEMBLY
62125 D	FUEL SUPPLY PUMP, COMPLETE	
40385 D	VALVE INLET AND OUTLET	2
40386 D	TAPPET SHELL	1
40388 D	TAPPET WRIST PIN	1
40390 D	TAPPET ROLLER	1
40395 D	TAPPET SPRING	1
40397 D	VALVE SPRING RETAINING SCREW	2
43189 D	SECURING PIN	1
54366 D	PLUNGER SPRING	1
§ 54367 D	PLUNGER SPRING RETAINING SCREW WITH PLUG	1
54371 D	VALVE SPRING	2
61111 D	PLUNGER SPRING RETAINING SCREW GASKET	1
§ 62126 DY	FUEL SUPPLY PUMP HOUSING PLUNGER AND SPINDLE, COMPLETE	1
62129 D	VALVE SPRING RETAINER SCREW GASKET	2
62126 DY	FUEL SUPPLY PUMP HOUSING, PLUNGER AND SPINDLE, COMPLETE	
§ 54365 D	PLUNGER	1
§ 54370 D	SPINDLE	1
§ 62126 D	FUEL SUPPLY PUMP HOUSING	1
	PIPE PLUG, 1/8"	1
	PIPE PLUG, 1/4"	2
62159 DX	BUCKET LUBRICATOR CONTAINER COVER PLATE, COMPLETE	
37290 D	BUCKET LUBRICATOR HOSE GIANT BUTTON HEAD FITTING	1
62158 D	BUCKET LUBRICATOR PUMP CASTING	1
62159 D	BUCKET LUBRICATOR CONTAINER COVER PLATE	1
52745 V	BUCKET LUBRICATOR CONTAINER COVER PLATE WASHER (SHAKEPROOF NO. 1214)	3
	CAP SCREW, 1/4 x 7/16" N.C. HEX. HEAD, THROUGH PUMP CASTING	3
62193 D	DRIVE GEAR, COMPLETE	
54411 D	DRIVE GEAR ADJUSTING SPACER (.035)	x
54412 D	DRIVE GEAR ADJUSTING SPACER (.049)	x
54413 D	DRIVE GEAR ADJUSTING SPACER (.065)	x
54416 D	DRIVE GEAR ADJUSTING NUT	1
§ 62194 D	DRIVE GEAR HUB	1
62195 D	DRIVE GEAR	1
62196 D	DRIVE GEAR SPRING DISC, INNER	1
62197 D	DRIVE GEAR SPRING DISC, OUTER	1
62198 D	DRIVE GEAR ADJUSTING NUT LOCKWASHER	1
62622 D	DRIVE GEAR ADJUSTING SPACER (.020)	x
62200 D	GOVERNOR END COVER, COMPLETE	
54434 D	GOVERNOR OPERATING LEVER SHAFT OIL SEAL	1
54435 D	GOVERNOR OPERATING LEVER SHAFT BUSHING	2
54441 D	CLOSING PLUG	1
§ 62202 D	GOVERNOR END COVER	1
62207 D	GOVERNOR END COVER DOWEL PIN	2
62208 D	BUMPER SPRING	1
67980 H	BUMPER SPRING LOCKWASHER	1
	SLOTTED SCREW, NO. 12 - 24 x 5/16" N.C. FILLISTER HEAD (CADMIUM PLATED)	1

§ NOT SUPPLIED SEPARATELY

X AS REQUIRED

PART NUMBER	DESCRIPTION	NO. USED PER ASSY
62213 D	GOVERNOR WEIGHT AND SHAFT, COMPLETE	
62214 D	GOVERNOR WEIGHT SHAFT AND SPIDER	1
62217 DX	GOVERNOR WEIGHT WITH 2 BUSHINGS, 62218 D	1
62219 D	GOVERNOR WEIGHT PIN	2
62220 D	GOVERNOR WEIGHT WASHER	4
62221 D	GOVERNOR WEIGHT SHAFT BEARING (DRIVE END)	1
62222 D	GOVERNOR DRIVEN GEAR	1
62223 D	GOVERNOR DRIVEN GEAR LOCKWASHER	1
62224 D	GOVERNOR DRIVEN GEAR NUT	1
62225 DX	BEARING SUPPORT PLATE WITH CAGE	1
	COTTER PIN, 1/16 x 7/8"	4
62267 DX	STOP PLATE BRIDGE, COMPLETE	
55428 DA	STOP PLATE SCREW WASHER	1
§ 62267 D	STOP PLATE BRIDGE	1
OR 68625 D	STOP PLATE BRIDGE	1
62268 DX	STOP PLATE WITH PIN AND SCREW	1
	HEX. JAM NUT, 1/4" N.F.	1
62488 D	HEAVY FRONT IDLER ATTACHMENT	
9413 DX	FRONT IDLER WITH BUSHING AND 2 OIL SEALS, 53358 DA	2
46839 DB	TRACK SHOE (13")	2
49362 D	TRACK SHOE BOLT	8
53245 DA	TRACK LINK (L.H.)	2
53246 DA	TRACK LINK (R.H.)	2
53248 D	TRACK LINK BUSHING	2
53249 D	TRACK LINK PIN	2
53358 DA	FRONT IDLER OIL SEAL	4
53400 DX	FRONT IDLER BUSHING (SET OF 2)	2
60221 DA	TRACK SHOE NUT	8
62486 DA	FRONT IDLER ADJUSTER	2
65122 D	TRACK, COMPLETE	2
65123 D	TRACK WITH 13" SHOE, COMPLETE	2
62945 DA	AUXILIARY FUEL FILTER ELEMENT, COMPLETE	
62946 DA	AUXILIARY FUEL FILTER ELEMENT	1
62948 D	AUXILIARY FUEL FILTER TOP PLATE	1
64520 DA	AUXILIARY FUEL FILTER BOTTOM PLATE	1
64521 D	AUXILIARY FUEL FILTER BOTTOM PLATE GASKET	1
63139 DMX	STARTING CRANK, COMPLETE	
§ 4709 D	STARTING CRANK SLEEVE	1
6935 D	STARTING CRANK RATCHET	1
§ 41417 D	STARTING CRANK BUSHING	1
§ 63139 DM	STARTING CRANK	1
G 3754	STARTING CRANK RATCHET PIN	1
63789 D	GENERATOR MOUNTING PACKAGE	
§ 9379 D	BRACKET	1
§ 26080 DB	STRAP	1
§ 52313 DA	BELT	1
§ 63787 D	BRACKET BRACE	1
§ 63788 D	BRACE	1

§ NOT SUPPLIED SEPARATELY

PART NUMBER	DESCRIPTION	NO. USED PER ASSEMBLY
54001 D	TRACK FRAME, L.H. COMPLETE	
§ 47967 D	TRACK FRAME CENTER SPACER	1
§ 47968 D	TRACK FRAME OUTER SPACER	2
§ 47972 D	TRACK FRAME ANGLE L.H.	1
§ 53221 D	TRACK FRAME GUSSET	2
§ 60366 D	TRACK FRAME TAPPING BLOCK	4
§ 63988 D	TRACK FRAME INNER SPACER	1
63989 D	TRACK FRAME CROSS BAR STUD, SHORT	2
63990 D	TRACK FRAME CROSS BAR STUD, LONG	2
§ 63991 D	TRACK FRAME SIDE CHANNEL REINFORCING PLATE, OUTER L.H.	1
§ 63993 D	TRACK FRAME SIDE CHANNEL REINFORCING PLATE, INNER L.H.	1
§ 63997 D	TRACK FRAME SIDE CHANNEL, INNER L.H.	1
63999 D	TRACK FRAME SIDE CHANNEL, OUTER L.H.	1
64002 D	TRACK FRAME, R.H. COMPLETE	
§ 47967 D	TRACK FRAME CENTER SPACER	1
§ 47968 D	TRACK FRAME OUTER SPACER	2
§ 47973	TRACK FRAME ANGLE R.H.	1
§ 53221 D	TRACK FRAME GUSSET	2
§ 60366 D	TRACK FRAME TAPPING BLOCK	4
§ 63988 D	TRACK FRAME INNER SPACER	1
63989 D	TRACK FRAME CROSS BAR STUD, SHORT	2
63990 D	TRACK FRAME CROSS BAR STUD, LONG	2
§ 63992 D	TRACK FRAME SIDE CHANNEL REINFORCING PLATE, OUTER R.H.	1
§ 63994 D	TRACK FRAME SIDE CHANNEL REINFORCING PLATE, INNER R.H.	1
§ 63998 D	TRACK FRAME SIDE CHANNEL, INNER R.H.	1
§ 64000 D	TRACK FRAME SIDE CHANNEL, OUTER R.H.	1
64010 DA	EXTENDED TRACK FRAME ATTACHMENT	
8404 D	TRACK ROLLER SHAFT BRACKET, INNER	2
8405 D	TRACK ROLLER SHAFT BRACKET, OUTER	2
22307 H	TRACK FRAME PIVOT BRACKET BOLT LOCKWASHER	4
46839 DB	TRACK SHOE (13 INCH)	4
49362 D	TRACK SHOE BOLT	16
53245 DA	TRACK LINK, L.H.	4
53246 DA	TRACK LINK, R.H.	4
53248 D	TRACK LINK BUSHING	4
53249 DA	TRACK LINK PIN	4
53365 DA	TRACK ROLLER, COMPLETE	2
53367 D	TRACK ROLLER WITH BUSHING (NOS. 1, 3 AND 5) 53363 DX AND 2 OIL SEALS 53358 DA	2
53372 DX	TRACK ROLLER BUSHING (SET OF 2)	2
60221 DA	TRACK SHOE NUT	16
63987 D	RIGID TRACK FRAME CROSS BAR CLAMP	4
63996 DA	FRONT IDLER ADJUSTER	2
64001 DA	TRACK FRAME, COMPLETE, L.H.	1
64002 DA	TRACK FRAME, COMPLETE, R.H.	1
64003 D	TRACK ROLLER SHIELD, INNER, L.H.	1
64004 D	TRACK ROLLER SHIELD, INNER, R.H.	1
64005 D	TRACK ROLLER SHIELD, OUTER, L.H.	1
64006 D	TRACK ROLLER SHIELD, OUTER, R.H.	1
65259 D	TRACK	2
65260 D	TRACK WITH SHOES (13 INCH)	2
	CAP SCREW, 1/2 x 1-3/8" N.F. HEX HEAD (FOR 53539 DAX SPROCKET SHIELD)	8
	LOCKWASHER, 1/2"	8
	CAP SCREW, 1/2 x 1-1/8" N.F. HEX HEAD (FOR 8451 DA TRACK FRAME PIVOT BRACKET)	36
	LOCKWASHER, 1/2"	36

§ - NOT SUPPLIED SEPARATELY

PART NUMBER	DESCRIPTION	NO. USED PER ASS
64193 D	GOVERNOR WEIGHT AND SHAFT, COMPLETE	
62214 D	GOVERNOR WEIGHT SHAFT AND SPIDER	1
62220 D	GOVERNOR WEIGHT WASHER	4
62221 D	GOVERNOR WEIGHT SHAFT BEARING (DRIVE END)	1
62222 D	GOVERNOR DRIVEN GEAR	1
62223 D	GOVERNOR DRIVEN GEAR LOCKWASHER	1
62224 D	GOVERNOR DRIVEN GEAR NUT	1
62225 DX	BEARING SUPPORT PLATE WITH CAGE	1
64189 D	GOVERNOR WEIGHT WASHER, NEEDLE BEARING SIDE	4
64190 D	GOVERNOR WEIGHT PIN	2
64192 D	GOVERNOR WEIGHT WITH BUSHING, 62218 D AND BEARING, 64191 D	2
	COTTER PIN, 1/16 x 5/8" (CADMIUM PLATED)	4
64341 D	SEAT CUSHION SIDE, COMPLETE	
§ 64342 D	RETAINER STRIP	1
§ 64343 D	BOTTOM PAD	1
§ 64344 D	PLATE	1
§ 54345 D	PADDING	1
§ 64346 D	COVER	1
	WELDING NUT, 3/8" N.C.	1
64452 D	CYLINDER SLEEVE WITH PISTON, COMPLETE (GREY IRON)	
§ 8429 DAR	CYLINDER SLEEVE	1
§ 9358 DAR	PISTON	1
§ 47643 DA	PISTON PIN (STANDARD) (52608 DA FOR SERVICE)	1
47953 D	PISTON RING, 1/4" (OIL REGULATING)	2
50954 D	PISTON RING, 1/8" (COMPRESSION, TOP)	1
50955 D	PISTON RING, 3/16" (COMPRESSION, LOWER)	[illegible]
50956 D	PISTON RING, 5/32" (COMPRESSION, INTERMEDIATE)	1
31194 H	PISTON PIN RETAINER RING	2
64479 DXA	CRANKCASE FRONT PLATE, COMPLETE	
46250 D	CRANKCASE FRONT PLATE CAPSCREW LOCK	3
60131 DA	INJECTION PUMP BOLT	2
§ 64479 D	CRANKCASE FRONT PLATE	1
67944 D	INJECTION PUMP BOLT	2
21336 H	INJECTION PUMP BOLT LOCKWASHER	2
	WELDING NUT, 3/8" N.C.	1
	NUT, 3/8" N.C., STANDARD ACORN	2
	WASHER, 13/32" I.D. x 13/16" O.D. x No. 16 GA.	2
64490 DA	SPROCKET DRIVE GEAR, COMPLETE	
46794 DA	SPROCKET DRIVE GEAR CARRIER NUT	1
§ 52228 DA	SPROCKET DRIVE GEAR CARRIER	1
64489 D	SPROCKET DRIVE GEAR	1
	RIVET, 1/2 x 1-7/8" ROUND HEAD	10
64574 D	GOVERNOR CONTROL, COMPLETE	
6649 D	GOVERNOR CONTROL FRICTION DISC RETAINER, INNER	1
9446 DAX	CROSS SHAFT BRACKET WITH PIN, 45391 D	1
9447 DX	GOVERNOR CONTROL LEVER WITH PINS, 25115 D AND 54971 D	1
48356 D	GOVERNOR CONTROL FRICTION DISC	2
48358 D	GOVERNOR CONTROL FRICTION SPRING	1
48359 D	GOVERNOR CONTROL FRICTION SPRING NUT	1
64543 D	GOVERNOR CONTROL DISC (STATIONARY)	1
64544 D	LOW IDLE POPPET	[illegible]
64545 D	LOW IDLE POPPET SPRING	[illegible]

§ - NOT SUPPLIED SEPARATELY

PART NUMBER	DESCRIPTION	NO. USED PER ASSEMBLY
54675 D	Discharge Fitting, Complete	
59614 DA	Discharge Fitting Lock	1
59615 DA	Discharge Fitting Lock Nut	1
59616 D	Discharge Fitting Lock Screw	1
64676 D	Discharge Fitting	1
65111 D	Track Chain, Complete	
43712 DB	Track Master Link Pin Lockwire	3
53245 DA	Track Link, L.H.	33
53246 DA	Track Link, R.H.	30
53247 DA	Track Master Link	3
53248 D	Track Link Bushing	33
53249 DA	Track Link Pin	30
53250 D	Track Master Link Pin	3
65112 D	Track Chain, Complete with 13" Shoes	
46839 DA	Track Shoe, 13"	33
49362 D	Track Shoe Cap Screw	132
60221 DA	Track Shoe Cap Screw	132
65111 D	Track Chain, Complete	1
	Track Shoe Capscrew Lockwasher, 7/16"	132
65122 D	Track Chain, Complete	
43712 DB	Track Master Link Pin Lockwire	1
53245 DA	Track Link, L.H.	34
53246 DA	Track Link, R.H.	31
53247 DA	Track Master Link	1
53248 D	Track Link Bushing	34
53249 DA	Track Link Pin	31
53250 D	Track Master Link Pin	1
65123 D	Track Chain, Complete with 13" Shoes	
43712 DB	Track Master Link Pin Lockwire	1
46839 DA	Track Shoe, 13"	34
49362 D	Track Shoe Cap Screw	136
53245 DA	Track Link, L.H.	34
53246 DA	Track Link, R.H.	31
53247 DA	Track Master Link	1
53248 D	Track Link Bushing	34
53249 DA	Track Link Pin	31
53250 D	Track Master Link Pin	1
60221 DA	Track Shoe Capscrew Nut	136
	Track Shoe Capscrew Lockwasher, 7/16"	136
65259 D	Track Chain, Complete	
43712 DB	Track Master Link Pin Lockwire	3
53245 DA	Track Link L.H.	36
53246 DA	Track Link R.H.	33
53247 DA	Track Master Link	3
53248 D	Track Link Bushing	36
53249 DA	Track Link Pin	33
53250 D	Track Master Link Pin	3
65260 D	Track Chain, 65259 D with 13" Shoes, Complete	
46839 DB	Track Shoe, 13"	36
49362 D	Track Shoe Cap Screw	144
60221 DA	Track Shoe Capscrew Nut	144
65259 D	Track Chain, Complete	1

DETAILS OF ASSEMBLY

GENUINE IHC PARTS

PART NUMBER	DESCRIPTION	NO. PER ASSEMBLY
66011 DA	Distributor Block, Complete	
59603 D	Distributor Valve Spring	4
59606 D	Distributor Block Dowel	2
§ 65015 D	Distributor Block Plug	2
§ 66000 DA	Distributor Block	1
§ 66002 D	Distributor Block Cap Screw	4
66005 D	Distributor Valve Bushing Upper Gasket (.033" Thick)	x
66007 D	Distributor Valve Bushing Lower Gasket	4
66008 D	Distributor Valve Bushing Clamp	4
66010 D	High Pressure Pipe Screw	2
67979 D	Distributor Valve Bushing Upper Gasket (.031" Thick)	x
67980 D	Distributor Valve Bushing Upper Gasket (.033" Thick)	x
68012 D	Distributor Valve and Bushing	4
66108 DB	Primary Pump Unit, Complete	
8974 DXA	Primary Pump Housing, Complete	1
59732 D	Primary Pump Housing Cover Gasket, (.006" Thick)	x
59733 DAX	Primary Pump Shaft with Coupling, 59736 D and Rivet, 61927 D	1
59737 D	Primary Pump Packing	1
59738 D	Primary Pump Packing Gland	1
59739 D	Primary Pump Packing Spring	1
59740 D	Primary Pump Packing Spring Nut	1
59741 DA	Primary Pump Pressure Gear	1
59742 DX	Primary Pump Idler Gear with Bushing, 59730 D	2
59743 D	Scavenging Pump Drive Gear	1
59744 D	Primary Pump Scavenging Gear Gasket, (.006" Thick)	x
64060 D	Primary Pump Shaft Key	2
64870 D	Primary Pump Housing Cover Gasket, (.004" Thick)	x
64871 D	Primary Pump Scavenging Gear Gasket, (.004" Thick)	x
65210 D	Primary Pump Shaft Snap Ring	1
67922 D	Primary Pump Filter	1
68389 D	Primary Pump Housing Cover, Complete	1
	Fillister Head Machine Screw, No. 8 - 32 x 3/8"	3
67058 D	Track Chain, Complete with 15" Shoes	
9245 DA	Track Shoe 15"	12
36970 D	Track Shoe Bolt	48
60221 DA	Track Shoe Bolt Nut	48
65122 D	Track Chain, Complete	1
67670 D	Hood Side Door Attachment	
27159 DB	Hood Side Door Fastener	4
54860 D	Choke Control Rod and Button, Assembly	1
67669 DX	Hood Sheet	1
67671 DX	Hood Side Door, L.H.	1
67672 DX	Hood Side Door, R.H.	1
	Rivet, 3/16 x 5/8" Round Head Iron	2
67796 D	Governor End Cover, Complete	
54434 D	Operating Lever Shaft Oil Seal	1
54435 D	Operating Lever Shaft Bushing	2
54441 D	Closing Plug	1
62207 D	Governor End Cover Dowel Pin	2
62208 D	Bumper Spring	1
§ 67798 D	Governor End Cover	1
67980 H	Bumper Spring Lockwasher	1
	Machine Screw, No. 12-24 x 5/16" Fillister Head, (Cadmium Plated)	1

§ - Not Supplied Separately

X - As Required

(Revised 2-'46)

PRINTED IN UNITED STATES OF AMER

PART NUMBER	DESCRIPTION	NO. USED PER ASSEMBLY
67922 D	PRIMARY PUMP FILTER, COMPLETE	
67919 D	PRIMARY PUMP FILTER GASKET	1
67923 D	PRIMARY PUMP FILTER BODY	1
67924 D	PRIMARY PUMP FILTER SCREEN	1
68315 D	WATER PUMP BODY, COMPLETE	
§ 6586 D	WATER PUMP BODY	1
20303 D	WATER PUMP SHAFT THRUST BUSHING	1
24017 D	WATER PUMP SHAFT BUSHING	1
§ 45982 D	WATER PUMP SHAFT SLEEVE	1
68389 D	PRIMARY PUMP HOUSING COVER, COMPLETE	
9708 D	PRIMARY PUMP HOUSING COVER	1
66002 D	PRIMARY PUMP SCREW	1
68388 D	PRIMARY PUMP HOUSING COVER SCREW	1
68630 D	STEERING BRAKE BAND LINING, WOVEN, COMPLETE	
§ 47961 DA	STEERING BRAKE BAND LINING, WOVEN	3
21406 H	STEERING BRAKE BAND LINING RIVET .186 x 3/8" (TYPE "C" PLAIN BRASS)	38
21444 H	STEERING BRAKE BAND LINING RIVET .186 x 1/2" (TYPE "C" PLAIN BRASS)	4
68632 D	STEERING BRAKE BAND (WITH MOULDED LINING), COMPLETE	
§ 47958 D	STEERING BRAKE BAND, CENTER	1
47962 D	STEERING BRAKE BAND JOINT PIN	2
§ 68531 D	STEERING BRAKE BAND, FRONT	1
§ 68532 D	STEERING BRAKE BAND, REAR	1
68636 D	STEERING BRAKE BAND LINING, MOULDED, COMPLETE	1
	COTTER PIN, 3/32 x 1"	2
68636 D	STEERING BRAKE BAND LINING - MOULDED, COMPLETE	
§ 68542 D	STEERING BRAKE BAND LINING - MOULDED, CENTER	1
§ 68543 D	STEERING BRAKE BAND LINING - MOULDED, FRONT AND REAR	2
21406 H	STEERING BRAKE BAND LINING RIVET .186 x 3/8" (TYPE "C" PLAIN BRASS)	34
21444 H	STEERING BRAKE BAND LINING RIVET .186 x 1/2" (TYPE "C" PLAIN BRASS)	4
ZG 4020	INSTALLATION DIAGRAM, BRAKE BAND WITH MOULDED LINING	1
68782 D	CYLINDER SLEEVE WITH PISTON, COMPLETE (STANDARD)	
§ 8287 DR	CYLINDER SLEEVE	1
§ 9721 DR	PISTON	1
§ 47643 DA	PISTON PIN	1
47953 D	PISTON RING, 1/4" (OIL REGULATING)	2
50956 D	PISTON RING, 5/32" (COMPRESSION, PLAIN)	2
52754 D	PISTON RING, 5/32" (COMPRESSION, TAPER FACE)	1
31194 H	PISTON PIN RETAINER RING	2
68784 D	CYLINDER SLEEVE WITH PISTON, COMPLETE	
§ 8287 DR	CYLINDER SLEEVE	1
§ 9722 DR	PISTON	1
§ 47643 DA	PISTON PIN	1
47953 D	PISTON RING, 1/4" (OIL REGULATING)	2
50956 D	PISTON RING, 5/32" (COMPRESSION, PLAIN)	2
52754 D	PISTON RING, 5/32" (COMPRESSION, TAPER FACE)	1
31194 H	PISTON PIN RETAINER RING	2

§ - NOT SUPPLIED SEPARATELY

DETAILS OF ASSEMBLY

PART NUMBER	DESCRIPTION	NO. USED IN ASSEMBLY
68786 D	CYLINDER SLEEVE WITH PISTON, COMPLETE	
§ 8287 DR	CYLINDER SLEEVE	1
§ 9723 DR	PISTON	1
§ 47643 DA	PISTON PIN	1
47953 D	PISTON RING, 1/4" (OIL REGULATING)	2
50956 D	PISTON RING, 5/32" (COMPRESSION, PLAIN)	2
52754 D	PISTON RING, 5/32" (COMPRESSION, TAPER FACE)	1
31194 H	PISTON PIN RETAINER RING	2
68788 D	CYLINDER SLEEVE WITH PISTON, COMPLETE	
§ 8287 DR	CYLINDER SLEEVE	1
§ 9748 DR	PISTON	1
§ 47643 DA	PISTON PIN	1
47953 D	PISTON RING, 1/4" (OIL REGULATING)	2
50956 D	PISTON RING, 5/32" (COMPRESSION, PLAIN)	2
52754 D	PISTON RING, 5/32" (COMPRESSION, TAPER FACE)	1
31194 H	PISTON PIN RETAINER RING	2
69238 D	FULCRUM LEVER WITH BRACKET, COMPLETE	
62237 DX	FULCRUM LEVER WITH 2 PINS	1
62243 DA	FULCRUM LEVER BRACKET	1
62246 DX	CONTROL ROD LINK	1
62247 D	CONTROL ROD LINKAGE PIN	1
62248 D	CONTROL ROD LINK PIN	1
62249 D	CONTROL ROD LINK PIN WASHER	2
64161 D	FULCRUM LEVER BRACKET PIN	1
52745 V	CONTROL ROD LINKAGE PIN LOCKWASHER	1
	HEX NUT, 1/4" N.F.	1
	COTTER PIN, 1/16 x 7/16"	2
	COTTER PIN, 1/16 x 5/8"	1
69332 D	FUEL SUPPLY PUMP REPLACEMENT PACKAGE	
29899 D	OIL LEVER EQUALIZING TUBE ELBOW NUT (FOR PUMPS EQUIPPED WITH EQUALIZING TUBE ONLY)	1
37165 D	FUEL FILTER INLET PIPE NUT	x
37165 D	PRIMARY PUMP INLET PIPE NUT (WATER TRAP END)	x
37402 D	OIL LEVEL EQUALIZING TUBE ELBOW (FOR PUMPS EQUIPPED WITH EQUALIZING TUBE ONLY)	1
37402 DX	OIL LEVEL EQUALIZING TUBE ELBOW WITH NUT, 29899 D	
	(FOR PUMPS EQUIPPED WITH EQUALIZING TUBE ONLY)	x
38026 DM	PRIMARY PUMP INLET PIPE CONNECTOR	1
38026 DMX	PRIMARY PUMP INLET PIPE CONNECTOR WITH NUT, 37165 D	x
50607 D	FUEL FILTER INLET PIPE ELBOW	1
50607 DX	FUEL FILTER INLET PIPE ELBOW WITH NUT, 37165 D	x
62125 D	FUEL SUPPLY PUMP, COMPLETE	1
69351 DX	PRIMARY PUMP INLET PIPE WITH 2 NUTS, 37165 D	1
69353 DX	FUEL FILTER INLET PIPE WITH 2 NUTS, 37165 D	1
69450 D	CONTROL RACK, COMPLETE	
59688 D	CONTROL RACK ADJUSTMENT ROD NUT RIVET	1
69449 D	CONTROL RACK	1
59715 DA	CONTROL RACK ADJUSTMENT ROD	1
59716 D	CONTROL RACK ADJUSTMENT ROD NUT	1
59717 D	CONTROL RACK ADJUSTMENT ROD LOCK NUT	1

§ - NOT SUPPLIED SEPARATELY

(Revised 2-'46)

PRINTED IN UNITED STATES OF AMERICA

PART NUMBER	DESCRIPTION	NO. USED PER ASSEMBLY
12059 GT	Equalizer Spring Unit	
2060 GT	Equalizer Spring	1
12061 GT	Equalizer Spring Rebound Bracket	2
12062 GT	Equalizer Spring Leaf No. 1	1
12063 GT	Equalizer Spring Leaf No. 2	1
12064 GT	Equalizer Spring Leaf No. 3	1
12065 GT	Equalizer Spring Leaf No. 4	1
60476 DX	Equalizer Spring Center Bolt, Complete	1
	Cap Screw, 5/8 x 1-3/4" N.F. Hex Head	2
	Cap Screw, 5/8 x 2-1/4" N F. Hex Head	4
	Hex Nut, 5/8" N F.	6
	Lockwasher, 5/8"	6
	Hex Nut, 1/2" N.F.	1
250251 R91	Drawbar Unit	
47771 D	Drawbar Pivot Pin	1
47772 D	Drawbar Pivot Pin Lock	1
47773 D	Drawbar Guide	1
47775 D	Drawbar Stop Pin	1
47776 D	Drawbar Clevis Pin	1
53921 D	Drawbar	1
53923 D	Drawbar Upper Jaw	1
53924 D	Drawbar Jaw Spacer	1
53925 D	Drawbar Clevis Wear Plate	2
	Cap Screw, 3/8" x 1" N.F. Hex Head	1
	Lockwasher, 3/8"	1
	Cap Screw, 7/8 x 4-1/2" N.F. Hex Head	1
	Hex Nut, 7/8" N.F.	1
	Lockwasher, 7/8"	1
	Cotter Pin, 1/4 x 1-1/2"	1
	Rivet, 1 x 4-3/8" Round Head	1
	Cap Screw, 1 x 6-1/4" Hex Head	1
	Hex Nut, 1" N.F.	1
	Lockwasher, 1"	1
251713 R91	Extended Track Frame Unit	
3404 D	Track Roller Shaft Bracket, Inner	2
3405 D	Track Roller Shaft Bracket, Outer	2
22307 H	Track Frame Pivot Bracket Bolt Lockwasher (Shakeproof No. 1228)	4
53365 DA	Track Roller with Shaft and Carriers, Complete	2
53367 D	Track Roller with Bushings, Complete	2
53372 DX	Track Roller Bushing Set, Complete	2
63996 DA	Front Idler Adjuster	2
64003 D	Track Roller Shield, Inner, L.H.	1
64004 D	Track Roller Shield, Inner, R.H.	1
64005 D	Track Roller Shield, Outer, L.H.	1
64006 D	Track Roller Shield, Outer, R.H.	1
67727 DA	Track Frame, Complete, L.H.	1
67728 DA	Track Frame, Complete, R.H.	1
	Cap Screw, 1/2 x 1-3/8" N.F. Hex Head	28
	Lockwasher, 1/2"	28
	Cap Screw, 1/2 x 1-1/8" N.F. Hex Head	36
	Lockwasher, 1/2"	36
251714 R91	Large Diameter Heavy Front Idler Attachment	
9314 DX	Heavy Front Idler with Bushings and 2 Oil Seals 53358 DA	2
53358 DA	Front Idler Oil Seal	4
53400 DX	Front Idler Bushing (Set of 2)	2
62486 DA	Heavy Front Idler Adjuster	2

SUFFIX LETTER CODE

To facilitate the servicing of the TracTracTors equipped with special features we have assigned a suffix letter code to the tractor serial number as a means of identification. This code applies to special features that replace standard parts or units only and have not coded Attachments that do not effect replacement of standard parts or units.

(Example: TCB-2223T7B; this indicates the TracTracTor is a Wide Tread with High Speed Gears and Heavy Duty Track Roller Shield.)

NOTE: The suffix letter code appearing with the serial number after TCB-2223 is used upon TracTracTors with special features as follows:

T 1	Gasoline									
T 2	Modified									
T 3	Kerosene									
T 4	U. S. Army									
T 4 M	U. S. Marine Corps									
T 4 N	U. S. Navy									
T 5	5000 ft. Altitude									
T 6	Low Speed Gear									
T 6 A	"	—Heavy Duty Track Roller Shield								
T 6 B	"	—	"	—Rigid Track Frame						
T 6 C	"	—	"	—	"	—Front Power Take-Off				
T 6 D	"	—	"	—	"	—	"	—Light. or Starting (Delco-Remy)		
T 6 E	"	—	"	—	"	—	"	—	"	(Delco-Remy Heavy Duty)
T 6 F	"	—	"	—	"	—	"	—Lighting (Robert Bosch)		
T 6 G	"	—Rigid Track Frame								
T 6 H	"	—	"	—Front Power Take-Off						
T 6 J	"	—	"	—	"	—Lighting or Starting (Delco-Remy)				
T 6 K	"	—	"	—	"	—	"	(Delco-Remy Heavy Duty)		
T 6 L	"	—	"	—	"	—Lighting (Robert Bosch)				
T 6 M	"	—Front Power Take-Off								
T 6 N	"	—	"	—Lighting or Starting (Delco-Remy)						
T 6 P	"	—	"	—	"	(Delco-Remy Heavy Duty)				
T 6 R	"	—	"	—Lighting (Robert Bosch)						
T 6 S	"	—Light. or Starting (Delco-Remy)								
T 6 T	"	—	"	(Delco-Remy Heavy Duty)						
T 6 U	"	—Lighting (Robert Bosch)								
T 7	Wide Tread									
T 7 A	"	—High Speed Gear								
T 7 B	"	—	"	—Heavy Duty Track Roller Shield						
T 7 C	"	—	"	—	"	—Rigid Track Frame				
T 7 D	"	—	"	—	"	—	"	—Front Power Take-Off		
T 7 E	"	—	"	—	"	—	"	—	"	—Light. or Starting (Delco-Remy)
T 7 F	"	—	"	—	"	—	"	—	"	— " (Delco-Remy Heavy Duty)
T 7 G	"	—	"	—	"	—	"	—	"	—Lighting (Robert Bosch)
T 7 H	"	—	"	—Rigid Track Frame						
T 7 J	"	—	"	—	"	—Front Power Take-Off				
T 7 K	"	—	"	—	"	—	"	—Light. or Starting (Delco-Remy)		
T 7 L	"	—	"	—	"	—	"	—	"	(Delco-Remy Heavy Duty)
T 7 M	"	—	"	—	"	—	"	—Lighting (Robert Bosch)		

PRINTED IN UNITED STATES OF AMERICA

T 7 N	Wide Tread	—High Speed Gear	—Front Power Take-Off							
T 7 P	"	—	"	—	"	—Light. or Starting (Delco-Remy)				
T 7 R	"	—	"	—	"	—	"	(Delco-Remy Heavy Duty)		
T 7 S	"	—	"	—	"	—Lighting (Robert Bosch)				
T 7 T	"	—	"	—Light. or Starting (Delco-Remy)						
T 7 U	"	—	"	—	"	(Delco-Remy Heavy Duty)				
T 7 V	"	—	"	—Lighting (Robert Bosch)						
T 7 W	"	—	"	—Heavy Duty Track Roller Shield—Front Power Take-Off—Light. or Starting (Delco-Remy Heavy Duty)						
T 7 X	"	—	"	—Cutaway Sprocket—Light. or Starting (Delco-Remy Heavy Duty)						
T 7 AA	"	—Low Speed Gear								
T 7 AB	"	—	"	—Heavy Duty Track Roller Shield						
T 7 AC	"	—	"	—	"	—Rigid Track Frame				
T 7 AD	"	—	"	—	"	—	"	—Front Power Take-Off		
T 7 AE	"	—	"	—	"	—	"	—	"	—Lighting or Starting (Delco-Remy)
T 7 AF	"	—	"	—	"	—	"	—	"	— " (Delco-Remy Heavy Duty)
T 7 AG	"	—	"	—	"	—	"	—	"	—Lighting (Robert Bosch)
T 7 AH	"	—	"	—Rigid Track Frame						
T 7 AJ	"	—	"	—	"	—Front Power Take-Off				
T 7 AK	"	—	"	—	"	—	"	—Light. or Starting (Delco-Remy)		
T 7 AL	"	—	"	—	"	—	"	—	"	(Delco-Remy Heavy Duty)
T 7 AM	"	—	"	—	"	—	"	—Lighting (Robert Bosch)		
T 7 AN	"	—Low Speed Gear	—Front Power Take-Off							
T 7 AP	"	—	"	—	"	—Light. or Starting (Delco-Remy)				
T 7 AR	"	—	"	—	"	—	"	(Delco-Remy Heavy Duty)		
T 7 AS	"	—	"	—	"	—Lighting (Robert Bosch)				
T 7 AT	"	—	"	—Light or Starting (Delco-Remy)						
T 7 AU	"	—	"	—	"	(Delco-Remy Heavy Duty)				
T 7 AV	"	—	"	—Lighting (Robert Bosch)						
T 7 BA	"	—Heavy Duty Track Roller Shield								
T 7 BC	"	—	"	—Rigid Track Frame						
T 7 BD	"	—	"	—	"	—Front Power Take-Off				
T 7 BE	"	—	"	—	"	—	"	—Light. or Starting (Delco-Remy)		
T 7 BF	"	—	"	—	"	—	"	—	"	(Delco-Remy Heavy Duty)
T 7 BG	"	—	"	—	"	—	"	—Lighting (Robert Bosch)		
T 7 BH	"	—	"	—Front Power Take-Off—Light. or Starting (Delco-Remy Heavy Duty)						
T 7 BHA	"	—	"	—	"	—	"	(Delco-Remy)		
T 7 BHB	"	—	"	—	"	—Heavy Duty Drawbar				
T 7 BJ	"	—	"	—	"	—Cutaway Sprocket—Light. or Starting (Delco-Remy Heavy Duty)				
T 7 BJA	"	—	"	—	"	—	"	—Reverse Flow Fan—Light. or Starting (Delco-Remy Heavy Duty)		
T 7 BK	"	—	"	—	"	—Cutaway Sprocket				
T 7 BKA	"	—	"	—	"	—	"	—Reverse Flow Fan		
T 7 BKB	"	—	"	—	"	—	"	—Heavy Duty Drawbar		
T 7 BKC	"	—	"	—	"	—	"	—Light. or Starting (Delco-Remy)		
T 7 BL	"	—	"	—Light. or Starting (Delco-Remy Heavy Duty)						
T 7 BLA	"	—	"	—	"	(Delco-Remy)				
T 7 BM	"	—	"	—Cutaway Sprocket—Light. or Starting (Delco-Remy Heavy Duty)						
T 7 BMA	"	—	"	—Cutaway Sprocket						
T 7 BMB	"	—	"	—	"	—Light. or Starting (Delco-Remy)				

SUFFIX LETTER CODE

T 7 BN Wide Tread—Rigid Track Frame
T 7 BP " — " —Front Power Take-Off
T 7 BR " — " — " —Light. or Starting (Delco-Remy)
T 7 BS " — " — " — " (Delco-Remy Heavy Duty)
T 7 BT " — " — " —Lighting (Robert Bosch)
T 7 BU " — " —Extended Track Frame—Heavy Front Idler—Light. or Starting (Delco-Remy)
T 7 BV " — " — " — " — " (Delco-Remy Heavy Duty)
T 7 BW " — " —Heavy Front Idler—Light. or Starting (Delco-Remy Heavy Duty)
T 7 BX " — " —Extended Track Frame

T 7 CA Wide Tread—Front Power Take-Off
T 7 CB " — " —Light. or Starting (Delco-Remy)
T 7 CC " — " — " (Delco-Remy Heavy Duty)
T 7 CD " — " —Lighting (Robert Bosch)
T 7 CE " — " —Cutaway Sprocket—Light. or Starting (Delco-Remy Heavy Duty)
T 7 CEA " — " — " — " (Delco-Remy)
T 7 CF " — " —Heavy Duty Track Roller Shield
T 7 CG " — " —Reverse Flow Fan
T 7 CL " —Lighting or Starting (Delco-Remy)
T 7 CM " — " (Delco-Remy Heavy Duty)
T 7 CMA " — " " " —Reverse Flow Fan
T 7 CN " —Lighting (Robert Bosch)
T 7 CP " —Cutaway Sprocket—Light. or Starting (Delco-Remy Heavy Duty)
T 7 CR " — " — " (Delco-Remy)
T 7 CS " —Front Power Take-Off—Cutaway Sprocket

T 7 DA Wide Tread—Cutaway Sprocket

T 7 EA Wide Tread—Reverse Flow Fan

T 7 FA Wide Tread—Heavy Front Idler—Front Power Take-Off—Reverse Flow Fan—Light. or Starting (Delco-Remy)
T 7 FB " — " — " — " — " (Delco-Remy Heavy Duty)

T 7 GA Wide Tread—Extended Track Frame—Lighting (Robert Bosch)

T 7 HA Wide Tread—Heavy Duty Drawbar—Light. or Starting (Delco-Remy Heavy Duty)

T 8 8,000 ft. altitude

T 9 High Speed Gear
T 9 A " —Heavy Duty Track Roller Shield
T 9 B " — " —Rigid Track Frame
T 9 C " — " — " —Front Power Take-Off
T 9 D " — " — " — " —Light. or Starting (Delco-Remy)
T 9 E " — " — " — " — " (Delco-Remy Heavy Duty)
T 9 F " — " — " — " —Lighting (Robert Bosch)
T 9 G " —Rigid Track Frame
T 9 H " — " —Front Power Take-Off
T 9 J " — " — " —Light. or Starting (Delco-Remy)
T 9 K " — " — " — " (Delco-Remy Heavy Duty)
T 9 L " — " — " —Lighting (Robert Bosch)
T 9 M " —Front Power Take-Off
T 9 N " — " —Light. or Starting (Delco-Remy)
T 9 P " — " — " (Delco-Remy Heavy Duty)
T 9 R " — " —Lighting (Robert Bosch)
T 9 S " —Light. or Starting (Delco-Remy)
T 9 T " — " (Delco-Remy Heavy Duty)
T 9 U " —Lighting (Robert Bosch)
T 9 V " —Cutaway Sprocket—Light. or Starting (Delco-Remy Heavy Duty)
T 9 VA " — " — " (Delco-Remy)
T 9 W " — " —Front Power Take-Off—Light. or Starting (Delco-Remy Heavy Duty)
T 9 X " —Heavy Duty Track Roller Shield—Front Power Take-Off—Light. or Starting (Delco-Remy Heavy Duty)
T 9 Y " — " —Light. or Starting (Delco-Remy Heavy Duty)

T 10	10,000 ft. altitude
T 11	Heavy Duty Track Roller Shield
T 11 A	" —Rigid Track Frame
T 11 B	" — " —Front Power Take-Off
T 11 C	" — " — " —Light. or Starting (Delco-Remy)
T 11 D	" — " — " — " (Delco-Remy Heavy Duty)
T 11 E	" — " — " —Lighting (Robert Bosch)
T 11 F	" —Front Power Take-Off—Light. or Starting (Delco-Remy Heavy Duty)
T 11 G	" —Light. or Starting (Delco-Remy Heavy Duty)
T 11 H	" —Front Power Take-Off—Cutaway Sprocket
T 11 J	" — " —Reverse Flow Fan—Light. or Starting (Delco-Remy Heavy Duty)
T 11 K	" —Lighting (Robert Bosch)
T 11 L	" —Front Power Take-Off—Light. or Starting (Delco-Remy)
T 11 M	" —Front Power Take-Off
T 11 N	" — " —Cutaway Sprocket—Light. or Starting (Delco-Remy Heavy Duty)
T 11 P	" — " — " — " (Delco-Remy)
T 11 R	" —Light. or Starting (Delco-Remy)
T 11 S	" —Cutaway Sprocket—Light. or Starting (Delco-Remy Heavy Duty)
T 11 T	" — " —Light. or Starting (Delo-Remy)
T 11 U	" —Cutaway Sprocket
T 12	Rigid Track Frame
T 12 A	" —Front Power Take-Off
T 12 B	" — " —Light. or Starting (Delco-Remy)
T 12 C	" — " — " (Delco-Remy Heavy Duty)
T 12 D	" — " —Lighting (Robert Bosch)
T 13	Front Power Take-Off
T 13 A	" —Light. or Starting (Delco-Remy)
T 13 B	" — " (Delco-Remy Heavy Duty)
T 13 C	" —Lighting (Robert Bosch)
T 13 D	" —Cutaway Sprocket—Light. or Starting (Delco-Remy)
T 13 E	" —Cutaway Sprocket
T 13 F	" — " —Light. or Starting (Delco-Remy Heavy Duty)
T 13 G	" —Reverse Flow Fan
T 14	Lighting or Starting (Delco-Remy)
T 14 A	" (Delco-Remy Heavy Duty)
T 14 B	Lighting (Robert Bosch)
T 14 C	Lighting or Starting (Delco-Remy)—Cutaway Sprocket
T 14 D	" (Delco-Remy Heavy Duty)—Cutaway Sprocket
T 15	Engines with undersize crankshaft
T 16	Cutaway Sprocket

PART NUMBER	PAGE
C	
1100 C	117
1265 C	112
D	
602 D	155
2369 DX	59
2370 DAX	21,59
3272 DA	171
3281 DA	231
3401 DA	171
4253 D	16,53,189
4254 DA	16,53
4406 DB	155
4452 D	205
4457 D	142
4596 D	141,203,205
4819 D	10,45
5051 DX	68
5318 DA	171
5416 D	171
5447 D	171
5961 DX	190
5977 D	190
6288 D	25
6289 D	24
6297 D	124
6376 DAX	149
6392 DX	10,49
6430 DAX	58
6458 D	160
6470 D	151
6477 D	142
6478 D	144
6479 DBX	144
6480 DC	142
6480 DCX	142
6432 DAY	37,74,237
6483 DY	36,73,237
6492 DX	127
6514 DA	29
6518 DAX	20,58
6526 DAX	16,50
6533 DA	11,45
6534 DAX	11,47
6565 DBX	189
6572 DA	220
6586 D	20,59
6587 D	58
6601 DD	162
6601 DDX	162
6602 DD	162
6602 DDX	162
6605 DA	162
6608 DR	42
6612 D	174
6623 DAX	49,237
6624 DA	125
6625 DA	125
6626 DX	125
6627 DA	125
6628 D	125
6633 DBX	26
6634 DD	25
6637 D	162
6649 D	25,60
6652 DB	16,53
6676 DA	26
6679 DX	201
6682 D	201
6745 D	220
6746 D	231
6746 DX	220
6783 DX	38,75,237
6843 D	199
6846 DX	202
6848 D	203
6935 D	16,53
6991 DB	23
6995 D	63
8000 D	77
8000 DA	77
8000 DAX	77
8019 DA	23
8023 DX	20,59
8080 DAR	52
8082 DX	34,71
8088 DX	55
8089 DAX	18,55
8101 DFX	43,238
8101 DFY	43,238
8104 D	41
8110 D	41
8111 D	41
8112 D	41
8113 DAX	32,56
8121 DX	48
8124 DFX	46
8124 DFZ	46
8124 DGX	46,239
8124 DGZ	46
8146 DA	77,81
8169 DX	62
8182 DX	147
8183 DX	147
8210 D	18,55
8221 D	83
8222 D	85
8222 DA	85
8222 DAX	85,239
8232 D	157
8235 D	151
8236 D	151
8237 DA	151
8238 DB	151
8239 DX	150
8244 D	181
8247 DA	127
8286 DR	15
8287 DR	14
8290 DAX	23,239
8290 DAY	23,240
8291 DX	17
8291 DY	17,240
8292 D	8
8293 DR	8
8294 D	8
8303 DX	12,240
8305 D	25
8306 DAX	25
8312 D	19
8313 DAX	19
8318 D	11
8318 DB	11
8318 DC	11
8320 DBX	8,240
8320 DBY	8,240
8321 DAX	23,240
8322 DR	8
8323 DCX	12,241
8323 DCZB	12,241
8355 D	45
8363 DBX	241
8390 DB	202
8390 DBX	202
8391 DX	199,201
8392 DAX	199,201
8393 DA	203
8398 DX	50
8403 DX	161
8404 D	163
8405 D	164
8415 DB	166
8416 DB	166
8417 DB	167
8418 DB	167
8419 DX	166
8424 DX	60
8427 DX	131
8429 DAR	52
8438 DAX	141
8439 DAX	155
8440 D	154
8441 D	154
8442 DAX	127
8444 D	153
8450 D	159

PART NUMBER	PAGE
8451 DA	160
8455 D	145
8456 D	145
8457 D	145
8458 DA	147
8461 DAX	160
8465 D	143
8471 DA	172
8479 DAX	69
8479 DBX	69,242
8482 D	134
8484 DAX	131
8485 DAX	131
8487 DAX	163
8488 DAX	163
8489 DBX	122
8490 DBX	123
8491 DAX	122
8492 DAX	123
8493 D	174
8495 DBX	63,242
8505 D	189
8507 D	159
8508 DX	159
8509 D	159
8510 DX	157
8511 DAX	159
8512 DAX	157
8513 DA	158
8514 DBX	121,242
8516 D	159
8517 DAX	25
8525 DB	60
8527 DAX	187
8552 D	53
8553 D	12,46
8554 D	13,49
8557 DX	28
8560 D	125
8566 DA	159
8573 DX	65
8592 D	220
8617 DAX	61
8625 D	154
8658 DA	125
8699 DBX	53
8714 D	192
8715 D	192
8722 DA	134
8731 D	29
8732 D	132
8744 DR	42
8745 D	171
8775 D	159
8779 D	142
8807 D	203,206
8808 DX	205
8809 DA	205
8810 DX	204
8811 DX	205
8812 D	203
8814 DX	203,205
8815 D	209
8816 D	209
8817 D	209
8860 D	193
8917 DX	208,242
8944 DX	147,242
8945 DX	147,242
8947 DX	141
8959 D	13,48
8961 D	198
8970 DX	117
8970 DAXA	117,243
8970 DAY	117,243
8971 DA	106
8972 D	106
8973 DX	115
8974 DXA	103,243
8976 D	118
8977 DM	16,50
9000 DR	15
9001 DR	15
9111 DR	15
9118 DX	83
9168 D	231
9172 D	231
9174 D	231
9195 DAX	8,243
9195 DAY	8,243
9230 D	231
9245 DA	171
9257 DX	83
9258 D	13,48
9267 D	11,45
9268 DX	11,47
9277 DX	25
9310 D	85
9311 D	83
9314 DX	167
9329 DM	125
9355 D	58
9356 D	19
9358 DR	52
9361 D	85
9379 DR	231
9390 DX	68
9411 DX	36,73,244
9411 DY	37,74,244
9412 D	106
9446 DAX	60
9447 DX	60
9453 D	135
9454 D	135
9472 D	85
9533 D	181
9607 D	77,81
9630 DX	162
9631 DX	163
9634 D	131
9637 D	141
9639 DAX	147,244
9640 DAX	148,244
9643 D	203,205
9644 D	131
9645 DA	131
9652 DA	127
9690 DMX	50
9694 D	127
9708 D	103
9709 DM	85
9722 DR	15
9723 DR	15
9725 DMX	16,50
9748 DR	15
10064 D	207
10319 D	16,53
10958 D	25,26
10961 D	17,55
11373 D	141
11358 DA	181
11917 DC	134
12215 D	23
13021 D	17,55
13054 D	127
13055 D	16,51
13085 D	25
13090 D	26,115
13115 D	141
13176 D	206
13191 D	139
13193 D	139
13194 D	[illegible]
13231 D	11,12,45,46
13722 D	141,203,205
13727 D	85
13728 D	85
13729 D	85
13806 D	10,12,23,46
13839 D	32,56
13841 D	32,56
13842 D	32,56
13897 D	47
14186 DA	10,20[illegible]8 201
14898 DX	155

PART NUMBER	PAGE
15644 D	166
15668 D	131
16025 D	13,49
16045 D	41
16067 D	8,41
16077 D	124,125
16445 D	138
17063 D	109
17564 D	139
17565 DA	139
17700 D	141
17767 D	142,144,202
18377 D	28,69
18558 D	161
18573 DA	167
18585 DA	121,141
18653 D	147
18767 D	53,189
18868 D	49
18942 D	172
19289 D	181
19291 D	181
19292 D	181
19306 D	61
19323 D	181
19324 D	181
19325 D	181
19326 D	181
19327 D	181
19328 D	181
19329 D	181,244
19962 D	63
19963 D	23
20000 D	112
20156 D	181
20157 D	181
20289 D	20,59
20290 D	20,59
20293 D	20,59
20296 D	20,59
20299 D	20,59
20300 D	20,59
20301 D	21,59
20303 D	20,59
20306 DX	20,59
20308 D	20,59,199,201, 203,204,206
20345 D	83
20585 D	21,59
20586 D	21,59,60,61
20841 D	154
20887 DA	141
20899 DAX	155
20901 D	155
20903 D	220
20909 D	155
21249 D	199
21259 D	20,59
21314 DX	37,73
21341 D	37,73
21342 D	37,73
21350 DXA	36,73
21362 D	26,207
21372 D	38,75
21388 DBX	36,73
21393 D	37,74
21394 D	37,74
21409 DB	37,74,214
21438 DBX	181
21526 D	135
21560 D	143
21839 D	20,59
22080 D	226,236
22383 D	124,125
22507 D	81
22510 D	85,138
22828 D	34,71
22891 D	47,88
22977 DA	157,159
23086 D	207
23125 D	138
23132 D	63,192
23141 D	8
23142 D	8
23516 D	31
23518 D	31
23520 D	31
23521 D	31
23522 D	31
23523 D	31
23524 D	31
23525 D	31
23526 D	31
23527 D	31
23528 D	31
23530 D	31
23537 D	31
23539 D	31
23541 D	31
23545 D	31
23603 D	231
23681 D	127
23977 DA	137
23995 DA	137
24017 D	20,59
24473 DA	34,71
24517 D	10
24523 D	34,71
24524 D	31
24569 D	13,49
24603 D	38,75
24685 D	28
24687 DA	28
24689 D	28
24693 D	29
24703 D	68
24703 DA	28
24772 D	25
24790 D	107
24805 D	27,83
24916 D	41
24917 D	41

NUMERICAL INDEX

PART NUMBER	PAGE
25063 DA	13,49
25076 D	10,47
25086 DA	11,45
25093 DA	11,45
25115 D	25,61
25176 D	117
25388 DA	158
25388 DAX	158
25388 DAY	158
25484 D	28
25589 D	31
25590 D	31
25948 D	23,68,69
26039 DA	128
26080 DB	231
26095 D	31
26097 D	31
26143 D	125
26242 D	137
26249 D	208
26250 D	208
26251 D	208
26256 D	208
26257 D	208
26259 D	208
26261 D	208
26407 D	28,69
27044 D	202,205
27046 D	202,205
27048 D	202,205
27159 D	209
27159 DB	209,244
27311 D	38,75
27383 D	221
27385 D	211,213,215, 217,219,221
27386 D	213,215,219, 226
27387 D	213,215,219, 221
27404 D	226,231
27445 DB	29,67
27452 D	67
27595 D	226,236
27618 D	33,71,221, 226,231
27843 D	125
28073 D	26
28113 D	70
28173 DA	50
28428 D	132,213,215, 219,221,226, 229,231
28589 D	33,70
28591 D	33
28781 D	32,56
28797 D	45
28809 D	85
28824 D	31
28825 D	31
28827 D	31
28899 DB	138
28950 D	10,45,46,61
29070 D	10
29325 D	211,213,215, 217,219,221.
29538 D	138
29547 D	141
29565 D	46
29710 D	13
29780 D	123
29802 DB	171
29836 D	65
29898 D	78,132
29899 D	31,91,137, 138,139
29900 D	31
29900 DX	31
29901 D	132
29901 DX	132
29902 DX	28,69
30083 D	33,70
30402 D	78
30402 DX	78
30424 D	221
30747 DX	229,231
30752 D	231
31115 D	171
31121 D	77,81
31180 D	208
31231 D	128
31238 D	128
31240 D	128
31242 DA	128
31279 D	18
31281 D	18
31283 D	18
31284 D	18
31285 D	18
31290 D	18
31336 D	28
31378 D	18
31636 D	67
31729 D	10,47
31760 D	31
31790 DA	193
32032 DXA	36,73
32316 D	17,55
32319 D	17,55
32445 D	43
32454 D	158
32483 DA	8,42
32493 D	77,80
32572 DAX	68
32574 D	68
32575 D	68
32576 DX	69
32577 D	68
32578 D	
32581 DXA	
32582 D	68
32586 D	68
32587 D	68
32588 D	68
32604 D	68
32606 DA	67
32615 D	28
32888 D	10,45
32896 D	68
32941 D	181
33681 D	16,51,16
33814 D	19,58
33817 DB	14,50
35032 D	
35033 D	19
35089 DA	161

PART NUMBER	PAGE
35252 D	91
35252 DX	91
35606 D-54	28
35691 D	69,245
36092 D	64
36151 D	26
36273 D	235
36350 D	31
36351 D	31
36796 DA	16,53
36947 D	184
36970 D	171
36985 D	34
37063 D	236
37064 D	236
37072 D	236
37075 D	236
37077 D	236
37148 D	77,80
37150 D	77,81
37152 D	77,81,245
37165 D	8,24,78,81, 107,137,138
37290 D	162,164,167, 185
37291 D	33,36,71,73
37323 D	8,24,78,85, 106,137,138
37323 D	8,24.78,85, 106,137
37574 D	208
37599 D	208
37632 D	19,58
37633 D	19
37634 D	19,58
37822 D	171
37824 D	171
37976 D	221
38026 DM	8,42,79, 81,138
38026 DMX	8,42,79
38087 D	226
38433 D	231
38609 DA	36,73
38767 D	234
38815 D	211,217,221
39422 D	47
39423 D	47
39651 D	182
39652 D	182
39653 D	182
39654 D	182
39655 D	182
39656 DX	182
39659 D	182,185
39661 D	182
39662 D	182
39663 D	182
39665 D	182
39677 D	85
39779 D	221
39800 D	182,245
39868 D	182
39870 D	182
39875 D	182
40208 D	91
40211 D	91
40216 D	88
40217 D	90
40244 D	91
40255 D	88
40298 D	90
40329 DA	91,97,101, 117
40385 D	93
40386 D	93
40388 D	93
40390 D	93
40395 D	93
40397 D	93
40399 DA	88
40401 D	88
40433 D	34,71
40465 DX	141
40466 DX	141
40628 D	184
40631 D	184
40634 D	185
40635 D	185
40636 D	184
40638 D	185
40640 D	184
40641 D	184
40642 D	184
40644 D	184
40646 D	184
40647 D	184
40648 D	184
40649 D	184
40656 D	184
40657 D	184
40661 D	184
40693 D	184
40700 D	184
40703 D	184
40711 D	184
40712 D	184
40713 D	184
40725 D	184
40728 DA	184
40974 DA	174
41431 D	161
41470 D	157
41508 D	155
41509 D	153
41519 D	154
41597 D	127,131,147, 203
41600 D	121
41827 D	221
41842 D	174,198
41934 DB	132
41958 DA	131
42175 D	147
42215 D	64
42221 D	70
42239 D	159
42297 D	121
42298 DB	150
42383 D	211,213,215, 217,219,221
42385 D	137
42387 D	137
42406 DX	137
42495 D	137
42496 DX	141
42605 D	125
42733 D	45
42739 DA	43,63
42746 D	43
42765 D	77
42765 DA	77,81
42765 DAX	77
42766 D	77,81
42767 D	77,81
42772 D	65

PART NUMBER	PAGE
42833 D	221
42877 D	190
42879 D	190
42911 DB	132
42915 D	221,232
42916 D	221,232
42917 D	213,215,219, 221,229,232
42918 D	221
42921 D	226,235
42922 DX	221,234
42923 D	219,227
42924 D	219,227
42981 DA	61
43002 D	77,81
43035 D	219,227
43036 D	234
43037 D	234
43038 D	234
43039 D	234
43040 D	234
43113 D	47
43189 D	93
43192 DA	77,81
43207 D	128
43211 D	128
43248 D	128,245
43712 DB	169
43832 D	16,50
43891 DA	124
43969 D	144
43983 D	124
43984 D	124
45001 D	34,71
45003 D	34,71
45110 D	28,67
45120 D	121
45132 D	143
45148 D	28,67
45149 D	29,67
45248 D	132
45285 DA	32,56
45286 D	32,56
45293 D	173
45357 D	142
45361 D	142
45391 D	60
45435 D	144
45437 D	127
45442 D	206
45532 DA	203,205
45533 DA	205
45557 D	203
45558 DA	201,202,203
45653 D	26
45655 DA	25
45656 D	25
45667 D	26
45685 D	26
45696 D	25
45774 D	26
45775 D	26,106
45797 D	166
45813 D	133
45822 D	133
45956 D	10
45964 D	14
45982 DX	20,59
45984 D	19,58
45985 D	19,58
45986 D	19,58
45992 D	124
45993 D	20,59
46022 DA	154
46023 D	155
46024 D	155
46025 D	155
46027 D	155
46028 D	153
46029 D	153
46038 D	149
46040 D	149
46053 D	18,55
46059 D	29,67
46102 D	23
46129 D	12,49
46135 D	11
46136 D	11,47
46137 D	11,46
46157 D	18,55
46184 D	29,67
46185 D	28
46190 DC	181
46199 D	43
46200 D	43
46202 D	23
46208 D	42
46209 D	42
46210 D	42
46211 D	42
46221 DAX	7,41
46222 DAX	7,41
46223 DAX	7,41
46224 DAX	7,41
46225 DA	8,41
46246 D	11,47
46250 D	46,78,81
46251 D	12,48
46275 D	154
46304 D	121
46308 DBX	137,245
46332 D	121
46582 D	78
46583 D	77
46584 DX	78,81
46589 D	85
46591 DA	85
46595 DA	17,55
46606 DX	32,56
46696 DX	12,47
46700 D	13,43
46744 D	158
46746 D	157
46751 DA	158
46785 D	38,75
46794 DA	159
46795 D	159
46799 DA	160
46800 D	160
46809 D	121
46810 D	157
46821 D	157
46823 D	157
46825 DA	151
46826 D	151
46831 D	151
46839 DB	171
46849 D	145
46851 D	
46857 D	
46859 D	143
46887 D	143
46888 D	143
46904 DR	142
46905 DX	142
46912 D	142
46913 D	142
46916 D	144
46918 D	142
46923 D	14,50
47244 D	189
47294 D	38,75
47309 D	195
47310 DX	195
47334 D	161
47388 DA	29
47390 D	29
47392 D	27
47394 D	
47395 D	
47396 DX45	28
47398 DX	28

PART NUMBER	PAGE
7401 D	29
7402 D	28
7403 D	68
7404 DA	28
7405 DXA	28
7406 DAX	28
7407 D30	29
7407 D32	29
7408 D	36,73
7409 D	37,74
47413 DX	36,73
47413 DY	36,73
47417 DX	36,73
47424 D	36,73
47425 DX	37,74
47425 DY	37,74,245
47427 D	37,74
47428 D	37,74
47431 DB	36,73,245
47432 D	37,74
47433 DX	37,74,246
47438 DA	37,74
47439 DAX	37,73,246
47442 D	37,73
47449 DAY	36,73,246
47452 D	36,73
47453 D	36,73
47454 D	37,73
47461 D	38,75
47462 D	38,75
47464 D	38,75
47465 D	38,75
47468 D	38,75
47470 D	38,75
47473 D	38,75
47474 D	38,75
47475 DA	38,75
47490 D	189
47496 DB	51
47507 DA	14
47530 D	195
47546 D	37,74
47558 D	161
47585 DAX	141
47589 D	127
47591 D	127
47593 D	127
47594 DA	174
47595 D	174
47596 D	174
47598 DAXA	174
47599 DAXA	174
47602 D	174
47603 D	174
47604 D	174
47605 D	174
47607 D	174
47608 D	174
47609 D	174
47610 D	174
47619 D	150
47621 D	147
47628 D	16,50
47629 D	16,51
47639 DA	51
47640 DR	15,52
47643 DA	14,51
47696 D	10,45
47697 DB	10,45
47698 D	11,45
47726 D	150
47727 D	149
47728 D	150
47771 D	175
47772 D	175
47773 D	175
47775 D	175
47776 D	175
47778 D	173
47779 D	173
47780 D	173
47822 D	38,75
47823 D	141,203,205
47840 D	11,47
47861 D	222
47871 DA	217,219,222
47880 D	211,213,215, 222
47885 D	211,213,215, 222
47889 D	234
47890 DX	222,234
47891 D	234
47924 D	213,215,227, 229,232
47925 D	213,215,227, 229,232
47926 D	213,215,227, 229,232
47933 DX	45
47953 D	14,51
47955 D	20,58
47958 DXA	152
47959 DXA	152
47961 DA	153
47962 D	152
47979 D	123
47981 D	45
47984 D	10,48
47990 D	123
47991 D	123
48035 D	173
48038 DA	162
48040 D	167
48042 D	19,58
48044 D	121
48045 D	155
48047 D	153
48051 D	43
43053 D	42
43054 D	42
48055 D	8,42
48056 DA	8,42
48057 D	8,41
48058 D	42
48061 D	41
48072 D	121
48073 D	121
48074 D	123
48075 D	121
48117 D	13,49
48118 D	13,49
48138 D	48
48139 DA	49
48142 D	46
48143 D	46
48150 DC	124,246
48151 DA	124,246
48157 DX	125
48158 D	124
48159 D	125
48160 D	124
48164 D	125
48165 DA	124
48168 D	125
48169 D	125
48170 D	125
48227 D	26
48229 D	161
48230 DA	150
48232 D	138
48233 D	138
48245 DX	25
48250 D	26
48250 DX	25
48251 D	26
48253 DA	26
48254 D	26
48255 D	26
48256 DA	26
48256 DAXA	26,247
48262 D	12,47
48296 D	12,47
48311 D	62
48339 D	37,74
48340 DA	38,75
48341 D	37,74
48342 DA	38,74
48343 D	73
48354 D	61
48355 D	61
48356 D	25,60
48353 D	25,60
48359 D	60
48384 D	13,49
48385 D	13,49
48472 D	36,73
48489 D	25
48492 D	25
48493 D	25
48496 DA	24
48501 D	24
48512 D	199,201,205,
48514 D	199,201,205
48521 D	201
48522 D	201
48523 D	201
48524 D	201
48526 D	201
48671 D	195,247
48695 D	32
48739 DX	191
48764 D	190

PART NUMBER	PAGE
48842 DAX	25
48848 D	209,247
48906 D	131,203,206
49045 DA	23
49076 D	125
49090 DXR	37,74,247
49091 DX	75
49091 DY	75,247
49091 DZ	75,248
49092 D	75
49093 DX	38,75
49094 D	72
49105 D	203,205
49107 D	26
49108 D	26
49125 D	36,73
49178 DA	201,202,203
49185 D	59,248
49223 D	27
49242 D	211,213,215, 217,219,222
49359 D	33
49362 D	171
49387 D	13
49407 DAX	26
49416 DX	36,73,248
49417 D	36,73
49418 D	36,73
49419 D	36,73
49420 DX	36,73
49423 D	36,73
49424 D	36,73
49450 D	207
49451 D	207
49465 DB	171
49466 DB	171
49467 DB	171
49468 DB	171
49469 DB	171
49470 DB	171
49471 DB	171
49472 DB	171
49473 DB	171
49474 DB	171
49475 DB	171
49476 DB	171
49477 DB	171
49478 DB	171
49479 DB	171
49480 DB	171
49481 DB	171
49482 DB	171
49483 DB	171
49484 DB	171
49485 DB	171
49486 DB	171
49487 DB	171
49502 D	222,232
49528 D	26
49537 D	203
49538 D	203
49541 DA	203
49542 D	202
49543 D	202
49544 D	202
49545 D	203
49546 D	202
49547 DA	199,201
49548 D	199,201,205
49558 DA	201
49572 D	211,213,215, 217,219,222
49586 D	162
49587 D	123
49593 D	37,73
49682 DX	53
49791 D	36,73
49798 D70	28
49950 D	8,41
49952 D	10,47
50098 DA	151
50098 DAX	151
50099 D	151
50149 D	139
50234 D	222
50235 D	222
50248 D	25
50307 DB	70
50309 DA	70
50311 DB	171
50312 DB	171
50313 DB	171
50314 DB	171
50338 D	8
50359 D	18
50366 DX	24
50398 D	150
50410 DA	11,43,47
50411 D	45
50413 D	128
50417 D	132
50430 D	128
50431 D	128
50433 D	128
50500 DA	138
50500 DAX	138
50607 D	79
50607 DX	79
50677 D	43,62
50678 D	43
50682 D	65
50683 D	64
50683 DX	64
50705 D	63
50760 D	195,248
50763 DA	195
50765 DX	195
50767 D	195
50784 D	235
50790 D	20,59
50802 D	67
50803 D	67
50807 D	67
50814 D	68
50821 D	66
50826 D	46
50827 D	45
50917 D	192
50918 D	192
50943 DA	13,49
50949 D	13,49
50950 D	49
50951 D	46
50954 D	50
50955 D	50
50956 D	14,50
50975 D	12,48
50977 DAX	51
50978 DAX	51
51001 D	207
51002 D	207
51038 DX	55
51040 DA	55
51041 DA	55
51044 D	17,18,55
51046 D	18,55
51047 D	17,55
51066 DB	139
51066 DBX	139
51067 DX	61
51068 D	61
51101 DX	55
51145 DX	41
51166 D	41
51167 DAX	41
51169 D	41
51170 D	41
51171 DX	41
51172 D	41
51183 DA	[illegible]
51194 D	[illegible]
51195 D	43
51197 D	42

NUMERICAL INDEX

PART NUMBER	PAGE
201 DX	45
202 DX	45
203 DA	13,49
204 D	32,56
1205 D	32,56
225 DD	128
1227 D	127
1233 D	70,248
234 DA	71
1268 D	189
1269 D	189
1271 D	189
51305 DAR	49
51306 DAR	49
51307 DAR	49
51308 DAR	49
51308 DAR	13
51309 DAR	46
51310 D	46
51311 D	47
51312 D	11,47
51313 D	10,45
51316 D	10,45
51317 DXA	55
51318 D	55
51324 D	10,45
51325 D	12,47
51326 DX	48
51327 DX	48
51328 D	48
51329 D	45
51330 D	77
51331 DX	77
51332 DX	77
51333 DX	77
51334 DX	77
51336 DX	11,45
51337 DBX	78
51338 D	83
51339 D	83
51399 D	153
51434 D	79,85
51434 DX	79,85
51510 D	132
51511 D	183
51517 D	78
51517 DX	78
51518 DX	78
51519 DX	78
51521 D	128
51524 D	128,249
51525 DX	78
51526 DBX14	88
51527 D	83
51529 D	43
51530 DX	61
51532 D	60
51547 D	180
51550 DX	209,249
51551 DX	208,249
51602 D	217,219,222
51605 DX	61
51661 D	145
51666 D	36,73
51667 D	36,73
51668 D	63
51670 DX	63
51671 DX	63
51672 D	62
51673 D	63
51732 D	68,249
51735 D	68
51745 D	195
51773 DA	34,71
51774 D	207
51775 D	34,71
51790 D	10,46
51849 DX	138
51850 D	138
51852 D	139
51887 D	235
51888 D	235
51889 D	235
51891 D	235
51892 D	235
51893 D	235
51894 D	235
51895 D	236
51898 D	235
51915 DA	181
51933 D	138
51939 D	133,134
51940 D	134
51941 D	134
51942 DX	133
51952 D	193
51970 D	235
52007 DX	12
52020 D	43
52030 DX	213,215,219, 222
52033 D	124
52062 D	222
52123 D	185
52128 D	78
52130 DX	52,249
52130 DY	52
52131 D	52
52132 DX	52
52135 DX	52
52136 D	52
52137 DX	52
52138 DA	52
52142 D	52
52143 DA	52
52176 DC	60
52201 DX	178
52205 D	175
52207 D	157
52208 D	144
52209 D	157
52210 DAXA	158
52211 D	142
52212 D	142,143
52213 D	143
52214 D	143
52215 D	143
52216 D	142
52217 D	142
52218 D	142
52219 DA	143
52219 DB	143
52220 D	142
52221 D	143
52222 D	158
52225 D	157
52226 D	158
52226 DA	158
52226 DAX	158
52227 D	159
52229 D	158
52230 DA	158
52231 D	158
52237 DX	142
52239 D	151
52240 DA	151
52241 D	150
52242 DB	151,250
52243 DAX	150
52244 DX	150
52250 DX	134
52251 DX	133
52254 D	192
52255 DX	121
52256 D	121
52270 D	132
52272 D	131,222
52275 D	138
52276 D	181
52279 D	150
52291 D	160
52292 D	160
52294 D	172
52297 D	217,219,222
52318 DA	232
52319 DB	85,222
52390 D	176
52404 D	131
52405 D	131
52445 D	195
52463 DX	52
52514 D	63
52515 DA	63,250
52519 D	62
52520 D	62
52605 D	12,48
52606 D	12,47
52608 DA	14,51
52612 D	77,80
52613 D	77,81,250
52620 D	61
52621 DX	61
52623 D	61
52624 D	61
52626 D	60
52633 DA	143
52638 D	143
52640 D	61

PART NUMBER	PAGE
52745 D	109
52750 DAX	15,250
52750 DAY	16
52751 DA	15
52752 DA	15
52752 DAX	15
52754 D	14
52755 DA	23
52756 D	23
52757 DA	15
52757 DAX	15
52758 DX	12
52759 DX	18
52761 D	13
52762 DX	10
52764 D	23
52769 D	17
52770 D	18
52771 D	17
52772 DX	17
52773 DB	32,250
52774 DX	12
52776 DX	12
52778 D	8
52780 D	8
52783 DX	8
52784 DX	7
52786 D	7
52787 D	8
52788 DX	8
52789 D	10
52790 D	10
52791 DX	7
52793 DA	7
52794 D	33
52795 DD	8
52796 DAR	13
52797 DAR	13
52798 DX	12
52799 D	12
52800 D	12
52801 DXA	18
52806 DX	18
52808 D	18
52809 DBX	16
52810 DX	24
52811 DXA	26
52812 D	25
52813 D	24
52814 D	27
52815 D	27
52818 DX	16
52819 DX	16
52820 DX	16
52821 DX	16
52822 DX	10
52823 D	23,141
52824 D	8
52825 DA	8
52826 DBX	16
52855 D	139
52869 D	150
52969 D	229,232
53031 D	132
53063 D	26
53076 D	26
53079 D	68,250
53083 D	63
53136 D	65
53176 DA	35
53177 DX	223
53187 D	184
53196 D	184
53197 D	185
53197 DA	185
53198 D	185
53199 D	185
53200 D	185
53201 D	185
53202 D	185
53203 D	185
53204 D	185
53205 D	185
53206 D	185
53207 D	184
53208 D	185
53209 D	185
53210 D	184
53211 D	185
53215 D	223
53216 DX	223
53216 DAX	223
53222 DA	163
53223 DA	163
53226 D	223
53227 D	223
53243 DA	168
53244 DA	168
53245 DA	169
53245 DAX	169
53246 DA	169
53246 DAX	169
53247 DA	169
53247 DAX	169
53248 D	169
53249 DA	169
53250 D	169
53251 D	201
53252 D	202
53253 D	202
53254 DA	201
53255 D	202
53256 D	202
53258 D	203
53352 DA	165
53353 DA	165
53354 DA	164
53355 DA	164
53358 DA	164,166
53359 D	164
53360 D	164,166
53361 D	164
53362 D	164,166
53363 DX	164
53364 DX	163
53365 DA	164,251
53366 DA	163,251
53367 D	164
53368 D	163
53369 DX	164,166
53370 D	164
53372 DX	164
53373 D	164,166
53389 D	151
53395 DA	166
53398 D	167
53399 D	166
53400 DX	166
53437 DC	43
53459 DA	66
53474 D	141
53477 DA	141
53478 DA	141
53479 DA	141
53480 DA	141
53481 DA	141
53482 DA	141
53486 D	141
53489 DXA	152
53490 D	154
53491 DX	121
53494 D	127
53495 D	153
53497 D	154
53503 D	154
53504 D	154
53506 D	154
53507 D	154
53508 DX	155
53514 D	154
53520 DA	152,251
53537 D	158
53538 D	160
53539 DAX	160
53544 D	145
53548 D	145
53549 D	145
53550 D	145
53551 DA	145
53552 D	145
53553 D	145
53559 D	121
53560 D	10,47
53563 D	77,81
53595 D	147
53596 D	147
53597 D	
53598 D	
53600 D	147
53605 D	147
53606 D	147
53627 D	160
53631 D	143
53632 DX	142
53633 DA	143
53634 D	144
53635 D	143
53636 D	143
53637 D	143
53638 D	143
53639 D	144
53640 D	144
53643 D	47
53655 D	172
53656 D	172
53657 DB	173
53658 DB	173
53659 DB	173
53660 DB	173
53670 D	207
53683 DA	142
53714 D	121
53715 D	121

PART NUMBER	PAGE
3716 D	144
3717 DA	141
3725 D	139
3730 D	177
3731 D	176
3732 D	176,223
3752 DA	179
3753 D	177
3754 DX	179
3755 DX	177
3756 D	179
3757 D	177
3759 D	177
3760 D	177
3766 DAX	180
3768 DAX	178
3768 DAXA	178
3769 DX	176
3769 DXA	176
53770 D	157
53815 D	189
53826 D	189
53837 DX	69
53840 D	67
53842 D	68,251
53843 D	68
53853 D	186,187
53854 DA	32,56
53872 D	12,49
53875 DA	67,222
53876 D	25
53877 D	25
53879 D	178
53880 DAX	137
53881 D	139
53882 D	139
53883 D	139
53884 D	139
53892 D	123
53893 D	123
53894 D	123
53895 D	123
53896 D	174,251
53897 D	174,251
53898 DA	174,174A
53902 D	131
53903 D	131
53904 D	131
53907 D	131
53921 D	175
53924 D	175
53925 D	175
53939 D	195
53940 D	195,252
53942 D	191
53943 D	191
53948 DAX	191
53949 D	191
53950 DA	191
53951 D	191
53952 D	191
53953 D	138,139
53954 D	138
53955 D	135
53962 DA	199
53963 DA	201
53964 DA	201
53966 DAX	199,201,252
53967 D	199,201
53968 D	199,201,205
53970 D	201
53971 DX	66
53978 DX	196
53979 DX	196
53980 D	196
53983 DX	64
53984 DX	64
53985 DX	65
53988 D	137
53989 D	137
53990 DAX	180
54002 D	159
54003 D	159
54004 D	159
54005 D	159
54006 D	157
54007 D	158,159
54008 D	158
54009 D	157
54010 D	159
54011 D	157
54012 D	158
54013 D	159
54016 D	159
54017 DA	159
54024 DC	131,252
54025 DC	131,252
54026 D	174
54027 D	174
54028 D	174
54029 D	174
54033 D	38
54034 D	38
54035 DX	38
54035 DY	38,253
54035 DZ	38,253
54037 D	190
54038 D	190
54067 DX	223
54069 D	223
54070 D	223
54081 D	194
54082 D	194
54085 D	60
54086 D	60
54087 D	179,253
54089 DX	197
54090 DX	197
54092 D	197
54095 DXA	177
54096 DXA	177
54097 DAX	178
54098 DA	179
54099 DX	179
54100 DX	179
54103 DX	149
54115 D	189
54116 DA	189
54124 D	61
54125 D	61
54127 D	192
54158 D	43
54207 D	132
54262 D	135
54273 D	135
54276 D	135
54278 D	95
54287 D	88
54289 D	89
54290 D	88
54291 D	89
54292 D	88
54293 D	88
54294 DAX	88
54295 D	88
54296 D	89
54297 D	89
54298 D	89
54299 D	90
54300 DBX	91,253
54300 DBY	91
54301 D	92
54303 D	90
54304 D	90
54305 D	89
54306 D	90
54307 DA	92
54308 DX	89,254
54313 DA	89
54314 DB	89
54315 D	89
54316 D	89
54317 D	88
54318 DAX	92
54320 D	88
54321 D	89
54322 D	89
54323 D	89
54324 D	89
54326 D	88
54329 D	88
54330 D	89
54331 D	89
54332 D	89
54333 DA	91
54334 D	89
54335 D	91
54336 D	88
54342 D	89
54343 D	89
54344 D	92
54345 D	91,254
54346 D	91
54347 D	91
54348 DBX	91
54349 D	91
54350 D	91
54351 D	91
54352 D	78
54357 D	92
54358 D	91
54359 D	92
54360 D	93
54361 DY	93
54364 DB	93
54365 D	93
54366 D	93
54367 D	93
54370 D	93
54371 D	93
54372 DB	88,254
54373 DB	88
54374 D	88
54376 D	95
54378 D	95
54379 D	95
54380 D	96
54382 D	97
54383 D	97
54384 D	90
54385 D	90
54386 D	92
54387 DB	91
54388 D	95,96,254
54389 D	96,254

NUMERICAL INDEX

PART NUMBER	PAGE
54393 D	96
54394 D	96
54395 D	97
54396 D	97
54397 D	97
54398 DX	95
54399 D	95
54400 D	95,255
54401 D	95
54402 DX	95
54404 D	95,255
54405 D	95
54406 D	95
54407 D	95
54408 DA	90,255
54409 DA	90
54410 DA	90
54411 D	90
54412 D	90
54413 D	90
54414 DB	90
54415 D	90
54416 D	90
54417 D	95
54418 D	95
54419 DA	96
54420 DA	96
54421 D	96
54422 DAX	96
54424 DX	96
54427 D	96
54428 D	96
54430 D	95
54431 D	96,256
54433 DB	96
54434 D	97,101
54435 D	97,101
54440 D	97
54441 D	97,101
54442 D	95,256
54451 DA	95
54454 DX	97
54457 DAX	97
54458 D	95
54459 DX	95
54460 D	90
54462 D	97,101
54463 D	95
54464 D	90
54468 DA	90
54469 D	97
54470 D	97
54471 D	97
54472 D	97
54473 D	97
54474 D	97
54475 DA	97
54475 DAX	97
54476 DA	97
54477 D	97
54478 DB	97
54481 D	91
54485 DX	29
54486 D	139
54488 DX	28
54489 D	27
54501 D	125
54502 D	125
54513 D	159
54514 D	160
54515 D	160
54518 D	96
54521 D	96
54522 D	97
54523 D	97
54524 D	97
54528 DA	95
54529 D	95
54530 D	90
54537 DA	71
54610 DA	151
54650 DA	56,256
54688 D	55,257
54692 DA	65
54694 D	65
54695 DA	65
54697 D	65
54708 D	65
54709 D	65
54710 D	65
54760 D	83
54761 D	83
54762 D	83
54763 D	83
54764 D	83
54765 D	83
54766 D	83
54769 D	223
54855 DAX	223
54856 DA	223
54857 DA	223,232
54858 D	223
54860 D	132,223
54861 DX	223
54861 DAX	223
54863 D	223
54864 DX	223
54866 DX	224
54867 D	224,232
54871 DA	211,215,224
54872 D	213,224
54947 D	18
54953 D	128
54956 D	128
54957 D	128
54964 D	63
54969 D	127,151
54970 D	26
54988 D	26
55015 D	36,73
55054 DX	42
55175 D	124
55228 DD	128,257
55229 DAXA	128
55230 DB	128,257
55231 DXA	128,257
55231 DYA	128
55232 DA	128
55233 DX	128
55267 D	128
55311 DX	174
55350 D	97
55351 D	21,258
55354 DA	61
55360 D	97
55361 D	88
55371 DAX	128
55377 D	147
55378 DAX	8
55379 D	8
55379 DX	8
55428 DA	96,100
55440 D	132
55442 D	162
55443 D	162
55462 D	217,219,2
55463 D	211,215,2
55464 D	211,213,2
55471 D	132
55479 D	185
55481 D	185
55482 D	185
55539 D	121
55627 D	10
55628 D	12
55660 DA	[illegible]
55691 DX	[illegible]
55693 DX	135
55745 D	150
55746 DAX	133
55748 D	135
55754 D	132
55772 D	96
55775 D	92
55776 D	92
55780 DA	71
55789 D	135
55855 D	36,73
55868 DX	134
55875 DC	124
55876 D	124
55911 DX	16,53,25
55954 D	149
55955 D	149
55957 DB	[illegible]
55959 D	[illegible]
55959 DA	149

PART NUMBER	PAGE
5959 DB	149
5959 DBX	149,258
5999 D	8,42
5999 DX	8,42
6064 D	192
6066 D	37,74,258
6069 DX	138
6070 DX	138
56107 D	63
56108 D	18,55
56113 D	89
56125 D	195
56126 D	195
56127 D	195
56128 D	195
56151 D	139
56174 D	61
56187 D	143
56188 D	142
56253 DA	15,258
56254 DB	15,187
56392 DX	178
56393 DX	178
56394 DX	177
56395 D	181
56396 D	139
56425 D	18
56475 D	153
56477 D	153
56479 D	153
56480 D	134
56481 D	134
56482 D	134
56504 D	224
56505 DA	224
56507 D	132
56508 D	133
56511 DAX	224
56517 D	132
56519 D	132
56527 D	63
56537 DX	67
56538 DX	67
56542 DX	67
56543 D	66
56543 DD	66
56576 D	92
56587 DX	61
56597 D	137
56597 DX	137
56613 D	145
56623 DB	52,259
56624 DB	52,187
56692 D	31
56693 DAX	31
56698 D	189
57013 D	226
57014 D	226
57015 D	226
57016 D	226
57017 D	226
57018 D	226
57022 D	220
57026 D	220
57027 D	220
57028 D	220
57029 D	220
57030 D	220
57031 D	220
57032 D	220
57039 D	226
57040 D	226
57041 D	21,59,259
57050 D	139
57050 DX	139
57052 D	181
57062 DX	213,215,219, 227,229,232,
57063 D	227,232
57143 D	213,215,219, 224,229,232
57146 D	211,213,215, 217,219,224
57164 D	226
57165 D	226
57166 DX	224
57167 D	96
57169 D	96,259
57176 D	171
57235 D	172,259
57239 D	172
57255 D	203
57275 D	213,215,219, 224
57276 D	211,213,215, 217,219,224
57277 D	213,215,219, 227,229,232
57279 D	213,224,260
57281 D	217,219,224
57283 DA	211,215,217, 219,224,260
57285 D	211,213,215, 217,219,224
57286 DX	211,215,217, 219,224
57293 D	65
57295 DX	137
57296 D	137
57304 D	186,187
57310 DY	213,215,224, 234
57311 D	260
57311 DY	219,224,234, 260
57312 D	234
57313 D	234
57314 D	38,75
57382 D	121
57383 D	121
57389 D	23
57503 DX	91
57505 DX	92
57506 D	92
57507 D	92
57508 D	92
57513 DA	171
57514 DA	171
57515 DA	171
57516 DA	171
57526 D	171
57527 D	171
57528 D	171
57529 D	171
57530 D	171
57531 D	171
57532 D	171
57533 D	171
57534 DA	171
57535 DA	160
57536 D	160
57542 D	171
57543 DX	137
57714 D	189
57728 DX	132
57729 DX	137
57736 D	8,42
57736 DX	8,42
57750 D	151
57755 D	38,75
57780 DA	34
57789 D	186,187
57792 DA	144
57793 D	144
57905 D	153
57913 D	16,50
57925 D	141
57926 DX	37,73,260
57956 D	29
57957 D	28
57977 D	29,261
57982 D	138
57982 DX	138
58002 DX	224
58064 DXA	204
58065 D	204
58068 D	205
58069 D	205
58070 D	205
58072 D	206
58073 DB	205
58080 D	204
58081 D	204
58084 D	206
58086 D	204
58087 D	206
58088 D	206
58089 DX	205
58090 DBX	205
58093 D	204
58095 DA	23
58099 DA	209

NUMERICAL INDEX

PART NUMBER	PAGE
58100 D	209
58101 D	209
58102 D	209
58103 D	209
58262 D	229,232
58294 DAX	165
58295 DAX	165
58296 DAX	165
58297 DAX	165
58298 D	165,261
58318 DA	131,261
58322 DX	180
58332 D	95
58333 D	95
58334 D	97
58335 D	95
58357 D	145
58358 D	143
58359 DMX	53,261
58453 D	193
58455 D	193
58511 D	7,41,48
58554 D	8,261
58835 D	67
58836 D	68
58837 D	68
58840 DX	68,261
58843 DX	66
58997 DA	18,55
59054 D	208
59055 D	208
59055 DX	208
59056 D	208
59097 D	69,262
59100 DA	66
59109 D	10
59116 D	132
59122 D	208
59123 D	208
59172 D	28
59173 D	28
59175 D	213,215,219, 224,229,232
59221 D	29,262
59241 D	69
59309 DX	148
59310 D	148
59311 D	148
59312 D	148
59313 D	148
59314 D	148
59315 D	148
59317 D	148
59318 D	148
59319 D	148
59320 D	187,262
59322 D	194
59326 D	194
59330 D	194
59337 D	208
59338 D	208
59421 D	194
59424 DA	34
59480 D	12,48
59481 D	13,48
59482 D	12,48
59484 D	13,48
59486 D	48
59487 D	13,48
59488 D	13,48
59489 D	13
59520 DX	198
59522 D	198
59523 D	198
59524 D	198
59525 D	198
59526 D	198
59527 D	198
59528 D	198
59531 D	49,262
59602 D	112
59603 D	112
59604 D	109
59605 DX	111
59606 D	112
59607 DAX	109
59608 D	110
59609 D	103,115
59610 D	117
59611 D	117
59612 D	111
59613 D	111
59614 DA	111
59615 DA	111
59616 D	111
59617 D	112
59618 D	111
59620 DX	109
59623 D	109
59624 D	109
59625 D	109
59626 D	109
59627 D	117
59631 D	109
59633 D	109
59634 D	109
59635 D	109
59636 D	117
59638 D	109
59640 D	109
59642 D	109
59645 D	109,112
59646 D	109,112
59647 D	111
59648 D	111
59649 D	111
59650 DA	109
59652 D	109
59653 DA	111,263
59657 D	111
59658 D	111
59659 D	111
59660 D	111
59661 DX	103
59663 D	109
59664 D	109
59665 D	109
59666 DX	111
59667 D	111
59670 D	112
59673 D	112
59674 D	109
59675 D	115
59676	81,115
59677 DX	109,263
59678 D	109
59679 D	109
59680 D	109
59681 D	109
59682 D	109
59683 D	109
59684 D	109
59685 D	109
59686 D	109
59686 DX	109,263
59687 D	109
59688 D	109,115
59689 D	109
59690 DAX	109
59691 DX	109
59693 DX	109
59694 D	106
59697 D	117
59698 D	117
59701 D	106
59702 D	106
59703 D	106
59704 D	117
59705 D	117
59706 D	117
59707 D	106
59708 D	91, [illegible]
59709 D	[illegible]
59710 D	115
59711 D	115
59712 D	115
59713 D	115
59713 DX	115
59714 D	115
59715 DA	115
59716 D	115
59717 D	115
59718 D	118
59719 DA	113
59720 D	118
59721 D	118
59722 D	118
59723 D	118
59724 DAX	118
59727 D	105,106
59729 D	102
59730 D	103
59731 D	103
59732 D	103
59733 DX	103
59733 DAYA	103,263
59733 DAX	103
59734 DA	117
59735 D	103
59736 D	10[illegible]
59737 D	1[illegible]
59738 D	10[illegible]
59739 D	103

PRINTED IN UNITED STATES OF AMERICA.

PART NUMBER	PAGE
)740 D	103
)741 D	103
)741 DA	103
)742 DX	103
)743 D	103
)744 D	103
)746 DB	102
)749 D	103
)750 D	103
)751 D	103
)752 DA	107
)754 D	107
)755 D	107
)756 D	107
)757 D	107
)758 D	107
)760 DA	117
)762 DX	117,263
)763 D	106
)767 D	105
)772 D	105
)781 D	105
)782 DX	105
)784 D	105
)784 DA	105
)793 D	105
)811 DM	16,50
)860 D	134
)880 D	65
)884 D	65
)887 D	65
)888 D	65
)889 D	65
59900 D	79
59900 DX	79
59902 DX	79
59905 D	79,92,187
59911 D	92
60022 DX14	88
60094 D	37,74
60095 D	150
60096 D	150
60128 D	31
60129 D	31
60130 D	21,59
60131 DA	78
60137 DX	79
60137 DAX	79
60137 DAY	79
60138 DX	79
60139 DX	79
60140 DX	79
60140 DAX	79
60140 DAY	79
60141 DX	61
60147 DA	15
60147 DB	15,187
60149 DB	15,187
60188 DAX	137,263
60193 DA	15,263
60194 DA	15,263
60200 D	65
60218 D	69,187,264
60221 DA	171
60330 D	28
60405 D	143
60476 DX	174A
60478 D	18,187
60486 DA	220
60487 D	220
60488 D	225
60489 D	227
60570 D	10
60571 DX	13
60573 D	164,166
60599 D	13,264
60732 D	92,187,265
60738 D	89
60740 D	96,100,265
60741 D	96
60742 DAX	92
60744 D	92
60744 DX	92
60745 D	97
60747 DX	79
60802 DB	15
60803 DA	15,266
60805 D	132
60870 D	83,266
60871 DA	83
60872 D	83
60876 D	83
60877 D	83
60878 DX	83,266
60910 DNS	211,213,225
60938 D	229,233
60947 D	29,187
61001 DAMX	135
61002 DAMX	42
61032 D	227
61111 D	93
61113 D	23
61115 D	128
61119 D	220
61122 D	220
61125 D	220
61127 D	128
61134 D	95
61206 D	79,187,266
61208 D	77,81
61209 D	77,81
61242 D	88
61248 D	138
61263 DX	229,233,234, 266
61264 D	178
61279 D	233
61281 D	233
61283 D	233
61316 D	10
61317 D	10
61338 D	66
61412 D	18
61506 D	8
61507 D	8
61508 DX	138
61509 DX	138
61594 DA	34
61757 D	203,206
61758 D	203,174
61759 D	203,206
61808 D	8,42
61812 D	229,233
61813 D	229,233
61831 D	229,233
61832 D	230
61833 D	230
61834 D	230
61835 D	230
61836 D	230
61837 D	230
61838 D	230
61839 D	230
61840 D	230
61941 D	230
61842 D	230
61843 D	230
61844 D	230
61845 D	230
61846 D	230
61847 D	230
61868 D	233
61875 D	229,233
61884 D	55,235
61908 D	88
61911 D	89
61917 D	91
61918 DX	91,266
61921 D	106
61923 DX	106
61924 D	106
61925 D	106
61926 DX	109
61926 DAY	109
61926 DAX	109
61927 D	103
61928 DX	115
61929 D	115
61931 D	115
61932 D	115
61933 DX	115
61935 D	115
61939 D	105,118
61940 D	117
61941 D	106
61942 D	117
61943 D	105
61946 D	105
61947 DXA	105
61951 D	105
61956 D	91

NUMERICAL INDEX

PART NUMBER	PAGE
61957 D	92
61958 D	91
61959 DX	90
61962 D	91
61963 D	90
61965 D	89
61969 D	85
61970 D	91
62028 D	15
62115 D	89
62118 D	89
62120 D	89
62121 D	89
62122 D	89
62123 D	85
62124 D	91
62125 D	93,267
62126 DY	93,267
62129 D	93
62158 D	185
62159 D	185
62159 DX	185,267
62190 D	99
62193 D	90,267
62194 D	92
62195 D	90
62196 D	90
62197 D	90
62198 D	90
62199 D	90
62200 D	100,267
62203 D	101
62204 D	100,101
62205 D	99,100,101
62206 D	100
62207 D	100
62208 D	100
62209 D	100
62210 D	100
62211 D	100
62213 D	99,268
62214 D	99
62215 D	101
62216 DX	101
62217 DX	99
62218 D	99
62219 D	99
62220 D	99
62221 D	99
62222 D	99
62223 D	99
62224 D	99
62225 DX	99
62227 D	99
62228 D	99
62229 DX	99
62233 D	100
62235 D	100
62236 D	101
62237 DX	99
62242 D	99
62243 DA	101
62245 D	101
62246 DX	99
62247 D	99
62248 D	100
62249 D	99
62250 DX	101
62253 D	101
62254 D	101
62255 DX	101
62259 D	101
62260 D	101
62261 D	101
62262 D	101
62263 DX	101
62264 D	101
62265 D	101
62267 D	100
62267 DX	100,268
62268 DX	100
62270 D	99
62271 D	99
62272 DX	100
62274 D	100
62275 D	100
62276 D	100
62277 DD	12
62278 DB	12
62302 D	229,233
62313 D	201
62314 D	201
62315 D	201
62440 D	134
62441 D	180
62442 D	180
62465 D	134
62466 D	134
62467 DX	8
62468 DX	180
62469 D	180
62486 DA	167
62488 D	167,268
62493 D	34,71
62622 D	90
62624 D	16
62625 D	100
62626 D	100
62627 D	100
62628 D	100
62633 D	100
62637 D	101
62638 D	101
62639 D	101
62640 D	101
62641 D	101
62642 D	101
62643 D	101
62644 D	101
62645 D	100
62648 D	100
62672 D	56
62779 D	141
62779 DX	141
62866 D	7,13,41,43
62930 D	80
62931 DX	80
62932 DX	80
62933 DX	80
62934 DX	80
62939 D	81
62941 D	81
62943 D	81,115
62945 DA	85,268
62946 DA	85
62948 DA	85
62949 D	85
62950 DX	81
62951 DX	81
62952 DAX	81
62953 DAX	81
63054 D	168
63055 D	168
63116 D	5
63121 D	1[illegible]
63121 DX	1[illegible]
63122 D	1[illegible]
63123 D	51
63123 DX	51
63127 DAX	13[illegible]
63128 DX	13[illegible]
63139 DMX	16,[illegible]
63225 D	19[illegible]
63226 D	19[illegible]
63227 D	19[illegible]
63255 D	143
63256 D	142
63257 D	144
63265 D	173
63282 D	13,4
63299 DX	53
63300 DX	53
63302 D	52
63303 D	52
63316 D	[illegible]1
63317 DA	141
63320 D	141
63322 DA	144
63324 D	220
63325 D	220
63326 D	220
63380 DX	16
63381 DX	16
63382 D	16
63383 D	16
63416 D	203
63427 DX	115
63436 D	85
63446 DX	61
63447 D	61
63629 DM	23
63690 D	143
63692 D	144
63732 D	[illegible]2
63737 D	[illegible]3
63788 D	233
63739 D	233,26

PART NUMBER	PAGE
34 D	56
35 D	32,56
37 D	165
89 D	165
90 D	165
96 DA	167
001 DA	163,269
002 DA	163,269
004 D	165
005 D	165
006 D	165
010 DA	165,269
043 D	118
044 D	106
049 D	139
049 DX	139
060 D	103,105
070 D	118
071 D	21,59,132
159 D	209
161 D	101
163 D	141,203,205
189 D	99
190 D	99
191 D	99
192 D	99
193 D	99,270
194 D	101
1339 D	81
4341 D	270
1361 D	16
1362 D	16
1363 D	16
4364 DX	16
4367 DX	16
4379 DX	52
4380 DX	52
4381 DX	53
4383 DX	52
4385 DX	16
4451 D	52,187
4452 D	52,270
4479 DXA	46,270
4487 D	157
64488 D	159
64490 DA	158,270
64491 D	157
64492 D	159
64504 D	23
64520 DA	85
64521 D	85
64536 D	28,68
64543 D	60
64544 D	60
64545 D	60
64574 D	61,270
64576 D	135
64577 D	135
64578 D	135
64638 D	134
64641 DX	138
64643 D	135
64675 D	111,271
64676 D	111
64679 D	109
64870 D	103
64871 D	103
64932 D	69
64956 D	206
64959 D	88
64960 D	88
64961 D	88
64967 D	139
64987 D30	29
64987 D32	29
64996 D	61
65027 D	115
65028 D	115
65029 D	115
65056 D	117
65064 D	181
65066 D	105
65069 D	85,222
65077 DAX	81
65078 DAX	81
65079 DX	81
65080 DX	81
65092 D	138
65111 D	168,271
65111 DX	168
65112 D	168,271
65122 D	168,271
65123 D	168,271
65210 D	103
65259 D	168,271
65260 D	168,271
65309 DI	102
65322 D	33
65323 D	33,70
65333 D	70
65343 D	33,70
65348 D	70
65349 D	33
65355 D	112
65359 D	33
65364 D	71
65374 D	92,187
65400 D	105
65534 D	225
65833 D	138
65868 D	123
65869 D	123
65870 D	105
66000 DAX	111
66002 D	103,112
66003 D	112
66004 D	112
66005 D	112
66007 D	112
66008 D	112
66010 D	111
66011 DA	111,272
66012 D	111
66108 DB	103,272
66109 D	115
66110 D	109
66241 DM	118
66272 D	25
66392 D	109
66776 D	194
67058 D	168,272
67118 D	134
67203 D	107
67233 D	107
67234 D	107
67235 D	107
67247 D	171
67248 D	171
67266 DX	28
67327 D	220
67328 D	220
67349 DX	141
67389 D	107
67393 D	107
67394 DA	107
67669 DX	209
67670 D	209,272
67671 DX	209
67672 DX	209
67674 D	220
67677 D	180
67688 D	130
67727 DA	163
67728 DA	163
67761 D	92
67796 D	100,272
67812 D	14
67870 D	89
67897 D	162
67898 D	162
67917 D	109
67918 D	103
67919 D	103
67922 D	103,138,273
67923 D	103
67924 D	103
67942 D	28,69
67944 D	78
67979 D	112
67980 D	112

PART NUMBER	PAGE
68012 D	112
68054 D	179
68090 D	85
68251 D	43
68252 D	18,55
68315 D	20,59,273
68380 D	107
68388 D	103
68389 D	103,273
68399 DM	85
68419 D	112
68613 DX	88
68625 D	100
68626 D	100
68630 D	153,273
68632 D	153,273
68636 D	153,273
68669 D	46
68782 D	15,273
68784 D	15,273
68786 D	15,274
68788 D	15,274
69212 D	148
69238 D	101,274
69332 D	93,187,274
69413 D	92
69449 D	115
69450 D	115,274
69464 D	141
69466 D	141
69467 D	144
69470 D	141
E	
E4 212	38,75
E4 216	36,73
E4 226	37,74
E4 294	75
E4A 294	38
E4 295	36,73
E4A 305	38,75
E4A 324	37,74
E4A 351	37,74
E4A 352	37,74
E4A 353	37,74
E4A 372	38,75
E4A 546	36,73
1326 E	181
G	
G 1110	23
G 1988	63
G 3754	16,53
G 3792	21,59
G 6579-1/3	32,56
G 9053	196
G 9210	209
12059 GT	174A,275
12060 GT	174A
12061 GT	174A
12062 GT	174A
12063 GT	174A
12064 GT	174A
12065 GT	174A
H	
H 156	181
H 4213	131
H 5476	185
3405 H	34
7472 H	229,233
7494 H	225,233,236
14226 H	201,202
14611 H	24
15033 H	131
15041 H	131,155
16603 H	236
16660 H	236
16661 H	236
16662 H	236
18575 H	204
21406 H	153
21407 H	127
21444 H	127,156
21491 H	79
22307 H	160
23276 H	159
25038 HA	65,66
26453 HX	225
27030 H	8,41
27166 H	128
28500 H	132,225, 227,233
28659 HA	31
29645 H	227,236
29939 H	225,236
29971 H	227,236
31194 H	14,51
37684 H	23
37762 H	70
38763 H	8,41
39624 HA	31
41229 H	235
41634 H	13,49,1
45027 H	132
47415 H	133,158
48716 H	63
49353 H	115
49425 H	234
50539 H	235
54909 H	13
64022 H	
66339 H	235
66340 H	235
67980 H	90,100,1
81448 H	125
84319 H	34,71
91406 HA	19,58,1
93082 H	23
98681 H	34
107047 H	
138321 H	127

PART NUMBER	PAGE
N	
N 32202	128
Q 3615	10,20,46,59, 122,147,172, 198,201
Q 3617	150
Q 3620	127
Q 3621	127
Q 3626	127,147,208
Q 3627	128
QA 3628	20,59
Q 3659	20,59
Q 3673	127,160
Q 3794	182
Q 5015	131
R	
250251 R91	275
250288 R11	122
250289 R11	122
251709 R91	171
251713 R91	165,275
251714 R91	167,275
251715 R91	179
251723 R91	220
S	
SA 3215	167
ST	
ST 200	143,144,206
ST 201	206
ST 204	205
ST 205 A	20,59,199, 201,203,204, 206
ST 206	201,202
ST 207	112
ST 210	206
ST 211	127
ST 214	204
ST 215	142,144,202
ST 220	144
ST 223	155
ST 228	157,159
T	
1197 T	155
1825 T	155
1924 T	34,71
2583 T	181
2584 T	181
2587 T	181
2588 T	181
4167 T	25,34,38, 71,75,109
6403 T	208
7235 T	13,49
8522 T	112
9982 T	85
9983 TB	28,69
TM	
5631 TM	138
5635 TM	138
7699 TM	109,112
V	
10430 V	127
10691 V	143,206
10693 V	206
10733 V	144
10789 V	213,215,219, 225
10815 V	219,225,229, 233
10815 VA	213,215,225
11251 V	236
11294 V	208
13439 V	11,45
21069 V	10,45
23007 V	43,63
41513 V	157,159
42687 V	159
43222 VA	21,59
43598 V	11,47
50941 V	109
51344 V	31,139
51346 VA	31
51348 VA	31
52662 VC	217,219,225
52662 VE	217,219,225
52745 V	89,91,99 100,101,185
53505 VC	211,215,225
53505 VE	211,215,225
Y	
1627 Y	213,215,219, 227,229,233
2853 Y	43,63