SERVICE MANUAL

FOR

HD7-HD10-HD14

DIESEL TRACTORS

FOURTH EDITION — REVISED

JANUARY 1 - 1949

PROPERTY OF

_____

_____

_____

ALLIS-CHALMERS

TRACTOR DIVISION · MILWAUKEE 1, U. S. A.

LITHO. IN U. S. A.

Foreword

The HD Series Service Manual, originally printed in October 1941, met with such favor that the entire edition was soon exhausted.

The manual was then completely rewritten, brought up-to-date, and expanded both in descriptive material and illustrations. The index was rearranged and made more complete making the book more useful both as a reference and a text book for instruction.

The third revised edition was first printed in 1942 and reprinted several times. This fourth revised edition has been only slightly changed and is entitled "Service Manual for HD7, HD10 and HD14 Tractors."

Judicious use of the material presented herein will result in longer, more effective and more economical tractor life.

INDEX

TOPIC	TOPIC NO.
A—Air Box Drain Tube Installation	85-B
Air Cleaner, Care of	13
Specification & Tolerances	67-GG
Air Heater:	
Adjustments	48-A-C
Diagnosis & Corrections	27
Operation	16-A
Ammeter Diagnosis & Corrections	26
Axle Bracket and Packing, Removal, "HD 14"	110-A
B—Baker Equipment	129
Balance Shaft	86
Specifications & Tolerances	67-P
Repairs	86
Battery and Generator, Care of	20
Bevel Gear and Pinion "HD 7"	
Adjustment	102-H
Installation	102-H
Packing	102-I
Removal	102-G
Seals (Non Adjustable)	102-J
Bevel Gear and Pinion "HD 10":	
Adjustment	103-M
Inspection	103-K
Installation	103-L
Removal	103-J
Bevel Gear and Pinion "HD 14"	
Adjustment	104-L
Inspection	104-K
Installation	104-L
Removal	104-J
Blower	79
Assembly	79-D
Disassembly	79-B
Inspection	79-C
Removal	79-A
Specifications & Tolerances	67-R
Blower Drive Gear Assembly:	
Assembly	80-D
Disassembly	80-B
Gear Hub, Removal	80-A
Installation	80-E
Specifications & Tolerances	67-S
Brakes, Steering:	
Diagnosis & Corrections	34
Irregularities and Corrections	64
Use of	16-E
Washing	63-A-4
Brakes, Steering "HD 7"	57
Adjustment	57-A
Installation	105-J
Removal	105-A
Brakes, Steering "HD 10"	58
Adjustment	58-A
Installation	106-N
Removal	106-A
Brakes, Steering "HD 14"	59
Adjustment	59-A
Installation	107-N
Removal	107-A
Brakes, Master Clutch:	
Adjustment "HD 7"	74-B-9
Adjustment "HD 10"	75-B-10
Adjustment "HD 14"	76-B-5
Buckeye Equipment	131
C—Cam Follower Assembly:	
Inspection	78-J
Installation	78-K
Removal	78-I
Specifications & Tolerances	67-O
Camshaft	86
Disassembly	86-B
Inspection	86-C
Installation	86-E
Reassembly	86-D
Removal	86-A
Specifications & Tolerances	67-Q
Carco Equipment	130
Clutch, Master—(See "Master Clutch")	
Clutch, Steering—(See "Steering Clutch")	
Connecting Rod	83
Assemble, Rod to Piston	83-P
Bearings, Specifications & Tolerances	67-G
Bushings (Solid Bronze Type)	83-K
Bushings, Reaming (Split Type)	83-T
Inspection	83-D
Install in Engine	83-Q
Installation	83-L
Reaming, Bushings	83-M
Removal	83-C
Removal, Rod from Piston	83-G
Specifications & Tolerances	67-H
Connecting Rod Bearings:	
Inspection	82-E
Installation	82-F
Removal	82-D
Specifications & Tolerances	67-G
Control and Instruments, Use of	15
Air Heater Pump	15-E
Air Heater Push Button Switch	15-D
Ammeter	15-L
Auxiliary Shift Lever and Gear Shift Lever	15-O
Brake Pedals	15-Q
Brake Pedal Lock Lever	15-R
Dash Light and Heater Switch	15-C
Engine Oil Pressure Gauge	15-I
Engine Temperature Gauge	15-K
Fuel Oil Gauge	15-J
Fuel Shut-Off	15-A
Head Light Switch	15-H
Hour Meter	15-M
Master Clutch Lever	15-N
Radiator Shutter Control Lever	15-G
Starter Pedal	15-B
Steering Clutch Levers	15-P
Throttle Lever	15-F

TOPIC	TOPIC NO.
Cooling System:	
Care of	18
Specifications & Tolerances	67-II
Crankshaft	81
Grinding	81-B
Inspection	81-C
Installation	81-E
Installation of Oil Wick	81-D
Removal	81-A
Specifications & Tolerances	87-E
Crankshaft Timing Gear	80-J
Removal	80-I
Cylinder Block	85
Air Box Drain Tube, Installing	85-B
Disassembly	73-A
Idler Gear Oil Holes	85-A
Oil and Water Passages, Cleaning	85-C
Oil Gasket Leaks	85-D
Cylinder Head:	78
Installation	78-B
Removal	78-A
Repairs	78-C-O
Cylinder Liners	84
Air Port Carbon Removal	84-D
Installation (Loose Fit)	84-B
Installation (Press Fit)	84-C
Removal	84-A
Specifications & Tolerance	67-A
D—Dampener for Fuel Pressure Gauge	49
E—Electrical System, Specifications & Tolerances	67-FF
Electrical Equipment Warranty and Adjustment Policy	94
Engine:	
Diagnosis & Corrections	25
Disassembly	73
Idling, Effects of	19
Installation "HD 7"	74-B
Installation "HD 10"	75-B
Installation "HD 14"	76-B
Parts, Inspection	73-B
Reassembly	73-C
Removal "HD 7"	74-A
Removal "HD 10"	75-A
Removal "HD 14"	76-A
Run-In Schedule	83-A
Starting of	16-A
Specification & Tolerances (See "Specs. & Toler.)	
F—Fan	97
Belt Adjustment	51
Disassembly	97-B
Reassembly and Installation	97-C
Removal	97-A
Filters—Fuel Oil	11
First Stage	11-C
Second Stage	11-D
Filters—Lubricating Oil	10
Primary, Care of	10-A
Primary Elements, Cleaning With Solvents	10-C
Primary, Removal and Cleaning	10-B
Primary, Specifications & Tolerances	67-V
Secondary, Care of	10-E
Secondary Elements, Installation	10-D
Secondary, Specifications & Tolerances	67-W
Final Drive—Diagnosis & Corrections	30
Final Drive, "HD 7"	108
Gear and Hub, Removal	108-F
Gear Case Installation	108-G
Gear Case Removal	108-F
Inner Seal, Installation	108-E
Inner Seal, Removal	108-D
Installation on Tractor	108-G
Outer Seal, Installation	108-C
Outer Seal, Removal	108-A
Pinion, Installation	105-I
Pinion, Removal	105-B
Sprocket, Installation	108-E
Sprocket, Removal	108-D
Final Drive "HD 10"	109
Bearing Adjustment	109-D
Gear Case Installation	109-D
Gear Case, Removal	109-C
Inner Seal, Installation	109-D
Inner Seal, Removal	109-C
Outer Seal, Installation	109-B
Outer Seal, Removal	109-A
Pinion, Installation (Standard Tread)	106-L
Pinion, Installation (Wide Tread)	106-M
Pinion, Removal	106-B
Pinion, Removal (Wide Tread)	106-C
Sprocket, Installation	109-D
Sprocket, Removal	109-C
Final Drive, "HD 14"	110
Axle Bracket and Packing, Removal	110-A
Bearing, Adjustment	110-J
Gear and Case, Installation	110-F
Gear and Case, Removal	110-D
Inner Packing, Installation	110-G
Inner Packing, Removal	110-C
Parts, Inspection	110-E
Pinions, Installation	107-M
Pinions, Removal	107-C
Rear Axle Bracket, Installation	110-J
Sprocket, Installation	110-H
Sprocket, Removal	110-B
Final Drive Sprocket Shaft	111
Installation	111-B
Removal	111-A
Flywheel	88
Inspection	88-B
Installation	88-C
Removal	88-A
Flywheel Housing	87
Inspection	87-B
Installation	87-C
Removal	87-A

TOPIC	TOPIC NO.
Front Idler	61
Adjustment	61-A
Diagnosis & Corrections	38
Disassembly	122-A
Lubrication	7
Reassembly	122-B
Repairs	122
Fuel Oil Manifold:	
Installation	78-N
Removal	78-O
Fuel Pump	91
Disassembly	91-B
Inspection	91-C
Installation	91-E
Reassembly	91-D
Removal	91-A
Specifications & Tolerances	67-DD
Fuel Shut-Off and Air Valve Control	46
First Type Control	46-A
Second Type Control	46-B
Fuel System and Filters (See Filters-Fuel Oil)	
Fuels:	
Specifications	1
Storage of	23
G—Gar Wood Equipment	128
Gasket Sealing	79-H
Gear Shifting Levers, Use of	16-B
Gear Train, Engine	80
Blower Drive Gear, Assembly	80-D
Blower Drive Gear, Disassembly	80-B
Blower Driver Gear, Installation	80-E
Blower Gear Hub, Removal	80-A
Crankshaft Timing Gear, Removal	80-I
Crankshaft Timing Gear, Installation	80-J
Idler Gear and Hub, Inspection	80-G
Idler Gear, Installation	80-H
Idler Gear, Removal	80-F
Inspection	80-C
Specifications & Tolerances	67-I
Gear Train Cover	87
Inspection	87-B
Installation	87-C
Removal	87-A
Generator	96
Belt Adjustment	50
Generator and Battery, Care of	20
Testing and Adjusting	96-A
Specifications & Tolerances	67-AA
Governor	93
Adjustment	93-G & 45
Causes for Speed Variations	45-A
Control Housing, Disassembly	93-C
Inspection	93-E
Operating Shaft, Disassembly	93-D
Reassembly	93-F
Removal	93-A
Specifications & Tolerances	67-EE
Variable Speed Spring Housing, Assembly	93-F
Variable Speed Spring Housing, Disassembly	93-B
H—Hour Meter:	
Adjustment	66
Diagnosis & Corrections	29
How to Read	22
I—Idler Gear and Hub—Engine Gear Train:	
Inspection	80-G
Installation	80-H
Removal	80-F
Specifications & Tolerances	67-V
Injector	77
Assembly	77-E
Copper Tube, Installation	78-M
Copper Tube, Removal	78-L
Disassembly	77-B
Equalizing	43
Injector Tip and Valve Assembly	77-D
Inspection	77-C
Installation	77-G
Removal	77-A
Specifications & Tolerances	67-CC
Testing	77-F
Timing	42
Instruments and Controls, Use of (See "Controls")	
L—Lubrication:	
Front Idler	7
Routine Service	2
Service Chart, "HD 7"	3
Service Chart, "HD 10"	4
Service Chart, "HD 14"	5
Specifications of Lubricants	1
Support Roller	8
Truck Wheel	6
M—Main Bearings—Crankshaft	82
Inspection	82-B
Installation	82-C
Removal (Crankshaft in Place)	82-A
Specifications & Tolerances	67-F
Master Clutch:	
Irregularities and Corrections	62
Use of	16-C
Washing	62-C & D
Master Clutch, "HD 7":	
Adjustment	52-A
Brake Adjustment	74-B-9
Inspection	99-B
Installation	99-C
Removal	99-A
Master Clutch, "HD 10":	
Adjustment	53-A
Brake Adjustment	75-B-10
Inspection	100-B
Installation	100-C
Removal	100-A
Master Clutch, "HD 14":	
Adjustment	54-A
Atwood Master Clutch	101-D
Brake Adjustment	76-B-5

TOPIC	TOPIC NO.
Inspection	101-B
Installation	101-C
Removal	101-A
Master Clutch Shaft	
Installation "HD 7"	102-D
Installation "HD 10"	103-C
Installation "HD 14"	104-E
Removal "HD 7"	102-C
Removal "HD 10"	103-A
Removal "HD 14"	104-D
Motor (See "Engine"):	
Motor, Starter (See "Starter Motor")	
O—Oil Cooler:	
Cleaning	10-E
Inspection	90-B
Installation	90-C
Removal	90-A
Specifications & Tolerances	67-U
Oil Filters, Lubricating (See Filters—Lubricating Oil)	
Oil Gasket Leaks, Cylinder Head	85-D
Oil Pressure Specifications & Tolerances	67-X
Oil Pump, Lubricating	89
Assembly	89-D
Disassembly	89-B
Inspection	89-C
Installation	89-E
Removal	89-A
Operating Tractor (See "Putting Tractor to Work")	
Operating in Mud or Water	17
P—Pilot Bearing, Care of	9
Pistons:	
Bushings From Pistons, Removal (Solid Bronze Type)	83-H
Bushing, Installation	83-I
Bushing, Reaming	83-J
Bushing, Removal (Split Type)	83-R
Bushing, Installation (Split Type)	83-S
Bushing, Reaming (Split Type)	83-T
Engine Run-In Schedule	83-A
Fitting	83-E
Inspection	83-D
Installation in Engine	83-Q
Piston Specifications & Tolerances	67-B
Removal	83-C
Rings, Fitting	83-F
Rings (Oil Control) Specifications & Tolerances	67-D
Rings (Compression) Specifications & Tolerances	67-C
Rod to Piston, Assembly	83-P
Rod From Piston, Removal	83-G
Pre-Cleaners:	
Care of	12
Specifications & Tolerances	67-HH
Pre-Heater, Engine:	
Operation	21
Repairs	47-A
Preparing Tractor for Use	14
Pump, Fuel—(See "Fuel Pump")	
Pump, Water—(See "Water Pump")	
Pump, Lubricating Oil (see "Oil Pump")	
Putting Tractor to Work	16
Gear Shifting Levers, Use of	16-B
Master Clutch, Use of	16-C
Starting the Engine	16-A
Steering Brakes, Use of	16-E
Steering Clutch Levers, Use of	16-D
Stopping Engine	16-G
Stopping Tractor	16-F
R—Radiator	98
Inspection	98-B
Installation	98-C
Removal	98-A
Reverse Gear Set—Transmission:	
Installation "HD 7"	102-F
Installation "HD 10"	103-I
Installation "HD 14"	104-G
Removal "HD 7"	102-E
Removal "HD 10"	103-G
Removal "HD 14"	104-F
Rocker Arms	78
Specifications & Tolerances	67-N
Routine Service	2
S—Serial Number Location (Tractor & Engine)	124
Service Chart (See "Lubrication")	
Sliding Gear Shaft—Transmission:	
Installation "HD 14"	104-C
Removal "HD 14"	104-A
"HD 7" & "HD 10" (See "Top Shaft")	
Specifications:	
Engine Crankcase Lubricant	1-A
Fuel Oil	1-A
Pressure Gun Lubricant	1-C
Torque Wrench	68
Tractor	On 2nd Page Following Index
Transmission, Final Drive, Truck Wheel, Front Idler and Support Roller Lubricant	1-B
Specifications & Tolerances, Engine	67
Air Cleaner (Oil Bath)	67-GG
Balance Shaft	67-P
Blower	67-P
Blower Drive Gear	67-S
Cam Followers	67-O
Cam Shaft	67-Q
Connecting Rods	67-H
Connecting Rod Bearings	67-G
Cooling System	67-II
Crankshaft	67-E
Cylinder Liners	67-A
Electrical System	67-FF
Gear Train	67-I
Generator	67-AA
Governor	67-EE
Idler Gear	67-J
Injector	67-CC
Main Bearings	67-F
Oil Cooler	67-U

TOPIC	TOPIC NO.
Oil Filter, Primary	67-V
Oil Filter, Secondary	67-W
Oil Pressure	67-X
Oil Pump—Lubricating	67-T
Pistons	67-B
Piston Rings (Compression)	67-C
Piston Rings (Oil Control)	67-D
Pre-Cleaner	67-HH
Pump, Fuel	67-DD
Pump, Water	67-CC
Rocker Arms,	67-N
Starter	67-Z
Timing, Intake & Exhaust	67-Y
Valve, Exhaust	67-K
Valve, Guide	67-M
Valve Insert	67-L
Spiral Bevel Gear—(See "Bevel Gear & Pinion")	
Sprocket, Removal	110-B
Sprocket Shaft	111
Installation	111-B
Removal	111-A
Sprocket Shaft Bearing, Adjustment	60-A
Stabilizer Assembly Diagnosis & Corrections	31
Stabilizer Assembly, "HD 7"	112
Inspection of Parts	112-B
Installation	112-C
Removal	112-A
Stabilizer Assembly, "HD 10"	113
Inspection of Parts	113-B
Installation	113-C
Removal	113-A
Stabilizer Assembly, "HD 14"	114
Inspection of Parts	114-B
Installation	114-C
Removal	114-A
Stabilizer Spring	115
Diagnosis & Corrections	32
Installation	115-B
Removal	115-A
Starter Motor	95
Operation	15-B
Starting Engine	16-A
Specifications & Tolerances	67-Z
Steering Brakes, Use of	16-E
Steering Brakes, "HD 7":	
Adjustment	57-A
Installation	105-J
Removal	105-A
Steering Brakes, "HD 10":	
Adjustment	58-A
Installation	106-N
Removal	106-A
Steering Brakes, "HD 14":	
Adjustment	59-A
Removal & Installation	107-A
Steering Clutches:	
Diagnosis & Corrections	33
Irregularities & Corrections	63
Use of	16-D
Washing	63-A-4

TOPIC	TOPIC NO.
Steering Clutches, "HD 7"	105
Adjustment	55-A
Assembly	105-F
Disassembly	105-D
Inspection	105-E
Installation (First Type Clutch Shaft)	105-G
Installation (Second Type Clutch Shaft)	105-H
Removal (First Type Clutch Shaft)	105-A
Removal (Second Type Clutch Shaft)	105-C
Steering Clutches, "HD 10"	106
Adjustment	56-A-B
Assembly	106-I
Disassembly	106-G
Inspection	106-H
Installation (First Type Clutch Shaft)	106-J-N
Installation (Second Type Clutch Shaft)	106-K-N
Removal (First Type Clutch Shaft)	106-A-E
Removal (Second Type Clutch Shaft)	106-F
Steering Clutches "HD 14":	
Adjustment	56-A-B
Assembly (First Type)	107-H
Assembly (Ventilated Adjustable Type)	107-K
Disassembly (First Type)	107-F
Disassembly (Ventilated Adjustable Type)	107-J
Field Installation of Adjusting Screws (Ventilated Type)	107-N
Inspection	107-G
Installation (First Type Clutch Shaft)	107-L
Installation (Second Type Clutch Shaft)	107-L
Removal (First Type Clutch Shaft)	107-A-D
Removal (Second Type Clutch Shaft)	107-E
Stopping Engine	16-G
Stopping Tractor	16-F
Storage of Fuels	23
Storage of Tractor	24
Support Roller:	
Diagnosis & Corrections	37
Disassembly	123-A & 122-A
Lubrication	8
Reassembly	123-B & 122-B
T—Temperature Gauge—Diagnosis & Corrections	28
Timing:	
Diagram (Engine)	69
Injector	42
Intake & Exhaust Specification & Tolerances	67-Y

TOPIC	TOPIC NO.
Tool Equipment:	
Allis-Chalmers, Special	126
Kent Moore, Special	127
Top Shaft:	
Installation, "HD 7"	102-B
Installation, "HD 10"	103-F
Removal, "HD 7"	102-A
Removal, "HD 10"	103-D
"HD 14" (See Sliding Gear Shaft)	
Torque Wrench—Specifications	68
Tracks:	
Adjustment	119-D-61
Diagnosis & Corrections	39
Inspection	119-B
Install	119-C
Irregularities and Corrections	65
Uncouple	119-A
Track Release Assembly, Diagnosis & Corrections	40
Track Release Housing, "HD 7"	116
Disassembly	116-B
Inspection	116-C
Installation	116-D
Removal	116-A
Track Release Housing, "HD 10"	117
Disassembly	117-B
Inspection	117-C
Installation	117-D
Removal	117-A
Track Release Housing, "HD 14"	118
Disassembly	118-B
Inspection	118-C
Installation	118-D
Removal	118-A
Tractor Inspection	125
Tractor, Storage	24
Transmission and Gear Shift—Diagnosis and Corrections	35
Transmission, "HD 7"	102
Bevel Gear and Pinion Removal	102-G
Bevel Gear and Pinion Installation	102-H
Bevel Gear Packing	102-I
Master Clutch Shaft, Installation	102-D
Master Clutch Shaft, Removal	102-C
Reverse Idler Gear, Installation	102-F
Reverse Idler Gear, Removal	102-E
Seals, Bevel Gear (Non-Adjustable)	102-J
Top Shaft, Installation	102-B
Top Shaft, Removal	102-A
Transmission, "HD 10"	103
Bevel Gear, Adjustment	103-M
Bevel Gear and Pinion, Inspection	103-K
Bevel Gear and Pinion, Installation	103-L
Bevel Gear and Pinion, Removal	103-J
Inspection	103-B
Master Clutch Shaft, Installation	103-C
Master Clutch Shaft, Removal	103-A
Reverse Idler Shaft, Inspection	103-H
Reverse Idler Shaft, Installation	103-I
Reverse Idler Shaft, Removal	103-G
Top Shaft, Inspection	103-E
Top Shaft, Installation	103-F
Top Shaft, Removal	103-D
Transmission, "HD 14"	104
Auxiliary Gear and Shaft, Installation	104-I
Auxiliary Gear and Shaft, Removal	104-H
Bevel Gear and Pinion, Inspection	104-K
Bevel Gear and Pinion, Installation	104-L
Bevel Gear and Pinion, Removal	104-J
Change Sped Group	104-M
Inspection	104-B
Master Clutch Shaft, Installation	104-E
Master Clutch Shaft, Removal	104-D
Reverse Gear Set, Installation	104-G
Reverse Gear Set, Removal	104-F
Sliding Gear Shaft, Installation	104-C
Sliding Gear Shaft, Removal	104-A
Truck Frame:	
Assembly	120-B
Diagnosis and Corrections	41
Removal	120-A
Truck Wheels	121
Diagnosis & Corrections	36
Disassembly	122-A
Installation	121-B
Lubrication	6
Reassembly	122-B
Removal	121-A
V—Valve and Valve Seats, Reconditioning	78-D-H
Valve Exhaust, Specifications & Tolerances	67-K
Valve Guides:	
Removal and Installation	78-F
Specifications & Tolerances	67-M
Valve Insert:	
Removal and Installation	78-G
Specifications and Tolerances	67-L
Valve Lash	44
Valve Spring, Spring Seat, and Spring Cap (New Type)	78-E
Ventilated, Adjustable, Steering Clutch	107-I
W—Warranty and Adjustment Policy, Electrical Equipment	94
Washing:	
Master Clutch	62-C & D
Steering Clutches & Brakes	63-A-4
Water Pump	92
Assembly	93-C
Disassembly	93-B
Installation	93-D
Removal	92-A
Specifications & Tolerances	67-BB
Wiring Diagram, "HD 7"	70
Wiring Diagram, "HD 10"	71
Wiring Diagram, "HD 14"	72

The Serial Number

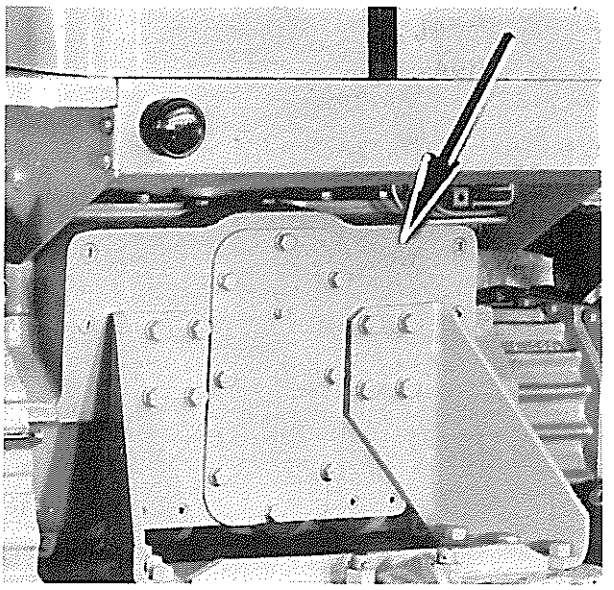

"HD 7"

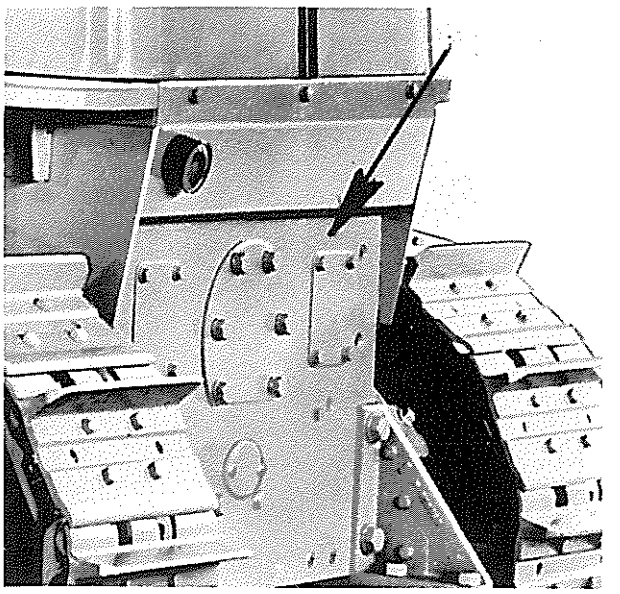

"HD 10"

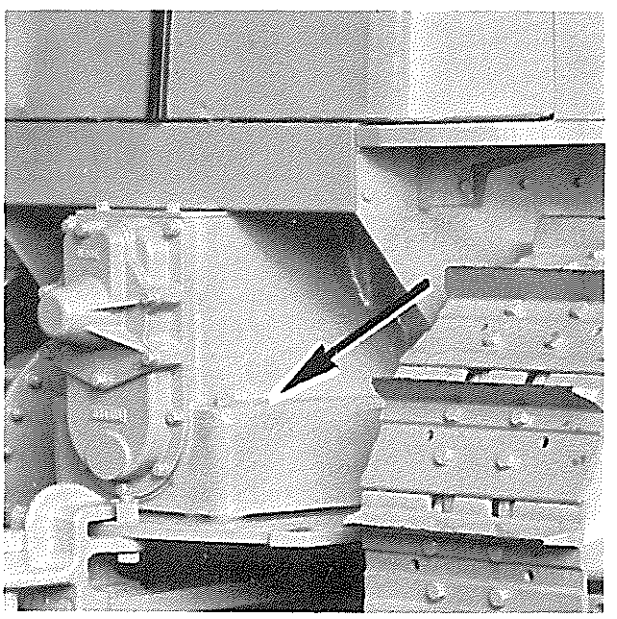

"HD 14"

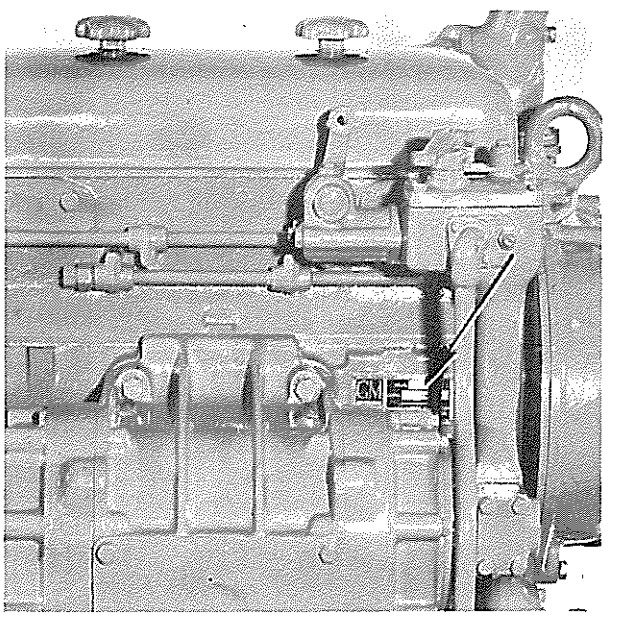

"HD 7", "HD 10" & "HD 14" ENGINE

The Serial Number is IMPORTANT. A tractor has a serial number for the same reason that a man has a name. It is the legal identification used on bills of sale, contracts, mortgages and insurance policies. Also, it is absolutely necessary on all repair parts orders to insure getting correct parts. Don't fail to show correct serial number wherever required.

On HD7 and HD10 tractors the serial number is at upper right hand corner of back of transmission case; on the HD14 it is on the right hand side of rear transmission case—stamped into the top of flange.

Also most documents require, in addition, the engine serial number. This number will be found on right side of engine block just back of governor tower. Engine serial number must be shown on all orders for engine parts.

It is advisable to carry insurance on your tractor. You can protect yourself from loss by fire, theft, personal liability, property damage, collision, submersion and other hazards. Because of the greater investment in tractor equipment, is is relatively more important to carry insurance on such equipment than on an automobile.

Specifications

	HD-7	HD-10	HD-14
Drawbar H.P. (at Rated Speed in Second Gear)	54.87	74.9	132.19
Belt H.P.	64.8	89.5	150.48
Width of Tread (Narrow)	52"	62"	
(Wide)	63"	74"	68
Shipping Weight (Narrow Tread)	13830 lbs.	21000 lbs.	
(Wide Tread)	14000 lbs.	21600 lbs.	29000 lbs.
SPEEDS AT RATED ENGINE SPEED			
First Gear	1.59 M.P.H.	1.57 M.P.H.	1.72 M.P.H.
Second Gear	2.19 M.P.H.	2.06 M.P.H.	2.18 M.P.H.
Third Gear	2.97 M.P.H.	2.68 M.P.H.	2.76 M.P.H.
Fourth Gear	5.00 M.P.H.	3.54 M.P.H.	3.50 M.P.H.
Fifth Gear		4.62 M.P.H.	4.36 M.P.H.
Sixth Gear		6.03 M.P.H.	7.00 M.P.H.
Low Reverse	1.89 M.P.H.	1.85 M.P.H.	2.00 M.P.H.
High Reverse		4.17 M.P.H.	3.20 M.P.H.
DRAWBAR H.P. AND DRAWBAR PULLS (at Rated Engine Speed)	H.P. PULL	H.P. PULL	PULL
First Gear	50.74-*12600	74.6-*18650	28019
Second Gear	54.87- 9705	74.9- 14050	22699
Third Gear	54.44- 7015	74.4- 10605	17265
Fourth Gear	53.86- 4070	72.2- 7730	13769
Fifth Gear		68.2- 5585	10074
Sixth Gear		62.0- 3385	5579
Low Reverse	54.54- 11300	74.9- 15650	
High Reverse		70.0- 6350	

*Based on 90% of tractor weight (Wide Tread)

ENGINE			
Lubrication	Forced Feed	Forced Feed	Forced Feed
Make	General Motors Diesel	General Motors Diesel	General Motors Diesel
Type	Two Cycle	Two Cycle	Two Cycle
Number of Cylinders	3	4	6
Unit Fuel Injector Output (C.U.MM.)	60	60	60
Bore and Stroke	4¼" x 5"	4¼" x 5"	4¼" x 5"
Piston Displacement (Cu. In.)	213	284	425
R.P.M. Governed at Full Load	1500	1600	1500
R.P.M. at Low Idle Engine Speed	450	450	450
R.P.M. at High Idle Engine Speed	1650	1750	1650
Maximum Net Torque (Foot Pounds)	254	341	511
R.P.M. at Maximum Net Torque	1000	900	1050
Piston Speed (F.P.M.)	1250	1333	1250
Crankshaft—Number and Diameter of Main Bearings	4—3½"	5—3½"	7—3½"
STEERING			
Method	Clutch	Clutch	Clutch
Number of Friction Surfaces Each Clutch	22	30	40
Area of Each Friction Surface—Sq. In.	41.57	48.8	66.15
Total Friction Area—Each Clutch—Sq. In.	914.54	1464	2646
Turning Radius—Narrow Tread	84"	98"	
Wide Tread	88"	104"	114"
TRACKS			
Length of track on ground (Center of sprocket to center of front idler)	67"	84-15/16"	85-7/16"
Ground Contact—Standard Shoes—Sq. In.	2144	3058	3759
Width of Standard Track Shoes	16"	18"	22"
Maximum Width Track Shoes—Narrow Tread	16"	20"	
Wide Tread	28"	30"	24"
Maximum Width Track Shoe Available—Narrow Tread	16"	18"	
Wide Tread	24"	24"	24"
Height of Grouser	2¾"	2-19/32"	2⅝"
Diameter of Track Shoe Bolts-Shoulder	9/16"	⅝"	¾"
Diameter of Track Pins	1-9/16"	1¾"	1⅞"
Diameter of Track Pin Bushings	2-5/16"	2½"	2¾"
Number of Track Shoes—Each Track	34	34	35
Ground Pressure—Lbs. Per Sq. In.—Narrow Tread	6.45	6.87	
Wide Tread	6.53	7.06	7.39
TRUCK WHEELS			
Number on Each Side	5	6	5
Type of Seal	Positive	Positive	Positive
Type of Bearing	Tapered Roller	Tapered Roller	Tapered Roller
Lubrication Intervals	1000 hours	1000 hours	1000 hours
TRACK SUPPORT ROLLERS			
Number on Each Side	1	1	1
Type of Bearing	Tapered Roller	Tapered Roller	Tapered Roller
Lubrication Intervals	1000 hours	1000 hours	1000 hours

FRONT IDLERS			
Number on Each Side	1	1	1
Type of Seal	Positive	Positive	Positive
Type of Bearing	Tapered Roller	Tapered Roller	Tapered Roller
Lubrication Intervals	1000 hours	1000 hours	1000 hours
GENERAL DIMENSIONS			
Overall Length	10' 7¼"	12' 6-7/16"	13' 9"
Overall Height (without stacks)	5' 6-9/16"	6' 3⅛"	6' 8"
Overall Width—Narrow Tread	6' 10"	6' 10-11/16"	
Wide Tread	7' 9"	7' 10-11/16"	7' 7¾"
Ground Clearance	9-13/16"	11⅝"	13½"
Drawbar Height	11⅜"	14-5/32"	15⅝"
Lateral Drawbar Movement	19½"	32"	30"
CAPACITIES			
Cooling System	5¾ gal.	9¾ gal.	12 gal.
Crankcase	11 qts.	13 qts.	14 qts.
Transmission Case	26 qts.	28 qts.	40 qts.
Final Drive (each)	7 qts.	8 qts.	8 qts.
Fuel Tank	31 gal.	44 gal.	68 gal.
Track Release Spring Housing (each)	4 qts.	7½ qts.	13 qts.
Air Cleaner	2½ qts.	2 qts.	2½ qts.
POWER PULLEY			
Pulley Diameter	10 or 12"	13⅜"	18 or 20"
Pulley Width	8¾"	10"	15"
Pulley R.P.M.	889	412 and 929	405 and 650
Belt Speed—Foot Per Minute	2327 and 2793	1443 and 3253	2121 and 3400
Direction of Rotation (Viewed from life side of tractor)	Clockwise	Clockwise	Clockwise
STRAIGHT POWER TAKE-OFF			
Shaft R.P.M. at Rated Engine Speed	889	192 and 430	935 and 1500
Direction of Rotation (Viewed from rear of tractor)	Counter Clockwise	Counter Clockwise	Counter Clockwise
REVERSIBLE REDUCTION POWER TAKE-OFF			
Shaft R.P.M. at Rated Engine Speed	Clockwise 336 Counter Clockwise 269	Clockwise 191 & 430 Counter Clockwise 148 and 334	
NON-REVERSIBLE REDUCTION POWER TAKE-OFF			
Shaft R.P.M. at Rated Engine Speed	574		
Direction of Rotation (Viewed from rear of tractor)	Clockwise		

The Allis-Chalmers Manufacturing Company reserves the right to make changes in the above specifications or to add improvements at any time without notice or obligation.

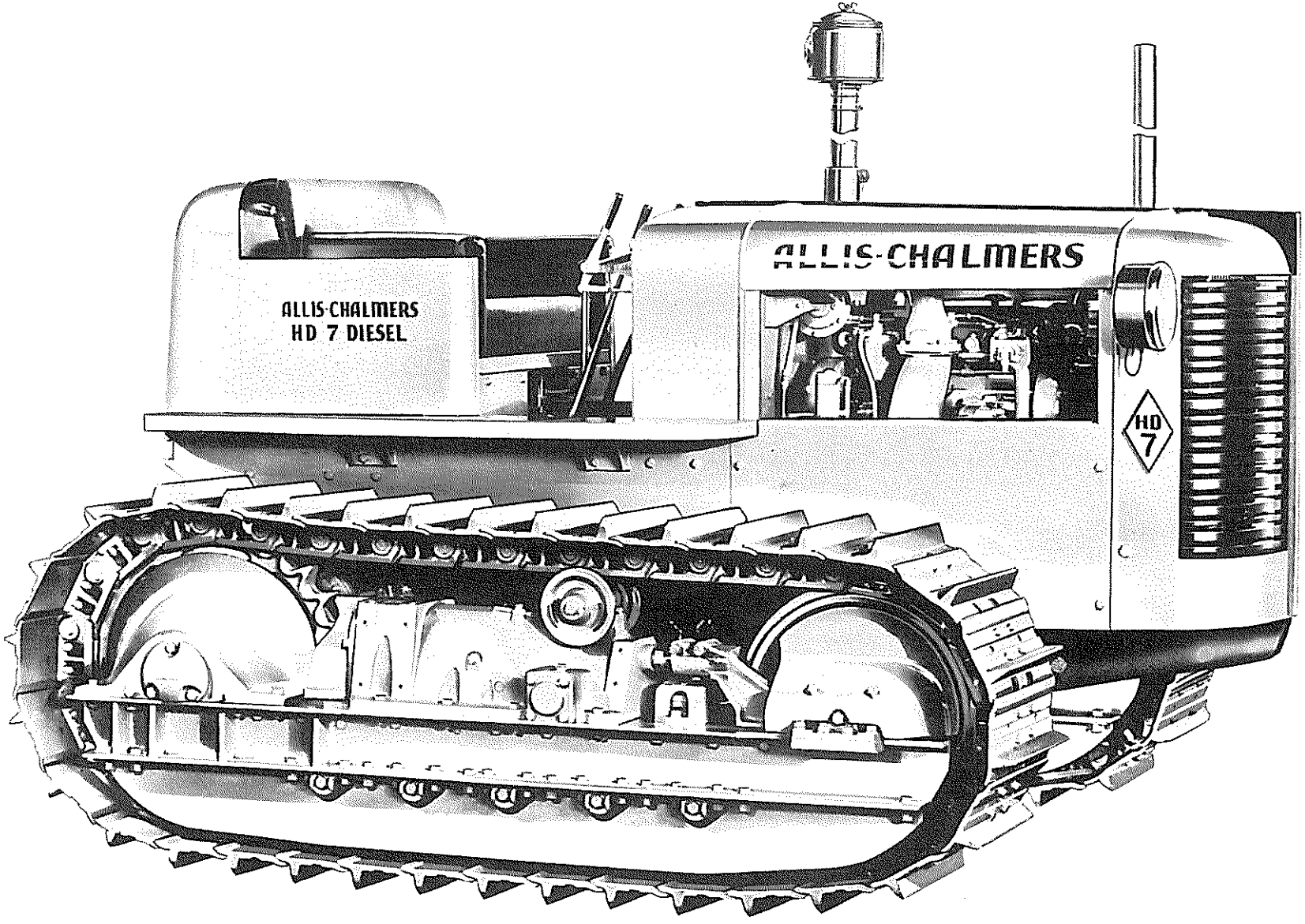

MODEL "HD 7" TRACTOR

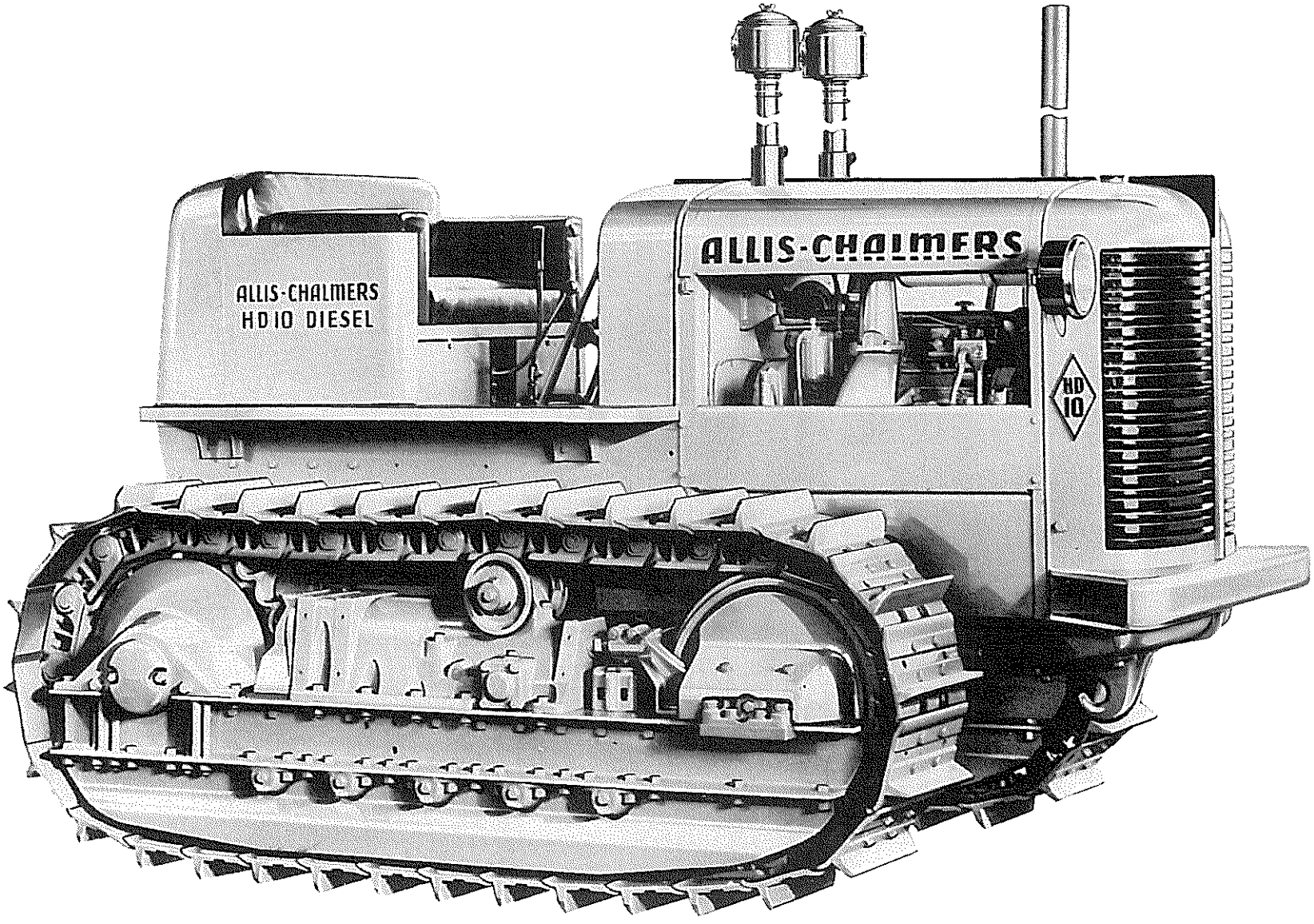

MODEL "HD 10" TRACTOR

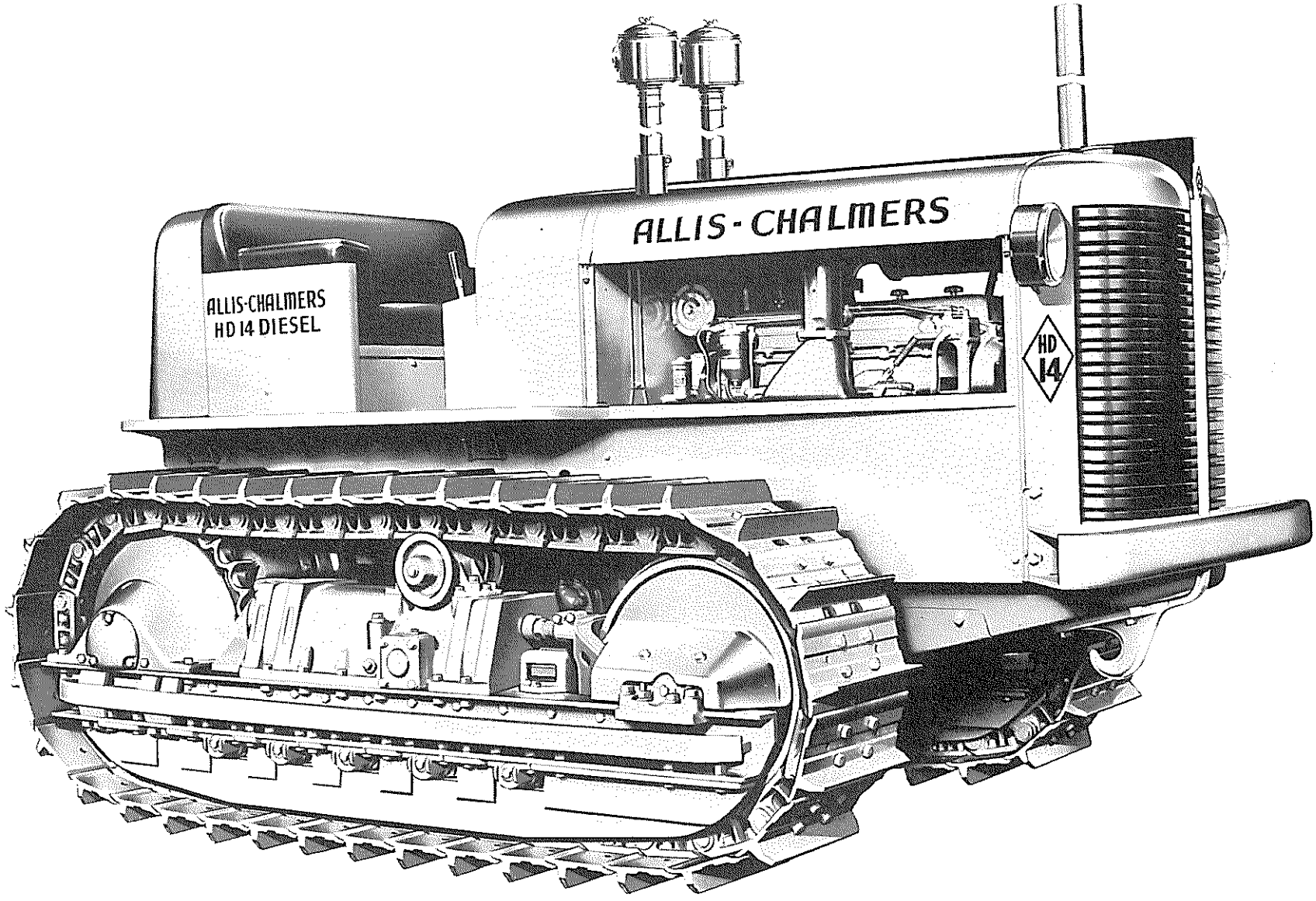

MODEL "HD 14" TRACTOR

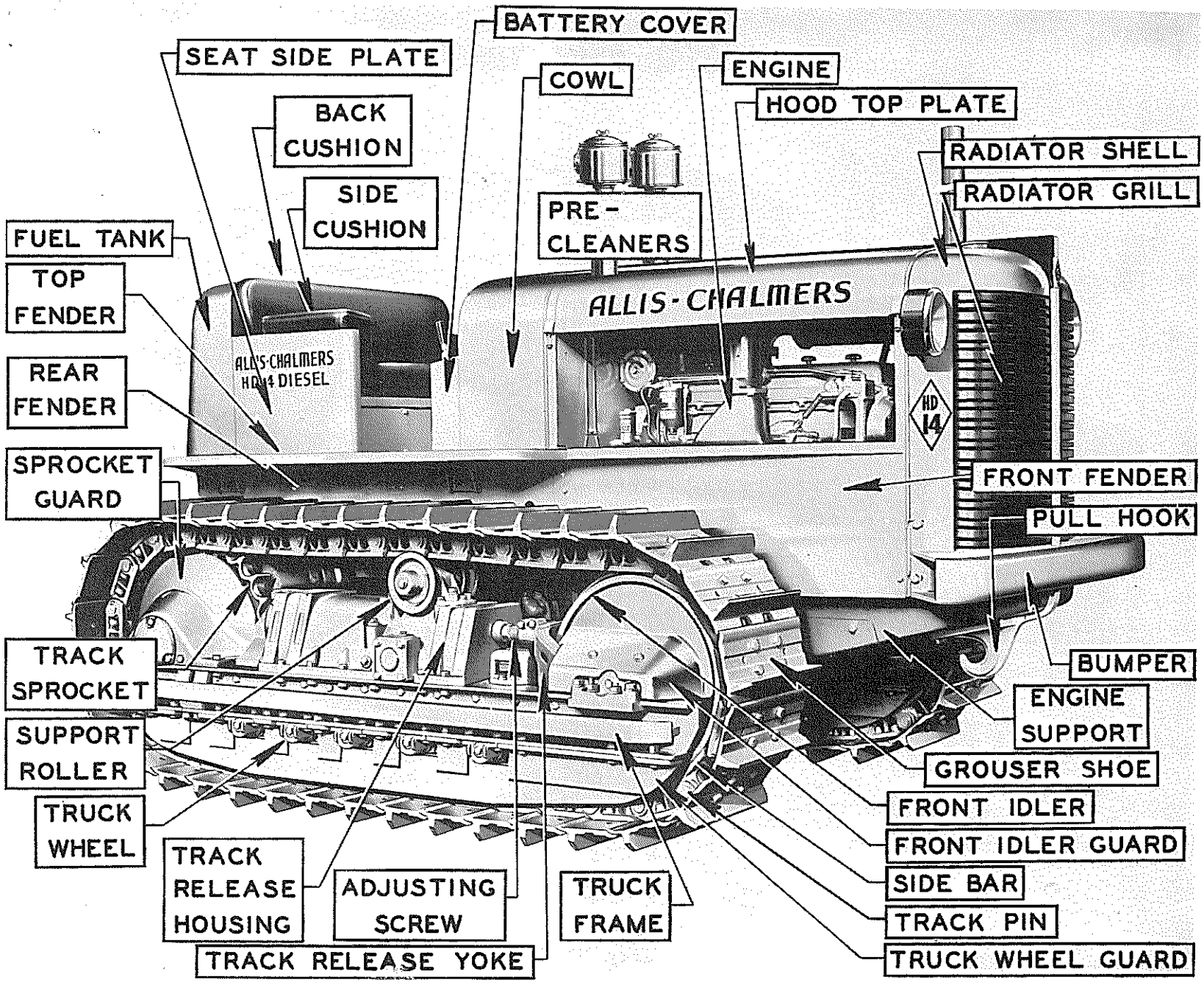

HD 14" TRACTOR NOMENCLATURE

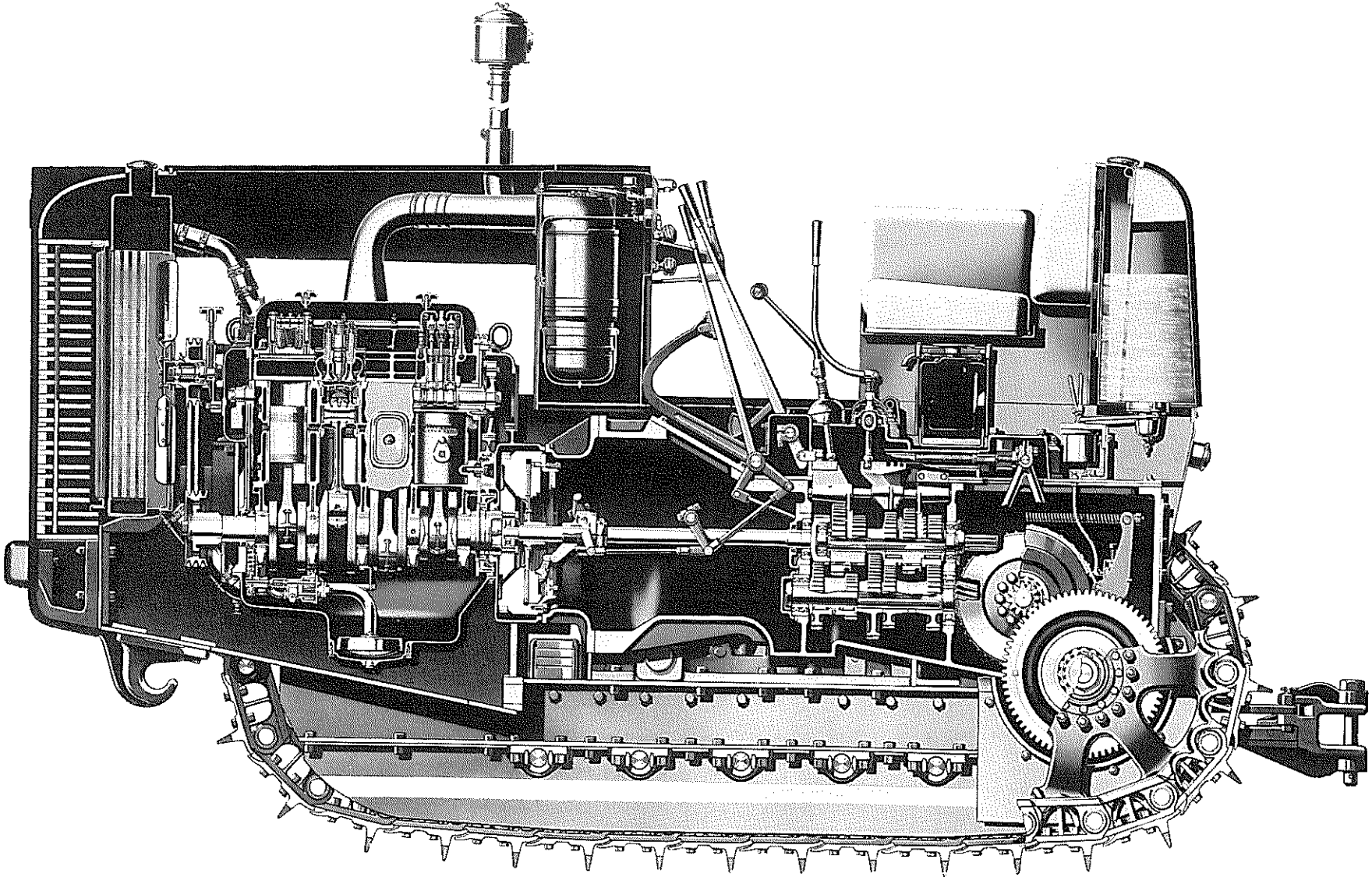

MODEL "HD 10" TRACTOR

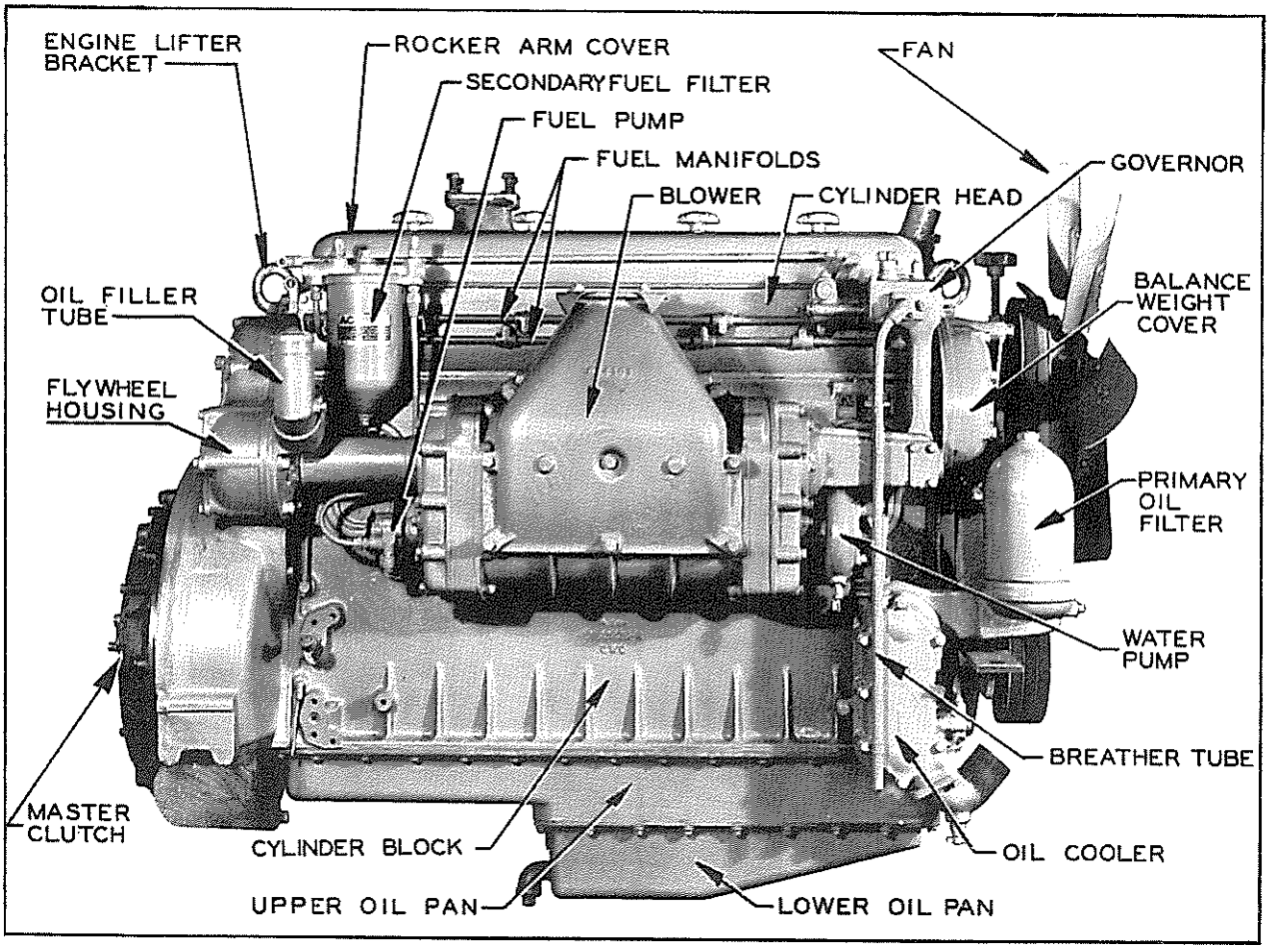

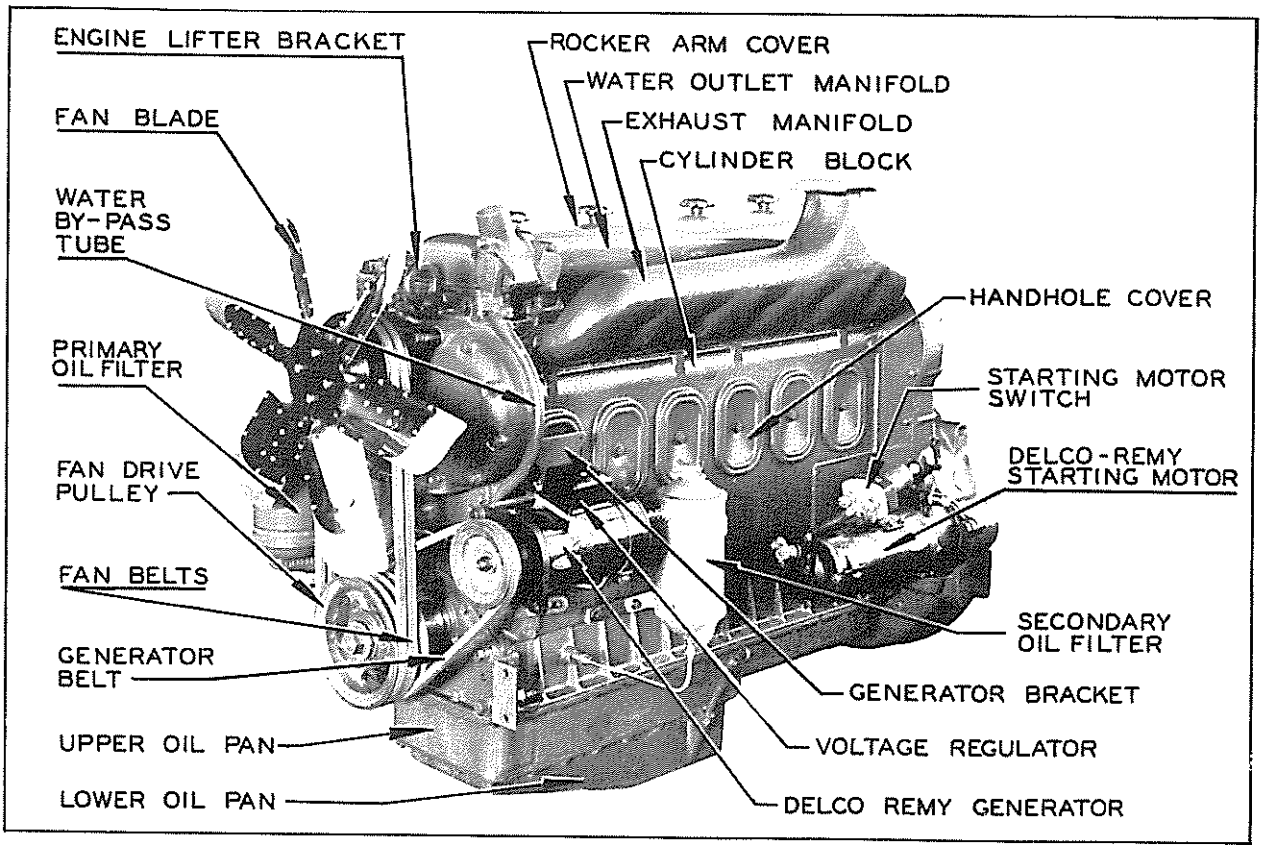

"HD 14" ENGINE NOMENCLATURE

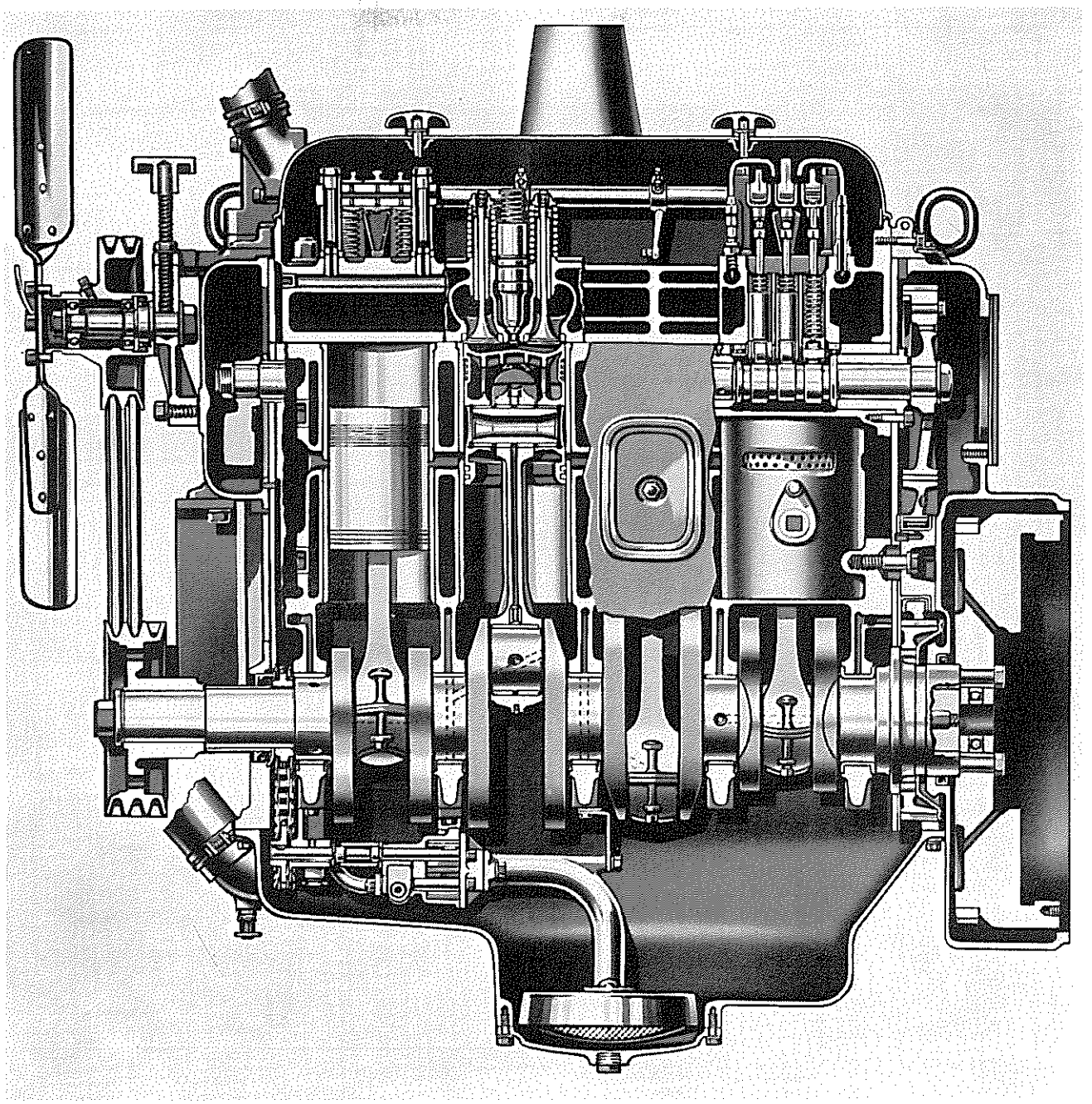

SECTIONAL VIEW OF "HD 10" ENGINE

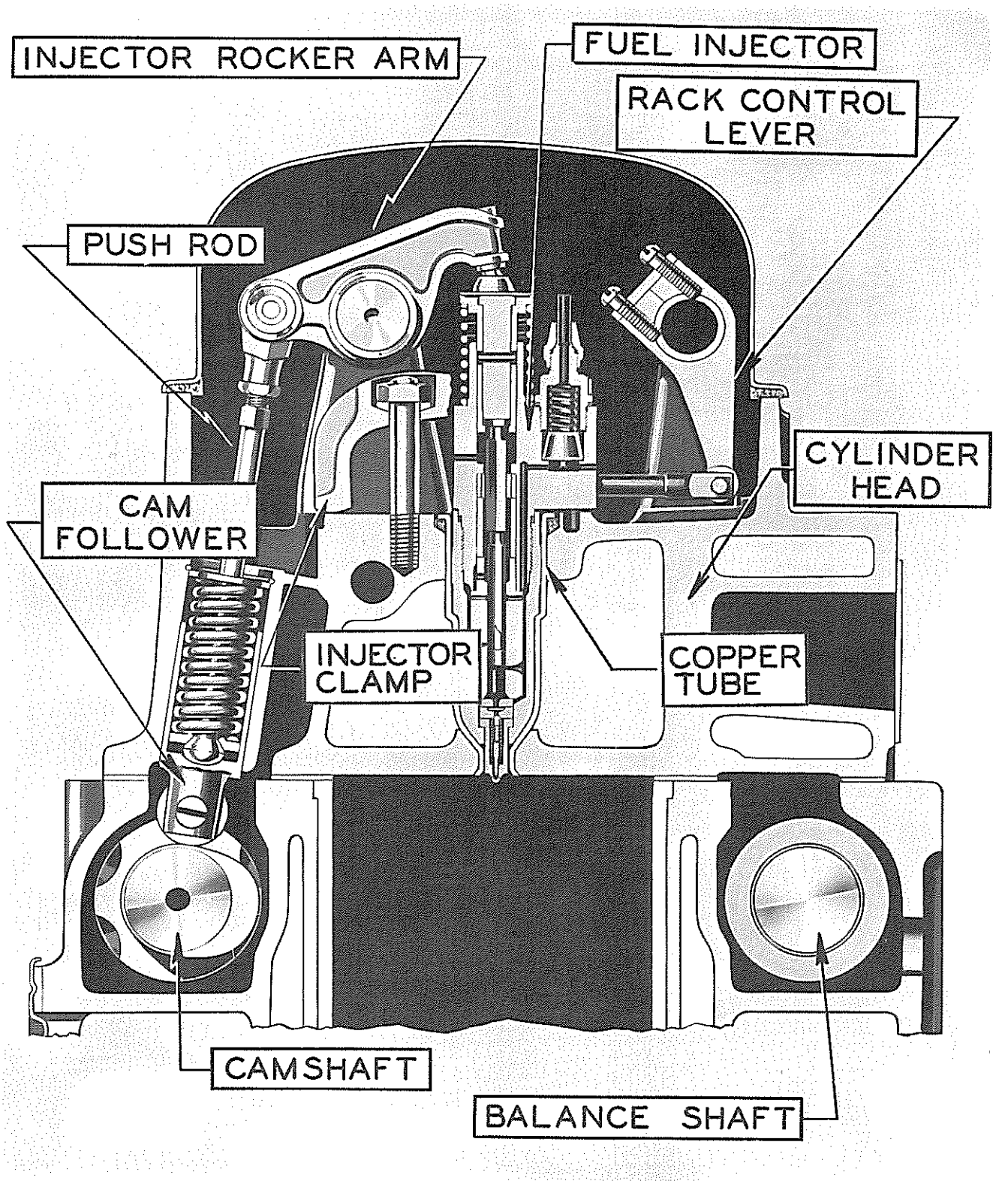

INJECTOR & OPERATING MECHANISM

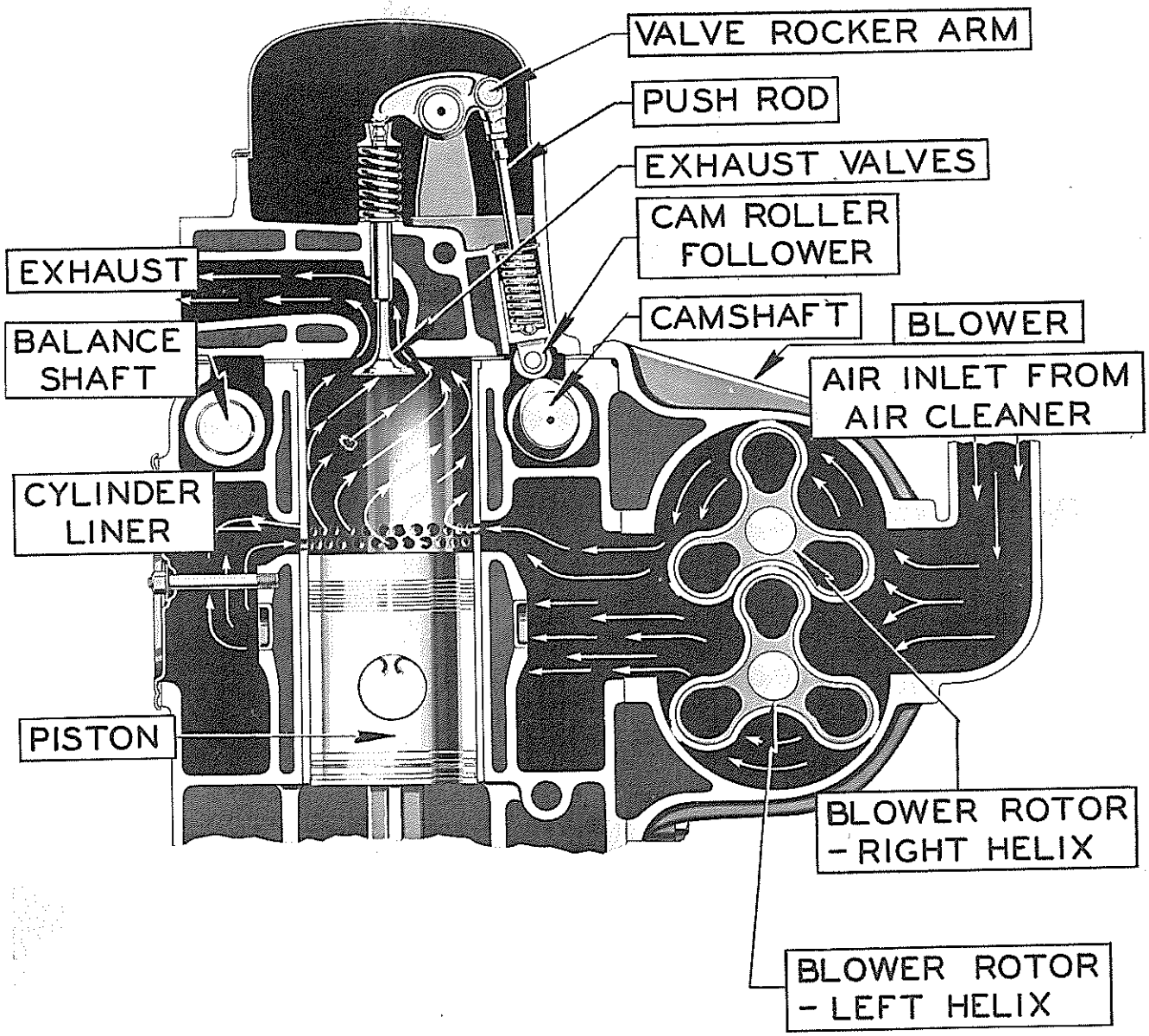

AIR FLOW THROUGH ENGINE

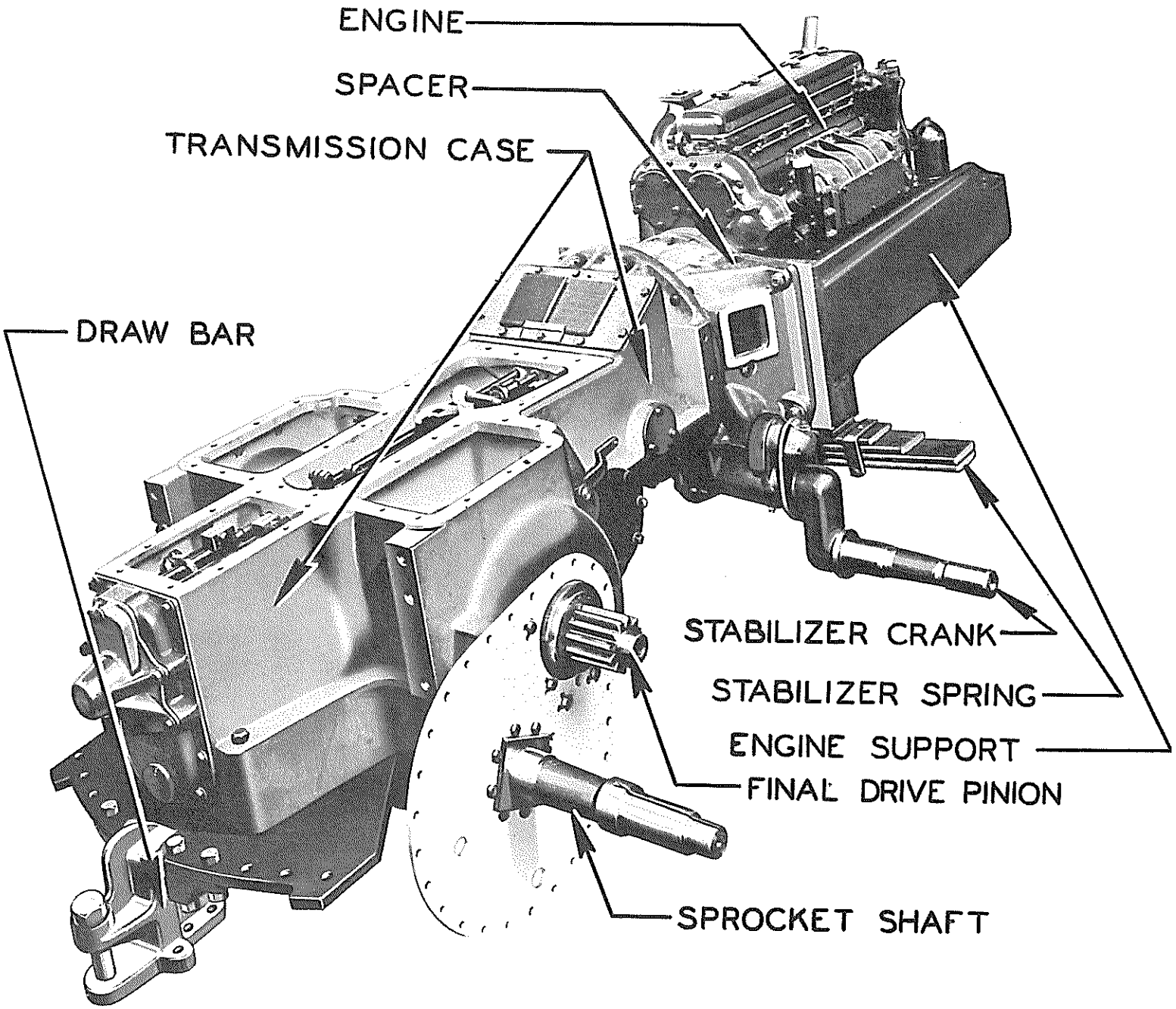

"HD 14" TRACTOR TRANSMISSION, SPACER & ENGINE

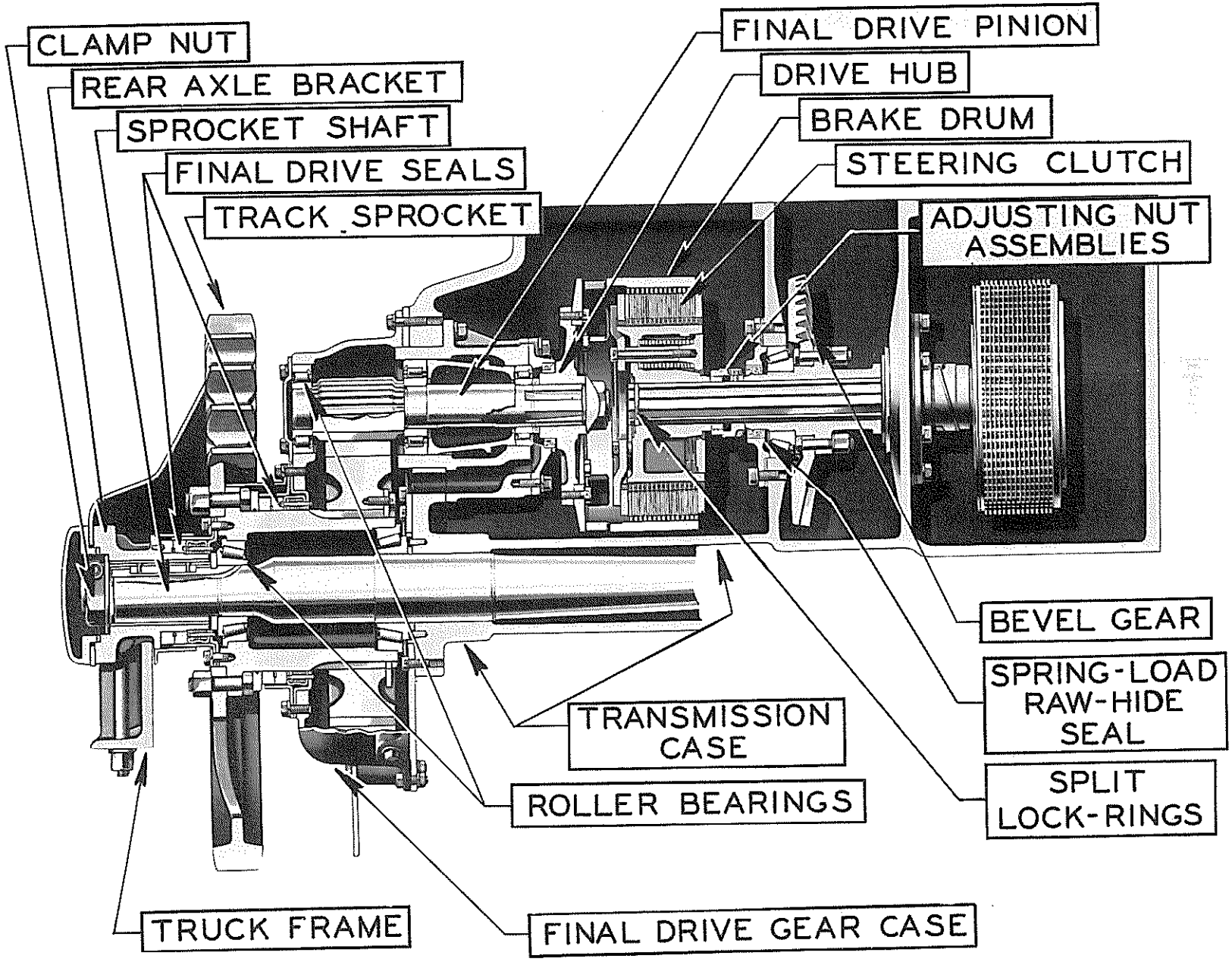

"HD 10" FINAL DRIVE & STEERING CLUTCH

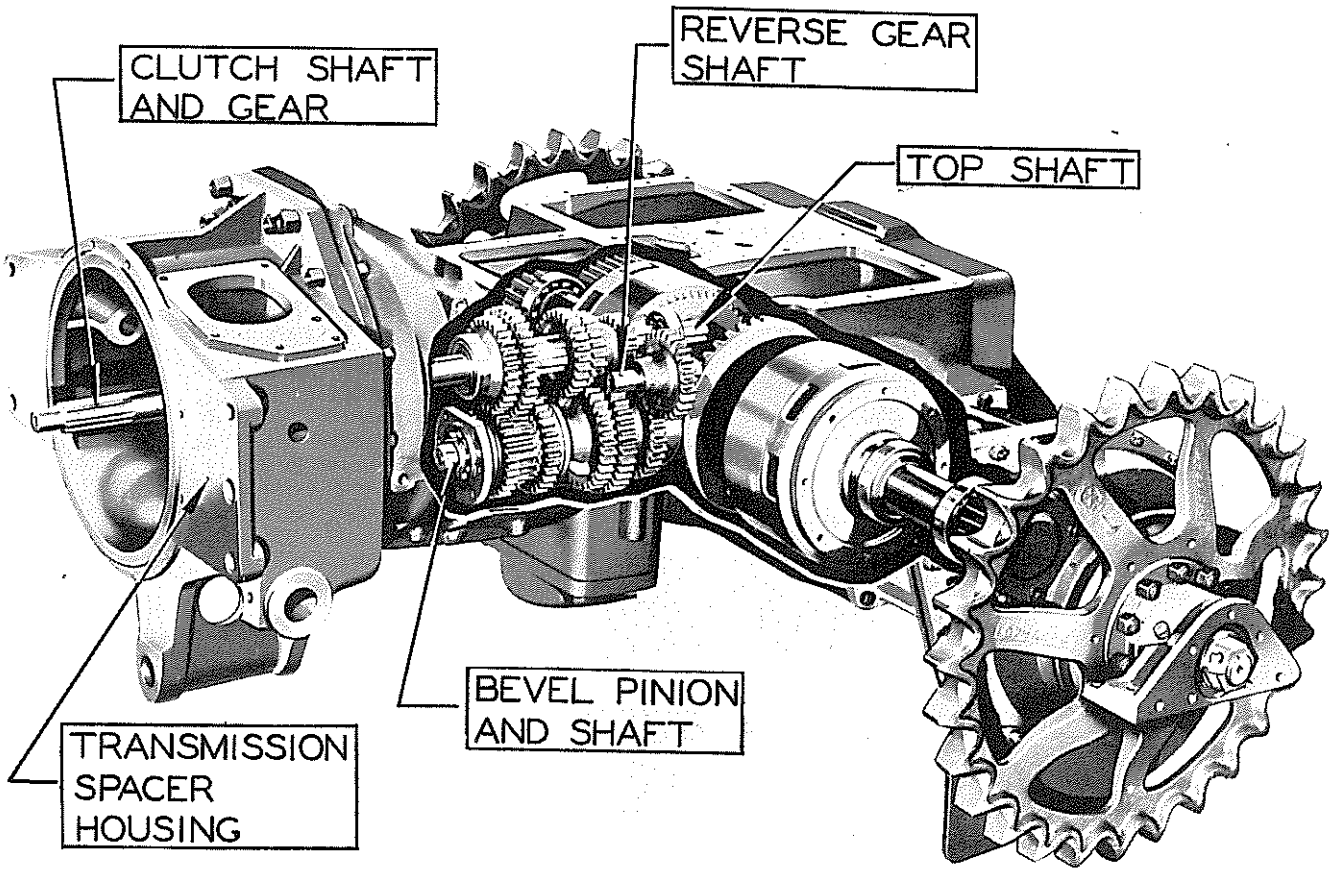

"HD 7" TRANSMISSION AND STEERING CLUTCH

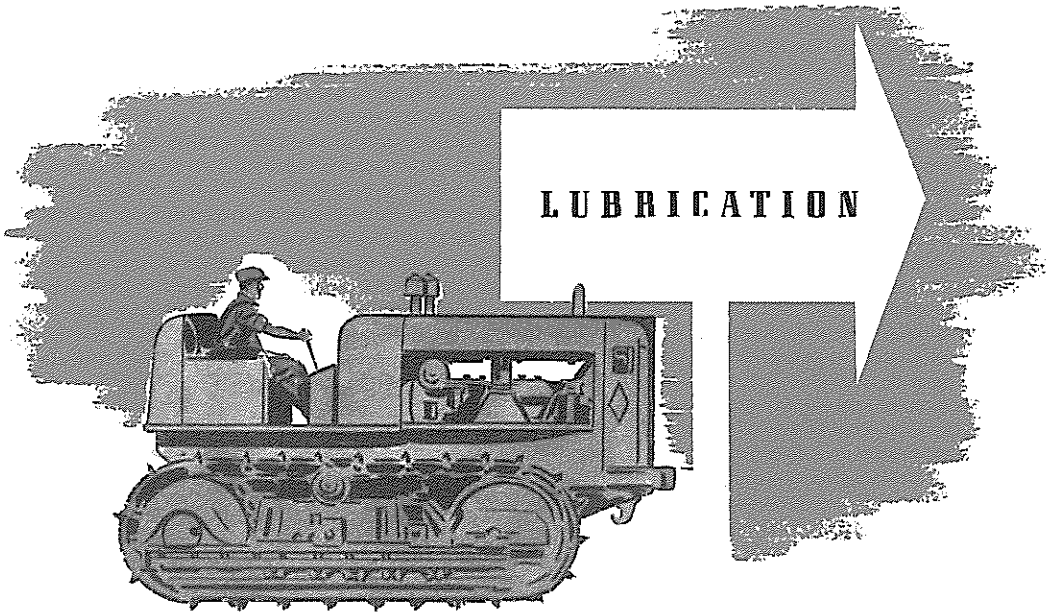

SAFETY:
While you are doing your daily job, think always of your safety and the safety of your fellow workers.

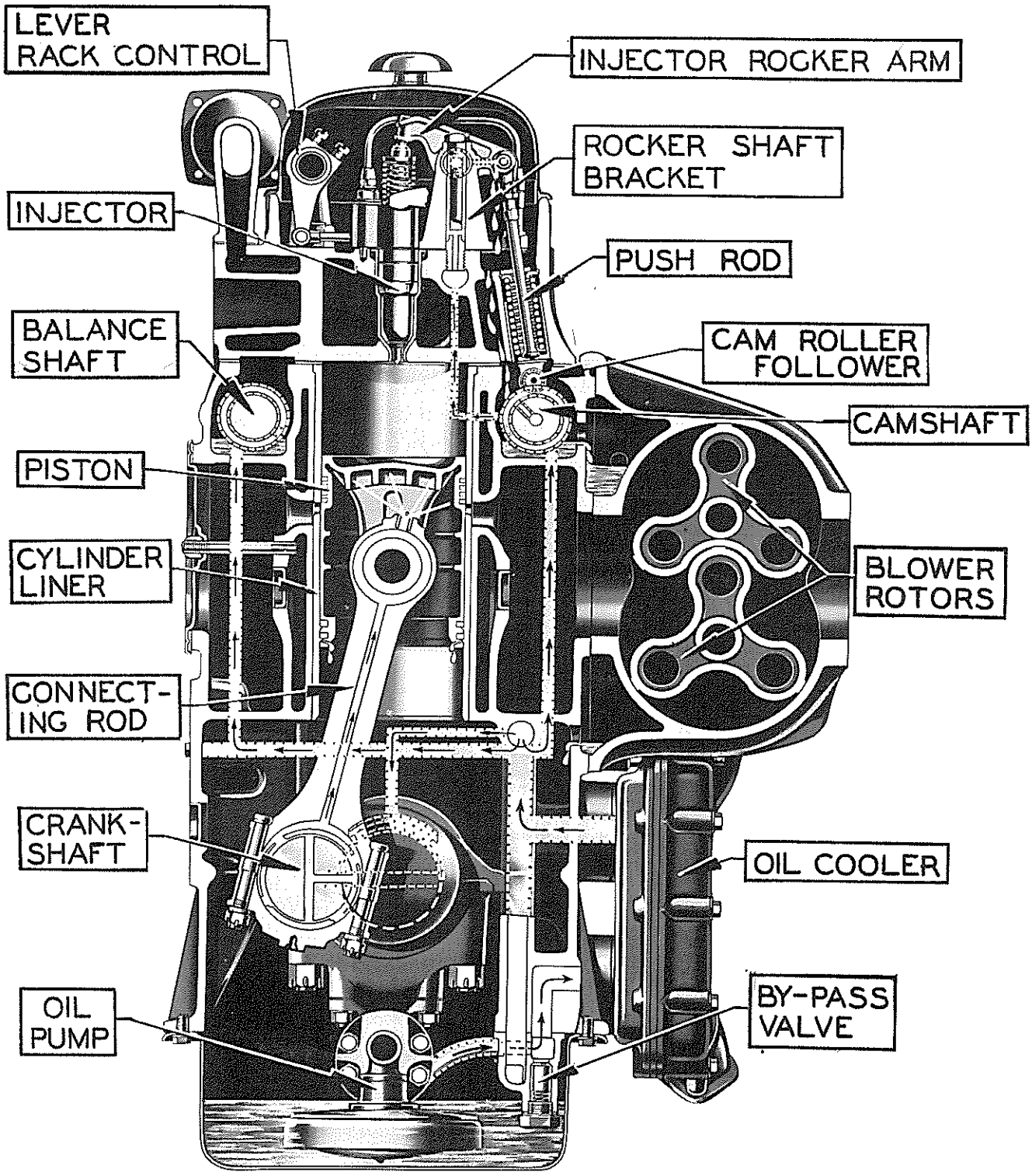

CROSS SECTION OF ENGINE, SHOWING LUBRICATION

1 -- Specifications of Lubricants

A. Engine Crankcase Lubricant:

USE NON-CORROSIVE HEAVY DUTY DIESEL ENGINE LUBRICATING OIL CONTAINING ADDITIVES WHICH WILL PREVENT SLUDGE OR GUM DEPOSITS. UNDER NO CIRCUMSTANCES SHOULD A CORROSIVE DIESEL ENGINE LUBRICATING OIL EVER BE USED.

Atmospheric Temperature	Viscosity
Above 32° F.	Use SAE 30
0° F. to 32° F.	Use SAE 20 W
0° F. and below	Use SAE 10 W

Manufacturers of lubricants recognize the importance of the qualities required for use in our equipment and they are cooperating fully to insure the use of only those oils which fulfill these requirements. The oil distributor and oil manufacturer are to be held responsible for the results obtained from their products.

The outstanding lubricating requirements for efficient operation of this engine are: The maintaining of piston rings in a clean, free condition; absence of hard carbon and "varnish" deposits on or within engine parts; the prevention of bearing corrosion and the promotion of general cleanliness within the engine.

Proper operation and maintenance of the engine is necessary to obtain the desired results from the lubricating oil. Operating and maintenance factors can be effectively controlled by the engine user.

B. Transmission and Final Drive Lubricant:

Lubricate these assemblies with motor oil. A list of the various brands of motor oils which have been tested and approved for use in these assemblies is shipped with each tractor and is also available from Allis-Chalmers dealers. Use only an oil shown on this list, as the use of untested oils may result in deterioration of the Neoprene boots and rings in these assemblies.

Use oils with the following viscosity:

Atmospheric Temperature	Viscosity
Above 32° F.	Use SAE 50
32° F. and Below	Use SAE 30

A revised list of approved oils and greases is issued every six months. New oils and greases which have been tested and approved during each period are added to the list. Ask your nearest Allis-Chalmers factory branch or authorized dealer for latest list.

C. Truck Wheel, Track Idler and Track Support Roller Lubricant:

Lubricate these assemblies with a grease that has been tested and approved by Allis-Chalmers Mfg. Co.

The type of grease used for lubricating these assemblies was selected because of its good pumpability and cold temperature characteristics and because of its having a minimum effect on the synthetic rubber seal boots. It is also an extremely stable grease and will not deteriorate excessively with long use.

Ask your nearest Allis-Chalmers factory branch or authorized dealer for the latest list of greases that have been found satisfactory.

D. Pressure Gun Lubricant:

Use a pressure gun lubricant with a minimum melting point of 300° F. This lubricant should be in a viscosity range so as to insure easy handling in the pressure gun at prevailing air temperature.

NOTE: In selecting the pressure gun lubricant make certain that it will not wash away in presence of water.

1E -- Specifications of Fuel Oil

Use No. 1 or No. 2 Diesel Fuel Oil purchased from a reputable oil company. This fuel must be within the classification limits as established by the American Society for Testing Materials.

For longer engine life and better performance, fuel oil requirements must comply with four basic qualifications.

1. Physical cleanliness
2. Absence of chemical contamination
3. Proper burning characteristics

4. Cold starting ability

Physical cleanliness means freedom from water, dirt and other incombustible ingredients. Since all present day high-speed engine fuels are completely distilled, they leave the refinery in clean condition. Transport and subsequent storage account for the addition of most foreign matter found in the fuel.

Of the chemical contamination, the most objectionable are free sulphur and gum, which, even in relatively small quantities, are largely responsible for harmful internal engine deposits. The fuel must also be free from alkali and mineral acids.

Proper burning characteristics are dependent upon ignition quality and volatility.

The ignition quality of a fuel is indicated by cetane numbers. Fuels with a low cetane number will not ignite as readily as fuels having a high cetane number. Use fuel with a cetane number of at least 40. For winter use, fuels with a higher cetane number are conducive to easier starting and shorter ignition delay.

Volatility is determined by the boiling temperature range. Fuels having a low final boiling point will vaporize and burn more completely than fuels with a high final boiling point.

The preferred high speed diesel fuels range in color from white to light amber.

2 -- Routine Service

The operating life of a tractor can be materially lengthened and fewer shut downs will be experienced if the unit is properly serviced at regular intervals. Often major repairs and shut downs can be avoided if the tractor is inspected regularly and any difficulties corrected when it is of a minor nature.

The following outline gives the operator the points that should be lubricated and inspected at each inspection period.

Ten (10) Hour Service

Lubricate:
- All Button Head Fittings—(Stabilizers Crank Assembly)
  - (a) Stabilizer Link
  - (b) Stabilizer Link Shaft
  - (c) Stabilizer Crank Support
- Bell Crank Thrust Pin ("HD 10" & "HD 14")
- Master Clutch Shifter Bearing
- Steering Clutch Release Bearings

Inspect:
- Crankcase Oil Level
- Air Cleaners
- Pre-Cleaners
- Cooling System
- Fuel Sediment Trap
- Batteries
- Transmission Case Oil Level
- Fuel Tank
- Final Drive Case Oil Level
- Inspect Tractor for Loose Nuts and Bolts
- Steering Clutch Throwout Adjustment
- Master Clutch Adjustment
- Brake Adjustment
- Front Idler and Track Adjustment

Sixty (60) Hour Service

Drain and refill crankcase. The oil should be changed every 30 to 60 hours, depending upon the quality of oil, the kind of fuel used and the working conditions.

Clean primary lubricating oil filter.

Install a new element in the secondary filter with every fourth oil change or every 240 hours.

One Hundred (100) Hour Service

Inspect:
- Generator Belt
- Fan Belts
- Wire Insulation and Connections
- Track Shoe Bolts
- Final Drive Packing Adjustments ("HD 14" only)

Lubricate:
- Brake Floating Bell Crank ("HD 10" only)

Two Hundred (200) Hour Service

Lubricate:
- Truck Wheels
- Front Idlers
- Track Support Rollers

} See 1000 HOUR SERVICE

- Fan
- Generator
- Starter
- Track Release Spring Mechanism
- Master Clutch Cams (HD-10 and HD-14)
- Drain, flush and refill cooling system.

Drain, flush, and refill final drive cases. The oil in the final drive cases should be changed every 200 to 400 hours of operation, depending upon the operating conditions.

One Thousand (1000) Hour Service

Lubricate:
- Truck Wheels
- Front Idlers
- Track Support Rollers

These assemblies on tractors Serial Number HD-7 #12566, HD-10 #6163 and HD-14 #5614 and later are lubricated with grease and should be lubricated after every 1000 hours of operation.

These assemblies on tractors prior to Serial Number HD-7 #12566, HD-10 #6163, and HD-14 #5614 are lubricated with oil and should be lubricated after every 200 hours of operation. NOTE: These assemblies may be grease-packed if desired and then serviced after every 1000 hours of operation. (Refer to Topics 6, 7, and 8.)

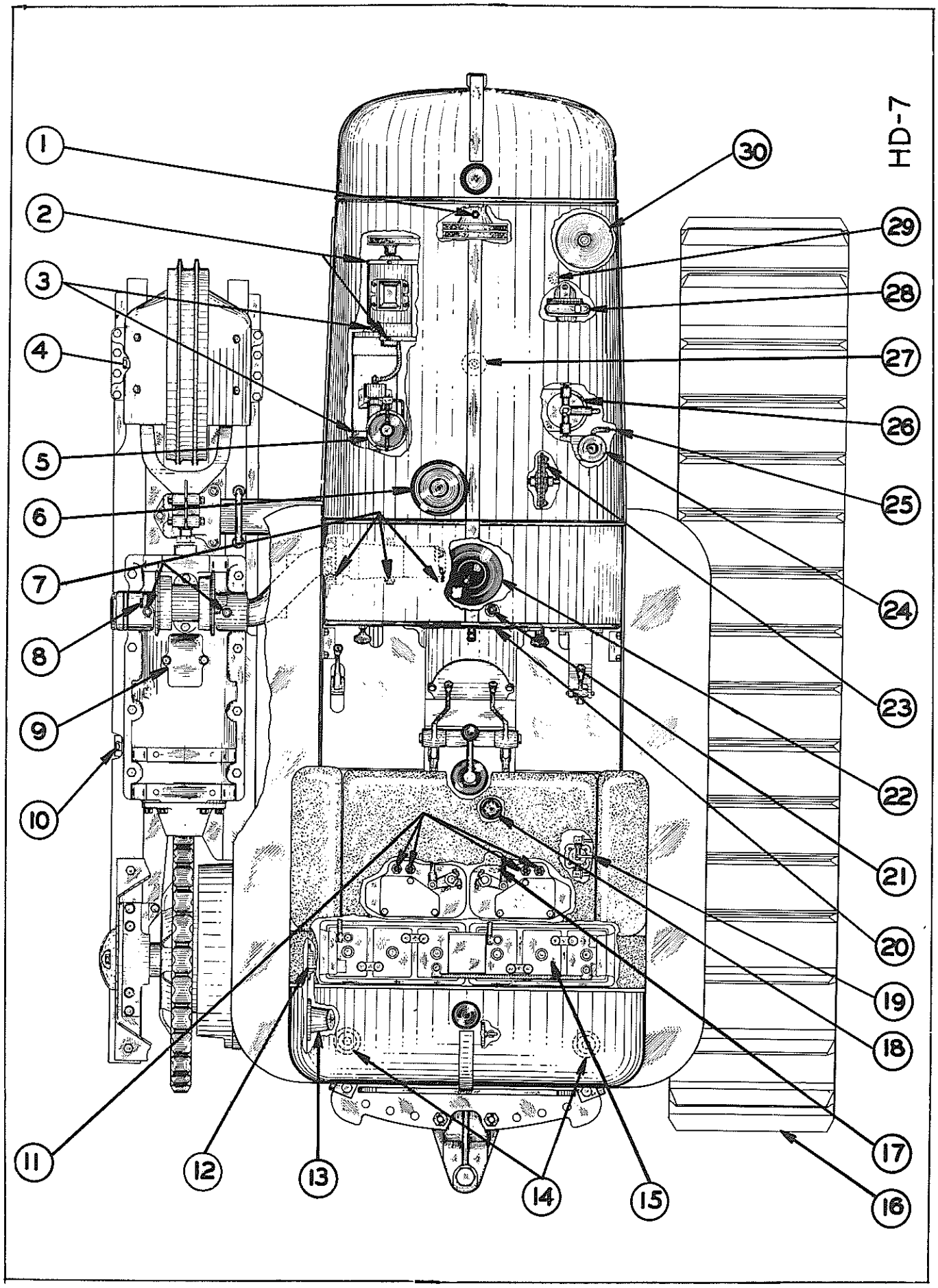
HD-7
1
2
3
4
5
6
7
8
9
10
11
12
13
14
15
16
17
18
19
20
21
22
23
24
25
26
27
28
29
30

3 -- "HD 7" Lubrication and Service Chart

1. FAN—One Lubrication point—Lubricate every 200 hours of operation with pressure gun lubricant.
2. GENERATOR—Two lubrication points—Lubricate every 200 hours of operation with light motor oil.
3. STARTER — Two lubrication points — Lubricate every 200 hours of operation with light motor oil.
4. FRONT IDLERS—Two lubrication points (one on each side of tractor).
   GREASE LUBRICATED IDLERS (On tractors, Serial Number 12566 and later). Lubricate every 1000 hours of operation. Using lubricating gun, pump grease in SLOWLY until clean grease can be seen coming out along the outside of the grease gun nozzle. Use an approved grease. Refer to Topic 7.
   OIL LUBRICATED IDLERS (On tractors, prior to Serial Number 12566). Lubricate every 200 hours of operation with 5 strokes of the gun. Use an approved motor oil. Refer to Topic 7.
5. SECONDARY OIL FILTER—Install a new element every 240 hours of operation or every 4th change of oil. Refer to Topic 10C.
6. PRE-CLEANER—Inspect and service every 10 hours of operation. Refer to Topic 12.
7. STABILIZER CRANK ASSEMBLY—Ten lubrication points. Lubricate every 10 hours of operation with pressure gun lubricant.
8. TRACK SUPPORT ROLLERS—Two Lubrication points (one on each side of tractor).
   GREASE LUBRICATED ROLLERS (On tractors, Serial Number 12566 and later). Lubricate every 1000 hours of operation. Using lubricating gun, pump grease in SLOWLY until clean grease can be seen coming out along the outside of the grease gun nozzle. Use an approved grease. Refer to Topic 8.
   OIL LUBRICATED ROLLERS (On tractors prior to Serial Number 12566). Lubricate every 200 hours of operation with 3½ strokes of the gun. Use an approved motor oil. Refer to Topic 8.
9. TRACK RELEASE SPRING MECHANISM—Inspect oil level every 200 hours of operation. Keep filled to filler plug with motor oil same viscosity as used in transmission. Drain, flush and refill with motor oil same viscosity as used in transmission every 800 hours of operation. Capacity 4 quarts.
10. TRUCK WHEELS—Ten lubrication points (five on each side of tractor).
    GREASE LUBRICATED WHEELS (On tractors, Serial Number 12566 and later). Lubricate every 1000 hours of operation. Using lubricating gun, pump grease in SLOWLY until clean grease can be seen coming out along the outside of the grease gun nozzle. Use an approved grease. Refer to Topic 6.
    OIL LUBRICATED WHEELS (On tractors prior to Serial Number 12566). Lubricate every 200 hours of operation with 4 strokes of the gun. Use an approved motor oil. Refer to Topic 6.
11. STEERING CLUTCH THROWOUT BEARING —Four lubrication points. Lubricate every ten hours of operation with pressure gun lubricant of high heat resistance.
12. FINAL DRIVE DRAIN PLUG—Drain, flush and refill every 200 to 400 hours of operation. Capacity 7 quarts each.
13. FINAL DRIVE FILLER PLUG—Inspect oil level every 10 hours of operation. Keep filled even with level plug with approved motor oil.
14. SEDIMENT TRAPS—Drain traps every morning before starting; more often if necessary. In freezing weather, drain after stopping, so water will not freeze in traps.
15. BATTERIES—Keep the tops and terminals clean. Keep filled with clean distilled water to ⅜" above separator plates; inspect water level daily. Test periodically with hydrometer.
16. TRACKS—Do not lubricate.
17. TRANSMISSION DRAIN PLUG—Drain, flush and refill every 800 hours of operation with approved motor oil. Capacity 26 quarts.
18. TRANSMISSION CASE FILLER PLUG AND OIL LEVEL BAYONET GAUGE—Inspect oil level every 10 hours of operation and keep the oil level between "Low" and "Full" on the bayonet gauge.
19. FIRST STAGE FUEL OIL FILTERS—Install element when necessary. Refer to Topic 11.
20. LUBRICATING OIL PRESSURE GAUGE—Normal operating pressure when the engine is warm and at full throttle, is 25 to 35 on the gauge; if gauge does not register, stop engine immediately and determine the cause.
21. MASTER CLUTCH SHIFTER BEARING — Lubricate every 10 hours of operation with pressure gun lubricant of high heat resistance.
22. AIR-CLEANER—Inspect and service every 10 hours of operation. Refer to Topic 13.
23. THROTTLE LEVER DISC—Lubricate when necessary for easy operation with pressure gun lubricant; do not over-lubricate.
24. CRANKCASE FILLER CAP—One filler point. Change oil every 30 to 60 hours of operation. USE A NON-CORROSIVE DIESEL LUBRICATING OIL CONTAINING ADDITIVES PREVENTING SLUDGE AND GUM DEPOSITS. Capacity 11 quarts.
25. CRANKCASE BAYONET GAUGE—Inspect oil level every 10 hours of operation.
26. SECOND STAGE FUEL OIL FILTER—Replace element when necessary, that is, when pressure drops below normal range — (25 to 65) due to filter clogging. Refer to Topic 11.
27. CRANKCASE DRAIN PLUG—One drain point. Drain and refill with new oil every 30 to 60 hours of operation. See Topic 1A. Capacity 11 quarts.
28. WATER PUMP DRAIN—Periodically drain and flush out system. Refer to Topic 18. Capacity 5¾ gallons.
29. RADIATOR DRAIN—Periodically drain and flush out system. Refer to Topic 18. Capacity 5¾ gallons.
30. PRIMARY OIL FILTER—Clean the oil filter element at each crankcase oil change. Refer to Topic 10.

"HD 7" LUBRICATION & SERVICE PICTURES

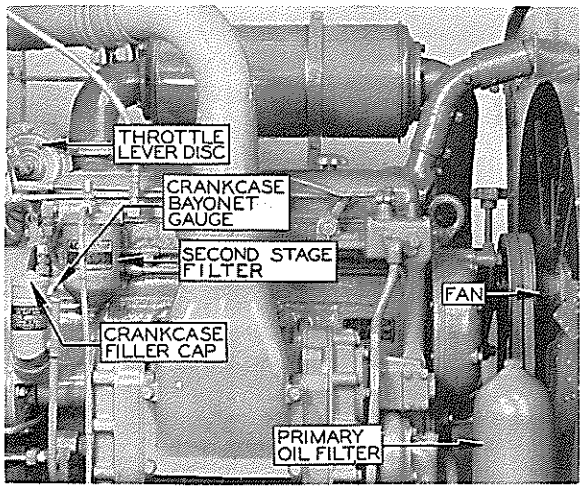

FIG. 1

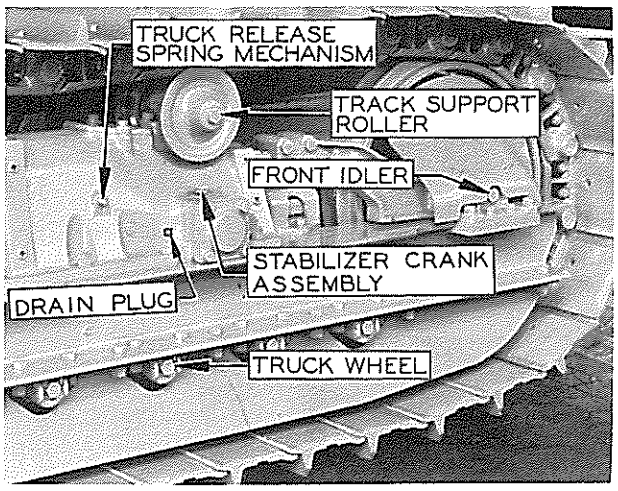

FIG. 4

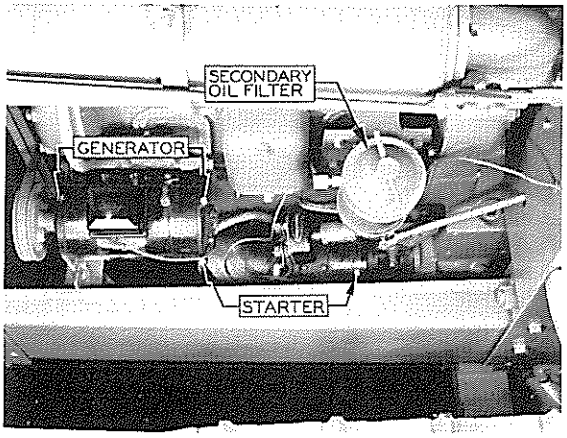

FIG. 2

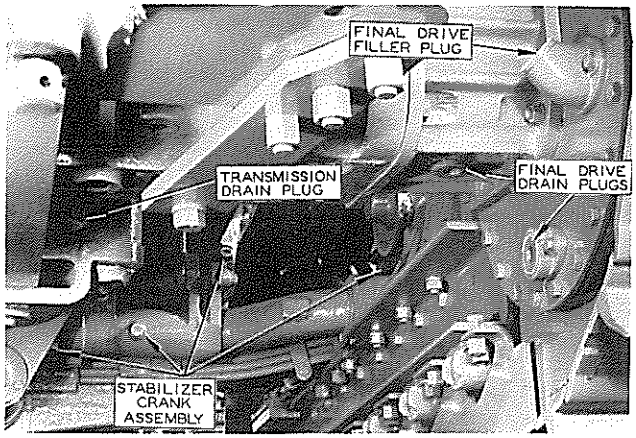

FIG. 5

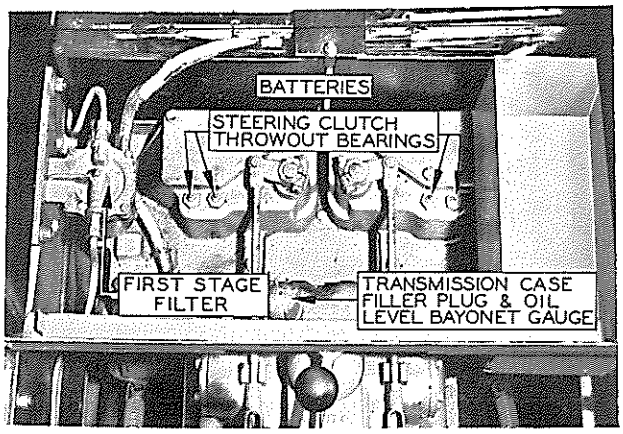

FIG. 3

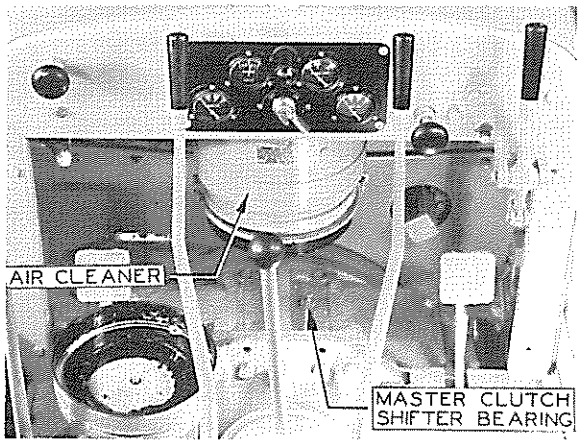

FIG. 6

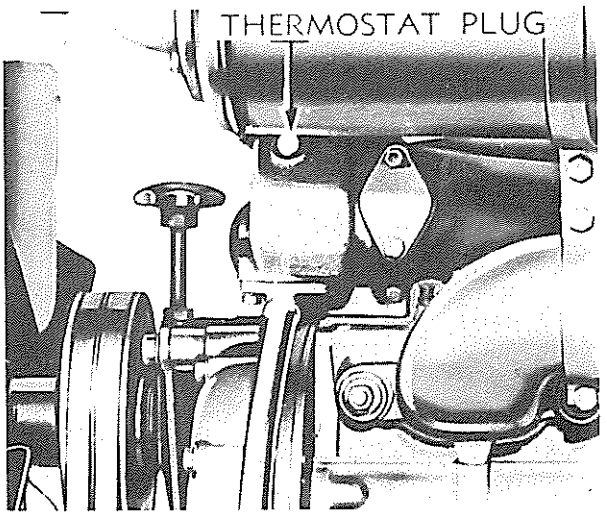

FIG. 7

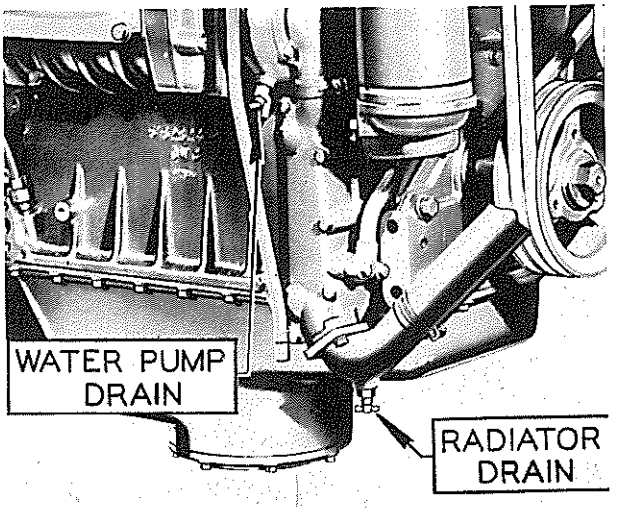

FIG. 9

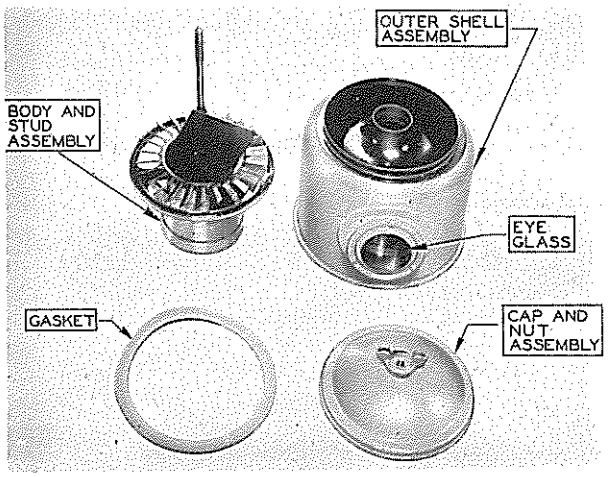

FIG. 8

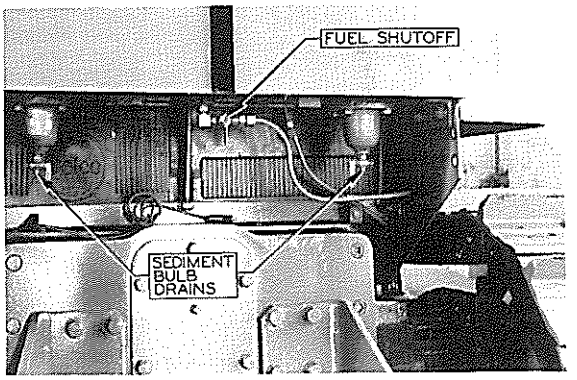

FIG. 10

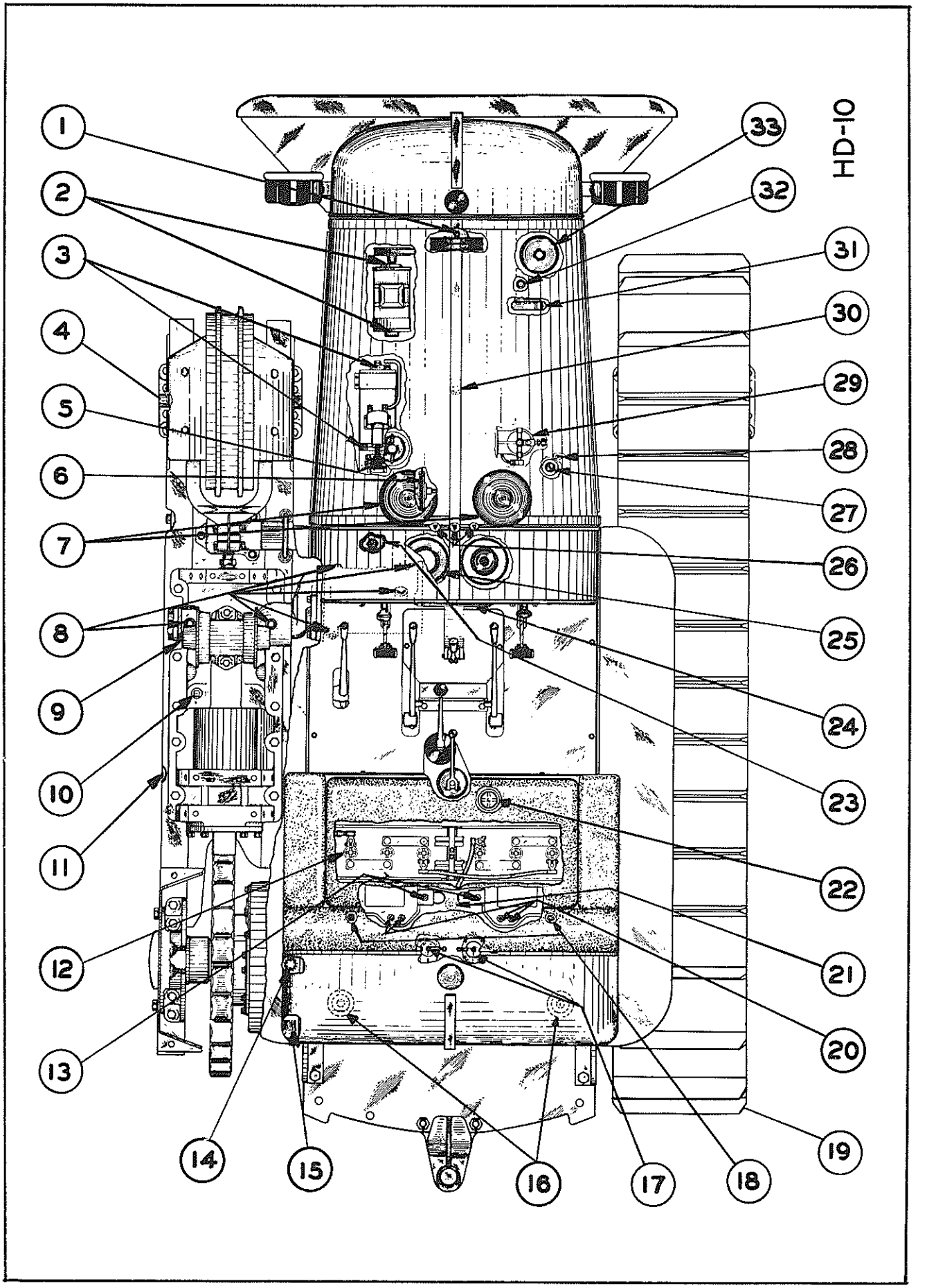
HD-10
1
2
3
4
5
6
7
8
9
10
11
12
13
14
15
16
17
18
19
20
21
22
23
24
25
26
27
28
29
30
31
32
33

4 -- "HD 10" Lubrication and Service Chart

1. FAN—One lubrication—Lubricate every 200 hours of operation with pressure gun lubricant.
2. GENERATOR—Two lubrication points—Lubricate every 200 hours of operation with light motor oil.
3. STARTER — Two lubrication points — Lubricate every 200 hours of operation with light motor oil.
4. FRONT IDLERS—Two lubrication points (one on each side of tractor).
   GREASE LUBRICATED IDLERS (On tractors, Serial Number 6163 and later). Lubricate every 1000 hours of operation. Using lubricating gun, pump grease in SLOWLY until clean grease can be seen coming out along the outside of the grease gun nozzle. Use an approved grease. Refer to Topic 7.
   OIL LUBRICATED IDLERS (On tractors, prior to Serial Number 6163). Lubricate every 200 hours of operation with 10 strokes of the gun. Use an approved motor oil. Refer to Topic 7.
5. SECONDARY OIL FILTER—Install a new element every 240 hours of operation or every 4th oil change. Refer to Topic 10.
6. THROTTLE LEVER DISC—Lubricate when necessary for easy operation with pressure gun lubricant; do not over-lubricate.
7. PRE-CLEANERS—Inspect and service every 10 hours of operation. Refer to Topic 12.
8. STABILIZER CRANK ASSEMBLY—Twelve lubrication points. Lubricate every 10 hours of operation with pressure gun lubricant.
9. TRACK SUPPORT ROLLERS—Two Lubrication points (one on each side of tractor).
   GREASE LUBRICATED ROLLERS (On tractors, Serial Number 6163 and later). Lubricate every 1000 hours of operation. Using lubricating gun, pump grease in SLOWLY until clean grease can be seen coming out along the outside of the grease gun nozzle. Use an approved grease. Refer to Topic 8.
   OIL LUBRICATED ROLLERS (On tractors prior to Serial Number 6163). Lubricate every 200 hours of operation with 8½ strokes of the gun. Use an approved motor oil. Refer to Topic 8.
10. TRACK RELEASE SPRING MECHANISM—Inspect oil level every 200 hours of operation. Keep filled to filler plug with motor oil same viscosity as used in transmission. Drain, flush and refill with motor oil same viscosity as used in transmission every 800 hours of operation. Capacity 7½ quarts.
11. TRUCK WHEELS—Twelve lubrication points (six on each side of tractor).
    GREASE LUBRICATED WHEELS (On tractors, Serial Number 6163 and later). Lubricate every 1000 hours of operation. Using lubricating gun, pump grease in SLOWLY until clean grease can be seen coming out along the outside of the grease gun nozzle. Use an approved grease. Refer to Topic 6.
    OIL LUBRICATED WHEELS (On tractors prior to Serial Number 6163). Lubricate every 200 hours of operation with 6 strokes of the gun. Use an approved motor oil. Refer to Topic 6.
12. BATTERIES—Keep the tops and terminals clean. Keep filled with clean distilled water to ⅜" above separator plates; inspect water level daily. Test periodically with hydrometer.
13. BELL CRANK PIVOT PIN—Two lubrication points. Lubricate every 10 hours of operation with pressure gun lubricant.
14. FINAL DRIVE DRAIN PLUG—Drain, flush and refill every 200 to 400 hours of operation with approved motor oil. Capacity 8 quarts each.
15. FINAL DRIVE FILLER PLUG—Inspect oil level every 10 hours of operation. Keep filled to level of filler plug with approved motor oil.
16. SEDIMENT TRAPS—Drain traps every morning before starting; more often if necessary. In freezing weather, drain after stopping so water will not freeze in traps.
17. FIRST STAGE FUEL OIL FILTERS—Install new element when necessary. Refer to Topic 11.
18. BRAKE FLOATING BELL CRANK—Two lubrication points. Lubricate moderately every 100 hours of operation with pressure gun lubricant.
19. TRACKS—Do not lubricate.
20. STEERING CLUTCH THROWOUT BEARING —Four lubrication points. Lubricate every 10 hours of operation with pressure gun lubricant of high heat resistance.
21. TRANSMISSION DRAIN PLUG—Drain, flush and refill every 800 hours of operation with approved motor oil. Capacity 24 quarts.
22. TRANSMISSION CASE FILLER PLUG AND OIL LEVEL BAYONET GAUGE—Inspect oil level every 10 hours of operation and keep the oil level between "Low" and "Full" on the bayonet gauge.
23. CLUTCH SHIFTER BEARING—Lubricate every 10 hours of operation with pressure gun lubricant of high heat resistance.
24. LUBRICATING OIL PRESSURE GAUGE—Normal operating pressure when engine is warm at full throttle is 25 to 35 on the gauge; if gauge does not register, stop engine immediately and determine the cause.
25. AIR CLEANERS—Inspect and service every 10 hours of operation. Refer to Topic 13.
26. MASTER CLUTCH CAMS — Three lubrication points. Use a high temperature lubricant and lubricate every 200 hours of operation; oftener if necessary for easy operation. Do not allow excess grease to get on clutch discs.
27. CRANKCASE FILLER CAP—One filler point. Change oil every 30 to 60 hours of operation. USE A NON-CORROSIVE DIESEL LUBRICATING OIL CONTAINING ADDITIVES PREVENTING SLUDGE OR GUM DEPOSITS. Capacity 13 quarts.
28. CRANKCASE BAYONET GAUGE—Inspct oil level every 10 hours of operation and keep between "Low" and "Full" marks on gauge.
29. SECOND STAGE FUEL OIL FILTER—Install new when necessary; that is, when pressure drops below normal range due to filter clogging. Refer to Topic 11.
30. CRANKCASE DRAIN PLUG—One drain point. Drain and refill with new oil every 30 to 60 hours of operation. Refer to Topic 1A.
31. WATER PUMP DRAIN—Periodically drain and flush out system. Refer to Topic 18.
32. RADIATOR DRAIN—Periodically drain and flush out system. Refer to Topic 18. Capacity 9¾ gallons.
33. PRIMARY OIL FILTER—Clean the primary oil filter element at each crankcase oil change. Refer to Topic 10.

"HD 10" LUBRICATION & SERVICE PICTURES

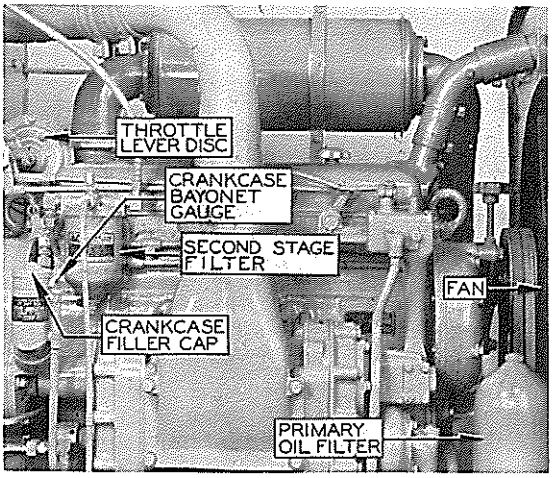

FIG. 1

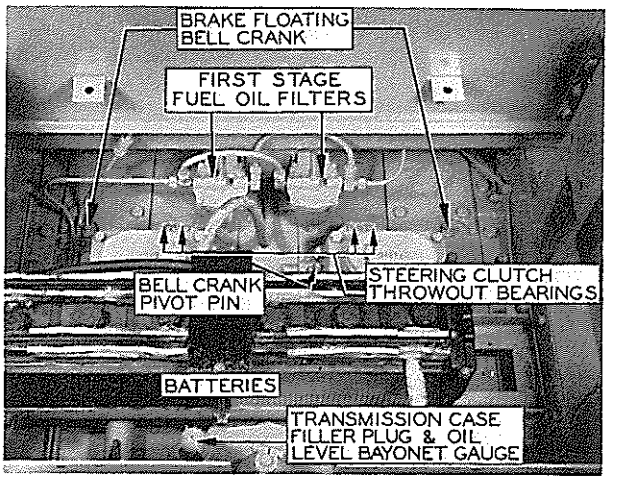

FIG. 4

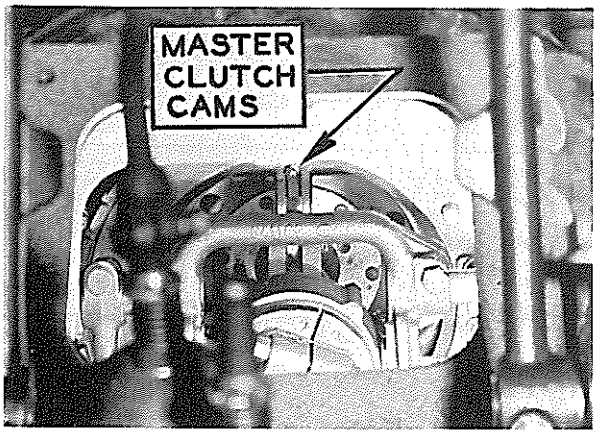

FIG. 2

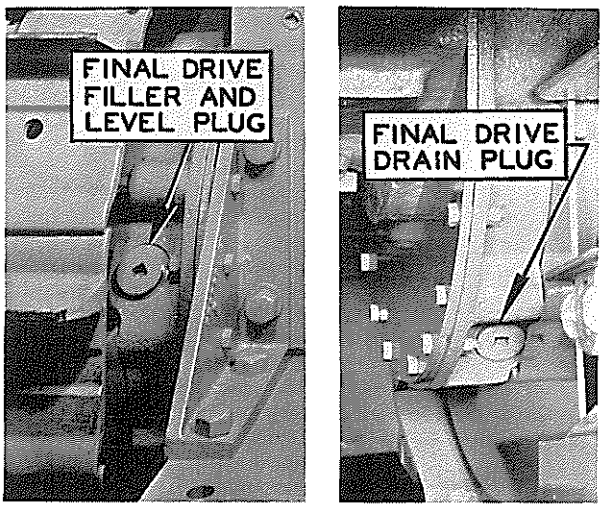

FIG. 5

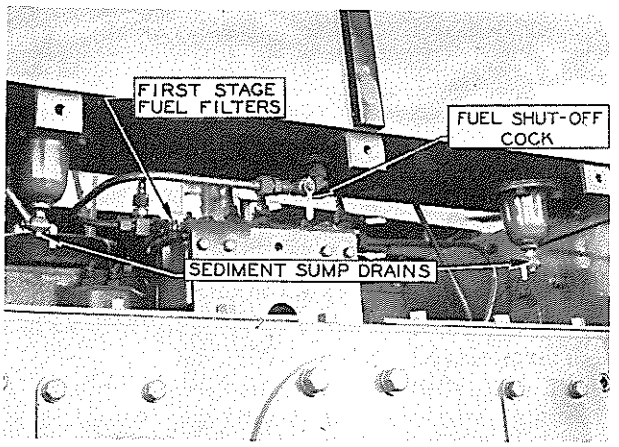

FIG. 3

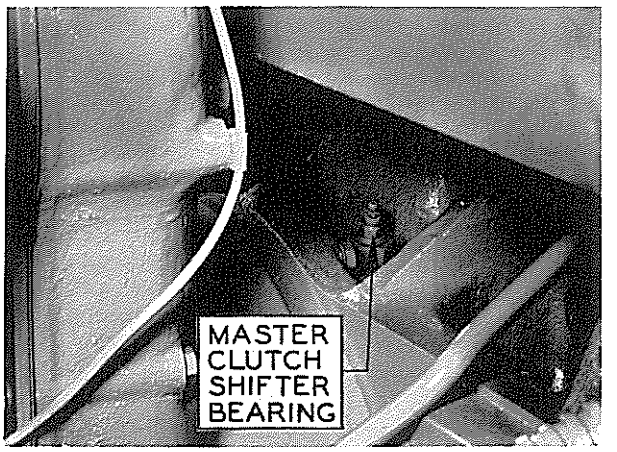

FIG. 6

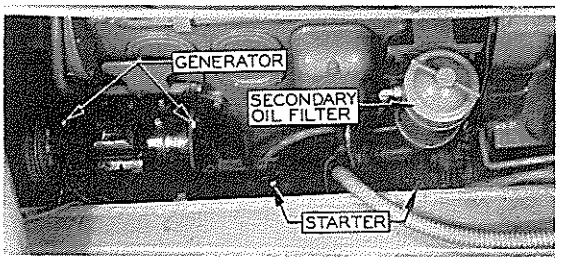

FIG. 7

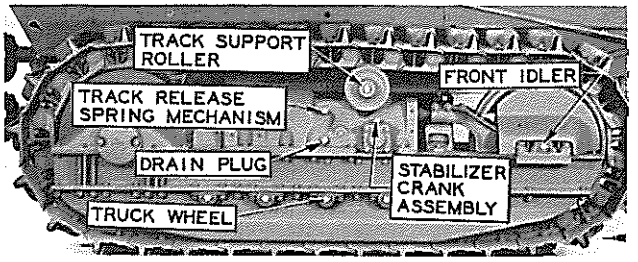

FIG. 10

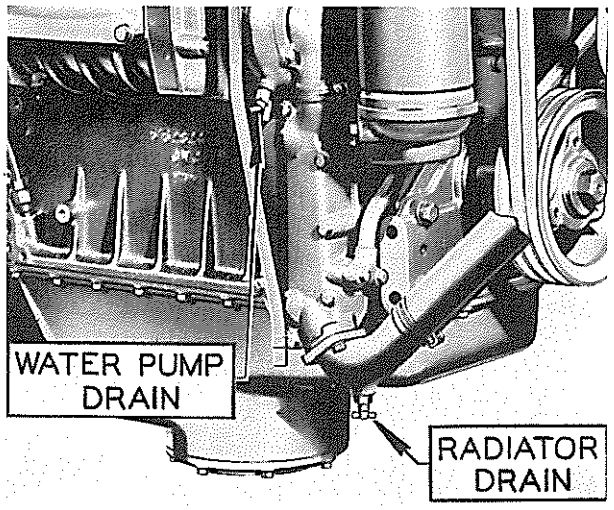

FIG. 8

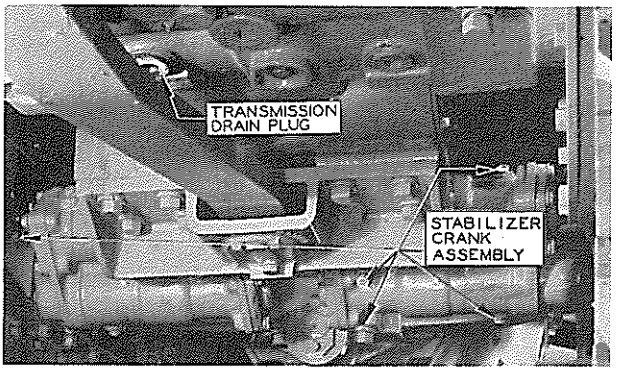

FIG. 11

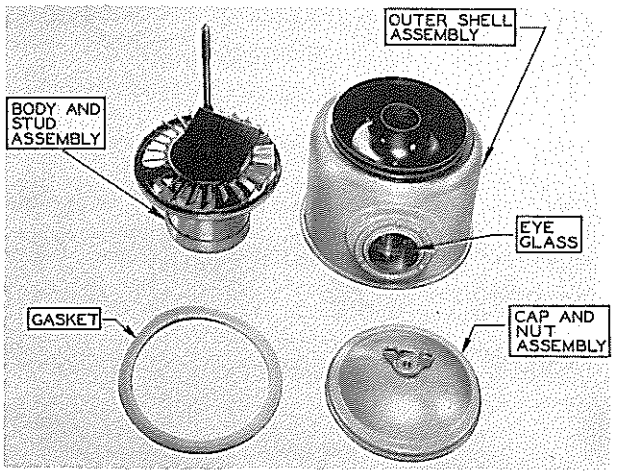

FIG. 12

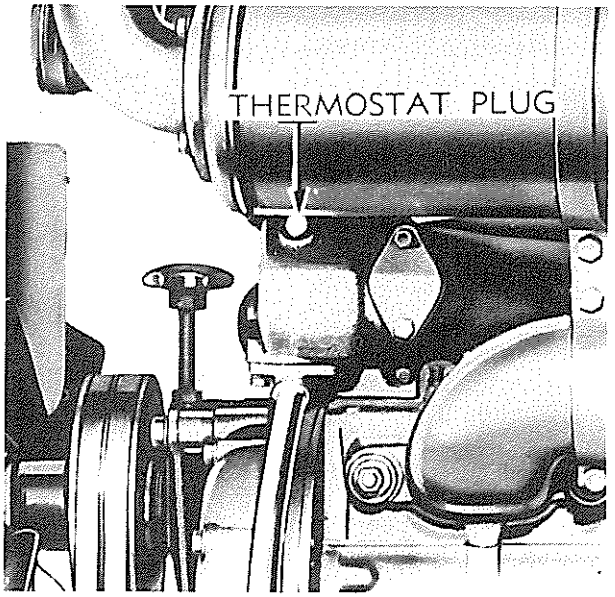

FIG. 9

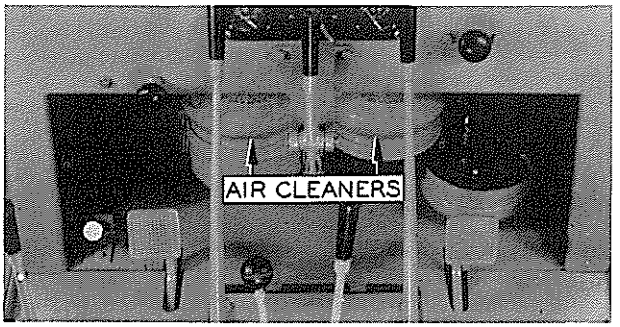

FIG. 13

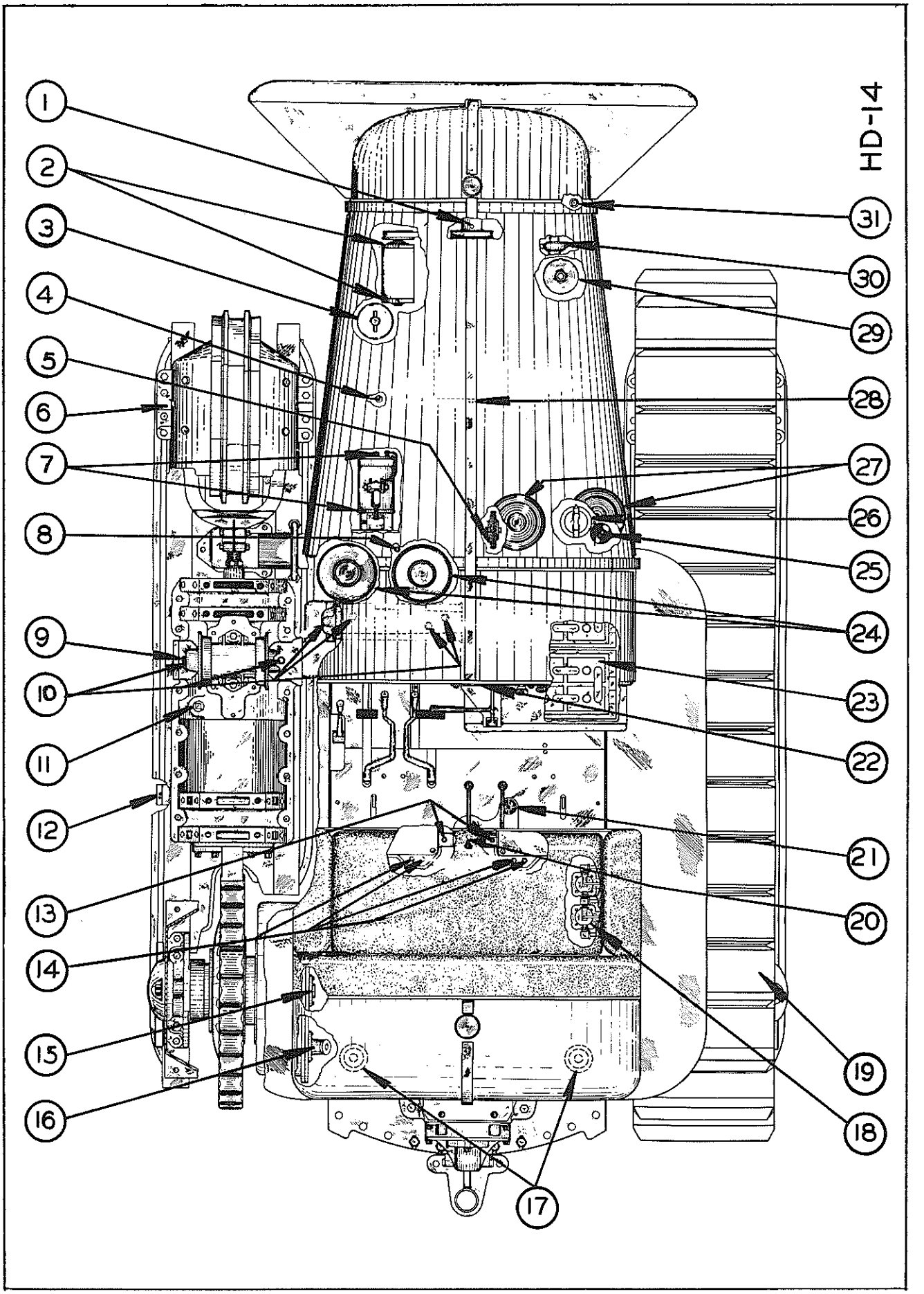
HD-14
1
2
3
4
5
6
7
8
9
10
11
12
13
14
15
16
17
18
19
20
21
22
23
24
25
26
27
28
29
30
31

5 -- "HD 14" Lubrication and Service Chart

1. FAN—One lubrication point—Lubricate every 200 hours of operation with pressure gun lubricant.
2. GENERATOR—Two lubrication points—Lubricate every 200 hours of operation with light motor oil.
3. SECONDARY OIL FILTER—Install a new element in the secondary filter every 240 hours of operation or every 4th oil change. Refer to Topic 10.
4. CRANKCASE BAYONET GAUGE—Inspect oil level every 10 hours of operation.
5. THROTTLE LEVER DISC — Lubricate when necessary for easy operation with pressure gun lubricant; do not over-lubricate.
6. FRONT IDLERS—Two lubrication points (one on each side of tractor).
   GREASE LUBRICATED IDLERS (On tractors, Serial Number 5614 and later). Lubricate every 1000 hours of operation. Using lubricating gun, pump grease in SLOWLY until clean grease can be seen coming out along the outside of the grease gun nozzle. Use an approved grease. Refer to Topic 7.
   OIL LUBRICATED IDLERS (On tractors, prior to Serial Number 5614). Lubricate every 200 hours of operation with 18 strokes of the gun. Use an approved motor oil. Refer to Topic 7.
7. STARTER — Two lubrication points — Lubricate every 200 hours of operation with light motor oil.
8. CLUTCH SHIFTER BEARING—Lubricate every 10 hours of operation with pressure gun lubricant of high heat resistance.
9. TRACK SUPPORT ROLLERS—Two Lubrication points (one on each side of tractor).
   GREASE LUBRICATED ROLLERS (On tractors, Serial Number 5614 and later). Lubricate every 1000 hours of operation. Using lubricating gun, pump grease in SLOWLY until clean grease can be seen coming out along the outside of the grease gun nozzle. Use an approved grease. Refer to Topic 8.
   OIL LUBRICATED ROLLERS (On tractors prior to Serial Number 5614). Lubricate every 200 hours of operation with 10 strokes of the gun. Use an approved motor oil. Refer to Topic 8.
10. STABILIZER CRANK ASSEMBLY—Twelve lubrication points—Lubricate every 10 hours of operation with pressure gun lubricant.
11. TRACK RELEASE SPRING MECHANISM—Inspect oil level every 200 working hours. Keep filled to filler plug with motor oil same viscosity as used in transmission. Drain, flush and refill with motor oil same viscosity as used in transmission every 800 working hours. Capacity 13 quarts.
12. TRUCK WHEELS—Ten lubrication points (five on each side of tractor).
    GREASE LUBRICATED WHEELS (On tractors, Serial Number 5614 and later). Lubricate every 1000 hours of operation. Using lubricating gun, pump grease in SLOWLY until clean grease can be seen coming out along the outside of the grease gun nozzle. Use an approved grease. Refer to Topic 6.
    OIL LUBRICATED WHEELS (On tractors prior to Serial Number 5614). Lubricate every 200 hours of operation with 8½ strokes of the gun. Use an approved motor oil. Refer to Topic 6.
13. BELL CRANK THRUST PIN—Two lubrication points—Lubricate every 10 hours of operation with pressure gun lubricant.
14. STEERING CLUTCH THROWOUT BEARING —Four lubrication points—Lubricate every 10 hours of operation with pressure gun lubricant of high heat resistance.
15. FINAL DRIVE DRAIN PLUG—Drain flush, and refill every 200 to 400 hours of operation. Capcity 8 quarts each.
16. FINAL DRIVE FILLER PLUG—Inspect oil level every 10 hours of operation. Keep filled to level of filler elbow with approved motor oil.
17. SEDIMENT TRAPS—Drain traps every morning before starting, or more often if necessary. In freezing weather, drain after stopping so water will not freeze in traps.
18. FIRST STAGE FUEL OIL FILTERS—Install new elements when necessary. Refer to Topic 11.
19. TRACKS—No lubrication necessary.
20. TRANSMISSION DRAIN PLUG—Drain, flush, and refill every 800 hours of operation with approved motor oil. Capacity 40 quarts.
21. TRANSMISSION CASE FILLER PLUG AND OIL LEVEL BAYONET GAUGE—Inspect oil level every 10 hours of operation and keep the oil level between "Low" and "Full" on the bayonet gauge.
22. LUBRICATING OIL PRESSURE GAUGE— —Normal operating pressure when engine is warm at full throttle is 25 to 35 on the gauge; if gauge does not register stop engine immediately and determine the cause.
23. BATTERIES—Keep the top and terminals clean. Keep filled with clean distilled water to ⅜" above separator plates; inspect water level daily. Test with a hydrometer.
24. AIR CLEANERS—Inspect and service every 10 hours of operation. Refer to Topic 13.
25. CRANKCASE FILLER CAP—One filler point. Change oil every 30 to 60 hours of operation. USE NON-CORROSIVE DIESEL LUBRICATING OILS CONTAINING ADDITIVES, PREVENTING SLUDGE OR GUM DEPOSITS. Capacity 14 quarts.
26. SECOND STAGE FUEL OIL FILTER—Install new element when necessary, that is, when pressure drops below normal range (25 to 65) due to filter clogging. Refer to Topic 11.
27. PRE-CLEANERS—Inspect and service every 10 hours of operation. Refer to Topic 12.
28. CRANKCASE DRAIN PLUG—One drain point. Drain and refill with new oil every 30 to 60 hours of operation. Refer to Topic 1A.
29. PRIMARY OIL FILTER—Clean the Primary oil Filter at each crankcase oil change. Refer to Topic 10.
30. WATER PUMP DRAIN—Periodically drain and flush out system. Refer to Topic 18.
31. RADIATOR DRAIN—Periodically drain and flush out system. Refer to Topic 18. Capacity 12 gallons.

"HD 14" LUBRICATION & SERVICE PICTURES

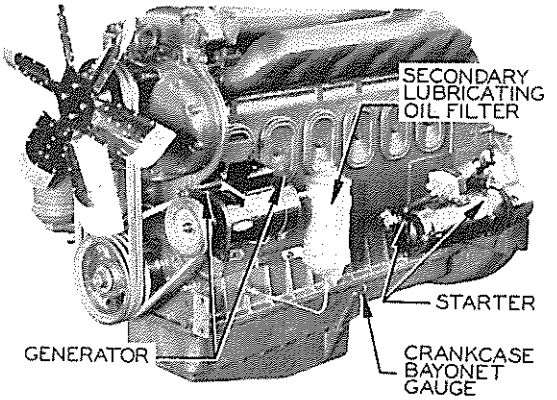

FIG. 1

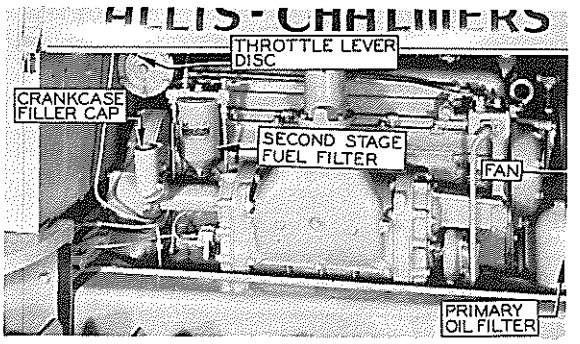

FIG. 2

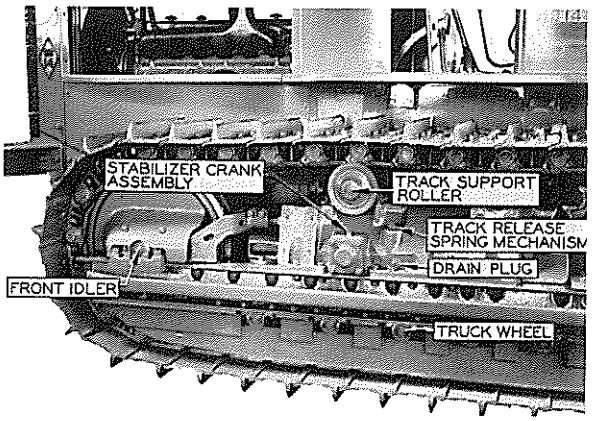

FIG. 3

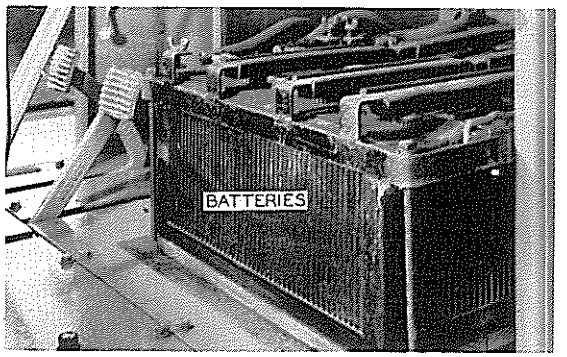

FIG. 4

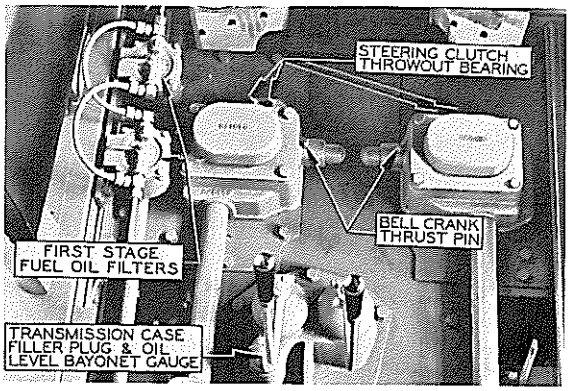

FIG. 5

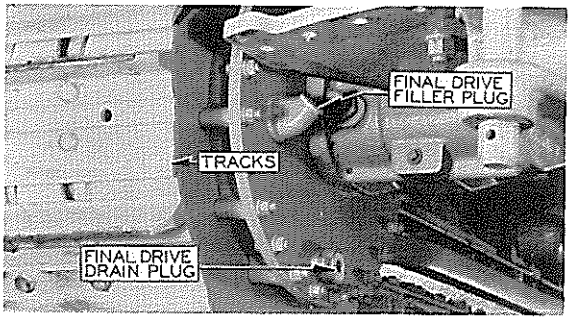

FIG. 6

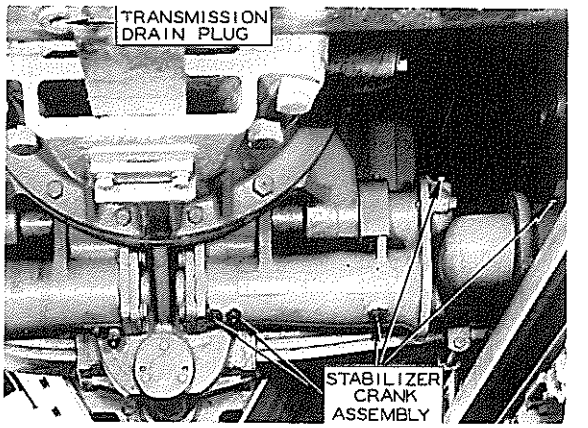

FIG. 7

FIG. 8

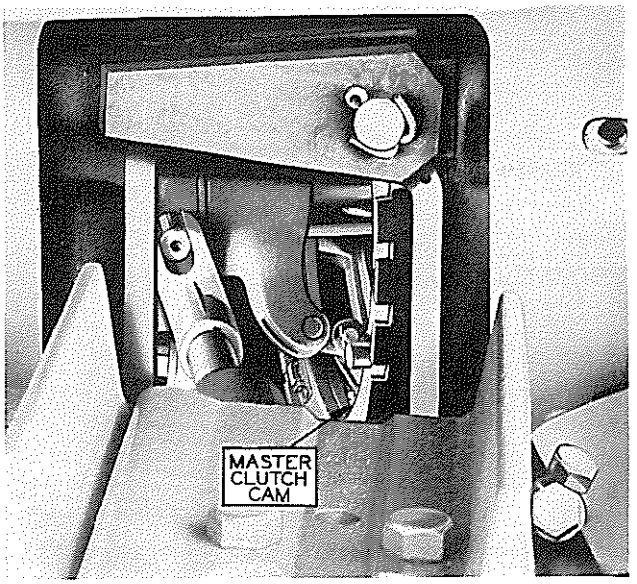

FIG. 9

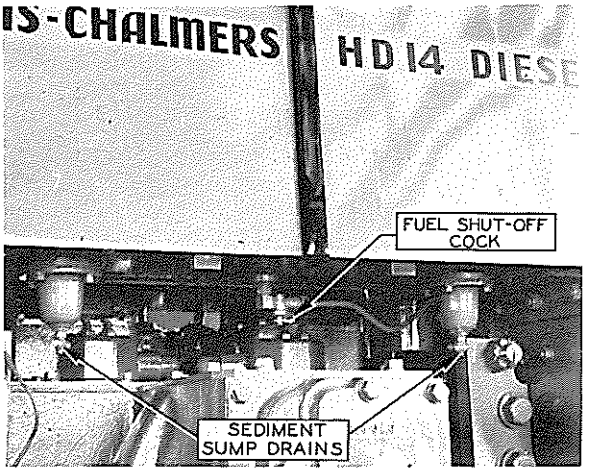

FIG. 11

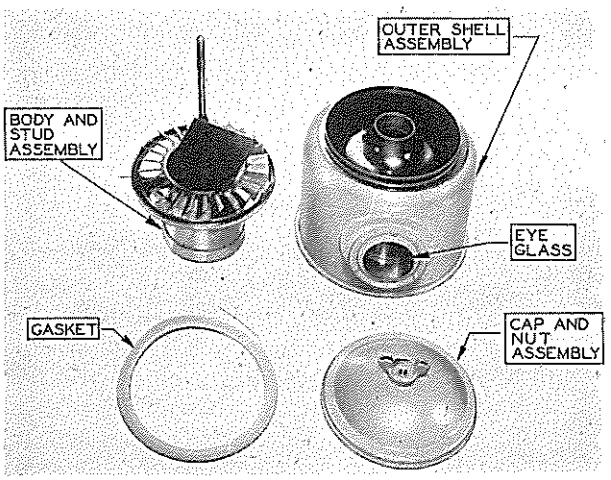

FIG. 10

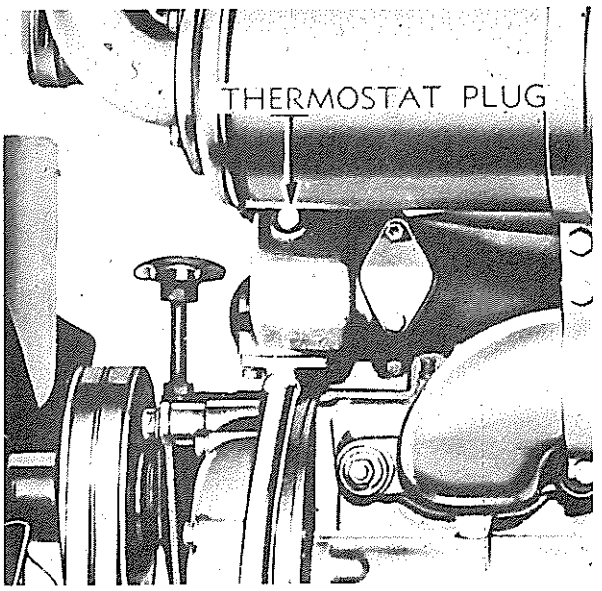

FIG. 12

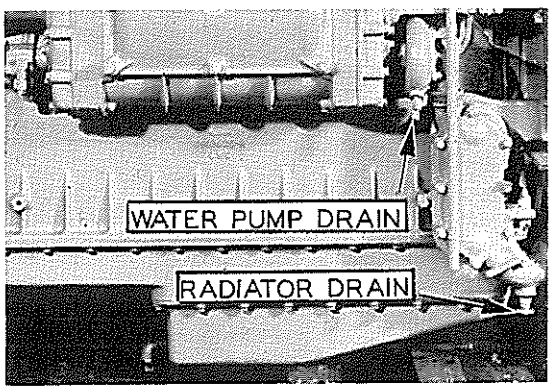

FIG. 13

6 -- Truck Wheel Lubrication

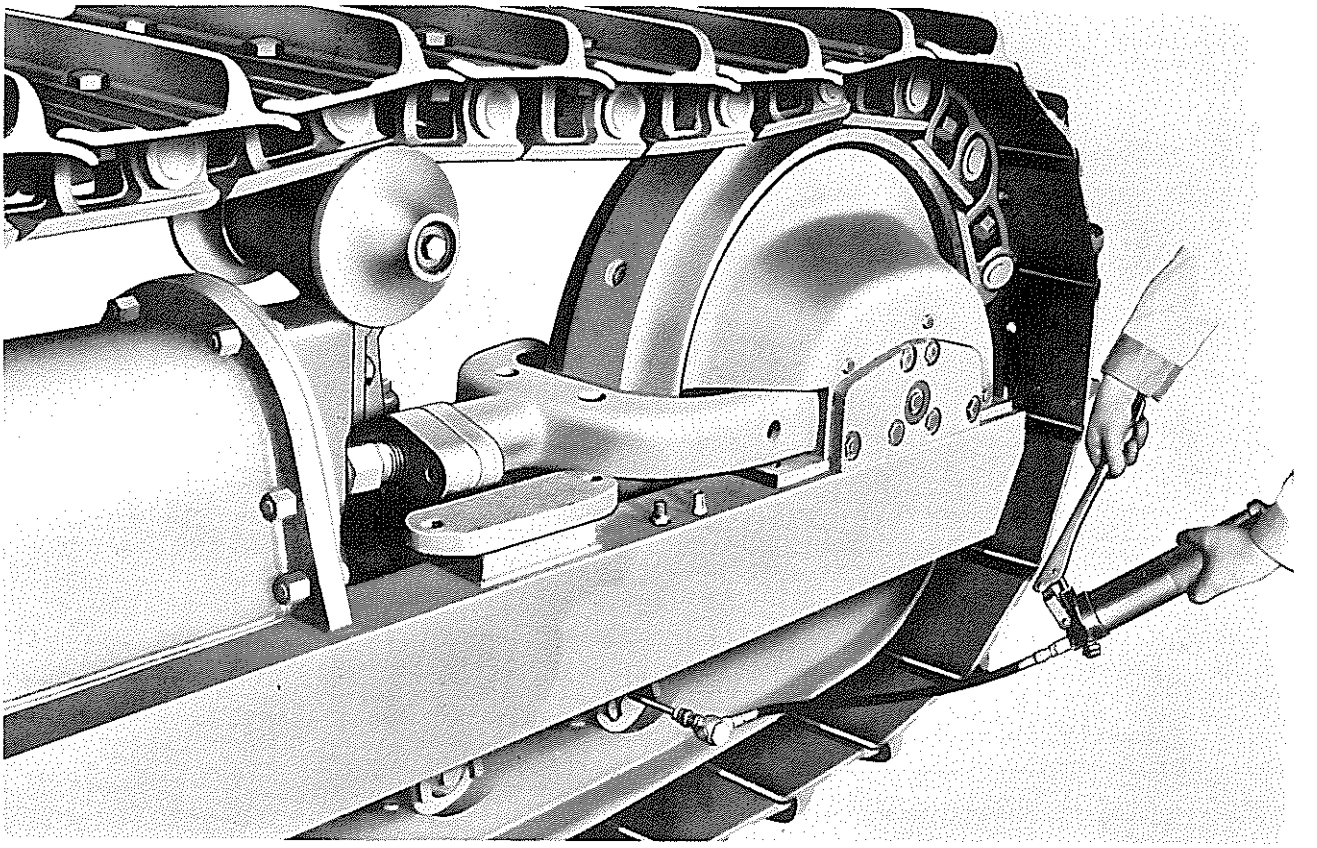

FIG. 1

Servicing Grease Truck Wheels

A. GREASE PACKED TRUCK WHEELS

(On tractors HD-7 #12566, HD-10 #6163, and HD-14 #5614 and later.) The truck wheels, which employ the use of positive seals, must be lubricated after every 1000 hours of operation.

Use only a grease approved by Allis-Chalmers Mfg. Co. (refer to Topic 1-B for recommended greases). See your nearest Allis-Chalmers dealer or Allis-Chalmers factory branch for the current approved list of greases.

To lubricate the wheels, use a lever grease gun and nozzle assembly or a volume lubricator and nozzle assembly. Clean the gun or lubricator, flexible hose and coupler thoroughly. Fill the gun or lubricator with an approved grease. Operate the gun to remove air and old grease from the tube. Clean the nozzle tube thoroughly and attach it to the coupler.

1. Wash the outer ends of the wheel shafts so no dirt will enter the truck wheels with the grease. Remove the plug and gasket from the end of the shaft assembly.
2. Remove the dust cap from the end of the lubricating nozzle and insert the nozzle (full depth) into the shaft assembly and hold in that position.
3. Pump the new lubricant in slowly until clean lubricant can be seen coming out along the outside of the nozzle. This will indicate the wheel is full of clean grease.
4. Remove the nozzle and install the shaft plug and gasket. Refer to Figure No. 1.

CAUTION: Pump grease in slowly. Do not use high pressure equipment as pumping the grease in too fast will force open the seals and damage the seal assemblies.

It is recommended that the grease and grease gun be at normal room temperature of 70° F. or above when filling the assemblies, as the grease will flow better to all parts at these temperatures.

IMPORTANT: Do not, under any condition, use oil in an assembly which previously has been packed with grease.

B. OIL LUBRICATED TRUCK WHEELS,

(On tractors prior to HD-7 #12566, HD-10 #6163, and HD-14 #5614.) The oil lubricated truck wheels must be lubricated after every 200 hours of operation.

The lubrication of the truck wheels is a process of flushing out the old lubricant with new lubricant. The lubricating equipment for the truck wheels consists of a special

lubricator which is included in the tool equipment.

Before lubricating the truck wheels, wash the ends of the shafts and the nozzle of the lubricator hose thoroughly. Before inserting the nozzle into the truck wheels, pump the lubricator plunger up and down several times to make sure that it is discharging the full amount of lubricant.

Remove the plug from the end of the truck wheel shaft and insert the nozzle into the shaft as far as it will go (approximately 6 inches). Holding the nozzle firmly in position, pump the lubricant slowly into the wheel. The plunger should be lifted slowly and to its full height so that the full amount of lubricant will be drawn into the plunger barrel.

Pump the new lubricant in slowly until all the old lubricant is removed and new lubricant can be seen coming out along the outside of the nozzle. This will indicate the wheel is full of clean lubricant.

CAUTION: Never put too much pressure on the lubricator handle because of the danger of developing extreme pressure which is injurious to the truck wheel seals. Immediately after injecting the lubricant into the wheel assembly, replace the plug and gasket to prevent the new lubricant from running out. The nozzle should always be inserted into the carrying handle when the lubricator is not in use to prevent dirt from entering the nozzle hose. Refer to Figure 2.

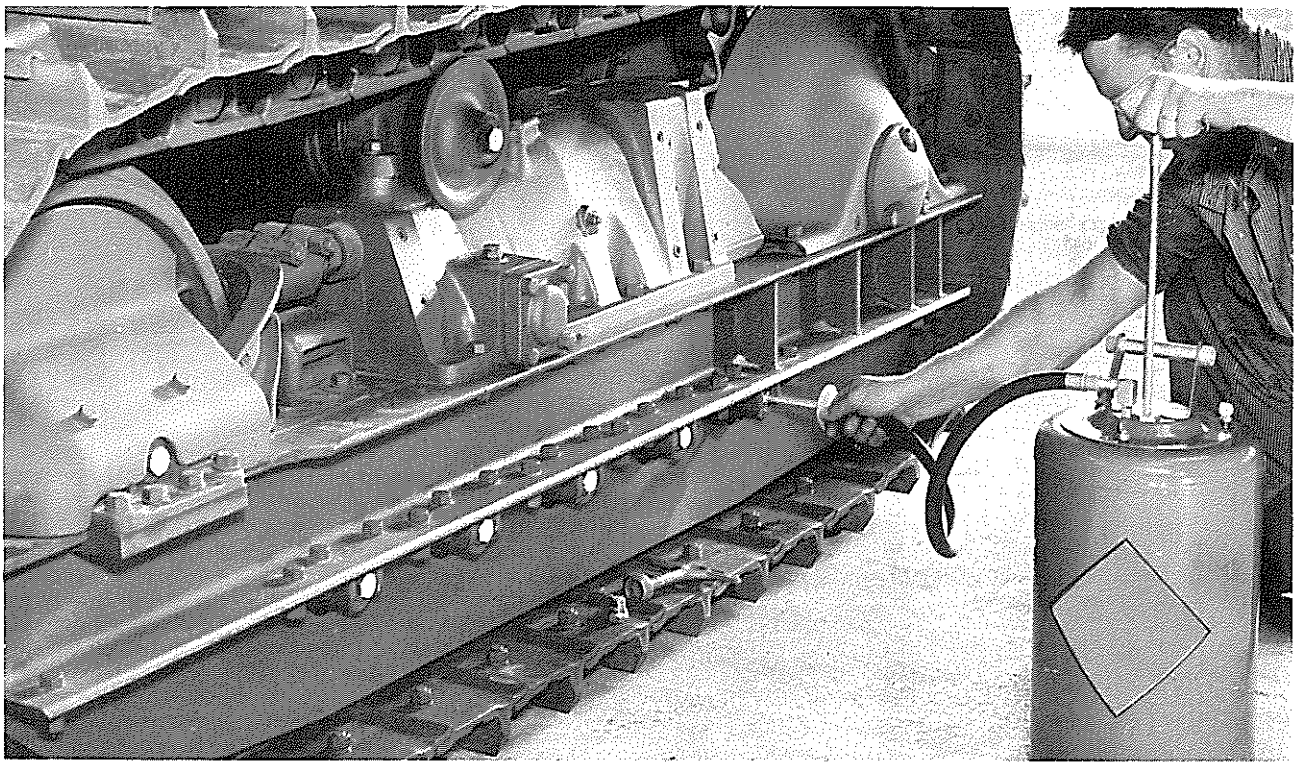

FIG. 2

Servicing Oil Truck Wheels

7 -- Front Idler Lubrication

The front idlers are positive sealed and are lubricated at the same time intervals, in the same manner, and with the same lubricant as the truck wheels.

8 -- Support Roller Lubrication

The support rollers are lubricated at the same time intervals, in the same manner, and with the same lubricant as the truck wheels and front idlers.

NOTE: Truck wheels, front idlers and support rollers that are being operated with oil can be grease-packed in the field without removal from the tractor, providing they are in good condition, however, customers preferring to continue to use oil may do so on assemblies containing oil. If oil is used, it should be a brand on our approved list and the interval should remain at 200 hours.

IMPORTANT: Be absolutely certain that the assembly is in good condition and that there is no excessive oil leakage before packing with grease in the field. Inspect the assembly for end play and any looseness. To inspect the truck

wheels it is necessary to take the weight of the tractor off of them. Check each truck wheel support roller, and idler separately. If end play or up and down motion is present the assembly should be removed and repaired before serious damage or complete failure occurs. Packing an assembly with grease will not correct worn or broken parts.

After grease packing, paint the shaft plugs RED which will indicate they have been grease-packed. All grease packed assemblies coming from the factory will have the plugs painted red. Assemblies which have been packed with grease should never, at any time, be lubricated with lubricating oil.

9 -- Care of Pilot Bearing

The pilot bearing is lubricated through a wick in the end of the crankshaft. If the pilot bearing fails because of insufficient lubrication, a new wick must be installed in the crankshaft.

10 -- Lubricating Oil Filters and Oil Cooler

To provide a normal flow of clean, cool oil to the engine it is essential that both the primary oil filter, secondary oil filter and cooler be kept in good condition. Each of these units will be discussed separately in the following text.

A. PRIMARY OIL FILTER

1. The primary oil filter of the double screen type, is located in the lubricating system between the oil pump and the oil cooler. (See illustration). ALL THE OIL FROM THE PUMP PASSES THROUGH THE FILTER AND COOLER. The oil filter removes all larger particles from the oil and collects a portion of the sludge from the oil on the two screen elements. The filter removes particles from the oil larger than .005" in diameter. If the filter should become clogged, the by-pass valve will open and allow the oil to flow directly from the pump to the main oil gallery, This condition should, by no means, be tolerated since oil flowing by way of the by-pass will not have the benefit of being filtered or cooled, and continuous operation in this manner will cause unlimited damage to engine parts.

B. REMOVAL AND CLEANING OF PRIMARY FILTER.

1. Remove filter drain plug.
2. Remove the oil filter retainer bolt.
3. Remove the oil filter shell and filter elements from the oil filter and cooler adapter housing.
4. The filter elements must be washed every time oil is changed. Wash the elements in fuel oil with a soft brush. Do not scrape the elements with a sharp or metal instrument or wire brush. Wash the filter base and outer shell before assembling.

   After washing, reassemble the unit on the filter base. After assembling, check to see whether copper gasket under retainer bolt prevents oil leaks. Also be sure oil filter shell gasket fits properly. Run the motor for a few minutes and inspect for oil leaks.

C. CLEANING PRIMARY FILTER ELEMENTS AND OIL COOLER WITH SOLVENTS.

A strainer that has become loaded with impurities can usually be cleaned only through use of special solvents in conjunction with some type of circulating system that will create a flushing action. NOTE: When a filter element is removed from an engine it should be cleaned immediately. Do not allow a dirty element to dry, since this will cause lacquer or sludge deposits to harden. Keep submerged in a pail of fuel oil before cleaning.

1. EFFECTIVE SOLVENTS
   Excello Floor cleaning compound
   Bendix cleaning compound
   Turco cleaning compound
   #70 stripper

   A mixture of Oakite #7 and fuel oil; 3 parts Oakite and 5 parts of fuel oil.
   NOTE: The solvents listed above should be used according to the directions of manufacturer. After cleaning operation is completed all traces of the cleaning solution should be washed from the filter elements. In the event that the above procedure does not eliminate the clogged condition, a new element must be installed.
2. Another very effective solvent is the new Bendix cleaner which dissolves or loosens the sludge or other foreign matter that may be collected on the metal of the oil cooler or filter elements.
   Its application is very simple since all that is required is submersion of cooler or filter elements in solution for a sufficient length of time to allow the chemical action of the fluid to properly remove the impurities. The length of time for the submersion will depend upon the condition of the cooler or filter elements. The impurities, etc., removed from elements will settle in the bottom of the

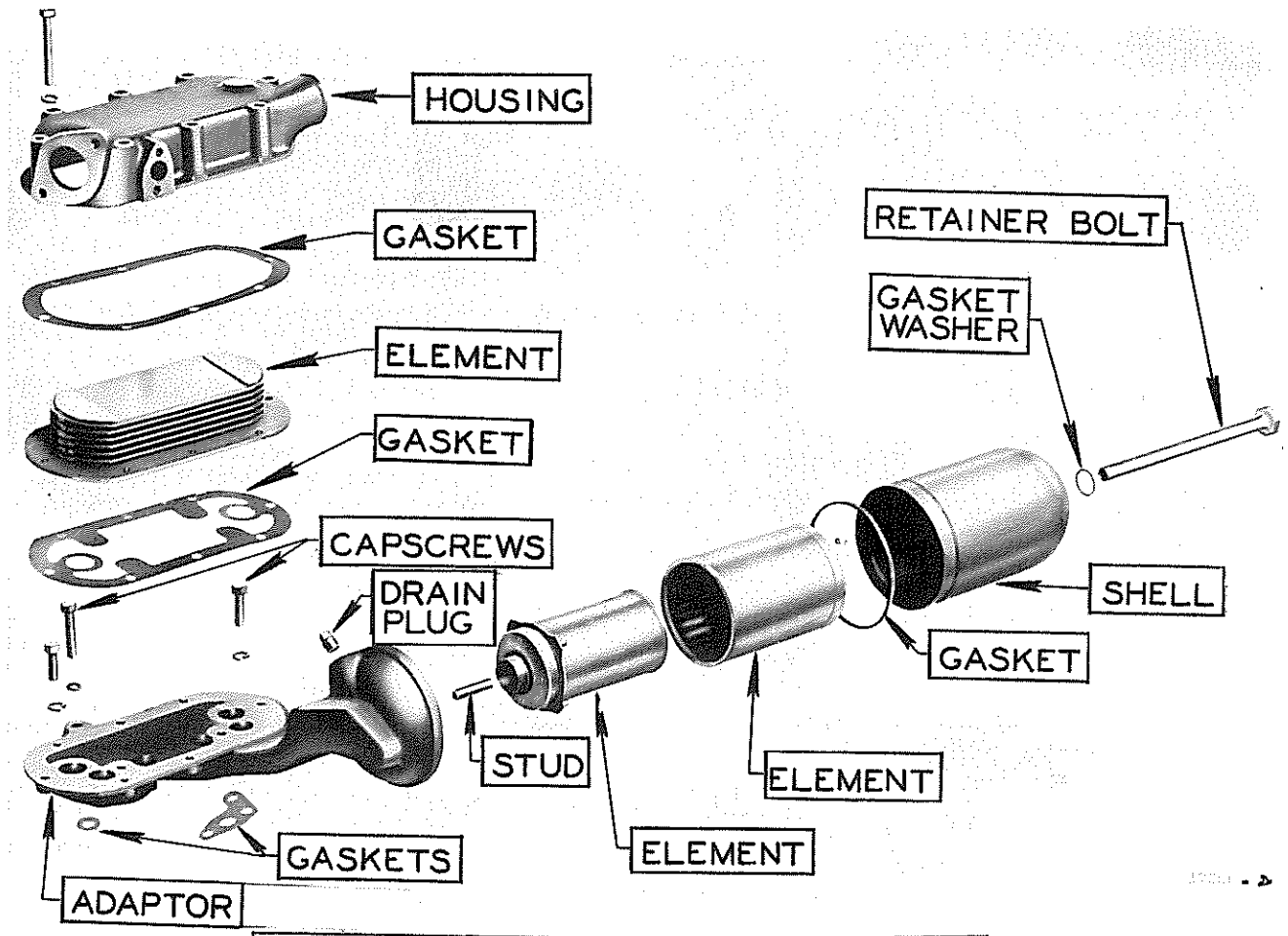

PRIMARY OIL FILTER AND OIL COOLER

containers used for this cleaning operation.

3. After the above operation, the cooler or element should be left to drain for a few minutes, then followed with a thorough washing with live steam to remove all traces of the cleaning solution. If solution in container is properly covered to prevent evaporation, it may be used again.
   NOTE: The above information is submitted in a general manner in order to explain the principles of this cleaner. However, it is recommended that the more specific instructions supplied by the manufacturer of cleaner be studied carefully before using any cleaning solution

D. SECONDARY OIL FILTER

The secondary oil filter is located on the left side of the motor. The inlet line at the top of the filter body is connected to the main oil gallery in the cylinder block.

The outlet line from the filter body is at the bottom and drains back into the crankcase.

Only a portion of the oil flows through this filter. This filter has a replaceable element and must be changed every 4th oil change or every 240 hours of operation.

E. REMOVAL OF SECONDARY FILTER ELEMENT AND INSTALLATION OF A NEW ONE.

1. Remove the drain plug at the bottom of body and loosen the cover; let the oil drain out before removing the element.
2. Remove and discard the filter element.
3. Clean out the filter body and replace drain plug.
4. Install new element, new cover gasket and tighten cover securely.
5. When installing new element one extra quart of oil is required for crankcase filling. NOTE: When filling crankcase with oil fill only to "Full" mark on crankcase bayonet gauge.
6. Start motor, inspect for leaks and run for a few minutes. Then stop motor and let it stand long enough for the oil to drain back into crankcase. Test with crankcase bayonet gauge to see if more oil is needed.
7. In cold weather the motor should be run long enough to attain operating temperature before checking the oil level.

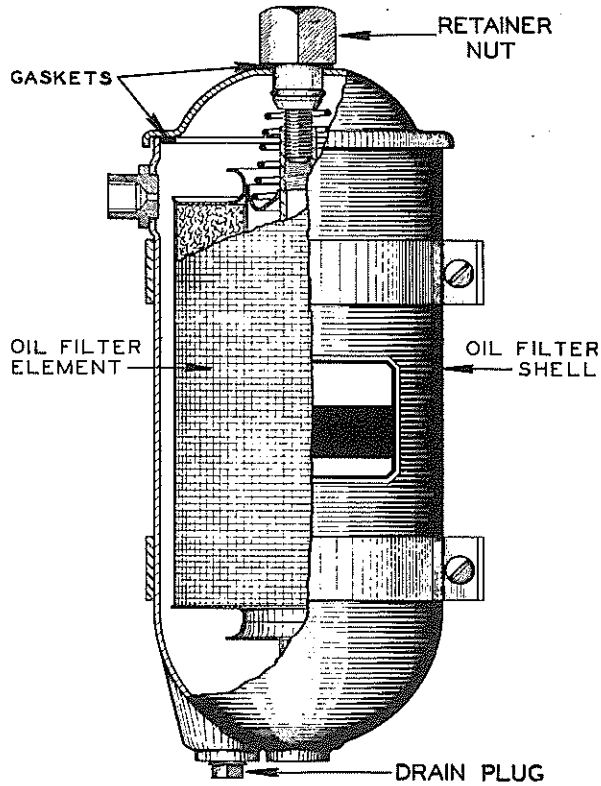

SECONDARY OIL FILTER

FIG. 2

F. OIL COOLER.

1. The lubricating oil cooler lowers the oil temperature as the oil travels through the small passages inside the cooling unit. If these passages become entirely clogged, no cooling of the oil can take place, and the oil is by-passed directly to cylinder block gallery. It is absolutely necessary that the oil cooler unit be kept clean for proper oil cooling.
2. Cleaning of a clogged cooler is sometimes very difficult. A cooler that has become loaded with impurities over a long period of operation can usually be cleaned only through use of special solvents in conjunction with some type of circulating system that will create a flushing action. However, in most cases, the use of any of the special solvents, as listed previously in a hand operated force pump will dislodge any accumulation. In the event that such treatment does not eliminate the clogged condition, a new cooler element must be installed. NOTE: A clogged oil cooler or filter is a contributing factor to low engine oil pressure which may be the cause of one or many operating difficulties. For further information on the effects of clogged oil cooler or filter element on engine oil pressure refer to Topic 25J "Low Oil Pressure."

11 -- Fuel System and Filters

DESCRIPTION:

Fuel is drawn from the bottom of the fuel tank, through the first stage filters, by the transfer pump. The transfer pump then forces the fuel through the second stage filter to the fuel intake manifold on the right side of the engine. The fuel then flows under pressure to the injectors. Note that the fuel entering the injectors is filtered through a porous bronze filter. The surplus fuel leaves the injectors through another porous bronze filter, flows into the return fuel manifold and back to the fuel tank through the return fuel line.

A. FUEL SYSTEM

NORMAL FUEL OIL PRESSURE IS 25 TO 65 ON GAUGE AT HIGH IDLE. DO NOT OPERATE ENGINE WHEN FUEL PRESSURE IS NOT WITHIN THIS RANGE.

The Diesel engine in this tractor depends upon the circulation of fuel oil through the injectors to keep the injectors cool. The transfer pump circulates approximately 30 gallons of fuel per hour through the injection system. If this quantity is allowed to decrease, serious damage to the injectors may result from over-heating. As the fuel filters begin to clog, the quantity of fuel circulating through the injectors diminishes. Although this flow may be sufficient to keep the engine operating normally, it may be reduced to the point where the injectors are becoming dangerously over-heated. Therefore, proper performance of the engine does NOT necessarily mean that enough fuel is being circulated, so we recommend that the fuel filtering system be inspected and the necessary filter elements replaced at the first indication of a deviation in fuel oil pressure from normal.

The first two or three times the operator has to change the fuel filter elements will give him a good indication as to about how often it will be necessary for the filter elements to be replaced thereafter. That is, if the filters clog on an average of every 450 hours for the first two or three times, the filter element should be changed, as an item of routine service, every 400 hours of operation thereafter without waiting for a drop in fuel pressure

The length of time that fuel filter elements will operate, of course, depends upon the type and kind of fuel being used and the care used to keep it clean in storage and handling. In accordance with the above

paragraphs, change the filter elements in the FIRST AND SECOND STAGE FUEL FILTERS after a reasonable number of hours of operation even though they are not completely clogged, in order to safeguard the injection system.

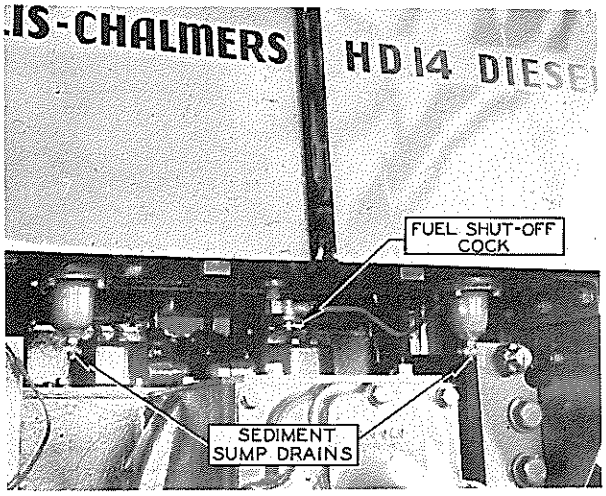

FIG. 1

B. FUEL SEDIMENT TRAPS

The sediment sumps on the fuel tank should be drained every 10 hours of operation or daily before starting engine at the beginning of the operating period. In freezing weather, drain at end of operating period as water might collect in traps and cause damage by freezing.

C. FIRST STAGE FUEL FILTER

Under normal operating conditions when using clean fuel, the FIRST STAGE FUEL FILTERS between sediment sump and transfer pump should operate without clogging for approximately 300 to 500 hours. The elements in these filters are replaceable. A drop in fuel pressure may indicate that the filter is clogged. Never attempt to clean the filter element. If clogging occurs, install a new element.

D. SECOND STAGE FUEL FILTER

The SECOND STAGE FUEL FILTER, between transfer pump and the injectors, is a replaceable element type. When clean fuel is used under normal operating conditions, the element should last from 300 to 500 operating hours. When clogging of this filter occurs, install a new element. Do not attempt to clean the clogged filter element.

Open the drain at the bottom of the SECOND STAGE FUEL FILTER every morning or every 10 hours of operation to drain off any water and sediment which may have accumulated.

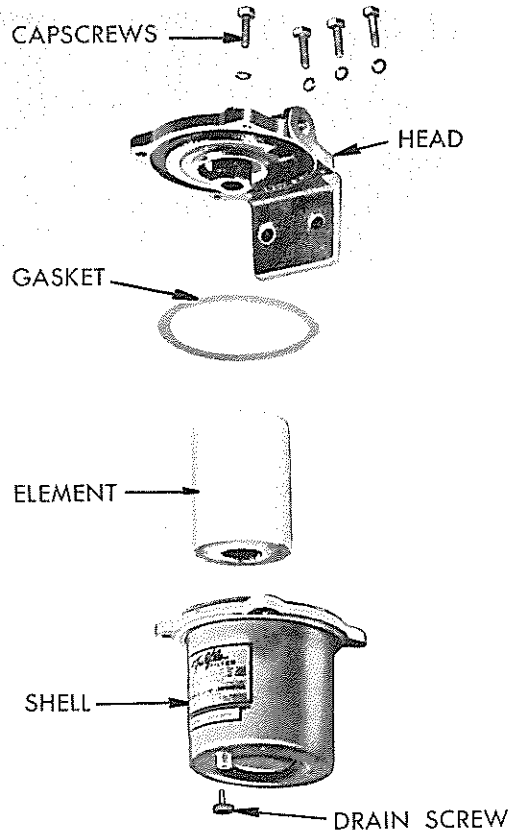

FIG. 2

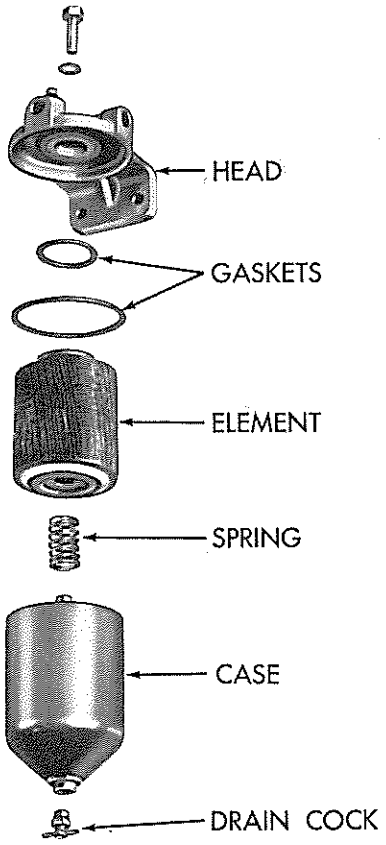

FIG. 3

12 -- Pre-Cleaners

DESCRIPTION:

The purpose of the pre-cleaners must not be underestimated, as their duty is to remove a large percentage of the foreign material before it enters the air cleaners. Dirt is trapped in the pre-cleaner shells where it can easily be removed. The pre-cleaners are provided with an eye glass through which the dirt accumulation may be seen. The pre-cleaners will not function properly if the dirt level in the shell covers over one-half the eye glass.

To service pre-cleaners remove wing nut and cap assembly. Lift pre-cleaner shell from cleaner body and remove dirt from shell by shaking. Be sure louvers on cleaner body are not bent or clogged with leaves or other foreign material.

CAUTION: When replacing cap and nut assembly be sure gasket is in good condition and in proper place with wing nut tight to prevent leakage so purpose of pre-cleaner will not be defeated.

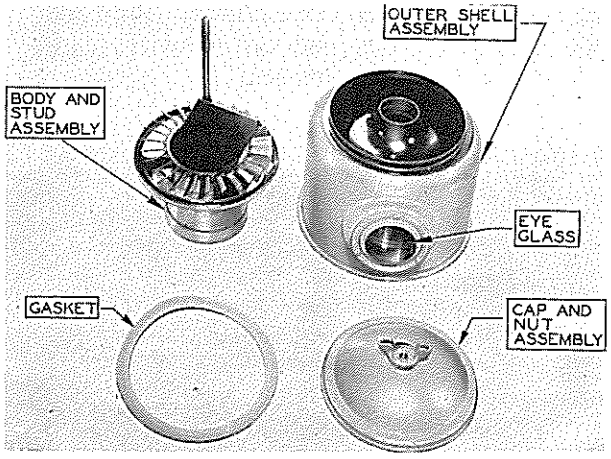

FIG. 1

13 -- Care of Air Cleaner

The air cleaners must be inspected every ten (10) hours of operation. Remove the oil cups and inspect the amount and condition of the filtering oil. In extreme dusty conditions the oil will have to be changed every eight or ten hours. The oil must be kept level with the top of the cone in the oil cup. Use SAE 40 in the summer and SAE 30 in the winter. Do not use anything lighter and DO NOT USE A DIESEL ENGINE LUBRICATING OIL IN THE AIR CLEANER. These lubricating oils are likely to foam thus reducing air cleaner efficiency and possible oil pull-over with serious injury to the engine.

In extreme dusty conditions the air inlet tube of the air cleaner must be swabbed out every ten hours of operation. Oil from the oil cup splashes up on the inside of the tube and collects dust on the sides of the passage, this dust accumulates and reduces the volume of air going through the air cleaner.

A broken hose, loose clamps, or a leak of any kind between the air cleaners and the blower will defeat the purpose of the cleaners. ALL CONNECTIONS MUST BE TIGHT. Improper care of the air cleaners will result in abnormal wear of blower. rings, pistons and cylinder liners.

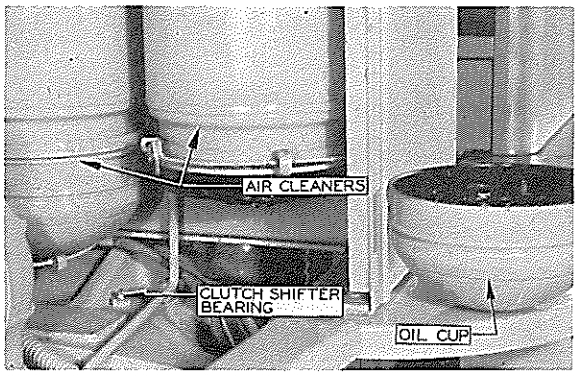

FIG. 1

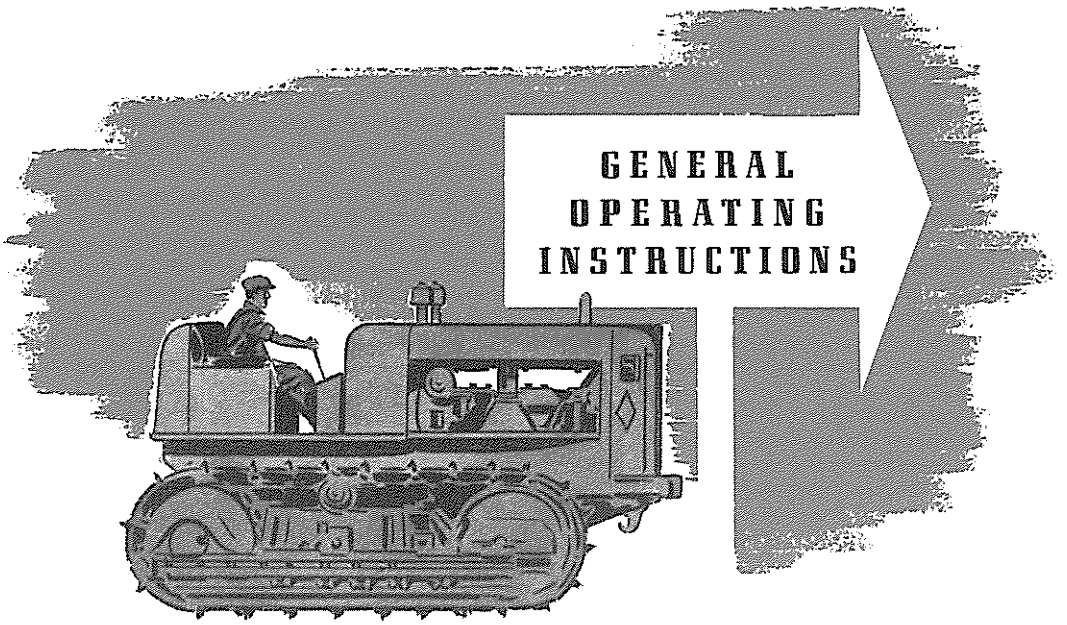

SAFETY:

Be sure to take necessary precaution so that neither you nor anyone else can be injured by a machine being started or moved without warning.

GENERAL OPERATING INSTRUCTIONS

14 -- Preparing Tractor For Use

Make a complete inspection of tractor for any shortage or damage which may have occurred while in transit or in storage.

Remove the air cleaner cups to make sure they contain the correct amount and grade of oil. Refer to Topic 13. "Care of Air Cleaner."

Inspect the oil level in the engine crankcase, transmission case, final drive gear cases, and the track release spring housings. Change engine crankcase oil after first 30 hours of operation.

The truck wheels, track support rollers and front idlers, have been lubricated at the factory for test purposes only. It is essential that all parts be lubricated before the tractor is put into service. Refer to Topics 6, 7 and 8 on "Truck Wheel, Front Idler and Support Roller Lubrication."

Inspect the fuel in tank and fill, if necessary, with the correct fuel oil. Refer to Topic 1-D "Fuel Oil." Special care must be taken to prevent the entrance of dirt or foreign materials while filling the tank.

Fill the cooling system with clean water that is free from limes or alkalines, and REMOVE PLUG IN THERMOSTAT HOUSING to release the air that is trapped in housing.

Operate a new tractor with a light load during the first sixty hours.

The most important factor in running in a new engine or one which has just been overhauled is OPERATING TEMPERATURE.

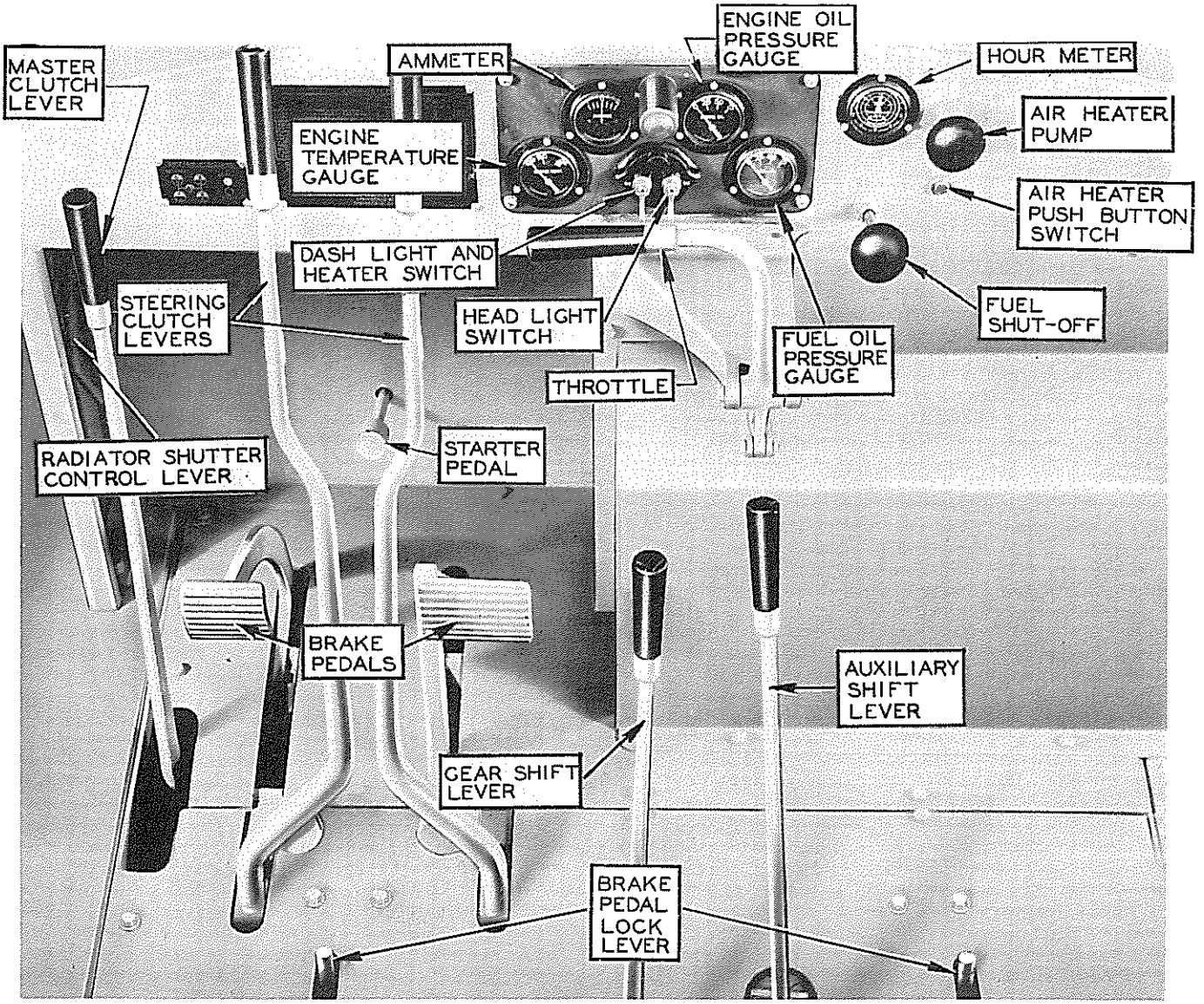

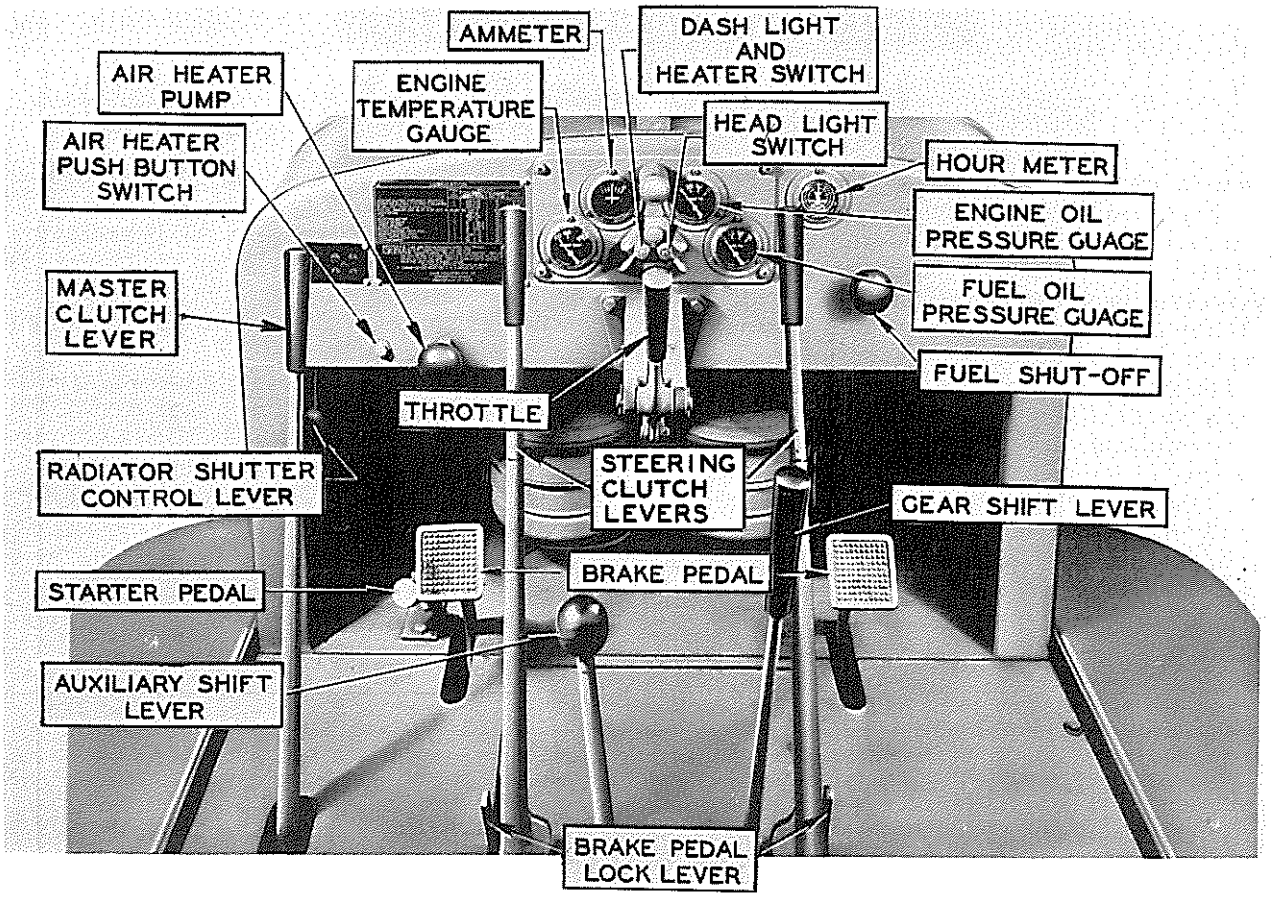
AMMETER
DASH LIGHT AND HEATER SWITCH
AIR HEATER PUMP
ENGINE TEMPERATURE GAUGE
HEAD LIGHT SWITCH
AIR HEATER PUSH BUTTON SWITCH
HOUR METER
ENGINE OIL PRESSURE GUAGE
MASTER CLUTCH LEVER
FUEL OIL PRESSURE GUAGE
FUEL SHUT-OFF
THROTTLE
RADIATOR SHUTTER CONTROL LEVER
STEERING CLUTCH LEVERS
GEAR SHIFT LEVER
BRAKE PEDAL
STARTER PEDAL
AUXILIARY SHIFT LEVER
BRAKE PEDAL LOCK LEVER

"HD 10"

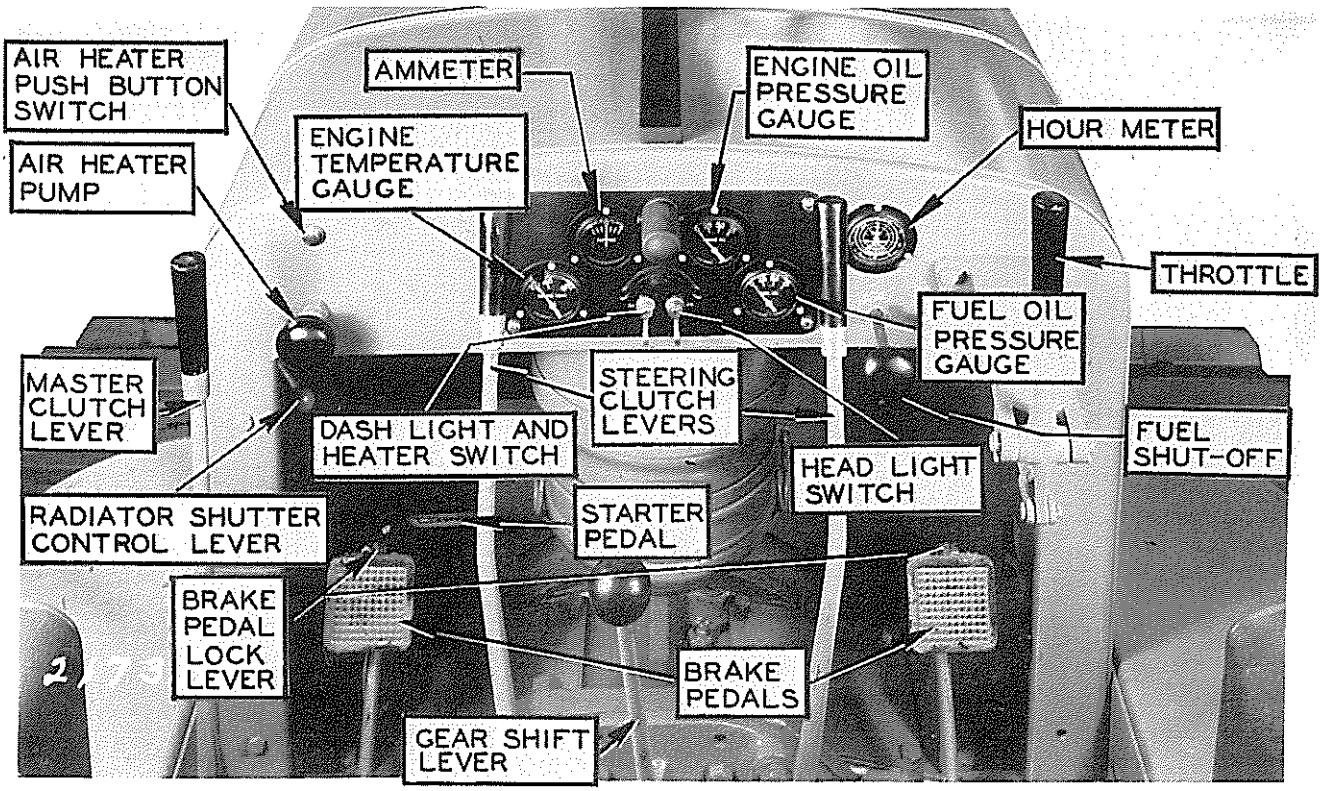
AIR HEATER PUSH BUTTON SWITCH
AMMETER
ENGINE OIL PRESSURE GAUGE
HOUR METER
AIR HEATER PUMP
ENGINE TEMPERATURE GAUGE
THROTTLE
FUEL OIL PRESSURE GAUGE
MASTER CLUTCH LEVER
STEERING CLUTCH LEVERS
DASH LIGHT AND HEATER SWITCH
FUEL SHUT-OFF
HEAD LIGHT SWITCH
RADIATOR SHUTTER CONTROL LEVER
STARTER PEDAL
BRAKE PEDAL LOCK LEVER
BRAKE PEDALS
GEAR SHIFT LEVER

"HD 7"

The engine temperature must be brought to normal, 175° to 185°, as soon as possible and carefully maintained as nearly as possible within this range. Temperatures of 150° and below are conducive to the formation of gum and sludge, both highly detrimental to an engine.

DO NOT, THEREFORE EVER IN THE LIFE OF A TRACTOR, ALLOW IT TO OPERATE AT LOW TEMPERATURE.

After the first ten hours of operation, the tractor should be stopped and inspected for loose bolts and nuts and the steering clutch throwout and the master clutch adjustments inspected; adjust if necessary.

The valve lash, injector equalizing and timing should be inspected and adjusted if necessary. Refer to Topics 42, 43 and 44.

All track shoe bolts should be tightened with a heavy duty socket wrench with extended handle.

15 -- Use of Controls and Instruments

The first thing the operator of a new tractor must do is to familiarize himself with the various controls provided for its proper operation. This does not apply to the beginner alone, as although there are many points of similarity among all tractors, there are also important differences, and it is not wise, regardless of previous experience, to operate a new tractor before fully understanding what each control is for and how to use it.

A. FUEL SHUT-OFF

The fuel shut-off knob controls the air and fuel to the engine. To open the fuel and air for running position, push the fuel shut-off knob all the way in. When the knob is all the way out, the air valve is closed and injectors locked in the shut-off position.

B. STARTER PEDAL

Push on the starter pedal to engage the starter pinion with the flywheel ring gear and to operate the starter switch. Each time the starter pedal is depressed it must be allowed to return to its original position (all the way out), and starter given time to cease spinning before the starter can again be used. Otherwise starter runs but will not turn engine. NOTE: If the engine does not start in less than one half minute allow the starter and battery to cool for 15 minutes before it is used again. See Topic 16A. "Starting Engine".

C. DASH LIGHT AND HEATER SWITCH

The dash light and heater switch completes the circuit between the battery and the air heater push button switch. Turn the switch lever to the left for the ON position and to the right for OFF position.

D. AIR HEATER PUSH BUTTON SWITCH

The air heater push button switch completes the circuit between the dash light switch and the air heater coil. To operate, turn the dash light switch lever ON and depress the push button switch while operating the air heater pump.

E. AIR HEATER PUMP

The air heater pump delivers the fuel oil under pressure to the air heater spray nozzle, where it is ignited by a continuous spark, thus heating the air box to aid cold weather starting. To operate the air heater, the dash light and heater switch must be ON, and the air heater push button switch held in. Then pump the heater pump handle slowly—with the starter turning engine until it starts. For further instruction see Topic 16-A, "Starting Engine."

F. THROTTLE LEVER

The throttle lever is connected to the variable speed governor. Push the throttle lever forward to decrease, and pull back to increase, the engine speed.

G. RADIATOR SHUTTER CONTROL LEVER

The radiator shutters aid in maintaining proper engine temperature (175° to 185° F.) and are adjusted by means of the lever under the left hand side of the cowl. The shutters are fully open when the control lever is moved forward as far as it will go. To close the shutters, pull the lever back.

H. HEAD LIGHT SWITCH

To turn headlights on move head light switch lever to the right.

I. ENGINE OIL PRESSURE GAUGE

The oil pressure gauge indicates the oil pressure in the engine lubricating system. At full throttle and under normal operating conditions, the pressure should be between 25 and 35 on the gauge.

With throttle closed, idle speed, the pressure must not show less than 5 on gauge. CAUTION: STOP engine immediately if no oil pressure is shown on the gauge and determine cause.

J. FUEL OIL GAUGE

The fuel oil pressure gauge indicates the oil pressure in the fuel system. Under normal operating conditions, the fuel pressure at full governed engine speed should be from 25 to 65 on the gauge.

CAUTION: Do not operate engine when fuel pressure, as indicated on the gauge falls below its normal range. See Topic 11, "Fuel System and Filters."

K. ENGINE TEMPERATURE GAUGE

The engine temperature, indicated by the

temperature gauge, should be maintained at all times between 175° to 185° F. Use radiator shutters to maintain the proper temperature.

L. AMMETER

The ammeter registers the amount of charging current delivered to the batteries. Through the action of the voltage regulator, the ammeter reading will be reduced when the battery approaches full charge and increased as the battery approaches a discharged condition.

M. HOUR METER

The hour meter registers the number of hours that the engine has operated. For instruction on how to read the hour meter see Topic 22, "Hour Meter."

N. MASTER CLUTCH LEVER

The master clutch lever controls the master clutch which transmits the power between the engine and the transmission. The master clutch is disengaged and the clutch brake applied when master clutch lever is in the forward position. The clutch is engaged when the lever is pulled all the way back and snaps over center.

O. AUXILIARY SHIFT LEVER AND GEAR SHIFT

These levers are used on the HD 10 and HD 14 to select the desired transmission gear ratio. The auxiliary shift has two positions—forward and backward, while the gear shift lever has the conventional four position.

NOTE: Both shift levers are provided with a locking device to hold them in the desired gear. The auxiliary shift lever must be moved sideways to the left to unlock it when shifting. The gear shift lever must be moved sideways away from the neutral position when it is desired to shift into another gear.

The HD 7 has only one shift lever with four forward and one reverse speed. Refer to Topic, "Use of Gear Shifting Levers."

P. STEERING CLUTCH LEVERS

The steering clutch levers control the two steering clutches which transmit the power from transmission to the track. These levers are used for steering the tractor. Pull the right lever all the way back to turn the tractor to the right. Allow the lever to return to its forward position when turn is completed. Operation of left steering clutch lever will turn tractor to left.

CAUTION: The steering clutch levers should ALWAYS be pulled back as far as possible when making a turn. NEVER hold lever in an intermediate position. Refer to Topic, "Steering."

Q. BRAKE PEDALS

The brakes are used to retard the speed of, or facilitate turning the tractor. To turn the tractor to the right press on the right brake pedal and to turn to the left press the left brake pedal with the corresponding steering clutch released.

CAUTION: Never use brakes for turning tractor without first pulling steering clutch lever as far back as possible on side toward which turn is being made.

R. BRAKE PEDAL LOCK LEVER

The brake locks are used to hold the brakes in their applied or ON position.

1. (HD-10 and HD-14) To hold the brakes in the locked position the brake pedal lock lever will have to be held forward while applying the brakes. To release the brake locks press the brake pedal and it will automatically release the lock.
2. (HD-7) To hold the brakes in the locked position, tilt the top of the brake pedal pad forward when the brake is applied. To release the brake press on the bottom of the brake pedal pad.

16 -- Putting Tractor To Work

A. STARTING THE ENGINE

Before the engine is started, the operator should check the following points on the tractor:

1. Inspect the fuel supply.
2. Inspect the crankcase oil level.
3. Inspect the water or anti-freeze solution in the cooling system.
4. Inspect the entire unit for loose bolts or nuts. This is especially necessary when repairs have been made since the previous operating period.
5. Disengage master clutch (Lever forward) and place gear shift lever in neutral position.
6. Close the radiator shutter by pulling on the shutter control lever.
7. Push the fuel shut-off knob in.
8. Open the throttle control to the fullest extent.
9. Push the starter pedal.
   WARNING: If the engine does not start in less than one-half minute, allow the starter and battery to cool for 15 minutes before started is again used.
10. As soon as the engine fires and begins to run, close the throttle to about ¾ engine speed and allow the engine to warm up. When the engine temperature reaches 175° F. open the shutter; the

shutter should be adjusted so that an operating temperature of 175° to 185° F. is maintained at all times.

11. Inspect the oil pressure. At full governed speed and with the engine heated to normal operating temperature, the oil pressure should be between 25 and 35 on the gauge; at part throttle the reading may drop to about 5 on the gauge. If the oil is cold, no pressure may register for about 15 seconds after the engine starts, but if the pressure does not rise to between 25 and 35, the engine should be stopped and the cause determined.
12. Inspect the fuel oil pressure. The fuel pressure at full governed speed should be between 25 and 65 on the gauge.
13. Open the throttle to meet the operating conditions.
14. For extremely low temperatures 0° F. or lower use the Engine Pre-Heater. See Topic 47, "Engine Pre-Heater."
15. In cold weather (+32° F. to 0° F.) when it is necessary to use the Air Heater, proceed as stated above for the first eight operations. Then turn the dash light switch on, press on the air heater switch, pump the air heater pump handle slowly, and press on the starter pedal all at the same time. The air heater will heat the air box and aid starting. Then proceed as stated above.

WARNING: Do not operate the air heater before stepping on the starter pedal.

B. USE OF GEAR SHIFTING LEVERS

Two levers are used on the "HD 10" and "HD 14" to shift gears; only one lever is used on the "HD 7."

Both gear shift levers are provided with a locking device to hold them in the desired gear. The auxiliary shift lever must be moved sideways to the left to unlock it when shifting. The gear shift lever must be moved sideways away from the neutral position when it is desired to shift into another gear.

The following charts shows the positions of the gear shift levers to obtain any of the forward and reverse speeds:

Refer to the gear shift chart on dash of Tractor for the correct positions for the various speeds.

The "HD 7" has only one gear shift lever. The various gears are as follows:

Gear	*Gear Shift Lever*
First	Left and Back
Second	Right and Forward
Third	Right and Back
Fourth	Extreme Right and Back
Reverse	Left and Forward

HD-7 GEAR SHIFT CHART

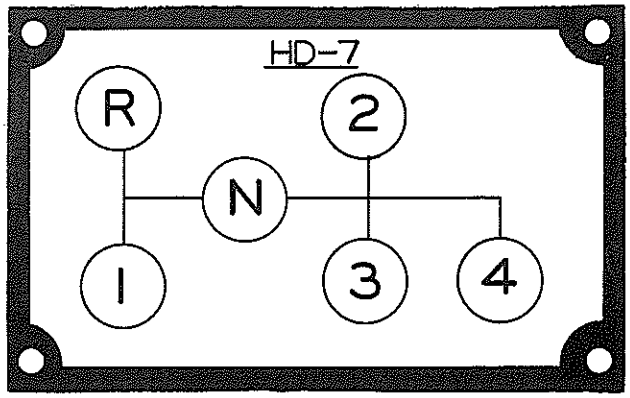

HD-10 GEAR SHIFT CHART

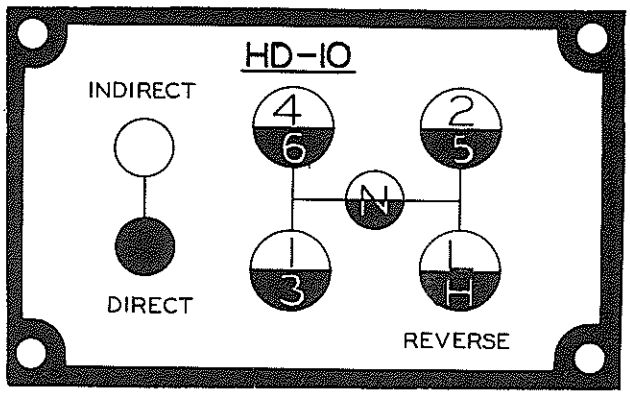

Gear	*Gear Shift Lever*	*Auxiliary Lever*
First	Left and Back	Indirect
Second	Right and Forward	Indirect
Third	Left and Back	Direct
Fourth	Left and Forward	Indirect
Fifth	Right and Forward	Direct
Sixth	Left and Forward	Direct
Low Reverse	Right and Back	Indirect
High Reverse	Right and Back	Direct

HD-14 GEAR SHIFT CHART

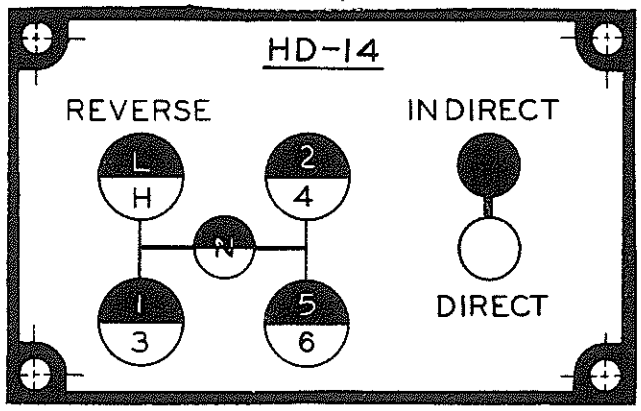

Gear	*Gear Shift Lever*	*Auxiliary Lever*
First	Left and Back	Indirect
Second	Right and Forward	Indirect
Third	Left and Back	Direct
Fourth	Right and Forward	Direct
Fifth	Right and Back	Indirect
Sixth	Right and Back	Direct
Low Reverse	Left and Forward	Indirect
High Reverse	Left and Forward	Direct

To shift gears, push the master clutch lever forward and shift gears to the desired speed. When the lever is pushed forward it forces the release bearing carried against the clutch brake assembly that is fastened to the clutch shaft, thus bringing the transmission gears to a stop. This stopping of the gears enables the operator to shift without clashing the gears.

C. USE OF MASTER CLUTCH

1. The master clutch is of highest quality and workmanship and if given proper care and operated correctly it will give many hours of carefree operation.
2. To obtain maximum clutch life it is important that in starting a load, operator must select a gear low enough to insure easy pick up without clutch slippage. When the correct gear is engaged to handle the load open throttle approximately half way, pull back steadily on master clutch lever until all slack is taken up between tractor and load. Then pull back firmly on clutch lever to lock clutch in its engaged position at the same time opening throttle to attain desired speed. To shift to a higher gear with tractor in motion close throttle at the same time master clutch is disengaged, select desired higher gear, engage master clutch and at the same time open throttle.
3. If conditions are such that the tractor can negotiate in sixth gear with load, start tractor in fifth gear and then shift into sixth gear after tractor has obtained rated speed. Do not slip the master clutch in an effort to pull an overload. Avoid excessive wear on the clutch disc facings by using a lower speed being sure to close throttle into half-way position every time master clutch is disengaged. When it is necessary to let engine idle for short periods, place gear shift in neutral and engage master clutch.

D. STEERING

1. Steering the tractor is accomplished by the use of steering clutches which are operated by steering levers. Turn the tractor in the desired direction by pulling back to the full extent the steering lever on the side toward which the turn is to be made. The clutches must be engaged slowly and evenly to avoid excessive wear on them. Do not release the levers and let them fly forward. Do not operate tractor with steering clutches partially disengaged. Avoid excessive wear of the steering clutches by releasing and engaging the steering clutches smoothly and completely. See Topic 55 and 56, "Steering Clutch Adjustment."

   In steering the tractor down steep grades with the load pushing the tractor, the use of the steering clutches is opposite to that of a tractor pulling a load. If it is desired to make a turn toward the right, the left steering clutch should be released. The engine being connected to the right track acts as a brake retarding its progress while the left track is released and free to travel faster.

E. USE OF STEERING CLUTCH BRAKES

1. The steering clutch brakes are used to retard the speed of or to hold track stationary when the steering clutch on that side is released for making a turn. In making a turn always release the steering clutch before depressing the brake. They are also used as service brake for retarding speed of tractor when going down grade and to hold tractor stationary. DO NOT OPERATE TRACTOR WITH FEET RESTING ON BRAKE PEDALS.
2. The brakes can be locked and used as parking brakes when parking the tractor. To hold the brakes in the locked position (HD 10 and HD 14) the brake pedal lock lever will have to be held forward while applying the brakes. When the brakes are to be released again a slight pressure on the brake pedal will automatically release the pedal lock lever.
3. To hold the brakes in the locked position on the HD 7, tilt the top of the brake pedal pad forward when the brake is applied. To release the brakes press on the bottom of the brake pedal pad.

F. STOPPING THE TRACTOR

Stopping the tractor is accomplished by disengaging the master clutch (lever forward) and applying the steering clutch brakes. Then SHUT OFF motor. See Topic 16-G, "Stopping Engine." DO NOT allow tractor to stand with engine idling. If tractor is to be stopped for ONLY a few minutes, let the engine run at NOT LESS THAN TWO-THIRDS throttle (approximately 1000 RPM). With gear shifting lever in neutral position and Master Clutch engaged to eliminate unnecessary wear on master clutch parts and pilot bearing. If tractor is to be stopped longer than a few minutes, STOP ENGINE.

G. STOPPING ENGINE

To stop engine, close the throttle control and pull the fuel shut-off control out as far as it will come.

17 -- Operating in Mud or Water

The master and steering clutch compartments are dry compartments and are provided with drain holes to drain out any oil that might leak into the compartments by over lubrication or other causes. In normal operation, these holes are to be left open. When operating in mud, water, or extreme dusty or sandy conditions these drain holes should be plugged to prevent the entrance of dirt or water. The plugs should be removed daily to allow any oil or grease that might accumulate in the compartments to drain out thus preventing it from getting on the brake bands or clutch facings. If the tractor is idle at night, the plugs may be removed to drain the compartments, then replaced in the morning. Inspect the final drives frequently and drain, wash and refill the case as often as the lubricant shows the presence of any mud or water.

18 -- Cooling System

Keep cooling system filled with clean water that is free from lime or alkalies. In winter weather a standard anti-freeze solution is recommended. The solution should be tested daily and kept to the proper strength for the prevailing temperatures. The anti-freeze used should have a higher boiling point than the normal operating temperature of the engine (175° to 185° F.)

The cooling system has two drain points and both of these should be opened when the unit is drained. One drain point is in the bottom of the water pump housing, the other is at the bottom of the lubricating oil cooler assembly.

CAUTION: WHEN FILLING RADIATOR REMOVE THE PLUG IN THERMOSTAT HOUSING TO RELEASE THE AIR THAT IT TRAPPED IN HOUSING.

Cooling system capacities:

HD 7= 5¾ gals.
HD 10= 9¾ "
HD 14=12 "

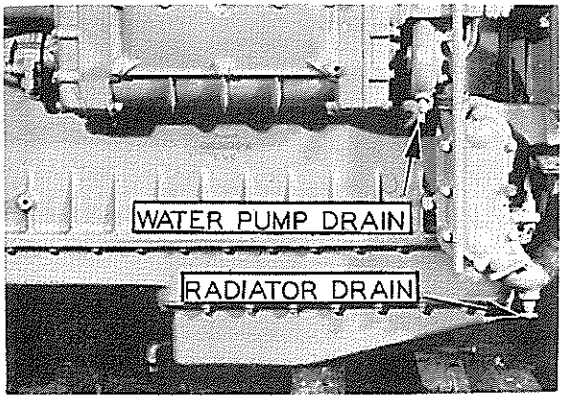

FIG. 1

A temperature range from 175° to 185° F. is most desirable, and to maintain the engine within this range, idling periods should be held to a minimum.

Prolonged engine idling during cold weather results in low operating temperature which adversely affects operation or even results in damage to operating parts. Some of the direct results of sub-normal operating temperature are dilution of lubricating oil, lacquer or tar-like deposits on valves, pistons, cylinders, etc., and sludge deposits.

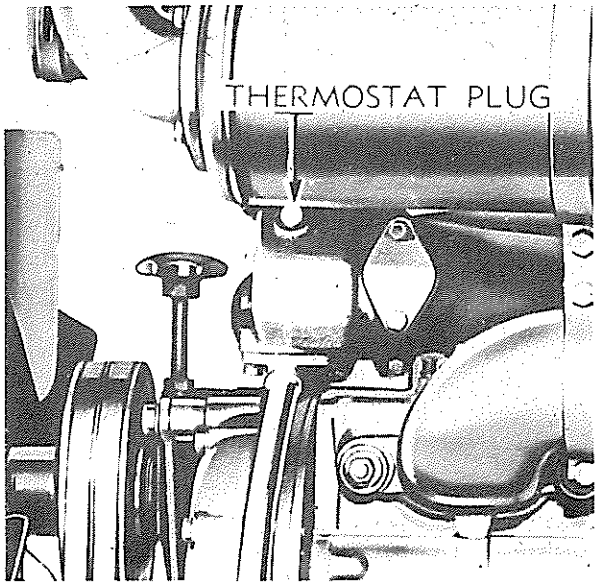

FIG. 2

At low engine temperatures more fuel is used and less power is obtained—thus economy is also affected.

Since correct engine operating temperatures depend almost entirely upon efficiency of the water cooling system, it is advisable to pay special attention to its condition. An inspection of the radiator and fan, thermostat, water pump, radiator shutter, etc., is especially important in cases where an anti-freeze solution is to be used.

When over-cooling develops during normal running conditions, the thermostat should be inspected, and if it is stuck open, or is open as a result of a leak in the bellows , install new thermostat.

19--Effects of Prolonged Engine Idling

Low operating temperatures cause the development of several conditions which can adversely affect operation or even result in serious damage to engine parts.

Because of the high thermal efficiency of a diesel engine, insufficient heat is dissipated to cylinder jackets during idling periods to maintain normal operating temperatures. Consequently, cylinders cool off or become "cold". Fuel injected into cold cylinders is only partially burned. Some is discharged as exhaust in a sharp, pungent vapor of blue-grey color. This vapor is the most volatile (low boiling point) fraction of the fuel. Unburned fuel of the least volatile (high boiling point) fraction will accumulate within the cylinder. Some of this fuel seeps past the pistons and dilutes the lubricating oil; the remainder decomposes into lacquers or tar-like substances which deposit on valves, pistons, cylinders, etc. Moreover, sludge accumulation in the lubricating oil is generally most rapid at sub-normal operating temperatures.

Development of the above conditions can be avoided if the engine operating temperature is kept above 175° F. It is preferable, whenever possible, to stop the engine if a long idling period would otherwise occur. If a stop is undesirable, idling speeds above 1000 r.p.m. should be maintained.

The effects of prolonged idling also greatly depend upon the characteristics of fuel or lubricating oil used. It is advisable to select lubricating oils which possess high oxidation resistance, a minimum tendency to leave hard deposits and of the correct viscosity. For severe idling conditions a fuel with a high cetane rating, a low boiling point, and a narrow distillation range will be most suitable. Consult a representative or an engineer from the oil company which supplies your oil and obtain his recommendation as to their grade of oil which conforms to the specifications in this manual.

20--Care of Generator and Battery

The generator is set to charge at the rate of 4 to 8 amperes when the tractor leaves the factory. This is sufficient to keep the batteries fully charged under ordinary operating conditions.

The storage battery simply stores electrical energy.

Battery failures are more numerous in cold weather. Because the required cranking torque of an engine is materially increased by low temperatures. To crank an engine at 5° F.requires approximately 4 times the torque that is necessary at 80° F. A battery which is fully charged at 80° F. has only about 60% capacity at 20° F. and only 20% capacity at -20° F. Thus, it is quite evident that batteries must be kept in top condition in cold weather. A start will not be obtained when a battery "grinds" the engine over; a cranking speed of 80 r.p.m. is prerequisite to good starting. Use of Air Heater will facilitate starting at temperatures under 40° F.

When weather temperature drops, more attention should be given to the hydrometer readings of the battery. The electrolyte in a fully charged battery should have a hydrometer reading of 1.280-1.300 when corrected to 60° F. When taking readings at temperatures other than the specified standard, it is necessary to make corrections. For every ten degrees above or below 60° F. 0.004 must be added or subtracted, respectively, to or from the observed reading. Specific gravity readings without corrections for temperature are practically meaningless. Thus, if the electrolyte reads 1.275 at 0° F. the following corrections must be made: 60/10 x .004 = .024, and 1.275 - .024 = 1.251 corrected reading. If the corrected reading falls below 1.225, the battery should be recharged from an outside source.

A low battery reading might indicate that attention should be given the generator or voltage regulator. If these units are within specifications and the battery is partially discharged, the wiring system should be inspected for shorts. The top of the battery should be flushed with a soda solution to prevent self-discharge. When all irregularities have been corrected battery should be fully charged.

If corrosion occurs, clean the posts and terminals with a strong soda solution and apply vaseline to post and strap terminals.

Filler plugs should be kept tight at all times and the top of the battery kept dry. The electrolyte should always be maintained at the proper level, and pure or distilled water added periodically to each cell until the solution is about 3/8" above the top of the plates. During freezing weather any addition of water should be made after starting the engine and the engine run for several minutes to thoroughly mix water and solution.

Inspect battery periodically.

21 -- Engine Pre-Heater Operation

If the engine, air heater and batteries are in good condition, the engine can be started in temperatures down to zero by using the air heater only.

In temperatures below zero, it may be necessary to use the engine Pre-Heater #042765, in conjunction with batteries which have been warmed sufficiently to produce enough current to crank engine at approximately 80 R.P.M.

Install the heater intake assembly on the engine in place of one of the air box inspection covers. This intake elbow is divided into two parts by a baffle. The heater extension tube will fit into upper part. The lower opening is for the exhaust of the heater gases after circulation through the air box.

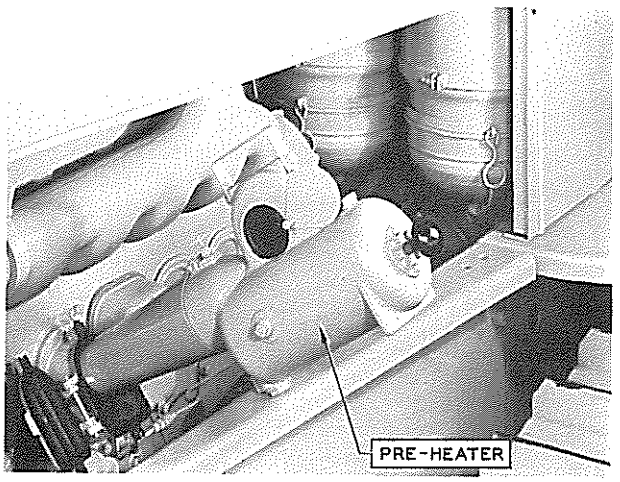

FIG. 1

A. OPERATING THE ENGINE PRE-HEATER:

1. Remove filler plug, and fill the case about 2/3 full of fuel oil, the same as is used in the fuel tank of the tractor. Replace the filler plug securely to prevent leakage.
2. Close the needle valve.
3. Pump up to about 120 pounds pressure, with the hand pump.
4. Close the air regulator plate next to the fan.
5. Connect the heater fan wire to the live starter switch terminal which is directly connected to the battery. Ground the heater body to the tractor. The heater fan should start immediately and run as long as the battery connection and good ground is maintained.
   NOTE: Some of the engine pre-heaters may have two fan wires. One wire is the fan wire and the other is the ground wire. As before, connect one wire to the live starter switch terminal. Connect the other wire securely to any metal part of the chassis. The fan should start running when both wires are connected. It does not matter which fan wire is connected to the live starter switch terminal as the fan will run in only one direction.
6. Raise the heater extension tube or spout and open the needle valve until a good spray or mist is ejected. Ignite the spray with a match or other means. Then lower the heater extension tube.
7. Loosen the wing nuts on top of the intake elbow and turn the cover back. Place the end of the heater extension tube into the intake elbow. Open the air regulator plate.

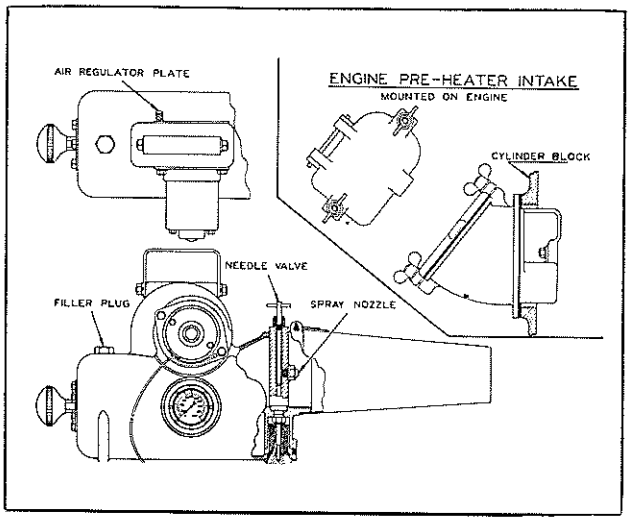

FIG. 2

The heater will blow hot gases into the engine air box which will circulate around all cylinders. For the proper length of time to leave the heater on, refer to the following chart. Caution: Do not attempt to start the engine until the engine pre-heater has been removed and the intake elbow cover has been securely replaced.

Atmospheric Temp.	Leave Heater On
+30° F.	7 min.
+20° F.	8 min.
+10° F.	9 min.
0° F.	10 to 15 min.
—10° F.	10 to 15 min.
—20° F.	10 to 20 min.
—30° F.	15 to 20 min.
—40° F.	15 to 30 min.

After the pre-heater has been in operation for the proper length of time, remove it, close the needle valve and the air regulator plate; disconnect the fan wire. Close the cover on the intake elbow and fasten it securely. Start the engine immediately, using the engine air

heater as for starting in mild cold weather.

The engine pre-heater is used to warm up the engine for easy cranking only and will not aid combustion by furnishing warm air to the cylinders. For this reason, it is necessary to use the engine air heater that is furnished as standard equipment with the tractor. This unit heats the cold air before it is drawn into the combustion chamber.

It is suggested that some thought be given to the method used to operate the air heater to get best results. To use the air heater, first turn on the primer switch then operate the pump with a smooth slow stroke while pressing the button switch and the starter button. THESE THREE OPERATIONS MUST BE PERFORMED SIMULTANEOUSLY. By doing this, practically all the fuel pumped through the air heater will be burned, reducing the collection of raw fuel in the air box to a minimum. If the starter is not used with the air heater the oxygen in the air box will soon be exhausted; then the flame will go out and raw fuel will be pumped into the motor. The air heater should be operated for a short period after the engine starts to keep the engine operating smoothly.

22 -- The Hour Meter

The hour meter, mounted on the right hand side of the dash, is spring driven and electrically wound. Winding is accomplished by an electromagnet or solenoid inside the clock which stretches the coil spring sufficiently to operate the clock for about three minutes. As the spring loses tension a pair of contact points within the clock approach each other. When they finally make contact, another electric impulse excites the solenoid and the clock is again wound, then the contacts separates.

Since this clock is intended to register the number of hours the tractor works, a pressure switch is installed in the engine oil system which breaks the clock-winding circuit whenever the oil pressure drops below 5 pounds. Therefore, the clock can not wind when engine is not running or when it is idling at a speed too low to maintain 5# pressure in the oil line. However, the clock may continue to run as much as 3 minutes after the tractor stops or until the spring has exhausted its energy. The clock has been adjusted to run a little slow to compensate for this overrun.

When reading the clock, read from the inside out, that is, read the short hand first, then the medium length hand and finally, the long hand.

The figures on the inside (short hand) scale, represent thousands of hours; figures on the middle scale, hundreds; and on the outside, tens.

Therefore, when reading the dial read on each scale the number the hand has just passed setting the figures down from left to right. The fourth figure is obtained by counting the number of short marks between the long hand and the figure last passed by that hand.

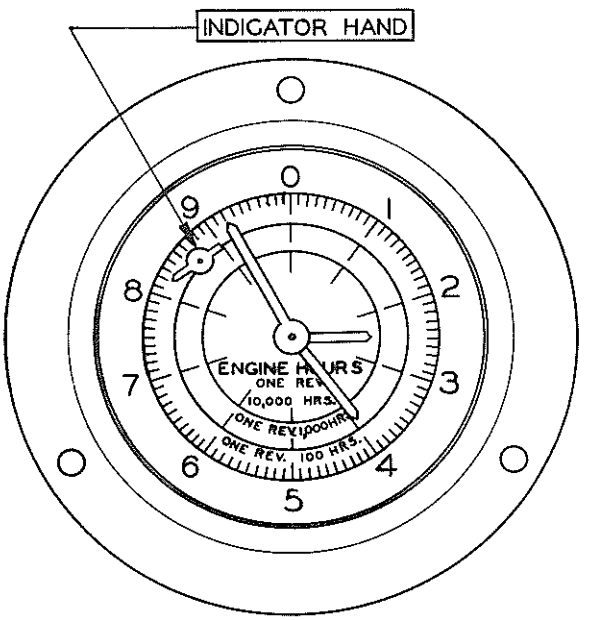

HOUR METER
ABOVE READING
2392 HRS.

Refer to figure 1. Notice that the first three digits of the reading are the three figures just passed by the three hands reading from the inside out, 239. The fourth figure is obtained by counting the marks beyond nine, which gives "2" for the fourth place making the reading 2392 hours.

The indicator hand rotates slowly as visual indication that the hour meter is operating.

23 -- Storage of Fuels

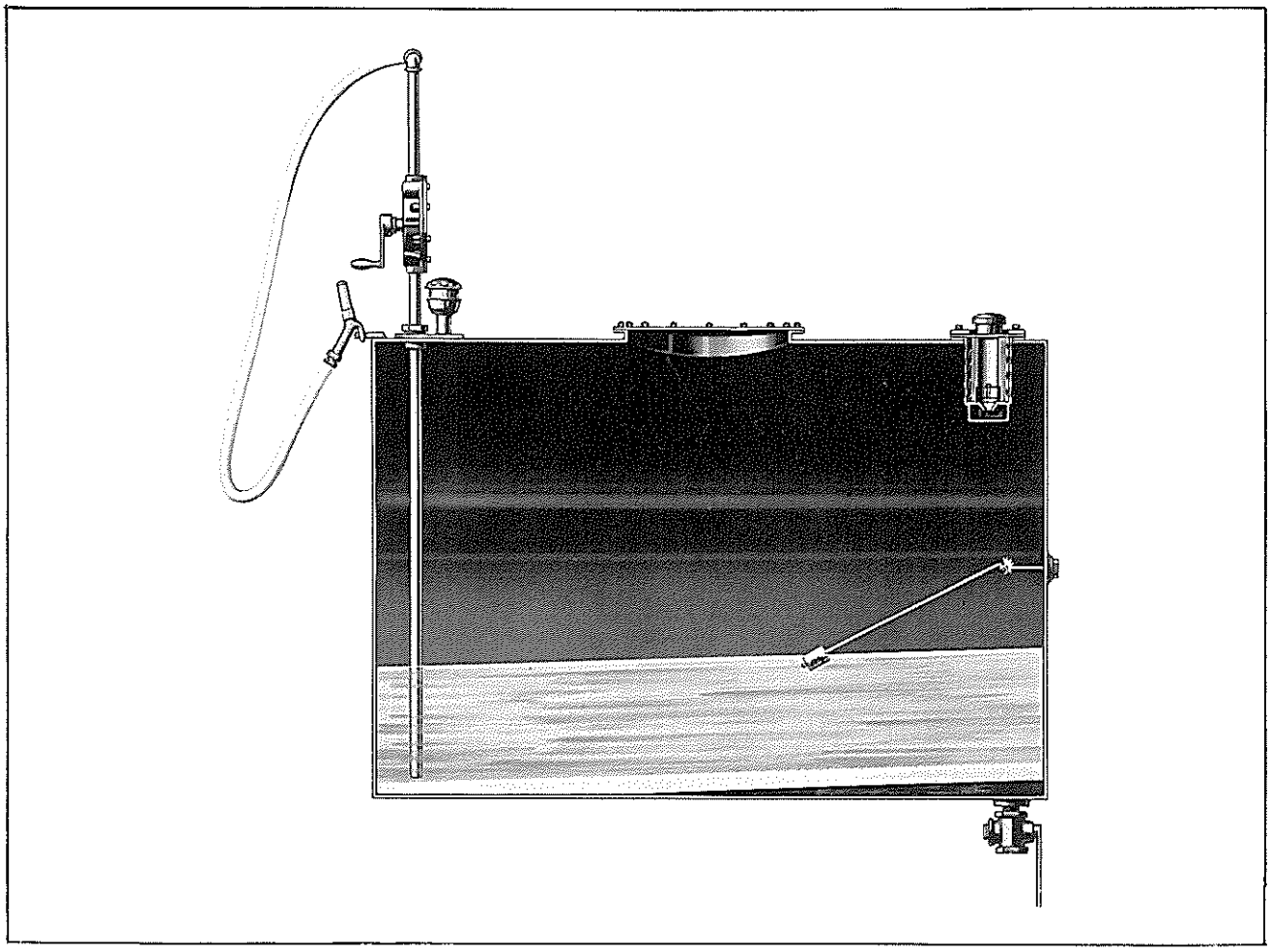

FIG. 1

Nearly all Diesel engine troubles can be attributed to dirty fuel. To keep the fuel injection equipment in its most efficient condition, it is necessary to keep all dirt, scale, water and other sediment out of the fuel.

The importance of proper storage of fuel oil cannot be too highly stressed. The storage tanks, drums, or service tanks must be free from rust, scale, sediment or any foreign matter that may contaminate the fuel and clog the filters.

Fuel oil should be allowed to settle at least 48 hours in the storage container before it is used for filling the fuel tank on the tractor. It is always advisable to use a pump and draw the fuel from the tank or barrel rather than from the bottom by means of a faucet or through the bung hole.

A storage tank provides the best method of storing fuel oil on the job. In a tank, the sediment and water can easily be drained and the fuel oil can be pumped into the tractor with the minimum of handling. Consult your local Allis-Chalmers dealer for details about this type of storage tank.

Where conditions are such that drums must be used to supply fuel, it is advisable to have enough drums to allow sufficient time for the fuel to settle, and then the fuel should only be used to within about three inches of the bottom. The fuel thus left in a number of drums can be collected into one drum and used after the usual time allowed for settling. In this manner, the sediment and foreign matter will be disposed of and no fuel will be wasted. Whenever drums are used for storage, they should be covered or placed under shelter to avoid the fuel becoming contaminated by water which will enter through the filler plugs when it rains.

Since condensation will occur in any tank, it is very important that a trap be provided in the bottom of the storage tank where the water and settlings can be drained off daily. The fuel tank on the tractor should be filled at the end of the day's run rather than in the morning. This will reduce the water content, as a full tank is less subject to condensation. The fuel tank on the tractor is provided with two sediment traps and drain cocks.

24 -- Storage of Tractor

It is sometimes necessary to store the tractor for a few months during the winter or slack season. If the tractor is to be idle for some time, make a complete inspection of the tractor for loose or damaged parts, and install new where necessary.

Drain and refill the engine crankcase with new oil.

In a great many cases faulty operation of a Diesel engine at time of delivery is caused from a gummed or corroded injection system. This condition often results from storing a tractor for an indefinite period with ordinary fuel in the system.

Because of the above fact all new tractors are shipped with a mixture of 20% Mineral Seal oil and 80% Perfection Kerosene in the fuel system. This mixture has no gumming or corroding effects and should be used in any tractor in storage.

By using this type fuel, the injection system will be in good working condition at time of delivery to the customer.

It is not necessary to drain out this fuel at time of delivery. Use it and refill with the recommended grade of diesel fuel.

When a Diesel engine that has been using regular Diesel fuel is prepared for storage or is going to be out of operation for several weeks drain the fuel system and place enough of the above mixture in the tank so that the engine can be run long enough to burn all the remaining Diesel fuel. This will leave the injection system filled with the recommended mixture which will insure against a corroded or gummed injection system when the unit is again placed in service.

Major oil companies can supply this storage fuel.

Remove the batteries and store in a cool, dry place or at a regular battery service station. Sides and tops of the batteries must be kept clean. Batteries should be tested once a month and recharged because an idle battery will slowly discharge. Do not allow the specific gravity of the electrolyte to get below 1.250. When the battery is fully charged, the specific gravity of the electrolyte is 1.280 to 1.300. The exhaust pipe should always be covered when tractor is not in use.

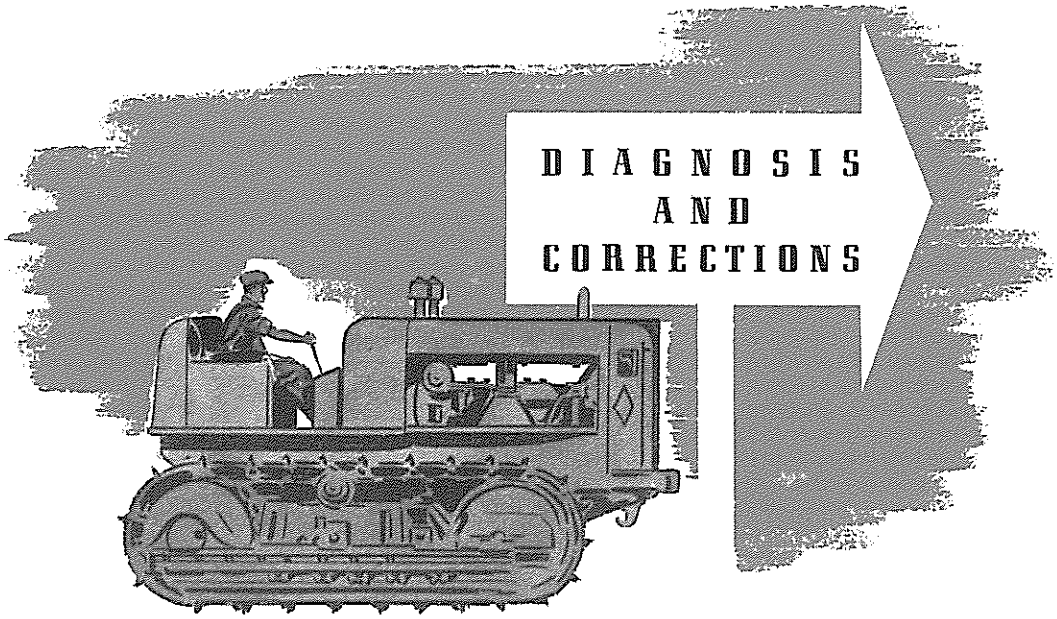

SAFETY:

Be sure of your footing before making a heavy lift. Lift steadily; don't jerk.

DIAGNOSIS AND CORRECTIONS
25 -- Engine

Diagnosis	Corrections	Refer to Topic No.
A. FAILS TO START		
1. Battery too low to turn engine fast enough.	Charge battery or install battery that will crank engine at least 80 R.P.M.	20
2. Starting Motor switch defective.	Inspect starter switch shift lever capscrew. Adjust correctly.	95
3. Poor Connections.	Clean and tighten connections.	20-95
4. Fuel shut-off control not in proper position.	Place in forward position.	15-A
5. Insufficient fuel to injectors.	Inspect fuel supply, shut-off valve , filters, fuel pump and lines.	11
6. Cold weather.	Use air heater.	16
7. Fuel shut-off lever on governor loose on the shaft.	Tighten clamp bolt in proper position	46
8. Motor oil too heavy.	Use correct weight oil.	1
B. LOSS OF ENGINE POWER		
1. Fuel shut-off and air valve control linkage adjusted incorrectly.	Adjust linkage.	46
2. Insufficient fuel.	Check supply and lines.	11
3. Filters clogged.	Install new filters.	11
4. Improper fuel.	Obtain proper fuel.	1
5. Defective transfer pump.	Repair or install new pump.	91
6. Injectors not equalized.	Equalize injectors.	45
7. Injectors not timed properly.	Time the injectors.	42
8. Air cleaner clogged.	Remove and clean bowl.	13
9. Pre-cleaners clogged.	Clean pre-cleaners.	12
10. Air port holes plugged in cylinder sleeves.	Remove cylinder head, blower, inspection plates and clean port holes.	84-D
11. Worn governor parts.	Make repairs needed.	93
12. One or more cylinders misfiring.	Locate and correct cause.	11-19 & 42-44
C. POOR COMPRESSION		
1. Valves not seating.	Adjust valve lash, reface valves or install new and lap in.	44
2. Valves seats worn, pitted or cracked.	Grind valve seats, if cracked, install new ones.	78
3. Piston rings weak, broken, stuck or worn.	Install new rings and correct cause of sticking.	83
4. Bent valve.	Install new valve.	78
5. Sticking valve.	Free stem and correct cause.	
6. Broken valve spring.	Install new spring.	78
7. Valve lash too close.	Adjust to .012" lash.	44
8. Excessive valve guide wear.	Install new valve guide.	78

Diagnosis	Corrections	Refer to Topic No.
9. Leaky cylinder head gasket.	Install new gasket.	78
10. Worn cylinder liners.	Install new liners.	84
11. Worn pistons.	Install new pistons.	83
D. EXCESSIVE PISTON AND CYLINDER LINER WEAR		
1. Oil of unsuitable composition, grade or viscosity.	Change to oil of suitable specifications.	1
2. Carbon bulding up on pistons and rings.	Sometimes caused by motor running too cold, incorrect motor oil or fuel.	1-18-19
3. Dirty containers used for motor oil.	Motor oil should be kept in clean place, and clean containers used when filling motors.	1
4. Oil used more than the recommended length of time.	Change oil at the recommended intervals.	2-3-4
5. Lack of oil.	Keep oil at recommended level	2-3-4
6. Piston rings improperly fitted to piston and cylinder liner.	Install new rings and fit properly.	83
7. Piston rings stuck or broken.	Install new rings.	83
8. Foreign materials entering motor.	Service and inspect air cleaners and pre-cleaners. Proper care of these cleaners is very important.	12-13
9. Loose connections in air system.	All connections must be air-tight.	12-13
10. Loose valve cover.	Any dirt in the valve compartment may enter the crankcase.	
11. Improper fuel.	Use a suitable fuel.	1
E. BURNED PISTON HEADS		
1. Piston pin bushings come loose in connecting rods, closing off oil to spray tip in upper part of rod that cools the pistons.	Install new bushings, with proper fit.	83
2. Motor idles too slow to maintain 5 pounds minimum gauge pressure.	Set idling speed of motor to 450 R.P.M.	45
3. Clogged connecting rod spray nozzle.	Clean spray nozzle.	83
4. Low oil pressure.	Remedy cause of low oil pressure.	25-J
5. Inferior oil causing a deposit on under side of piston head. See Items D-2, 4 & 5 and E-1, 3 & 4 above before blaming oil for this condition.	Obtain satisfactory oil.	1
F. BEARING FAILURE		
1. Unsuitable lubricating oil.	Change to a suitable oil of non-corrosive type, correct grade and viscosity.	1
2. Lack of oil.	Maintain proper oil level.	2-3-4
3. Foreign materials entering motor.	Use clean oil containers when filling motor with oil, and see that air system and gaskets on motor are in good condition.	

Diagnosis	Corrections	Refer to Topic No.
4. Motor runs too hot.	Normal operating temperature 175° to 185° F.	18
5. Restrictions in oil passages.	Clean all oil passages.	85-C
6. Crankshaft bearing journal rough or out of round.	Grind or replace crankshaft.	81
7. Crankshaft out of alignment.	Straighten or install new shaft.	81
8. Bent connecting rod.	Align rod or install new.	83
9. Low oil pressure.	Minimum, 5 pounds at low idle, 25 to 35 at high idle.	25-J
10. Bearing loose.	Install new bearing and tighten cap	82-83
11. Sprung bearing insert.	Install new insert.	82-83
G. BURNED VALVES AND SEATS		
1. Improper (too little) valve lash.	Adjust to .012" lash.	44
2. Weak valve springs.	Install new springs	78
3. Valves sticking in guides.	Clean stems and guides. Install new parts if necessary.	78
4. Valve seats too wide.	Reseat to correct width.	78
5. Overheating motor.	See "Cooling Systems."	18
6. Unsuitable fuel.	Use a fuel of recommended specifications.	1
7. Excessive carbon deposits around seat and valve heads.	Clean and replace; reseat if necessary. All valves must be lapped in.	78
8. Warped valve head.	Install new valve.	78
H. VALVES STICKING		
1. Motor runs too cold.	Operate at 175° to 185° F. temperature.	18
2. Insufficient clearance between valve stem and guide.	Ream guides for proper clearance.	78
3. Weak valve springs.	Install new springs.	78
4. Broken valve springs.	Install new springs.	78
5. Valve stems scored or carboned.	Clean, if necessary install new valve.	78
6. Gummy deposits from inferior fuel or oil.	Clean and use suitable fuel or oil.	1
7. Clogged muffler.	Replace muffler.	
I. EXCESSIVE OIL CONSUMPTION		
1. Piston rings worn or broken.	Install new rings.	83
2. Crankcase gasket leaking.	Install new gasket.	89
3. Rear crankshaft seal leaking.	Install new seal.	81
4. Crankshaft wick carrying too much oil through.	Install new wick.	81
5. Front crankshaft seal leaking.	Install new seal.	81
6. Leaking blower gasket.	Install new gasket.	79
7. Leaking blower seals.	Install new seals.	79

Diagnosis	Corrections	Refer to Topic No.
8. Cylinder walls worn.	Install new liners.	84
9. Excessive ring gap.	Install new rings.	83
10. Overheating	See "Cooling System."	18
11. Rings not seating.	Install new rings.	83
12. Stuck oil rings, clogged drain slots.	Install new rings, clean drain slots in pistons.	83
13. Improper grade or viscosity of oil.	Obtain oil of proper grade and viscosity.	1
14. Oil level too high in crankcase.	Maintain proper oil level.	2-3-4
15. Loose fitting piston pin retainer.	Bend ends of piston pin lock ring to exert more pressure on retainer.	
J. LOW OIL PRESSURE		
1. Insufficient oil in crankcase.	Maintain proper oil level.	2-3-4
2. Motor oil diluted with fuel oil.	Change motor oil and inspect fuel connections on injectors and fuel manifold.	77
3. Clogged oil filter.	Remove and clean element.	10
4. Clogged oil cooler	Remove and clean or replace.	10
5. Clogged oil pump screen.	Remove and clean or replace,	10
6. Worn bearings.	Overhaul motor.	73
7. Defective oil pressure gauge.	Install new gauge.	
8. Defective oil line to pressure gauge.	Repair or install new line.	
9. Leaks—loose connections at oil line or filter.	Tighten connection.	
10. Worn by-pass valve assembly.	Install new parts.	89
11. Worn release valve or spring in oil pump.	Install new parts.	89
12. Defective oil pump or connections.	Repair and install new parts necessary.	89
13. Defective oil passage in motor.	Repair or install new motor block.	85-C
K. OIL AND ENGINE OVERHEATING		
1. Clogged primary oil filter, or clogged oil cooler.	Remove and clean out element with solvent, install new if unable to clean.	10
2. Water level low.	Keep radiator filled.	18
3. Ineffective cooling.	See "Cooling System."	18
4. Insufficient oil.	Maintain proper oil level.	2-3-4
5. Motor oil diluted with fuel.	Change oil and inspect fuel connections on injectors and fuel manifold.	77
L. EXCESSIVE BLACK SMOKE		
1. Improper fuel.	Obtain proper fuel.	1
2. Air cleaner clogged.	Clean central passage in air cleaner and service air cleaner.	13
3. Pre-cleaner clogged.	Remove and clean; if defective install new parts.	12

Diagnosis	Corrections	Refer to Topic No.
4. Too much or too heavy oil in air cleaner.	Fill with proper weight and amount of oil.	13
5. Air box inspection cover leaking.	Tighten or install new gasket.	
6. Plugged air port holes.	Remove cylinder head, blower, inspection covers and clean out port holes.	84-D
7. Air box drain plugged.	Open drain.	85-B
8. Incorrect injector timing.	Time injectors.	42
9. Injectors not equalized properly	Equalize injectors.	42
10. Incorrect valve lash.	Adjust valves .012″ lash.	44
11. Defective injector.	Repair or install new injector.	77
12. Worn rings, piston, or liners.	Install new parts.	83-84
M. EXCESSIVE BLUE SMOKE		
1. Insufficient fuel to injector.	Inspect fuel supply to injectors.	11
2. Injectors not equalized.	Equalize the injectors.	43
3. Cylinder misfiring.	Locate and correct the cause.	11-19, 42-43
4. Defective injectors.	Repair or install new injector.	77
N. IMPROPER FUEL PRESSURE		
1. Fuel pressure too low.	Check for clogged filters or defective fuel pump and repair.	10
2. Fluctuating fuel pressure.	Inspect gauge, dampener and fuel pump.	49, 91
O. ENGINE DETONATES —KNOCKS		
1. Incorrect injector timing.	Time the injectors correctly.	42
2. Injectors not equalized correctly.	Equalize the injectors.	43
3. Incorrect valve lash.	Adjust valve lash to .012″	44
4. Incorrect motor temperature.	Keep temperature 175° to 185° F.	18
5. One or more cylinders misfiring.	Locate and correct cause.	11-19-42-43-44
P. OIL IN AIR BOX		
1. Blower gasket leaking.	Install new gasket.	79
2. Blower seals leaking.	Install new seals.	79
3. Piston pin retainers loose.	Lock-ring not tight against retainer.	83
4. Piston rings worn or broken.	Install new parts.	83
5. Air box drain tube clogged.	Clean tube.	85
Q. NOISY OPERATION		
1. Worn blower drive shaft.	Install new drive shaft.	80
2. Loose rotor shafts (Blower).	Install new rotors.	79
3. Worn bearings (Blower).	Install new bearings.	79
4. Scored lobes and housing (Blower).	Remove and repair blower.	79
5. Worn blower gears.	Install new gears.	79
6. Worn or broken timing gears.	Install new.	80
7. Broken piston.	Install new.	83
8. Burned or warped valve.	Install new.	78

Diagnosis	Corrections	Refer to Topic No.
R. FLUCTUATING FUEL PRESSURE		
1. Dirt in relief valve.	Remove and clean relief valve.	91
2. Insufficient fuel supply.	Fill fuel tank.	
3. Worn body, rotor or vanes.	Install new parts.	91
S. NO SPARK AT THE ELECTRODES OF AIR HEATER		
1. Ignition switch defective.	Install new switch.	
2. Wiring defective.	Install new.	
3. Coil points defective or burned.	Condition with ignition file.	48
4. Coil points stuck.	Free points.	48
5. Ignition points shorted, porcelain cracked or broken.	Install new porcelain.	48
6. Improper gap.	Adjust gap to 1/8"	48
7. Sludge or oil on points.	Clean points.	48
T. FUEL NOT DELIVERED TO IGNITION CHAMBER — AIR HEATER		
1. Spray nozzle clogged	Clean nozzle.	48
2. Pump piston leather dry.	Install new leather.	48
3. Pump piston leather worn.	Install new leather.	48
4. Pump inlet line cracked or broken.	Repair or install new.	48
U. ENGINE RUNS UNEVENLY AND VIBRATES EXCESSIVELY		
1. Incorrect injector timing.	Time injectors.	42
2. Injector not equalized.	Equalize the injectors.	43
3. Spray tip burned off—not atomizing fuel properly.	Install new spray tip.	77
4. Spherical valve and spring assembly inoperative.	Repair, install new parts needed.	77
V. LOW ENGINE R.P.M.		
1. Governor control rod improperly adjusted.	Adjust rod to proper length.	46
2. Fuel and air shut-off improperly adjusted.	Make proper adjustment.	46
3. Binding or damaged linkage.	Repair, install new parts needed.	46-93
W. POOR BURNING FUEL. (PRE-HEATER)		
1. Spray tip clogged.	Remove and clean.	47
2. Needle valve clogged.	Remove and clean.	47
3. Improper fuel.	Use a good clean fuel, same as used in tractor.	1
4. Low air pressure.	Operating pressure is from 80 to 100 pounds.	47
5. Not the right air mixture.	Regulate intake air cover for proper burning.	47
6. Filter clogged.	Install new filter.	47
7. Water in fuel and frozen.	Thaw out and drain, fill with proper fuel.	47
X. LOW FUEL PRESSURE		
1. Clogged line.	Clean or install new line.	

Diagnosis	Corrections	Refer to Topic No.
2. Broken line.	Repair or install new line.	
3. Fuel low in tank.	Fill tank.	
4. Damaged gauge.	Install new gauge.	
5. Air leak in fuel system, between fuel tank and fuel pump.	Tighten all connections. (Do not overlook this kind of leak. When motor is not running it will not leak fuel, but air will be drawn in when motor is running.)	
6. Damaged restriction unit.	Install new unit.	
7. Wornor sticking by-pass valve in transfer pump.	Repair.	91
8. Worn transfer fuel pump.	Repair.	91
9. Clogged filters.	Install new filters.	11
10. Improper fuel.	Use correct fuel.	1
Y. HIGH FUEL PRESSURE		
1. Damaged gauge.	Install new gauge.	
2. Transfer pump by-pass assembly is improperly installed.	Change to opposite side.	91
3. Transfer pump by-pass spring damaged.	Install new spring.	91
4. Clogged fuel return elbow.	Remove and clean.	
Z. PRESSURE HAND VIBRATES EXCESSIVELY		
1. Damaged gauge.	Install new gauge	
2. Damaged dampener.	Install new unit.	46
3. Worn transfer pump assembly.	Repair.	91
4. Air leak in fuel line or in filters between transfer pump and fuel tank.	Tighten all connections. (Do not overlook this kind of leak. When motor is not running it will not leak fuel, but air will be drawn in when motor is running.)	

26 -- Ammeter

A. DOES NOT REGISTER		
1. Damaged ammeter.	Install new ammeter.	
2. Loose connections.	Tighten connections.	
3. Generator brushes sticking.	Free brushes or install new ones.	96
4. Generator brushes worn.	Install new brushes.	96
5. Voltage regulator defective.	Repair or install new regulator.	96
6. Dirty generator armature.	Clean armature.	96
7. Worn or burned commutator.	Turn down and undercut armature or install new.	96
8. Worn armature shaft.	Have shaft built up or install new.	96
9. Short or open circuits in field or armature of generator.	Have generator rewound or install new.	96
10. Generator belt off or too loose.	Install new belt or adjust.	50

Diagnosis	Corrections	Refer to Topic No.
B. REGISTER TOO HIGH		
1. Generator field grounded.	Locate for external ground; and correct.	96
2. Regulator defective.	Repair or install new regulator.	96
C. UNSTEADY HAND		
1. Low brush tension.	Adjust or install new brush spring.	96
2. Brushes sticking	Clean brushes.	96
3. Burned commutator bars.	Recondition in lathe, undercut commutator, solder loose connections.	96
4. High mica on commutator.	Undercut mica.	96
5. Commutator out of round.	Recondition in lathe.	96
6. Rough, dirty or greasy commutator bars.	Clean commutator bars.	96
7. Loose connection at terminal post.	Tighten connection.	96

27 -- Air Heater

A. INOPERATIVE		
1. Worn contact points in switch.	Check for loose connections or install new switch.	48
2. Leak at heater pump.	Install new leathers.	48
3. No fuel from pump.	Loose lines or defective leathers. Install necessary new parts.	48

28 -- Temperature Gauge

A. INOPERATIVE		
1. Broken.	Install new gauge.	

29 -- Hour Meter

A. DOES NOT REGISTER		
1. Loose wire connection from ammeter, ground or pressure switch.	Tighten connections	66
2. Pressure switch out of adjustment.	Adjust switch.	66
3. Defective works in meter.	Install new meter.	66

30 -- Final Drive

A. OIL LEAK, OUTER SEAL		
1. Bearing out of adjustment.	Adjust bearing.	109-B
2. Defective boot.	Install new boot.	108-109
3. Seal boot torn loose.	Remove and repair.	108-109
4. Seal ring worn.	Install new seal ring.	108-109
5. Seal ring stuck on hub.	Clean and replace.	108-109
6. Bearing plate worn.	Install new bearing plate.	108-109-110

Diagnosis	Corrections	Refer to Topic No.
B. NOISE IN FINAL DRIVE GEAR ASSEMBLY		
1. Bearings out of adjustment.	Adjust bearings.	109-B
2. Pinion bearings worn or broken.	Install new bearings.	108-109-110
3. Final drive gear worn badly or broken.	Install new gear.	108-109-110
4. Pinion gear worn badly or broken.	Install new pinion.	108-109-110
5. Low on oil.	Fill with oil to proper level.	2-3-4
C. EXCESSIVE WEAR ON SPROCKETS		
1. Tracks run too loose.	Adjust tracks.	119-D
2. Tracks worn out.	Install new tracks.	116-D
3. Stabilizer crank assemblies worn or damaged.	Build up and grind to size or install new parts.	112
4. Truck wheels badly worn.	Rebuild or install new truck wheels.	122
5. Rear axle bracket, loose or worn.	Tighten, build up or install new parts.	108-109-110
6. Truck frame twisted, loose or broken.	Dismantle, repair and rebuild	120
7. Front idler out of line.	Adjust idler by shimming.	61-A
8. Final drive bearings loose, or damaged.	Maker proper adjustments. Install bearings if damaged.	108-109-110
D. FINAL DRIVE HOUSING		
1. Damaged or broken housing.	Repair or install new housing.	108-109-110
2. Oil leak at inner gasket.	Inspect for loose bolts, damaged side plate or damaged gasket. Make repairs needed.	108-109-110
E. FINAL DRIVE BEARING ADJUSTING CLAMP NUT		
1. Unable to hold adjustment.	Follow proper adjustment procedure	60
F. REAR AXLE BRACKET SPACER		
1. Loose bracket.	Use heavy duty socket wrench to tighten bolts.	108-109-110
2. Worn spacer	Install new spacer.	108-109-110

31 -- Stabilizer Crank Assembly

A. TRACKS RUN OUT OF LINE		
1. Link bushings worn.	Install new bushings	112-113-114
2. Link shaft worn.	Repair and install new bushings.	112-113-114
3. Cranks worn.	Build up or install new stabilizer cranks.	112-113-114
4. Bushings worn in track release assembly.	Install new bushings.	112-113-114
5. Too much end clearance in link shaft and links.	Repair or install new links and shaft.	112-113-114
6. Bolts loose in end of link shaft.	Install new lock, if bolt is damaged install new bolt.	112-113-114
7. Bolt loose in ends of crank assembly.	Install new lock, if bolt is damaged install new bolt.	112-113-114
8. Damaged seal on crank assembly.	Install new seal.	112-113-114

Diagnosis	Corrections	Refer to Topic No.
9. Damaged grease fittings.	Install new fittings.	112-113-114
10. Thrust washers worn in link shaft and crank assembly.	Install new thrust washers.	112-113-114

32 -- Stabilizer Spring Assembly

A. FRONT END OF TRACTOR TOO LOW

1. Spring leaves broken.	Dismantle spring assembly and re build with new spring leaves.	115
2. Pivot shaft worn badly or broken.	Repair or install new shaft.	115
3. Pivot shaft bushing in spring assembly worn.	Install new bushing.	115

33 -- Steering Clutch

A. STEERING CLUTCH SLIPS, OR DOES NOT HOLD

1. Friction discs worn.	Install new discs.	105-106-107
2. Springs too weak.	Install new springs	105-106-107
3. Steel discs warped.	Install new steel discs.	105-106-107
4. Oil on clutch discs.	Wash clutches, according to instructions.	63-A-4
5. Steering clutch controls out of adjustment.	Adjust to proper clearances.	55-56

B. STEERING CLUTCHES SHIFT SIDEWISE ON CLUTCH SHAFT

1. Adjusting nuts loose on clutch shaft.	Tighten nuts, and on the late type be sure the clutches are equally spaced.	105-106-107
2. Bevel gear bearings loose.	Adjust bearings to proper clearance	102-103-104

C. UNABLE TO RELEASE CLUTCHES

1. Steering clutch controls out of adjustment.	Adjust controls to proper clearance	55-56
2. Steering clutch throwout bearings worn or broken.	Install new bearings and check to see that grease tube is in good condition.	105-106-107
3. Throwout fork equalizer loose.	Tighten bolt; if lost, replace parts needed.	105-106-107
4. Throwout fork out of equalizer sockets.	Install fork in equalizer.	105-106-107

D. SHORT LIFE ON STEERING CLUTCHES

1. Clutches are not handled properly by operator.	Instruct operators in proper use of clutches.	15
2. Clutches run with improper adjustments.	Adjust to proper clearances.	55-56
3. Improper brake adjustment.	Adjust brakes.	57-58-59

E. STEERING CLUTCH DOES NOT DISENGAGE

1. Bind in brake controls.	Free binding parts and lubricate with light oil.	

Diagnosis	Corrections	Refer to Topic No.

34 -- Steering Clutch Brakes

A. BRAKES DO NOT HOLD		
1. Brake lining worn.	Install new lining.	105-106-107
2. Improper brake adjustment.	Adjust brakes.	57-58-59
3. Oil on brakes.	Wash brakes and repair oil leak.	63-A-4
4. Brake band broken.	Install new band and adjust.	105-106-107
5. Broken controls.	Install new parts.	105-106-107
B. BRAKES GET HOT		
1. Brakes adjusted too tight.	Adjust brakes to proper clearances.	57-58-59
2. Steering clutch does not disengage.	Adjust steering clutch.	57-58-59
3. Oil on brake lining.	Wash brakes and clutches and repair oil leak.	63-A-4
4. Bind in brake controls.	Free controls and lubricate with light oil.	
C. BRAKE LINING WEARS EXCESSIVELY		
1. Improper brake adjustment.	Adjust to proper clearance.	57-58-59
2. Brake controls bind and hold brake on.	Free controls and lubricate with light oil.	
3. Operator does not handle brakes according to instructions.	Instruct operator in proper use of brakes.	15
D. BRAKE PEDALS WORK UP AND DOWN WHEN TRACTOR IS IN MOTION		
1. Driven hub warped, causing brake drum to run out of line.	Machine face or install new hub.	105-106-107
2. Worn or damaged brake drums.	Repair or install new parts.	105-106-107
3. Final drive pinion bearings worn or broken.	Install new bearings.	105-106-107
4. Loose driven hub on pinion.	Tighten pinion nut.	105-106-107
5. Keys in pinion and driven hub binding.	Remove and correct.	105-106-107

35 -- Transmission (and Gear Shift Mechanism)

A. GEARS DISENGAGE WHEN IN OPERATION		
1. Shifting lever does not lock in position.	Correct cause	102-103-104
B. GEARS NOT IN FULL MESH WHEN IN OPERATION		
1. Shifter fork lock bars worn.	Repair or install new parts	102-103-104
2. Shifter fork worn or damaged.	Repair or install new parts	102-103-104
3. Gear shifter locks worn, or springs weak.	Install new parts.	102-103-104
4. Shifter controls not properly adjusted.	Adjust controls for proper mesh.	102-103-104
5. Worn or broken bearings.	Install new bearings.	102-103-104
6. Nut loose on top shaft.	Inspect lock and install necessary new parts.	102-103-104
7. Cages loose on top shaft.	Tighten capscrews.	102-103-104

Diagnosis	Corrections	Refer to Topic No.
C. GEARS HARD TO SHIFT		
1. Oil in transmission too heavy.	Drain and fill with recommended lubricant.	1
2. Worn shifting controls.	Repair or install new parts	102-103-104
3. Master clutch brake out of adjustment.	Adjust to proper clearance.	74-75-76
4. Lining on master clutch brake worn out.	Install new lining.	100-101-102
5. Lining torn loose on master clutch disc.	Install new clutch disc assembly.	100-101-102
6. Burred gears.	Repair or install new parts.	102-103-104
D. GEAR AND BEARING FAILURES		
1. Oil in transmission low.	Keep filled with oil to proper level	2-3-4
2. Wrong kind of oil used.	Use recommended lubricant.	1
3. Foreign material in oil.	Drain, flush and fill with correct lubricant.	1-2-3-4
4. Operator clashes gears.	Transmission gears should be stopped by master clutch brake before gears mesh. Adjust brake to the proper clearance.	74-75-76
E. NOISE IN TRANSMISSION		
1. Bevel gear and bevel pinion not in proper mesh.	Adjust to proper clearance.	102-103-104
2. Bevel gear bearings out of adjustment.	Adjust to proper clearance.	102-103-104
3. Bearing worn or broken.	Install new bearing.	102-103-104
4. Gears badly worn.	Install new gears.	102-103-104
5. Bevel pinion shaft worn or twisted.	Install new pinion.	102-103-104
6. Reverse and top transmission shaft worn or twisted.	Install necessary new parts.	102-103-104
7. Foreign material in oil.	Drain, flush and fill with clean lubricant.	2-3-4
8. Broken or damaged transmission case.	Repair or install new case.	102-103-104

36 -- Truck Wheels

A. EXCESSIVE WEAR ON FLANGES		
1. Truck frame out of line.	Straighten or rebuild.	120
2. Front idler out of line.	Adjust idler.	61
3. Stabilizer cranks and links worn or damaged.	Repair or install new parts.	112-113-114
4. Final drive sprocket bearings out of adjustment.	Adjust bearings.	109-B
5. Track rail assembly badly worn.	Repair or install new track rail.	119
6. Tracks run too loose.	Adjust tracks.	119

Diagnosis	Corrections	Refer to Topic No.
B. TRUCK WHEEL BEARING FAILURE		
1. Foreign material in lubricant because of carelessness when servicing.	Keep lubricant clean, use clean containers and be clean about servicing.	1
2. Not using an approved truck wheel lubricant.	See Allis-Chalmers approved list.	1
3. Truck wheel not lubricated frequently enough.	GREASE LUBRICATED WHEELS—Lubricate every 1000 hours of operation. OIL LUBRICATED WHEELS —Lubricate every 200 hours of operation.	2-3-4

37 -- Support Rollers

A. EXCESSIVE WEAR ON FLANGES		
1. Truck frame out of line.	Straighten or rebuild frame.	120
2. Front idler out of line.	Adjust idler.	61
3. Stabilizer crank and links worn or damaged.	Repair or replace worn or damaged parts.	112-113-114
4. Tracks run too loose.	Adjust tracks.	119
5. Final drive sprockets bearings out of adjustment.	Adjust bearings.	109-B
6. Track rail assembly badly worn.	Repair or install new track rail.	119
B. OIL LEAKS		
1. Damaged or worn seals.	Install new seals.	108-109-110
C. BEARING FAILURE		
1. Foreign material in lubricant because of carelessness when servicing.	Keep lubricant clean, use clean containers and be clean about servicing.	8
2. Not using an approved lubricant.	See Allis-Chalmers approved list.	1
3. Support roller not lubricated frequently enough.	GREASE LUBRICATED ROLLERS—Lubricate every 1000 hours of operation. OIL LUBRICATED ROLLERS —Lubricate every 200 hours of operation.	2-3-4

38 -- Front Idler

A. EXCESSIVE WEAR ON FLANGES		
1. Track frame out of line.	Straighten or rebuild frame.	120
2. Stabilizer crank and links worn or damaged.	Build up, or install new parts.	112-113-114
3. Final drive sprocket bearings out of adjustment.	Adjust bearings.	109-B
4. Track rail assembly badly worn.	Repair or install new track rail.	119
5. Tracks run too loose.	Adjust tracks.	119

Diagnosis	Corrections	Refer to Topic No.
B. FRONT IDLER LEAKS OIL		
1. Damaged or worn seals.	Repair idler wheel, install new seals and other parts needed.	122
C. BEARING FAILURE		
1. Foreign material in lubricant because of carelessness when servicing.	Keep lubricant clean, use clean containers and be clean about servicing.	7
2. Not using an approved lubricant.	See Allis-Chalmers approved list.	1
3. Front idler not lubricated frequently enough.	GREASE LUBRICATED IDLERS—Lubricate every 1000 hours of operation. OIL LUBRICATED IDLERS —Lubricate every 200 hours of operation.	2-3-4

39 -- Tracks

A. EXCESSIVE WEAR ON PINS, BUSHING AND RAILS		
1. Drive sprocket bearings loose.	Adjust bearings.	109-B
2. Rear axle bracket worn, loose or damaged.	Repair or install new parts needed.	108-109-110
3. Bushings in track release housing badly worn.	Install new bushings.	112-113-114
4. Stabilizer cranks worn or damaged.	Build up or install new parts.	112-113-114
5. Stabilizer link bushings worn.	Install new bushings.	112-113-114
6. Bolts in end of stabilizer crank and link shaft are loose.	Tighten bolts using new locks; if bolts are damaged install new bolts.	
7. Front idler running out of line.	Adjust front idler by adding or removing shims.	61
8. Truck frame damaged or broken.	Repair or install new parts needed.	120
9. Badly worn truck wheels.	Repair or install new truck wheels.	121
B. PARTS OF TRACKS WORN		
1. Worn pins and bushings, but rails in good condition.	Pins and bushings may be turned: if badly worn, new pins and bushings should be installed.	119
2. Badly worn pins, bushings and rails.	Install new track rail assembly.	119

40 -- Track Release Assembly

A. TRACKS RUN OUT OF LINE		
1. Stabilizer crank bushings badly worn.	Install new bushings.	112-113-114
2. Bolt in stabilizer crank, outer end, loose or damaged.	Repair or install necessary new parts.	112-113-114
B. RELEASE MECHANISM DOES NOT FUNCTION PROPERLY		
1. Cross head becomes tight in housing.	Remove, clean, lubricate with oil worn or damaged parts.	116-117-118

Diagnosis	Corrections	Refer to Topic No.
2. Worn or damaged mechanism.	Repair or replace; fill with oil to proper level.	116-117-118

41 -- Truck Frame

A. EXCESSIVE WEAR ON TRACKS, TRUCK WHEELS, FRONT IDLERS AND DRIVE SPROCKETS

1. Bent, twisted or broken channels.	Repair or install new channel.	120
2. Loose or broken rear axle bracket.	Repair or install new parts. Use heavy duty wrenches to tighten bolts.	108-109-110

B. TRACKS RUNNING OUT OF LINE

1. Twisted or broken truck frame.	Repair or install new parts.	120

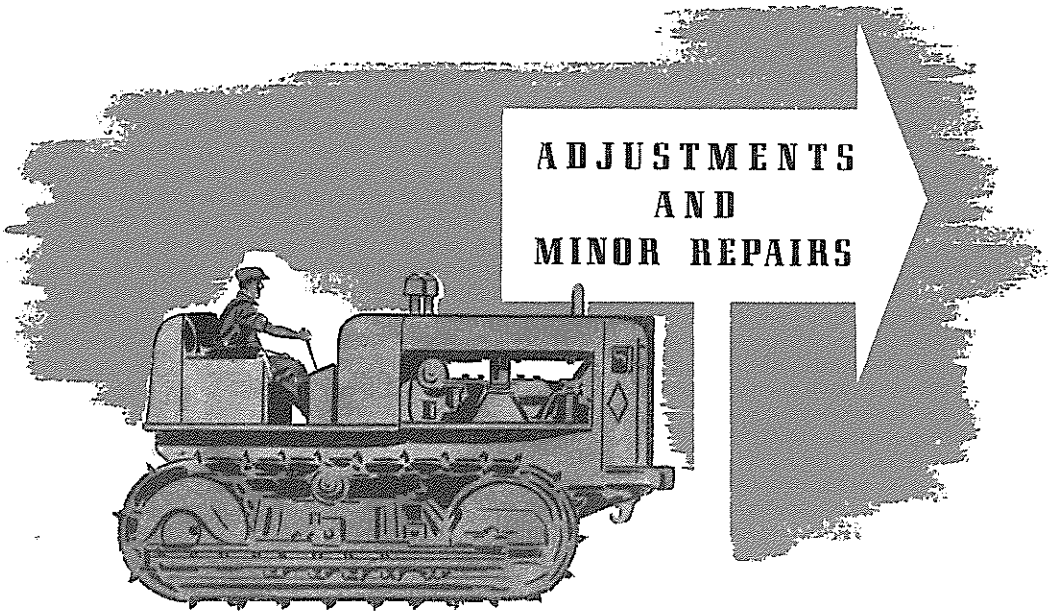

SAFETY:

Broken or worn out tools cause mashed fingers, bruised knuckles and many other serious injuries. See that the tools you use are in good condition.

ADJUSTMENTS AND MINOR REPAIRS

42 -- Injector Timing

The timing of an injector consists of properly locating the top of the plunger follower in relation to the injector body. This must be done separately for each injector after it has been installed in the engine.

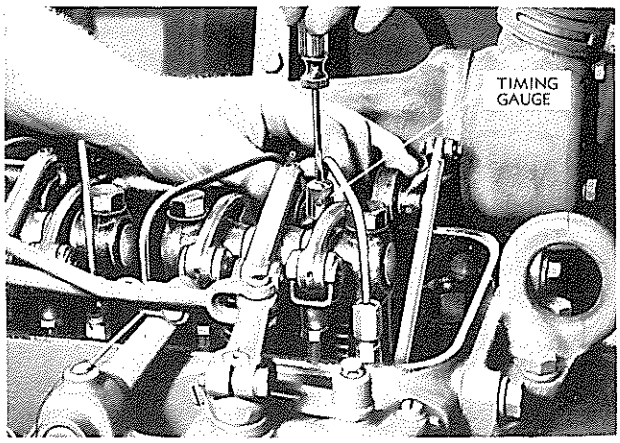

FIG. 1

1. Remove cylinder head cover.
2. Rotate engine until both valves of the same cylinder are down (fully opened).
3. Place timing gauge in hole of injector body. Adjust push rod so it is just possible to turn shoulder of gauge over the top of follower without lifting gauge. Tighten locknut on push rod and inspect adjustment to be sure it remained unchanged. This operation must be repeated for each injector.
   NOTE: When inspecting timing, hold the gauge vertical. Be sure there is no dirt or obstruction in the hole in the injector body. When gauge with the sliding sleeve (2nd type) is used, adjust the push rod so the sleeve comes flush with the top of the center pin.
   When the top surface of the threaded sleeve (3rd type) is flush with the top of the pin injector it is properly timed. This is determined when the marks "C" on the sleeve and pin line up.
4. Injector timing must be inspected whenever an injector is removed and replaced.

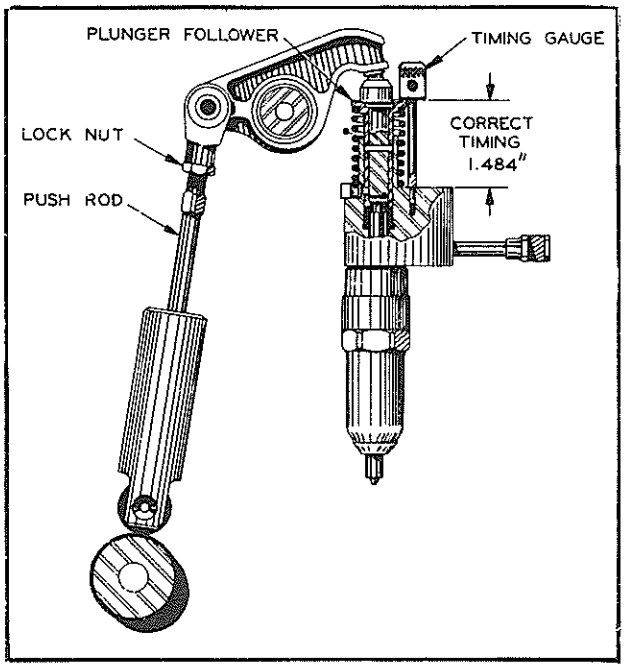

FIG. 2

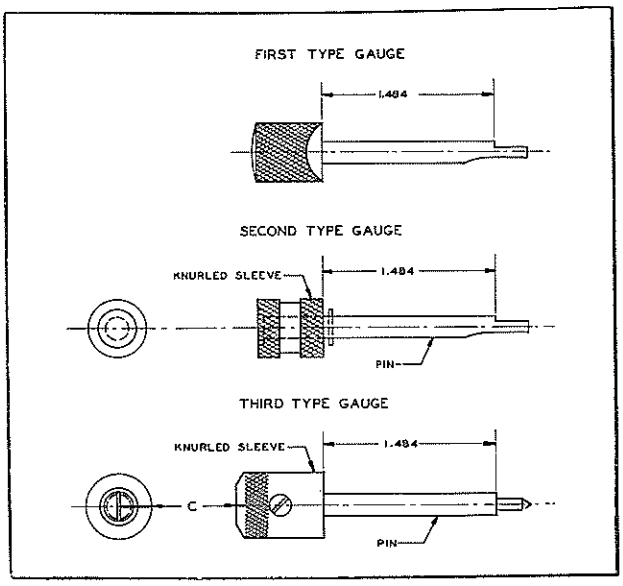

FIG. 3

43 -- Equalizing Injectors

Following are directions for equalizing the injectors:

1. Remove link pin from governor control lever.
2. Be sure all control rack levers are engaged with the injector control racks.
3. Loosen adjusting screws on all control rack levers and be sure the levers are free on the shaft and the shaft free in the bearings.
4. Injectors must be timed before being

equalized.

5. Set engine "shut-off" in running position.
6. Pull throttle all the way back.
7. Push control tube lever toward water manifold as far as possible and hold firmly in this position.
8. Adjust inside screw on number 1 rack control lever so it pulls control tube lever hole 1/64" past hole in governor control link. Lock control lever in this position by tightening outside screw on lever.

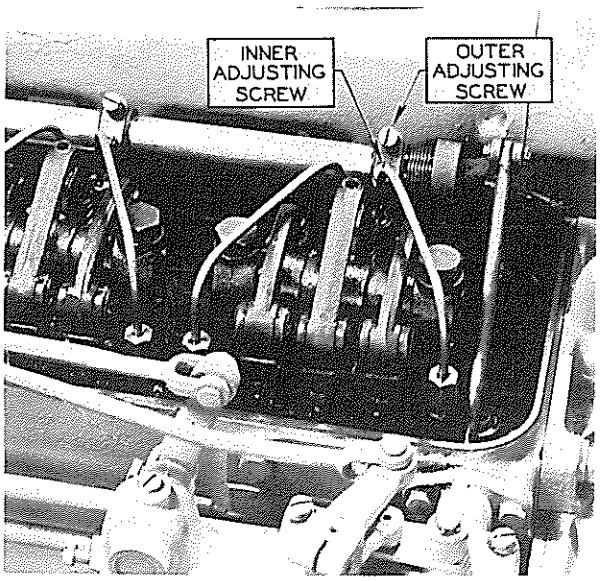

FIG. 1

9. Using a medium sized screwdriver, turn inner screw on number 2 rack control lever in until a pressure is felt on control tube lever. Now back screw out until this pressure is relieved (this is done to be sure that there is no binding between rack control lever and control tube). With screwdriver held lightly in finger tips turn screw in again until a slight pressure is felt on screwdriver. Turn in and out a few times in order to set screw at the exact position where pressure starts. Now lock by tightening outer screw.

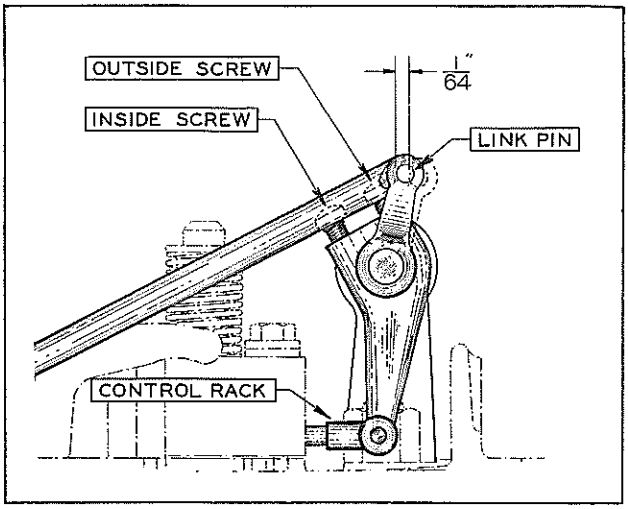

FIG. 2

10. Adjust remaining rack control levers as described.
11. Still holding control tube lever in position as described in paragraph #7, inspect control racks. These racks, when rack control levers are adjusted properly will all be tight. If any should be found loose at this point readjust by loosening outer screw and tightening inner screw. (Do not change adjustment of #1 rack control lever.)
12. Replace pin in governor control link and control tube lever. Secure same with cotter pin.
13. Do not attempt to obtain a smooth running motor, by changing control rack adjustment individually without regard to this method of equalizing.

44 -- Valve Lash

Owing to the high compression in this engine, it is very important that the correct valve lash be maintained. Too little clearance will cause a loss of compression, missing cylinders, and eventual burning of valves and seats. Too much clearance will result in noisy operation especially at idling speeds.

The valves should be adjusted to give .009" clearance between the valve stem and the rocker arm. This must be done with the engine at recommended operating temperature.

1. To adjust valves, rotate engine with starter until the injector is at the bottom of its stroke.
2. Use a .009" thickness gauge and adjust each push rod until gauge will just pass

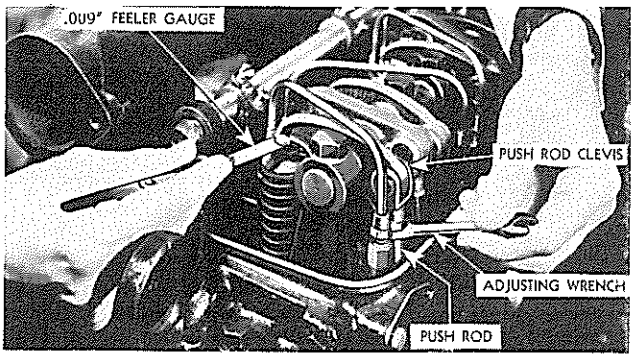

FIG. 1

between valve stem and rocker arm with a slight drag.

3. Repeat this operation for each cylinder.
   CAUTION: If for any reason a push rod has been disconnected from a rocker arm, care must be taken to have the push rod screwed entirely through the clevis before any attempt is made to rotate engine. If the valve is held down owing to the push rod being adjusted too long, it will be damaged by the piston and necessitate replacement.

45 -- Governor

Governor faults are usually manifest in speed variations of the engine, but it does not necessarily mean that all such speed variations indicate governor faults. Therefore, when improper speed variations appear, the following procedure should be carried out.

A. CAUSES FOR SPEED VARIATIONS

1. Be sure that the speed changes observed are not the result of load fluctuations.
2. If the load is uniform, carefully inspect the engine and be sure that all cylinders are firing properly.
3. See that no bind exists in the governor mechanism or operating linkage between governor and engine; also that no bind is manifest in the injector control rack shaft or its mounting brackets.
4. Inspect ball thrust bearing for wear or improper assembly.

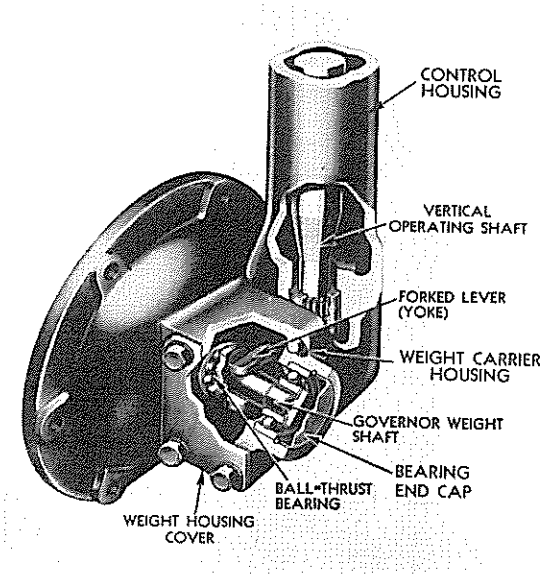

FIG. 1

5. If the engine races (beyond governor control) remove the hand hole covers on the left hand side of the cylinder block and inspect for an accumulation of oil in the airbox. If this condition exists clean the drain tubes. Refer to Topic 85B.
   The injectors will all have to be removed and tested as the tips may be burned off. Refer to Topic 77.

B. LOCATING CAUSE OF GOVERNOR NOT OPERATING PROPERLY

1. Injector racks may stick or move too hard. This may be due to the injector hold-down clamp being too tight or not positioned properly and can often be eliminated by tapping the foot of the clamp lightly with a small hammer and a long punch. An injector which has been in service a long time may get sticky due to an accumulation of gum and sludge. This can be corrected by washing in a pail of clean fuel oil.
2. Injector rack may stick due to being cramped by the rack control lever. Loosen the screws in the rack control lever. If this relieves the binding move the lever endwise on the control shaft until the rack control lever no longer cramps the injector rack. Cocking of the rack control lever may also be due to damage to the ends of the adjusting screws or the surfaces which they contact, and may be corrected by filing. After the trouble has been remedied, the injector must again be equalized.
3. Control shaft may stick or turn hard in its small ball bearings. These bearings must be free from chips, dirt, or sludge, and must be lubricated. Binding due to poor alignment of the bearing supports can be corrected by loosening the bearing support capscrews and re-aligning the bearing supports. When the injector rack control shaft is free of bind and while operating the injector racks, the shaft should return freely to the "no fuel" position by the shaft return spring only. Any time the control shaft bearing suports have been loosened, the injectors must be equalized.
   CAUTION! Never stretch or tamper with rack control spring to change the tension. If spring is not standard, install a new one.
4. Control shaft may have too much friction due to control shaft spring being bent. Install a standard spring.
5. Pin in link connecting governor to control shaft may be binding in the control shaft lever. Free pin.
6. Having made the above inspection, if the governor still fails to control the engine properly, a complete governor overhaul is

necessary. See Topic 93.

7. The full load speed adjustment is made at the factory and must not be changed in the field. However, if the engine is not

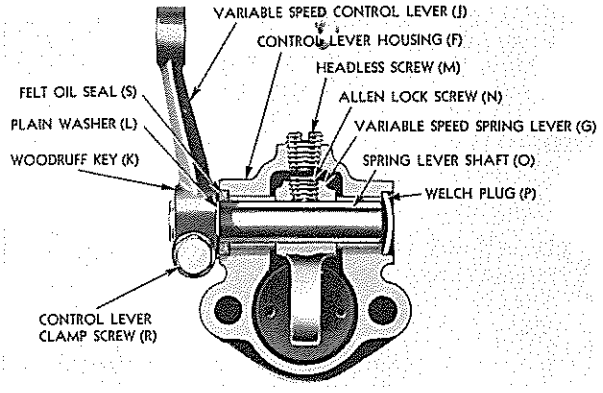

FIG. 2

running at rated speed, (at high idle), inspect variable speed control lever as it may be turning on shaft. Remove headless screw "M" in top of housing and tighten Allen lock screw "N", holding lever on shaft. Shaft, lever and lock-screw may be worn to the extent that new parts should be installed. If this variable speed control lever is all right, see that throttle control rod is pulling the variable speed control

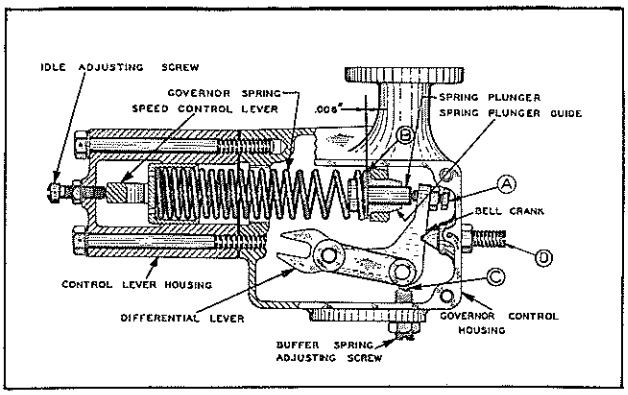

FIG. 3

lever back to the wide open position. If not, adjust by means of adjustable yoke. If it becomes necessary to change the idling speed, start the engine and operate until it has reached the normal operating temperature. Loosen the lock nut on the adjusting screw and turn the screw "IN" (clockwise) for higher speeds, or "OUT" (counter clockwise) for slower speeds until the desired speed is obtained; the correct idling speed is 450 r.p.m. Inspect the fuel lines and fuel filters, and make sure that all motor adjustments are properly set.

46 -- Fuel Shut-Off and Air Valve Control

Provided fuel oil pressure is normal, a loss of power in the engine is an indication that the fuel shut-off and air valve control linkage is incorrectly adjusted.

Inspect and adjust as shown below:

A. FIRST TYPE CONTROL

1. INSPECTION.
   a. With shut-off control knob pushed in and locked in running position, pin on bottom of governor fuel shut-off lever should contact rear end of slot in governor shut-off lever stop.
   b. Pull shut-off control knob to OFF position and see that pin is now contact-

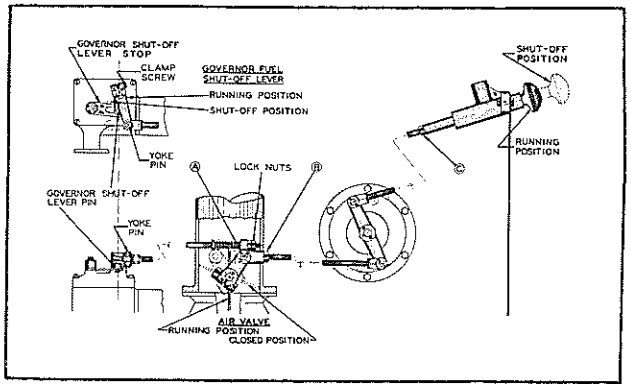

FIG. 1

ing forward end of slot in governor shut-off lever stop. If pin stops at some intermediate position in slot, inspect fuel shut-off lever and linkage for binding and fuel shut-off lever for slippage on shaft.
   c. Start engine and allow to run at full speed. Disconnect rod from fuel shut-off lever and hold shut-off lever in running position. Now pull shut-off control knob to OFF position thus closing the air valve. Engine should immediately stop. If engine continues to run it is an indication that air valve is not being held completely closed with knob in OFF position and linkage should be adjusted.

If air valve is found to be out of adjustment adjust it as follows:

2. ADJUSTMENT.
   a. Disconnect rod from air valve arm at "A" and move arm forward until it comes to a definite stop. Air valve is now closed.
   b. Pull shut-off control knob out until it locks in OFF position. Adjust linkage at "B" or "C" until rod can be reconnected at "A" with air valve in closed

position (arm forward). Make sure that air valve is held completely closed with shut-off control knob in OFF position and that all lock nuts on linkage are tightened securely.

c. Back off fuel "shut-off" adjustment nuts to end of rod and tighten. Push control knob in as far as it will go where it will lock in RUNNING position.

d. Loosen the clamp screw on the governor fuel shut-off lever. Position lever pin until it contacts the rear end of the slot in the governor shut-off lever stop. Tighten the clamp screw. After all adjustments have been completed, inspect the set-up again as outlined in the first three steps.

B. SECOND TYPE CONTROL

1. With the shut-off knob pushed into running position, see if the shut-off lever stop assembly is in position as shown. The ball in the stop assembly should be centered in the hole in the shut-off lever as shown. If not, the shut-off knob is probably contacting the dash. To adjust, remove pin "A" and move shut-off lever until the ball is centered in the front hole in the shut-off lever. Now adjust linkage at "B" until

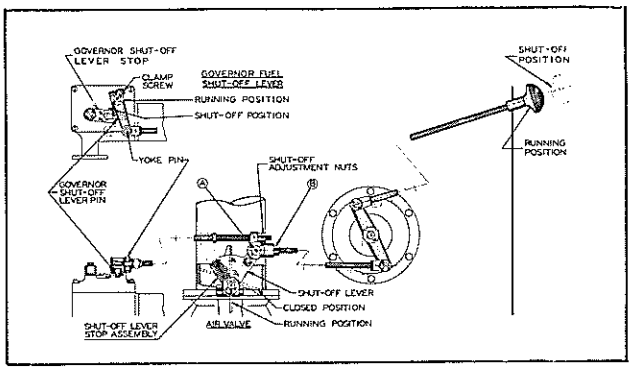

FIG. 2

the rod can be reconnected at "A". Now inspect the shut-off lever in running and closed position to make certain that the ball in the stop assembly is centered in both positions.

2. With the linkage set in running position, see that the governor shut-off lever pin contacts the rear of the slot in the shut-off lever stop. If not, back off fuel "shut-off" adjustment nuts to end of rod and tighten lock nut. Loosen clamp screw on the governor fuel shut-off lever and position the lever pin until it contacts the rear end of the slot; tighten the clamp screw.

47 -- Engine Pre-Heater

A. REPAIRING ENGINE PRE-HEATER

1. Blower fan not working.
   a. Make sure the insulated wire to the fan motor is properly connected to the source of electricity.
   b. Make sure sufficient and solid ground connections have been established.
2. Fuel not being delivered from spray nozzle.
   a. No fuel in fuel chamber. Fill ½ to 2/3 full of fuel oil.

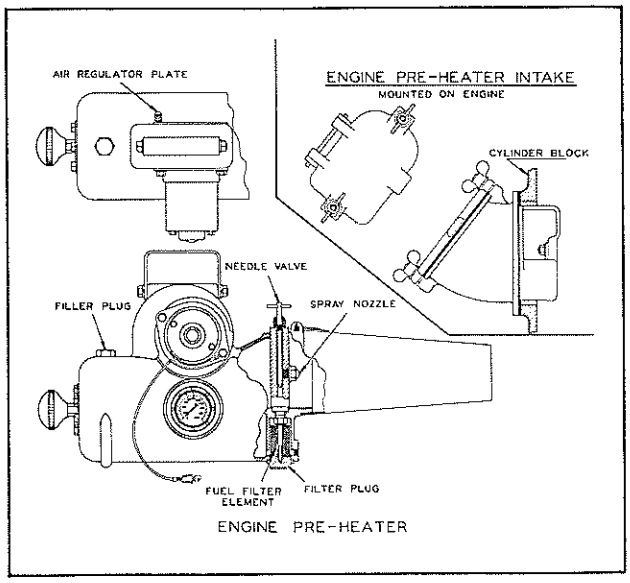

FIG. 1

   b. No pressure in fuel chamber. Pump up to 120 pounds pressure. Inspect for leaks.
   c. Spray Nozzle may be clogged.
      (1) Unscrew nozzle assembly and remove.
      (2) Remove the vortex plug in center of nozzle. Wash parts in clean fuel oil and dry with compressed air. Do not clean nozzle with drill bit or steel wire as this will damage the nozzle and render it useless.
      With spray nozzle removed, determine if the fuel filter element is clogged. Pump up to the 120 pound pressure and open the fuel needle valve. If a good flow of fuel is evident, the filter is free of obstruction.
   d. Fuel Filter Element clogged.
      (1) Remove the filter plug and the filter element.
      (2) If filter element cannot be cleaned satisfactorily, install a new filter element being careful to seat it properly at both ends. Replace filter plug.
   e. Before installing the spray nozzle, pump up the pressure and open the needle valve to wash out any foreign material in the passage to the nozzle. Close the valve and install the cleaned spray nozzle.

48 -- Air Heater

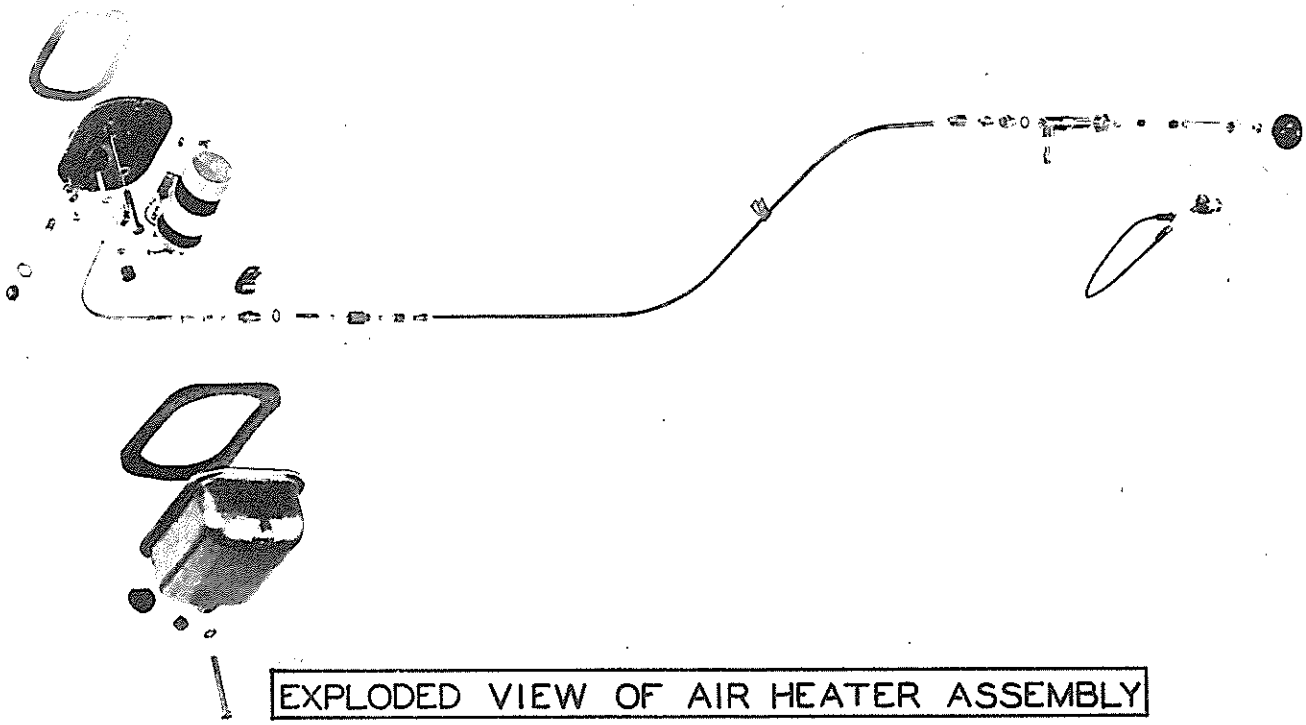

FIG. 1

A. VIBRATOR NOT WORKING

Key or dashlight switch must be "On" before air-heater can be used. The vibrator should buzz audibly when heater switch button is pressed. If no buzz can be heard look for these causes:

1. Lack of current being supplied to coil.
2. Vibrator points struck. The points (on top of coil under the cover) will probably free up if top of coil is rapped gently with the butt of a screw driver.
3. Vibrator points burned or fused. Examine by removing top of coil and inspect points. If they are burned, recondition with ignition file or install a new coil assembly.

B. SYSTEM MAY BE SHORTED AT IGNITION POINTS

1. Inspect porcelain for cracks or breaks.
2. Spark gap may be improperly set. This should be set to ⅛" plus or minus 1/64". In adjusting this gap, bend the grounded electrode to give proper gap. Do not attempt to move or bend the insulated electrode, for to do so would result in breakage of the porcelain.
3. Sludged or oily ignition points.

C. FUEL OIL NOT BEING DELIVERED TO IGNITION CHAMBER OF HEATER

1. The spray nozzle of the heater may be clogged. This would be indicated by excessive pressure on the pressure pump, or by failure of the nozzle to atomize the fuel. To clean, proceed as follows:

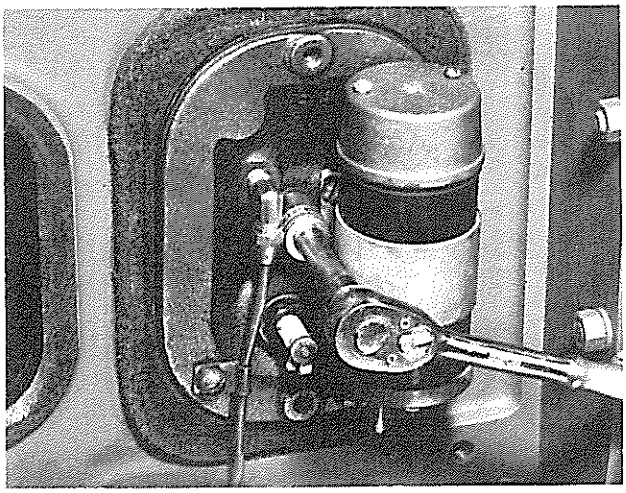

FIG. 2

   a. Remove both electrodes and unscrew nozzle assembly using a 5/8" thin-walled socket.
   b. Remove nozzle filter spring and vortex plug in center of nozzle. Wash parts in clean fuel oil and dry with compressed air. Do not clean nozzle with drill bit or steel wire as this will damage the nozzle and render it useless.
   c. Reassemble, taking care that no dirt enters assembly. Be sure nozzle gasket does not leak.
2. Pump piston leather may be dry. This condition is liable to occur if the tractor

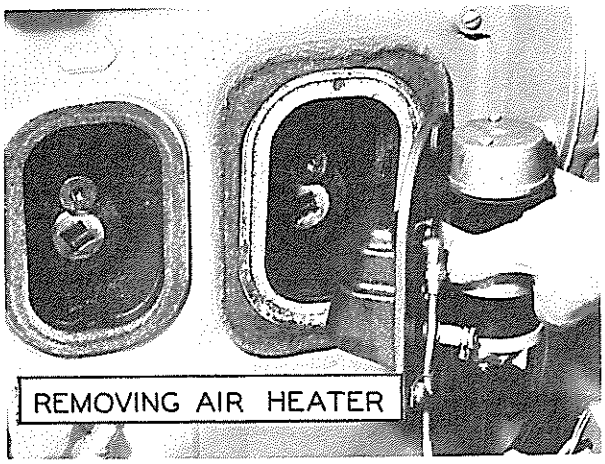

FIG. 3

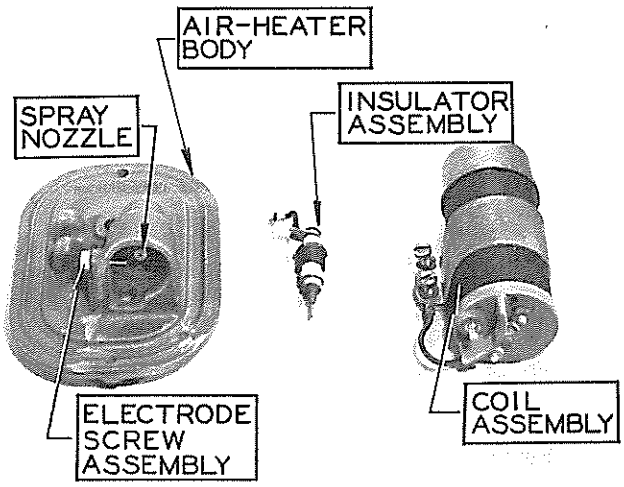

FIG. 4

has remained inoperative for a considerable period of time. It would be detected by a lack of pressure on the plunger when it is stroked. In this case, the leather must be replaced.

3. Pump leather worn or damaged. This also would be indicated by lack of pressure when the plunger is stroked and would require replacement of the leather. To install leathers, proceed as follows:
   a. Remove nut on outside of panel and withdraw plunger assembly.
   b. Remove retaining screw on end of plunger and remove leathers.
   c. Install new leathers and run retaining screw up tight. Use a few drops of oil to facilitate entering the assembly back into cylinder. Be careful that the edges of the entering leather are not torn or cracked in entering.
4. The inlet line to the heater pump may be loose or broken.

49 -- Dampener for Fuel Pressure Gauge

The dampener, installed on back of fuel pressure gauge, is designed to eliminate vibration of the recording hand of gauge.

HD Series Tractors manufactured prior to March 12, 1941 were not equipped with a fuel gauge dampener. Installation of this dampener can be easily made on tractors not so equipped.

For the HD-14 model, order #043952 dampener only.

For the HD-7 and HD-10, order the #043952 dampener and one each #907059 street ell and #040740 female coupling.

50 -- Generator Belt

To adjust the generator belt, loosen the capscrews in the generator adjusting link. Move the generator in or out as necessary to correct the adjustment and tighten capscrew. The adjustment is correct when the belt has about 1 inch slack measured halfway between the pulleys. Too tight a belt will cause bearing failure and undue wear on belt.

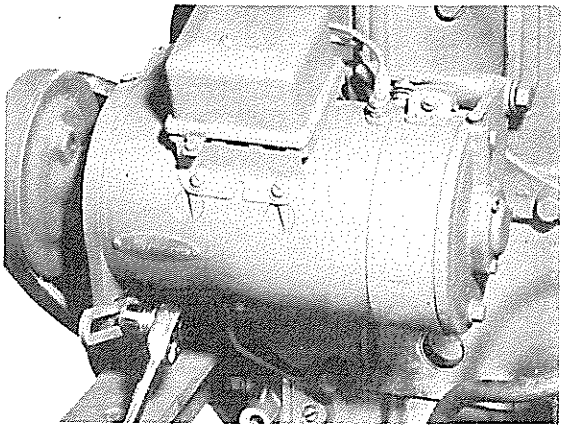

FIG. 1

51 -- Fan Belt

To adjust the fan belts, loosen the large nut at the rear end of the fan shaft and loosen the lock nut on the adjusting screw. Turn the hand screw clockwise to tighten the belts. Tighten large nut securely, then tighten the top lock nut. This nut merely holds the adjusting screw from turning after the belts have been adjusted. The belts have about 1¼" slack measured halfway between the two pulleys when correctly adjusted. Bearing failure may result from running fan belts too tight.

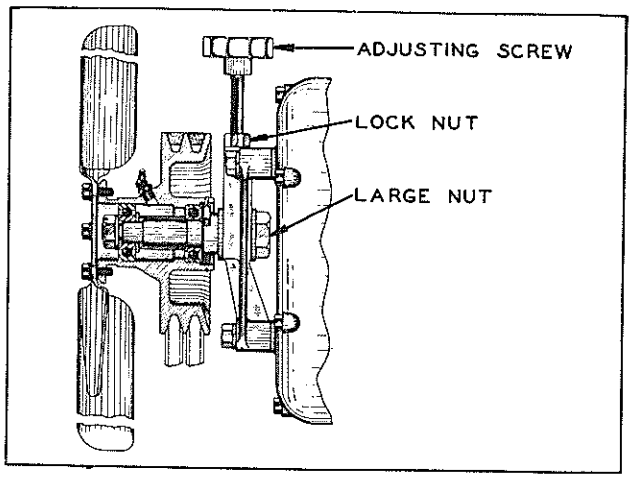

FIG. 1

52 -- "HD 7" Master Clutch

A. MASTER CLUTCH ADJUSTMENT

1. The master clutch, when in proper adjustment, engages with a snap and the control lever locks into position with an over-center action. When this action is not present, it indicates that the clutch should be adjusted before slippage occurs. The tractor should never be operated with the clutch slipping.
2. To adjust master clutch, remove the spacer housing inspection cover.
3. Disengage master clutch and revolve the clutch until locking lug is located near the inspection hole.
4. Disengage locking lug from the slot in the adjusting ring.
5. With a bar, pry on the adjusting ring; to tighten the clutch turn the ring clockwise and to loosen the clutch, turn the ring counter-clockwise.
6. Lock the ring in place by engaging the locking lug into the nearest slot in the adjusting ring.
7. Refer to Topic 74 B-9 for adjustment of Master Clutch Brake.

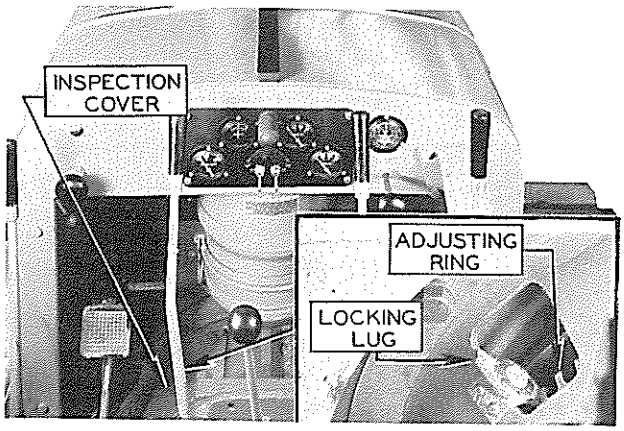

FIG. 1

53 -- "HD 10" Master Clutch

A. MASTER CLUTCH ADJUSTMENT

1. The master clutch, when in proper adjustment, engages with a snap, and the control lever locks into position with an over-center action. When this action is not present, it indicates that the clutch should be adjusted before slipping occurs. The tractor should never be operated with the clutch slipping. This clutch is an over-center, cam engaging type with screw thread adjustment between adjusting ring and back plate.
2. To adjust master clutch, remove the master clutch inspection cover from the top of the transmission housing.
3. Disengage master clutch and revolve the clutch until adjusting lock on the adjusting ring is located near the inspection hole.
4. Disengage the adjusting lock from the slots in the back plate.
5. With a hammer, tap on the lugs on the adjusting ring to tighten or loosen the clutch; to tighten the clutch, turn the ring clockwise, to loosen the clutch, turn the ring counter-clockwise.
6. Lock the ring in place.
7. Refer to Topic 75 B-10 for adjustment of Master Clutch Brake.

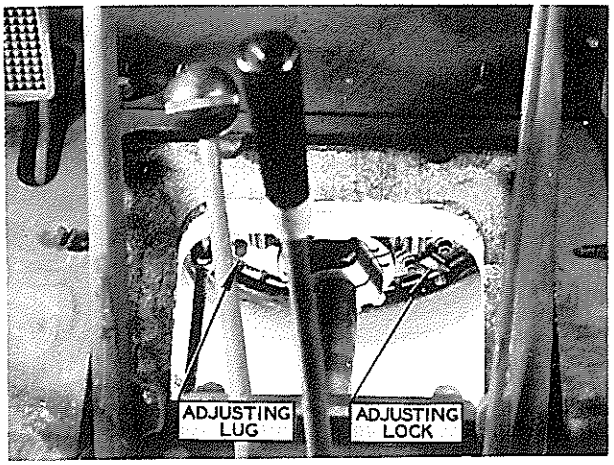

FIG. 1

54 -- "HD 14" Master Clutch

A. MASTER CLUTCH ADJUSTMENT

1. The master clutch, when in proper adjustment, engages with a snap and the control lever locks into position with an over-center action. When this action is not present, it indicates that the clutch should be adjusted before slippage occurs. The tractor should never be operated with the clutch slipping. This clutch is an over-center, cam engaging type with screw thread adjustment between adjusting ring and back plate.
2. To adjust master clutch, remove the master clutch inspection covers from the right side of the spacer housing between the motor and the transmission housing.
3. Disengage master clutch and revolve the clutch until adjusting lock on the adjusting ring is located near the inspection hole.
4. Disengage the adjusting lock from the slots in the back plate.
5. With a bar, pry on the lugs on the adjusting ring; to tighten the clutch, turn the ring clockwise and to loosen the clutch, turn the ring counter-clockwise.
6. Lock the ring in place.
7. Refer to Topic 76 B-5 for adjustment of Master Clutch Brake.

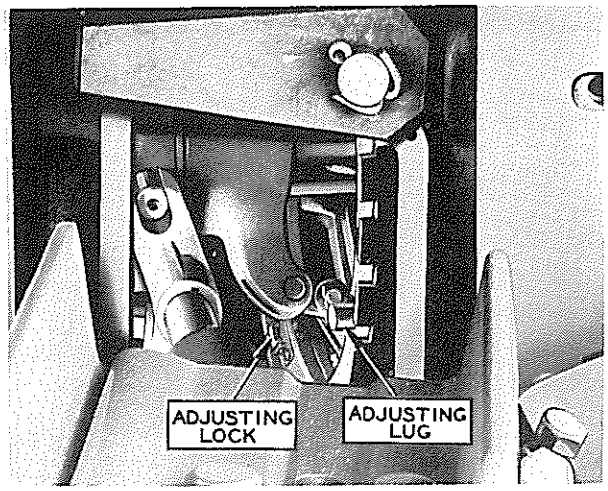

FIG. 1

55 -- "HD 7" Steering Clutch

A. STEERING CLUTCH ADJUSTMENT

1. Place a ruler against the dash so that it projects horizontally past the top of the steering clutch lever. Then pull the lever back until the lost motion is taken up. This can easily be determined by a definite increase in resistance offered by the lever. Observe the measurement from the dash to the top of the lever when it is in this position. Subtract from this measurement, the measurement from dash to top of lever when lever is in extreme forward position. The difference between these two measurements should never be less than 3" nor more than 5". This portion of the lever movement is referred to as "free motion.".

   If the free motion of the lever does not fall within the limits of 3" to 5", correct the adjustment as follows:

2. Remove the steering clutch inspection cover. The clearance at "H", figure 2, should be 1/8" with steering clutch lever in extreme forward position. To make this adjustment, remove the yoke pin, loosen the jam nut and turn adjusting rod in the direction necessary to bring this measurement. Tighten the jam nut.

   Next, loosen the lock nut on locking bolt and turn the adjusting screw until the top of the steering clutch lever has 5" of free motion. Tighten nut on locking bolt. Replace inspection cover.

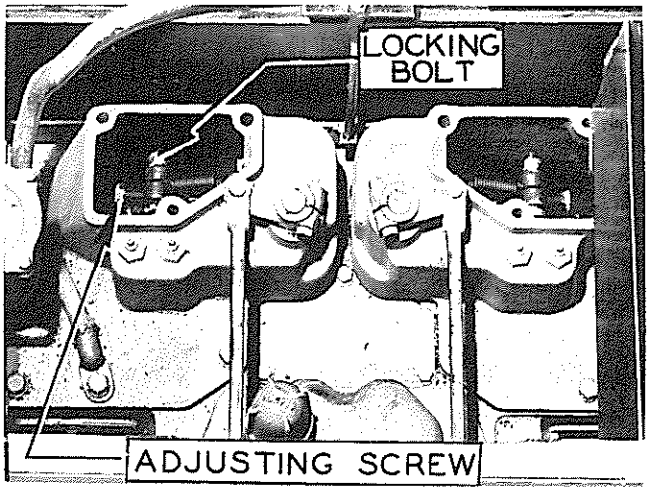

FIG. 1

3. Note that as the steering clutches wear, the free motion of the thrust pin diminishes. Unless proper adjustment at this point is maintained, the throwout bearings will ride against the shifter plate and, consequently, will become overheated and wear rapidly. Also, the pressure on the shifter plate will allow the steering clutch to slip, developing excessive heat and wear.

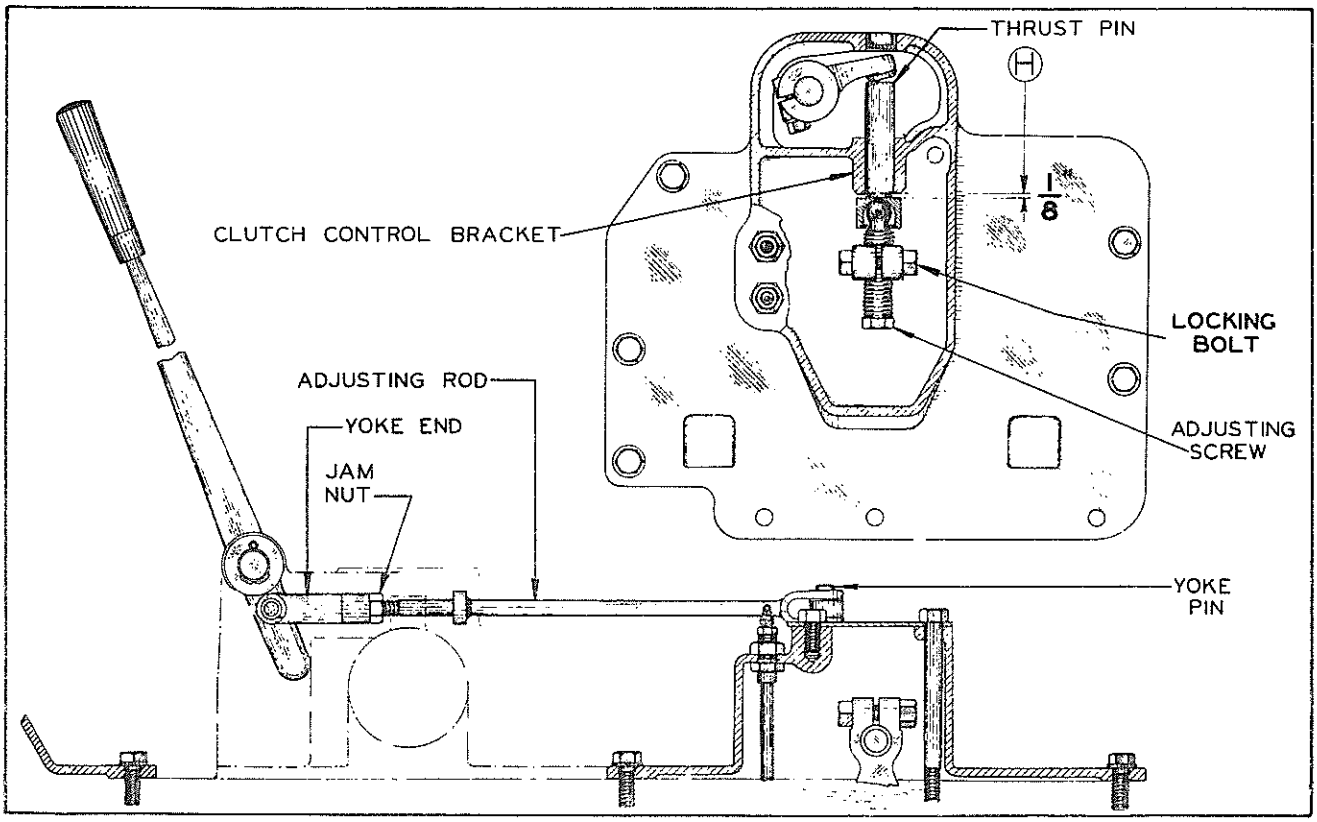

FIG. 2

56 -- "HD 10" and "HD 14" Steering Clutches

A. INSPECTING CLUTCH ADJUSTMENT

Inspect each clutch lever for adjustment separately. Perform the following steps to determine whether steering clutch needs adjusting.

1. Place one end of a ruler or scale against the dash so it projects horizontally past the top of the steering clutch lever.
2. Push the lever forward as far as it will go; at this point the bottom end of the lever strikes a stop on the gear shifter housing and prevents it from going too far forward.
3. Pull the lever back until the lost motion is taken up. This can easily be felt by a definite increase in the pull required to move the lever.
4. Observe the measurement of the distance between the dash and the top of the lever when it is in its forward position, and also the distance when the lever is pulled back to the position where the lost motion is all taken up. The free motion or difference between these two measurements should not be less than 3" and not more than 5". As the steering clutches wear, the free motion of the levers becomes less. If the free motion of the levers does not come within the limits of 3" to 5", then proceed with adjustment.

B. ADJUSTMENTS

1. Remove steering clutch vent cover.
2. Inspect and adjust clearance between bell crank and steering clutch cover when the steering levers are as far forward as they will go. This clearance (A) Figure 1 should be ⅛". If this clearance is maintained, there will always be sufficient clearance between the throwout bearings and the shifter plate when the top of the steering levers and top of the throwout fork have the proper free motion. If there is not ⅛" clearance, proceed as follows to correct the adjustment.
   (a) Push the steering clutch lever as far forward as it will go and hold it in that position.
   (b) Loosen the jam nut and turn the adjusting capscrew in until the end of bell crank is moved away from the bracket ⅛". Tighten jam nut.

   NOTE: This adjustment is very important and should be made carefully. If there is not any clearance at (A), it is possible for the clutch throwout bearings to ride against the shifter plate even though the steering clutch levers have proper amount of free travel.
3. Measure distance (B) between top of throwout fork and inner edge of steering clutch cover (steering levers held forward). Then pull steering lever back to end of its free travel or the point where pressure is felt and disengagement of clutch begins. Hold lever in that position and measure distance "C" (between top of throwout fork and inner edge of steering clutch cover). This distance should be 3/16" less than distance "B". This 3/16" free travel of top of throwout fork can be obtained by loosening nut on lock bolt and turning adjusting screw in or out to decrease or increase the distance "C". When the 3/16" free travel is obtained, tighten nut on lock bolt. The steering clutch lever should now have 5" of free travel at the top of steering lever before disengagement of clutch begins.

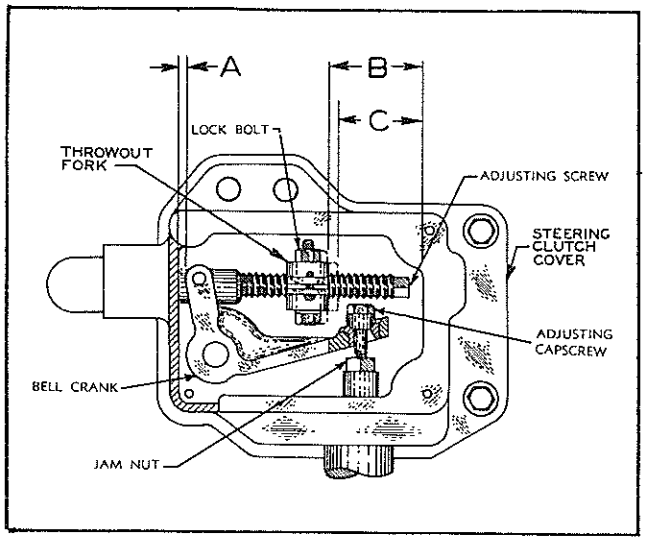

FIG. 1

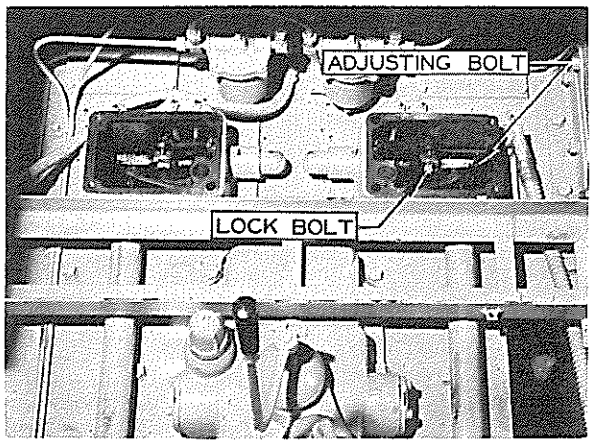

FIG. 2

57 -- "HD 7" Steering Brakes

Before adjusting the brakes, inspect the steering clutch adjustments. Tightening the brakes will not correct the steering of the tractor if the steering clutches are not adjusted for proper clearance and release. See Topic 55.

A. BRAKE ADJUSTMENT

1. Remove the brake hole cover.
2. Tighten the adjusting nut so that the brake pedal will come within one inch of the floor when locking the brake drum. CAUTION: Always turn adjusting nut ½ or one full turn at a time to lock the nut in position.
3. Adjust screw in the bottom of the transmission case, until it presses the brake band against the brake drum, then loosen the adjusting screw ½ turn for proper clearance.

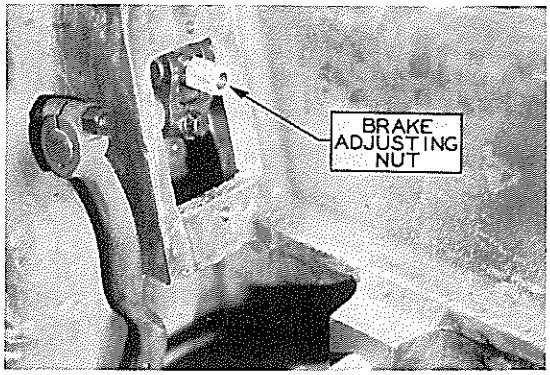

FIG. 1

58 -- "HD 10" Steering Brakes

A. BRAKE ADJUSTMENT

1. Due to normal wear on the brake linings, it will be necessary to adjust the brakes as wear occurs. The brake band is of one piece construction with two adjustments provided. The adjusting nut positions the

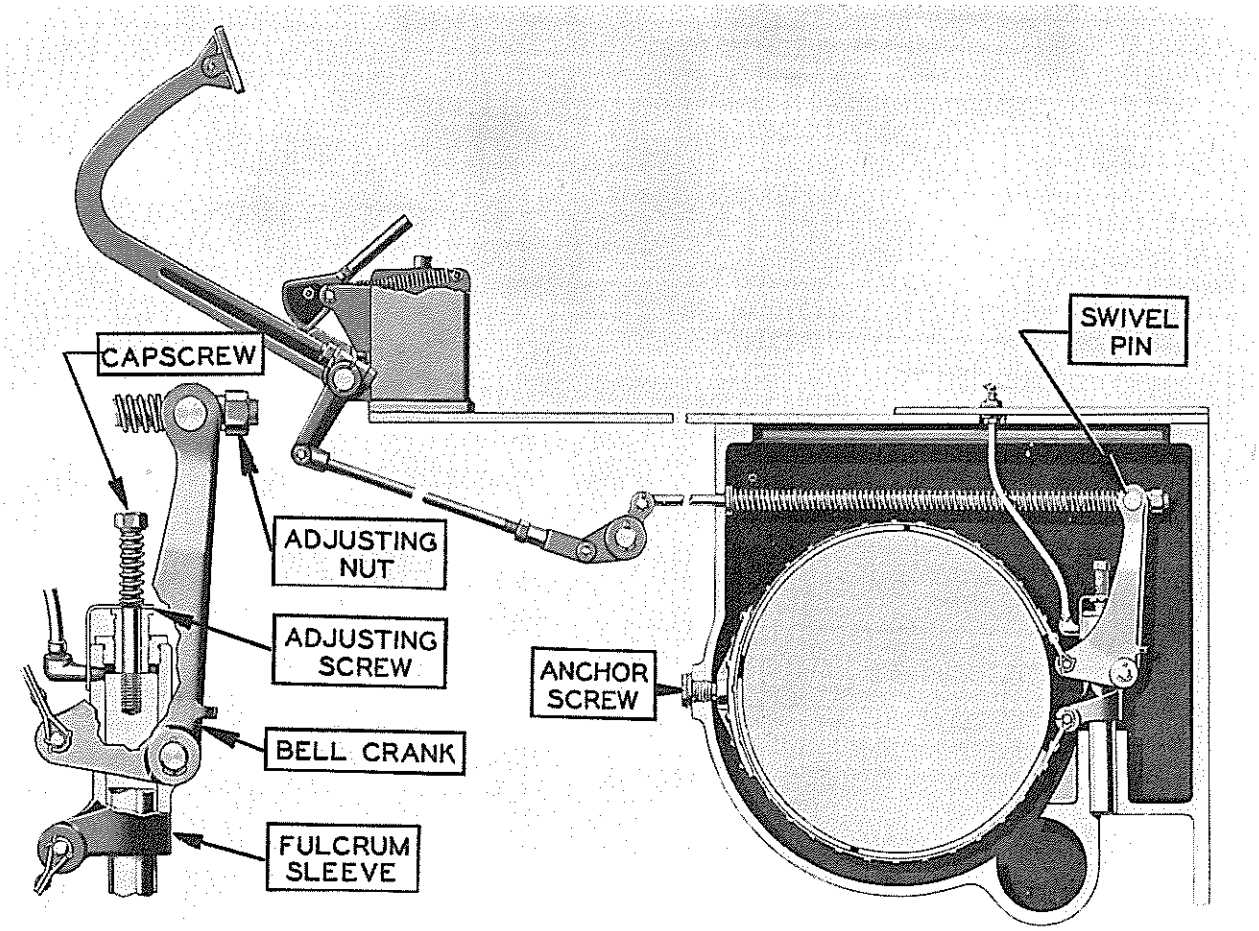

FIG. 1

top half of band and the adjusting screw positions lower half of band.

NOTE: IT IS VERY IMPORTANT THAT BOTH ADJUSTING NUT AND ADJUSTING SCREW BE USED WHEN MAKING AN ADJUSTMENT.

2. Remove the cover plate from the rear of transmission case. Always adjust adjusting screw FIRST. Turn in on adjusting screw until a clearance of 1/64" is obtained between the lower half of the band and the drum with the brake released.

   CAUTION: Do not disturb the setting of the capscrew extending through the "adjusting screw."
3. Next adjust the upper half of the band by tightening adjusting nut. The nut should be tightened until the top half of brake band is drawn down to within 1/64 of top of brake drum.
4. After completing adjustment of top half of band, again inspect clearance between lower half of band and brake drum. If this clearance has decreased it is an indication that top half of band is adjusted too tightly.
5. Because of the construction of this assembly the upper half of the band always contacts the drum first when the brakes are applied with the proper adjustments. Therefore any additional strain imposed on this band due to improper adjustment would soon result in excessive wear.

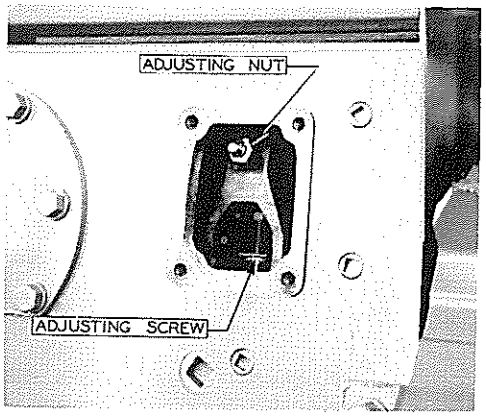

FIG. 2

6. NEVER try to adjust the brakes by tightening "adjusting nut" without first tightening "adjusting screw." To do so will cause the upper half of the band to take the entire braking action which will cause rapid wear.
7. When adjusting the brakes after installing new linings, proceed as outlined above.

59 -- "HD 14" Steering Brakes

A. BRAKE ADJUSTMENT

1. Remove the seat cushion and the brake cover plates.
2. Tighten the adjusting nut until the brakes are properly adjusted. Never adjust the nut so there is less than 4" of free motion in the foot pedal. CAUTION: WHEN TIGHTENING THIS NUT, ALWAYS TURN IT ONE-HALF (½) TURN AT A TIME.
3. Before adjusting the brake bands, inspect the steering clutch throwout mechanism for proper clearance and equalization of the amount of release for each steering clutch. Tightening the brakes will not correct the steering of a tractor on short turns, unless the steering clutches release properly. See Steering Clutch Adjustment, Topic 56

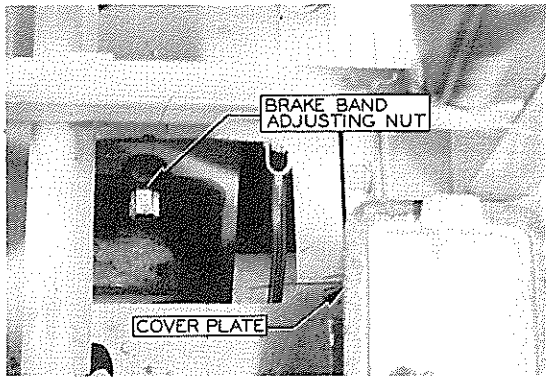

FIG. 1

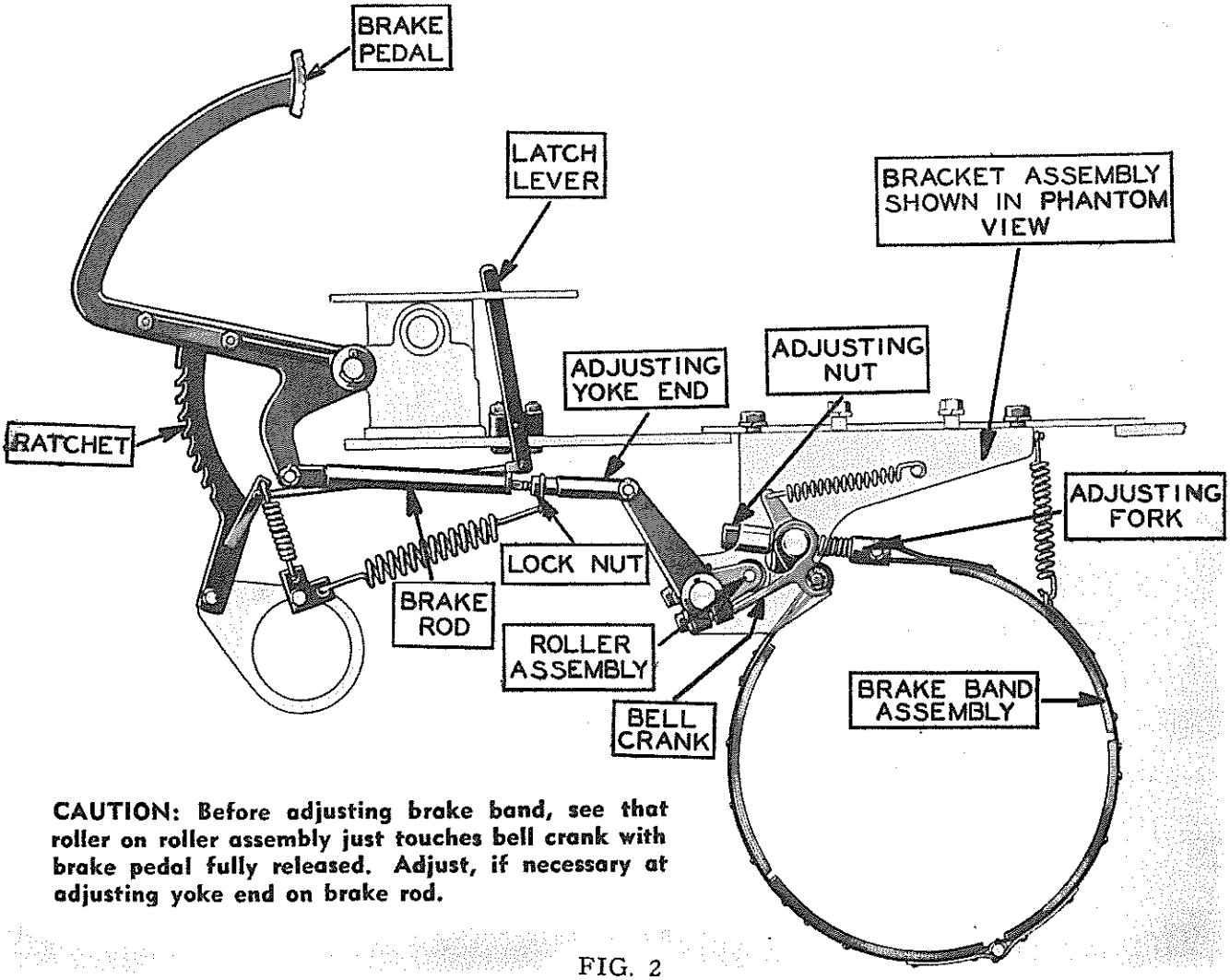

CAUTION: Before adjusting brake band, see that roller on roller assembly just touches bell crank with brake pedal fully released. Adjust, if necessary at adjusting yoke end on brake rod.

FIG. 2

60 -- Sprocket Shaft Bearings

A. SPROCKET SHAFT BEARING ADJUSTMENT

1. Loosen the clamp screw in the clamp nut only enough so that the nut can be turned.
2. Using a four foot extension on the wrench tighten the nut until the bearings are tight.
3. Back off the clamp nut 1/6 of a turn for bearing clearance; re-tighten the clamp screw securely using an extension on the Allen-head wrench.

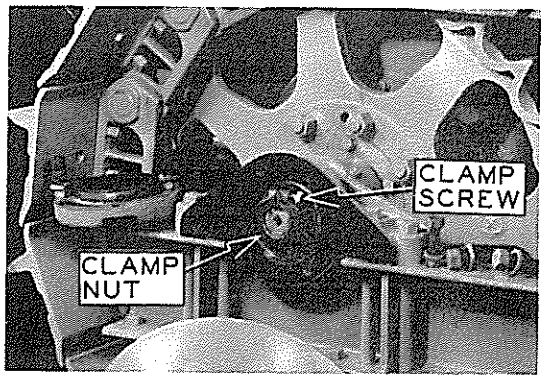

FIG. 1

61 -- Front Idler and Tracks

A. TRACK ADJUSTMENT

1. Tracks should not be run tight, as this will cause rapid wear. The track adjustment is correct when the track can be lifted 1½" to 2" above the track support roller. Tracks should not be allowed to run too loose, for there is danger of damaging the final drive case and pinion bearing cover.
2. To adjust the tracks, loosen the clamp bolts and turn the adjusting screw until the tracks are properly adjusted to the dimensions above. Turning the adjusting screw clockwise or counter-clockwise forces the release yoke backward or forward, thus loosening or tightening the track.
3. The shims provide means for keeping the front idlers in proper alignment. If the idlers are not kept in alignment, the tracks will ride on one flange or the other causing that side to wear rapidly.
4. To adjust the idler alignment, loosen the clamp bolts and the track adjusting screw. Remove shims from one side and insert in the other side as the case requires in order to bring the idler into proper alignment with the track.

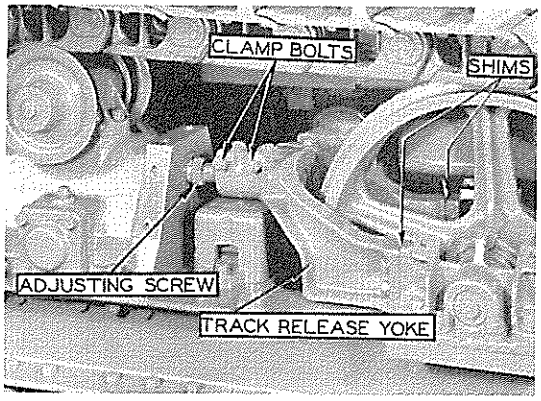

FIG. 1

NOTE: When loosening the clamp bolts, loosen them only enough so that the adjusting screw can be turned with the track wrench. If the clamp bolts are loosened too much, the threads on screw and in idler yoke will become damaged, and the track cannot be held in proper adjustment.

62 -- Master Clutch Irregularities and Corrections

A. CLUTCH SLIPS

1. May be improperly adjusted. Refer to Topics 52, 53 and 54 "Master Clutch Adjustment."
2. Lining may be worn or glazed. Install new drive disc or lining after removing the motor.

B. CLUTCH WILL NOT ENGAGE

1. Lining may be torn off driving plate and wedged between pressure plate and flywheel. Install new drive disc.
2. Adjusting lock may have become loose and allowed the adjusting ring to tighten. CORRECTION: Refer to Topics 52, 53 and 54 "Master Clutch Adjustment."

C. CLUTCH HARD TO OPERATE "HD 7"

1. Clutch mechanism may be dry. CORRECTION: Lubricate with light motor oil either by spraying oil on actuating levers with a rose gun, or by splashing a quart of oil over the clutch and letting it drain out the bottom of the housing. This must be done WITH THE CLUTCH ENGAGED.
2. Actuating mechanism may be clogged with dust and dirt. CORRECTION: Wash clutch out as follows:
   a. Place ½" pipe plug in drain hole at left rear of clutch housing.
   b. Remove inspection hole cover and pour about three gallons of fuel oil or cleaning fluid into clutch compartment.
   c. With gears in neutral and clutch engaged, start motor. Run motor for five minutes without disengaging clutch, then drain dirty fuel oil or cleaning fluid out by removing ½" pipe plug.
   d. Again place the ½" pipe plug in drain hole. Pour about three gallons of fuel oil or cleaning fluid into clutch housing and operate motor as before with gears in neutral. Engage and disengage master clutch several times while motor is running; then stop motor and drain fuel oil.
   e. Lubricate throwout bearing thoroughly.
   f. Oil mechanism as directed in paragraph (1).
3. Insufficient grease on throw-out bearing. CORRECTION: Lubricate as directed.

D. CLUTCH HARD TO OPERATE "HD 14" AND "HD 10"

1. The clutch camshafts may be dry. Lubricate the three clutch camshafts through the fitting located in center of each camshaft.
2. Throwout bearing or clutch sleeve may be dry. Lubricate throw-out bearing which also lubricates clutch sleeve and shaft.
3. Linkage may be worn or dirty. Install new parts if necessary. Use motor oil to lubricate linkage.

E. CLUTCH DISENGAGES WHILE IN OPERATION

1. The pressure plate may be worn in the cam seats. Install a new pressure plate.
2. The cam assemblies may be worn. Inspect cam and pressure plate, refer to Topics 100 and 101 "Master Clutch Removal."

63 -- Steering Clutch Irregularities and Corrections

A. STEERING CLUTCH SLIPPING

1. Improper adjustment. Refer to Topics 55 and 56 "Steering Clutch Adjustment."
2. Worn out. Refer to Topics 105, 106 and 107 "Steering Clutch Removal."
3. Loss of spring tension. Refer to Topics 105, 106 and 107 "Steering Clutch Removal."
4. Grease in clutch. Wash clutches as follows:
   a. First, lubricate the throwout bearings until they are filled. Install plugs in the drain holes in the steering clutch compartment and pour in three (3) gallons of non-inflamable fluid for the "HD 7"; five (5) gallons for the "HD 10" and "HD 14."
   b. Start the engine and run tractor back and forth for several minutes without releasing steering clutches. Stop tractor and drain each compartment.
   c. Replace plugs and fill each compartment as outlined above. Operate the tractor without load for five minutes, releasing both steering clutches as often as possible. Drain the compartments.
   d. The steering clutch throwout bearings and mechanisms must be lubricated after the steering clutches are washed, as all lubricant will also be washed out.
   e. Since it is possible that some cleaning fluid may drain from the steering clutch compartments into the final drive gear cases during the process of washing, the final drive gear cases should be drained, flushed and refilled with new oil after the steering clutches are washed.

B. CLUTCH WILL NOT DISENGAGE

1. Improper adjustment. Refer to Topics 55 and 56 "Steering Clutch Adjustment."
2. Throwout bearing failure. Install new bearings on throwout fork.
3. Lower end of throwout fork out of equalizer socket in bottom of steering clutch compartment. Replace fork in the equalizer.

64 -- Brake Irregularities and Corrections

A. BRAKE NOT HOLDING PROPERLY

1. Adjust brakes. Refer to Topics 57, 58 and 59.
2. Grease on lining. Wash out as outlined under steering clutch washing instructions.
3. Lining worn or torn off. Install new brake band assembly or reline band.
4. Pin out of brake band. Replace pin.

65 -- Track Irregularities and Corrections

A. TRACKS TOO LOOSE

1. Improper adjustment. Adjust so the track can be lifted 1½" to 2" off the track support roller.
2. Pins and bushings worn out. Remove track and install new pins and bushings.
3. Truck wheels worn out. Install new truck wheel or repair.
4. Front idler worn out. Install new idler, or repair.
5. Front idler out of alignment. Refer to Topic 61.
6. Stabilizer cranks and linkage worn. Refer to Topic 112, 113 and 114 "Stabilizer Crank Removal."
7. Sprung track frame. Rebuild as required.
8. Sprocket worn. Install new sprocket.

66 -- Adjustment on Hour Meter

The "fast" and "slow" adjusting screw on the back of the hour meter should never be turned more than ½ turn in either direction.

When the hour meter does not run at all it is advisable to inspect the ground. The later meters are grounded with a wire that fastens to the engine temperature gauge. The older meters are grounded through the meter case to the cowl without use of a wire.

If the meter is properly grounded and still does not run, connect the meter directly to the battery by shorting out the pressure switch. If the hour meter runs on this direct circuit, reconnect the hour meter through the pressure switch and adjust switch as follows:

1. Turn the idle adjusting screw on the governor tower back 1½ turns. Shut off motor.
2. Remove instrument panel being careful not to short the ammeter post on dash.
3. Remove seal, nut and cover on pressure switch.
4. Use a test light with two sharp probes on the end of the wires. (See sketch.) Insert one probe through wire from pressure switch to hour meter. Insert the other probe through black ground wire running from hour meter to temperature gauge on the 044902 meters, or ground probe to the meter case on the older meters. (Note: A test light is the most positive way to adjust switch; however, if the material for making one is not available the switch can be adjusted by observing the clock.)
5. Start the engine and run at low idle. Adjust contacts in pressure switch so that test light just lights at this engine speed, or if test light is not used, so that hour meter just starts. Stop engine to make sure contacts break and test light goes off or hour meter stops. If no test light is

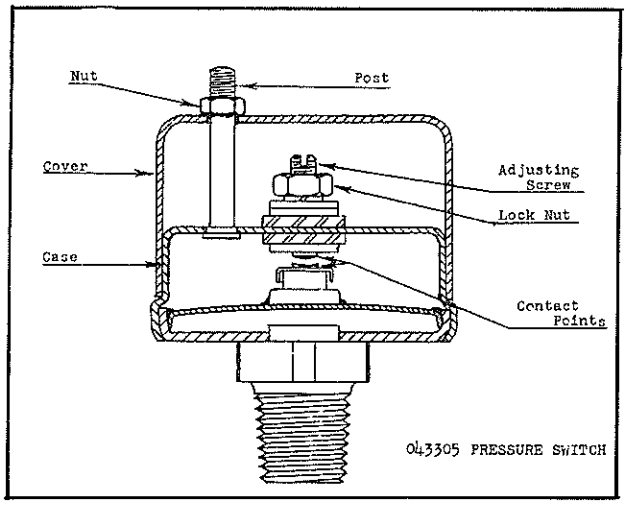

FIG. 1

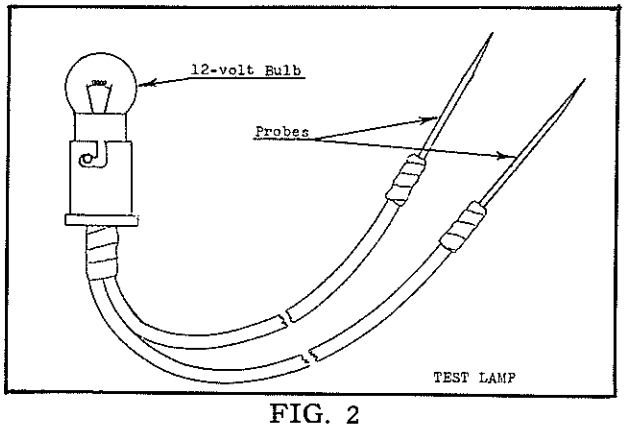

FIG. 2

used wait at least three minutes for meter to stop to allow for overrun.

6. Install cover leaving nut off of post. If the nut is installed it may distort the switch and for that reason its use has been discontinued.
7. Remove test light and install instrument panel on dash.
8. Reset engine idle adjusting screw back to original position. There is a possibility that some engines idle too slow. The idle speed should be 450 RPM.

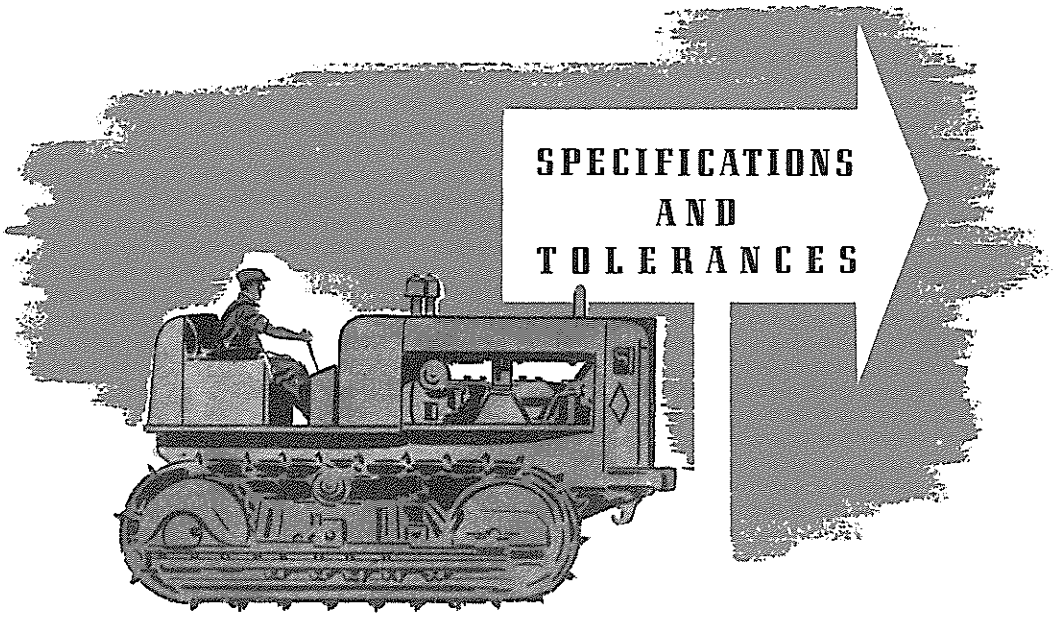

SAFETY:

When working with another man be sure you both understand the plans. Remember, congenial team work promotes safety.

67 -- Specifications and Tolerances

ENGINE	DATA HD-7	DATA HD-10	DATA HD-14	Install New Parts When Clearance Exceeds
Weight of motor, completely equipped	1585	1865	2093	
Engine—Make	General Motors Diesel-Model "71"			
Type	2-Cycle in Line			
No. of Cylinders	3	4	6	
Bore	4¼	4¼	4¼	
Stroke	5"	5"	5"	
Total Displacement Cu. In.	213	284	425	
Direction of Rotation from front	Clockwise	Clockwise	Clockwise	
Speed Range—R.P.M. (Governed)	450 to 1500	450 to 1600	450 to 1500	
H.P. at Drawbar } Note: Std. Conditions	60.10	86.63	132.19	
H.P. at Belt } Note: Std. Conditions	71.08	101.62	150.48	
Maximum Torque R.P.M.	800 to 1200 R.P.M.			
N.A.C.C. Rating	21.70	28.90	43.40	
Compression Ratio	16 to 1	16 to 1	16 to 1	
Compression Pressure (approx.) lbs. per sq. inch at 1000 R.P.M.	500	500	500	
Compression Pressure (approx.) at Governed Speed, lbs. per sq. inch	600	600	600	
Firing Order	1-3-2	1-3-4-2	1-5-3-6-2-4	
Injector Pump	Unit injector combined with plunger and spray nozzle for each cylinder.			
Governed R.P.M. (Full Load)	1500	1600	1500	
High Idle R.P.M.	1650	1750	1650	
Low Idle R.P.M.	450	450	450	
Lubrication	Force Feed			
A. CYLINDER LINERS				
1. Diameter inside	4.2492" to 4.2507"			
2. Dia. Piston Skirt	4.2432" to 4.2437"			
3. Clearance—Piston with Liner	.006" to .007"			.010"
4. Allowable Taper	.001"	.001"	.001"	
5. Allowable out of round	.001"	.001"	.001"	
6. Clearance, liner with block 1st type	Press Fit	Press Fit	Press Fit	
7. Clearance liner with block 2nd type	Slip Fit	Slip Fit	Slip Fit	
B. PISTONS				
1. Material	Pearlitic Malleable Iron Tin Plated or Parco Lubrited			
2. Piston Length	6.00"	6.00"	6.00"	
3. Piston Pin Length	3.725"	3.725"	3.725"	
4. Dia.—Skirt	4.2432" to 4.2437"			
5. Dia.—Inside Liner	4.2492" to 4.2507"			
6. Clearance Piston with Liner	.006" to .007"			.010"
7. Dia., Inside—Pin Bush.	1.503" to 1.5025"			
8. Dia., Outside—Pin	1.500" to 1.4998"			
9. Clearance—Pin in Bushing	.0025" to .0032"			.010"
C. PISTON RINGS—COMPRESSION				
1. No. and width	4—⅛"	4—⅛"	4—⅛"	
2. Gap between ends fitted	.020" to .025"			.060"
3. Clearance in Groove Upper Ring	.010" to .012"			.030"
4. Clearance in Groove 2nd from top	.008" to .010"			.020"
5. Clearance in Groove 3rd & 4th from top	.006" to .008"			.015"
D. PISTON RINGS—OIL CONTROL				
1. No. and Width	Two 3/16" Three-Piece Ring			
2. Gap between ends fitted	.010" to .020"			.040"
3. Clearance in Groove	.004" to .008"			.012"

ENGINE	DATA			Install New Parts When Clearance Exceeds
	HD-7	HD-10	HD-14	
E. CRANKSHAFT				
1. Material	High Carbon, Manganese Steel, Tocco Hardened Journals			
2. Dia.—Crank Pin Journals	2.750″ +.000-.001			
3. Width between cheeks	2.125″ +.001-.001			
4. Dia.—Main bearing Journals	3.500″ +.000-.001			
5. Length Shaft Journal Thrust	1.500″ +.001-.001			
6. Crankshaft Journals may be ground under-size	.010″, .020″, .030″			
7. Under-size bearings available	.010″, .020″, .030″			
8. End Play	.0025″ to .0075″			. 012″
F. MAIN BEARINGS				
1. Material	Copper-Lead, Steel Backed, Precision Type			
2. No. per Engine	4	5	7	
3. Dia.—Inside Shell	3.502″ +.001-.000			
4. Dia.—Journal	3.500″ +.000-.001			
5. Clearance—Shell on Journal	.002″ to .004″			.008″
6. Length—Shell only	1.125″	1.125″	1.125″	
7. Length—Over thrust Bearing	1.4965″ +.000-.003			
8. Length—Shaft Journal Thrust	1.500″ +.001-.001			
9. Clearance—Thrust—Rear main Bearing	.0025″ to .0075″			.012″
10. Bearing Projected Area—Total, Square Inches	15.75	19.68	27.56	
11. Material—Thrust Flange	Babbitt flange on rear main bearing			
12. Under-size bearings available	-.010″, -.020″ & -.030″			
G. CONNECTING ROD BEARINGS				
1. Material	Copper-Lead, Steel Backed Precision Type			
2. Length	1.780″	1.780″	1.780″	
3. Diameter, Inside	2.752″ +.001-.000			
4. Projected Area—Total, Square Inches	14.68	19.58	29.37	
5. Undersize Bearings available	.010″, .020″ & .030″			
6. Clearance, Lower Shell with Journal	.002″ to .004″			.008″
H. CONNECTING RODS				
1. Material	Chrome—Molybdenum			
2. Length	10.125″	10.125″	10.125″	
3. Weight, Complete—Lbs.	6.8	6.8	6.8	
4. Dia.—Inside Lower Shell	2.752″ +.001-.000			
5. Clearance—Lower Shell with Journal	.002″ to .004″			.008″
6. Width—Lower End	2.117″ to 2.115″			
7. End Play—Lower End	.006″ to .012″			
8. Dia.—Piston Pin	1.500″ to 1.4998″			
9. Dia, Inside—Bushing—Upper End	1.503″ to 1.5025″			
10. Clearance—Pin with Bushing	.0025″ to .0032″			.010″
I. GEAR TRAIN				
1. Backlash, Crankshaft—to Idler—to Camshaft—to Blower Drive Gear—the various mating Gears.	.004″ to .006″			.010″
2. Type of Gears	Helical			
3. Location	Rear end of Motor			
4. Width of Gears	1½″	1½″	1½″	
5. Crankshaft Gear Rotation	Counter Clockwise—viewed from rear			

ENGINE	DATA			Install New Parts When Clearance Exceeds
	HD-7	HD-10	HD-14	
J. IDLER GEAR				
1. Dia., Inside—Gear Bushing	2.7485″ +.0005,-.0000			
2. Dia., Outside—Hub	2.7465″ +.0000,-.0005			.006″
3. Clearance—Gear Bushings w/Hub	.002″ to .003″			
4. Length—Between Hub Shoulder and Thrust Washer	1.185 +.001, -.001 1.189″ +.001, -.001			
6. End Clearance between Gear & Hub	.003″ to .006″			.008″
7. Rotation	Clockwise—Viewed from rear			
8. No. of teeth—1st Type	54	54	54	
9. No. of teeth—2nd Type	68	68	68	
10. Driven from	Crankshaft Gear			
11. Type of Gear	Left Hand Helical			
K. EXHAUST VALVE				
1. Type	Poppet			
2. Valve Arrangement	Two overhead per Cylinder			
3. Valve Material	Silchrome			
4. Valve Lift	.375″	.375″	.375″	
5. Angle of Valve Seat	45°	45°	45°	
6. Valve Face Width	$\frac{3}{16}$″			
7. Valve Lash	.012″ at Running Temperature			
8. Dia.—Head of Valve	$1\frac{9}{16}$″	$1\frac{9}{16}$″	$1\frac{9}{16}$″	
9. Dia.—Stem of Valve	.3425″ +.0000, -.0010			
10. Dia.—Inside Guide	.3445″ +.0010, -.0000			
11. Stem with Guide Clearance	.001″ to .003″			.005″
12. No. of Valves Ea. Motor	6	8	12	
L. VALVE INSERT				
1. Type	Replaceable, Press Fit			
2. Seat Angle	45°			
3. Seat Width	.078″ or 5/64″			
4. Material	Heat-Treated, Chrome Molybdenum Casting			
M. VALVE GUIDE				
1. Type	Replaceable			
2. Diameter, External	.566″			
3. Diameter, Internal	.3435″ +.001, -.000			
4. Location—Depth from Bottom of Head to Guide	1⅞″			
5. Clearance between Valve Stem & Guide	.001″ to .003″			.005″
N. ROCKER ARMS				
1. Dia., Outside—Rocker Shaft	.8740″ +.0000, -.005			
2. Dia., Inside—Rocker Arm Bushing	.8750″ +.0010, -.0000			
3. Clearance, Shaft with Rocker Arm	.001″ to .0025″			.005″
4. No. of Injector Rocker Arms	3	4	6	
5. No. of Exhaust Valve Rocker Arms	6	8	12	
6. Bushing, Material & Type	Replaceable Bronze			
7. End Clearance Rocker Arm Assy.	.004″ to .006″			
O. CAM FOLLOWERS				
1. Dia.—Outside Follower	1.060″ +.001, -.000			
2. Dia.—Follower Bore in Cyl. Head	1.062″ +.001, -.000			
3. Clearance Follower w/Cyl. Head	.001″ to .003″			.005″
4. Looseness—Radial Follower w/Pin	.0005″ to .0016″			.005″

ENGINE	DATA			Install New Parts When Clearance Exceeds
	HD-7	HD-10	HD-14	
P. BALANCE SHAFT				
1. Material	One piece drop forging—case hardened at journals			
2. Driven from	Idler Gear			
3. Bearing Dia—Inside of Plain & Thrust Bearings	1.500″ +.001, -.000			
4. Dia.—Outside Shaft	1.4980″ +.0005, -.0000			
5. Clearance—Bearings with Shaft	.0015″ to .003″			
6. Length—Thrust Journal between Shoulder of Shaft & Gear	2.875″ +.001, -.001			
7. Length—Thrust Bearing	2.865″ +.001, -.001			
8. Clearance, End—between thrust shoulder & bearing	.008″ to .012″			.016″
9. Type of gear	Right Hand Helical			
10. Rotation (Drive End)	Counter Clockwise			
11. Gear, No. of teeth—1st Type	62	62	62	
12. Gear, No. of teeth—2nd Type	78	78	78	
13. Ratio of drive to crankshaft	1 to 1	1 to 1	1 to 1	
Q. CAMSHAFT				
1. Material	One piece drop forging—case hardened at journals and cams			
2. Driven from	Balance-Shaft Gear			
3. Bearing Dia., Inside—end bearings plain and thrust	1.500″ +.001, -.000			
4. Bearing Dia. inside, intermediate bearings	1.501″ +.001, -.000			
5. Dia., Outside—Shaft Journals	1.4980″ +.005, -.0000			
6. Clearance, end bearings with shaft	.0015″ to .003″			.005″
7. Clearance, intermediate bearings with shaft	.0025″ to .004″			.006″
8. End clearance, between thrust shoulder and bearing	.008″ to .012″			.016″
9. Length, thrust bearing	2.865 +.001, -.001			
10. Length, thrust journal, between shoulder of shaft and gear	2.875 +.001, -.001			
11. Type of gear	Left hand Helical			
12. Rotation (Drive End)	Clockwise			
13. Gear, No. of teeth—1st Type	62	62	62	
14. Gear, No. of teeth—2nd Type	78	78	78	
15. Ratio of drive to crankshaft	1 to 1	1 to 1	1 to 1	
R. BLOWER				
1. Blower, Type	Roots type, three lobed, helical rotors			
2. Blower R.P.M.	1.95 times engine speed			
3. Blower drive gear driven from	Camshaft gear			
4. Clearance—rotors to rear end plate	.007″ to .009″			
5. Clearance—rotors to front end plate	.014″ to .016″			
6. Clearance—leading side upper rotor with trailing side of lower rotor	.012.″-018″	.014″-.020″	.016″-.022″	
7. Clearance—trailing side of upper rotor with leading side of lower rotor	.002″ to .006″			
8. Upper rotor and gear helix angle	Right hand			
9. Lower rotor and gear helix angle	Left hand			
10. Length of housing—approx.	7½″	9 31/32″	15″	
11. No. of teeth, blower gears	27	27	27	
12. Backlash in gears—1st type	.001″ to .0015″			.002″
13. Backlash in gears—2nd type	.001″ to .0015″			.004″
14. Rotation, upper rotor (Drive end)	Counter clockwise			
15. Type—driven end bearings	2 single-row ball bearings			
16. Type—drive end bearings	2 double-row ball bearings			
17. Oil seals no. & type	4 spring-loaded rawhide			

ENGINE	DATA			Install New Parts When Clearance Exceeds
	HD-7	HD-10	HD-14	
S. BLOWER DRIVE GEAR				
1. Dia., inside, support bushings	1.6260″ +.0005, -.0000			
2. Dia., outside, hub	1.6250″ +.0000, -.0005			
3. Clearance annular—bushings with hub	.001″ to .002″			.005″
4. Length—support over bushings	2.997″ +.000, -.001			
5. Length, hub between shoulders	3.000″ +.002, -.000			
6. Clearance, end-bushings w/Hub	.003″ to .006″			.010″
7. Rotation of gear, drive end	Counter clockwise			
8. Type of gear	Left hand Helical			
9. No. of teeth—1st type	32	32	32	
10. No. of teeth—2nd type	40	40	40	
T. LUBRICATING OIL PUMP				
1. Lubricating oil pump	Spiral gear type			
2. Lubricating oil—crankcase capacity	11 qts.	13 qts.	14 qts.	
3. Backlash—Drive Chain	¼″ to ¾″			
4. Dia.,—outside gear	1.683″ +.000, -.002			
6. Width—gear	1.7480″ +.0000, -.0005			
7. Width—body	1.7500″ +.002, -.000			
8. Backlash in gears	.018″ to .020″			
9. Radial clearance—Gears with pump body	.002″ to .0045″			.0045″
10. End play, gears with pump body	.002″ to .0045″			.0045″
11. Rotation (Drive end)	Clockwise	Clockwise	Clockwise	
12. Ration of drive to crankshaft	.791 to 1	1.39 to 1	1.668 to 1	
13. No. teeth on crankshaft (drive sprocket)	19	25	25	
14. No. teeth on oil pump (driven sprocket)	24	18	15	
15. Driven by	Chain and sprockets from crankshaft			
16. Force feed to	Main and connecting rod bearings, piston pins, rocker arms, camshaft, balance shaft, blower drive gear and idler gear bearings and dome of piston for cooling.			
17. Gravity feed to	Cam follower assemblies, blower gears and bearings, upper part of injectors and exhaust valve stems.			
18. Splash to	Cylinder walls, governor, gear train, and oil pump chain.			
U. LUBRICATING OIL COOLER				
1. Description	Oil-to-water type, built into engine oil and water system,			
2. Location	Lower right front of cylinder block.			
V. LUBRICATING OIL FILTER "PRIMARY"				
1. Description	Full flow 2 piece removable metal element			
2. Location	Lower right front of cylinder block			
3. Size openings in filtering elements	.005″	.005″	.005″	
4. Service	At each oil change—30 to 60 hrs.			

ENGINE	DATA			Install New Parts When Clearance Exceeds
	HD-7	HD-10	HD-14	
W. LUBRICATING OIL FILTER "SECONDARY"				
1. Description	By-pass filter, replacement element type			
2. Location	Left side of motor			
3. Service	Replace element every 4th oil change or after each 240 hrs. of operation			
X. OIL PRESSURE				
1. At low idle speed	Not less than 5 lbs.			
2. At high idle speed	25 to 35 lbs.			
3. Pressure adjustments	None			
Y. INTAKE AND EXHAUST TIMING				
1. Exhaust valves close	52° A. B. D. C.			
2. Exhaust valves open	84° B. B. D. C.			
3. Cylinder inlet ports open	48° B. B. D. C.			
4. Cylinder inlet ports close	48° A. B. D. C.			
5. No. of ports in each cylinder	64 (Two rows—32 in ea. row)			
6. Diameter of ports	$\frac{5}{16}$"			
7. Angle of ports	16° from the radial in the transverse plane			
Z. STARTER				
1. Rotation "Drive End"	Clockwise	Clockwise	Clockwise	
2. Ratio of drive to crankshaft	9.27 to 1	9.27 to 1	10.7 to 1	
3. No. of teeth (drive)	11	11	11	
4. No. of teeth (driven)	102	102	118	
AA. GENERATOR				
1. Rotation (drive end)	Clockwise	Clockwise	Clockwise	
2. Ratio of drive to crankshaft	1.7 to 1	1.7 to 1	1.7 to 1	
3. Pitch dia (drive sheave)		7.803"		
4. Pitch dia. (driven sheave)	4.59"	4.59"	4.59"	
BB. WATER PUMP				
1. Rotation (drive end)	Clockwise	Clockwise	Clockwise	
2. Ratio of drive to crankshaft	1.95 to 1	1.95 to 1	1.95 to 1	
CC. INJECTORS				
1. Make	General Motors			
2. Type	Unit injector			
3. Timing by & gauge height	Timing Pin—1.484"			
4. Spray tip hole size	.006"	.006"	.006"	.008"
5. No. of holes in each tip	6	6	6	
6. Angle of spray tip holes—below horizontal	30°	30°	30°	
7. No. of filters in each injector	2	2	2	
8. Type of filters	Replaceable, Cone-shaped, Porous Bronze			
9. Start of injection	Variable, at various loads			
10. Injection starts at full load	14° B. T. D. C.			
11. Injection ends	2° B. T. D. C.			
DD. FUEL TRANSFER PUMP				
1. Type	Rotating Vane			
2. Cap in gals, per hr. at 1500 engine R.P.M. at 50 lbs. per sq. in. pressure	30	30	30	
3. Rotation (Drive end)	Counter clockwise			
4. Ratio of drive to crankshaft	1.95	1.95	1.95	

ENGINE	DATA			Install New Parts When Clearance Exceeds
	HD-7	HD-10	HD-14	
EE. GOVERNOR				
1. Type	Mechanical flyball			
2. Make	Handy			
3. Type of thrust bearing	3 piece ball bearing			
4. Means of speed regulation	By hand throttle			
FF. ELECTRICAL SYSTEM				
1. Generator	12 volt, 195 Watts			
2. Starting motor	12 volt, Dyer drive engagement			
3. Batteries, No. & type	Two 6-volt in Series	Two 6-volt in Series	Two 12-volt in Parallel	
GG. AIR CLEANER				
1. Make	United			
2. Type	Oil bath			
3. Total oil capacity ea. oil cup	Fill cup so the center of baffle extends up out of the oil only $\frac{3}{16}''$			
4. No. of air cleaners ea. tractor	1	2	2	
HH. PRE-CLEANER				
1. Make	United			
2. Type	Dry Centrifugal			
3. No. of Pre-Cleaners	1	2	2	
II. COOLING SYSTEM				
1. Radiator type	Tubular core			
2. Water pump type	Centrifugal			
3. Pump driven from	Blower, Front end, Lower Rotor Shaft			
4. No. of drain cocks	Two: One at pump, one at bottom of oil cooler connection			
5. Capacity each system, Gal.	5¾	9¾	12	
6. Cooling fan	Belt driven from crankshaft			

JJ-GEAR TRAIN

Name of Gear	Number of Teeth		Helical Angle	
	1st Type	2nd Type	1st Type	2nd Type
Crankshaft Gear	62	78	41°	19°
Idler Gear	54	68	41°	19°
Balance Shaft Gear	62	78	41°	19°
Camshaft Gear	62	78	41°	19°
Blower Drive Gear	32	40	41°	19°

68 -- Torque - - Wrench Specifications

When a torque wrench is available, the following values may be used.

APPLICATION	torque — lb. ft.
A. Injector clamp nuts	20-25
B. Cylinder head stud nuts	165-175 Cold
C. Connecting rod cap nuts	65-75
D. Main bearing cap nuts	155-185
E. Flywheel housing cylinder block bolts, ½" size	90-100
F. Camshaft and balance shaft end nuts	300-325
G. Blower rotor gear retainer bolts	
½" dia.—2nd type	40-45
⅜" dia.—1st type	25-30

69 -- TIMING DIAGRAM "ENGINE"

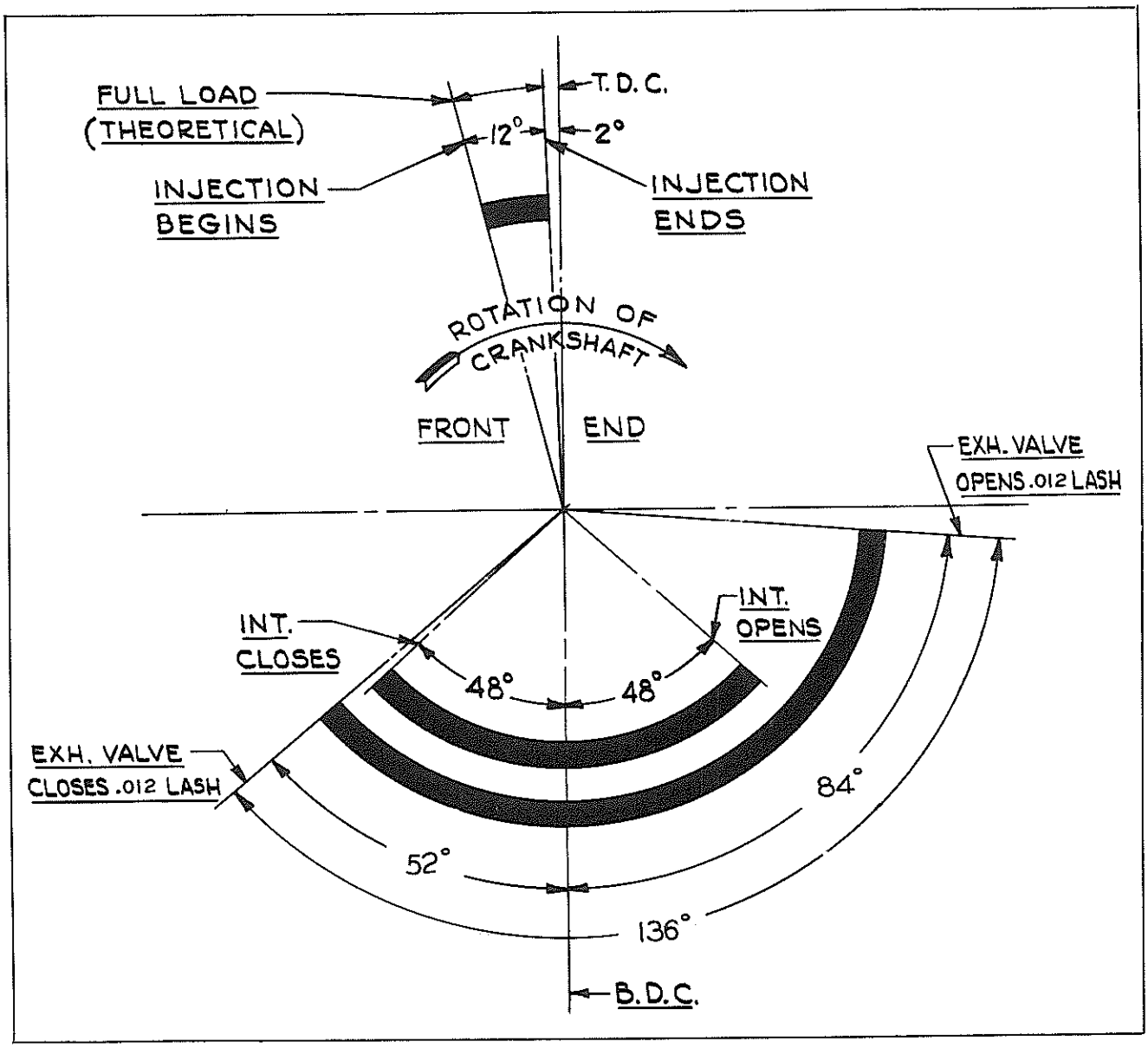

70 -- WIRING DIAGRAM "HD 7"

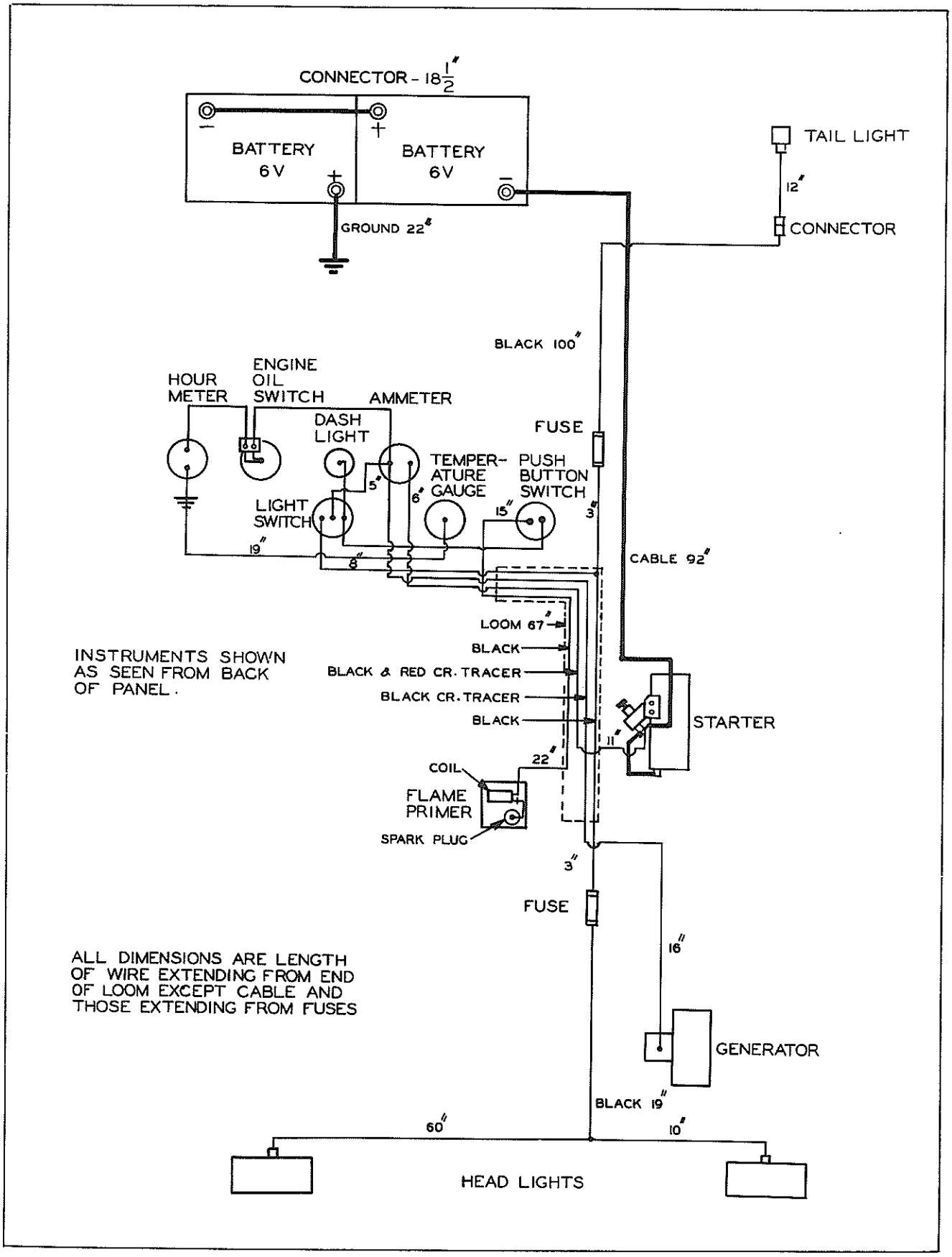

71 -- WIRING DIAGRAM "HD 10"

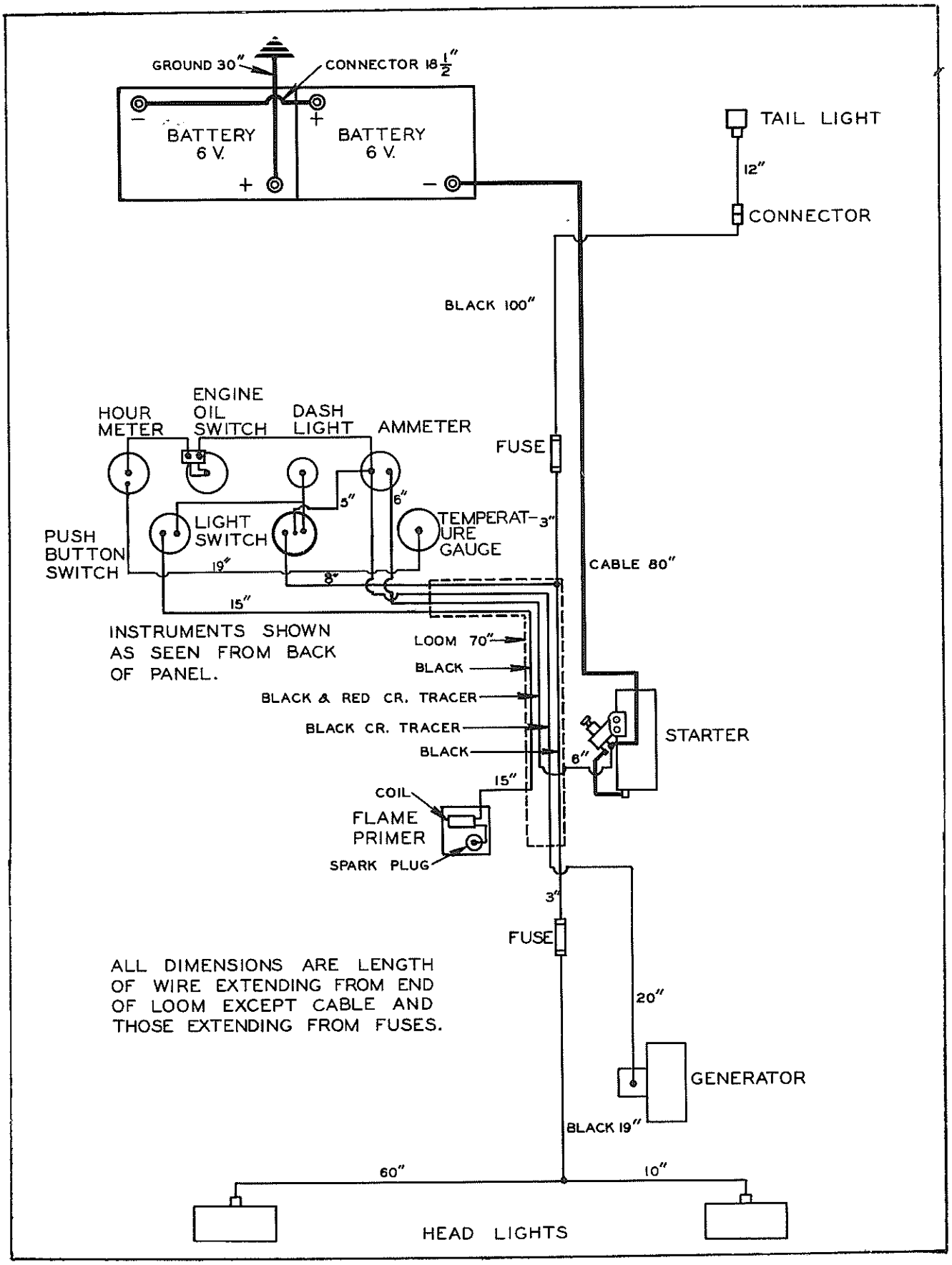

72 -- WIRING DIAGRAM "HD 14"

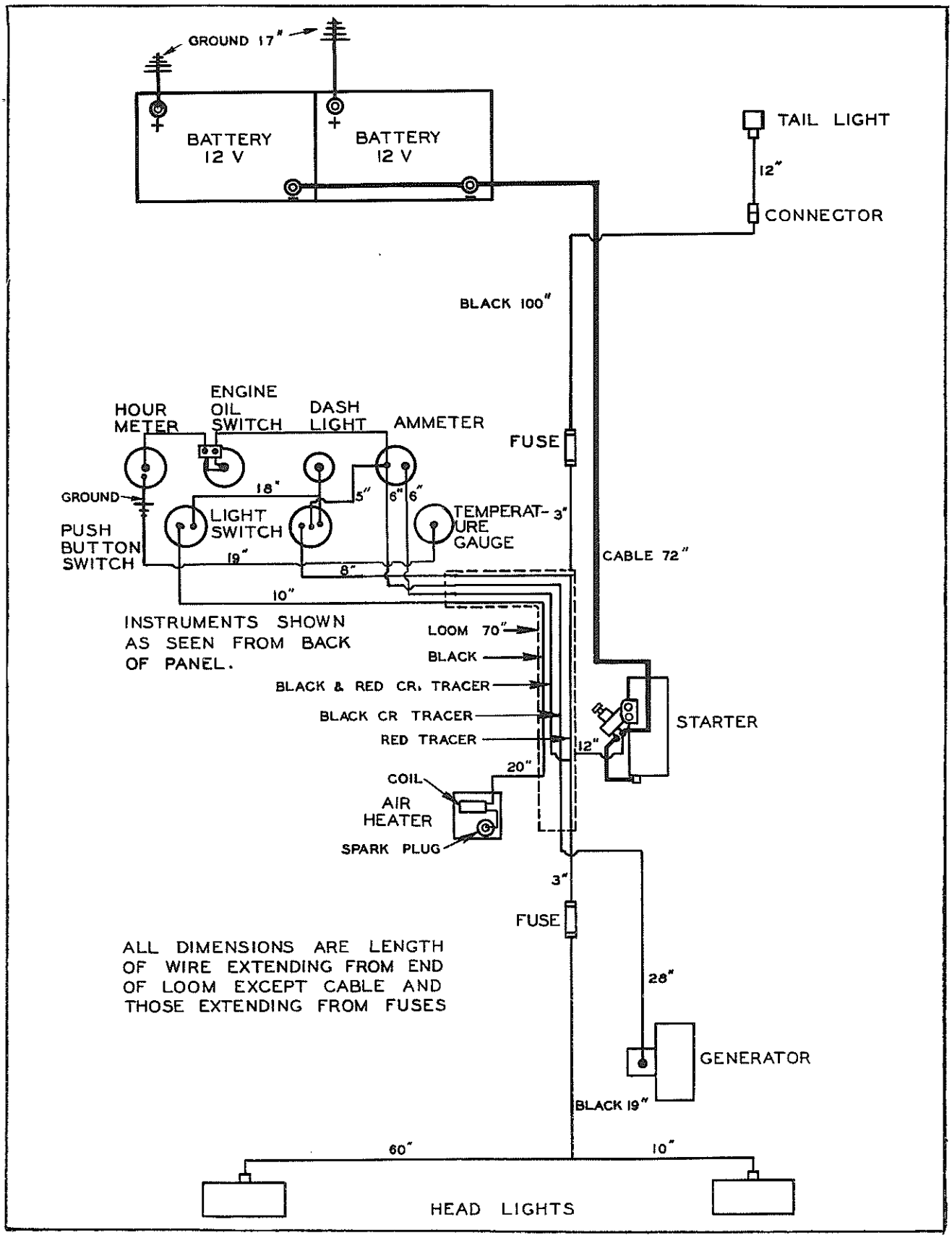

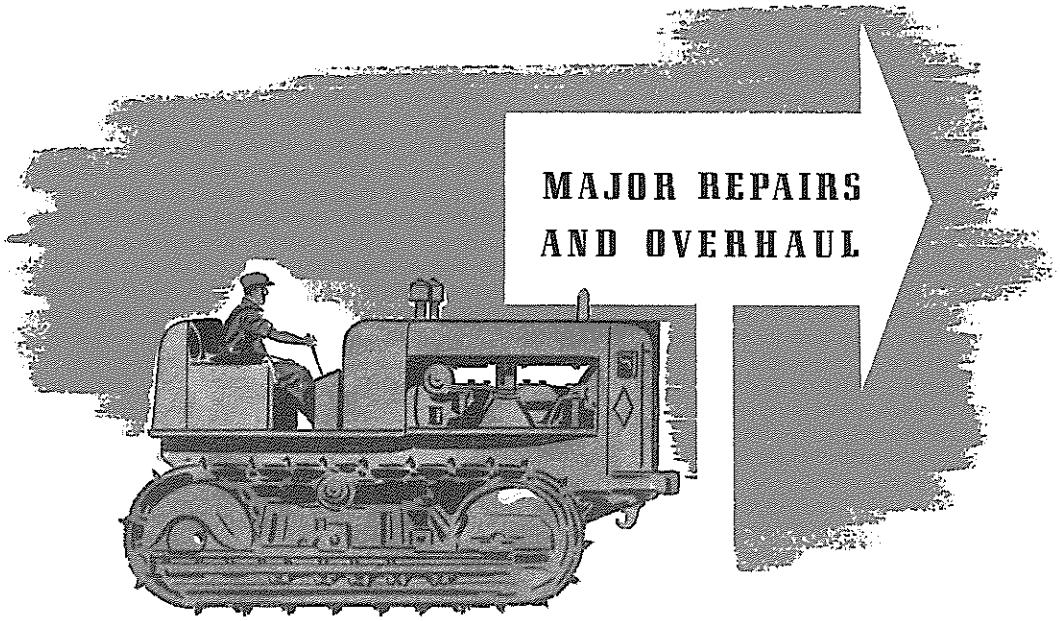

SAFETY:

Particular care must be exercised when using hoisting equipment, cribbing under heavy loads, or working around cable under extreme tension.

MAJOR REPAIRS AND OVERHAUL

73 -- Motor Disassembly and Assembly

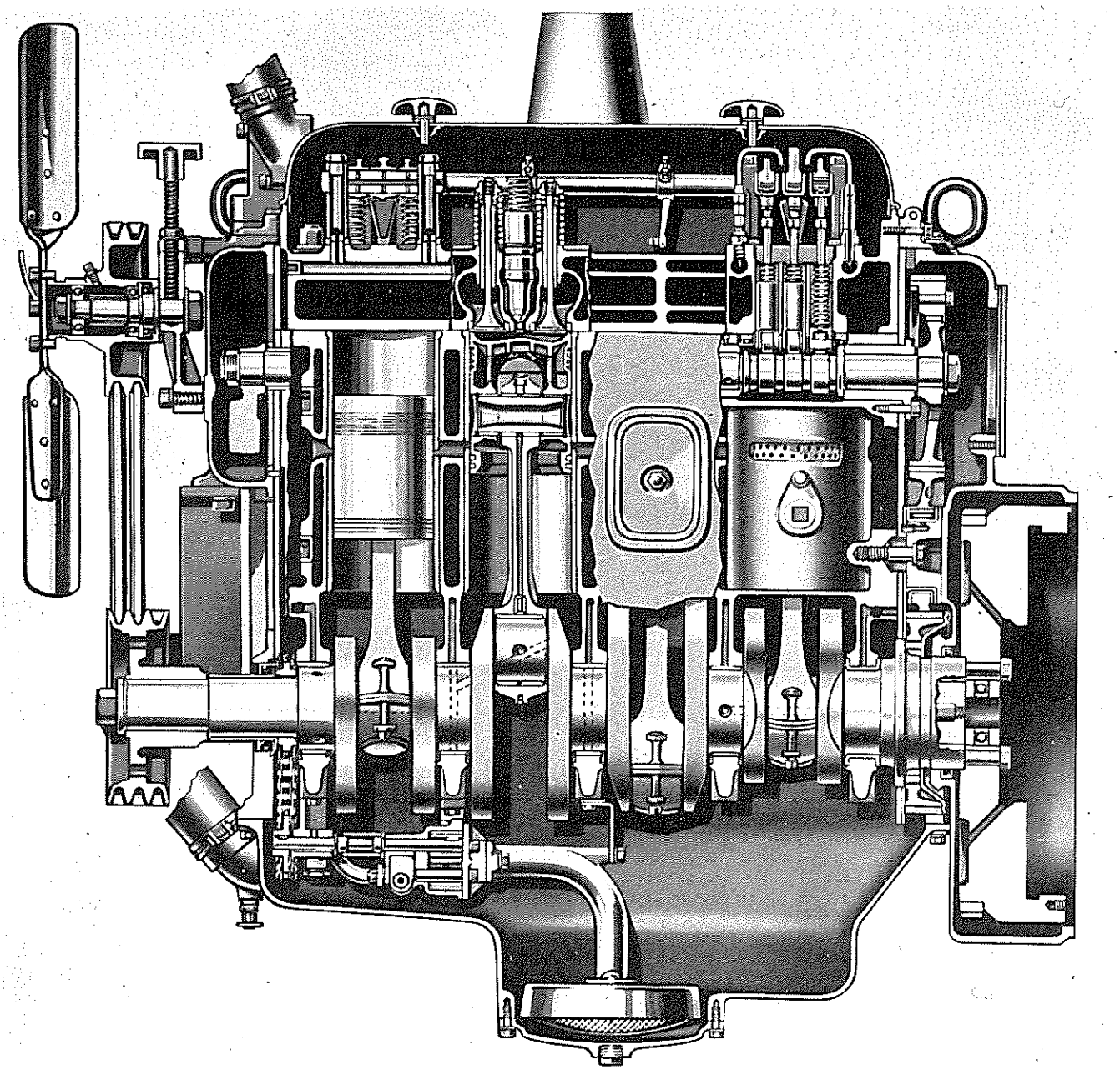

FIG. 1

When a complete overhaul is required, it is advisable to disassemble the motor completely and clean the motor block thoroughly. There is no prescribed method for disassembling or assembling this motor, but as follows is an outline that will be helpful. There is no detailed description here as to how the different parts are removed from the engine because this is covered in minute detail under headings that deal with each part. If in doubt as to how to remove and disassemble a fuel pump, lubricating pump, etc. refer to these assemblies under their separate headings.

A. DISASSEMBLE MOTOR

1. Drain the oil.
2. Suspend the motor with a hoist until the oil pan just rests on the floor.
3. Remove the capscrews that hold the oil pan to the motor block.
4. Hoist the motor up and remove the oil pan or pans, the HD-14 has two oil pans. Part of the oil pump has to be dismantled before the upper oil pan can be removed.
5. Remove the oil pump, oil screen and

by-pass assembly.

6. Remove the fan drive pulley and crankcase front cover assembly.
7. Remove the oil seal spacer and oil pump drive sprocket.
8. Block up under the cylinder block so the crankshaft can be rotated without hitting the blocks. Disconnect the chain hoist.
9. Remove the clutch assembly from the flywheel.
10. Remove the flywheel.
11. Remove the combination gear train and flywheel housing.
12. Remove the water by-pass.
13. Remove the fan assembly.
14. Remove the balance weight cover.
15. Remove the cylinder head.
16. Remove the blower and attached parts such as fuel pump, water pump, etc.
17. Remove the oil filter and cooler adapter.
18. Remove the blower drive gear assembly.
19. Remove the camshaft and balance shaft.
20. Remove the idler gear and the spacer and dowel assembly.
21. Remove the pistons and connecting rods.
22. Remove the main bearing caps and lift the crankshaft out.
23. Remove the 2 end plates.
24. Pull the cylinder liners.

B. INSPECTION OF MOTOR PARTS

Inspect all parts while the motor is dismantled and install new parts as required. Clean the block thoroughly, especially the airbox and oil passages.

C. REASSEMBLE MOTOR

1. Installing liners, be sure liners are washed clean, and no lubricant used when pressing them in block. Place liner in hole of block, care being taken that liner is centered in hole. Next set up puller and push liner in. Repeat this operation until all liners are installed.

   NOTE: On the engine block having the larger bore, liners can be installed by pushing them in with your hand.

2. Install the upper half of main bearings in cylinder block.

   NOTE: The upper half is marked "upper" and has a continuous groove from parting-line to parting-line. The lower half is marked "lower" and has no groove.

   The rear main bearing takes all of the thrust from crankshaft and must be installed in proper place next to flywheel.

   NOTE: When looking from the rear of the motor, the blower is ALWAYS on the RIGHT side of the block.

   The flywheel and timing gears go to the rear of the motor. Install the crankshaft in the block with the flywheel flange toward the rear. Place number one cap on number one bearing, etc., until all main bearing caps have been installed

   NOTE: All caps are numbered and all numbers must go to blower side of motor.

   Tighten all main bearing nuts, and rotate the crankshaft to see that it turns free, then install keys. Main bearings need no further adjusting as there are no shims. Never file a main bearing cap to make it fit. If bearings are loose, install new bearing shells.

3. Install piston to connecting rod.

   NOTE: Connecting rods have spray nozzle in upper end. Make sure these orifices are open.

   Install piston rings on piston. Install number one connecting rod and piston in number one liner. (Use piston ring compressor.) Repeat this operation until all connecting rods and pistons are installed, care being taken that the numbered connecting rods are placed in their respective cylinders. Install the upper half of bearing shell in upper half of connecting rod and lower half of bearing shell in lower half of connecting rod. These shells are marked "upper" and "lower." The upper half has two holes with a short groove at each parting line. The lower half has no holes, but a groove from parting-line to parting-line. The connecting rods are also numbered; all numbers go toward blower side of motor. Tighten connecting rod nuts and rotate crankshaft to see that it turns free, lock with cotter keys.

   NOTE: In tightening connecting rod nuts, do not use a wrench over eight inches (8") in length as bolts are small. There are no shims used with these bearings. Never file a cap to fit; if bearings are loose, install new bearing shells.

4. Install the clyinder block end plate, front and rear, using new end plate gasket.

   NOTE: Install all capscrews in end plates, but do not tighten them as end plates may have to be shifted when installing camshaft and balance shaft.

5. Install camshaft and camshaft intermediate bearing lock bolts.

   NOTE: Camshaft goes to blower side of motor, or right side.

   Next install the balance shaft and gear. Camshaft gear and balance shaft gear must be timed. This is done by getting the mark on camshaft gear to correspond with mark on balance shaft gear as shown. Install the balance and camshaft

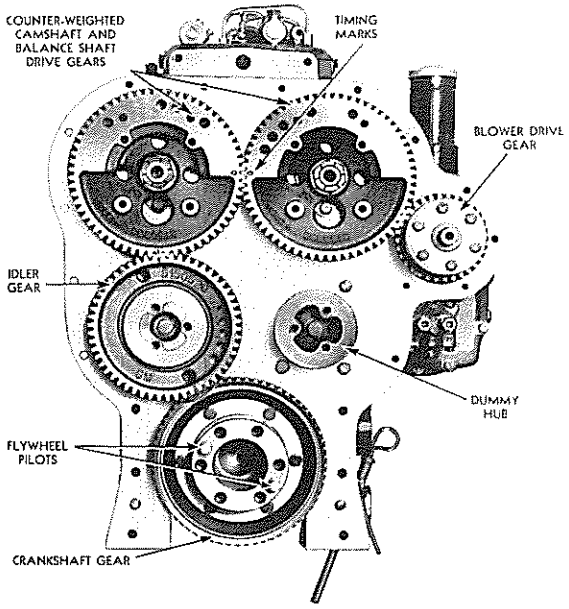

FIG. 2

front end bearings. Install the balance weights and tighten all capscrews which hold cylinder block end plates.

6. Install the crankshaft gear and oil slinger to crankshaft. Turn the crankshaft until mark on gear is pointing up. Next, install the idler gear so that the mark on the idler gear corresponds with mark on the balance shaft gear and the other mark on the idler gear corresponds with mark on the crankshaft gear as shown. Next install the idler gear hub and washer; inspect to see if all the above mentioned marks correspond. If they do, the motor is in time. Next install the blower drive gear.
   NOTE: There is no timing of this gear. Install the spacer and dowel assembly and tighten capscrews.
7. Install all parts which drive from the blower before installing blower on motor. These parts are as follows: blower drive, cover, fuel oil transfer pump, governor weight housing, and water pump. Always use new gaskets when reassembling a motor. To install these parts, determine the front and drive end of the blower. This is very easy as blower will only go on motor one way. The end facing the flywheel is the drive end of blower. The blower drive cover belongs at top and the fuel oil transfer pump at bottom of blower on the drive end. The governor weight housing attaches at top and water pump at bottom of blower, on front end.
8. Install blower on cylinder block, using new blower gasket and water pump outlet gasket.
9. Install blower drive coupling hub. Next, install blower drive shaft, then blower drive coupling retainer.
10. Install the oil cooler and primary filter. Be sure to use all new gaskets; also see that Neoprene water pump inlet seal between pump and cooler is in good condition.
11. Install oil pump drive sprocket, also oil pump, using new gaskets at all connections.
12. Install flywheel housing assembly using all new gaskets and a new oil seal.
13. Install flywheel.
14. Install balance weight cover using new gasket.
15. Install crankshaft front cover assembly, using new gasket and seal.
16. Install oil pan using new gasket.
17. Install hand hole cover plates, using new gaskets.
18. Install cylinder head, cylinder head gasket and oil gaskets. (Side and end pieces, cement on both sides).
19. Install governor control housing assembly on cylinder head.
20. Install governor control link.
21. Install water manifold assembly.
22. Install blower drive bearing oil pipe assembly.
23. Install breather pipe to governor.
24. Time injectors, equalize injectors and set valve lash. Refer to Topics 42, 43 and 44.

74 --"HD 7" Motor Removal and Installation

It will be necessary to have the following equipment, or its equivalent, on hand in order to remove the motor from the tractor.

1. A one ton hoist.
2. A ten foot length of ½" cable or ⅜" chain.
3. One motor stand or sufficient wooden blocks to support motor.
4. Ample supply of cleaning fluid available in clean container.
5. At least 6 clean containers for holding nuts, bolts, capscrews, etc.

A. REMOVAL OF ENGINE FROM TRACTOR

1. Disconnect battery by removing terminal connection from battery post.
2. Loosen clamp bolts and remove precleaners. Fig. 1.
   NOTE: On late production models the

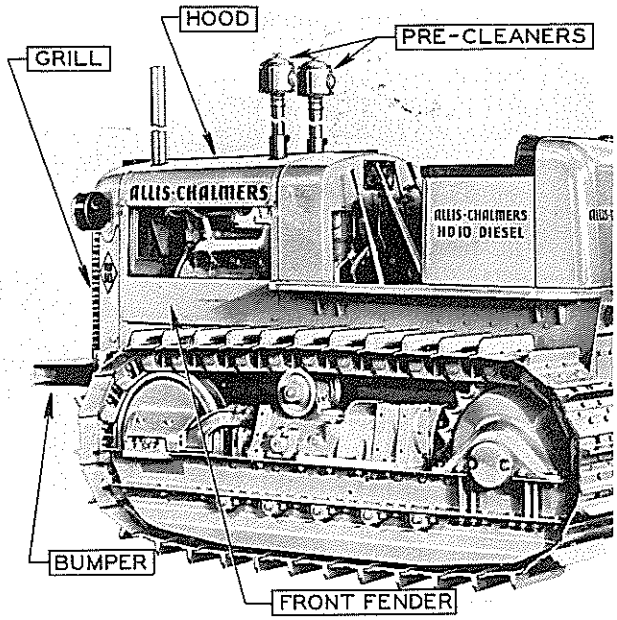

FIG. 1

pre-cleaners extend up through the cowl, and will not have to be removed.

3. Loosen bolts at each corner of hood and remove hood. Fig. 1.
4. Remove right and left front fenders. Fig. 1.
5. If tractor is equipped with bumper, remove radiator grill by taking out 4 T-head bolts on each side.
6. Remove pin from radiator shutter control rod.
7. Drain cooling system by opening the two drain cocks. Fig. 2.

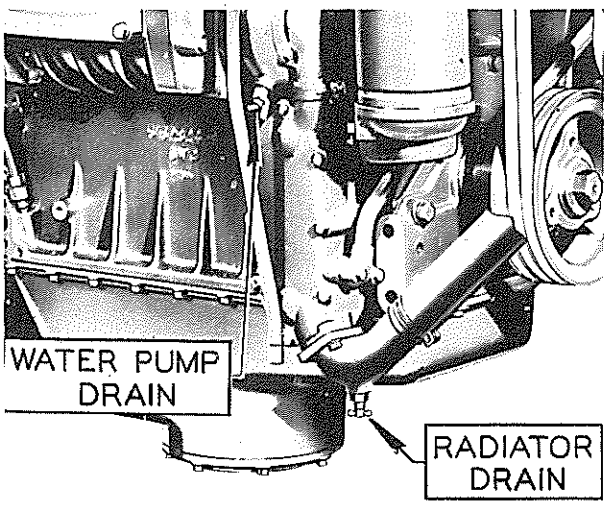

FIG. 2

8. Loosen upper and lower radiator hose connections.
9. Take out 3 capscrews from each side of radiator shell and 2 capscrews holding bumper. Shell and core can now be removed as a unit. If there is no bumper on the tractor, the grill, radiator shell and core can be removed in one unit.
10. Shut off fuel supply under tank by turning shut-off cock handle to a vertical position.

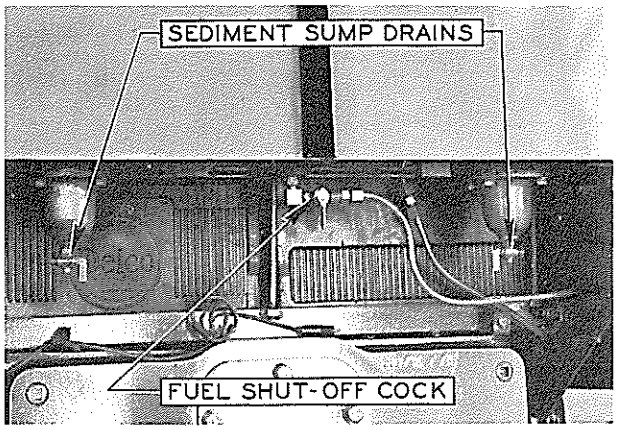

FIG. 3

11. Disconnect fuel pressure gauge line at top of fuel filter, care to be taken not to twist flexible hose. Fig. 4.
12. Disconnect motor oil pressure gauge line at union at rear right side of motor.

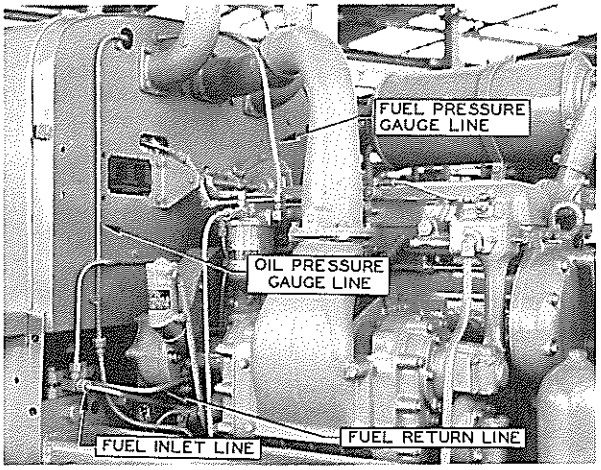

FIG. 4

13. Loosen and remove temperature gauge tube at rear end of water manifold.
14. Disconnect fuel oil inlet line from fuel pump. Fig. 4.
15. Disconnect fuel oil return line at rear of top fuel manifold. Also remove clamp bolts holding return line to rear of motor support assembly.
16. Disconnect fuel inlet and return lines at connections under clamp — Item 15. These lines may now be removed. Fig. 4. CAUTION: Do not bend these lines as they are steel tubing and may break.

17. Remove pins from governor and throttle rods on left side of throttle friction disc.
18. Loosen hose clamps on air tube and intake elbow.
19. Remove 2 capscrews holding lower water connection to oil cooler. Fig. 2.
20. Remove generator wire from outside of voltage regulator. Fig. 5.

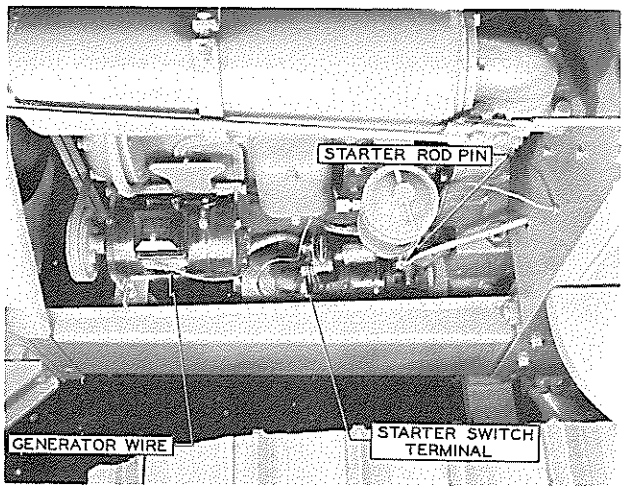

FIG. 5

21. Remove both wires from outside starter switch terminal. Fig. 5.
22. Disconnect headlight wire at fuse connection under generator, taking care that fuse is not lost.
23. Disconnect air heater line at check valve underneath air heater and remove clamp on line from gear case housing.
24. Remove 2 capscrews from air heater cover and move out far enough to disconnect wire from bottom of coil.
25. Remove cotter key and pull starter rod from pin. Fig. 5.
26. Engage master clutch.
27. Remove the two plates on spacer and work through the two openings. Fig. 6.

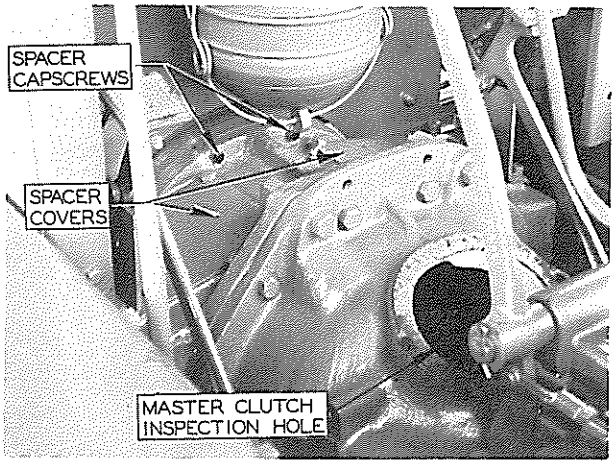

FIG. 6

28. Remove the four spacer-to-engine capscrews from inside the spacer.
29. Remove twelve capscrews holding the master clutch assembly to the flywheel.
30. Remove the 10 capscrews holding the motor to the spacer. 6 of these can be removed from the outside of housing while 4 must be removed by working through the inspection holes. (Item 28).

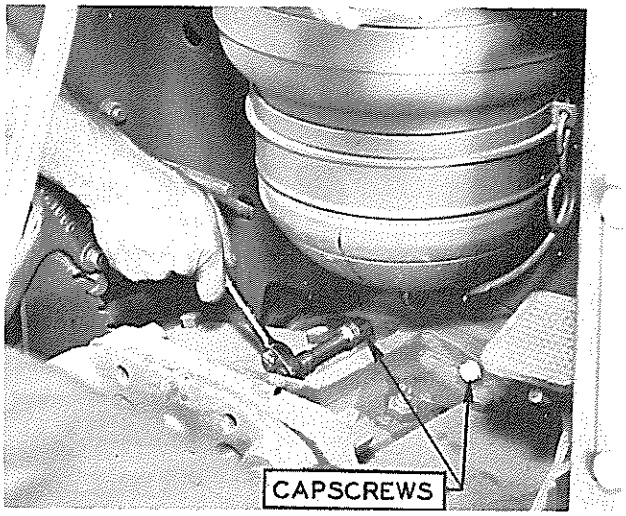

FIG. 7

31. Remove bolts from outer end of front motor support. Raise outer end of motor support with a bar and remove shims. Fig. 11.
    CAUTION: In rebuilding, these shims must be installed in their original positions in order not to alter the motor alignment.
32. The motor can now be removed by chain hoist connected to hoist brackets. Fig. 8. Support weight of motor on hoist.

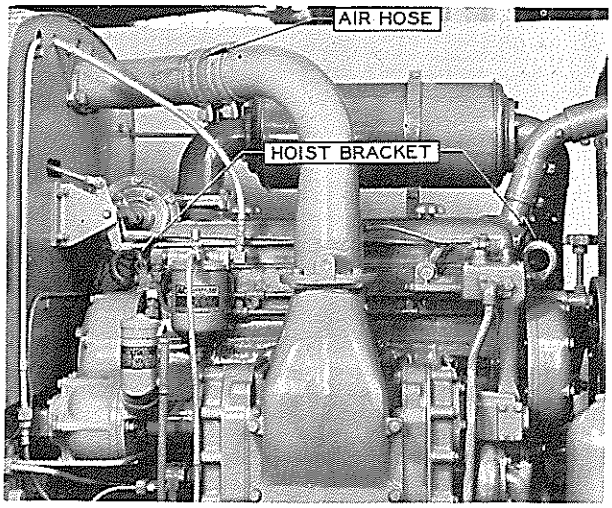

FIG. 8

then slide motor forward until motor clears clutch shaft. The motor can now be lifted clear of the engine support and mounted on stand or on wooden blocks.

B. INSTALLATION OF MOTOR

1. Do not attach master clutch assembly to flywheel. Install clutch assembly on clutch shaft.

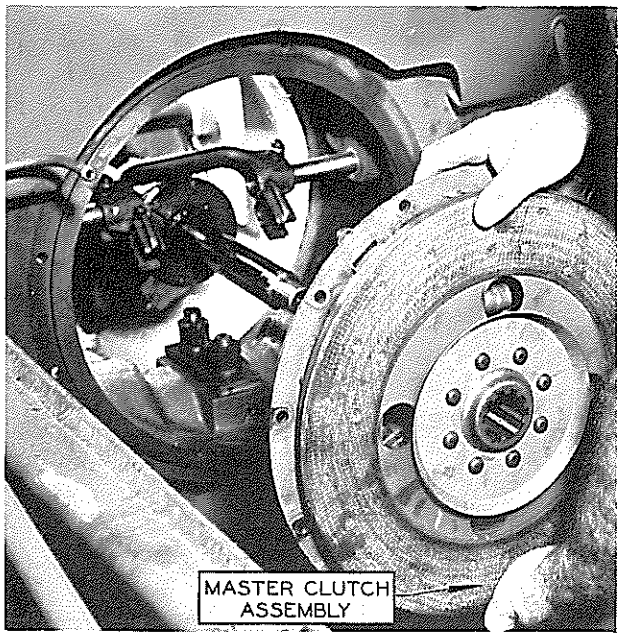

FIG. 9

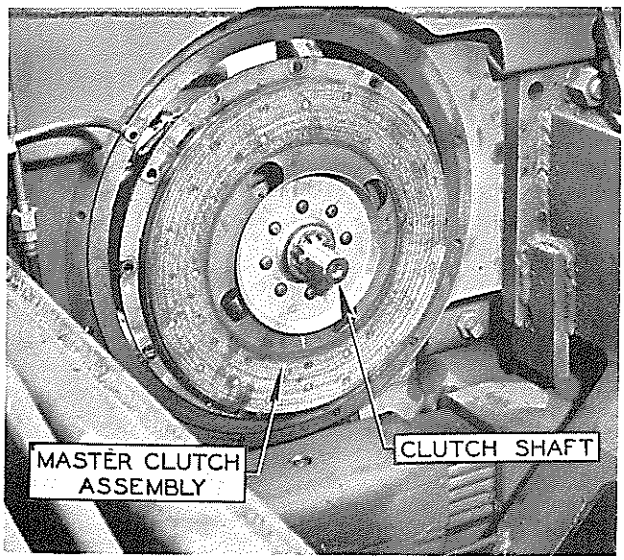

FIG. 10

2. Care should be taken to see that the slots on the throw-out yoke fit in place on sliding blocks on release yoke. Be sure the sliding blocks are placed on the release yoke so that the flanges are toward the bearing.
3. Install driven plate on splines of master clutch shaft with oil slinger toward front of tractor. Lubricate and place pilot bearing in flywheel.
4. Lower motor carefully and evenly until it is in place and clutch shaft enters pilot bearing in flywheel.
5. Bolt motor to spacer with the 10 capscrews.
6. Install the shims under each side of the motor support.
   NOTE: To inspect for the proper amount of shims, fasten motor securely to spacer assembly, loosen hoist, place enough shims on each side to raise motor $\frac{1}{16}$" from hanging position. This will relieve any strain from flywheel housing.

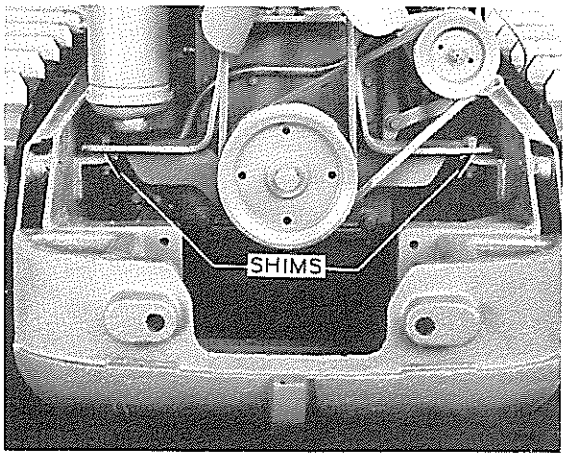

FIG. 11

7. Slide master clutch assembly to the flywheel and replace the 12 capscrews and lockwashers. Be sure to draw capscrews tight.
8. Reassemble tractor by following removal procedure in reverse.
9. To adjust the clutch brake, engage clutch and set clutch brake on shaft so that the face of the clutch brake is $1\frac{1}{16}$" to $1\frac{1}{8}$" from the back side of the release bearing cage then tighten bolts.
10. Adjust master clutch. Refer to Topic 52.

75 -- "HD 10" Motor Removal and Installation

It will be necessary to have the following equipment or its equivalent on hand in order to remove the motor from the tractor.

One ton hoist.

About ten feet of ½" cable or a section of ⅜" chain.

One motor stand or sufficient wood blocks to support motor.

Ample supply of cleaning fluid available in clean container.

At least 6 clean containers for holding nuts, bolts, capscrews, etc.

A. REMOVAL OF MOTOR FROM TRACTOR

1. Disconnect ground terminal connection from battery post.
2. Loosen clamp bolts and remove pre-cleaners.
3. Loosen bolts at each corner of hood and remove hood.

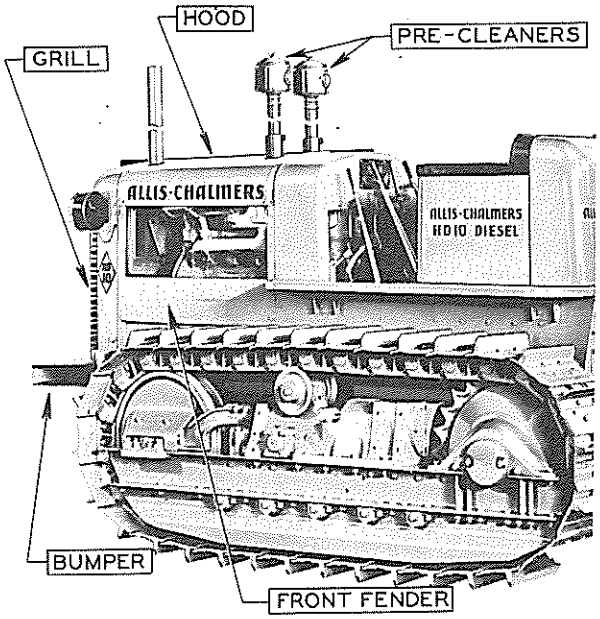

FIG. 1

4. Remove right and left hand fenders by removing 2 bolts, and 6 capscrews.
5. Remove radiator grill by taking out four T-bolts on each side.
6. Remove pin from radiator shutter control rod.
7. Drain cooling system by opening the two drain cocks.
8. Loosen upper and lower radiator hose connections.
9. Take out 3 capscrews from each side of radiator shell and 2 capscrews holding bumper. Now bumper can be removed. Then radiator and shell removed as a unit.
10. Shut off fuel supply under tank by turning shut-off cock handle. Fig. 3.
11. Disconnect fuel pressure gauge line at top of fuel filter, care must be taken not to twist flexible hose. Fig. 4.
12. Disconnect oil pressure gauge line at union at rear right side of motor. Fig. 4.
13. Loosen and remove temperature gauge tube at rear end of water manifold.

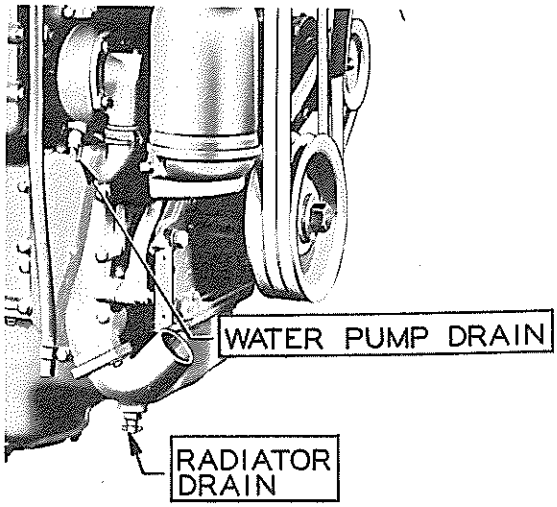

FIG. 2

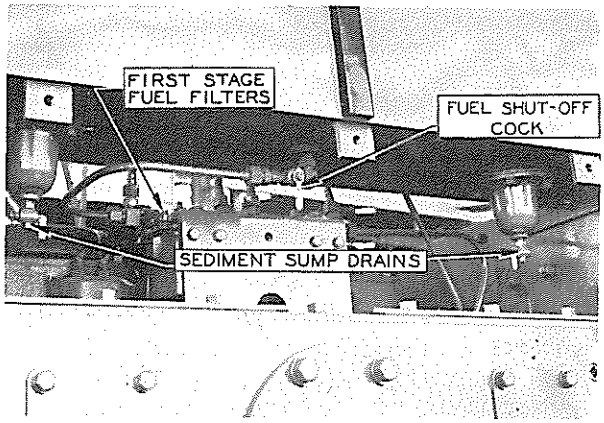

FIG. 3

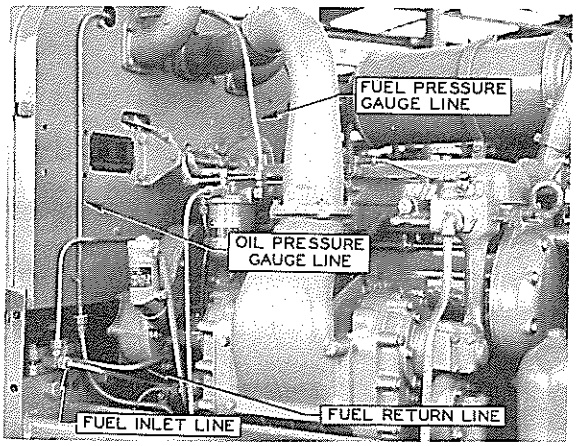

FIG. 4

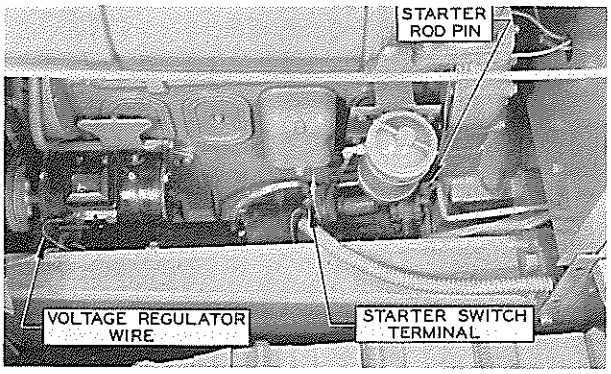

FIG. 5

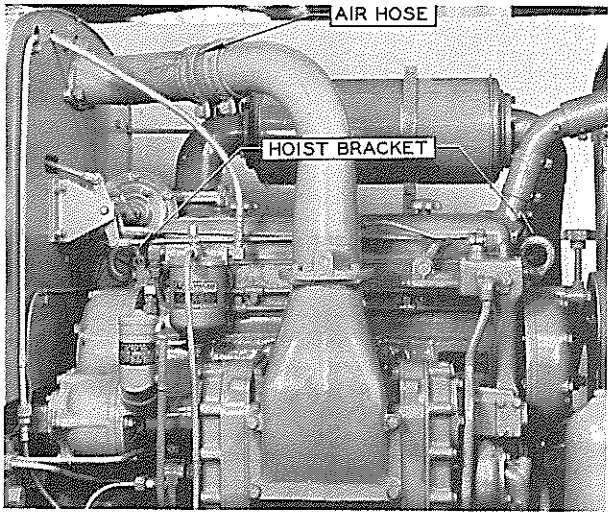

FIG. 6

14. Disconnect fuel oil inlet line from transfer pump. Fig. 4.
15. Disconnect fuel oil return line at rear of fuel manifold. Fig. 4.
16. Disconnect fuel oil inlet and outlet lines at cowl.
17. Remove throttle rod and fuel shut-off rod.
18. Loosen hose clamps on air tube and intake elbow. Fig. 6.
19. Remove 2 capscrews holding lower water connection to oil cooler.
20. Remove generator wire from outside of voltage regulator. Fig. 5.
21. Remove both wires from outside starter switch terminal. Fig. 5.
22. Disconnect head light wires at fuse connection underneath generator. Take care that fuse is not lost.
23. Disconnect air heater line at check valve underneath air heater. Remove clamp on line holding it to timing gear housing.
24. Remove 2 capscrews from air heater cover and move cover out far enough to disconnect wire from bottom of coil.
25. Remove cotter pin and pull yoke pin from starter rod. Fig. 5.
26. Engage master clutch.
27. Remove clutch inspection hole cover and remove yoke pin from end of clutch control rod.
28. Remove nut from grease tube on top of clutch housing and push grease tube down into clutch compartment.
29. Remove air cleaner oil cups.
30. Remove 3 bolts from each side that hold the cowl to the rear fender; pick the cowl up and set it on the top of seat and tank.
31. Remove the 10 capscrews that hold the motor to the spacer housing.
    NOTE: A 9/16″ box wrench can be heated and bent as shown in Fig. 7 to remove the 2 lower capscrews.

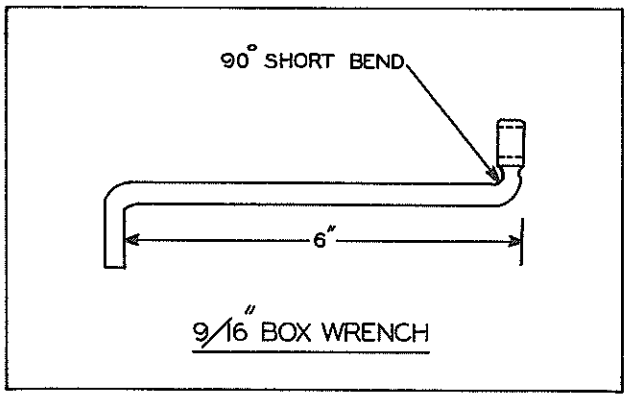

FIG. 7

32. Remove the 2 bolts from the front motor support and take out shims.
    CAUTION: Save shims so they can be replaced on the same side from which they were removed.
33. Motor can now be removed by chain hoist connected to lifter brackets. Fig. 6. Support weight of motor on hoist, then slide motor forward far enough to clear throwout bearing from clutch shaft. Then motor can be lifted out and placed on a stand or wood blocks.

B. INSTALLATION OF MOTOR

1. Do not attach clutch assembly to flywheel. Place clutch assembly on clutch shaft.
2. Care should be taken to see that the slots on the throwout yoke fit in place on sliding blocks on release bearing carrier. Be sure the sliding blocks are installed on the release bearing carrier with the flanges toward the bearing.
3. Place drive disc on shaft, oil slinger toward motor.
4. Lower motor carefully and evenly into the motor support, until there is 1¼″ space between the flywheel housing and motor spacer.
5. Slide clutch assembly forward, install and lock 9 capscrews holding clutch assembly to flywheel. The capscrews must be installed through the 1¼″ opening left between flywheel housing and motor

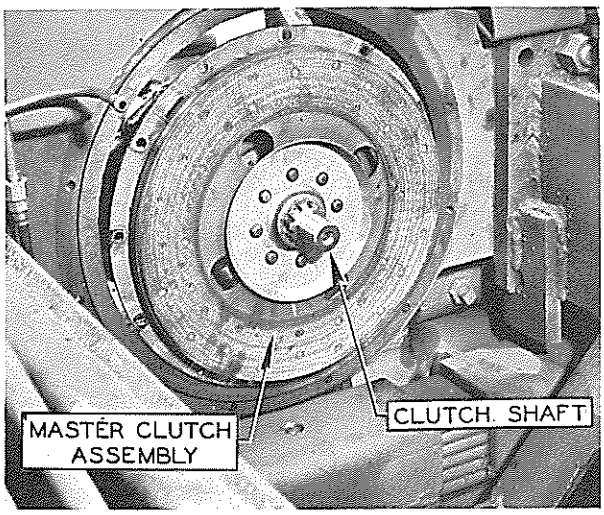

FIG. 8

spacer.

6. Push motor back into its installed position, line clutch shaft into pilot bearing.
7. Install under each side of the front motor support shims that were removed. Fig. 9.
   NOTE: To inspect for the proper amount of shims, fasten motor securely to spacer assembly, loosen hoist, install enough shims under each side to raise front of motor 1/16″ from hanging position; this will relieve any strain from flywheel housing.
8. Bolt motor to spacer.
9. Reassemble tractor by following the removal procedure in reverse.
10. To adjust the clutch brake, engage the clutch and set clutch brake on shaft so that the face of the clutch brake is $1\frac{1}{16}$″ to $1\frac{1}{8}$″ from back side of the release bearing cage.

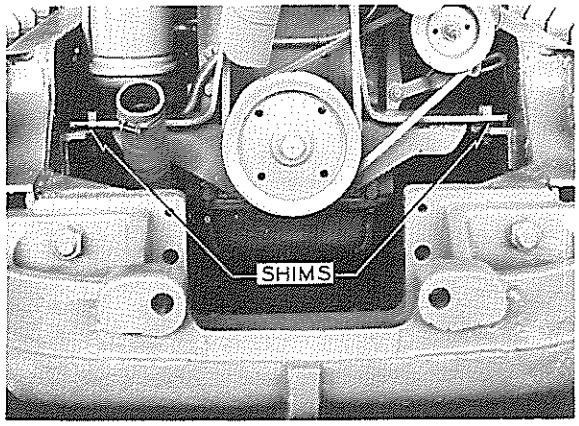

FIG. 9

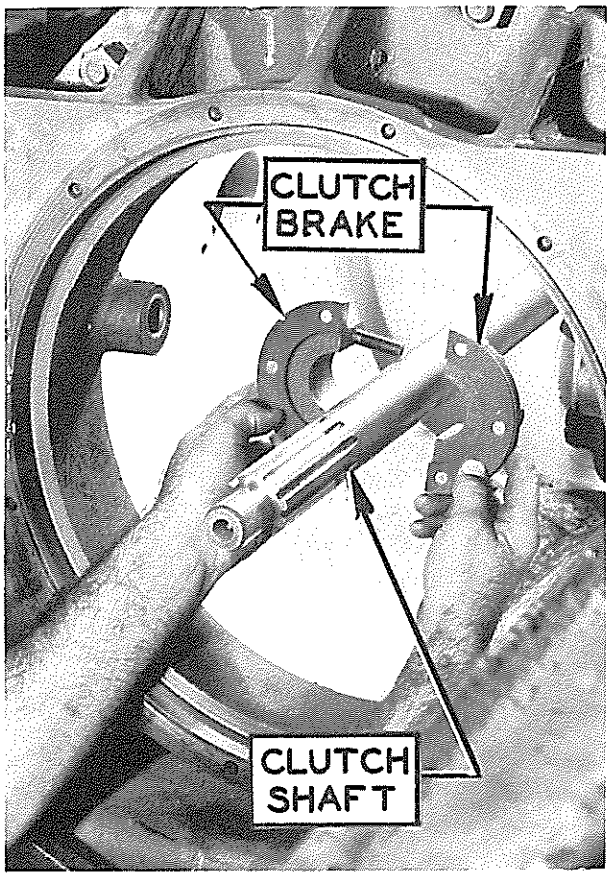

FIG. 10

76 -- "HD 14" Motor Removal and Installation

It will be necessary to have the following equipment or its equivalent on hand in order to remove the motor from the tractor.

One ton hoist.

About ten feet of ½" cable or a section of ⅜" chain.

One motor stand or sufficient wood blocks to support motor.

Ample supply of cleaning fluid available in clean containers.

At least 6 clean containers for holding nuts, bolts, capscrews, etc.

A. REMOVAL OF MOTOR FROM TRACTOR

1. Loosen clamp bolts and remove pre-cleaners.
2. Loosen bolt and nut on each corner of hood and remove.
3. Remove right and left front fender by removing 4 capscrews and bolts on each side.
4. Remove radiator grill by taking out 4 nuts on each side of radiator pushing

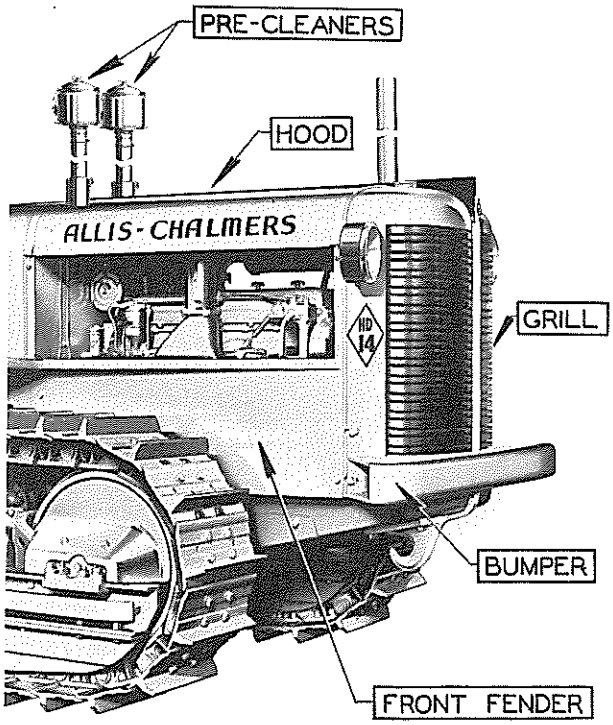

FIG. 1

T-bolts forward.

5. Remove pin from radiator shutter control at top of radiator on left side.
6. Remove bottom baffle under radiator by taking out 2 bolts.
7. To remove bumper, take out 2 capscrews on each side; also 2 capscrews on inside of radiator shell.
8. Drain radiator by opening two drain cocks, one located under water pump and one under lower hose connection.

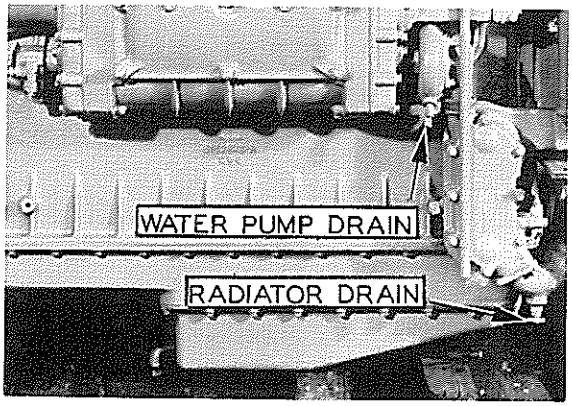

FIG. 2

9. Loosen top and bottom radiator hose clamps.
10. Disconnect head light wire under generator at fuse connection. Be careful that fuse is not lost.
11. Remove radiator shell and core as a unit, by removing the 2 remaining capscrews

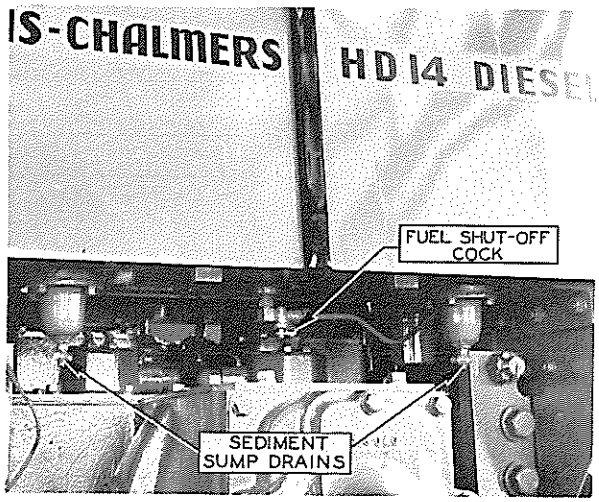

FIG. 3

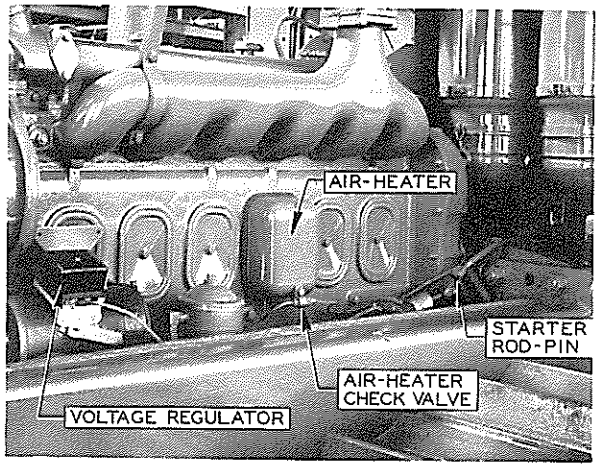

FIG. 4

from each side of radiator shell.

12. Remove generator wire from outside of generator voltage regulator. Fig. 4.
13. Remove the cable and wire from the outside starter switch terminal. Fig. 4.
14. Disconnect air heater line at check valve and remove clamp on line holding it to motor.
15. Remove cover from air heater and disconnect wire from coil
16. Remove clamp holding wires to motor between starter and primary oil filter.
17. Remove temperature gauge tube at rear of water manifold.
18. Remove pin from starter rod at starter. Fig. 4.
19. Shut off fuel supply under fuel tank.

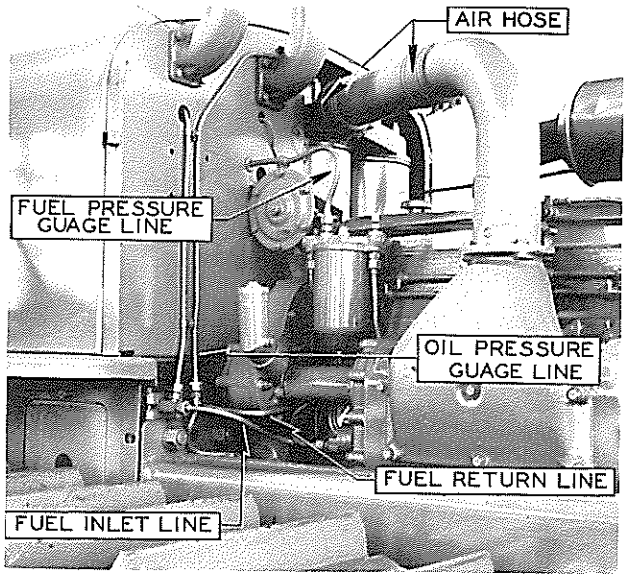

FIG. 5

20. Disconnect fuel pressure line at top of filter, taking care not to damage flexible hose.
21. Disconnect oil pressure gauge line, fuel oil inlet line and fuel oil return line at unions located at lower right front of cowl.

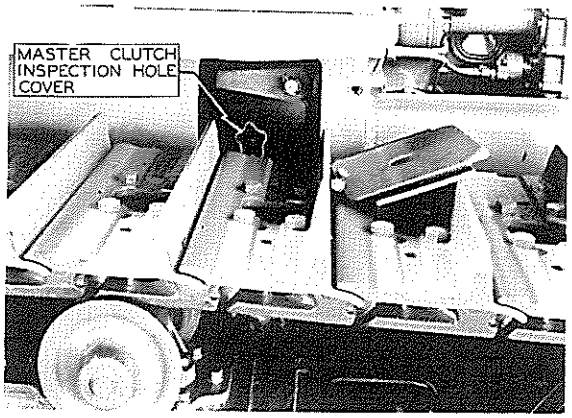

FIG. 6

22. Remove clamp holding oil pressure gauge line to motor support.
23. Remove pins from rear of throttle control, also fuel and air shut off rods.
24. Loosen hose clamps on air intake and remove connecting tube.

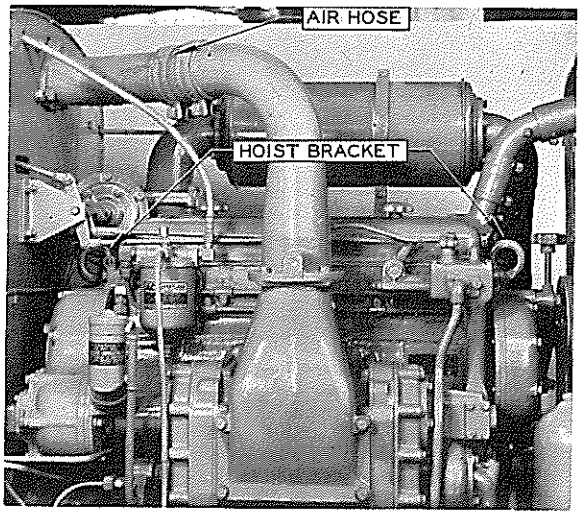

FIG. 7

25. Loosen track release yoke by screwing adjusting screw in.
26. Remove support rollers, by removing the 2 capscrews.
27. Track will now rest on track release housing, giving more room to work.
28. Remove inspection cover on each side of rear fender by removing 2 capscrews in each.
29. Remove inspection cover plates from each side of spacer assembly. Fig. 6.
30. Remove lock nut from master clutch release bearing grease tube.
31. Remove pin from front end of master clutch rod.
32. Remove 9 capscrews holding motor to spacer assembly. These are located in-

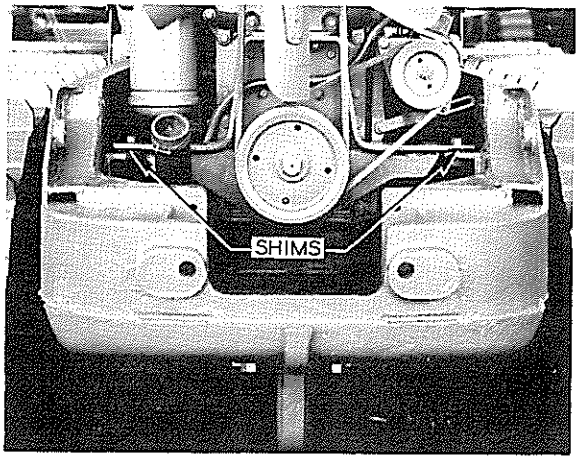

FIG. 8

side of spacer assembly and have to be removed through clutch inspection holes.

33. Remove 2 front motor support bolts and be sure to keep shims on respective sides.
34. Remove elbow on lower end of oil cooler by removing 2 capscrews.
35. The motor can now be removed from tractor by using chain hoist.

    NOTE: Use chain or ½" cable through engine hoist brackets.
36. Take weight of motor on chain hoist and push motor forward until throwout bearing clears the end of clutch shaft. Lift motor out.

B. INSTALLATION OF MOTOR

1. Place clutch sleeves and release bearing carrier on clutch shaft. Install master clutch on flywheel with the drive disc oil slinger toward the front.
2. Place motor in frame by lowering evenly until clutch driven disc will start over end of clutch shaft. Push motor back, making sure that the splines in clutch drive disc assembly mate with splines on clutch shaft.
3. Install 9 capscrews holding motor to spacer assembly.
4. Install under each motor support, shims that were removed.

    NOTE: To inspect for the proper thickness of shims, when installing motor, fasten motor securely to spacer assembly, loosen hoist, place enough shims on each side to raise motor $\frac{1}{16}$". This will relieve any strain from flywheel housing.
5. Install the 3 link pins in the clutch sleeve and connecting links.
6. Adjust clutch brake on shaft 1-1/16" to 1⅛" from release bearing cage, after clutch is properly adjusted and engaged.
7. From this point on, reverse dismantling procedure.

    Alternate method:

NOTE: The complete master clutch can be installed on the clutch shaft before the motor is lowered into place. The motor is then set into place and bolted to the spacer. Push the clutch assembly against the flywheel and install the 9 capscrews that hold the clutch to the flywheel. It may be necessary to move the clutch up and down to get the holes in the clutch, to line up with those in the flywheel. When tightening the capscrews be sure the clutch is not "cocked" on the flywheel. By turning the motor over by hand each capscrew can be tightened in front of the inspection hole in the spacer housing.

77 -- Unit Injector

IDENTIFICATION OF INJECTORS

The injectors used in the HD7, HD10 and HD 14 tractors can be identified either by the letter "A" stamped on the injector body, or by the number "60" stamped on a "BLUE" metal tag pressed into the injector body. Also make sure the end of the spray tip is marked "6-.006-155" or "6-.006-155-O".

Installation of any injector assembly other than the ones described above will result in serious damage to the engine.

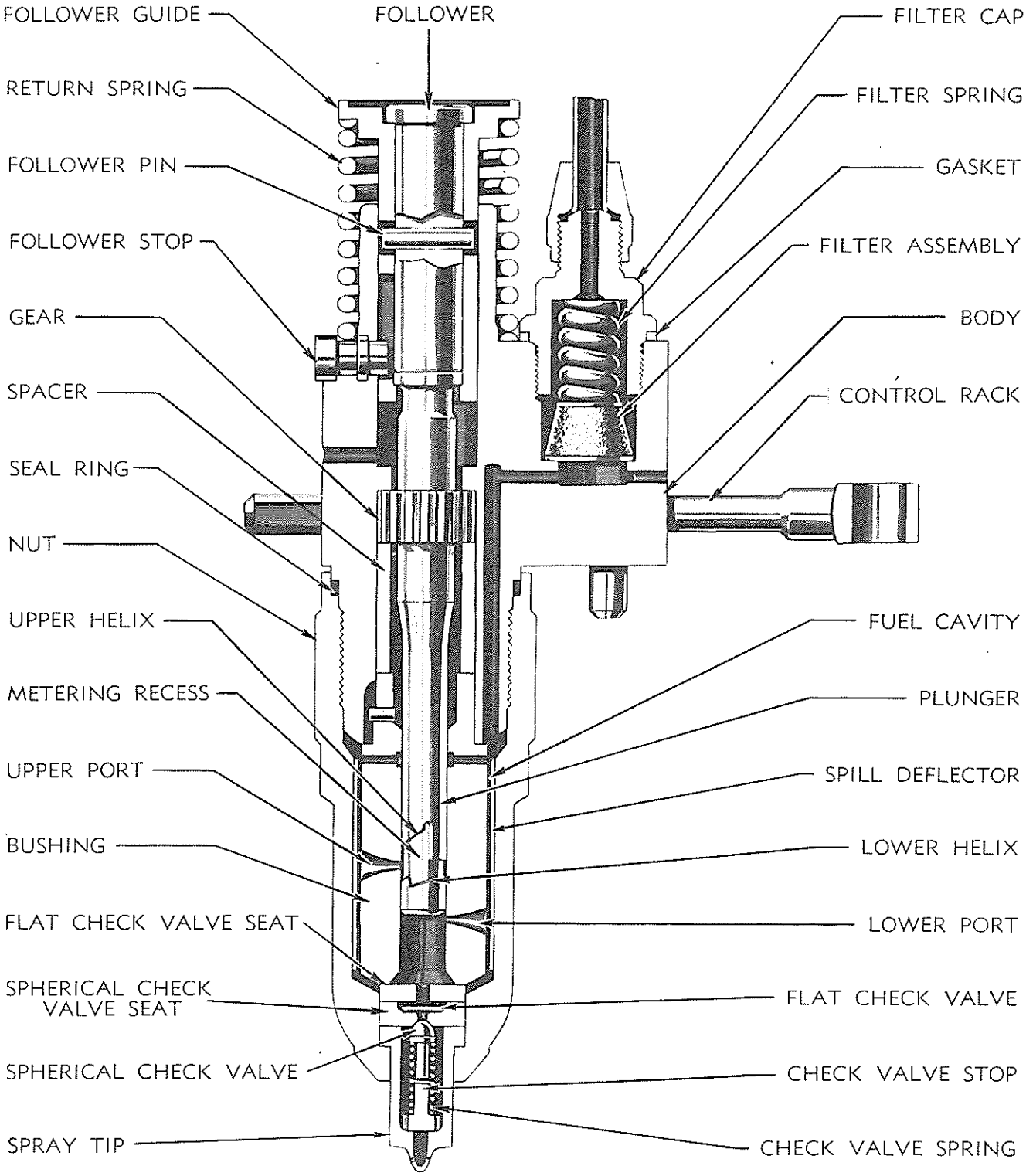

FIG. 1

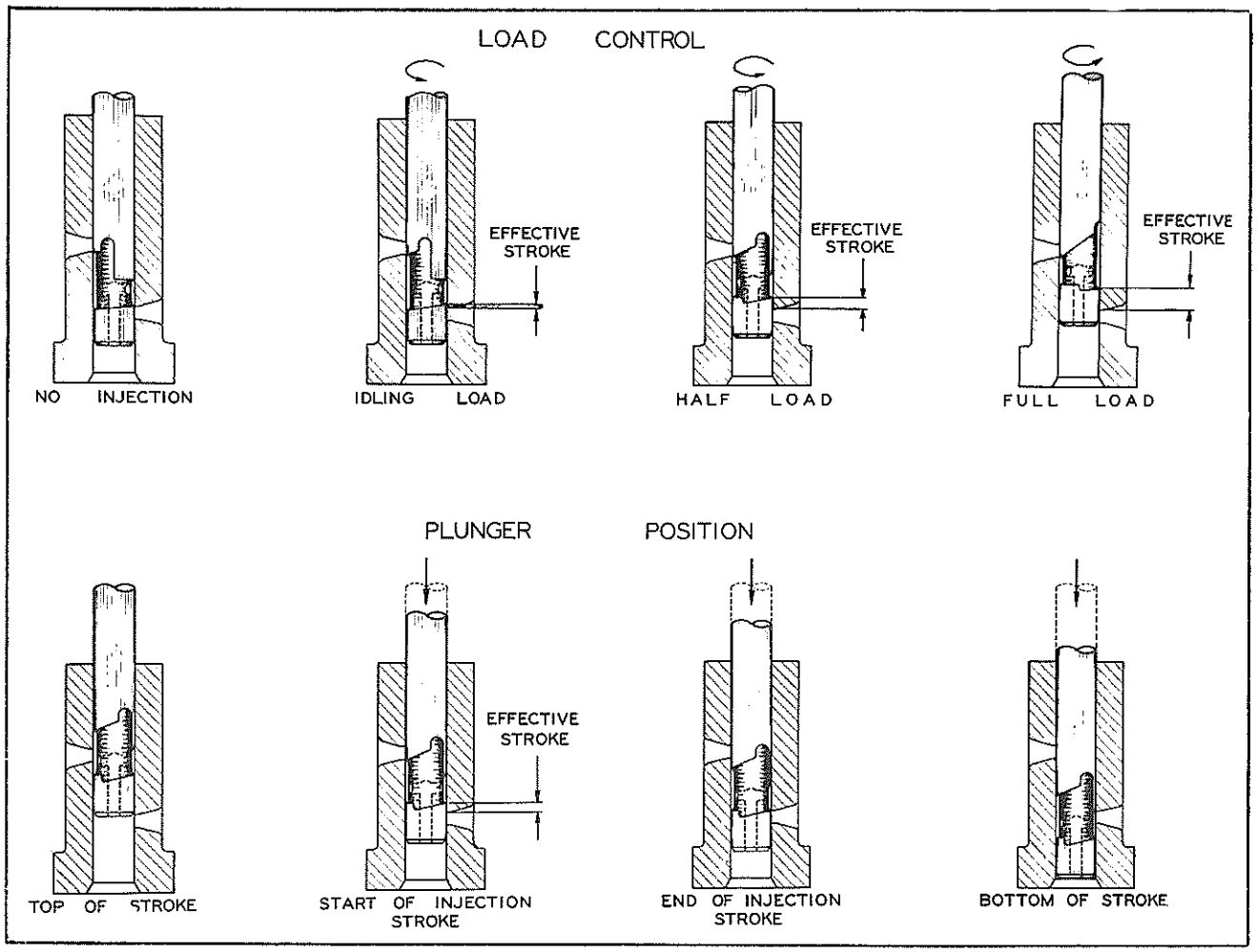

FIG. 2

DESCRIPTION—The cross section of the Model 71 Injector, illustrated in Fig. 1 shows the fuel injector parts. Fuel oil is supplied to the injector at a pressure between 25-65 pounds per square inch and enters the steel body at the top through the filter. After passing through the fine-grained filter element in the inlet passage, the fuel oil fills the annular supply chamber between the bushing and the spill deflector. The plunger operates up and down in this bushing, the bore of which is connected to the fuel supply in the annular chamber by two funnel-shaped ports.

The motion of the injector rocker arm is transmitted to the plunger by the follower which bears against the return spring. In addition to this reciprocating motion, the plunger can be rotated, in operation, around its axis by the gear, which is in mesh with the control rack. An upper helix and lower cut-off are machined into the lower end of the plunger for metering purposes. The relation of this helix and cut-off to the two ports changes with the rotation of the plunger. As the plunger moves downward, the fuel oil in the high-pressure cylinder or bushing is first displaced through the ports and back into the supply chamber until the lower edge of the plunger closes the lower port. The fuel oil is then forced upward through the center passage in the plunger into the recess between the upper helix and the lower cut-off from which it can still flow back into the supply chamber until the helix closes the upper port. When the upper port closes, injection starts and continues until the plunger moves down and uncovers the lower port at the lower helix, which is the end of injection period. When the lower helix uncovers the lower port, the pressure is released through the center passage in the plunger into the recess of the helix and out through the lower port into the supply chamber. The rotation of the plunger, by changing the position of the helix, retards or advances the closing of the ports and the beginning and ending of the injection period, at the same time increasing or decreasing the desired amount of fuel which remains under the plunger for injection into the cylinder.

Fig. 2 shows the various plunger positions from FULL INJECTION to NO INJECTION. With the control rack pushed IN com-

pletely (full injection), the upper port is closed shortly after the lower port has been covered, thus producing a full effective stroke and maximum injection. With the control rack pulled OUT completely (no injection), the upper port is not closed by the helix until after the lower port is uncovered. Consequently, with the control rack in this position, all of the fuel charge is forced back into the supply chamber, and no injection of fuel takes place. From this NO INJECTION position to FULL INJECTION position (full rack movement) the contour of the helix advances the closing of the ports and the beginning of injection.

Fig. 2 shows four positions for the downward travel of the plunger. On the downward travel of the plunger, the metered amount of fuel is forced through the center passage of the valve assembly, past the flat check valve, shown in Fig. 1, and against the spherical check valve. When sufficient fuel pressure is built up, the spherical check valve is lifted off its seat and the fuel is forced through 6 small orifices in the spray tip and atomized in the combustion chamber. The check valve prevents air leakage from the combustion chamber into the fuel system in case the valve is accidentally held open by a small particle of dirt, thus allowing the injector to continue to operate until the particle works through the valve. On the return upward movement of the plunger, the high-pressure cylinder is again filled with fuel oil through the ports. The constant circulation of fresh, cool fuel through the injectors, which renews the fuel supply in the chamber, helps to maintain even operating temperature of the injectors, and also effectively removes all traces of air which might otherwise accumulate in the system and interfere with the accurate metering of the fuel. NO VENTING OF THE FUEL LINES OR INJECTORS IS REQUIRED AT ANY TIME, EVEN WHEN STARTING FROM "EMPTY."

The fuel injector outlet opening, which returns the excess fuel oil supplied by the fuel pump, is directly adjacent to the inlet opening, and is protected against dirt or other foreign matter by a fine-grained filter element, exactly like the one on the inlet side.

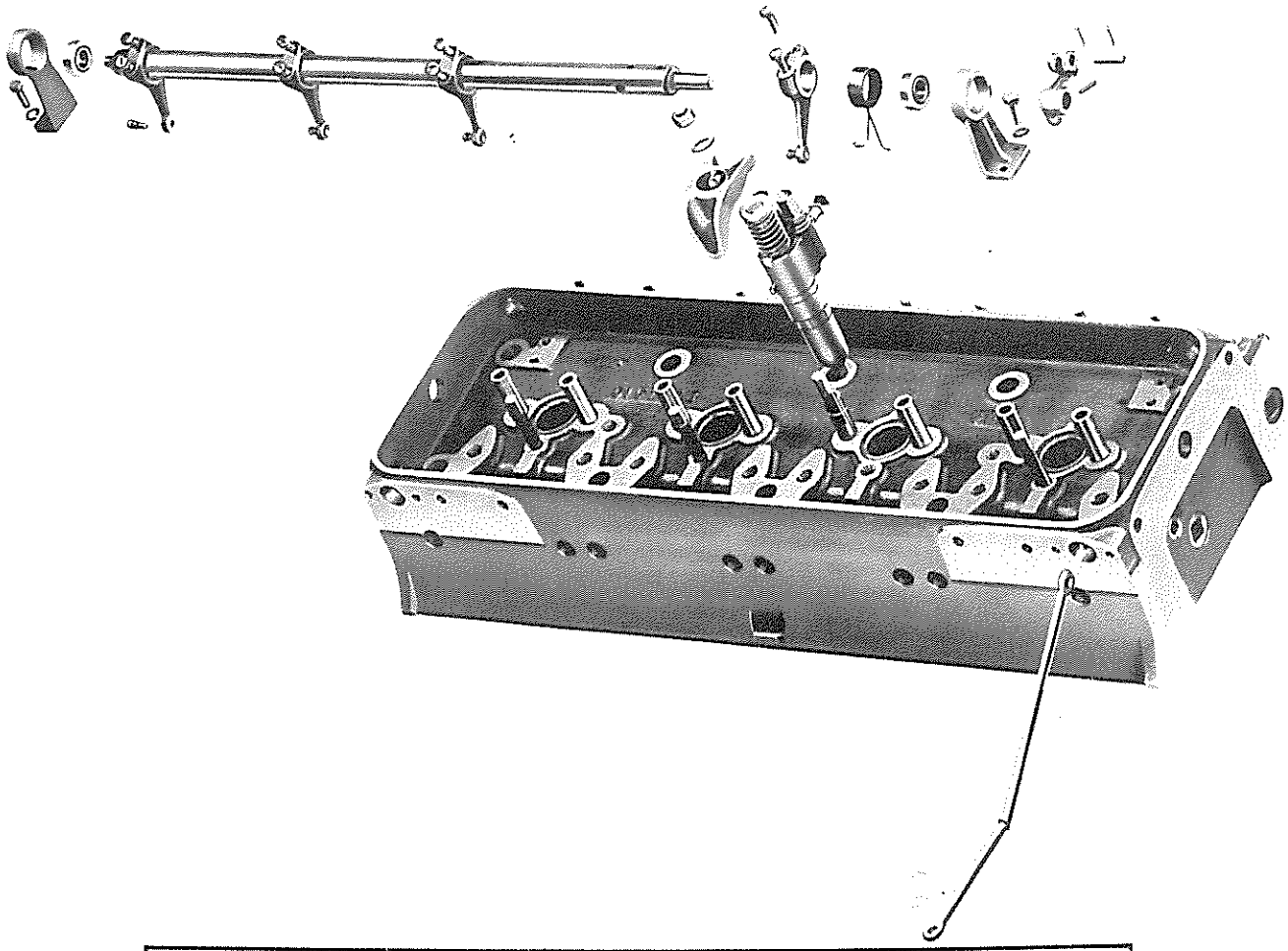

EXPLODED VIEW OF INJECTOR AND CONTROL RACK

FIG. 3

A. REMOVAL OF INJECTOR FROM HEAD

CAUTION: Cleanliness must be maintained at all times during the dismantling and assembling of the injector.

1. Remove hood from tractor.
2. Thoroughly clean cylinder head cover before removing. Remove cylinder head cover.
3. Disconnect fuel lines at injector and cylinder head fittings, placing them in a clean pan.
4. Place injector shipping caps on fuel openings in order to prevent any dirt from entering.
5. Turn engine over until rocker arms at cylinder from which the injector is to be removed are free (valves closed) and injector is at its highest point. Otherwise an undue strain will be put on push rods when rocker arm assembly is laid back out of the way.
6. Remove the 2 capscrews holding the rocker arm shaft brackets to cylinder head and fold back the rocker arms, rocker arm shaft and rocker arm shaft brackets.

   CAUTION: In laying the assembly back, care must be exercised to prevent bending a push rod. Lift up on entire assembly to compress the springs on lower end of push rods to allow assembly to be laid back properly.

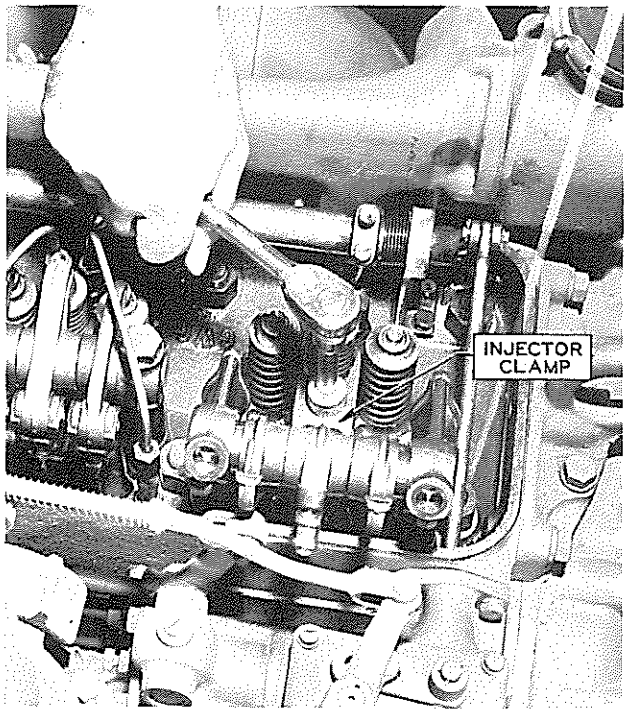

FIG. 4

7. Remove the injector hold down nut and clamp.
8. Pry injector from it's seat by means of the injector puller tool.

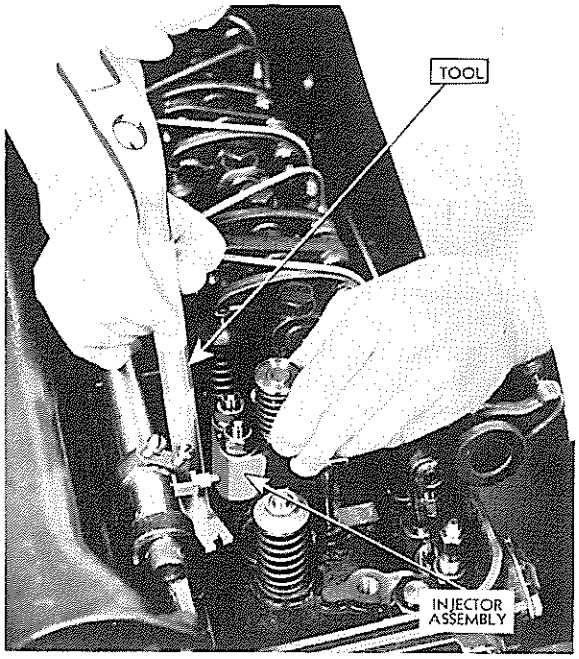

FIG. 5

9. Lift injector from seat at the same time disengaging the control rack linkage.
10. Replace cylinder cover to prevent any dirt entering the motor.

B. DISMANTLING THE INJECTOR

Before attempting to do any work on the injectors, it is very necessary that certain preparation be made. BE SURE to have a clean place to work. Have 2 small pans of clean fuel oil. As the injector is dismantled insert each part in the clean pans of fuel. Dismantle the injector as follows:

1. Support the injector right side up in a vise with the fixture as shown in Fig. 7 and loosen (not remove) the 2 fuel connections.

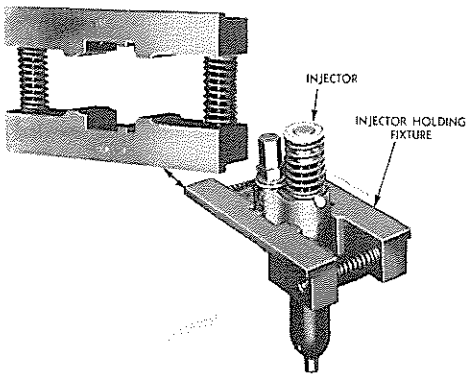

FIG. 7

2. Insert the tool beneath the spring as shown in Fig. 8 and raise spring away from follower stop; compress the spring

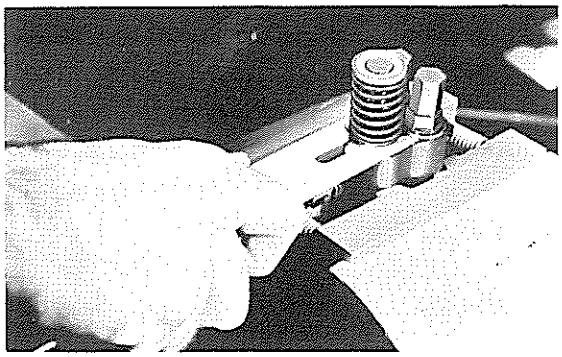

FIG. 8

and withdraw the follower stop.

3. Remove the plunger, follower guide, and follower pin from the injector body. Remove the follower pin from the follower guide and separate the parts.
4. Invert the injector in holding fixture. Clamp in vise and loosen (not remove) nut with special wrench as shown in Fig. 9.

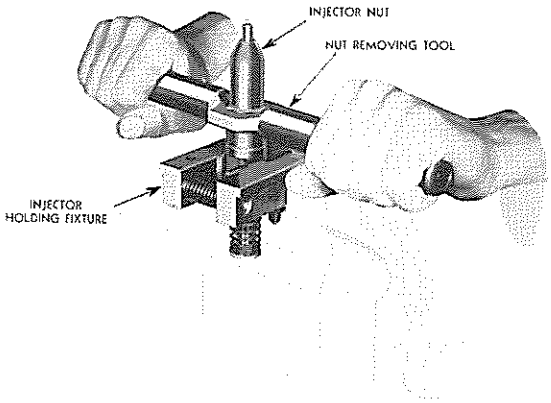

FIG. 9

5. Holding the injector in an inverted position, unscrew nut and lift away from the injector body, being careful not to dislodge the spray tip and the other small parts resting on the end of the plunger bushing.
6. Carefully lift the spray tip, spherical check valve, spherical valve spring, spring stop, flat check valve, check valve seat, and spherical valve seat away from the plunger bushing.
7. Jar the spill deflector from the nut.
8. Jar the spacer and gear from the inpector body.
9. Pull the rack from the injector body.
10. Remove the 2 fuel connections, 2 filters, and the 2 springs from the injector body.

NOTE: Should more than one injector be dismantled BE SURE that all parts for each injector are kept together.

C. INSPECTION

Many of the close fittings parts in the injector are very carefully lapped. If any of the internal working parts of the injector become scored these parts are unfit for further use and new parts must be installed.

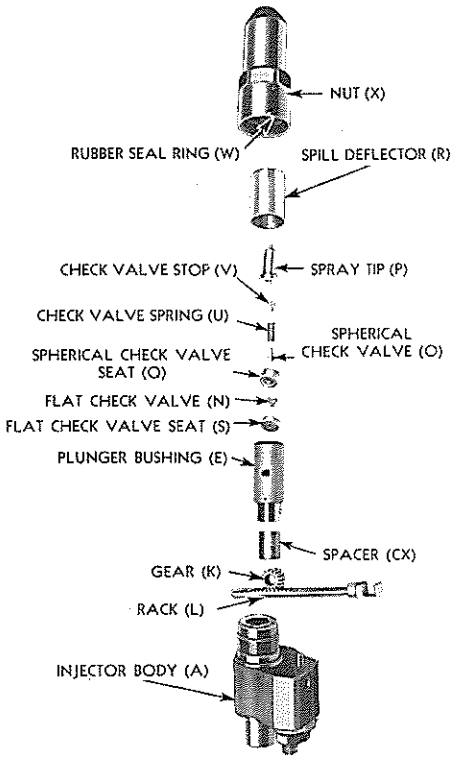

FIG. 10

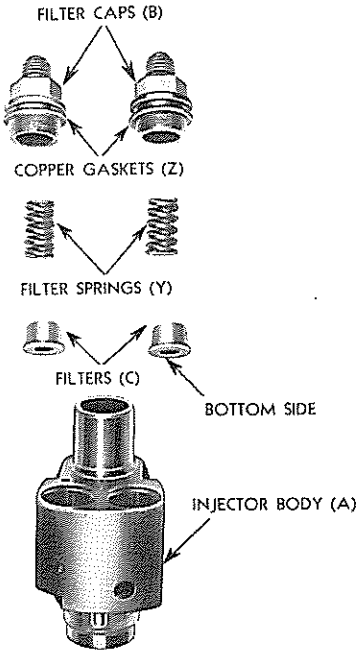

FIG. 11

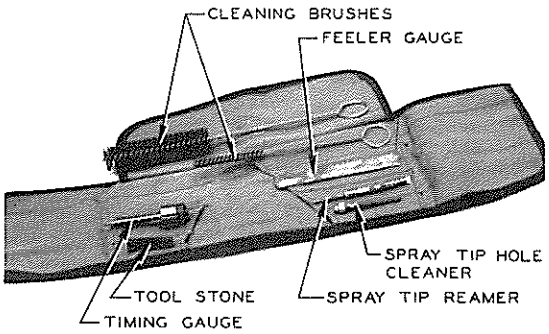

FIG. 12

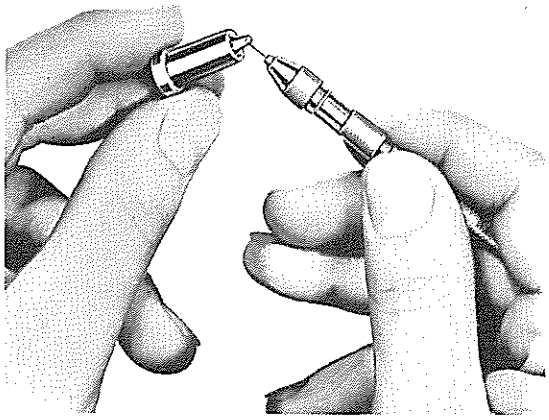

FIG. 13

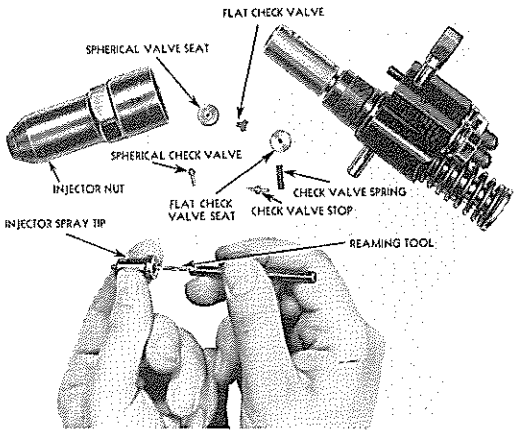

FIG. 14

After the injector has been disassembled all parts must be carefully protected from dirt and stored so that parts will not be misplaced until used. Note the caution on cleanliness at the beginning of this section. Having cleaned all parts thoroughly examine all mating parts for free movement then clean the injector tips as shown in Figs. 13 and 14.

D. INJECTOR TIP AND VALVE ASSEMBLY

Effective on engine serial Nos. 371429, 4716652 and 67120871, a new spray tip and flat check valve assembly are used in the injectors. These injectors can be identified by the letter "O" stamped on the end of spray tip.

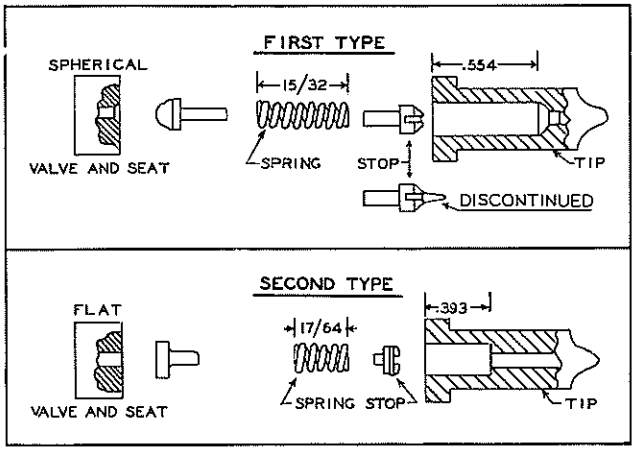

FIG. 15

1. The 2nd type parts as shown cannot be used in injectors built previous to this change, unless all the new parts as listed in the parts book supplement are used. This spray tip and valve assembly service unit is carried under part No. 5227324. The 1st type parts are still serviced separately for the first type injectors.
2. The 2nd type injector check valve, as shown in Fig. 15, has a flat surface contact with the double check valve seat, whereas the former valve, as shown, 1st type, was spherical and seated accordingly. The 2nd type valve may require occasional lapping, and this lapping can be accomplished in the field successfully; whereas the spherical check valve could not.
3. Because of its size, the 2nd type injector check valve requires extreme care in servicing. When lapping the check valve, a perfectly flat surface is necessary. Either a lapping block or a piece of first grade plate glass at least four inches long may be used.

   NOTE: In lapping the check valve, Carborundum H-40 lapping cream, or equivalent, should be used with either the lapping block or the piece of plate glass.
4. The following steps must be followed for the correct lapping of the injector check valve:
   a. Put a small spot of cream on the lapping block.
   b. With check valve held between the thumb and the middle finger, apply a light pressure on the check valve while drawing the check valve across the lapping block in a straight line.
   c. After each stroke, thoroughly clean the valve with fuel oil, dry and in-

spect by holding to the light to observe differences of light reflection as an indication of valve flatness.

d. If valve is perfectly flat, it will present a uniform appearance when held to the light and rotated.

5. The surface of the check valve seat must be lapped as carefully as the check valve. This is done in the same manner, using the same lapping block and cream.
6. The second type injector has all of the same operating characteristics as the injector equipped with the spherical valve except when the new injector is tested by "popping the injector" it will not make the chirping sound.

E. ASSEMBLING THE INJECTOR

Before starting to assemble an injector, it is necessary to have an extremely clean work bench on which to work and store the parts. Care must be taken when assembling, to place the various parts in their proper relative position. The accompanying figures should be thoroughly studied before attempting the assembly.

1. To assemble filter, hold the injector body Fig. 11 right side up, place one of filters in each of the fuel cavities in the top of the injector body. When assemblying the filters always have the washer at the bottom as shown in Fig. 11. Whenever the injector is dismantled install new filters. Place a spring above each filter, a copper gasket up against the shoulder of each filter cap, lubricate the threads and tighten the filter caps in place in the injector body. Whenever a filter cap is removed from the injector body use a new copper gasket under each cap.
2. Rack and gear assembly. Note that two of the teeth of the injector rack have a drill spot mark on the one end; also one tooth of the mating gear is similarly marked. When the rack and gear are assembled, the marked tooth of the gear engages between the two marked teeth on the rack. This relation of rack and gear must be maintained for proper timing of the injector.
3. Hold the injector body bottom end up and slide the rack through the 1/4 inch (approx.) hole in the body so the two marked teeth can be observed when looking from the bottom into the bore of the gear. See Fig. 10. The injector rack can be placed in the injector body in only one position and have the teeth marks show in the opening of the gear.
4. Now, holding the rack in position so the teeth marks show, slide the gear into the proper engagement with the rack.
5. Slide spacer down on top of gear. Slide plunger bushing down onto spacer with locating pin in bushing guided into slot of injector body.

NOTE: The flat check valve seat and spherical check valve seat should be lapped on both sides (Fig. 16) before being put into the injector assembly. Also the flat side of the injector tip and the end of the plunger bushing that butts up to the flat check valve seat must be lapped.

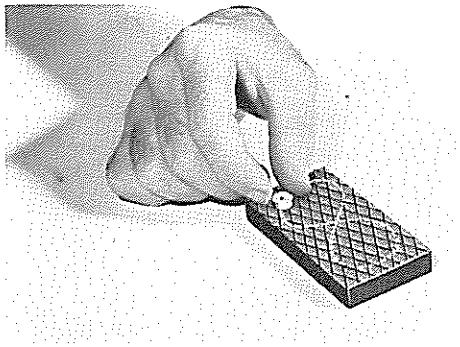

FIG. 16

6. Slide rubber seal ring down over threads to shoulder of injector body. Slide the spill deflector down over the plunger bushing.
7. Place flat check valve seat flat down on clean piece of paper, place flat check valve on seat and spherical check valve seat cupped side down over check valve. Note that one surface of the check valve seat is cupped for the check valve and the other surface has a small conical seat at the center for the spherical valve.
8. Holding the spray tip point down, place the check valve stop, (small end down), into the injector tip. Place spring over end of stop and drop spherical check valve down into spring with the spherical end up.
9. Hold injector body in the vise bottom end up, then centrally place the check valve assembly on the end of the plunger bushing and place the tip assembly and spherical seat down on the top of the check valve assembly.
10. Lubricate the threads on the nut; put a piece of 1/4" or 5/16" copper tubing through the hole in the nut. Place the copper tubing over the end of the injector tip and slide the injector nut down into place.
11. Screw the nut in place BY HAND and at the same time move the copper tubing up and down and around in a circle so the spherical valve assembly will fit into the injector nut correctly. As long as the injector tip will move up and down do not put a wrench on the nut.

When everything is in place the injector nut will hold the tip assembly down firm when tightened by hand.

12. Tighten the injector nut with special wrench. Fig. 9.
13. Plunger and Follower Assembly: Insert the plunger large end up into follower guide. Insert follower, large end up into follower guide. Slide follower pin through hole in follower guide and follower; drop this assembly through follower spring so head of follower seats into counterbored head of follower guide.
14. Invert the position of the injector in the vise (right side up). Hold the control

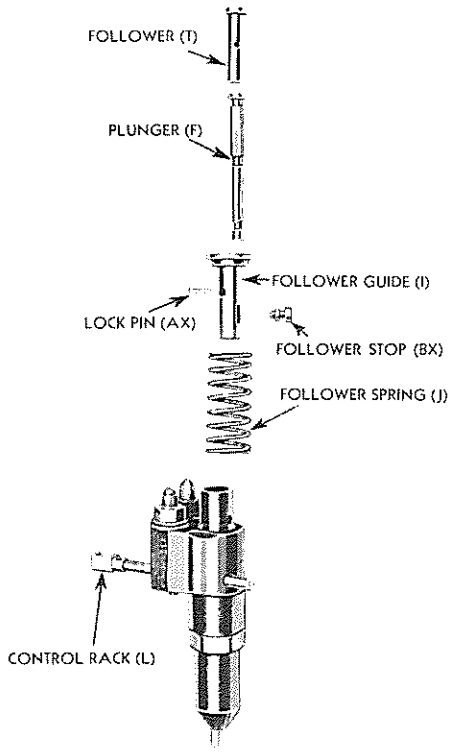

FIG. 17

rack in; slide the plunger assembly in top of injector body, so the flat side of the plunger will engage the flattened side of gear.

15. Align holes in the follower guide and injector body for the follower stop beneath the return spring, then insert slotted wedged end of injector spring lifter tool beneath the spring end, push down on top of the follower and insert the follower stop pin. Fig. 8. When the injector spring lifter tool is removed, the spring will hold the follower stop in place.

NOTE: Try injector rack; if it works hard the injector must be dismantled and the parts inspected for burrs.

F. TESTING INJECTOR

1. After an injector has been rebuilt it should be tested before it is installed in the engine. This test is known as "Popping the Injector," and is accomplished with tool as shown in Fig. 18.

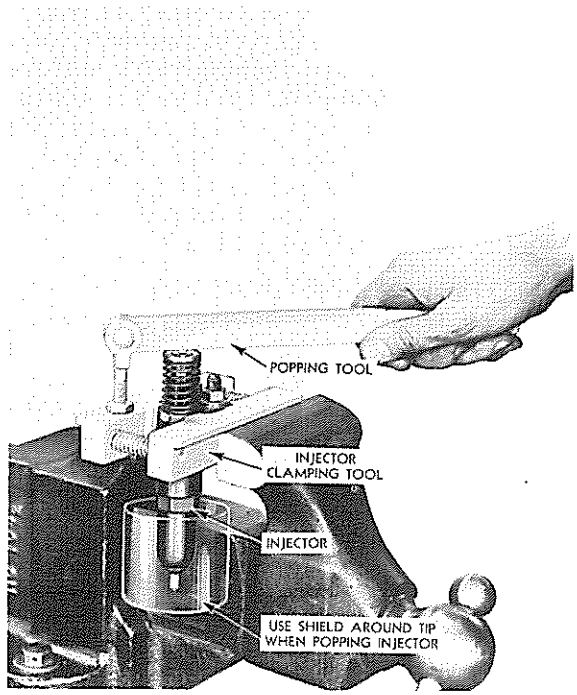

FIG. 18

2. To test you may also try depressing the plunger follower with the thumbs and fore fingers in order to find out if there is any sticking or binding which can be more easily detected than if a tool were used.
3. If plunger follower and spray tip are in good working order, the failure of an injector may be due to one or both of two causes.
   a. Clogged fuel passages in spray tip.
   b. Inoperative spherical valve.
4. Place injector in test fixture as shown and by means of an oil can, introduce fuel into one of the injector openings until fuel flows from the other opening. Set a beaker under and surrounding injector spray tip so fuel injected from tip hits inside of beaker.

   CAUTION: Always use beaker and keep hands away from spray tip when "popping" injector; otherwise the fuel from spray tip will penetrate the skin and may cause blood poisoning.
5. To determine if all six holes in tip are open, take a piece of paper and roll it similar to a 2″ mailing tube and place over spray tip; press the handle down on plunger follower with a quick motion after which withdraw paper roll

and count the spots on the paper.

6. If the check valve opening pressure is satisfactory, considerable downward pressure will be required on the fixture handle to open the check valve and discharge the fuel through the six holes. If considerable pressure is not required on the fixture handle to open the check valve so the fuel is discharged in a fog from the spray tip, the valve opening pressure is too low.
7. To test for a check valve leak, wipe or blow all fuel from spray tip and press down firmly on fixture handle to the point where check valve is about to open. (Do not force valve open). Continue to hold handle down against check valve pressure and observe whether or not dribble of fuel occurs at spray tip. If dribble occurs, check valve is not seating properly. If the injector does not pass the above three tests satisfactory, it should be disassembled, carefully and thoroughly cleaned and new parts installed for any worn or corroded parts.

G. INSTALLING THE INJECTOR

1. The injector is installed in the cylinder head by reversing the sequence of operations for removal. A dowel provided on the injector body registers with a hole in the cylinder head so the injector can be located in only one position. After locating the injector tighten in place with the hold-down clamp and nut and attach fuel lines to injector and fuel connections.
2. Every time an injector is removed from the engine it must be timed and equalized. See Topics 42 and 43.

78 -- Cylinder Head

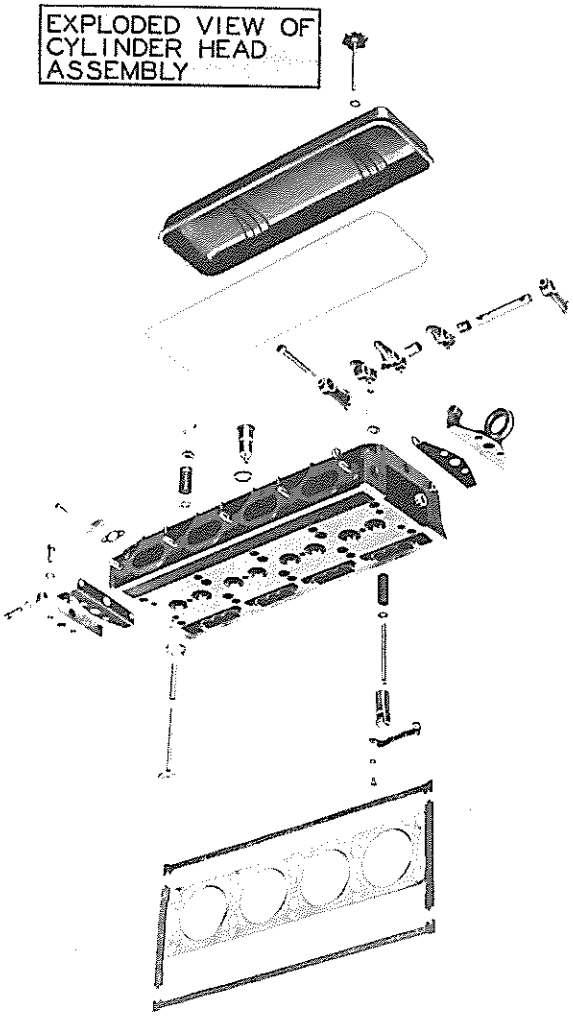

FIG. 1

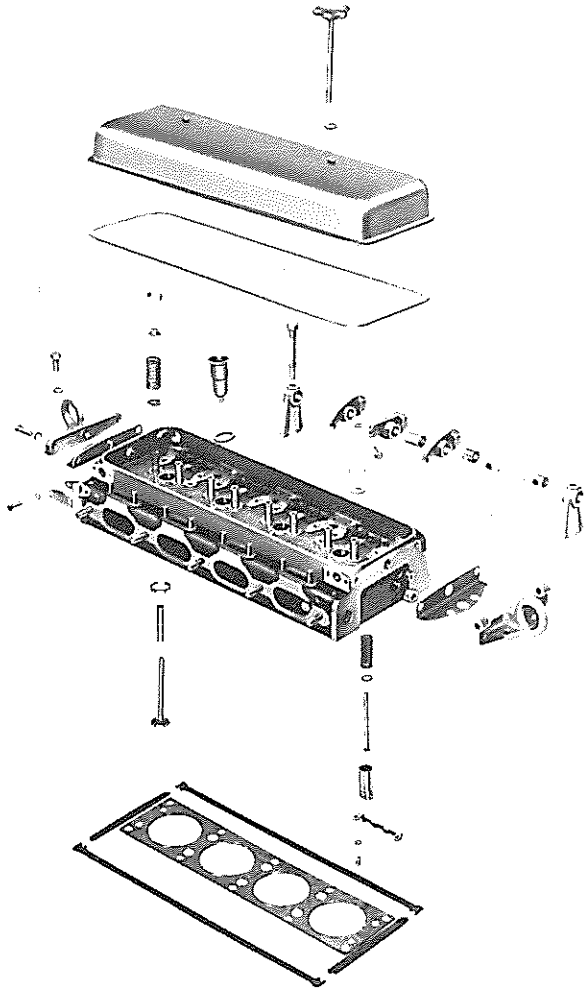

FIG. 2

DESCRIPTION — The cylinder head is a one-piece casting which can be removed from the engine as an assembly containing cam followers, guides, rocker arms and valves. The head is securely held to the cylinder block by heat-treated alloy steel studs.

Located in the head are two exhaust valves, a fuel injector, and three rocker arms, for each cylinder. The middle rocker arm operates the injector plunger; the other two operate the exhaust valves.

Hardened exhaust valve seats are expanded into the cylinder head. These seats furnish accurate seating of the valves under varying conditions of temperature, and materially prolong the life of the cylinder head. The hardened seats are accurately ground to very close limits and their freedom from warpage, under ordinary working conditions, reduces valve grinding to a minimum.

To insure efficient cooling, each fuel injector is inserted into a thin-walled copper tube passing through the water space in cylinder head. The lower end of the copper tube is pressed into the cylinder head and spun over; the upper end is flanged and sealed with a Neoprene seal. The spun-over lower end and sealed upper end, prevent any water leaks around the copper tube.

Two exhaust passages from each cylinder lead through a single port to the exhaust manifold. The exhaust passages, exhaust valve seats, and injector tubes are completely surrounded by cooling water.

To seal compression, a flat laminated gasket composed of steel sheets is provided between the cylinder head and top of cylinder block. A cork gasket around outer rim of head seals against oil leaks.

The top of the cylinder head is completely enclosed by an easily removable pressed steel valve rocker cover, which is held in place by screws fitted with hand knobs. The cover is sealed against leakage by a gasket which is held in place by a retainer and flanged edge of the cover.

A. REMOVAL OF CYLINDER HEAD

1. Loosen clamp nut and precleaner.
2. Remove hood by loosening a bolt at each corner.
3. Wash all dirt from top of motor.
4. Drain cooling system by opening petcock at lower side of water pump.
5. Remove 2 capscrews and separate water by-pass pipe from bottom of thermostat housing at front end of water manifold.
6. Loosen hose clamps on top radiator hose.
7. Loosen and remove water temperature fitting from rear end of water manifold.
8. Remove valve cover.
9. Remove 2 screws that hold breather pipe to governor control housing.

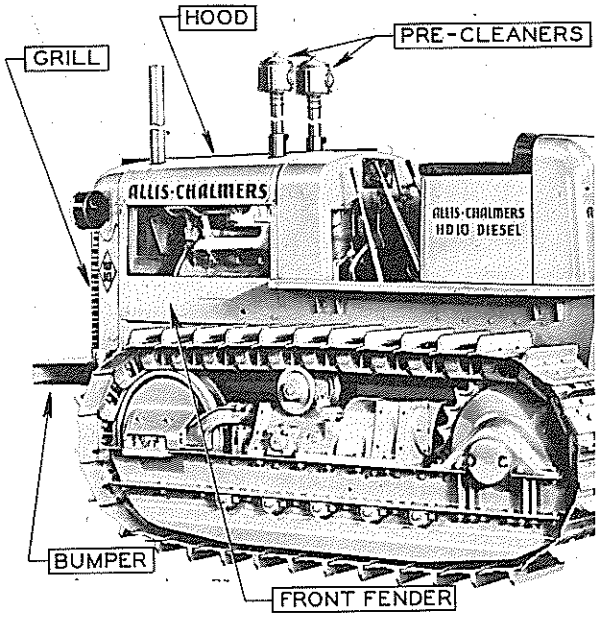

FIG. 3

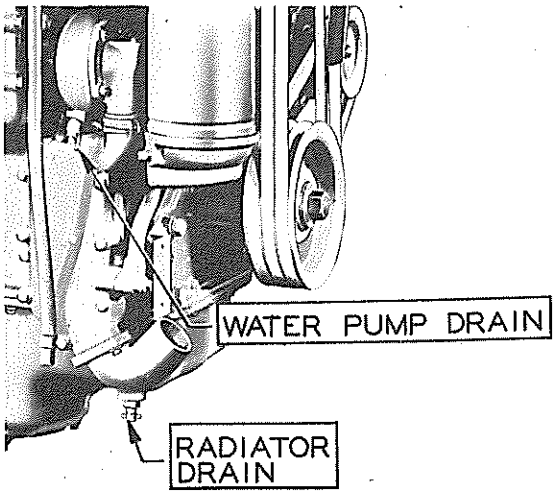

FIG. 4

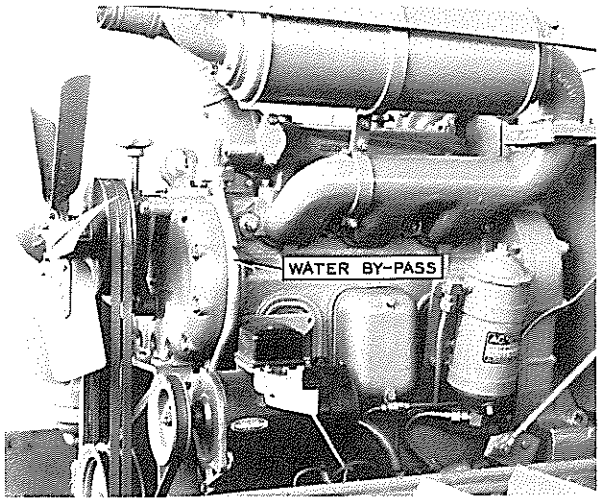

FIG. 5

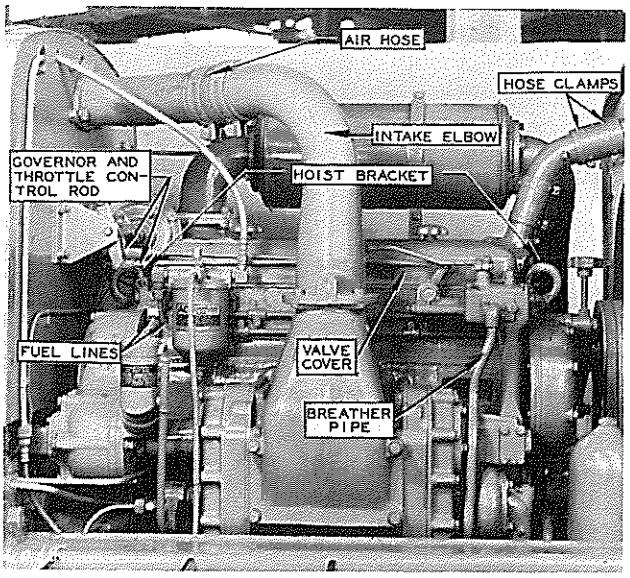

FIG. 6

10. Remove 4 capscrews from governor control housing cover, and remove cover and gasket.
11. Detach governor control rack link from governor and control rack shaft; remove link.
12. Remove 2 capscrews which attach governor control housing to cylinder head.

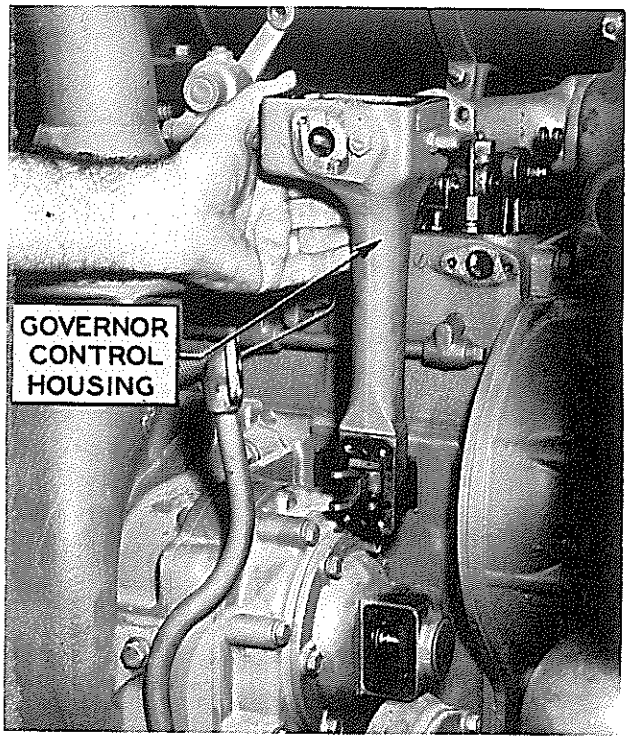

FIG. 7

13. Remove 2 pins in throttle control and shut off lever. Remove governor control housing assembly.
14. Loosen fuel line connections at return fuel manifold on the cylinder head.
15. Disconnect fuel line from pump to filter at filter—remove filter bowl and take out two capscrews holding filter bracket to head.
16. Remove the front injector control tube bracket and remove the control rack.
17. Remove all injector fuel lines. Injector fuel opening should be protected with shipping caps after disconnecting the fuel lines.
18. Remove 2 capscrews at each end of cylinder head that secure cylinder head lifting brackets to the flywheel housing and balance weight covers.
19. Loosen hose clamps on hose connecting air intake pipe and intake elbow.
20. Remove intake elbow by taking out 4 capscrews, which hold it to blower housing.
21. Remove pins from rear ends of governor and throttle control rods.
22. Remove the nuts from the cylinder head studs and, by means of the lifting brackets remove the cylinder head.

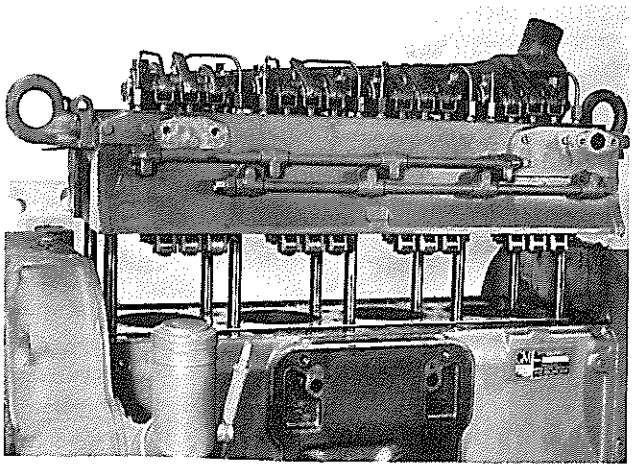

FIG. 8

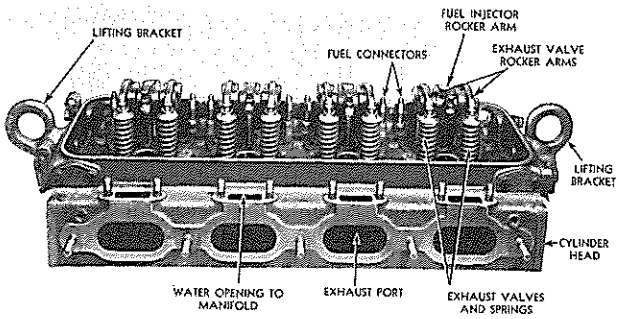

FIG. 9

B. INSTALLING CYLINDER HEAD

Before replacing cylinder head, clean tops of pistons and inspect the cylinder head gasket. If the gasket is damaged install a new gasket.

1. Remove the old cork oil seal gasket from the top of the cylinder block, clean the surface well and install a new gasket;

use shellac on both sides of gasket.

2. Wipe upper surface of cylinder block clean and install cylinder head gasket. The gasket surface next to cylinder head is marked "Top;" also the bead around openings for combustion chambers is toward the cylinder head.
3. Wipe under side of cylinder head clean, and by means of the lifting brackets, set cylinder head in place on block.
4. Loosen capscrews that attach lifting brackets to cylinder head so brackets can shift; starting from the center of the cylinder head and working toward each end, tighten all cylinder head stud nut as tight as possible with an 18" wrench. If torque wrench is used see Topic 68.
5. Replace and tighten the 2 capscrews at each end of cylinder head and attach lifting brackets to flywheel housing and balance weight cover. Tighten the 2 screws that attach lifting brackets to cylinder head. Be sure gaskets are in place.
6. From this point on, reverse dismantling procedure. See instructions, Topics 42 and 43, for injector timing and balancing; also Topic 44 for valve lash instructions.

NOTE: Before replacing valve cover, start the motor and run motor at half speed. Inspect all fuel connections for leaks.

Be sure that valve cover makes air tight joint at cylinder head and is tightened down evenly.

C. CYLINDER HEAD REPAIRS

1. Dismantle engine as outlined in Topic 78A.
2. Remove the two cap screws holding the rocker arm brackets to the cylinder head and remove the brackets from the shaft. Slide the shaft from the rocker arms, and fold the arms back.

   CAUTION: When removing the rocker arm shaft, fold back the three rocker arms and shaft just far enough so shaft can be pulled endwise. DO NOT FORCE THE ROCKER ARMS BACK WITH SHAFT IN PLACE AND IMPOSE A LOAD ON THE ROCKER ARM PUSH ROD.
3. Remove Injectors:

   NOTE: Removal of injectors is unnecessary unless work is to be done on the cylinder head. IF INJECTORS ARE REMOVED, PROTECT THE SPRAY TIPS FROM DAMAGE. Remove injectors as follows:

   a. Remove the injector hold-down nut and clamp.
   b. Using special tool, pry the injectors straight up and remove. After removing the injectors, wash the outside exposed portion in clean fuel and blow off with compressed air.

      If injectors are to be left out of the engine any length of time, they should be filled with a 50-50 mixture of mineral seal oil and kerosene and packed in the air tight containers the new ones came in. Test pop each injector as described in Topic 77E before installing the injector in the engine.
4. Remove nuts from cylinder head studs and by means of lifter brackets remove the cylinder head.

D. REMOVAL OF EXHAUST VALVES

1. Place the clyinder head on the work

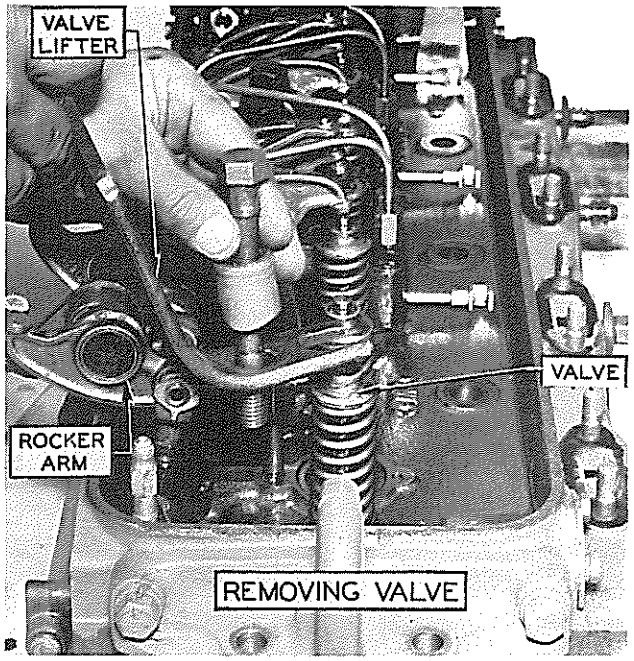

FIG. 10

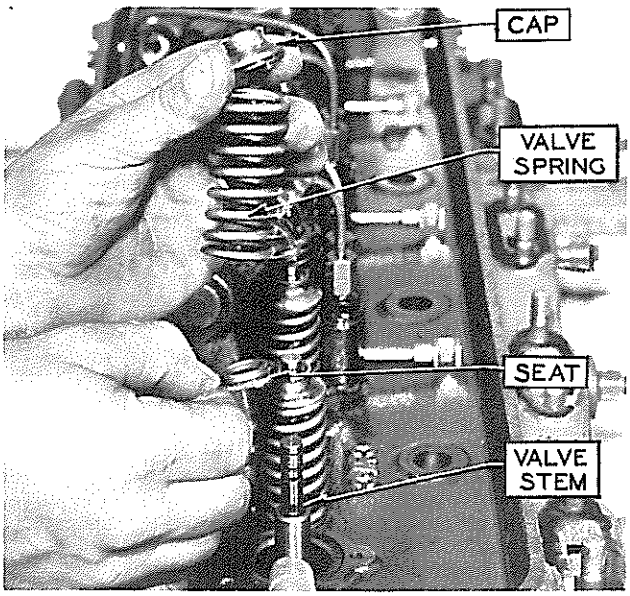

FIG. 11

bench right side up, with the valve heads resting on a 2″ thick block of wood, and release the valve spring by removing the tapered seat lock with special tool shown in Fig. 10. The 2″ thick block is used to protect the valve followers which project through the lower side of the cylinder head.

2. Turn the cylinder head over and withdraw the valves from the bottom.

E. NEW EXHAUST VALVE SPRING, SPRING SEAT, AND SPRING CAP

Effective with Engine Serial Nos. 3714457, 4716024, and 6712481, the subject new parts which formerly were used only on high and medium high output engines were incorporated in all other 3, 4, 6-71 engines, replacing the parts formerly specified.

1. The new exhaust valve parts, as they apply to the 3, 4, 6-71 engines, provide an anti-spin feature which prevents the valve from turning or spinning when engine is operated at higher speeds.
2. In line with the valve spring and parts change on the 3, 4, 6-71 engines, the cylinder heads for these engines have been revised to add ⅛″ drilled holes as required for seating the pin which is part of the new valve seat assembly. See sketch, Fig. 12, showing section of cylinder heads where the ⅛″ drilled holes were added.
3. The new valve spring is identical with former spring except that it has the tapered ends cut back from end coils to give a $\frac{1}{16}$″ step for locking in the new cap and new seat assembly. The new seat assembly provides for a locking pin which fits into the hole drilled in the cylinder head as mentioned in preceding paragraph. See Fig. 12 for details of old and new valve parts.

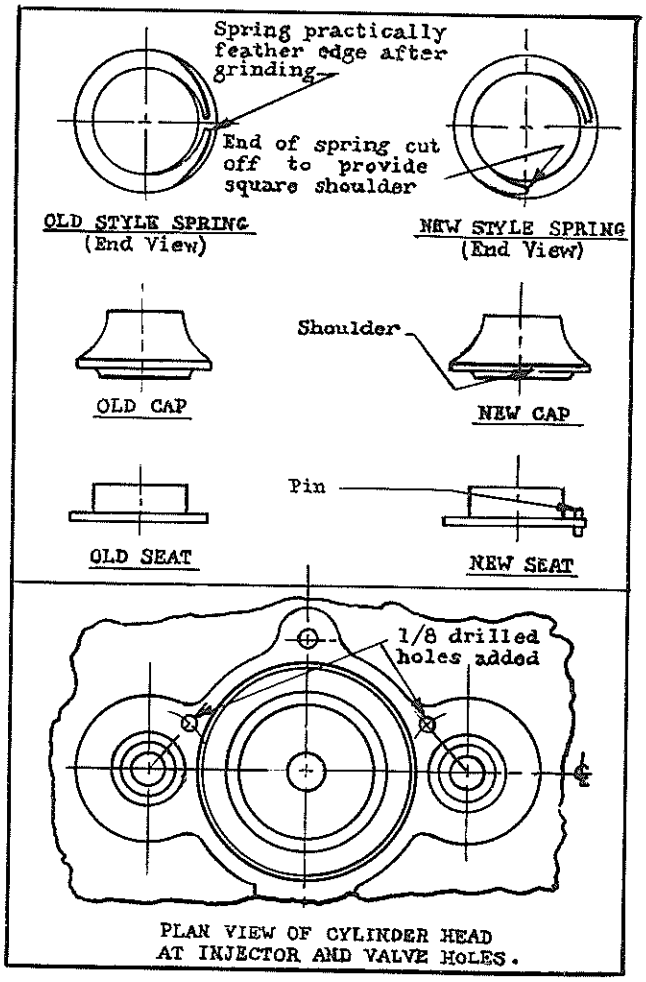

FIG. 12

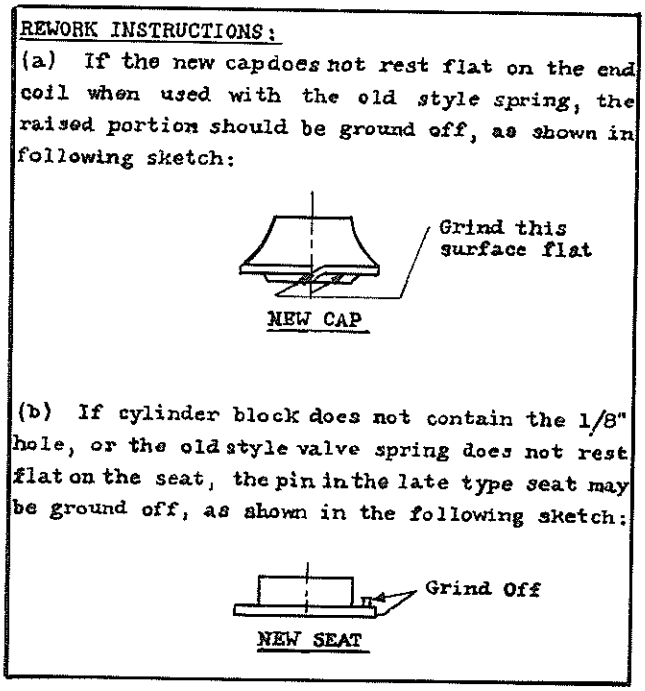

FIG. 13

4. INTERCHANGEABILITY
   a. Valve Spring. The new spring may be used with either old or new correlated parts.
   b. New Valve Spring Cap. The new cap may be used on engines with old style spring. However, care should be taken that the cap rests flat on the end coil of spring. If a rocking condition exists follow rework instructions shown in Fig. 13.
   c. New Valve Spring Seat. The new seat is only released for the 3, 4, 6-71 engines and can only be used on those engines with cylinder heads that include the ⅛″ drilled hole for seating the pin, unless the pin on the new seat is ground off, as shown in rework instructions, Fig. 13.
5. PARTS NOTE:

Both old and new valve spring seats will be available for service, and replacement orders should specify the old or new part numbers

indicated in parts list below. However, in the case of valve spring and cap, only new numbers will be available for service replacement. Parts books should be marked for reference purposes.

6. IDENTIFICATION:

The new spring may be identified by the square cutoff at the end coils. The new seat has a pin and the cap has a step added to prevent spring from turning.

PARTS LIST

Old Part No.	New Part No.	Part Name
5150289	5155209	Valve Spring
5150291	5155210	Valve Spring Cap
5150292	Same	Valve Spring Seat
	5155207	Valve Spring Seat

F. REMOVE AND INSTALL VALVE GUIDES

The valve stem diameter is from .3425" to .3414" and the clearance of the stem in the guide should be from .001" to .002". If this clearance is greater than .005" the guide should be replaced.

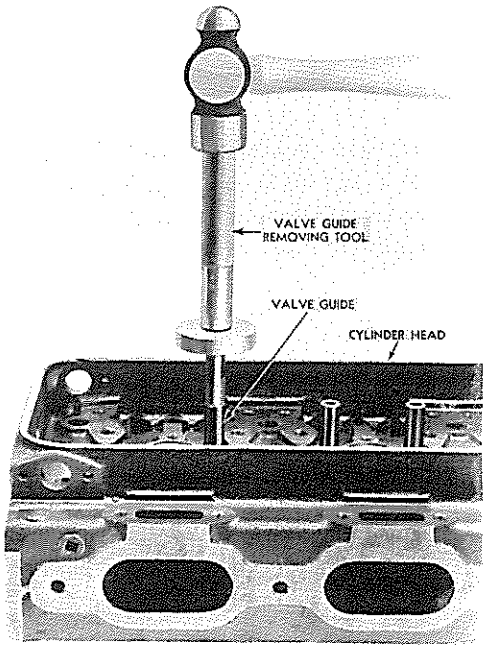

FIG. 14

1. Drive valve guide out from top with special driver shown in Fig. 14.
2. To install valve guide, drive in from bottom of cylinder head with driver and then ream with special reamers shown in Fig. 15.

G. REMOVE AND REPLACE VALVE SEAT INSERTS

1. With cylinder head removed, wash in clean fuel oil and dry with compressed air.
2. Lay cylinder head on bench and insert the collet inside of the valve; insert so

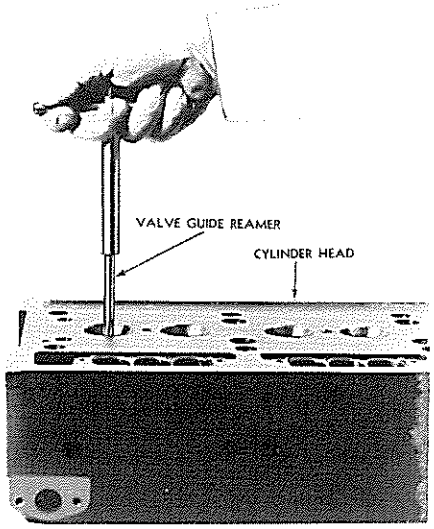

FIG. 15

that lip at bottom of collet flange is flush with bottom side of valve insert. While holding collet in this position, expand same by turning nut at top of tool. Be sure that flange of collet is firmly entered just below valve insert.

3. Slide tool body over top of collet with Allen screw of body in line with slot below threads on collet. Turn Allen screw IN to engage slot and lock screw on collet relative to body.
4. Put thrust bearing over top of collet and on top of body.
5. Start screw thread of tool head onto collet and continue to turn until valve insert is pulled from cylinder head.

   NOTE: Particular care must be exercised when replacing valve seat inserts. The inserts are installed into the cylinder head with drive-shrink fit, and must

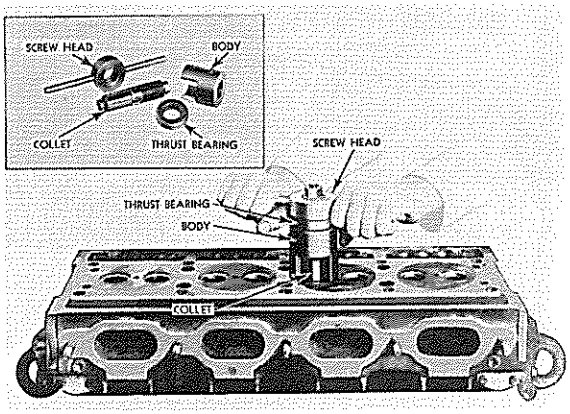

FIG. 16

be started in place true with counterbore in head.

6. See that cylinder head is perfectly clean, particularly the counterbore for inserts.
7. Immerse cylinder head for 30 minutes in water at temperature of 180 to 200 degrees F.
8. Cool inserts on dry ice for 45 minutes.
9. Place cylinder head bottom-side-up on bench, blow out counterbore for inserts with air, and lay one insert at each insert counterbore—valve side up.

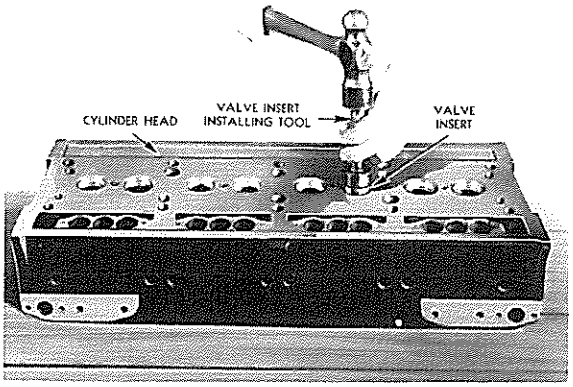

FIG. 17

10. Using special locating and driving tool, shown in Fig. 17, insert pilot end of driver into valve guide and drive insert down tight into counterbore.
    This operation must be done quickly, while the valve seat inserts are cold.
11. Inspect valve seat for concentricity with valve guide and, if necessary, recondition seats as directed.

H. RECONDITIONING VALVES AND VALVE SEATS

Before either a new or used valve is installed, the seat in the cylinder head for the valve should be examined for proper valve seating. Furthermore, if valve once used is to be installed again, the valve stem should be cleaned, and the seat reground to the recommended angle of 45 degrees. The valve guide should be thoroughly cleaned with reamer recommended in conjunction with other Diesel Engine tools. If bore in valve guide is worn oblong, or if valve heads are warped relative to the stem, new parts should be installed. The width of the valve seats in the cylinder head is 5/64". When new valve inserts are installed, or old inserts refaced, the work must be done with a grinding wheel. The ordinary method of reaming valve seats is ineffective for this operation because of the very hard valve insert material.

The complete equipment for valve seat grinding should include:

1. Eccentric valve seat grinder.
2. Dial gauge.

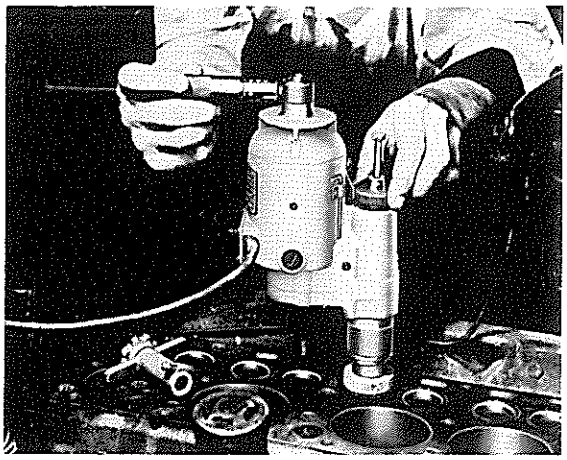

FIG. 18

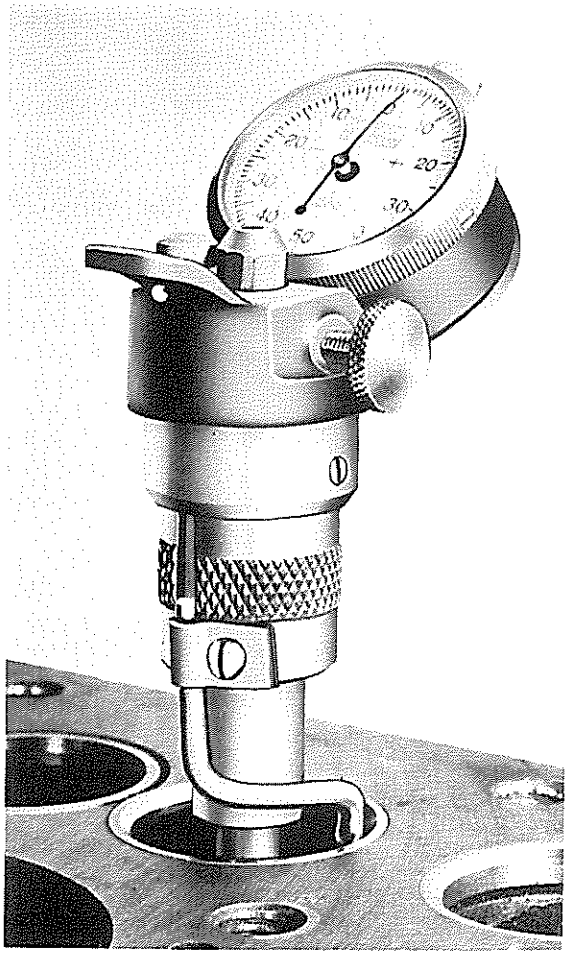

FIG. 19

3. Pilot.
4. 45 deg. grinding wheel.
5. 70 deg. grinding wheel.

The 45 deg. grinding wheel is used for refacing the valve seats, and the 70 deg. wheel is used for narrowing the seats to the standard 5/64" width. After the valve seats have been dressed with the grinding wheel, the dial gauge, shown in Fig. 19, is used to

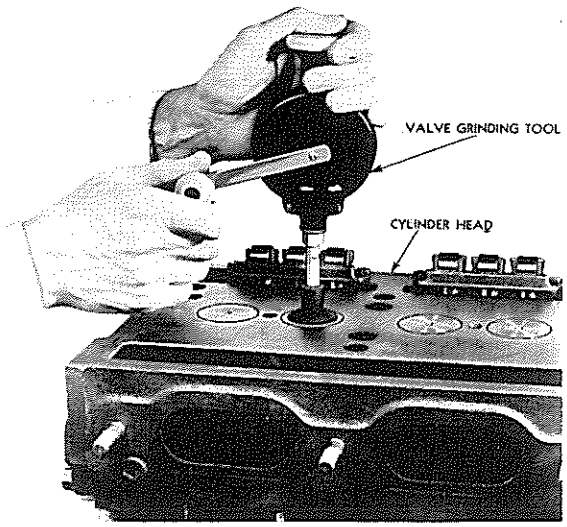

FIG. 20

check the concentricity of the valve seats relative to the valve guides.

After the valve seats have been ground with tool shown in Fig. 18, the valves should be put in place and lapped to perfect seats in the regular manner, as shown in Fig. 20. After lapping, contact between valves and seats may be checked by wiping a thin film of Prussian blue on the valve seats, setting valves in place, and bouncing valve on seat.

I. REMOVAL OF CAM FOLLOWERS AND PUSH RODS

The cam followers may be removed from either the top or bottom of the cylinder head. When they are removed from the bottom, the cylinder head must first be removed from the motor, and when they are removed from the top, the cylinder head need not be removed. If, for any reason, the cylinder head is off the engine, the cam followers can best be removed from the bottom of the head as shown in Fig. 21.

1. TO REMOVE THE CAM FOLLOWERS AND PUSH RODS FROM THE LOWER SIDE OF THE CYLINDER HEAD:
   a. Cylinder head removed.
   b. Remove the rocker arms by loosening lock nuts and unscrewing from push rods.
   c. Lay the cylinder head edgewise on the bench, as shown in Fig. 21, and remove the 2 screws "A" that attach the cam follower guides to cylinder head and remove guides.
   d. Pull the cam followers, retainer springs, spring retainers and push rods as an assembly from lower side of cylinder head.

The valve follower retainer spring lock wires, shown in Fig. 22, still remain in the cylinder head. If the head is to be changed, these springs must be removed; if not, they may be left in place.

It may be desirable, at times, to change a push rod without removing the cylinder head.

2. TO REMOVE CAM FOLLOWERS AND PUSH RODS FROM UPPER SIDE OF CYLINDER HEAD:

To use the tool illustrated in Fig. 22 re-

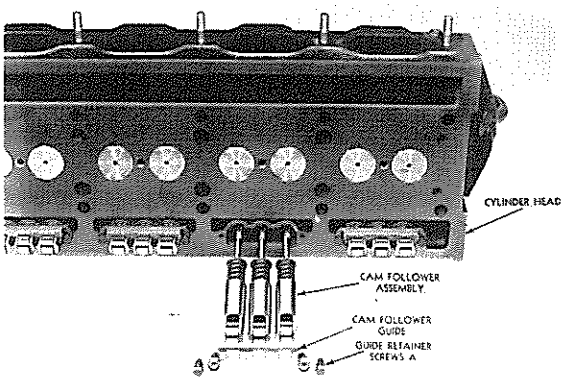

FIG. 21

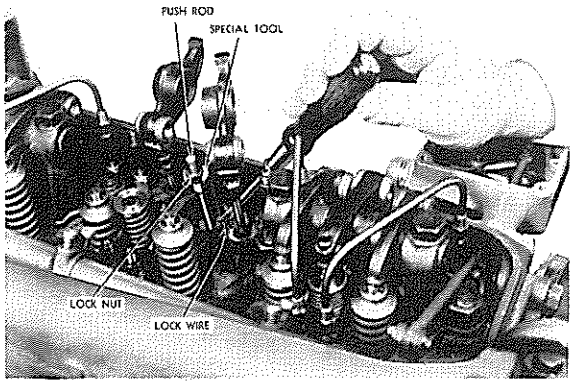

FIG. 22

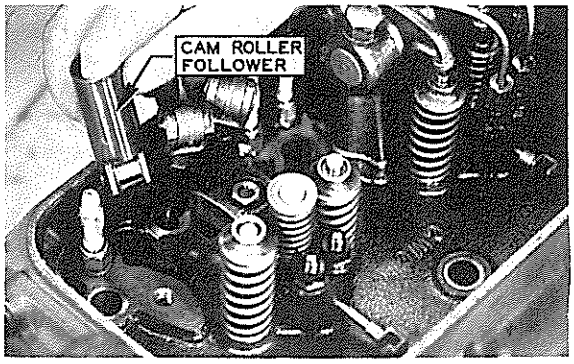

FIG. 23

move the rocker arm, insert the special tool between the upper surface of the cam follower retainer spring and the lock nut on the push rod, then screw the nut down to compress the spring. With the spring compressed, use a screw driver and dislodge the lock wire from the groove in the cylinder head. With lock wire dislodged, the push rod may be removed. Cam follower may now be pulled out of cylinder head.

J. INSPECTION OF CAM FOLLOWER ASSEMBLY

After the cam followers have been removed they should be cleaned in fuel oil, blown off

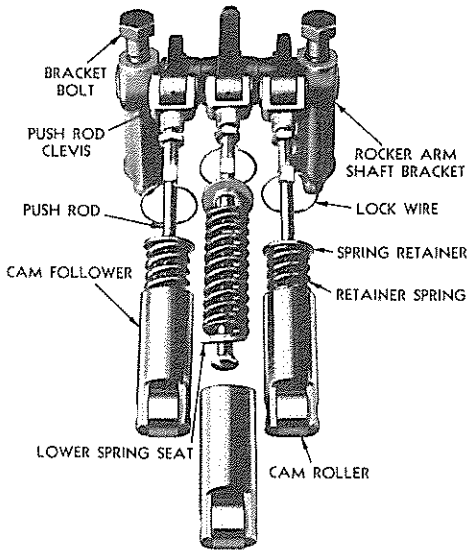

FIG. 24

with dry compressed air, and inspected before being assembled into the cylinder head. The cam rollers must rotate smoothly and freely on their bearings. If cam rollers, bearings, or pins are worn sufficiently to allow more than .005" radial movement of roller, or if pins are loose in the cam followers, the follower assemblies should be renewed. Rollers must be free from flat spots or scuff marks. If these exist, or if rollers have not been rotating freely, examine the cams on which rollers have operated; if scuffed or noses of cams are worn down, install a new camshaft.

Rapid change in valve lash, if such condition has existed, may be due to cam follower assemblies because of the above reasons.

K. REPLACING CAM FOLLOWERS

1. To assemble cam followers and push rod assemblies from the bottom of the cylinder head.
   a. See that the spring seats, push rods, and retainer springs are set down into the hollow followers as shown in Fig. 24. Then with the lock wires in place in the cylinder head, slide the follower assemblies into the cylinder head. When installing the followers, see that the oil holes in the lower end of the followers point away from the valves, so that the holes are not covered with the follower guides.
   b. Attach the follower guide retainers to the cylinder head, to hold the followers in place.
   c. Provide a 2" thick strip of wood on which to rest cylinder head and protect valve followers, then invert the head and run the lock nuts down onto upper end of push rods.
   d. Note that the injector rocker arm—the center arm—is different from the exhaust valve rocker arms; also that the boss for the shaft on the valve rocker arm is longer on one side than on the other. The long side of the boss must face the injector rocker arm.

   With the rocker arms selected as above, screw the upper end of each push rod into the rocker arm clevis so the end of the rod is just flush with the top of the threaded portion of the clevis. Do not tighten the lock nuts yet.

CAUTION: Whenever a push rod has been disconnected from the push rod clevis, the rod must be screwed back into the clevis flush with the top of the threaded portion of the clevis before the valve lash is checked. If this is not done, the piston may hit the head of the valve when the engine is being turned, owing to the small clearance between the valves and piston head at the piston's upper position.

2. To replace cam followers and push rod assemblies from the top of the cylinder head.
   a. Replace the cam follower. Point the oil holes in the lower end of the followers away from the valves so that the holes will not be covered by the follower guides.
   b. Install the push rod assembly.
   c. Install the lock wires in place.

L. REMOVAL OF INJECTOR COPPER TUBING

1. Turn the cylinder head bottom side up and drive the copper tube from position by shearing the flange at the bottom of the tube with the special tool as shown in Fig. 25.

M. INSTALLING INJECTOR COPPER TUBE

1. The copper tube is installed in the cylinder head by inserting a rubber ring into counter-bore of cylinder head at open-

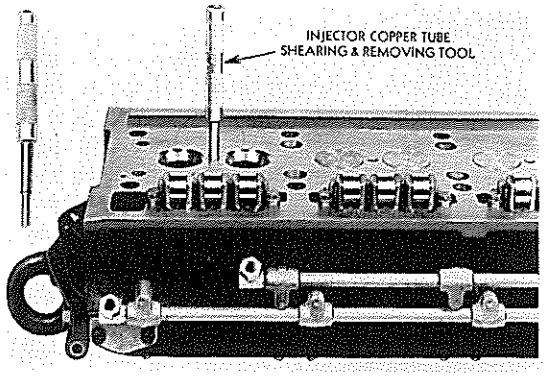

FIG. 25

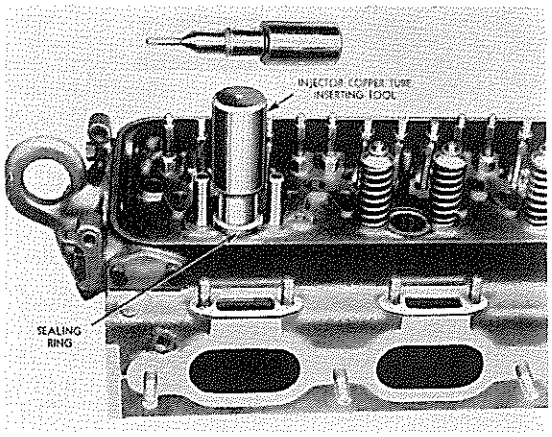

FIG. 26

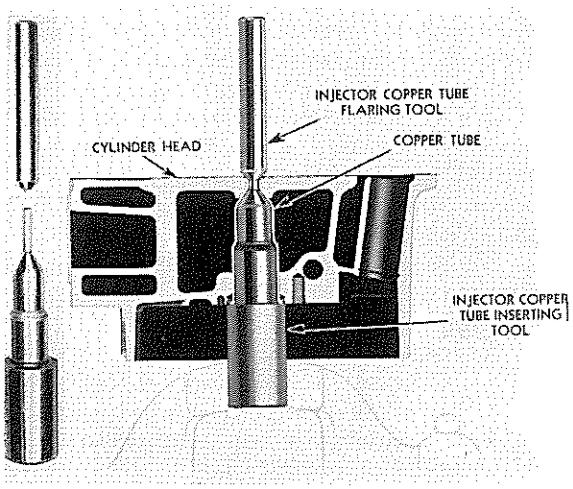

FIG. 27

ing for injector tube and crowding tube through ring and into position in cylinder head. The flange at upper end of tube will seat on rubber ring and into counter-bore when copper tube is in position.

2. Drive tube into position with special tools as shown in Fig. 26, taking great care that the small end of copper tube enters the hole without striking the edge. If this happens the copper tube will be damaged.

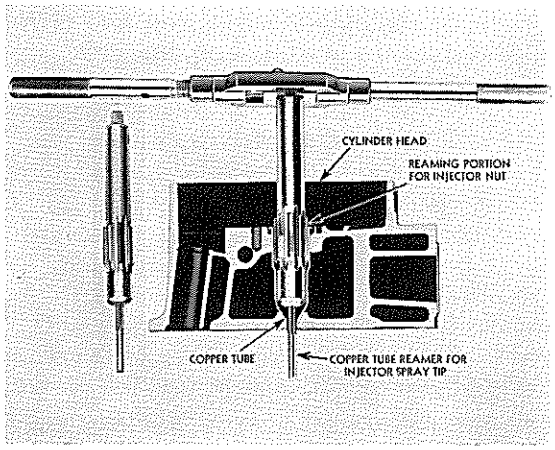

FIG. 28

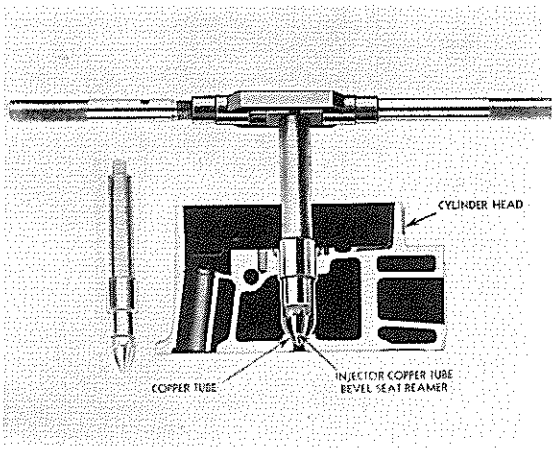

FIG. 29

3. After driving tube into position, support driving tool in vise, point up and inside of tube. Slide flaring tool down over small end of driver tool and peen lower end of tube into flare of cylinder head by rotating the flaring tool. See Fig. 27.
4. After copper tube has been installed in the cylinder head, it must be reamed first to receive the injector spray tip; and second, for good seating of bevel on lower end of injector nut. The reaming for the injector and spray tip is done by a special tool as shown in Figs. 28 and 29.

   NOTE: When using injector hole tube reamers use a mixture of one-half cutting oil and one-half kerosene. This will produce a smooth finish and preserve cutting edges of reamers. Time can be saved when reaming injector hole tube bevel seat by use of the injector feed clamp Fig. 31. Besides cutting reaming time in half, use of feed clamp also produces a smoother seat. Feed clamp can

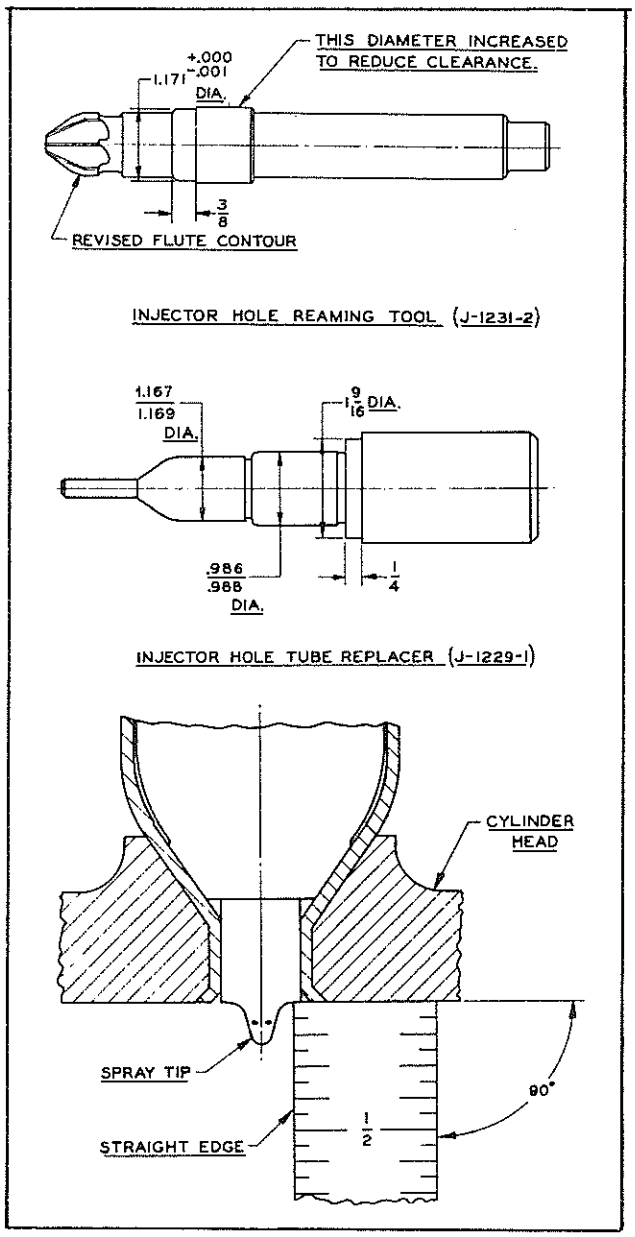

FIG. 30

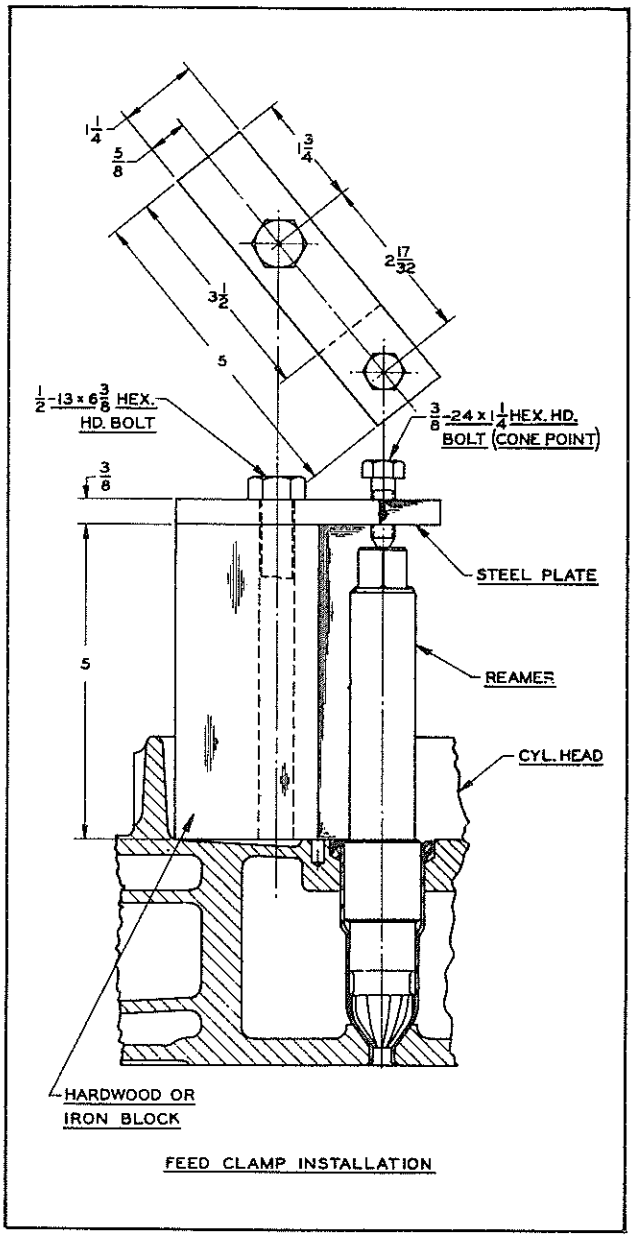

FIG. 31

be made up as shown, or purchased.

CAUTION: Injector tube bevel seat should be reamed so that shoulder on spray tip is just flush with face of cylinder head, Fig. 30. This relation should be checked with a straight edge as it is important to hold the tip in this position. Check depth with an injector during reaming operation.

5. In order to withstand the high compression pressure, the beveled seat at lower end of injector nut must fit true in the copper tube.
6. After the reaming operations, daub a thin film of Prussian blue at lower end of injector nut and insert injector down in the tube and lock in position with injector clamp.
7. Remove the injector and see if the injector has a good bearing at the bevel seat; if bearing is poor at this point, chances are the tube has been improperly installed in which case install another tube and again proceed with reaming operations as outlined above.

N. REMOVAL OF FUEL OIL MANIFOLD

1. Remove valve cover.
2. Remove fuel oil lines from injector to fuel connectors. Place shipping caps over openings in injector to keep dirt from getting in the injector.
3. Remove fuel connectors and fuel manifolds.

NOTE: The connectors must be removed before the manifold can be removed. The T connectors on the manifold leading into

the cylinder head are on the top side of the lower manifold and on the bottom side of the upper manifold.

O. INSTALLING FUEL OIL MANIFOLD

1. After the manifolds have been set in position, replace the fuel oil connectors.
2. Connect fuel oil lines to manifold.
3. Attach fuel oil line at injectors and fuel connectors.

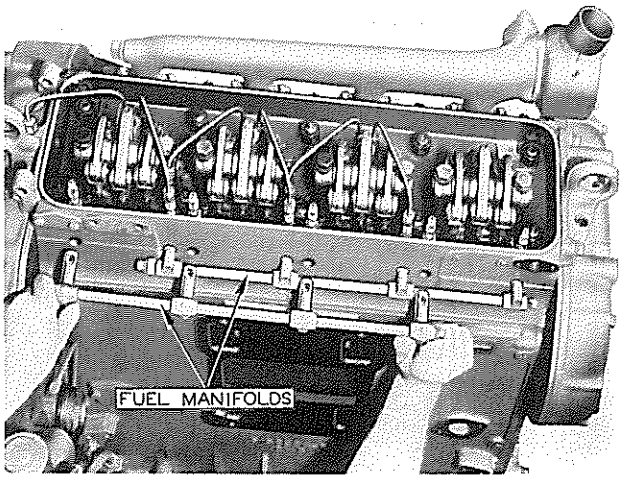

FIG. 32

79 -- Blower

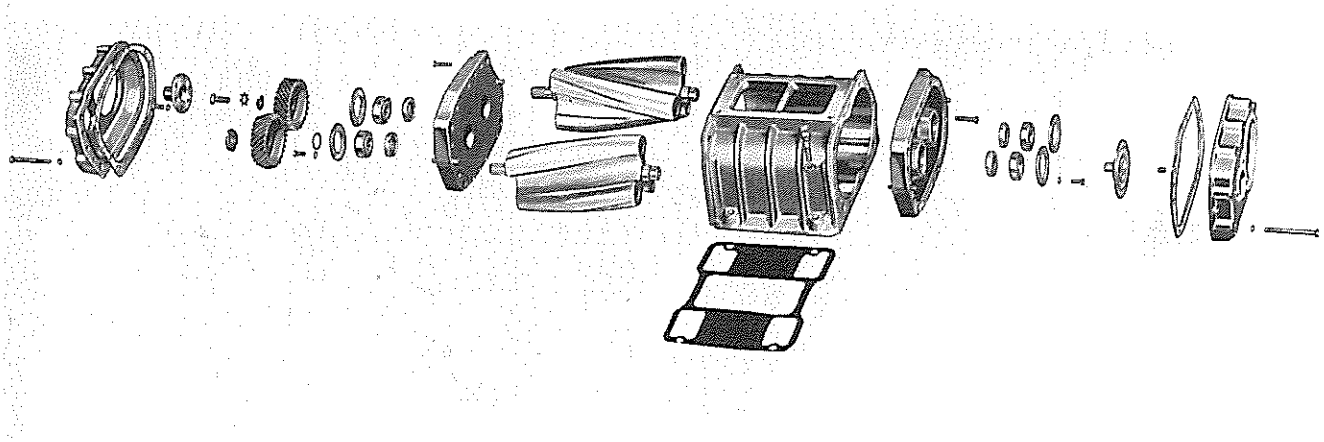

EXPLODED VIEW OF BLOWER ASSEMBLY

FIG. 1

In the scavenging process employed in these two-cycle engines, a charge of air, which is forced into the cylinders by the blower, thoroughly sweeps out all of the burnt gases through the exhaust valve ports and also helps to cool the internal engine parts, particularly the exhaust valves. At the beginning of the compression stroke, each cylinder is filled with fresh, clean air, which permits highly efficient combustion.

DESCRIPTION—The blower, designed especially for efficient Diesel operation, supplies the fresh air needed for combustion and scavenging. Its operation is similar to that of a gear-type oil pump. Two hollow rotors, each with three lobes, revolve with very close clearances in a housing bolted to the side of the engine. To provide continuous and uniform displacement of air, the rotor lobes are made with a twisted or helical form.

The air entering the blower inlet from the air cleaner is picked up by the lobes and carried to the discharge side of the blower as indicated by the arrows. The continuous discharge of fresh air from the blower creates an air pressure of about seven pounds per square inch in the air chamber of the cylinder block at maximum engine speed. This air swirls through the intake ports, which start to open at 48° before bottom dead center and close at 48° after bottom dead center.

The angle of the ports in the cylinder liners imparts a rotational motion to the intake air as it enters the cylinder. This rotation persists throughout the compression stroke and improves the combustion.

Two timing gears on the drive end of the rotor shafts space the rotor lobes with a slight clearance. Consequently, due to the fact that the rotors do not touch each other at any time, they require no lubrication. Highly effective seals prevent air leakage at the ends of the lobes, and also keep the oil used for lubricating the timing gears and rotor shaft bearings from entering the rotor compartment. The upper rotor is driven 1.95 times engine speed by the

blower driveshaft and the lower rotor is driven from the upper rotor through the timing gears. The flexible coupling attached to the blower drive gear, which prevents the transmission of torque fluctuations to the blower, is formed by an elliptical cam driven by two bundles of leaf springs which ride on four semi-cylinderical supports. Each rotor is supported on the doweled end plates of the blower housing by a single-row radial ball bearing at the front, and a two-row pre-loaded radial and thrust ball bearing at the gear end.

A. REMOVAL OF BLOWER

1. Disconnect the governor control housing assembly from the blower and the block. Remove this housing.
2. Remove the flywheel housing star cover and remove the blower drive shaft.
3. Disconnect the fuel lines from the fuel pump.
4. Disconnect the water pump at the oil cooler and cylinder block.
5. Remove the air intake elbow and air inlet housing.

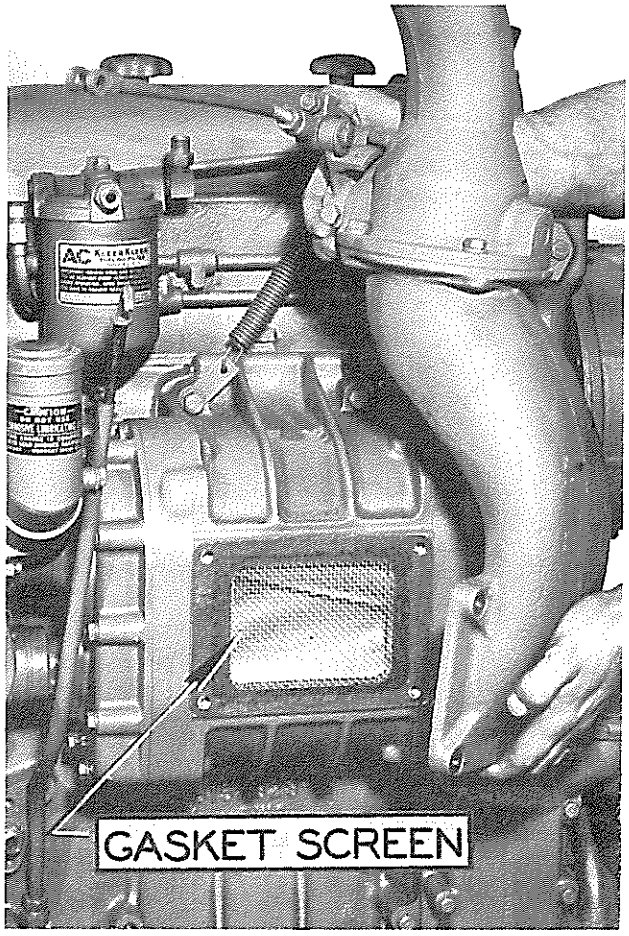

FIG. 2

6. Remove the capscrews at the top and bottom of the blower that holds it to the cylinder block.
7. Raise the front end of blower slightly to clear water pump to oil cooler connection, and pull blower assembly (including accessories) forward, withdrawing blower drive shaft cover from grommet on drive gear housing.
8. Remove the fuel oil pump, water pump, blower drive shaft covers, and governor weight housing from the blower.

B. DISASSEMBLY

1. Remove 10 capscrews in each end cover and pull cover off dowels at top and bottom of bolt flange. Do not pry between cover and end plate or gasket surfaces will be damaged.

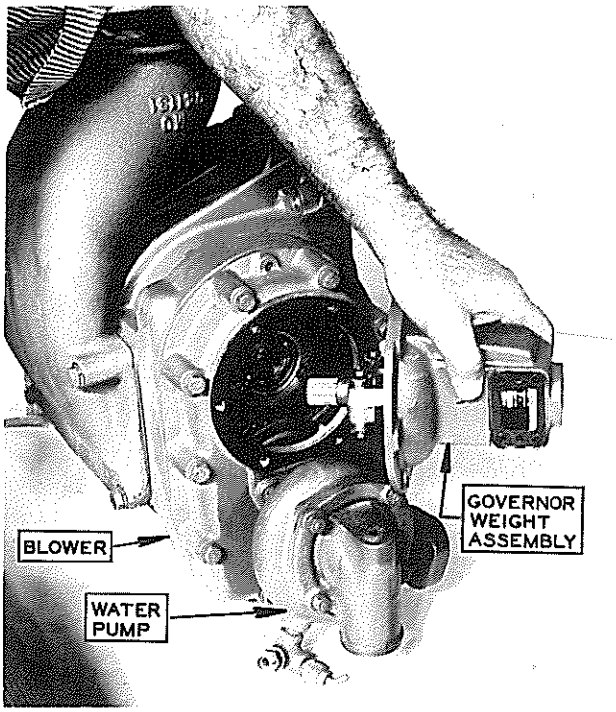

FIG. 3

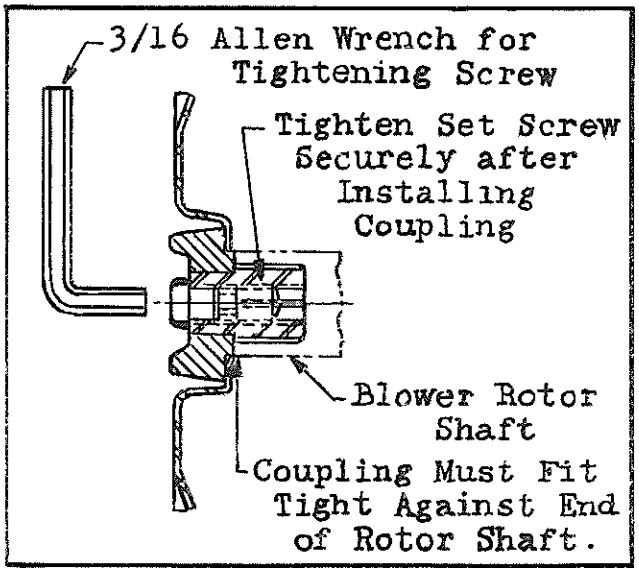

FIG. 4

2. Using a $\frac{3}{16}''$ Allen wrench, loosen expander screw at center and front end of

blower lower rotor shaft, and withdraw water pump intermediate coupling from shaft.

3. Remove 6 capscrews attaching blower drive shaft flange to rear face of blower upper rotor timing gear, and tap flange free of gear.
4. Remove the capscrews and washers at center of rear end timing gears that lock the gears in place.
5. The two timing gears must be pulled from the rotor shafts at the same time.

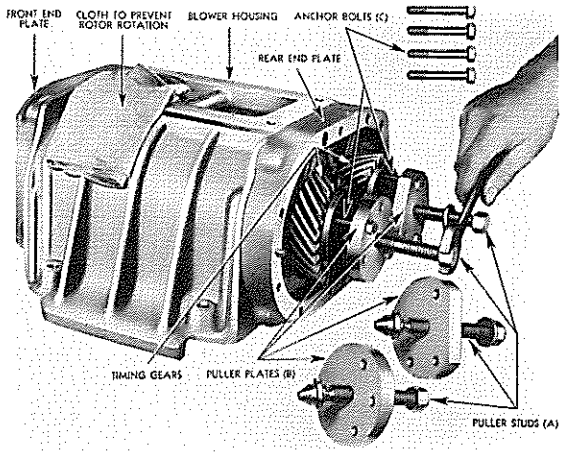

FIG. 5

a. Back out puller studs (A) in puller plates (B) as far as possible.
b. Install two anchor bolts (C) in diametrically opposite holes of puller plates and screw anchor bolts into gears as far as possible so faces of plates are parallel with face of blower.
c. Turn the two puller studs (A) UNIFORMLY clockwise and withdraw gears from rotor shafts.
Note number and thickness of shims on each rotor shaft, if any are used, remove from shafts and replace accordingly when assembling blower.

6. Back out 3 capscrews at each bearing and remove rotor shaft bearing retainers at both ends of blower.
7. Remove rotor shafts from rear bearings and front end plate from blower housing. This procedure applies to blowers on which the rotors and housing have not been scored to the extent that withdrawal of rotors assembled to the front end plate will not further damage rotors. If rotors and blower housing are badly scored, rotor shafts should be pushed from bearings in front end plate before withdrawal, as outlined in item (8).
   a. Remove two countersunk fillister head screws from end plate, and loosen about three turns the two countersunk fillister head screws in REAR end plate.

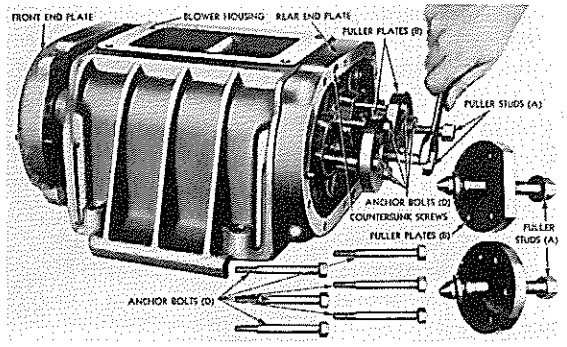

FIG. 6

   b. Back out puller studs (A) in puller plate (B) as far as possible.
   c. Install the 3 anchor bolts (C) in the three equally spaced holes of each puller plate and screw anchor bolts in holes from which bearing retainer screws were removed so faces of plates are parallel with face of blower.
   d. Turn the two puller studs (A) uniformly clockwise and push rotor shafts from bearings in REAR plate. FRONT plate, with rotor shafts still assembled in bearings, will be pushed away from blower housing, simultaneously.
   e. Remove tool from rear end plate and the two fillister head retaining screws, then pull plate from position by hand. Withdraw rotors and front end plate assembly from blower housing, IF ROTORS ARE NOT SCORED. If rotors are scored, remove front end plate from rotor bearings before withdrawing rotors; as outlined in item (8).
8. Remove rotor shafts from front end plate bearings. The rotor shafts are removed from the FRONT end plate bearings with the same tool and in exactly the same manner as from the REAR plate, as follows:
   a. Attach puller plates (B) to blower front end plate with anchor bolts (C) screwed into holes from which bearing retainer bolts were removed—the same as in 7-C.
   b. Turn the two puller studs (A) uniformly clockwise and push rotor shafts from bearings.
9. Remove rotor shaft bearings from blower end plates. Insert bearing removing tool through oil seal from inner face of blower end plate, as shown in Fig. 7 so pilot of tool enters bore in inner race of bearing and shoulder of tool rests against face of bearing inner race. Support end plate approximately two inches off bench and drive bearing from position. Follow this same method on all

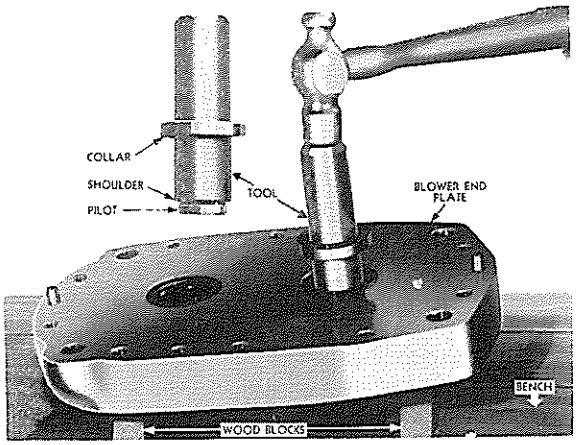

FIG. 7

four bearings.

10. Remove bearing oil seals from blower end plates. Inspection of oil seals for leaks while the blower was running on the engine largely determined if they should be changed. A further inspection may be conducted after blower has been disassembled. If the leather is scored so that a tight seal on shafts is impossible or the leathers have become charred and hard, the seals should be changed. If change is necessary, the seals may be removed from the end plates at the same time the individual bearings are removed. This is done by continuing to drive down on the tool, shown in Fig. 7 until collar on tool rests on and forces seal down and out of plate.

C. INSPECTION

After the blower has been disassembled all parts should be washed thorougly, blown dry with compressed air, and inspected before assembly.

1. Ball bearing inspection
   a. Wash the ball bearings by rotating the bearings by hand in clean kerosene or fuel oil until free from grease and oil.
   b. Clean the balls and races by directing air through the bearing, at the same time rotating the bearing by hand. Do not spin the bearing with air pressure.
   c. If necessary, repeat cleaning operation to be sure all foreign substance is removed.
   d. After cleaning thoroughly, lubricate with clean engine oil and rotate by hand and inspect for rough spots. The bearing should run free and show no indication of roughness. The double-row bearings are pre-loaded and have no end play; in fact, a new double-row bearing will seem to have considerable resistance to motion when revolved by hand.
2. Inspect the oil seals in the end plates and if necessary, install new seals. Oil seals that have been used should be lubricated with clean engine oil at time of assembling blower; new oil seals should be soaked for at least 60 minutes in thin, clean, engine oil before assembling.
3. Inspect blower rotor lobes for smoothness. and shaft serrations and bearing surfaces for wear or burrs.
4. See that end plate finished faces are smooth and flat.
5. See that finished ends of blower housing, which receive the end plates, are flat and free from burrs. The end plates must set flat against the blower housing.
6. Inspect blower gears for wear.
7. Inspect the inside of the housing to see that the surfaces are smooth.

D. ASSEMBLY

1. Install oil seals in blower end plates. The oil seals should be assembled into the end plates with flat face of seals flush with inner finished face of plates and sealing edge of leather pointing toward rotor bearings, as shown in Fig. 9. The seals may be installed properly with the tools shown in Fig. 8.
   a. Support end plate between soft jaws in bench vice. Back out puller stud (A) as far as possible and push stud through bore for bearing in end plate from the outer face (rib side with puller plate 'B') resting against outer face of blower end plate.

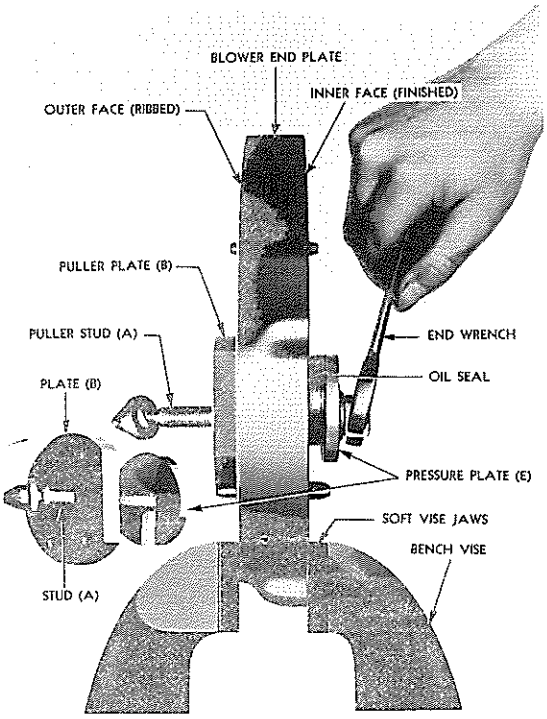

FIG. 8

b. With flat face of oil seal facing head of puller stud. slide seal over head of stud and start into bearing bore by hand.
c. Slip pressure plate (E) over body and next to head of puller stud and turn puller stud (A) clockwise forcing oil seal into seat until pressure plate (E) sets tight against inner face of blower end plate. Remove tool and install remainder of seals in the same manner.

2. Install blower front end plate. The top of the blower may be identified by the flange which carries the entire length of the housing and provides a rest on top of the cylinder block. The end plate is semicircular at the top, as shown in Fig. 10 and is also marked "TOP" on outer, ribbed side.

Even though the blower end plate is interchangeable front and rear, the plate at the front end of the blower should be assembled to the blower housing before the rear plate is assembled.

When viewing blower housing as on engine, the end plate for the front will be assembled to the right-hand end of the housing.

With these identifications clearly in mind, attach end plate to front end blower housing, as follows:

a. Start end plate dowels in dowel holes of blower housing. Rap dowels and end plate lightly with babbitt hammer to fit end plate to housing.
Note that no gaskets are used between end plates and housing, therefore, mating surfaces must be perfectly flat and smooth.
b. Lock end plate securely to housing with two fillister head screws. NO LOCKWASHERS.
c. Inspect and see that dowels project 3/8" beyond outer face of end plate.

3. Before further assembly of the blower, certain inspection operations are necessary to insure the proper relation of parts. The lobes on one of the blower rotors and the teeth on one of the timing gears form a right-hand helix and on the mating parts a left-hand helix.

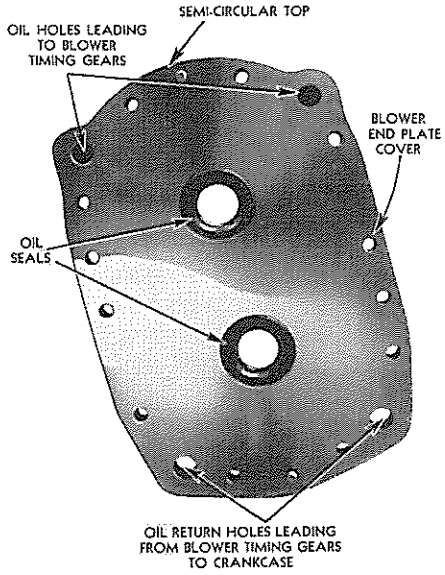

FIG. 9

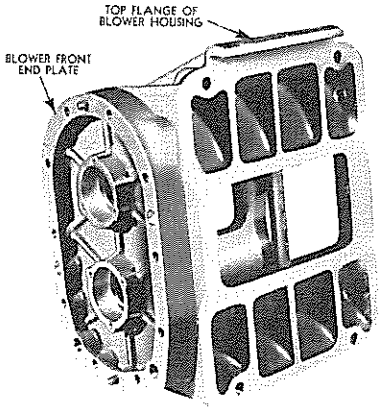

FIG. 10

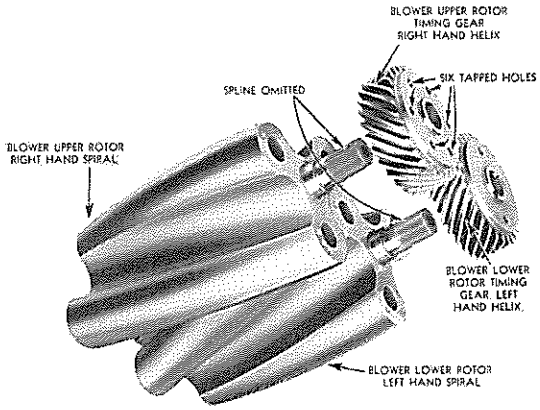

FIG. 11

The rotor with the right-hand helix must be used with gear having right-hand helical teeth and vice-versa. Rotor and gear with RIGHT-HAND helices are the upper units in the blower; and these parts with left-hand helices the lower units. Furthermore, for convenience in blower timing, one serration is omitted on the drive end of each blower shaft with corresponding omissions in the gear hubs. Gears must be placed on

the shafts with the serrations in registration. Rotors must be assembled with the omitted serrations toward top on both rotor shafts.

To avoid confusion when assembling, place the right-hand rotor and right-hand gear together on the bench; likewise the left-hand rotor and gear, as shown in Fig. 11.

NOTE: Effective on motors serial number 371-4353, 471-6022 and 671-11907. Rotors and gears are marked as follows: Upper rotor and upper gear are marked "Upper."

Lower rotor and lower gear are marked "Lower."

4. Assembling rotors into housing. With this in mind, as outlined in item (3).
   a. Install one oil seal pilot (F) over short end (non-splined) of each rotor shaft and with rotors in mesh and omitted serrations toward top of blower housing, slip rotors into housing. (See Fig. 12).
   b. Remove oil seal pilots.

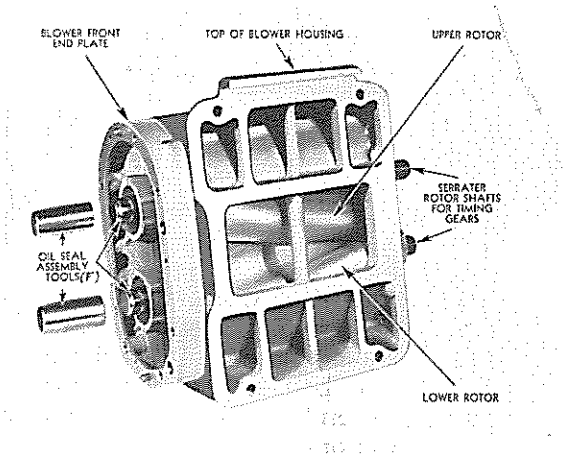

FIG. 12

5. Install blower rear end plate. With rotors positioned in housing as per item (4).
   a. Install one oil seal pilot (F) over serrated end of each rotor shaft.
   b. Identify top and bottom of end plate as described in item (2) and shown in

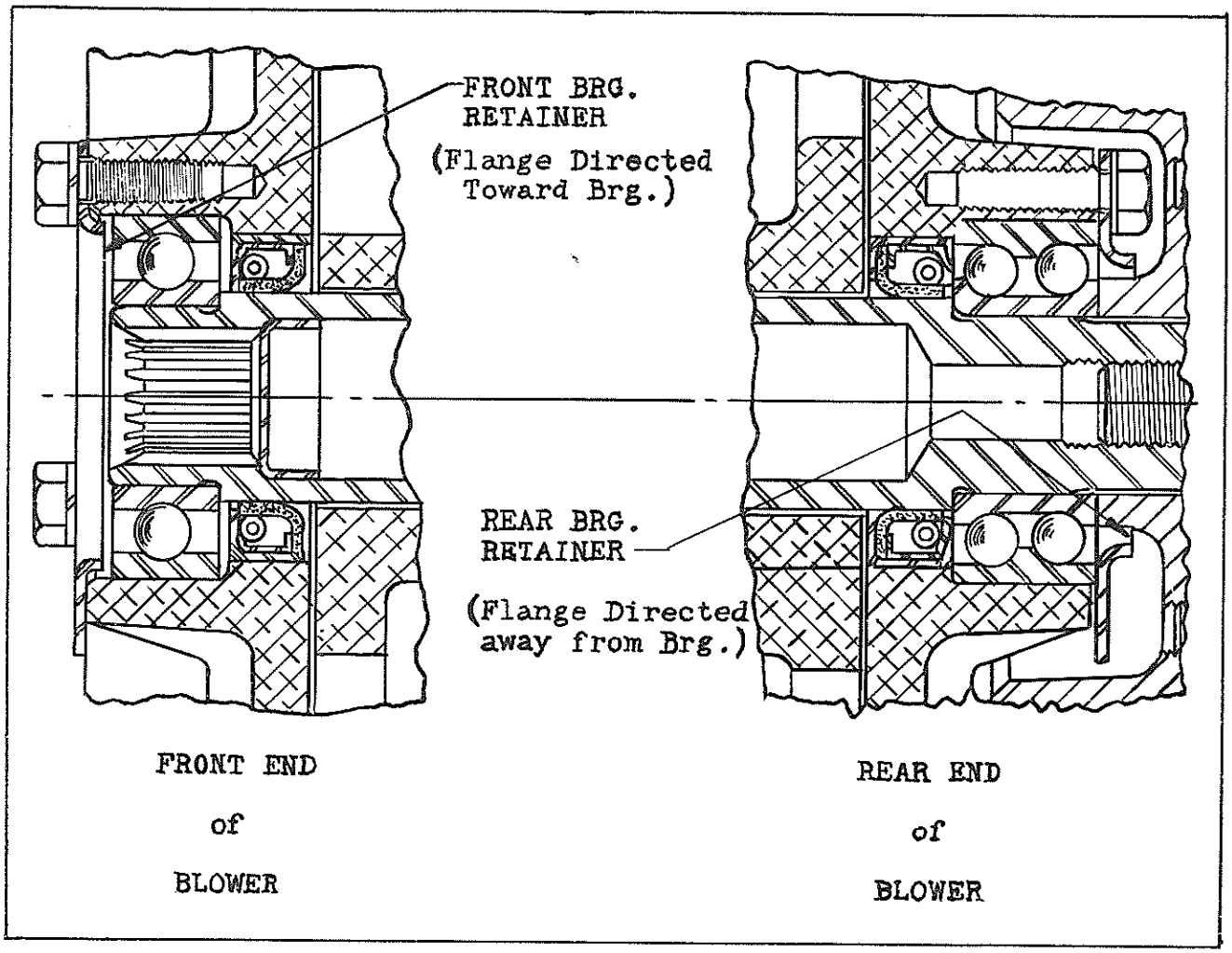

FIG. 13

Fig. 10 and start end plate dowels into dowel holes in blower housing. Tap dowels lightly to fit end plate to housing.

c. Lock end plates securely to housing with two fillister head screws. NO LOCKWASHERS.

d. Inspect and see that dowels project ⅜" beyond outer face of end plate.

e. Remove oil seal pilots.

6. Install rotor shaft front bearings. Single-row ball bearings are used at the front end of the blower rotor shafts and double-row ball bearings at the rear (serrated) end. The bearing number is stamped at one end of the ball race only. When assembled, the markings are toward the outside face of the end plate. With these identifications in mind:

a. Start the single-row bearings onto front end of rotor shafts (short end with internal splines.)

b. Using tool (G) shown in Fig. 14, tap bearings into end plates.

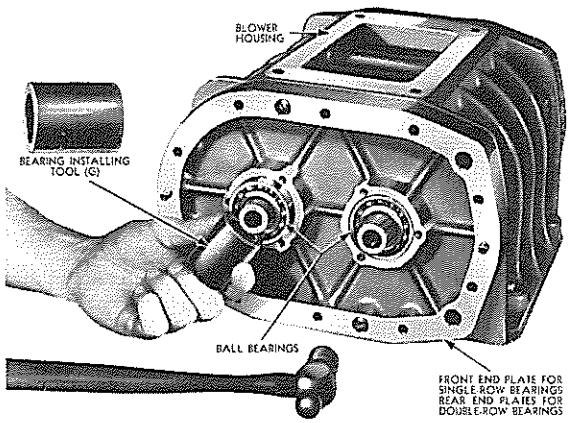

FIG. 14

NOTE: Bearing retainers for single-row bearings have 1 3/16" inside diameter and for double-row bearings 1-9/16" inside diameter.

c. Install front bearing retainers with flange at inner diameter of retainer directed toward bearing. Lock each retainer with three capscrews and lock washers.

7. Install rotor shaft rear bearings. Install the rear rotor shaft bearings exactly the same way the fronts were installed and using the same tool, except, flange at inner diameter of retainer is directed away from bearing. Be sure markings on bearing race are toward blower end plate.

8. Press timing gears onto rotor shafts. If blower once used is being reassembled —shims were no doubt used back of one, or perhaps both blower timing gears— they should be installed in their original positions before pressing gears onto shafts. If new gears and shafts are used, install without shims, and use shims later if necessary when timing rotors.

Being sure that both rotor shafts with the omitted serrations, as shown in Fig. 11 point toward top of blower; that the drive gear (timing gear) with 6 tapped holes in hub, is located on the upper rotor shaft; that original shims are placed on their respective shafts, start both gears onto shafts and gears registering. An "O" mark is indented into end of shaft at omitted serration to assist in locating gears properly.

Apply some engine oil at shaft serrations and proceed to press gears onto shafts with tool, shown in Fig. 15.

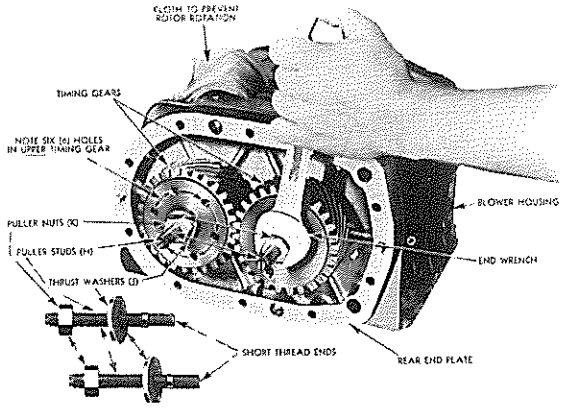

FIG. 15

a. If blower is equipped with ⅜" diameter timing gear retainer bolts, put thrust washers (J) on puller studs (H), insert short threaded end of studs through holes in gear hubs and screws into rotor shafts as far as possible.

b. Turn puller nuts (K) UNIFORMLY clockwise and press gears tight against shoulders or shims on shafts. Caution! Gears must be pressed to position at the same time to avoid damage to gears and rotors. Do not pull gears up tight if rotors are in contact.

c. If blower is equipped with ½" diameter timing gear retainer bolts, use these bolts, together with the small washer at upper shaft and large washer with driving lugs at lower shaft, to press the gears uniformly onto shafts.

d. If ⅜" timing gear retainer bolts are used, lock gears in place with capscrews and lockwashers, noting that small flat washer is located on upper shaft, and large washer, with driving

lugs for fuel pump, is located on lower shaft. See that locking ears on fuel pump coupling engage slots in gear hub.

e. If ½" timing gear retainer bolts are used, install special lockwasher and pierced retainer washer on bolt for upper gear so that retaining washer pierced lugs engage slots in gear hub, and lockwasher ear engages slot in retaining washer.
For lower gear lock, install special lockwasher and fuel pump coupling disc on retainer bolt so lock tangs of disc engage slots in gear hub and lockwasher ear engages slot in coupling disc. Draw retainer bolts reasonably tight, but not enough to bend fuel pump coupling disc.

9. Blower rotor timing. At this stage of the blower assembly, the blower rotors must be "timed."
The three lobes on each blower rotor are located spirally (helical) relative to the center line of the rotor shaft. The teeth on the timing gears are also helical, and as previously stated, the rotor with the right-hand helical lobe is driven with a gear having right-hand helical teeth. The blower rotors, when properly positioned in the housing, run with a slight clearance between the lobes. This clearance may be varied by moving one of the helical gears in or out on the shaft relative to the other gear.
If the upper gear is moved out, the upper rotor will turn counter-clockwise when viewed from the gear end. If the lower gear is moved out, the lower rotor will turn clockwise when viewed from the gear end. This positioning of the gear, to obtain the proper clearance between the rotor lobes, is known as blower timing.
Moving the gears out or in on the rotors is accomplished by adding or removing

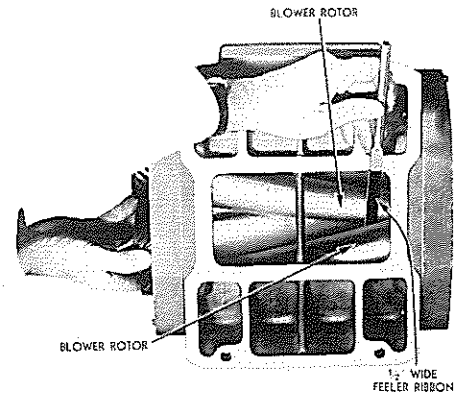

FIG. 16

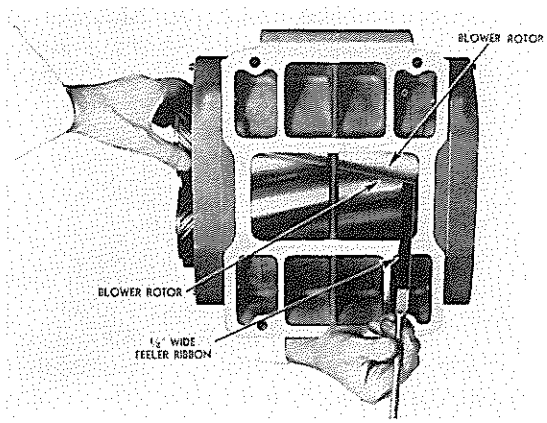

FIG. 17

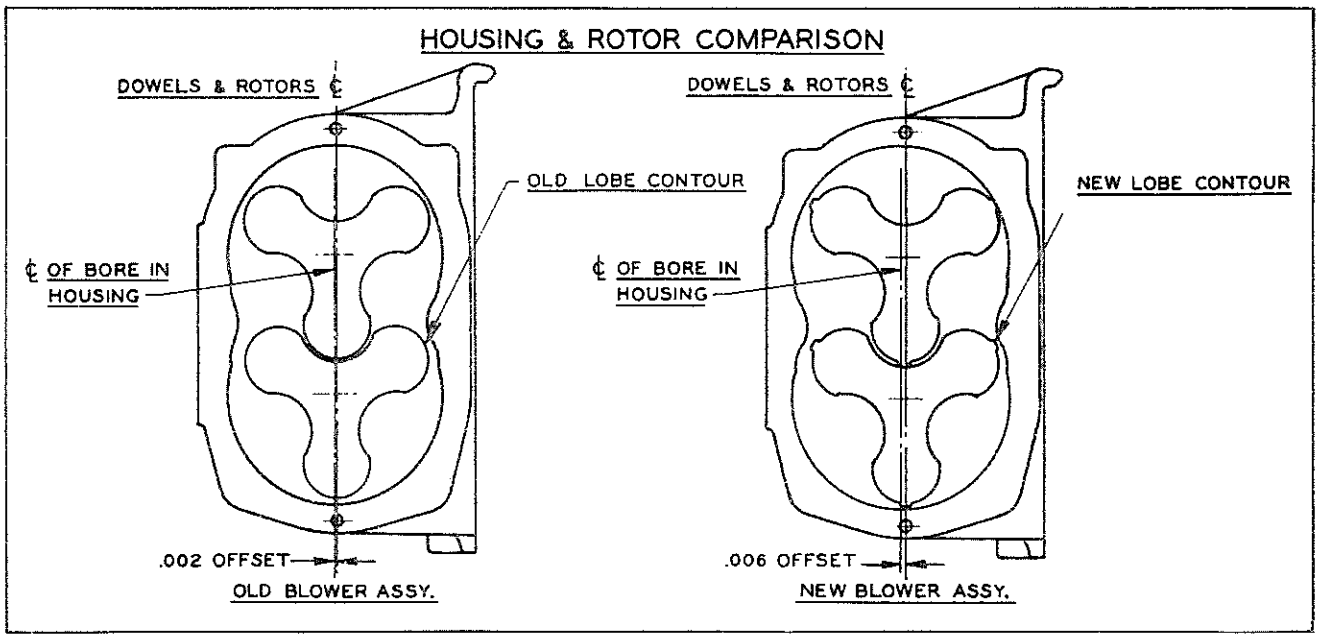

FIG. 18

shims between the gear hub and the bearing back of the gears.

10. Rotor lobe clearance. The clearance should be the same between the leading and trailing sides of individual rotor lobes with their mating lobes.
11. Inspect rotor lobe clearance. The clearance between rotor lobes may be inspected with various thickness feeler ribbons ½" wide. When measuring clearances more than .005" laminated feelers made up of .002", .003" or .005" are more practical and suitable than one single thick feeler.

    The clearance between rotor lobes must be taken between two of the lobes at one end of the blower while revolving the rotors to the right, and also between the same two lobes at the same end while revolving the rotors to the left. This double inspection must be made between each pair of mating lobes at each end and at the mid-section for the three and four cylinder engines, and at several intermediate points on blowers for the six cylinder engine. Always determine point of minimum clearance and adjust for that point.

    Inspection for clearance shows:
    .004" existing on leading side
    .012" existing on trailing side

    .016" total both sides
    ½ total = .008" desired each side.
    Desired minus existing = .008" — .004" =.004" or the amount one rotor must be revolved to produce proper clearance both sides of each lobe.

    A .001" shim back of the blower gear will revolve the rotor .001". Having determined the amount one rotor must be revolved to produce the proper clearance —same as the thickness of shims required—add shims back of either the upper or lower gears, to produce the desired results. Note that adding shims back of the UPPER gear will increase the clearance between the leading and trailing sides of the lower and upper rotor lobes.

    When additional shims are required, both gears must be pulled from the rotors, as directed under "Disassembly of Blower," Topic 79B.

    Install the required thickness of shims back of the proper gear and next to the bearing inner race, and again press the gears tight in place. Re-inspect clearances between rotor lobes.

E. MEASURING ROTOR TO ROTOR CLEARANCE (LATE TYPE ROTORS)

A change has been made in the rotor contour and housing clearance on the blowers used on "HD" series tractor engines. These changes are effective on production tractors. After the present stock of blower parts are used, only new type parts will be available for service.

New housings can be identified by the part number stamped on the upper face of the housing. The first new housings are stamped with a letter "H." Housings used in service that have neither of these markings can be identified by the part number cast on the inside of the housing.

New type rotors can be identified by their revised contour (see illustration). Fig. 18. New type rotors can be used in old housings, but the clearances will be different to those formerly used. Use the new clearances as listed below.

Old rotors can be used in new type housings for the 6-cylinder engine, but not on the 3 and 4-cylinder engines because the clearances obtained are insufficient. Follow instructions previously given to adjust rotor to rotor clearance when old rotors are used in new type housing on 6-cylinder engines. When a blower is rebuilt for service using new type rotors and an old housing or new type rotors and new type housing, the new clearances should be used.

1. Set blower rotors in position as shown in drawing with one lobe of upper rotor pointing straight down.
2. Inspect dimension CC (see Fig. 19) from outlet side of blower. Check this dimension for full length of lobe. This dimension is the same for the 3, 4 and 6-cylinder engines. Set rotor clearance .002" to .006'.
3. Inspect dimension C (see drawing) from inlet side of blower. Check this dimension for full length of lobe. On the 3-cylinder engine, the clearance is .012" to .018", on the 4-cylinder .014" to .020", and on the 6-cylinder .016" to .022".
4. Rotate rotors 60° from location shown in step No. 1 or until one lobe on lower rotor points straight up. Check CC from inlet side of blower. Check this dimension for full length of lobe.
5. Inspect dimension C from outlet side of blower. Check this dimension for full length of lobe.

   These steps must be performed on all three lobes of the blower.

   These clearances are obtained by adding or removing shims from the end of the blower rotors as described in Topic 79-D-11.

   If inspections were carefully made, shims correctly installed, and gears tight in place, the clearances should be correct. If work was done carelessly, the operation will have to be repeated.

After correct clearances are obtained, lock gears in place.

6. Using the 6 capscrews and lockwashers attach blower drive shaft flange to outer face of upper rotor timing gear.
7. Insert splined end of water pump intermediate shaft and coupling into front end of lower rotor shaft and hold coupling shaft while tightening Allen screw securely with $\frac{3}{16}$" wrench.
   Some water pump couplings are not provided with expander screw, in which case, simply insert coupling into engagement with rotor shaft inner serrations.
8. If gasket is unsatisfactory in any way, shellac a new gasket to each blower end

BLOWER ROTOR CLEARANCE CHART

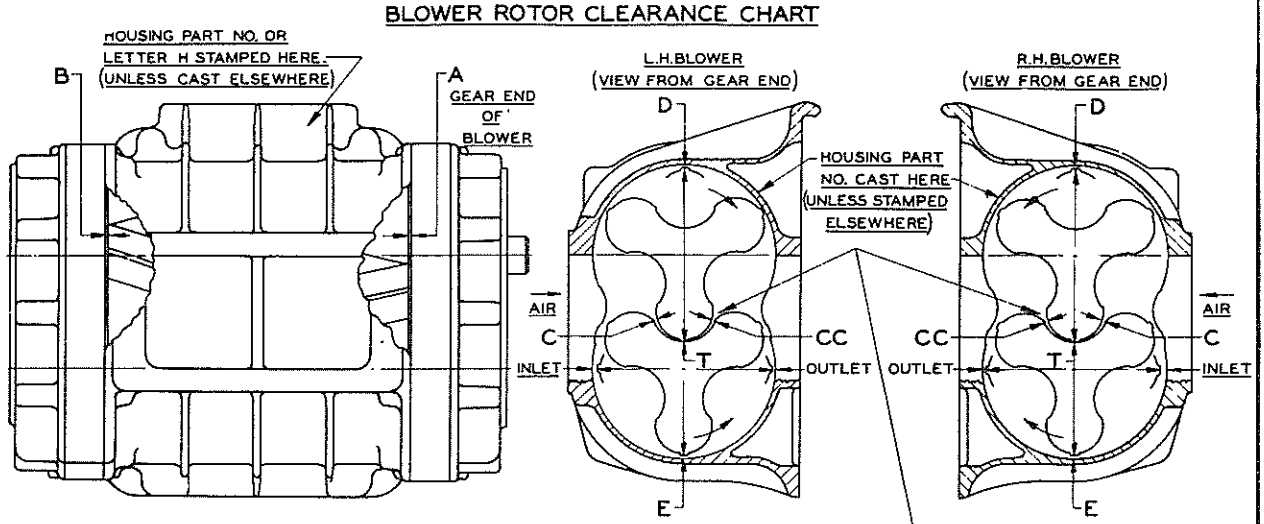

		A		B		C		CC	D		E		INLET		OUTLET		T	
		OLD	NEW	OLD	NEW	OLD	NEW	NEW	OLD	NEW	OLD	NEW	OLD	NEW	OLD	NEW	OLD	NEW
3-71	MIN.	.007	.007	.007	.007	.008	.012	.002	.008	⊕	.008	⊕	.009	.017	.005	.004	.010	⊕
	MAX.	.009	.009	.009	.009	.010	.018	.006	.010	⊕	.010	⊕	.011	.019	.007	.007	.012	⊕
4-71	MIN.	.007	.007	.009	.009	.008	.014	.002	.008	⊕	.008	⊕	.009	.017	.005	.004	.010	⊕
	MAX.	.009	.009	.011	.011	.010	.020	.006	.010	⊕	.010	⊕	.011	.019	.007	.007	.012	⊕
6-71	MIN.	.007	.007	.014	.014	.008	.016	.002	.013	⊕	.013	⊕	.014	.017	.010	.004	.010	⊕
	MAX.	.009	.009	.016	.016	.012	.022	.006	.015	⊕	.015	⊕	.016	.019	.012	.007	.012	⊕

⊕ - CHECKING DIMENSION NOT REQUIRED ON NEW ASSEMBLY.

TIME ROTORS TO DIMENSION ON CHART FOR CLEARANCE BETWEEN TRAILING SIDE OF UPPER ROTOR & LEADING SIDE OF LOWER ROTOR (CC) FROM BOTH OUTLET & INLET SIDE OF BLOWER. (NOTE RELATION OF ROTORS AT THIS TIME.)

CLEARANCE COMPARISON CHART

	3-71		4-71		6-71	
	Inlet	Outlet	Inlet	Outlet	Inlet	Outlet
Old Rotors & Old Housing	.009-.011	.005-.007	.009-.011	.005-.007	.014-.016	.010-.012
Old Rotors & New Housing	.0135-.0155	.0015*-.0035	.0135-.0155	.0015*-.0035	.0185-.0205	.0065-.0085
New Rotors & Old Housing	.0125-.0145	.0085-.0105	.0125-.0145	.0085-.0105	.0125-.0145	.0085-.0105
New Rotors & New Housing	.017-.019	.005-.007	.017-.019	.005-.007	.017-.019	.005-.007

*This clearance insufficient and to correct remove .004 from diameter of rotors.

End clearances have not been changed on the new assembly. (See Chart above.)

An old rotor and a new rotor can be used together; however, maintain these minimum clearances:

		3-71	4-71	6-71
See Chart above	CC	.004 Min.-.006 Max.	.004 Min.-.006 Max	.004 Min.-.006 Max.
	C	.010 Min.	.011 Min.	.012 Min.

FIG. 19

plate cover, supply a lockwasher and plain washer in turn, on the 10 capscrews and attach both end plate covers.

NOTE: Foreign matter inside the blower is apt to ruin the unit. After blower has been assembled, attach the gasket and cover over the air inlet on the outer face of the blower housing to prevent foreign matter entering housing.

F. BLOWER ROTOR GEAR CLEARANCES

1. Previous instructions specified to replace blower rotor timing gears if the blacklash was .002" or more. With the new blower assemblies and also on old asemblies having the revised rotor clearances, a maximum of .004" backlash will be permissible. Gears should be inspected for roughness or uneven wear; if any is apparent, new gears must be installed.

G. INSTALLING BLOWER ON ENGINE

1. Attach the fuel pump, water pump, etc. to the blower before installing it on the engine.

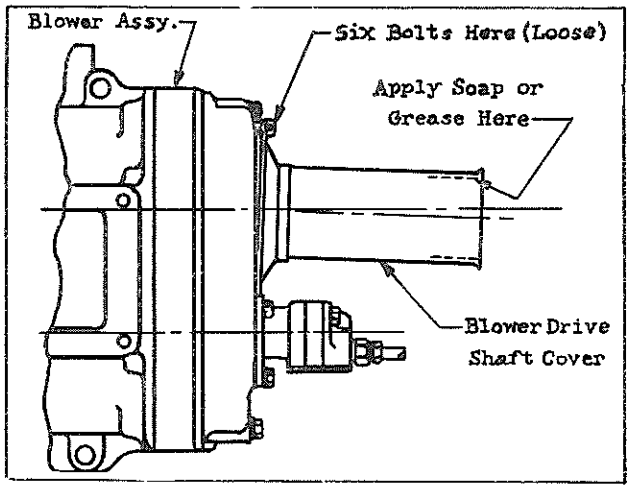

FIG. 20

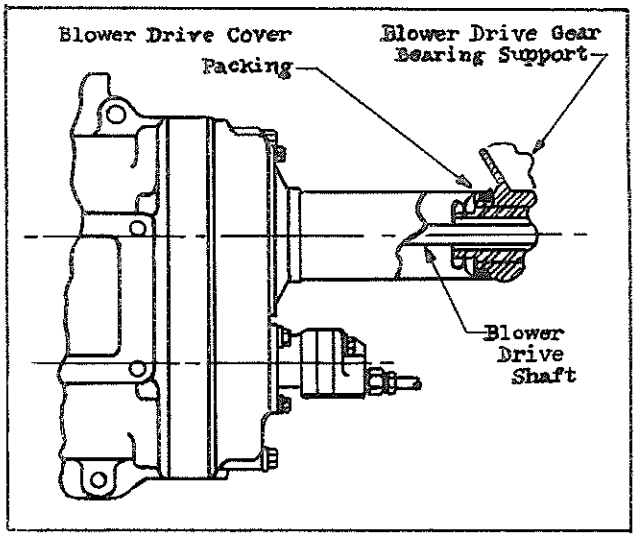

FIG. 21

2. Reverse the removal procedure and attach blower to engine.

H. GASKET SEALING

When replacing worn gaskets on engine repair or inspection work, it is advisable to use a good non-hardening gasket sealing cement to insure improved gasket sealing. It is recommended that cement be used on both sides of principal gaskets, such as cylinder block end plate and cylinder head oil gasket. As for the blower housing gasket, is it necessary to use the cement on the blower only, the side which faces the cylinder block use a thin coat of oil. The laminated metal cylinder head gasket, however, should be installed DRY, since this insures proper sealing for this type gasket.

I. BLOWER ROTOR HELIX ANGLE CHANGED (SERIES 3-71 AND 4-71 ENGINES)

Blower Rotor Assemblies for Series 3-71 and 4-71 have been changed to incorporate the same helix as used on the Series 6-71 engines. This change in angle of lobe helix is illustrated in the accompanying sketches.

The new rotors are not interchangeable with the earlier parts due to the difference in angularity. Therefore, replacements of old or new rotors must be made in pairs. (For this purpose a part number has been assigned to each pair of rotors.)

OLD STYLE PARTS WILL NOT BE MAINTAINED FOR SERVICE.

Rotors otherwise are interchangeable. Blower rotor clearances given in Topic No.79-E apply to all assemblies. This change became effective in production with Engine Nos. 3715308 and 4716969.

The new part numbers are inked on the end of the rotors to aid in identification of the assemblies.

NOTE: The new Rotor Sets include one L.H and one R.H. Rotor Assembly — MATCHED.

Couplings and retainers are no longer attached to the rotors included in the new sets.

SPECIAL NOTE CONCERNING 6-71 ROTORS

The 6-71 Blower Rotor Assemblies will also be furnished as MATCHED SETS only for service replacement.

The new set includes one L.H. and one R.H. Rotor Assembly — MATCHED.

Blower Rotors and Rotor Gears are now marked "upper" and "lower", as shown in the accompanying sketches. The right-hand helix rotors and gears are marked "upper". whereas the left-hand helix rotors and gears are marked "lower". This identification feature will assist considerably in identifying spare parts in stock and also in actual assembly in field service.

Interchangeability is not affected; likewise part numbers remain the same. This change became effective in production beginning with Engine Nos. 3714353, 4716022, and 67111907.

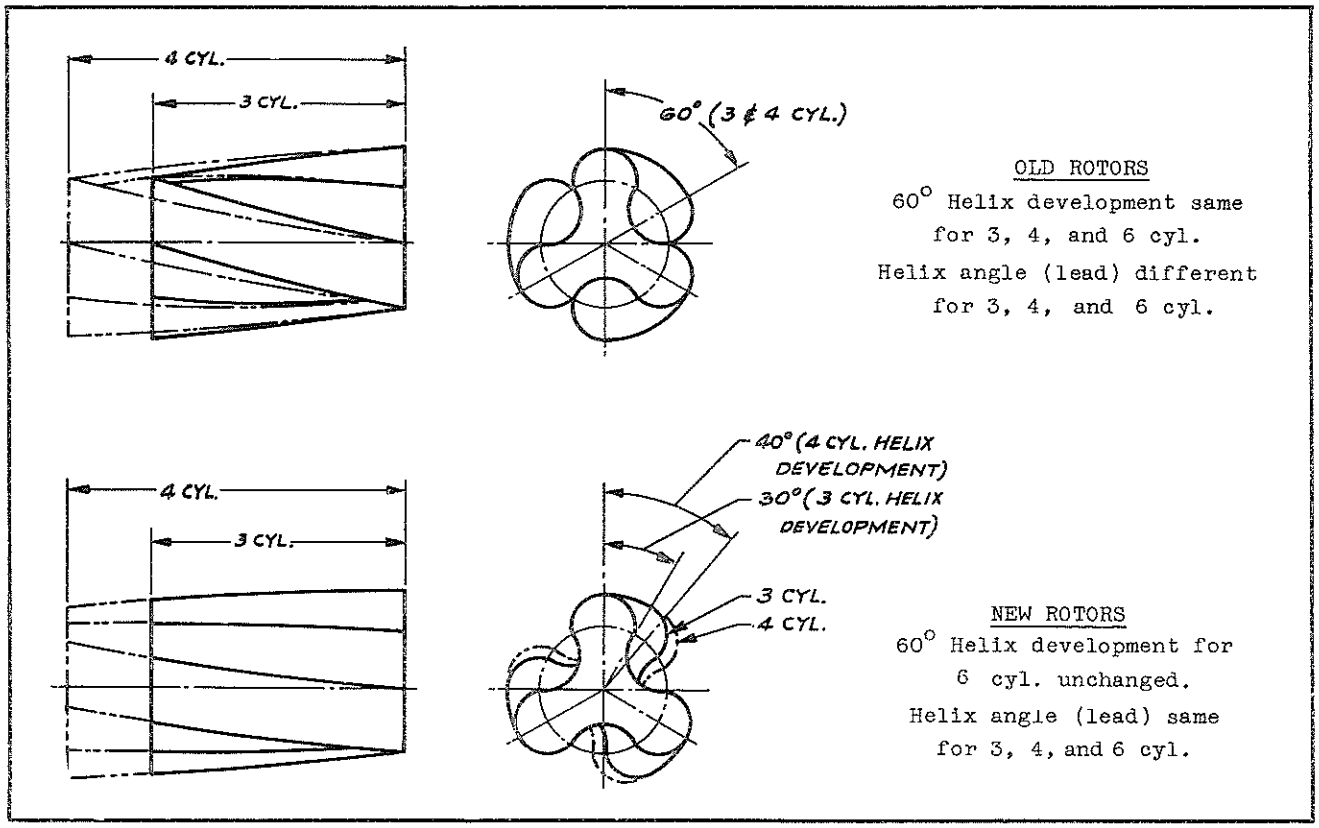

FIG. 1

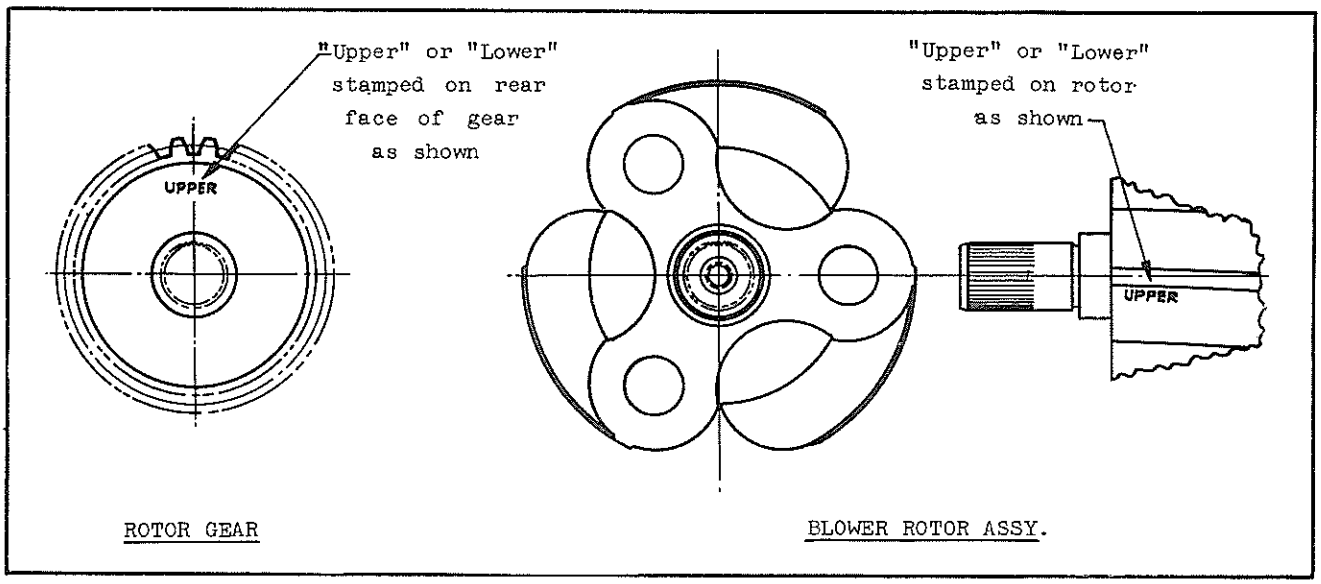
"Upper" or "Lower"
stamped on rear
face of gear
as shown
UPPER
"Upper" or "Lower"
stamped on rotor
as shown
UPPER
ROTOR GEAR
BLOWER ROTOR ASSY.

FIG. 2

80 -- Gear Train

The gear train, as assembled for use in our tractors, comprises five principal gears meshed in sequence as follows: crankshaft gear, idler gear, balance shaft gear camshaft gear, and blower drive gear. The camshaft and balance shaft gears are counterweighted so that the inertia effect of the two, which are meshed together, exactly counterbalance each other. In addition, there are weights on the front ends of these shafts which perform this same function and in addition, with the help of the counterbalances in the camshaft and balance shaft gears, tend to overcome the inertia effect of the reciprocating parts of the engine. It is through this system that the designers have been able to produce a practically vibrationless engine.

The idler gear is provided with a bushing of the same lead bronze material as is used in the main and connecting rod bearing shells. This bushing is permanently installed in the gear so that if it ever should become necessary to replace the bushing, the entire gear must be replaced. Corrosive oil will damage the lead bronze material of this bushing sufficiently to necessitate its replacement. The idler gear runs on a renewable hardened steel hub and normal wear will generally show on the hub instead of in the bushing.

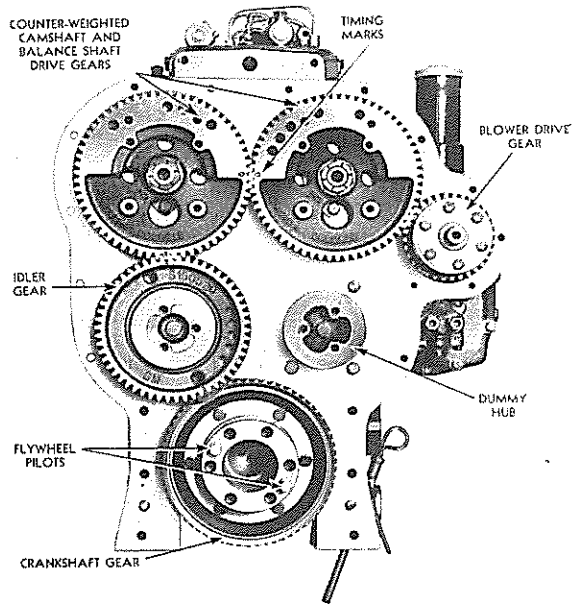

FIG. 1

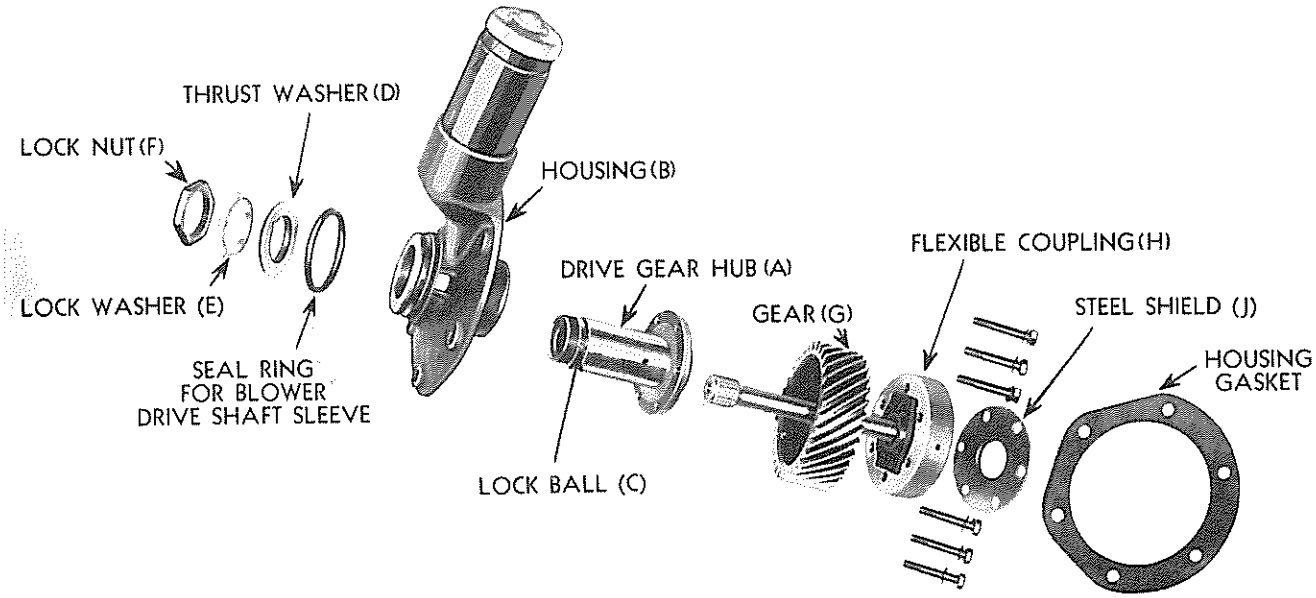

FIG. 2

A. REMOVAL OF BLOWER DRIVE GEAR HUB

1. Remove the blower from the side of the block.
2. Before loosening lock nut on gear hub, an inspection should be made for end clearance between gear hub bushing and thrust washer. If end clearance is excessive, this condition alone is sufficient reason for renewing the housing and inner babbitt bearing assembly.

The specified end clearance between gear hub and thrust shoulder of hub housing is from .003" to .006" and should not exceed .010".

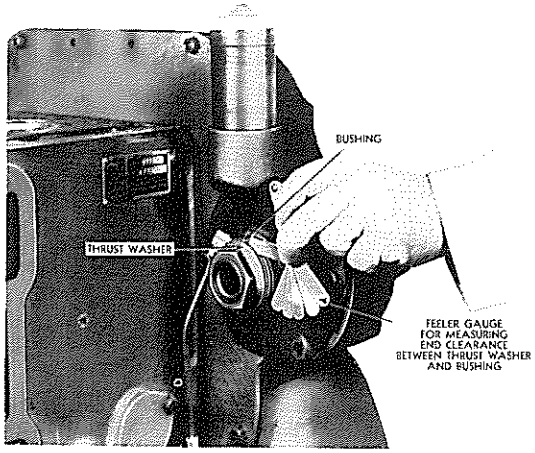

FIG. 3

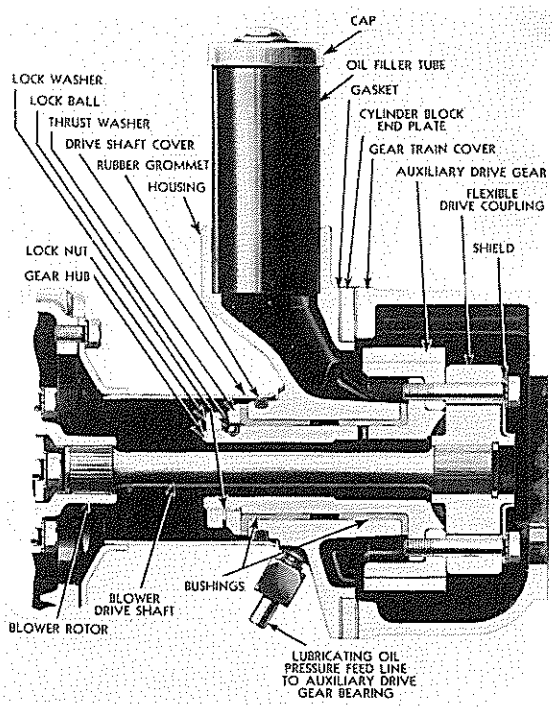

FIG. 4

3. If gear has not been removed from hub and still engages either the camshaft or balance shaft gear, the ears on lockwashers may be straightened and lock nut loosened before housing is completely loosened from cylinder block end plate. If the gear was previously removed, loosening of the lock nut may follow removal of housing, by holding the assembly in a bench vise.
4. Loosen nuts at each end of oil line leading from cylinder block to blower drive gear bearing. The oil line will be freed from the connectors when gear housing is withdrawn.
5. Remove the 2 remaining capscrews holding gear bearing housing to cylinder block end plate, and tap the assembly forward away from the plate.

B. DISASSEMBLING BLOWER DRIVE GEAR UNIT

1. Remove the 6 capscrews securing drive gear, drive coupling, and stamped retainer from gear hub and remove drive coupling.
2. Press drive gear from the gear hub.
3. Remove the previously loosened lock nut, lockwasher, lock ball, and thrust washer, from rear end of the gear hub and withdraw hub from housing.
4. If occasion requires, the rubber grommet may be removed from the front end of bearing housing.
5. If bearing housing is to be changed, remove oil line connection from the housing.

C. INSPECTION OF PARTS

Before assembling blower drive parts into housing, all parts should be inspected for wear.

1. Inspect the inside diameter and thrust faces of bushings inside blower drive gear hub. If bushings show score marks that would affect bearing efficiency, a new housing and bushing assembly must be installed. These bushings are diamond bored in place; therefore, in case of bushing failure, new housing and bushing assembly must be installed.
2. Inspect inside diameter of bushings for wear and roundness, also outside diameter of hub at bearing surfaces (journals) for wear. The proper clearance between bushings and hub journals is from .001" to .002" and must not exceed .005". Should inspection show bushings or journals worn to exceed .005" clearance, a new housing and bushing assembly should be installed.
3. Inspect serrations on blower drive shaft and if worn so that appreciable back lash is felt when shaft is inserted into flexible coupling or blower timing gear drive flange, a new shaft should be used.
4. Inspect driving springs and cams of flexible couplings to see that springs are intact and cams not worn.
5. See that all oil holes are open and cavities free from dirt.
6. Install a new rubber grommet around front end of housing nub over which blower drive shaft housing fits.

D. ASSEMBLY OF BLOWER DRIVE GEAR UNIT

The relative position of all parts constituting the blower drive gear assembly is shown in Fig. 2. All parts having been cleaned and inspected, they may be assembled as follows:

1. Spread some engine oil on outside diameter of drive gear hub "A" and slide hub

into housing "B" from rear of housing.

2. Install locking ball "C" into gear hub and slide thrust washer "D" in place over ball, with large diameter flat face of washer next to thrust face of bushing.
3. Prevent hub from turning by inserting bolts in 2 holes in hub and holding with a bar. Install a new lockwasher "E" next to thrust washer and tighten lock nut "F." Bend the ears of lockwasher against flats on nut to prevent nut from loosening.
4. Tap gear "G" into place on hub with flat finish face of gear away from housing.
5. The outer end of flexible coupling "H" is counterbored for about ¼" on the inside diameter of the hub. With this counterbore away from face of gear, place the stamped steel shield "J" against outer face of coupling, with flange at center of shield pointing away from coupling, and lock in place with lockwashers and capscrews.
6. Install blower drive shaft ring either on shaft or inside of cam coupling and slide shaft into serrations of cam coupling.
7. Apply some engine oil at each thrust shoulder of bushing and again inspect end clearance, as shown in Fig. 3.

E. INSTALLING BLOWER DRIVE GEAR ASSEMBLY TO ENGINE

The blower drive gear assembly may be attached to front face of cylinder block rear end plate by sliding gear and hub through the hole in end plate with finished face of housing up against end plate, install a new paper gasket between end plate and housing. Then place oil line from gear bearing to cylinder block into its 2 connections.

Install the 2 capscrews next to engine. The 4 bolts will be put in place when flywheel housing is installed. The 2 capscrews specified for this position must be used. If the capscrews are too long and project inside of the gear housing they will interfere with the gears.

The blower may be installed at this time without interfering with any other work to be performed on the gear train.

F. REMOVAL OF IDLER GEAR ASSEMBLY

1. Remove the motor from the tractor as described in Topics 74, 75 and 76.
2. Drain the oil and remove oil pan.
3. Remove master clutch from flywheel.
4. Remove flywheel.
5. Remove the combination gear train cover and flywheel housing.
6. Remove the capscrew and lockwasher from center of idler gear hub and withdraw hub, and gear assembly from cylinder block rear end plate.
7. If there is any need for doing so, the spacer and dowel assembly may also be removed at this time by removing the one center retaining capscrew and lockwasher.

G. INSPECTION OF IDLER GEAR AND HUB ASSEMBLY PARTS

Before the parts of idler gear assembly are put back in position, each part should be washed clean, inspected for wear and, if necessary, new parts installed.

1. Inspect the journal on gear hub for scoring and also for wear. Inspect inside diameter of gear bearing for scoring. The clearance between bearing in the gear and the journal should be from .002" to .003" and should not exceed .006". If the clearance exceeds .006", either the gear and bearing assembly or the gear hub or both should be changed, depending on which part or parts are worn.
2. Examine the face of the steel washer, the wearing face of the gear hub, both thrust faces and inside diameter of the gear bushings for scoring and wear. If necessary install new parts. The end play of the idler gear assembly is from .003" to .006" and should not exceed .008".

NOTE: The idler gear bushings are not removable; therefore, in case of bushing failure, a new idler gear assembly must be installed.

H. INSTALLATION OF IDLER GEAR ASSEMBLY

1. Having determined the relative positions of all parts, apply a small amount of cup grease to one face of the steel washer

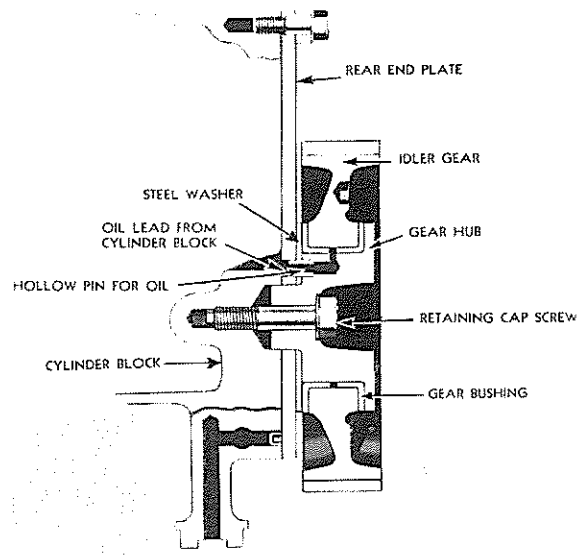

FIG. 5

and set against the cylinder block end plate, with hole in steel washer in line with oil hole. Grease is used on steel washer to hold it in place until hub and gear is installed.

2. Position crankshaft gear, and balance shaft gear so marks align with those on idler gear, and roll idler gear into position, then slide gear hub into place through bore in gear. Special care must be taken to have hollow pin in inner face of gear hub register in hole in end plate which carries oil to idler bearing. Fig. 5.
3. Be sure gear hub is tight against end plate and then lock in place with lockwasher and capscrew in center of gear hub.
4. Attach dummy hub on side of engine opposite to idler gear.
5. Inspect backlash between the various mating gears in the train, which should show from .004" to .006" between each set of gears and not to exceed .010".

I. REMOVAL OF CRANKSHAFT TIMING GEAR

The crankshaft timing gear is attached to crankshaft flange with 6 capscrews. To remove gears, with gear train cover removed, remove the 6 capscrews and slide gear from crankshaft flange.

J. INSTALLATION OF CRANKSHAFT TIMING GEAR

With oil deflector positioned so it can be bolted to hub of gear, and outside diameter lying against rim of gear, slide the crankshaft gear and oil deflector onto the crankshaft with the flat finished face of the gear toward the cylinder block. Position the gear teeth so timing mark "R" on gear teeth aligns with the corresponding mark on the idler gear, and slide gear up against flange on crankshaft. Fig. 1. Due to one off-set hole in crankshaft flange, the crankshaft gear can be located in only one position on flange. Turn either the crankshaft or gear train so bolt holes in web of gear align with the 6 holes in crankshaft flange and install lockwashers and capscrews, drawing gear into place.

FIRST TYPE GEARS.

NOTE: The crankshaft, camshaft and balance shaft gears each have 62 teeth. The idler gear has 54 teeth. Examine gear train for proper timing, note that timing marks on camshaft and balance shaft gears will coincide each complete revolution of the crankshaft. However, when timing is correct, all timing marks coincide at the same time, only once in 27 revolutions of the crankshaft. This must be borne in mind in examining the timing of these gears and the crankshaft rotated till this relation of timing marks is accomplished. FOR THE SECOND TYPE GEARS see Specifications. Topic 67-I.

81 -- Crankshaft

DESCRIPTION—The rigid crankshaft is a high-carbon steel drop forging, carefully heat-treated to insure ample strength and durability. All main and connecting rod bearing journal surfaces are electrically hardened by the Tocco process.

Complete static and dynamic balance of the rotating parts has been achieved by counterweights incorporated with the crankshaft.

Crankshaft thrust is taken through the rear main bearing. Full pressure lubrication to all connecting rod and main bearings is provided by drilled passages within the crankshaft and cylinder block.

Two dowels are provided in the crankshaft flange at the rear for locating the flywheel on the shaft. Six tapped holes, one unequally spaced, are provided for attaching the flywheel. Owing to this feature, a flywheel can be attached in only one position.

SERVICE—Since bearing loads take place on the lower half of the main bearing shells

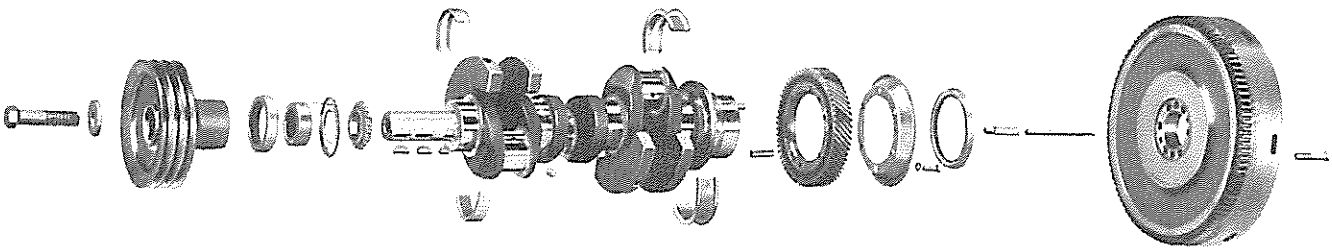

EXPLODED VIEW OF CRANKSHAFT AND FLYWHEEL

FIG. 1

and the upper half of the connecting rod bearing shells, wear on the shell will take place at these points first. If therefore, main bearings or connecting rod bearing trouble is suspected, the oil pan and the main bearing caps as well as the connecting rod bearing caps should be removed, one at a time, and the lower half of the main bearing shells and the upper half of the connecting rod bearing shells inspected for scoring, corrosion, chipping, cracking, or signs of overheating. If crankshaft has been overheated, examine the journals for cracks. The backs of the bearing shells should also be inspected for any bright spots. Bright spots on backs of the shells will indicate that the shells have been shifting in their supports and are unfit for further use.

If the crankshaft journals do not show signs of scoring, overheating, or abnormal wear, it will be unnecessary to remove the crankshaft as the condition may be corrected by changing the worn half of the bearing shell only, providing the opposite half is in usable condition

Loose main bearings will be evidenced by the wobbling of the flywheel or a drop in oil pressure.

If the crankshaft journals show signs of overheating, or are badly scored, then the crankshaft must be removed and a new shaft installed.

A. REMOVAL

1. Remove the motor from the tractor as outlined in Topics 74, 75 and 76.
2. Drain oil from motor and remove the oil pan. (Two on HD14).
3. Remove the lubricating oil pump driven sprocket and bearing assembly from the front main bearing cap on the 3 and 4-cylinder engines. On the 6-cylinder engine, the sprocket is keyed to the pump shaft and will be removed together with the oil pump assembly. Refer to Topic 89 "Oil Pump Removal."
4. Remove the master clutch from the flywheel.
5. Remove the flywheel.
6. Remove the combination gear train cover and flywheel housing.
7. Remove the fan drive pulley.
8. Remove the crankshaft front cover from cylinder block end plate.
9. Remove the spacer (next to oil slinger) from front end of crankshaft.
10. Remove the oil pump drive sprocket and chain.
11. Remove the crankshaft timing gear and oil slinger.
12. Remove the connecting rod bearing caps.
13. Remove the main bearing caps.
14. Remove the crankshaft from the block.

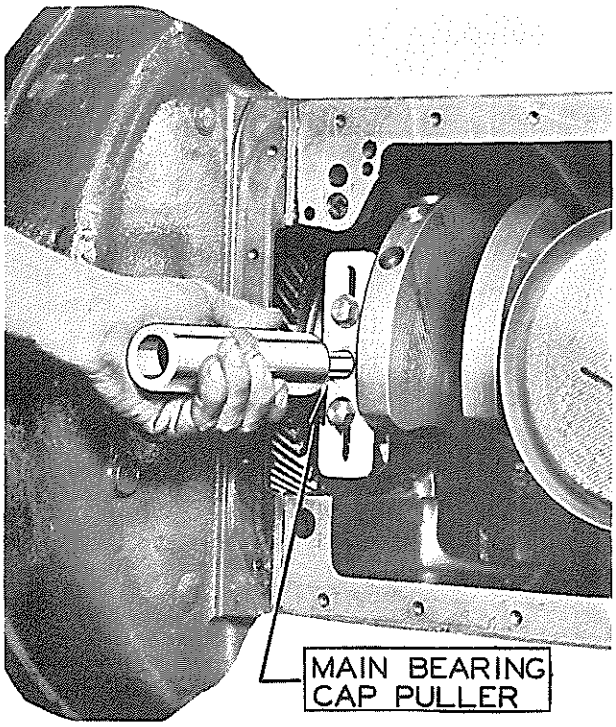

FIG. 2

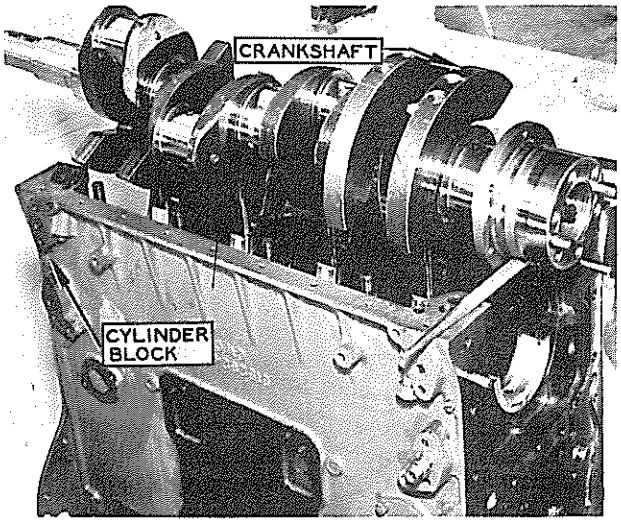

FIG. 3

B. GRINDING OF CRANKSHAFT JOURNALS

CAUTION: All main and connecting rod bearing journal surfaces are electrically hardened by the Tocco process. If regrinding becomes necessary work should be accomplished by some reputable machine works who have suitable equipment to handle precision work of this type. Bearing inserts of .010, .020 and .030 undersize can be obtained. Depth of Tocco hardening approximately .0625.

The crankshaft journals may be inspected for scoring or over-heating without removing the crankshaft. To measure journal diameters, however, removal of the crankshaft is necessary.

C. INSPECTION

When a crankshaft has been removed for any reason, a thorough inspection should be carried out before the shaft is again installed in the engine. Such a check should include the following:

1. Blow out all oil passages with air.
2. Measure the main bearing and connecting rod journals. The journals should be measured at several places on the diameter in order to show the smallest diameter in case the journal has worn out of round. See Specifications. Topic 67-E.
3. Measure the thickness of the main bearing and connecting rod bearing shells as described under "Main Bearing Inspection." The specified clearance on the main and connecting rod bearing is from .002" to .004". Install new bearings when clearance exceeds .008". If the journals are worn excessively a new crankshaft should be installed, or for regrinding see Topic 81-B.
4. If the pilot bearing in the flywheel shows lack of lubrication, a new oil wick must be installed in crankshaft. If the oil wick shows that too much oil is coming through, (which can be determined by the amount of oil in master clutch compartment and on master clutch disc, which will cause it to slip) a new wick must be installed.

D. INSTALLATION OF PILOT BEARING OIL WICK

1. Run a fine wire through one end of wick. ½" from the end, lap back, and twist over.
2. Now run the wire through the crankshaft from the outer end, and pull wick in place leaving the same amount extending through each end, and remove wire.
3. Use a punch, approximately $\frac{3}{16}$", and a small hammer and work as much of the wick in, at each end as possible, to make a good tight job. Care must be used when driving wick in.
   CAUTION: Do not attempt to twist the wick in place as this will leave a groove around wick and will cause it to leak. After working as much of the wick in as possible with a punch and hammer the wick can be trimmed off at each end, leaving ¼" to ⅜" extend through.
4. If the rear crankshaft oil seal becomes worn to the point that excessive oil leaks into the flywheel housing, a new seal must be installed. Refer to Topic 87-C. Main bearings also must be inspected for maximum wear before a new seal is installed. Refer to Topic 82-B.

E. INSTALLATION

The crankshaft is installed by reversing the sequence of operations for removal as described above. The crankshaft main bearing upper shells are grooved for lubrica-

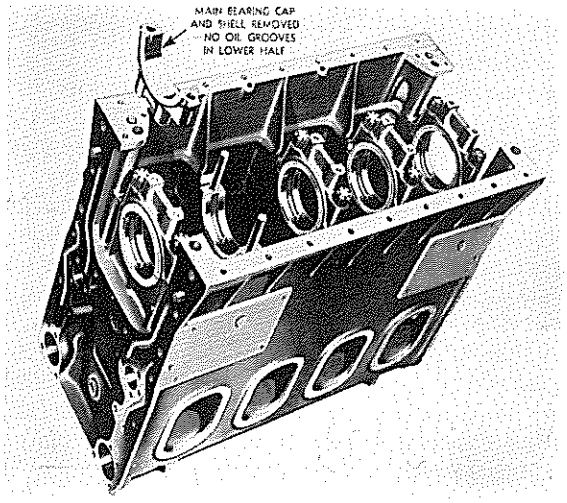

FIG. 4

tion. The lower shells are not grooved. Also, the shells are marked upper and lower. When replacing the bearing shells, preliminary to setting the crankshaft in place, see that the grooved shells are placed in the cylinder block as shown.

1. After the bearing upper shells have been placed in the block, apply some clean NON-CORROSIVE DIESEL OIL on crankshaft before it is installed.
2. The main bearing caps are numbered 1, 2, 3, etc. indicating their respective positions. The marked side is always toward the blower side of the cylinder block. Heeding the marks, place the bearing lower shells in the bearing caps and install caps, locking in place with nuts and cotter pins. When tightening bearing cap bolts, rap caps 2 or 3 light blows with a hammer to assist in positioning shells.
   NOTE: If bearing has been properly installed the crankshaft will turn freely with all main bearing caps bolted tight. Front and rear main bearing caps on all production engines have machined recesses to accommodate flange type thrust bearings. All other bearing caps are plain. Any replacement cap supplies will have the recess and can be used to replace any cap. Replacement caps are not numbered. To position in block see that insert tang groove is toward blower side of engine. On late motors the main bearing caps are made heavier, ½" in the stud boss height. The stud is also made longer ½". INTERCHANGEABILITY IS EFFECTED. The former service bearing cap and short stud will

be maintained for service requirement. However, the new service bearing can also may be used on motors built prior to this change providing the new longer studs also are used.

3. The connecting rods and caps are numbered 1, 2, 3, etc., indicating their respective positions. The marked side is always toward the blower side of the cylinder block. Heeding the marks, install the connecting rod bearing caps with shells in place and lock with nuts and cotter pins.
4. Shellac new gasket to bolting flange of crankshaft front cover and attach to cylinder block with lockwashers and capscrews, finger tight only. Do not tighten capscrews until after front spacer is put in position as shown in Fig. 5.
5. Install the spacer on front end of crankshaft next to oil slinger, as shown. NOTE: This spacer must not be put in place until front cover is put in place, otherwise the oil seal in the cover may be damaged.
6. Install the crankshaft timing gear. Be sure the timing mark coincides with that on the idler gear. Topic 80. Figure 1. NOTE: The holes in the gear and crankshaft are offset so that the gear fits on the crankshaft in only one position.

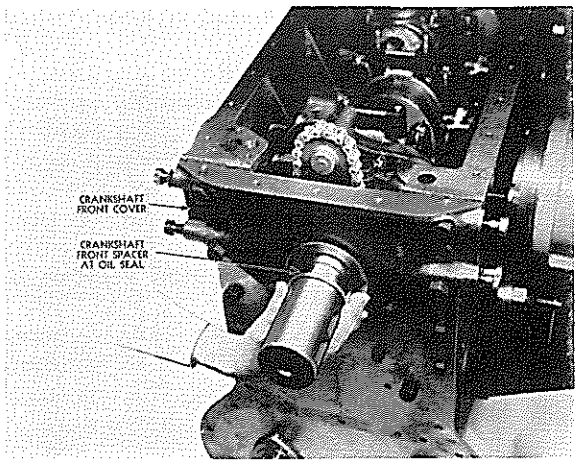

FIG. 5

7. Install the combination gear train cover and flywheel housing.
   NOTE: Refer to Topic 87-C.
8. Install the flywheel.
9. Install lubricating oil pump. Refer to Topic 89-E.
10. Install oil pan.
11. Install motor in tractor as described in Topics 74, 75 and 76.

82 -- Main and Connecting Rod Bearings

DESCRIPTION—Large copper-lead-bronze main bearing shells of the precision type are readily replaceable without machining. The main bearing caps are attached to the crankcase and carefully machined in place to receive the precision bearing shells. Each bearing cap is marked 1, 2, 3, etc., on blower side, and when removed should always be replaced in its respective position.

Crankshaft thrust loads are taken by the rear main bearing. The upper halves of the main bearing shells are seated in the cylinder block. The lower halves are held in place by the main bearing caps, each of which is bolted to the cylinder block by two special steel studs. Each half of the bearing shell is prevented from endwise or radial movement by a tang at the parting line on one side of the bearing. Each bearing cap is locked from sidewise movement by a milled seat in the cylinder block.

All upper halves of the main bearing shells carry a circular groove midway between the bearing edges which runs from parting line to parting line, and furnishes registration with the oil holes in the crankshaft journals at all times. An oil hole in this groove midway between the parting lines, provides oil registry with holes in the cylinder block, by way of the bearing shells, to the drilled passages in the crankshaft leading to the various connecting rod bearings.

All lower halves of the main bearing shells have no oil grooves; consequently, the upper and lower halves of these bearing shells are not interchangeable.

A very effective oil seal has been incorporated at the rear main bearing. This seal consists of a special treated leather ring (seal) in a stamped retainer pressed into the flywheel housing and an oil slinger attached to the rear face of the crankshaft timing gear. The rolled-over inner diameter of the leather is held snugly against the crankshaft journal by a coil spring, to prevent oil from creeping along the journal into the flywheel compartment. The slinger, attached to the gear, traps and throws the surplus oil from the gear teeth back into a cavity adjacent to the gear. The oil from this cavity flows back into the oil pan. The leather ring and coil spring constitute the oil seal assembly, which is readily replaceable.

An oil seal of the same design is used forward of the front main bearing. This seal is pressed into the crankshaft front cover.

A. REMOVAL OF MAIN BEARINGS

1. Remove the engine support cover and drain the oil from the engine.

2. Remove the oil pan (upper and lower on the "HD 14").
3. On the 3 and 4 cylinder engines, the lubricating oil pump assembly is bolted to one of the main bearing caps and the pump drive sprocket and bearing assembly is bolted to the front main bearing cap. If necessary, remove the oil pump and discharge pipe assembly, or the drive sprocket bearing, and then remove the bearing cap.
4. The bearing cap having been removed, insert a ¼" x 1" bolt with a ½" diameter and 1/16" thick head into the crankshaft main bearing oil hole, then rotate the shaft to the right (clockwise) and roll the bearing shell out of position as shown in Fig. 1. The head of the bolt should

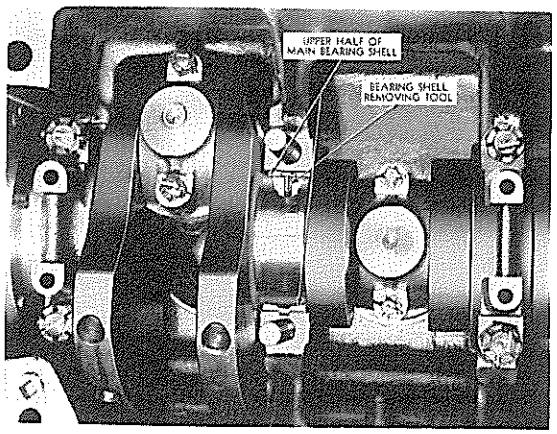

FIG. 1

not extend beyond the outside diameter of the shell. The upper half of all the main bearing shells may be removed in this manner except the rear main. On this bearing, the upper shell must be removed by driving on the edge of the bearing shell with a small curved rod, at the same time revolving the crankshaft, thus rolling the shell from position. Fig. 2.

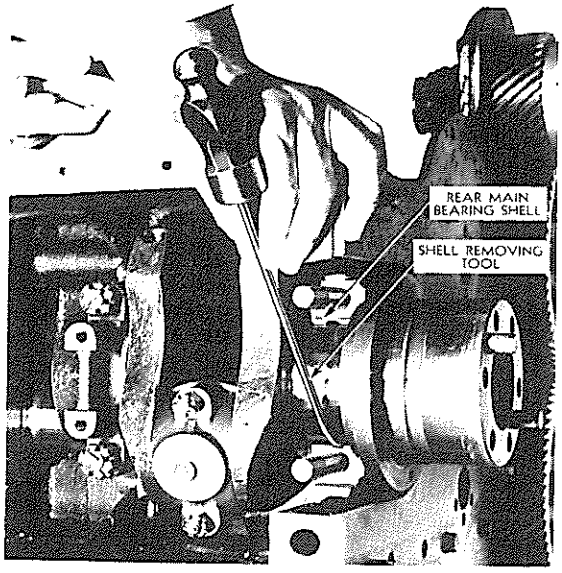

FIG. 2

B. INSPECTION OF MAIN BEARINGS

As stated above, the main bearing shells are of the precision type and are replaceable without machining. The clearance between the main bearing shells and the crankshaft journals is from .002" to .004" and should not exceed .008". Bearing shells when in place have .001" larger diameter at the parting line than at 90° from the parting line. The thickness of the bearing shells 90° from the parting line is .155".

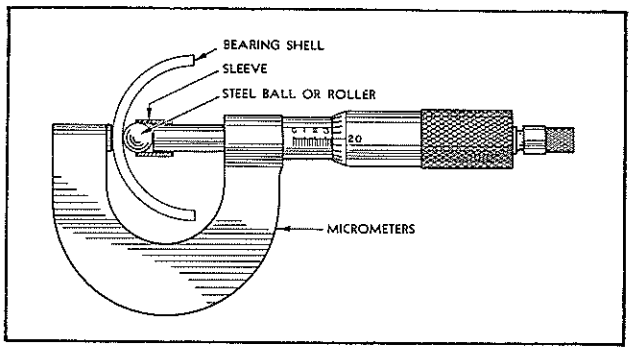

FIG. 3

The 2 shells do not form a true circle when not installed and when measured for inside diameter should be installed in the caps and block, with caps bolted in place. Fig. 4. The 2 halves of the shells have a squeeze fit in the case and cap, and must be tight when the cap is drawn down. The shells may be measured with micrometers at the points marked "C", and any variation from .155" will show the amount of wear on the particular shell being measured. Fig. 4.

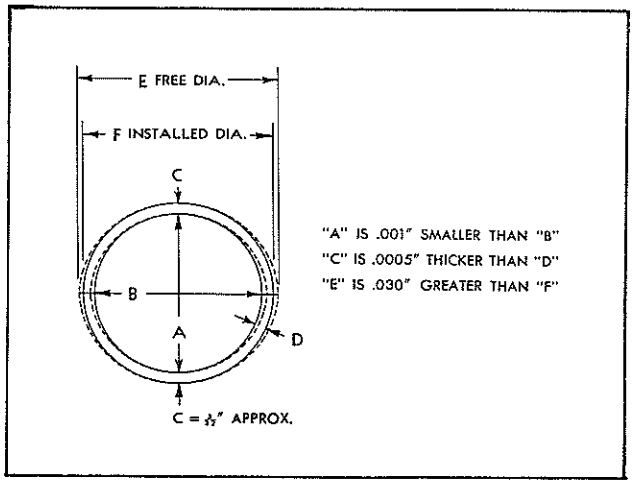

FIG. 4

(NOTE: All the main bearing load of these engines is carried on the lower half of the bearings only. Any chipping, pitting, scor-

ing, or overheating, of the main bearing shells may be observed by removing the main bearing caps.)

If main bearing trouble is suspected from the running of the engine, remove the oil pan; remove the main bearing caps—one at a time—and examine the bearing shells. As no load is imposed on the upper half of the shell, this half may not require changing. Bearing shells are furnished as upper or lower halves separately.

In cases of main bearing shell changes, the crankshaft journal should be examined for over-heating, scoring, or excessive wear. If crankshaft journals have been overheated, a new crankshaft should be installed. If they have been scored or worn and not overheated, they may be reground, and undersize bearing shells installed. See Topic 81-B.

C. INSTALLATION OF MAIN BEARINGS

To install a main bearing shell with the crankshaft in place, reverse the sequence of operations for removal. The upper and lower halves of the main bearing shells are not alike. The UPPER half IS GROOVED for lubrication and the LOWER half IS NOT. Always be sure to install the grooved shell in the cylinder block and the non-grooved shell in the bearing cap, otherwise the oil supply to the connecting rod bearings will be cut off.

1. When installing the upper half of main bearing shells with crankshaft in place, start the end of the shell having no tang around the crankshaft journal, so that when shell is in place tang will fit into groove in the shell support. NOTE: Main bearing caps are bored in position and marked 1, 2, 3, etc. Whenever bearing caps are removed, they should be replaced in their original positions with marked side of caps toward blower side of cylinder block.
2. With lower half of bearing installed in bearing cap, replace cap and draw up evenly. The cap stud nuts may then be tightened and locked. NOTE: Since the bearing shells have a squeeze fit in the cap and block, bearing cap nuts should be drawn tight so shells will not shift. If bearings have been installed properly, the crankshaft will turn freely with all main bearing caps bolted tight.

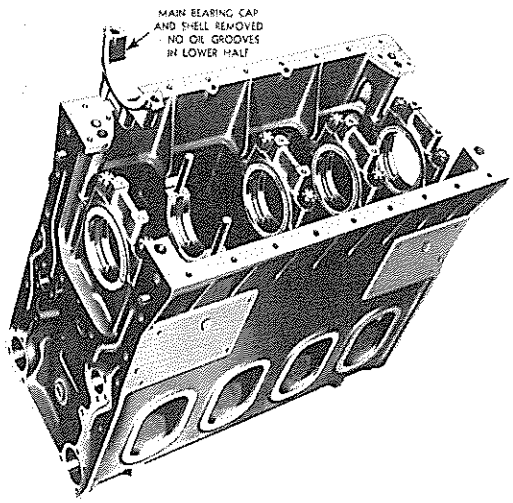

FIG. 5

D. REMOVAL OF CONNECTING ROD BEARINGS

1. Remove the cotter keys, nuts, and bearing caps.
2. Push the piston up in the cylinder and remove the upper half of the bearing.

E. INSPECTION OF CONNECTING ROD BEARINGS

All the connecting rod load of these engines is carried on the upper halves of the bearings only. Any chipping, pitting, scoring, or over-heating of the connecting rod bearing shells can be determined by taking off the rod caps, one at a time, and pushing the piston up in the cylinder so that the top half of the bearing can be observed.

F. INSTALLATION OF CONNECTING ROD BEARINGS

The upper and lower halves of the connecting rod bearing shells are not alike. The LOWER half has ONE CONTINUOUS groove from parting line to parting line for lubrication and UPPER half has one short groove at each parting line.

1. Place the correct half of the rod bearing in the connecting rod and install it on the crankshaft.

   NOTE: When the bearing is in place, a tang on the bearing shell will fit in a groove in the connecting rod.
2. Place the LOWER bearing shell in the connecting rod cap and install. Draw the cap up snug then the nuts can be tightened and locked.

   NOTE: The connecting rods and caps are all marked 1, 2, 3, etc., when they are removed they should be replaced with the marked side towards the blower.

   If bearings have been installed properly, the crankshaft will turn freely with all main bearing caps and connecting rod caps bolted tight.
3. Install oil pan and engine support cover.

83 -- Piston and Connecting Rod

DESCRIPTION—Each connecting rod is made of drop-forged heat-treated carbon steel, and forged to an "I" section with a closed hub at the upper end and an integral cap at the lower end. The rod is rifle-drilled for lubrication to the upper end, and is equipped with an oil spray jet for cooling of the piston head.

The lower end of the connecting rod shank is fitted with an orifice which meters oil to the rifle-drilled connecting rod. The crankpin bearings are steel-backed lead-bronze-lined shells of the precision type, without shim adjustments. The upper and lower halves of the connecting rod bearing shells (crankpin-big end) are different; therefore, are not interchangeable, but are replaceable without machining.

The upper bearing shell is grooved midway between the bearing edges, part way up from each parting line, with an oil hole through the shell at the termination of each groove. The lower shell has an oil groove in line with that of the upper shell and circling the shell from parting line to parting line. These grooves maintain a continuous registry with the oil holes in the crankpins, thereby providing a con-

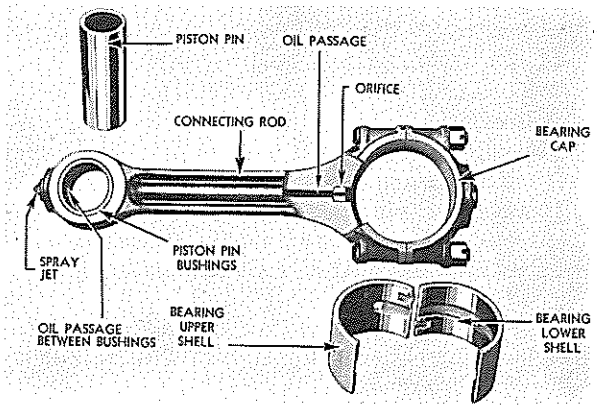

FIG. 1

stant supply of cooling oil through the hollow connecting rod to the piston pin bearings and the spray jet.

A helically-grooved steel-backed bronze bushing is pressed into each side of the connecting rod upper end for the piston pin bearings. A cavity of approximately $\frac{3}{16}$" between the inner ends of these bushings, registering with the oil passage in the connecting rod, forms a duct around the piston pin whereby the pin bearing is lubricated and oil also is forced to the spray jet for piston cooling. The piston pin floats in the bushings of both the piston and connecting rod.

DESCRIPTION — Malleable iron pistons with extra long skirts, accurately ground the full length, are plated with a protective coating of either tin or Parco Lubrite, which permits close fitting. The top of the piston forms the combustion chamber and is designed to displace the air into close proximity to the fuel spray.

To add strength, rigidity, and cooling effect the head of each piston is cast with ribs on the inside. The ribbed head is cooled by lubricating oil forced from a spray jet on the top of the connecting rod.

Two steel-backed bronze bushings, with helical grooved oil passages, are pressed into the piston to provide a bearing for the hardened, floating piston pin. After the piston pin has been installed, the hole in the piston at each end of the pin is sealed with a tight steel cap and locked in place with a lock ring. Thus, lubricating oil returning from the sprayed piston head and working through the grooves in the piston bushings is prevented from reaching the cylinder walls.

A balancing rib is provided on the inside at the bottom of the piston skirt. Because of this design, all pistons are balanced to close limits.

Each piston is fitted with six cast iron rings of conventional cut-joint type. Four ⅛" wide, tin-plated grooved compression rings are placed above the pin and two $\frac{3}{16}$" wide special oil-control rings scrape off the excess lubricating oil thrown onto the cylinder walls.

A. MOTOR RUN-IN SCHEDULE

After installation of new motor kits or piston rings, the motor must be run to allow rings to seat and avoid the possibility of liner scoring and excessive oil consumption. When motors are first started after installation of motor kits or piston rings, excessive smoking and raw fuel and lubricating oil may appear in the exhaust. This condition will correct itself as the motor is run in.

Before starting motor after overhaul inspect motor oil, fuel oil, and cooling system and see that air cleaners have been properly serviced. Close radiator shutters and start motor allowing it to run at ½ throttle. See that all instrument panel gauge readings are normal.

The most important factor in running in a new engine or one which has just been overhauled is OPERATING TEMPERATURE. The engine temperature must be brought to normal, 175° to 185°, as soon as possible and carefully maintained as nearly as possible within this range. Temperatures of 150° and below are conducive to the formation of gum and sludge, both highly detrimental to an engine. DO NOT, THEREFORE EVER IN THE LIFE OF A TRACTOR, ALLOW IT TO OPERATE AT LOW TEMPERATURE.

The following run-in schedule is recommended:

½ hr. at half throttle
3 hrs. at two-thirds throttle
3 hours at full throttle

After this run-in, inspect engine lubrication

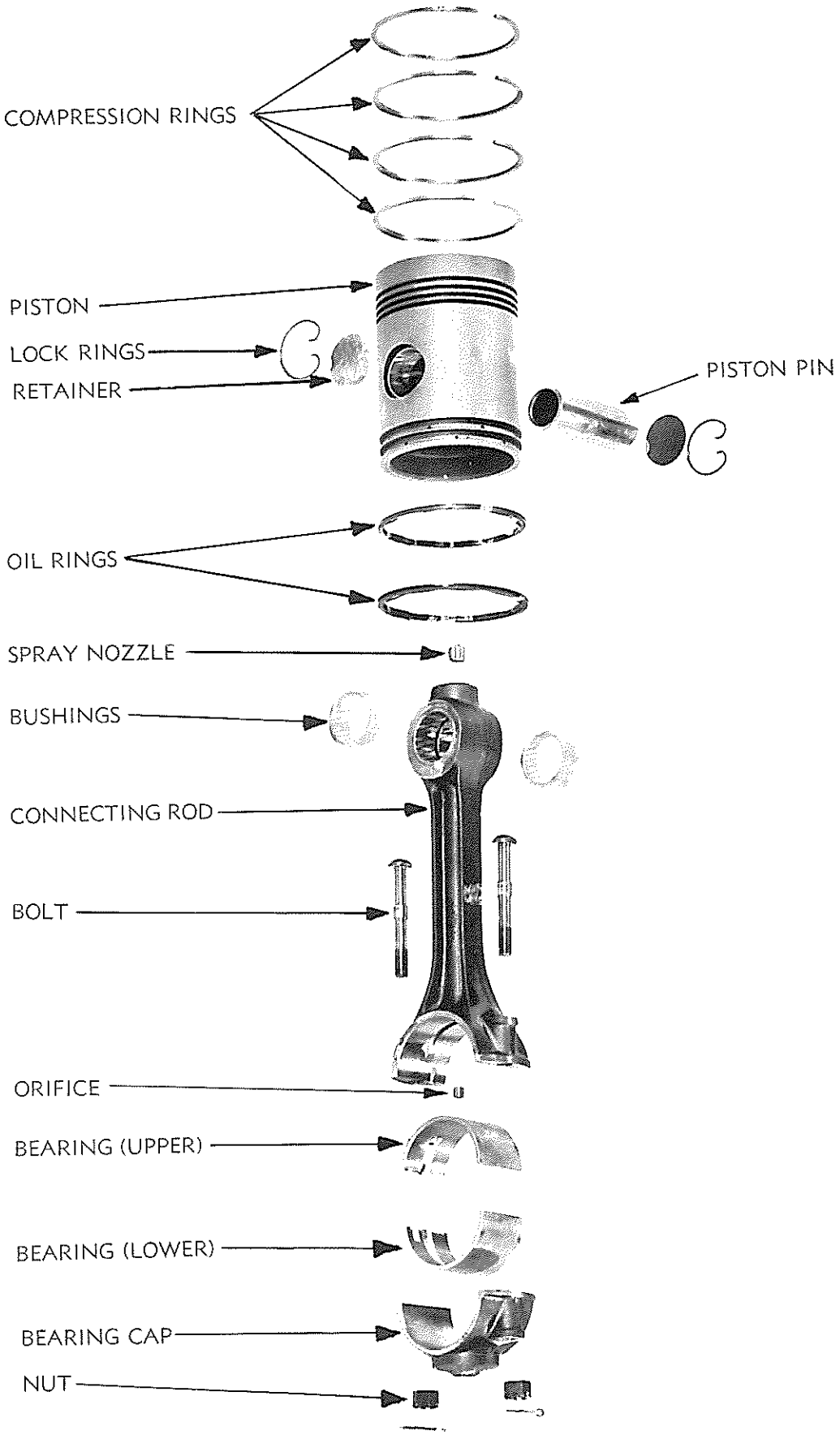
COMPRESSION RINGS
PISTON
LOCK RINGS
RETAINER
PISTON PIN
OIL RINGS
SPRAY NOZZLE
BUSHINGS
CONNECTING ROD
BOLT
ORIFICE
BEARING (UPPER)
BEARING (LOWER)
BEARING CAP
NUT

FIG. 2

and all points of adjustment, making any necessary minor corrections.

Tractor can then be put to work but should operate only under light load for the next 24 hours. Use a gear that will move the load without reducing engine speed. After another examination and necessary adjustments tractor is ready for full load.

B. PISTONS: LUBRIZING REPLACES TIN PLATING

1. The new lubrizing process replaces the tin plate on pistons for production and service. "Lubrizing" is effective with engine serial numbers 3713858, 4715786, and 67110126.
2. PISTONS WITH THE NEW TREATMENT WILL BE JET BLACK IN APPEARANCE, and easily identified from the former bright tin plated pistons. The process is a chemical treatment which converts the finish ground surface to a friction-free black coating providing a scuff-resistent surface for break-in purposes. However, interchangeability is in no way affected by this change since dimensionally the piston remains unchanged.

C. REMOVAL

1. Remove cylinder head. Refer to Topic 78-A.
2. Remove engine support bottom cover, drain the oil and remove the oil pan. (On HD-14, 2 Pans.)
3. Remove the lubricating oil pump (Only necessary when working on a piston directly over the oil pump assembly.)
4. Remove the carbon from the upper inside circumference of the cylinder liner.
5. Remove the cotter pins, nuts and bearing cap from the lower end of the connecting rod and push the piston and rod assembly out through the top of the cylinder block. PISTONS CANNOT BE REMOVED FROM BOTTOM OF CYLINDER BLOCK.
6. The piston rings may be inspected and changed and measurements taken on the outside diameter of the piston skirt without further disassembly.

D. INSPECTION

As the gummy deposits are not always easily removed from the piston walls and ring grooves with fuel oil or solvent, these parts may be cleaned by using Simonize-Chrome cleaner or its equivalent, and then blowing dry with compressed air. After cleaning, the piston skirt, the piston rings and ring grooves should be thoroughly inspected.

The tin coating on the skirt is less than .0007" thick and the presence of this coating of soft metal will indicate the practical absence of wear. If the tin is worn off in spots, a careful examination should be made for score marks or other indications of lack of proper piston clearance.

A scored piston should not be re-used. Install new piston.

The clearance between cylinder liner and piston skirt should be from .006" to .008".

E. FITTING PISTON

Measurement of piston and cylinder liner bore should be taken at room temperature (70 deg. F.).

Measurements should be taken on the piston skirt lengthwise and crosswise of the piston pin.

Cylinder bores should be measured with the gauge shown in Fig. 3 both lengthwise and crosswise of the cylinder block throughout the entire length of the cylinder liner.

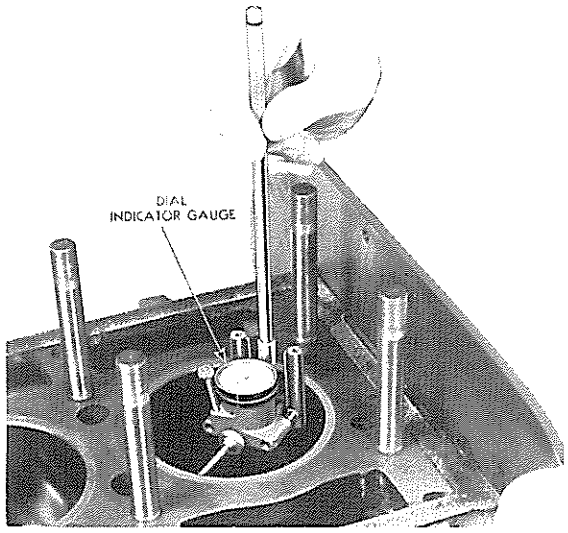

FIG. 3

The piston should be round within .001".

The cylinder bore should be round and straight within .001".

The clearance of the piston in the bore may be checked crosswise of the pin by using a

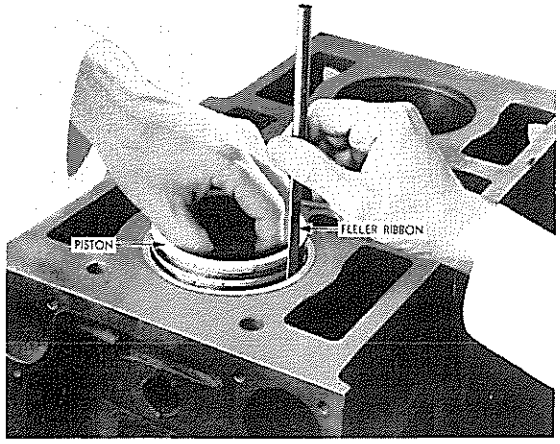

FIG. 4

½ inch wide feeler ribbon between the piston and cylinder liner. Fig. 4.

With a .006″ clearance between piston and liner, a .005″ feeler may be moved freely.

Since cylinder liners are furnished in standard size only, pistons are furnished in standard size only. The upper part of the piston (above the upper compression ring) is not tinplated and does not touch the cylinder wall. If this part of the piston shows any coating of hard carbon, the rings must be removed and the piston surface, as well as the ring grooves, thoroughly cleaned. The piston head should be absolutely clean outside as well as the cooling ribs inside. Any thick coating of carbon inside the piston head indicates failure of cooling oil supply and necessitates the cleaning of orifice at lower end of connecting rod, spray jet at upper end of connecting rod, oil passage in the connecting rod. Piston pin bushings in connecting rod may have become loose and worked toward each other, blocking oil supply.

Before disassembling the rings, they should be inspected for free fit in the grooves, side clearance, and wear. The presence of the original tool marks on the piston ring surfaces indicates the practical absence of wear. To avoid any breakage use special tool, Fig. 5 when removing or replacing piston rings. Care must be taken not to over-stress the piston rings by spreading the ends more than necessary to slip ring off and on the piston.

New piston rings should always be used with new pistons; furthermore, if the engine has been in service for some time, even though the same pistons are again used, it is advisable to use new rings.

NOTE: In some instances, replacement pistons and liners in the field have been improperly fitted, resulting in premature failure of these parts.

Pistons and liners are marked "A" - "AA" - "AAA" on the upper rim of each of these parts to denote their actual manufacturing limits, principally, to allow closer selection of correct parts in production. Even with these markings, it is production practice to use feeler checking across the pin and also at the thrust surface for the full length of the bore with liners installed and using the piston attached to the connecting rod inverted to insure proper fit before assembly. SERVICE SHOULD USE SAME METHOD TO INSURE PROPER FIT.

According to the markings of the pistons and liners, their use in the various mated sets would be approximately as listed below:

"A" Piston with "A" Liner — .0065″ - .0075″ Permissible

"A" Piston with "AAA" Liner—.0070″ - .0080″ Permissible

"AA" Piston with "A" Liner—.0055″ - .0065″ (Use only .006 or over)

"AA" Piston with "AAA" Liner — .0065″ - .0075″ Permissible

"AAA" Piston with "A" Liner—.0050″ - 0060″ Not Permissible

"AAA" Piston with "AA" Liner — .0055″ - .0065″ (use only .006 or over)

It is extremely important that PISTONS BE FITTED WITH NOT LESS THAN .006 RUNNING CLEARANCE. Bores in a tapered or out-of-round condition should be corrected by honing out the cylinder block slightly to insure loose fit of cylinder liners. A Sunnen hone or equivalent is recommended for this purpose since the stones can be adjusted, so removal of high spots is possible. Slightly scuffed liners, if usable, should be polished or lapped to remove surface irregularities. Pistons should not be fitted to cylinder bores with excessive out-of-round or taper. Do not confuse wear with out-of-round or taper. To obtain a satisfactory running clearance, pistons and liners should be selected for fit in the following manner:

1. Clean cylinder block and assemble liner in place.
2. Clean pistons and bores thoroughly.
3. Place a ½″ wide .005″ thick feeler ribbon in cylinder bore. Feeler ribbon should extend full length of bore.
4. Assemble piston in running position in cylinder with piston pin boss axis parallel to crankshaft axis.
5. Pull on feeler ribbon must not exceed 6 lbs. at room temperature when properly used as indicated below.
   a. With feeler inserted in bore at 90° to axis of crankshaft and pistons located first at top then at bottom of bore.
   b. As above with feeler ribbon inserted in a position parallel to axis of crankshaft.
6. Mark piston and assemble in cylinder bore in which it has been fitted.

When checking with feeler, if bind exists in one place only when fitting piston in new liner, remove liner and rotate part 90°. Reassemble liner and check again. (Due to the thin wall, it is possible for liners to go slightly out of round while in stock. Liners should be stocked standing on end).

After assembly of pistons and liners, proper run in schedule should be followed to insure proper seating of parts.

Above procedure with .005 feeler provides an actual running clearance of .006. For an

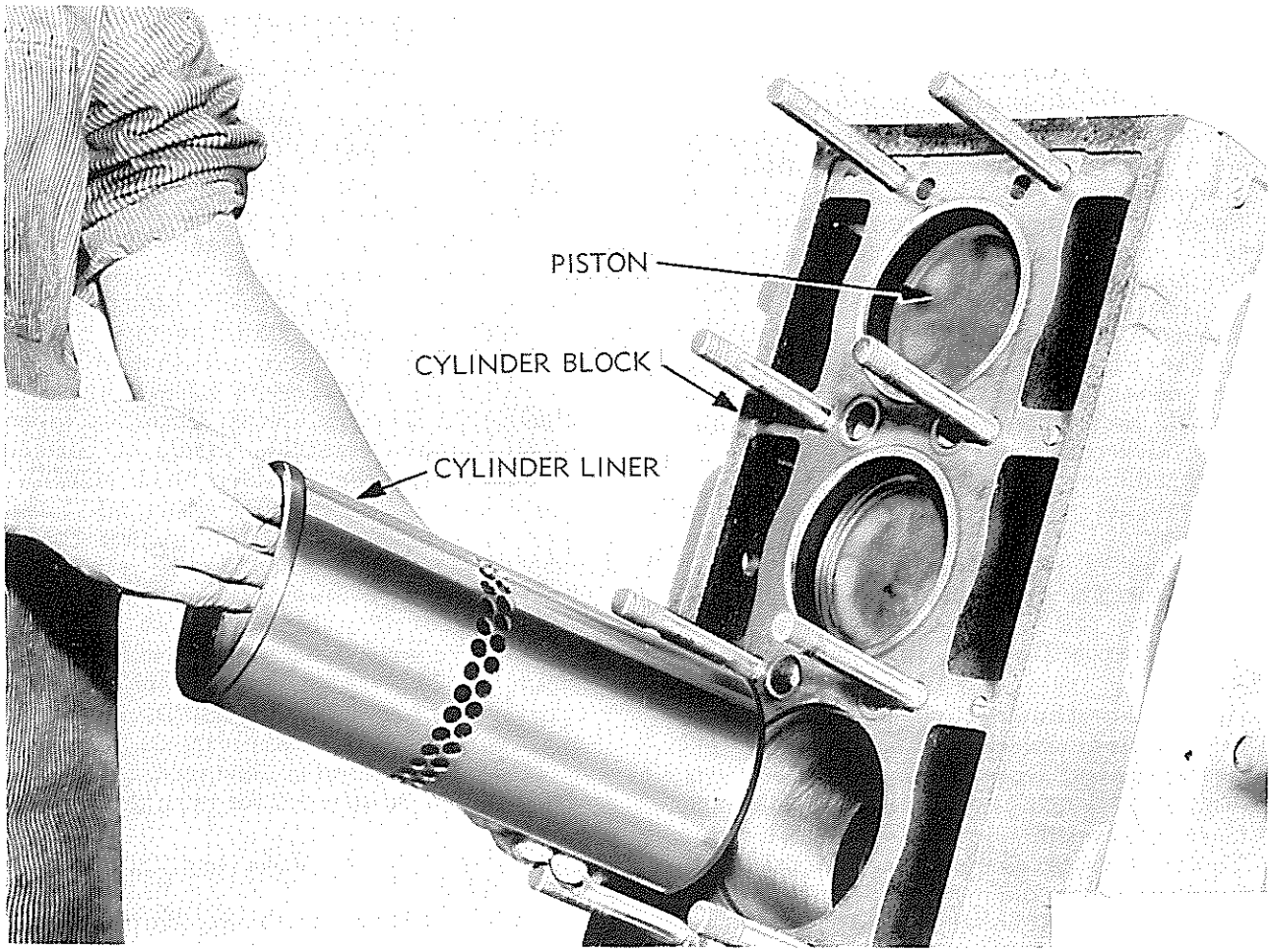

FIG. 4 A

actual running clearance of .007 the feeler thickness should be .006.

F. FITTING PISTON RINGS

When fitting piston rings, the gap between the ends of the ring should be measured with the ring inserted in the bore parallel with the top of the cylinder block, Fig. 6. This may be done by starting the ring in the bore and then locating the ring by sliding piston into bore on top of ring.

The specified gap on the compression rings is from .020" to .025" and on the oil control rings from .010" to .020". The gap may be changed by using a thin, flat, fine mill file.

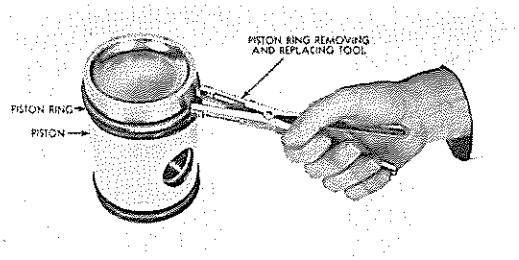

FIG. 5

After proper gap has been fixed, the rings may be installed on the piston with tool as shown in Fig. 5.

NOTE: The oil rings are the three-piece type and should be placed in the grooves as shown in Fig. 7-B. This is important to control piston lubrication properly. To obtain best results, the piston rings specified by the manufacturer should be used. Some engines have two gold seals, one plain, and one hooked oil ring on the pistons. The latest engines have four tinned groove compression rings. The use of the latter is correct when installing new rings.

Stagger the ring gaps around the piston and apply some oil to the piston wall, rings, and lower connecting rod bearing before installing in cylinder block.

1. Effective with engine serial numbers 3713834, 4714786 and 6719873, all production engines will have the two oil control piston rings installed in the double scraper position, as shown in Fig. 7B, all hooks facing down.
2. In line with the above production

change, it is recommended that field service follow the same procedure for installing piston rings in the field at time of engine reconditioning, since this new arrangement has proved to be the most satisfactory for more effective oil control.

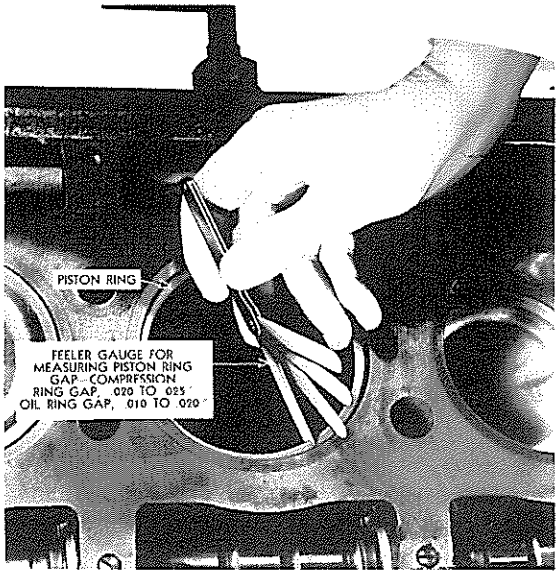

FIG. 6

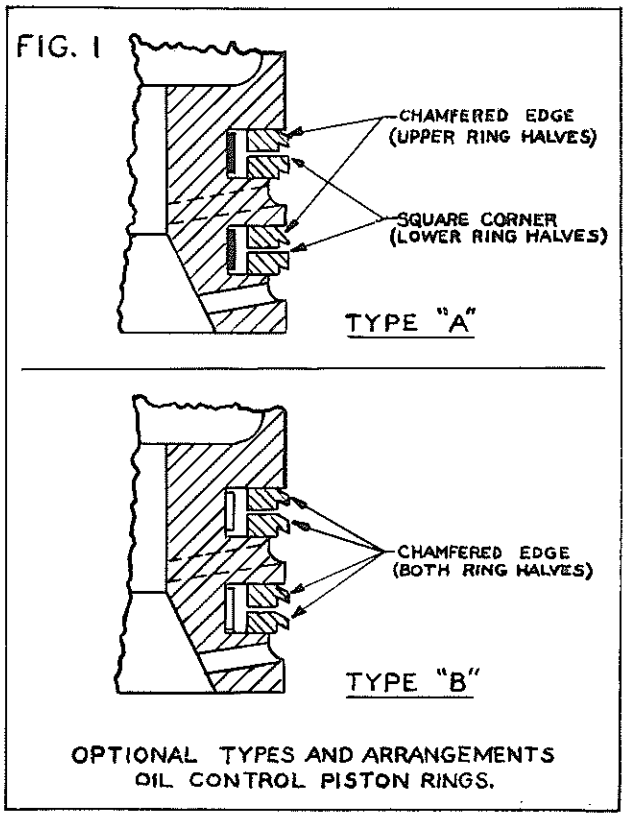

FIG. 7

G. REMOVAL OF CONNECTING ROD FROM PISTON

1. By means of a pair of small nose pliers, dislodge spring clip which retains steel cap at end of piston pin.

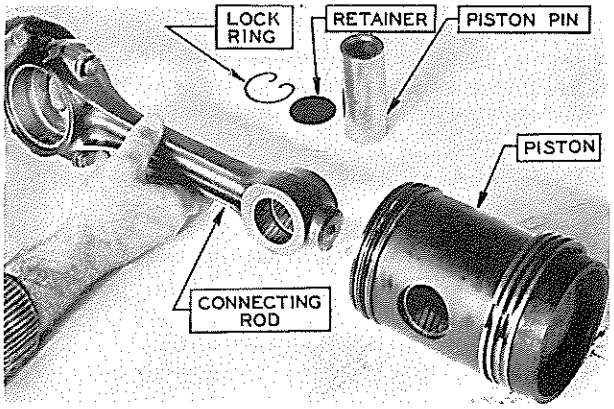

FIG. 8

2. Tap piston lightly on wood block and remove cap and pin. Should cap lodge in the groove for the spring clip, it may be readily removed with a rubber suction cup.

H. REMOVAL OF PISTON PIN BUSHINGS FROM PISTON — (SOLID BRONZE TYPE)

1. DESCRIPTION.
   The solid bronze type connecting rod bushing for service will be superseded by an improved split type steel-backed bronze bushing. A similar change will also apply to production, on both piston and connecting rod pin bushings.
   The new service replacement bushing (supplied for connecting rod only) may be identified by the protective bright cadmium plate coating. The service part numbers remain unchanged.
2. Place piston in V-block with piston pin hole in alignment with hole in block. Fig. 9.

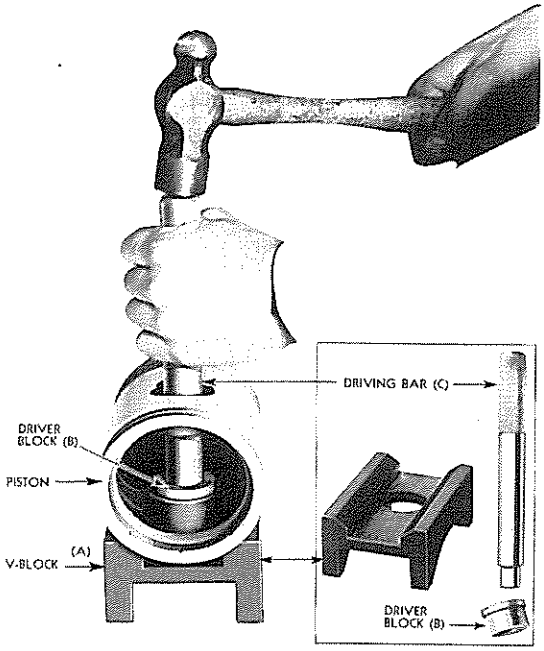

FIG. 9

3. Set small diameter of driver block (B) inside lower piston pin bushing.
4. Drive bushing from piston. Reverse piston and remove second bushing in same manner.

I. INSTALLATION OF PISTON PIN BUSHINGS IN PISTON

Bushings are installed in the piston with the same tool that was used for removal; except a stop plug is used in piston pin hole to

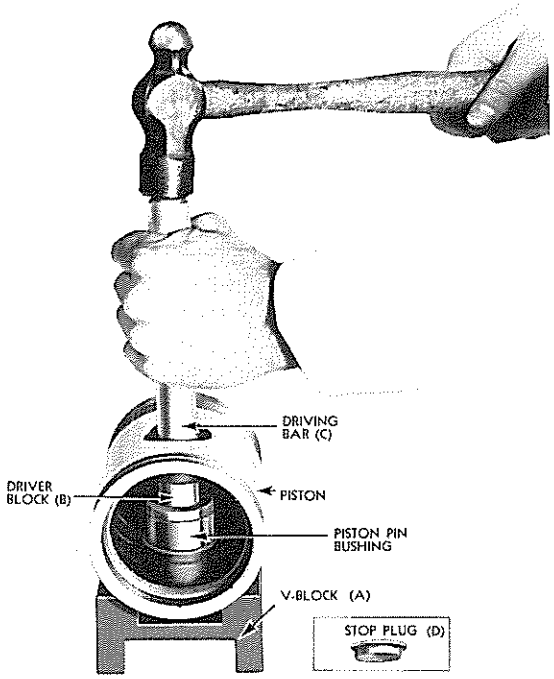

FIG. 10

locate the bushing correctly.

1. Lay stop plug (D) on V-block (A) with large diameter down and small diameter inserted in piston pin hole.
2. Start bushing in lower piston pin boss from inside piston, with small diameter of driver block (B) inside bushing and shoulder of large diameter resting on end of bushing. Fig. 10.
3. Drive bushing into boss until lower end rests on stop plug. Reverse piston and install second bushing in the same manner.

J. REAMING PISTON PIN BUSHINGS

After the bushings are pressed into the piston, they must be reamed to size. For satisfactory engine operation, the bushings must be line-reamed exactly parallel with center line of crankshaft and to the correct diameter of 1.5025″ + .0005″ — .0000″. The tool shown in Fig. 11 properly set up, will accomplish these results.

1. Insert small long diameter of arbor (A) into long bore of fixture from inner end so that short small diameter of arbor may enter bore in piston pin boss at outer end of bushing.

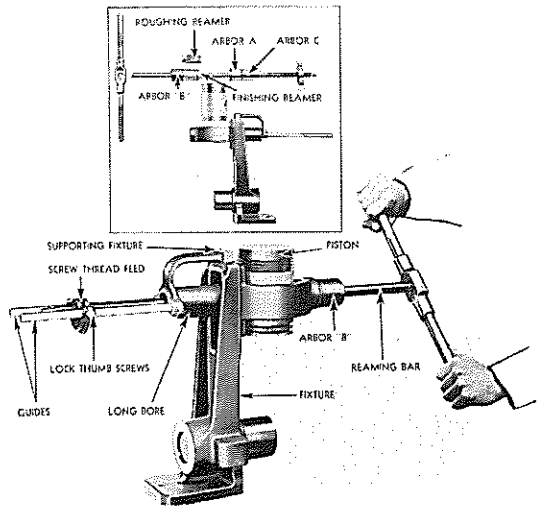

FIG. 11

2. Set piston in fixture right side up with bore in piston pin boss resting on exposed end of bore (A).
3. Slide arbor (C) into outer end of fixture and up against arbor (A).
4. Install roughing reamer onto reaming bar and slide through arbors (A and C) until outer end of reamer just contacts inner piston bushing.
5. Slide arbor (B) into inner end of fixture with small end of arbor entering bore for piston bushing.
6. Attach screw feed to threaded end of reaming bar and lock to guides of tool.
7. Turn reaming bar with handle and thread will feed reamer uniformly through bushing.
8. After rough reaming, carry out the same operations for finish reaming.
   NOTE: Always use roughing reamer for first cut and finishing reamer for last cut.
9. Lubricate a new piston pin with engine oil and try in newly reamed bushings. If work has been done properly, the pin will slip smoothly through bushings.

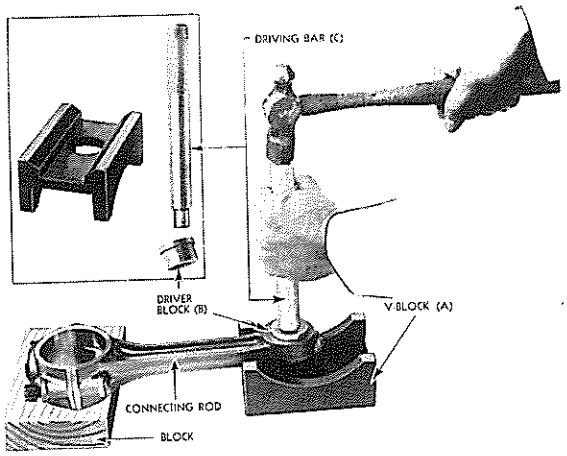

FIG. 12

K. INSTALLATION OF PISTON PIN BUSHINGS

1. Piston pin bushings are installed in the connecting rod with the same tool that was used for their removal. Fig. 10.
2. Each bushing is flush with outer edge of rod; this will leave an oil space of approximately $\frac{3}{16}$" between inner ends of bushings for passage of oil to the spray jet.

L. CONNECTING ROD BUSHINGS (SOLID BRONZE TYPE)

1. DESCRIPTION.
   The solid bronze type connecting rod bushing for service will be superseded by an improved split type steel backed bronze bushing. A similar change will also apply to production on both piston and connecting rod pin bushing.
   The new service replacement bushing (supplied for connecting rod only) may be identified by the protective bright cadmium plate coating. The service part number remains unchanged. There is .005" allowed for reaming after installed in rod. For removal of split type bushing refer to Topic 83-H.

M. ALIGN BUSHINGS FOR REAMING:

1. Remove connecting rod bearing cap and set lower end of rod over lower arbor. Install lower bearing cap sufficiently loose so rod may be moved sidewise.
2. With the aligning arbor inserted at piston pin bore, and taper tight in upper bushing at all times, slide lower end of rod tight against shoulder of fixture. Tighten bearing cap and withdraw aligning arbor.

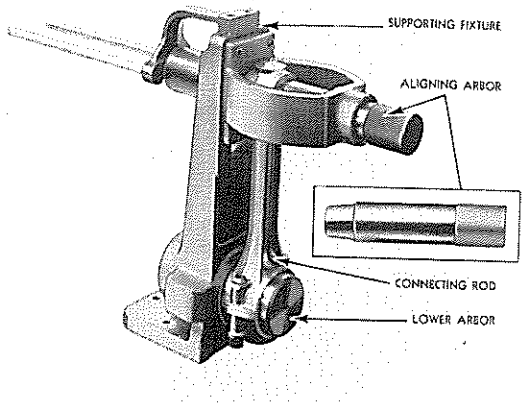

FIG. 13

N. REAMING CONNECTING ROD BUSHINGS:

To ream the connecting rod piston pin bushings, set tool up as shown in Fig. 13 and 14, refer to the following procedure as a guide

1. Slide arbor (C) into outer end of fixture.
2. Put roughing reamer over threaded end of reaming bar and push bar through arbor (C) so reamer just contacts connecting rod bushing.
3. Slide arbor (B) over inner end of reaming bar so outer diameter pilots into fixture.
4. Slide screw thread feed over guides of fixture and turn bar into threads of feed Lock screw feed onto guides with thumb screws.
5. Turn handle and reamer will feed through bushing uniformly.
6. Repeat the above operations with the finishing reamer.
   NOTE: Do not attempt to remove all the metal with the finishing reamer.

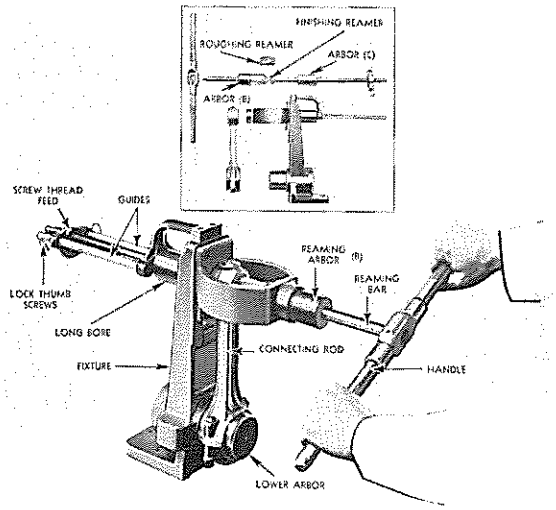

FIG. 14

7. Lubricate a new piston pin with engine non-corrosive oil and try in newly reamed bushings. If work has been done properly the pin will slip smoothly through bushings.

O. INSPECTION OF CONNECTING ROD PARTS

1. Before a connecting rod is replaced in the engine all parts should be washed clean and inspected.
2. If piston pin shows any appreciable wear install a new pin.

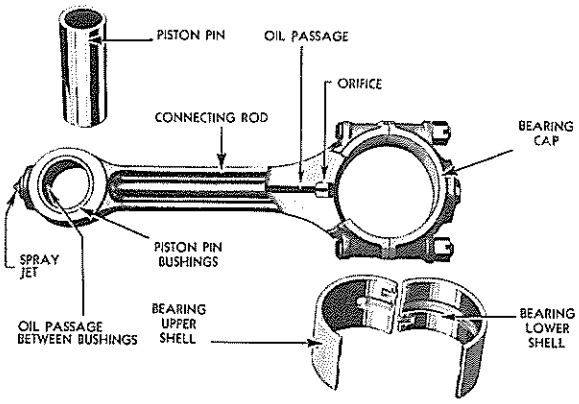

FIG. 15

3. Open orifice at lower end of rod and spray jet at upper end of connecting rod, and blow dry with compressed air through rifle drilling in rod.
4. The connecting rod bearing load is on the upper half of the shell only. Any wear will show on upper half of shell. The upper half of the shells should be examined for scoring, chipping, cracking, or signs of overheating. The backs of the bearing shells should also be in spected for any bright spots. Bright spots on the backs of the shells will indicate that the shells have been moving in their supports and are unfit for further use. If any of these conditions exist, a new upper half shell must be installed. If crankshaft journals are badly scored a new crankshaft should be installed, or ground undersize. See Topic 81-B.
5. The connecting rod bearing shells are furnished in standard sizes and .010, .020, .030 undersize.

P. ASSEMBLE CONNECTING ROD TO PISTON

NOTE: Before installing lock rings in pistons bend lock rings at ends where they contact center of pin retainer $\frac{1}{16}''$ or the thickness of the lock itself, to exert firm pressure on retainer. This procedure will effect a more perfect oil seal and prevent oil from escaping into air box through liner air ports.

1. Install one piston pin retainer and lock ring into either end of piston pin hole. Make sure lock ring enters groove in piston.
2. Place upper end of connecting rod between piston bosses in line with pin holes. Lubricate piston pin with clean engine oil, non-corrosive, and slide into position. NOTE: Pin should slip readily into position without forcing, if correctly fitted.
3. Install second piston pin retainer and lock ring at exposed end of pin.

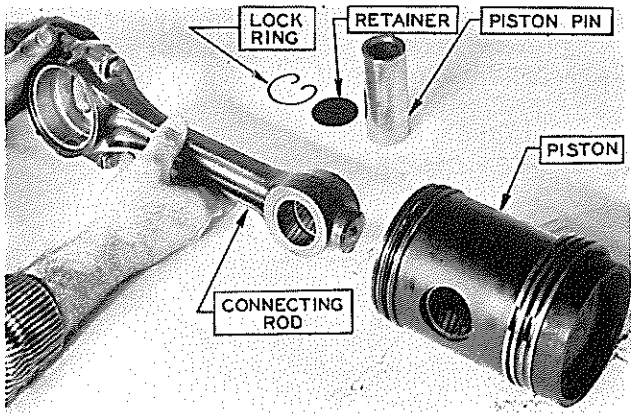

FIG. 16

Q. INSTALL PISTON AND CONNECTING ROD ASSEMBLY IN ENGINE

The lower end of each connecting rod, as well as the caps, are stamped on one side, 1, 2, 3, etc. These numbers identify the caps with the rods and show the particular cylinder with which each rod is used. These positions should always be maintained when rebuilding an engine; the marked side of the rod always faces the blower side of the cylinder block. The pistons are not marked and can be put on rod either way.

1. Stagger the piston ring gaps around the piston, apply some clean non-corrosive engine oil to piston and rings, then slide the piston ring compressor tool over the lower end of the piston skirt with flared end toward top of piston. Fig. 17. Turn the piston and rod assembly so that the identification mark on lower end of the connecting rod is toward the blower side of the cylinder block. By tapping on upper end of piston with a wood block, drive the piston in the cylinder bore.
2. Wipe clean and lubricate each connecting rod crankshaft journal. Install bearing shell with the one short groove at each parting line in the connecting rod and position rod onto crankshaft journal.
3. Heeding the marks on the bearing caps, install bearing shell with the one continuous groove from parting line to parting line into bearing cap, with lip of shell in groove of cap, and put cap and shell in place.

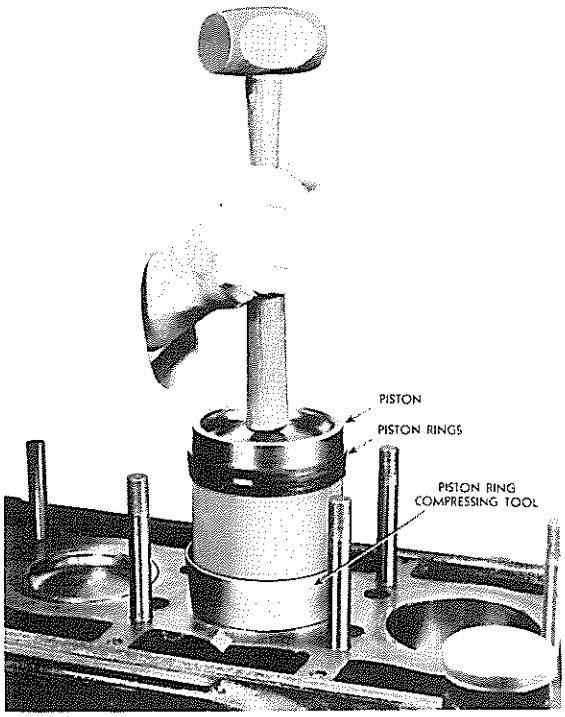

FIG. 17

4. Lock cap securely in place with bearing cap bolts and nuts and install cotter pins.
5. Install lubricating oil pump.
6. Install oil pan and fill to prescribed level. (2 on HD-14).
7. Install cylinder head.

R. REMOVAL OF PISTON PIN BUSHING (SPLIT TYPE)

1. DESCRIPTION. The solid bronze type connecting rod bushing for service will be superseded by an improved split type steel-backed bronze bushing. A similar change will also apply to production, on both piston and connecting rod pin bushing. The new service replacement bushing (supplied for connecting rod only) may be identified by the protective, bright, cadmium plate coating. The service part number remains unchanged. There is .005″ allowed for reaming after installed in rod. The new bushing assures a slightly tighter fit in the connecting rod and is interchangeable with the former part, providing the following service instructions are noted carefully.
2. SERVICE NOTE: The new piston pin connecting rod bushings should be installed with split of bushings at the top of the piston pin hole in rod. Also note that the split in the piston is opposite or downward.
3. REMOVE PISTON PIN BUSHINGS FROM CONNECTING ROD (SPLIT TYPE) If the bushings at the upper end of connecting rod need changing, they may be removed from the rod by using tool, as illustrated.
   Piston pin fit in rod is approximately .0025″ to .0032″ when new. Due to no reversal of load, bushings do not require replacement until clearance exceeds approximately .010″.
4. Support lower end of connecting rod on suitable wooden block and place upper end of rod on tool base so that bore in bushing align with hole in base.
5. Using hammer and driving bar to drive bushings from rod as shown in Fig. 12.

S. INSTALLATION OF PISTON PIN BUSHINGS (SPLIT TYPE)

1. The piston pin bushings are installed in the connecting rod with the same tool, that was used for their removal, as illustrated.
2. When installing split bushings in connecting rod, the split or joint should be at the top as shown in illustration.
3. When installing, drive each bushing in from the outside of the rod until outer end of bushing is flush with outer edge of rod; this will leave an oil space of approximately $\frac{3}{16}$″ between inner ends of bushings for passage of oil to spray jet.

T. REAMING PISTON PIN BUSHINGS IN CONNECTING ROD. (SPLIT TYPE)

Since the inside diameter of replacement bushings are smaller than the final finished diameter, the bushing must be reamed after they are pressed into place.

This operation is accomplished with tool as illustrated in Figs. 13 and 14. The first illustrates how the connecting rod is placed on the fixture preparatory to reaming. The second shows the actual reaming operation.

1. Place bore at lower end of rod over arbor on fixture and draw bearing cap up tight.
2. Slide bushing into rear guide boss of fixture with hollow end facing slot in fixture for upper end of connecting rod.
3. Rotate connecting rod into position for reaming so that upper end of rod rests on boss of tool bed.
4. Install bushing on reamer. Insert reamer into front guide boss and turn clockwise with uniform motion. Do not crowd reamer too hard, as better results will be obtained by moderate pressures when turning.
5. After reaming, inspect bearing surfaces in bushings. Use a light coating of prussian blue, and slide a standard piston pin through the bushing to check for clearance. If bearings are good, and clearances are satisfactory, parts may be lubricated and the connecting rod attached to the piston as described in Topic 83-P.
   NOTE: Piston pin fit in rod is approximately .0025″ to .0032″ when new. Due to no reversal of load, bushings do not require replacement until clearance exceeds approximately .010″ If bushings have been exceptionally overheated, due to piston failure, new bushings should be installed. Loose bushings may creep together thus blocking the supply of cooling oil to the piston.

84 -- Cylinder Liners

DESCRIPTION—Replaceable cylinder liners, made of hardened alloy cast-iron and accurately honed to a very smooth finish, are machined to form a loose fit in the cylinder block. Because of this feature, the liners are easily removed and installed.

A flange at the top of the liner fits into a recess in the cylinder block, insuring proper positioning in the block. Even temperature and minimum distortion are insured by water cooling each liner over its entire length, except at the ports, which are cooled by the scavenging air. To permit introduction of fresh air into the cylinder, sixty-four $\frac{5}{16}$" ports are drilled into the circumference of each cylinder liner. These ports are arranged in two rows—32 to each row —and are equally spaced and staggered.

FIG. 1

A. REMOVAL

Cylinder liners can be removed and installed with the motor either in or out of the tractor.

NOTE: LOOSE FIT LINERS: In engines 3711147—"HD 7"), (4712187—"HD 10"), (6712455—"HD 14") and above.

1. Remove the pre-cleaners and hood.
2. Remove the cylinder head. Refer to Topic 78-A.
3. Drain the oil from the crankcase.
4. Remove the engine support bottom cover.
5. Remove the oil pan. (On HD 14, 2 pans). NOTE: On the 6-cylinder motors the lower pan will have to be taken off first, then the lower oil screen cover and screen. The upper oil pan can now be removed.
6. Remove the oil pump if the cylinder liner to be installed, is over the pump.
7. Remove the connecting rod cap and push the piston out the top.

   NOTE: Before attempting to remove the piston from the cylinder liner scrape the carbon from the upper, inner circumference of the liner.

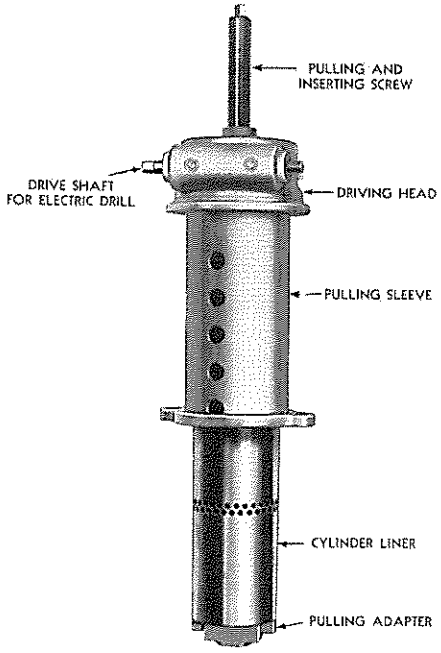

FIG. 2

8. Since the cylinder liners are a loose fit they may be removed easily from the top of the cylinder block by hand after loosening with the tool shown in Fig. 3. A study of Fig. 2 will show how to set up and use the cylinder liner puller tool.

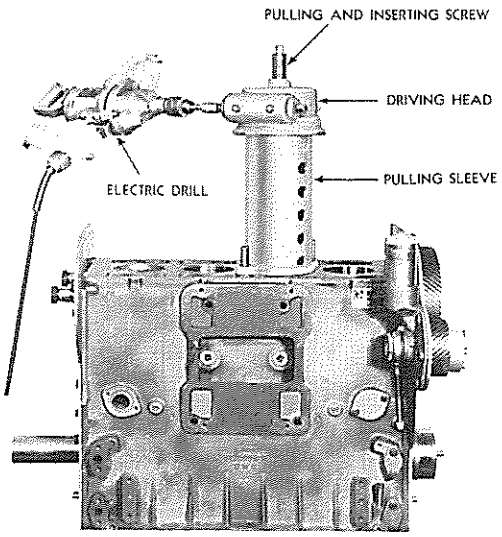

FIG. 3

The same screw and driving head of the tool is used for pulling and installing the cylinder liner. For pulling the liner the short adapter, which seats on the lower edge of the liner, is used in the lower end of the screw and the long, hollow adapter is used between the screw head and the cylinder block. As the liner is pulled from the cylinder block it follows up inside the upper hollow adapter.

NOTE: PRESS FIT LINERS:
Press fit liners have to be removed all the way from the cylinder block with the set-up as in Fig. 3.

B. INSTALLATION (LOOSE FIT)

1. To install a loose fit cylinder liner, wipe outside of liner and bore in cylinder block clean; then push the liner in by hand. When in place the top face of the liner upper flange will be from .002" to .004" above the top surface of the cylinder block.

C. INSTALLATION (PRESS FIT)

1. Reverse the removal process to install the cylinder liners except that a different adapter must be used.
   NOTE: The cylinder liners for a press fit and for a loose fit are identical; the bore in the block is different.

D. CYLINDER LINER AIR PORT CARBON REMOVAL

1. Remove Blower Assembly. Refer to Topic 79-A.
2. Remove cylinder head assembly. Refer to Topic 78-A.

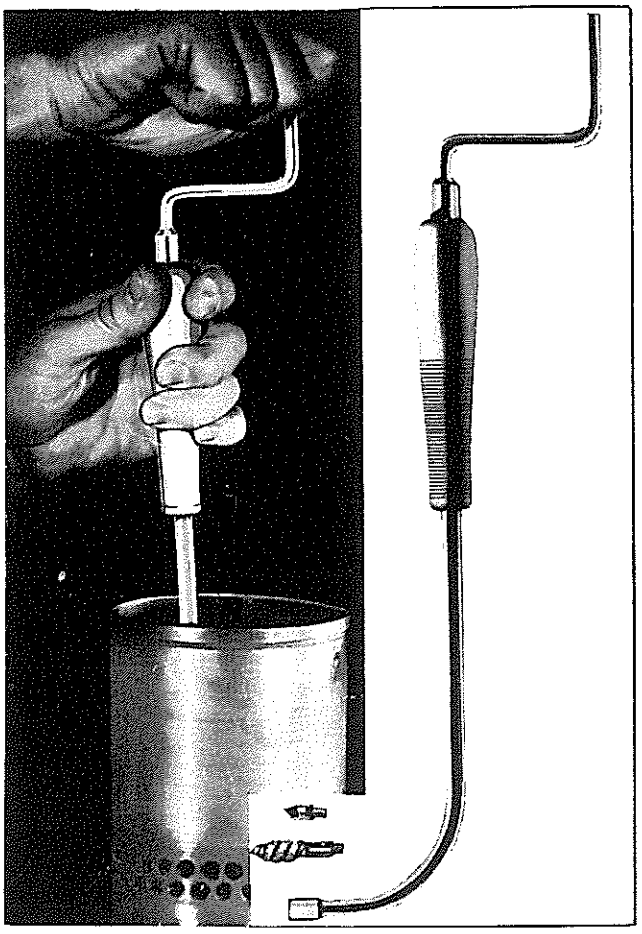

FIG. 4

3. Remove Generator.
4. Remove secondary oil filter assembly only on HD 7.
5. Remove air heater assembly.
6. Remove hand hole covers.
7. Liner air ports can now be cleaned using tool shown in Fig. 4.
8. Removing carbon from the cylinder liner port holes is normally done with cylinder liner in the block (not with liner out, as illustrated in operation view). First lower piston to its extreme position, insert tool with carbon removing reamer attached in port hole and turn operating handle which rotates the reamer and cuts its way through the carbon-plugged port hole. Continue this until all port holes have been reamed. Remove reamer, replace with cleaning brush and give each port hole a final cleaning.
   BE SURE TO BLOW ALL LOOSE CARBON AWAY FROM TOP OF PISTON AND CLEAN CARBON FROM AIR BOX BEFORE REASSEMBLING MOTOR.
   IMPORTANT: Air box drain tube must be kept open.

85 -- Cylinder Block

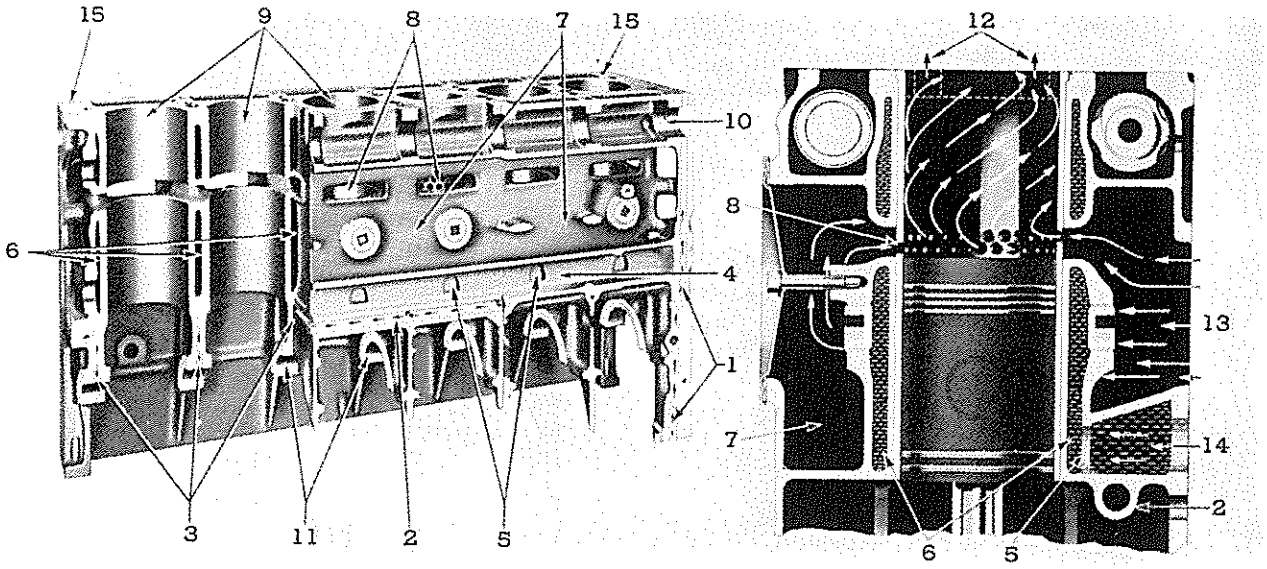

1. Vertical Oil Passage.
2. Oil Gallery.
3. Oil Passage to Crankshaft.
4. Cooling Liquid Manifold.
5. Cooling Liquid Inlet Opening to Liner Jacket.
6. Liner Cooling Jacket.
7. Air Box.
8. Air Passages to Cylinder.
9. Bore for Cylinder Liner.
10. Bore for Cam or Balance Shaft.
11. Upper Half of Main Bearing Seat.
12. Water to Cylinder Head.
13. Air from Blower.
14. Water from Pump.
15. Plugged Holes Each Corner.

FIG. 1

Description—The cylinder block and crankcase, which is the main structural part of the engine, is a box-like, one-piece casting made of alloy cast iron. Rugged transverse members, cast integral, provide utmost rigidity and strength, insuring perfect alignment of bores and bearings under all loads. The cylinders are bored to receive the cylinder liners, into the circumference of which a number of air inlet ports are drilled. The water jackets extend the full length of the bores and are divided into upper and lower sections, which are connected by hollow struts. Cooling water enters at the bottom of the water jacket from the water pump, and leaves the jacket at the top through holes which register with corresponding openings in the cylinder head. Surrounding the water space is an air chamber, which conducts the air from the blower to all of the inlet ports.

A camshaft and a balance weight shaft are located on opposite sides of the cylinder block and near the top. The upper halves of the main bearing seats are cast integral with the block. Drilled passages in the block carry lubricating oil to all moving parts and eliminate piping. Hand-hole plates on the side opposite to the blower permit access to the air chamber, and inspection of pistons and rings through the intake ports in the cylinder walls. Two hand-hole plates on the blower side serve the same purpose. Cylinder blocks for service are furnished with mainbearing caps, studs, and the necessary plugs. Cylinder liners, due to loose fit, are serviced separately.

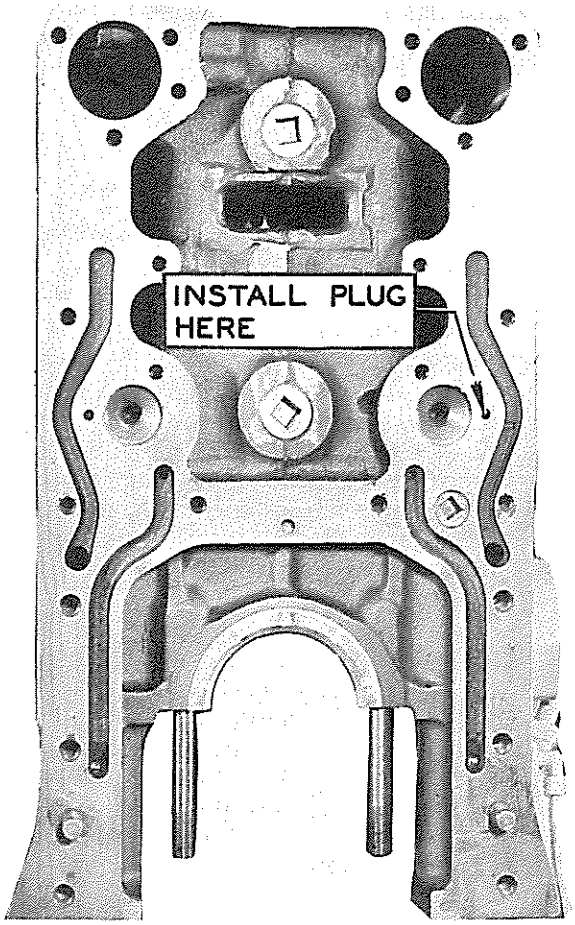

FIG. 2

A. CYLINDER BLOCK; IDLER GEAR OIL HOLES

1. To improve the oil seal at front and rear of cylinder blocks, special brass plugs ¼" dia. x 5/16", Part No. 5154319, are now installed in the oil holes of the two idler gear bosses at the front of the engine as well as in the oil hole of the idler gear boss at rear of engine, not used for the idler gear. This was effective starting with engine serial numbers 371833, 4711183 and 6177462.
2. The boss used for the idler gear, which of course is NOT plugged ,is always in the left-side of rear face for all Models.
3. The idler gear oil hole plugs may be installed in service, on engines built prior to serial numbers shown above. This can conveniently be done when engines are disassembled for inspection or overhaul.
4. To install idler gear oil hole plugs proceed as follows:
   a. Remove front and rear cylinder block end plates.
   b. Install a plug in both idler gear boss oil holes at front end of cylinder block.
   c. At rear end of cylinder block (gear train end) install a plug in the oil hole of the idler gear boss opposite that to which the idler gear hub is assembled. (Right hand side)

NOTE: Top of plugs must be below surface of cylinder block when installed. If the plugs project from the surface of the block, the end plates will be warped when attached to the block.

Cylinder block assembly replacements for service will have these plugs included in shipment as loose parts.

B. AIR BOX DRAIN TUBE

1. An improved air box drain tube became effective on Tractors HD-14, 1405, HD-10, 1711 and HD-7, 1343, to eliminate difficulty experienced in the field with air box drains clogging.
2. The improved air box drain tube may be installed on engines in the field by drilling and tapping air box as shown in Fig. 3.

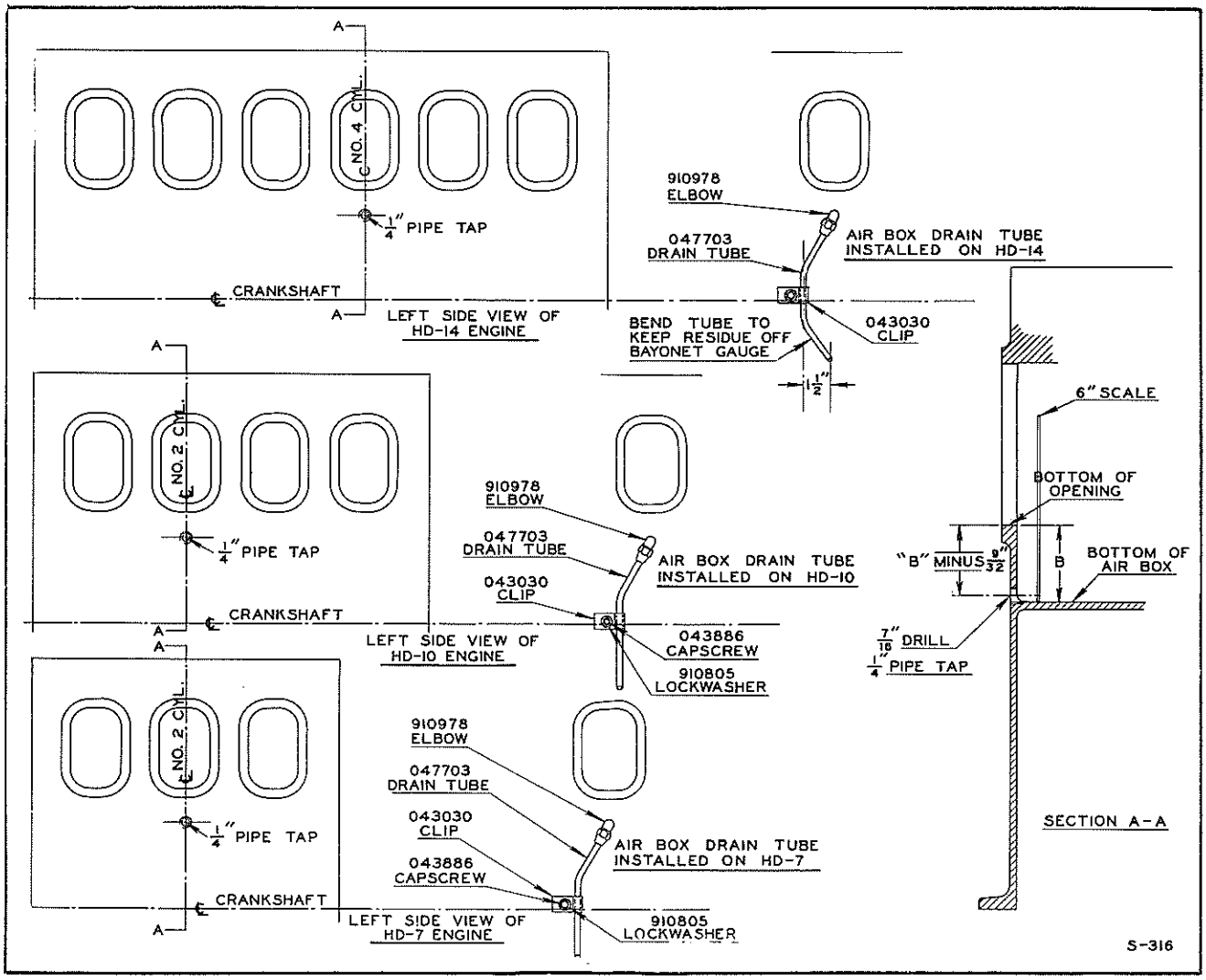

FIG. 3

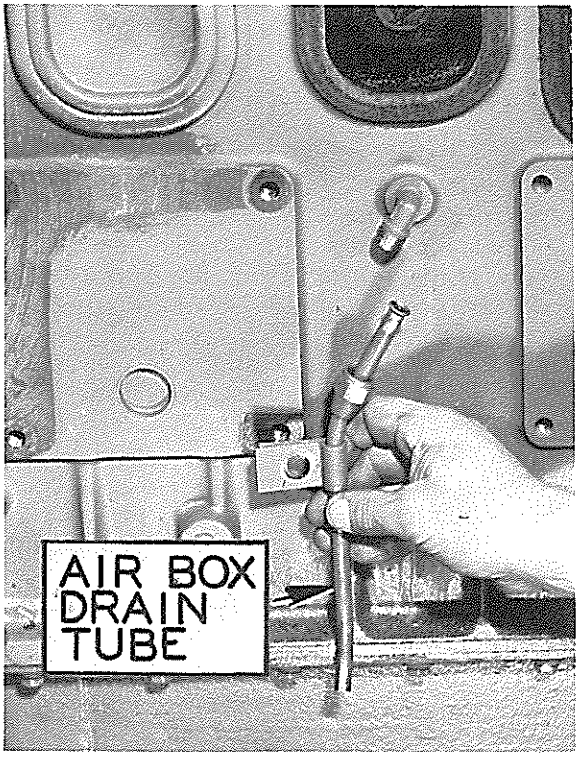

FIG. 4

3. The improved drain tube should be installed if possible.
4. It is very important that a careful measurement be made to locate the hole. Use a 6″ scale as shown on sketch and measure from bottom of air box to bottom of hand hole—dimension B. Make sure scale does not rest on curvature of casting or on sludge particles which may be on bottom of air box. If dimension B is not correct, the hole will not be located to properly drain air box. To locate center of new drain hole use dimension B minus 9/32″ and measure down on outside from bottom of hand hole.

   CAUTION: Care should be used when locating center of hole to be drilled as there is danger of drilling into bottom of air box. The correct measurement is, B minus 9/32″. Measurement B will vary on different engine blocks so it will be necessary to measure on each engine to locate the drain hole.
5. To drill hole in air box on the HD-10 and HD-14, it will be necessary to remove the left front fender. Use a ratchet drill or weld an extension on a $\frac{7}{16}$″ drill to make the drill about 14 inches long so that it will clear the motor support and allow an electric drill or a breast drill to be used. With the extension drill you will find that the drill will have to be slanted downward slightly to reach the spot marked on the block. This will cause the hole to angle downward but by exercising special care when tapping, the hole can be tapped horizontally.
6. To drill the hole in the air box on the HD-7 it will be necessary to remove the left front fender. The block is then readily accessible and no special tools will be necessary. It is suggested that a small pilot drill be used first, then a $\frac{7}{16}$″ drill. Cut threads in hole with a ¼″ pipe tap. Do not run tap in too far at first. Use tap and then try #910978 elbow. A desirable fit is obtained when elbow is in proper position and tight in hole with threads just extending through wall of cylinder block. If the threads are cut too deep in hole, #910978 elbow will go in too far and there will not be enough clearance between elbow and block to start nut on air box drain tube assembly. After elbow is installed, connect drain tube to elbow and clip tube to block using #043030 Clip and capscrew as shown in sketch.
7. The #047703 Drain Tube Assembly is used on all three model engines. On the "HD-14", install and clip tube as stated then bend tube as shown to prevent air box residue from blowing on bayonet gauge.
8. When improved air box drain tube is installed, original drain tubes should be removed and ⅛″ pipe plugs installed. Otherwise collapse old drain tubes so they will be closed.
9. For installation on tractors below the effective serial numbers, order 1—047703 Drain Tube, 1—910978 elbow, 1—043030 Clip, 1 Capscrew #043886 and 1 lockwasher 910805 for "HD-10" and "HD-7". Order same for "HD-14" but omit capscrew and lockwasher.

C. CLEAN CYLINDER BLOCK, OIL AND WATER PASSAGES

1. The motor must be completely dismantled. Refer to Topic 73-A.
2. To clean the oil passages, remove the various plugs in passages.
3. These passages can now be cleaned by high steam pressure with a solvent used in the water, to cut the sludge and foreign material that has collected.
4. After cleaning with solvent is finished, solvent must be flushed out with clean water under pressure. Make sure when replacing plugs that they are white leaded and put in their respective places.
5. To clean the water jacket of block remove the brass plugs around the water jacket. High pressure steam and water can be applied through these openings; place the block in various positions while this is being done so that the loose scale may be washed out.

6. After the cleaning is complete, replace the plugs with white lead and tighten securely.

D. CYLINDER HEAD OIL GASKET LEAKS

1. When cylinder head gaskets are replaced the cup plugs in the four corners of the cylinder block should be inspected for tightness. In case plugs are loose a recommended procedure is to drive the plug deeper in the hole and assemble a second plug, coating same with "Aviation Prematex", "Casola", or equivalent to provide a permanent seal. This will avoid any possibility of leakage at these points. Refer to Fig. 5.
2. Plugs may be purchased under the following part number: 5151122.
3. Hone cylinder block for loose liner that previously used pressed in liner.

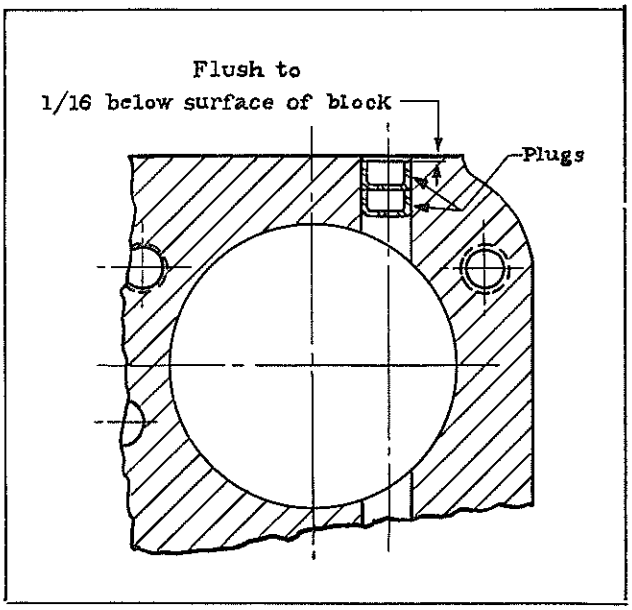

FIG. 5

86 -- Camshaft and Balance Shaft

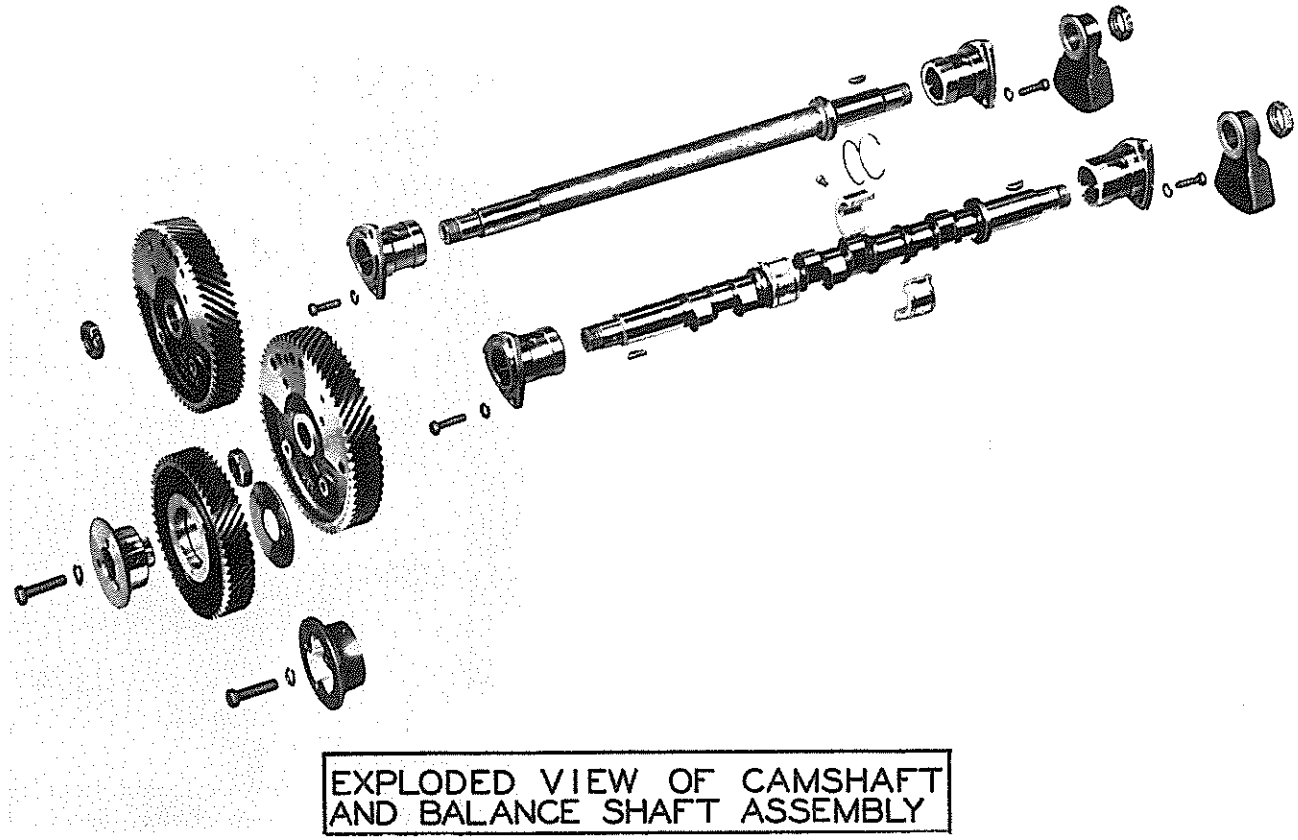

FIG. 1

DESCRIPTION. The camshaft is a one-piece drop-forging, case hardened at cams and journals, and is located in top of cylinder block. A one-piece bearing cage at each end, and intermediate bearings between each set of cams, provide a rigid support. The two halves of each intermediate bearing are held together by two spring retainers and the complete bearing is locked into place by a shouldered set screw in top of cylinder block. The bearing at front end of camshaft absorbs the drive thrust.

The cams are ground with parallel surfaces to promote efficient, quiet roller action, and are heat-treated to provide a hard wearing surface on working portion of cams.

The balance shaft runs parallel to the camshaft in top of cylinder block. The balance shaft, like the camshaft, is supported by a one-piece bearing cage at each end but has no intermediate bearings. In addition to the counterweighted gears at rear end, balance weights are used at the front end of both the balance shaft and camshaft. The front end balance weights are different for the three, four and six cylinder engines in that the weights are lightest for the three cylinder, somewhat heavier for the six cylinder and still heavier for the four cylinder.

The camshaft and balance shaft end bearings are lubricated from four vertical oil passages in the cylinder block which communicate with the main oil gallery. The camshaft intermediate bearings are lubricated by oil from the hollow camshaft.

A. REMOVAL

1. Remove motor from tractor, refer to Topics 74, 75 and 76 for removal instructions.
2. Remove clutch and flywheel.
3. Remove cylinder head and flywheel housing.
4. Remove front balance weight cover.
5. To prevent gears from rotating, roll a clean rag into the teeth of the timing gears. Straighten the tongues on lockwashers, and loosen retaining nuts on each end of both the balance shaft and camshaft. Remove nuts.
6. Withdraw the balance weights from balance shaft and camshaft. A slight pry will remove the weights.
7. Back out the special fillister head lock screws from top of cylinder block at each camshaft intermediate bearing.
8. Remove 3 capscrews from each rear end balance shaft and camshaft bearing cage, by means of a socket wrench inserted through a hole in the web of timing gears.
9. Withdraw both the balance shaft and camshaft timing gears and bearing assemblies from rear end of cylinder block.

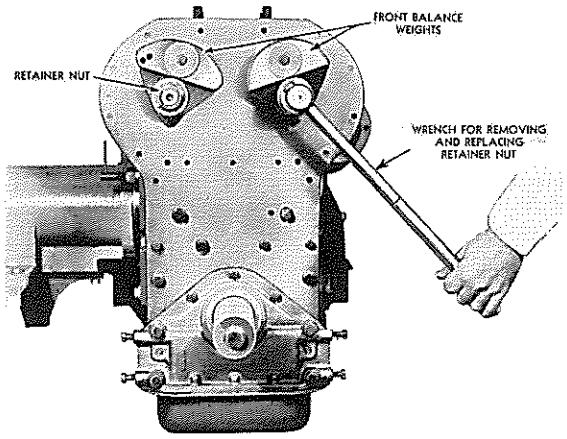

FIG. 2

10. Remove the 3 capscrews from each bearing cage at the front end of the balance shaft and camshaft; remove the cages from the engine block front end plate.

B. REMOVAL OF PARTS FROM CAMSHAFT AND BALANCE SHAFT

1. The gears may be removed from both the camshaft and balance shaft by supporting the shaft and gear assembly in an arbor press and pushing the shaft through the gear, as shown in Fig. 3.

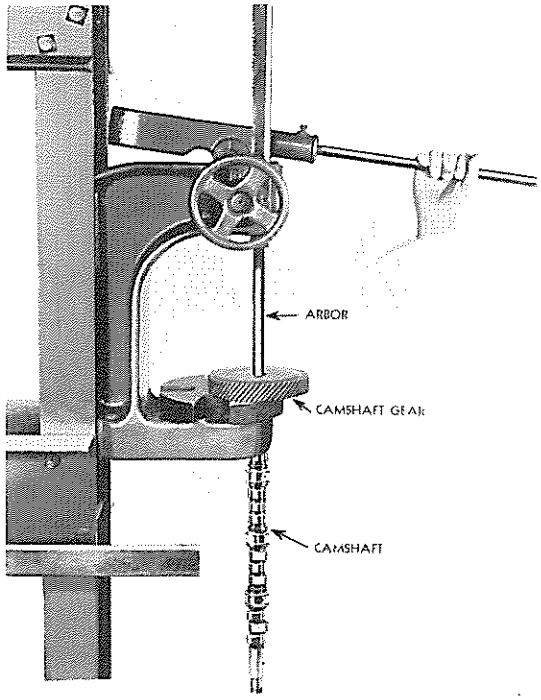

FIG. 3

2. After gears are removed, end bearings may be removed from shafts.
3. Remove spring retainers from camshaft intermediate bearings and remove the 2 halves of each bearing.

C. INSPECTION

After all parts have been cleaned and dried

with compressed air, inspect all bearings and journals for good bearing surfaces and wear before installing the parts.

Radial clearance on camshaft and balance shaft bearings is from .0015" to .003" and should not exceed .005". End clearance for these same bearings is from .002" to .005" and should not exceed .010".

Should any of the bearings show scoring or be worn so clearances exceed limits given above, install new bearings. Examine cam surfaces for wear or scoring. If cams are scored install a new shaft.

Oil is fed through the hollow camshaft to its intermediate bearings; therefore, all oil holes should be examined in the shaft and in the bearings. Sludge accumulations, might restrict the oil flow, and should be removed.

D. INSTALL PARTS ON CAMSHAFT AND BALANCE SHAFT

Parts shown below should be assembled on camshaft and balance shaft before they are installed in cylinder block.

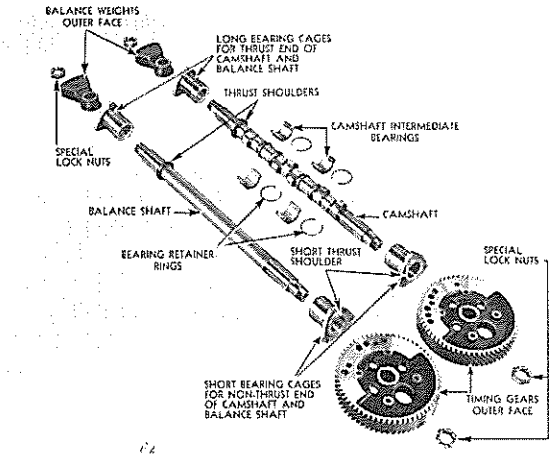

FIG. 4

Note that the teeth on one timing gear form a right-hand helix, and on the other, a left-hand helix. When viewing engine from rear, the gear with right-hand helical teeth is located on left side and vice versa for right side.

The camshaft and balance shaft gears are the same for all engines; but weights are attached to these gears on the 4 and 6 cylinder engines for balancing purposes. No weights are attached to the gears on the 3 cylinder engine. Camshaft and balance shaft gears from a 3 cylinder engine may be used on the 4 or 6 cylinder engines, if the specified weights are attached; the gears from either a 4 or 6 cylinder engine may be used on a 3 cylinder engine, if the weights are removed from the gears.

1. With end bearings located on shaft, place Woodruff keys in shafts and press the timing gears on the camshaft and balance shaft.
2. Start nuts on each shaft.
3. Install the intermediate bearings in place on camshaft and lock the 2 halves together with 2 spring retainers on each bearing.

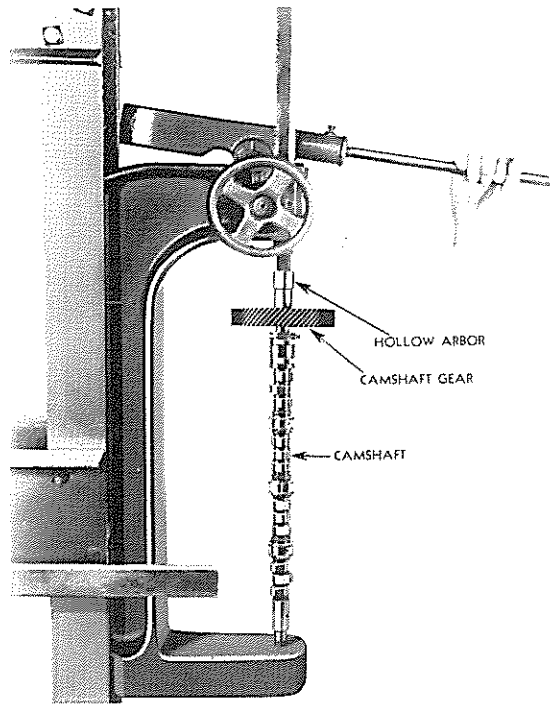

FIG. 5

THRUST BEARING ASSEMBLY "SECOND TYPE"

The first type camshaft and balance thrust bearing was a one piece assembly with plated thrust surfaces integral with the bearing cage as shown in Fig. 6. The second type became effective with engine serial numbers 3714702, 4716608 and 67116791. The intergral thrust surfaces of the first type are replaced by steel-backed bronze, washer type bearings which are separate and loose from the bearing cage. These are assembled at each end of the bearing, as shown in Fig. 7, with the bronze surfaces facing outward. Only the second type Bearing Assembly will be supplied for all service.

1. The second type camshaft and balance shaft thrust bearing is interchangeable with the first type part. However, the thrust washers are loose, and must be assembled to the cage before the bearings are installed. The thrust washers cannot be used with the first type bearing.
2. The second type cam and balance shaft bearing assembly which includes thrust washers is carried under part number 5159559. The cam and balance shaft

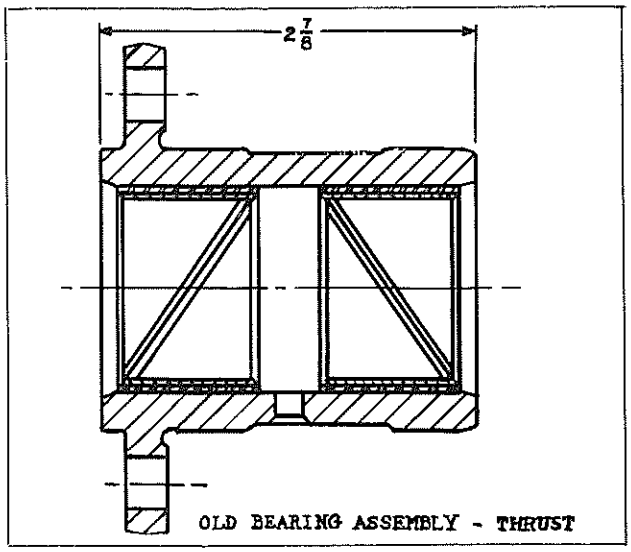

FIG. 6

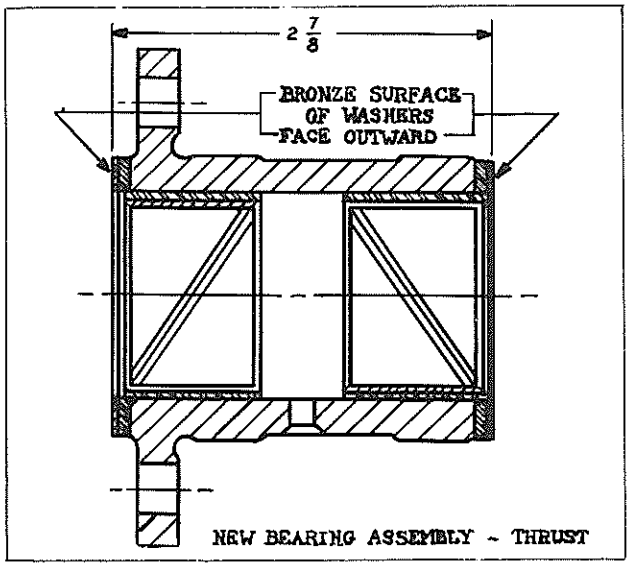

FIG. 7

thrust washer is carried under part number 5158917. The second type bearing assembly will only be serviced complete with thrust washer. Replacement thrust washers may be purchased separately.

3. When engines are disassembled for the first time it will be noted that the balance shaft thrust bearing is assembled at the front end of the engine, the same as the camshaft thrust bearing. This is followed in production to facilitate new engine assembly. It is not an absolute requirement that the balance shaft thrust bearing be installed in the front end of the engine as this bearing may be installed in the front or rear of the engine, whichever is most convenient.
   NOTE:: THE CAMSHAFT THRUST BEARING MUST BE INSTALLED IN THE FRONT END OF THE ENGINE.
4. Thrust bearings are distinguished from plain bearings by the presence of oil grooves in the bushings.
5. To install new thrust bearing assemblies proceed as follows:
   a. Apply some heavy cup grease to the steel faces of the thrust washers and then place one of these washers against each end of the bearing. (Be sure the steel faces are next to the bearing ends.)
   b. Lubricate shaft journals. Install the bearing assembly on the shaft journal with bolting flange of bearing toward outer end of shaft. BE CAREFUL NOT TO DISLODGE LOOSE WASHERS ON END OF BEARING WHEN PLACING THE THRUST BEARING ON SHAFT.

E. INSTALLATION OF CAMSHAFT AND BALANCE SHAFT

The necessary parts, as shown, having been attached to camshaft and balance shaft, these assemblies may be installed in cylinder block as follows:

1. Install end bearing for front end of camshaft and balance shaft in engine block front end plate, and secure in place with lockwashers and capscrews.
2. Start camshaft, bearing and gear assembly into position at rear end of block on the side of cylinder block opposite exhaust manifold and slide into place.
   The idler gear will be on the side of engine opposite camshaft and the positioning of timing marks will take place when the balance shaft is installed in position.
3. Secure bearing cage for rear camshaft bearing to engine block rear end plate with 3 lockwashers and capscrews. These capscrews are accessible through the hole in timing gears.
4. Revolve the camshaft intermediate bearing so locking holes in bearing align with holes in top of cylinder block, and install lock screws.
5. With Woodruff key in place, slide the balance weight on front end of camshaft, with the overhanging section of the weight facing away from engine block.
6. With the exception that the balance shaft has no intermediate bearings, the procedure for installing this shaft in cylinder block is the same as that followed in installing the camshaft. The timing marks "O" on the camshaft and balance shaft gears must face each other. Topic 80, Fig. 1. Viewing engine from rear the idler gear is located on the left side of cylinder block, and the marking "R" which appears on crankshaft gear must face one of the "R" marks on the idler gear. The other "R" mark on idler

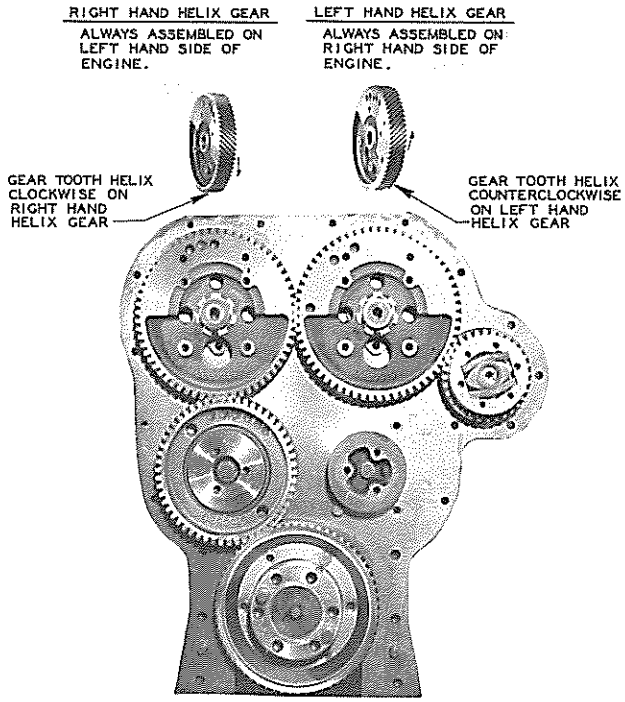

ENGINE VIEWED FROM REAR

FIG. 8

gear must face the "R" mark on the balance shaft gear.

7. The camshaft and balance shaft both having been installed, wedge a clean cloth between the teeth of the timing gears and draw nuts as tight as possible with a 16" wrench and lock them in place.

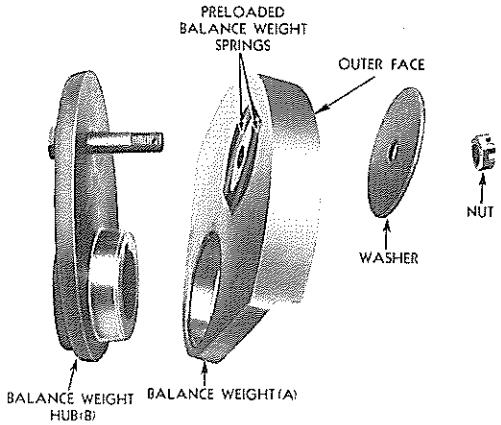

FIG. 9

8. On the 6 cylinder engine, the balance weights "A" articulate on the balance weight hubs "B". Fig. 10. After the balance weight assemblies are locked in place on the shaft a clearance of .008" should be maintained between the weights "A" and the hubs "B". If clearance does not exist as shown, the weights will not articulate on the hubs and the engine might be "rough".

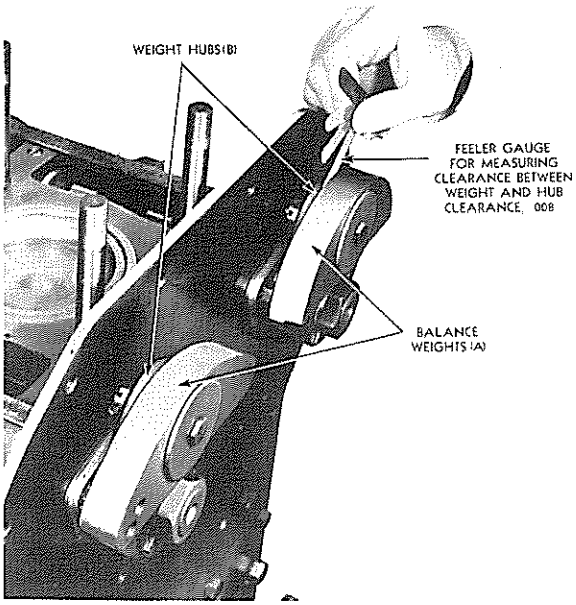

FIG. 10

NOTE: Solid balance weights are used on the 3 and 4 cylinder engines; these weights are simply keyed and locked to the shaft with special lock nuts. The front end balance weights are different for the three, four and six cylinder engines, the weights are lightest for the three cylinder, somewhat heavier for the six cylinder and still heavier for the four cylinder engine.

F. REASSEMBLY OF MOTOR

Reverse the removal process for installing the flywheel housing, flywheel, etc.

87 -- Gear Train Cover and Flywheel Housing

A. REMOVAL OF GEAR TRAIN COVER AND FLYWHEEL HOUSING

1. Remove the motor from the tractor as directed in Topics 74, 75 and 76, "Motor Removal."
2. Remove the clutch from the flywheel and remove the flywheel.
3. Remove the capscrews and bolts holding the housing to the rear cylinder block end plate and rear lifter bracket; also remove the capscrews in the rear of the oil pan where it fastens to the

housing. Loosen all capscrews in oil pan. Now remove the housing.

NOTE: REVISED FLYWHEEL HOUSING GASKETS

The flywheel housing large and small gaskets have been reduced in thickness from the former 1/32 to 1/64.

INTERCHANGEABILITY: Is affected. Both large and small gaskets of the new thickness must be used together when replacements are necessary. Therefore, a new service gasket set is provided under part number 5150025 which includes the necessary gaskets to affect a complete changeover to new design.

B. INSPECTION

The purpose of removing the housing alone is to replace the rear oil seal and inspect housing for cracks.

C. INSTALLATION OF GEAR TRAIN COVER AND FLYWHEEL HOUSING

1. Soak the new oil seal in motor oil for at least 30 min. before installing. Drive the old oil seal out. Shellac flywheel housing before pressing new seal into place.
2. Place the oil seal assembly tool on the two dowel pins in flywheel end of crankshaft, and install flywheel housing as shown. Care must be taken when placing housing over the seal tool, that the edge of seal does not catch on edge of assembly tool. This can be very easily overlooked and will ruin seal. Install bolts in housing, and tighten capscrews in oil pan.
3. Remove special tool.
4. Install flywheel and clutch.
5. Install motor in the tractor reversing removal procedure.

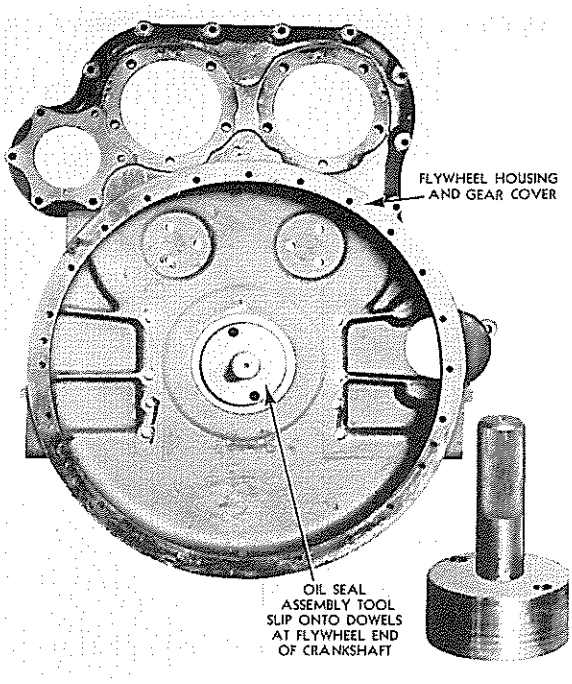

FIG. 1

88 -- Flywheel

A. REMOVAL OF FLYWHEEL

1. Remove motor from tractor as directed in Topics 74, 75 and 76.
2. Remove clutch from flywheel.
3. Remove the 6 capscrews holding the flywheel to the crankshaft.
4. There are two 7/16" N. C. threaded holes in the flywheel to facilitate removal. Screw two 7/16" N. C. capscrews into these holes, pushing the flywheel off the crankshaft hub.

B. INSPECTION OF PARTS

1. If a new starter ring gear is to be installed on the flywheel, remove the old ring by grinding a notch through, at the root of a tooth.
2. To install the ring gear; heat the gear uniformly to 450° F. (red heat, visible only in the dark) and place it in position on the flywheel which is at room temperature.

NOTE: The ring gear should not be over-

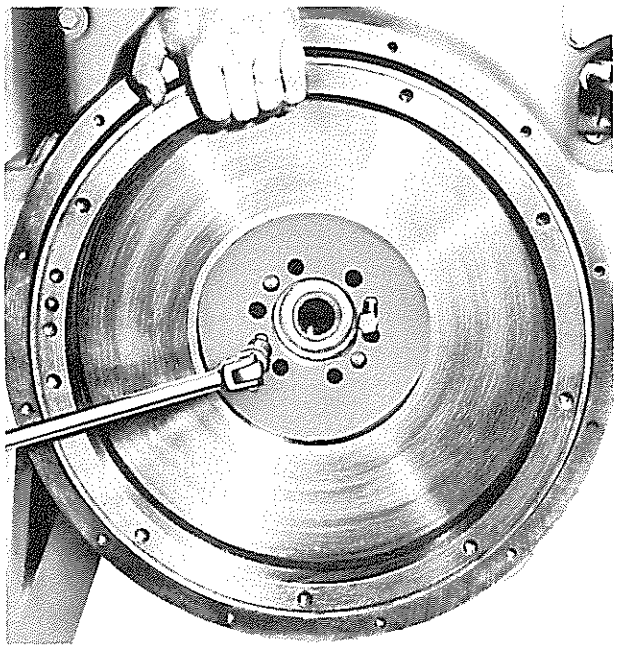

FIG. 1

heated as the original heat treatment will be destroyed.

C. INSTALLATION OF FLYWHEEL

1. Install the flywheel on the crankshaft hub.
   NOTE: The capscrew holes in the crankshaft are irregularly spaced so the flywheel cannot be installed incorrectly. After capscrews are installed, lock with wire.
2. Install the clutch and install the motor in the tractor. See Topics 74, 75 and 76, "Motor Installation."

89 -- Lubricating Oil Pump

A. REMOVAL OF OIL PUMP

3 AND 4 CYLINDER ENGINES

1. Remove engine support bottom cover.
2. Drain oil from crankcase.
3. Remove the oil pan.
4. Remove the oil pump outlet pipe, oil pump inlet bracket, and the 2 nuts holding pump to the main bearing cap. The pump can now be removed by sliding it back so the oil pump drive gear shaft disengages the oil pump drive sleeve. Watch for shims between pump assembly and main bearing caps, they are used to obtain proper tension on drive chain, some engines do not require shims.
5. Remove the oil pump by-pass valve assembly.

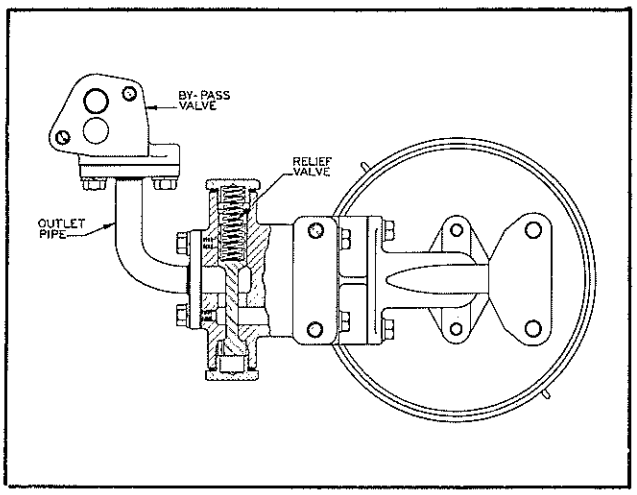

FIG. 1

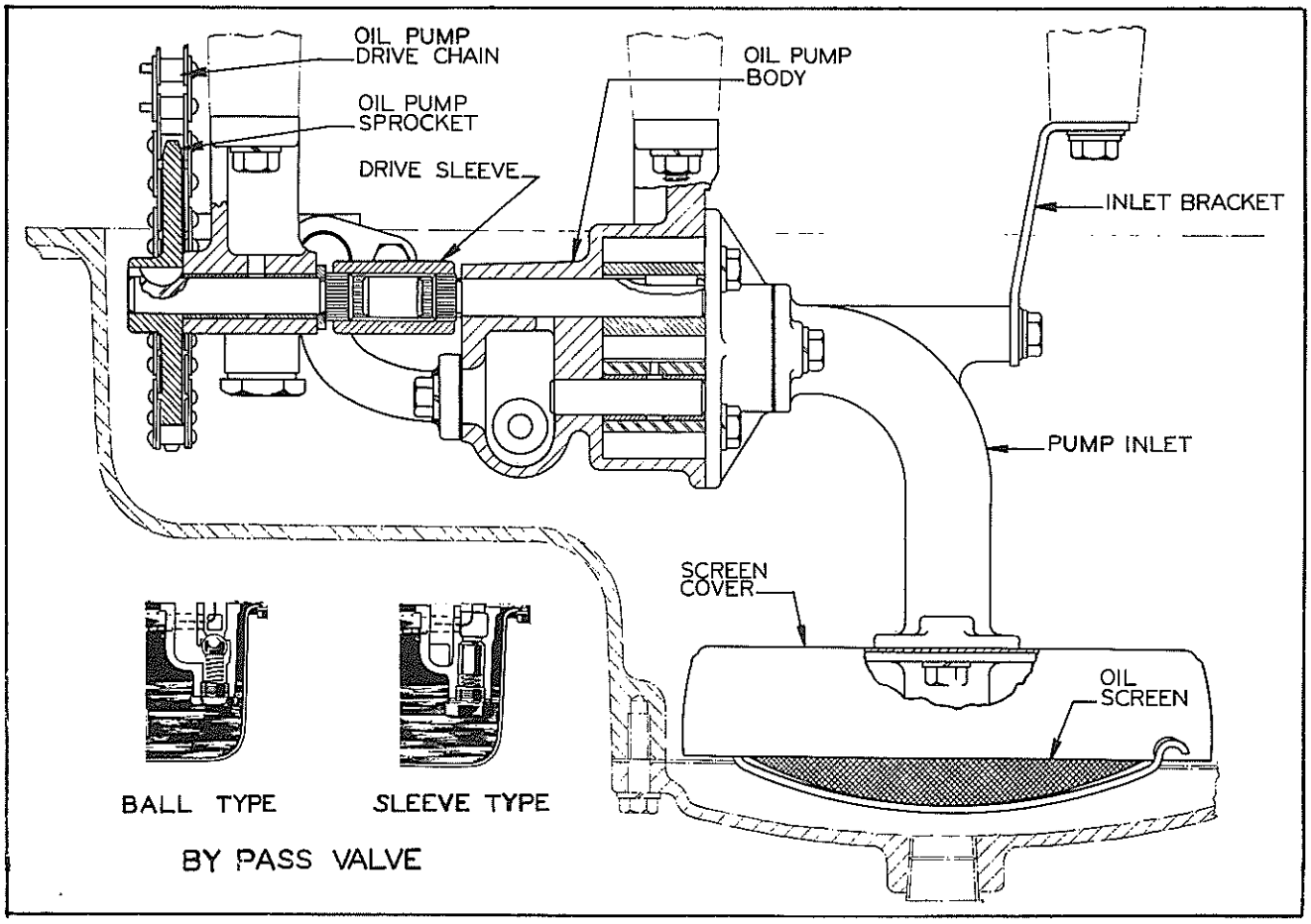

FIG. 2

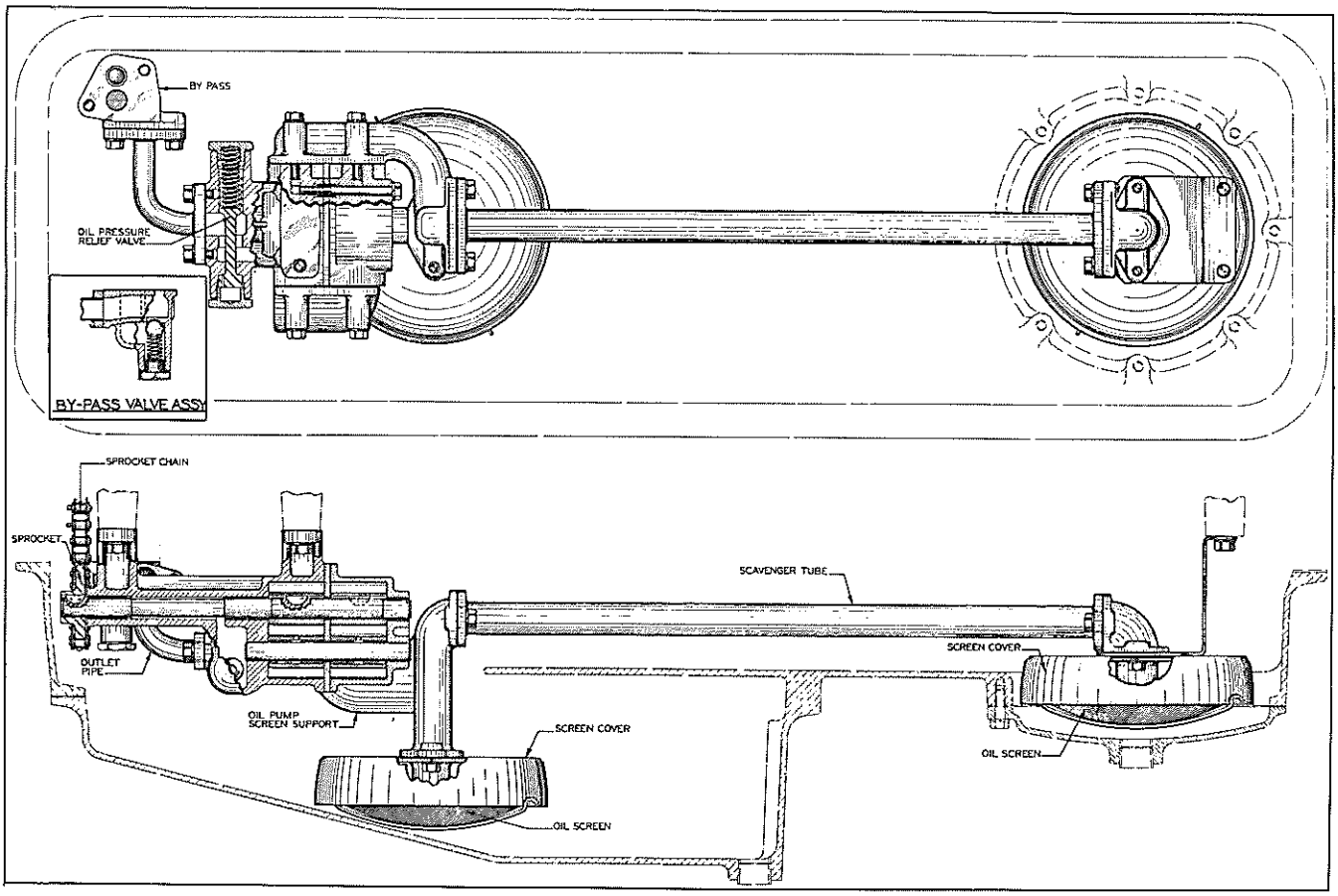

FIG. 3

6. Remove oil pump sprocket shaft assembly from front main bearing. By manipulating sprocket assembly, sprocket can be disengaged from sprocket chain.

6-CYLINDER ENGINES

On the 6-cylinder engines remove the capscrews holding the pump assembly to the main bearing caps and slip the pump shaft sprocket from beneath the drive chain.

NOTE: If motor is out of tractor and bottom side up, support chain to prevent it from dropping down inside crankshaft front cover.

B. DISASSEMBLE OIL PUMP

6-CYLINDER ENGINES

NOTE: Care should be taken when disassembling pump to notice relative position of parts thus saving valuable time in assembling. Refer to Figs. 3 and 4 while disassembling pump.

1. Remove the 2 retaining nuts and copper gaskets from each side of pump body and jar the relief valve assembly from body of pump.
2. Remove the pump cover from the body.
3. Remove the pump idler gear from stub shaft.
4. Fasten pump body in vise, place puller on sprocket and pull sprocket from shaft as shown in Fig. 5.

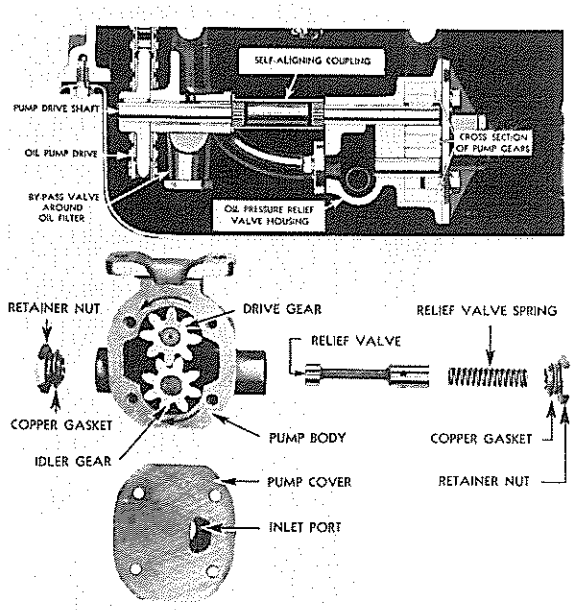

FIG. 4

5. Remove Woodruff Key from shaft and withdraw shaft from pump body.
6. If drive gear is to be removed from shaft, place gear on press and push shaft through gear.

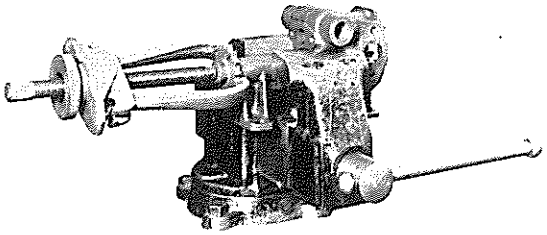

FIG. 5

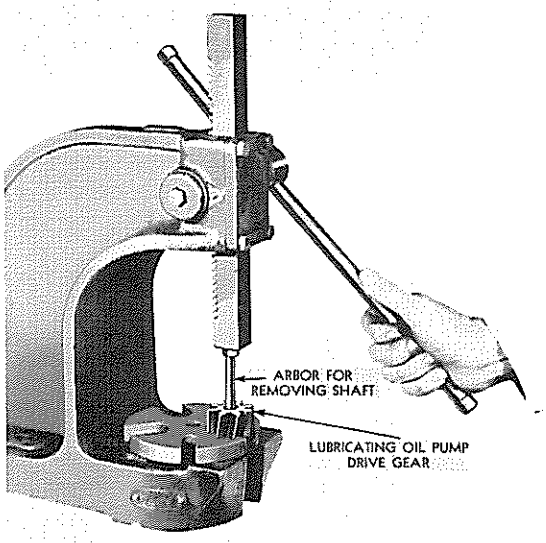

FIG. 6

3 AND 4-CYLINDER ENGINES

1. Steps 1 to 3 are the same as for the 6-cylinder engines.
4. Place pump body and drive-gear assembly on bed of arbor press, "cover side" up, and by means of arbor on gear end of pump shaft, press shaft through gear, removing gear and feather key from the shaft.

NOTE: Be careful not to cover keyway with arbor when removing gear, thereby preventing key from being removed with gear.

C. INSPECTION OF OIL PUMP PARTS

1. Wash all oil pump parts thoroughly before inspection.
2. The principle wearing parts are the gears of the oil pump. If the oil has been kept clean the wear on these parts will be very slow. If, however, dirt and sludge have been allowed to accumulate due to negligent oil filter servicing, wear on these gears will be rapid. This practice abuses not only the oil pump, but other parts of motor as well.
3. Inspect gears for wear and scored teeth; if worn or scored install new gears.
4. In an efficient pump, the gears will run freely with no perceptible looseness.
5. Inspect seat and ball of by-pass valve (first type); install new parts where necessary.
6. The second type by-pass valve is a sleeve type; inspect assembly, install new parts where necessary.

D. ASSEMBLE OIL PUMP

1. The oil pump operates in clockwise direction when viewed from sprocket end, and the intake will be located on left side. Relief valve will be on the same side of pump (toward blower side of engine).
2. The gear and pump drive shaft has a Keyway about 1-5/8" from end of shaft. If gear was removed, install Woodruff key and press gear on shaft with arbor, press until inner end of gear is $6\frac{15}{32}$" from sprocket end of shaft.
3. Lubricate the shaft and insert it into the pump body.
4. Install Woodruff key at the sprocket location and align the keyway with the key. Start sprocket on the shaft with flat face of sprocket facing pump body.
5. Support gear end of pump shaft on bed of arbor press and press sprocket on shaft to within .010" from pump body.
6. Lubricate stub shaft and install idler gear.
7. See that finished face of pump body is perfectly flat so that it will make a tight joint between cover and body as there is no gasket used at this joint.

NOTE: Observe Fig. 4 as to the position of the oil pump covers for the 3 and 4-cylinder engines. After pump is assembled, revolve shaft by hand to see if there is any bind. Pump shaft will turn freely when the pump is correctly assembled.

E. INSTALLATION OF OIL PUMP

With main bearing caps in place and the pump drive chain in position on the crankshaft sprocket, the lubricating oil pump may be installed as follows:

1. On the 6-cylinder, work sprocket on pump shaft under drive chain and secure pump assembly to main bearing caps with 4 lockwashers and capscrews.
   On the 3 and 4-cylinder, secure pump assembly to number two bearing cap, but dont tighten. If shims were remov-

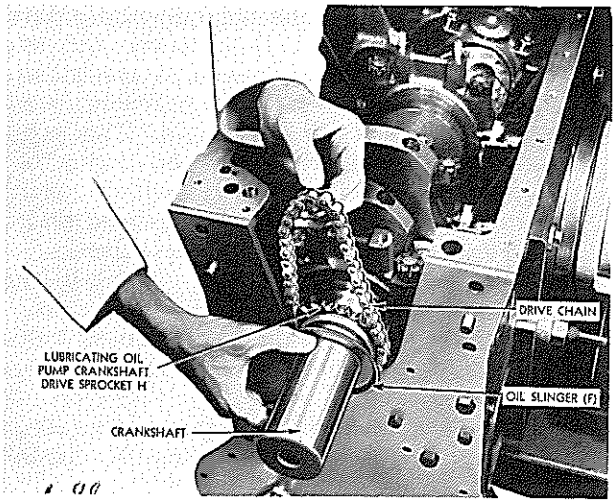

FIG. 7

ed, they must be replaced for correct chain tension. Pump may need shifting later to align drive coupling.

If driven sprocket and bearing assembly was removed, slip drive coupling on end of pump shaft and work sprocket under drive chain, slip drive coupling back on sprocket shaft and secure assembly to front main bearing cap with 2 lockwashers and capscrews, finger tight only. Observe whether coupling slips freely on both shafts with pump and sprocket bearing assembly in place. Coupling must be free on both shafts when assemblies are tightened in place.

NOTE: Inspect backlash of the oil pump drive chain, this must be from ¼" to ¾". Add or remove shims to obtain correct backlash.

2. Using new gasket, attach by-pass valve housing to cylinder block with 2 lockwashers and capscrews.
3. Using new gasket at each end, attach oil outlet pipe to by-pass housing valve and oil pump body, with 2 lockwashers and capscrews at each end.
   CAUTION: The 2 capscrews attaching oil outlet pipe to pump body must not exceed ⅞" in length.
   When tightening capscrews on oil outlet pipe, shift drive coupling endwise at the same time. If coupling binds on shaft, loosen and shift sprocket bearing assembly and perhaps outlet pipe, then retighten so coupling is free.
4. Position screen supports on the 2 correct main bearing caps and, with lockwashers on capscrews, start capscrew in place. Do not tighten.
5. Using new gasket at pump end, secure oil outlet pipe to pump body on 6-cylinder or to pump cover on 3 and 4-cylinder engines.
6. Install screen cover, screen and screen retainer on the 3 and 4-cylinder motors.
   NOTE: On the 6-cylinder motor install the scavenger tube and rear screen assembly.
7. Inspect for tightness of bolts and install oil pan.
   NOTE: Install upper oil pan on 6-cylinder motor. Then attach front screen assembly and install lower oil pan.
8. Refill with oil of proper specifications.

90 -- Oil Cooler

A. REMOVAL OF OIL FILTER AND COOLER ADAPTER

1. Drain the cooling system.
2. Remove the oil filter shell and oil filter element.
3. Disconnect the water by-pass tube from the cooler housing.
4. Remove the governor breather pipe.
5. Disconnect the cooler housing from the water pump and from the lower water connection.
6. Remove the 8 capscrews holding the cooler housing to the oil filter and cooler adapter.
7. Remove the oil cooler element.
   NOTE: Do not lay this element where it will be damaged; the fins on the cooler element can be damaged easily and will cause the oil to leak into the water.
8. Remove the 7 capscrews holding the oil

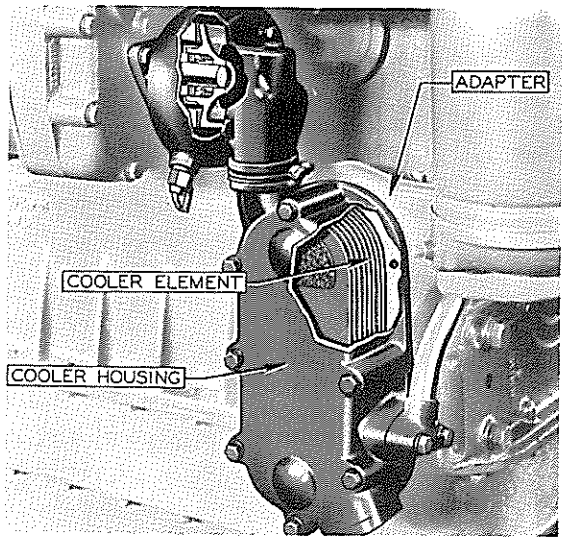

FIG. 1

filter and cooler adapter to the cylinder block.

B. INSPECTION

Inspect the oil cooler element for possible leaks, or for clogging.

C. INSTALLATION OF OIL FILTER AND COOLER ADAPTER

Be sure to use new gaskets throughout the installation of this assembly. SHELLAC THE GASKETS ON BOTH SIDES. Reverse the removal procedure to install the cooler adapter, cooler element, etc.

The above operations can be performed with the motor either in or out of the tractor.

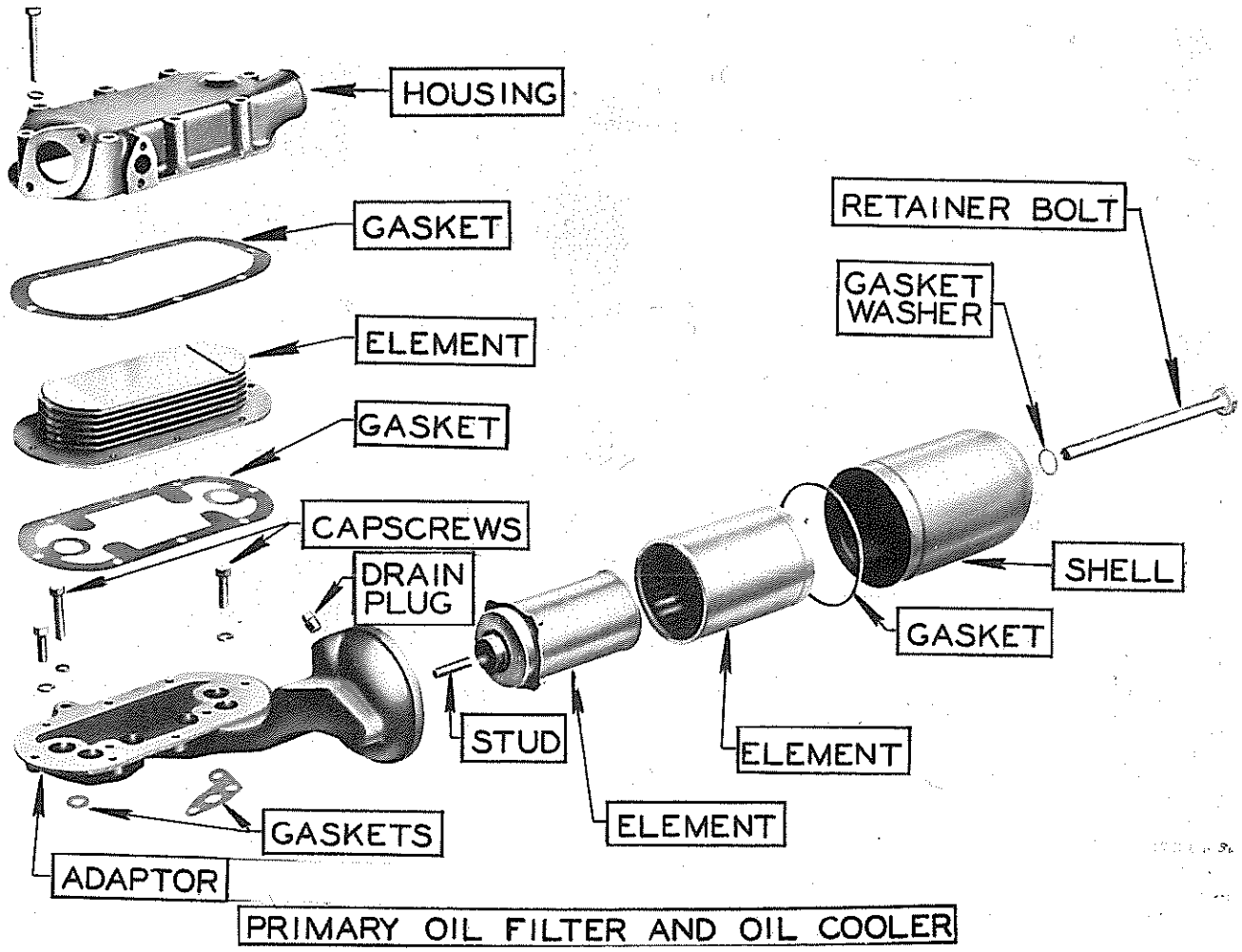

FIG. 2

91 -- Fuel Pump

Description—The fuel oil pump is the positive displacement vane type. The pump is bolted to the rear end of the blower cover, and driven from the lower blower rotor shaft through a U-shaped steel stamping which acts as a universal joint. An integral steel rotor and shaft supported in the pump flange and cover, revolves in a housing, the bore of which is eccentric to the shaft.

Two spring-loaded vanes, carried in the rotor, revolve inside the eccentric housing, thus displacing the liquid from the inlet to the outlet port. Two oil seals are used inside the flange at the drive end of the rotor shaft. One seal retains the fuel oil under pressure, the other prevents the lubricating oil in the blower timing gear compartment from creeping along the pump shaft.

The seals are located approximately $\frac{1}{16}$" apart and the feather edge of the leather on the inner seal faces the blower and that on the outer seal faces the pump body. A drain hole located between the two seals vents to atmosphere.

A spring-loaded, horizontal relief valve is provided in the cover of the pump, connecting the inlet and the outlet ports, which opens at a pressure of approximately 55 pounds per

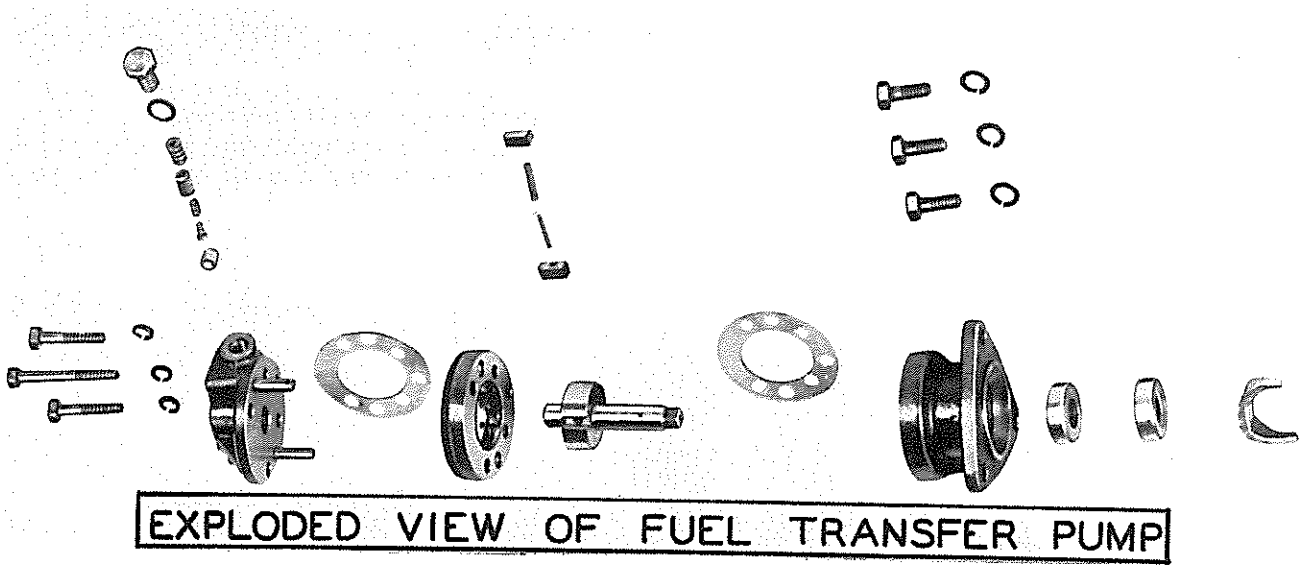

FIG. 1

square inch. This valve normally does not open since its purpose is to relieve excessive pump pressure in case any of the fuel lines or filters become plugged and build up an extremely high pressure in the pump. When the valve opens, fuel passes from the discharge side (pressure side) to the suction side of the pump.

When the fuel pump is installed on the blower, the inlet opening is always next to the cylinder block.

A. REMOVAL OF FUEL PUMP

1. Remove the right front fender.
2. Disconnect both the intake and discharge fuel lines from the pump.
3. Remove 3 capscrews that attach fuel pump to rear end of blower end cover.
4. Remove the pump and coupling fork as an assembly.

B. DISMANTLING FUEL PUMP

1. Remove the 3 capscrews that hold pump cover, body and flange together.
2. Drive the 2 dowels back into the pump flange and remove the cover and the gasket.

   CAUTION: Be careful not to destroy gaskets at each side of pump body as the same thickness gasket must be used again when assembling pump.

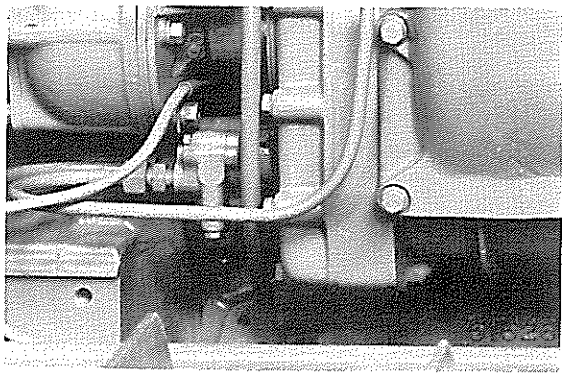

FIG. 2

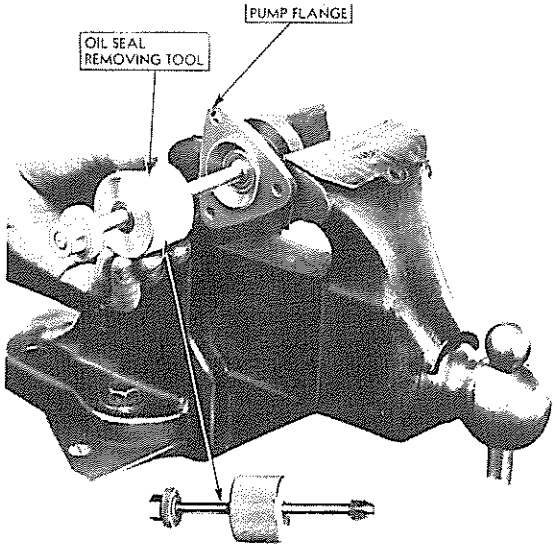

FIG. 3

3. Tap pump body off dowels with soft faced hammer. Rotor assembly can be withdrawn from position after removing cover. As rotor assembly is removed, hold vane with fingers.
4. Use new seals when ever pump is dismantled. Oil seals must be removed and replaced with special tools. Figs. 3 and 6.

C. INSPECTION OF FUEL PUMP PARTS

1. Inspect all parts for wear and breakage.
2. The paper gasket used on this pump body is the proper thickness. Do not use anything heavier.
3. If the relief valve does not form a tight seal with its seat, no attempt should be made to lap the valve or seat; new parts should be installed.

D. ASSEMBLE FUEL PUMP

1. Install the relief valve in the cover

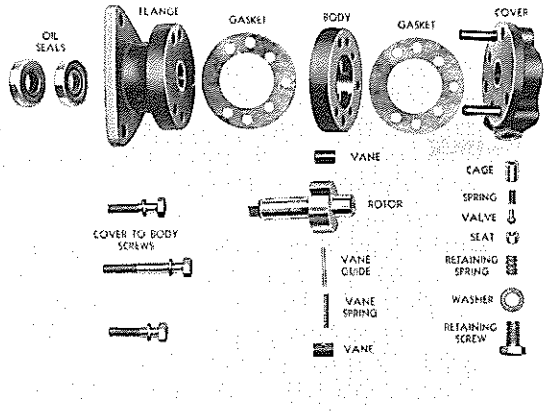

FIG. 4

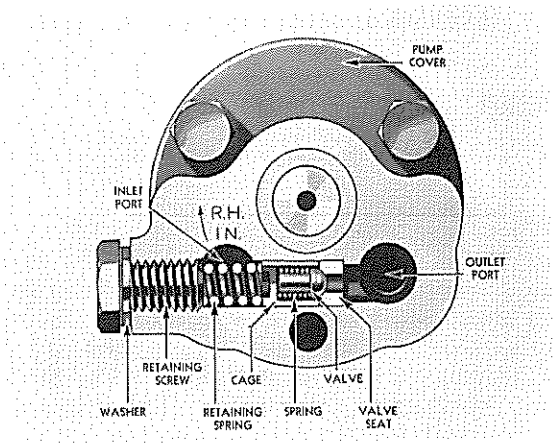

FIG. 5

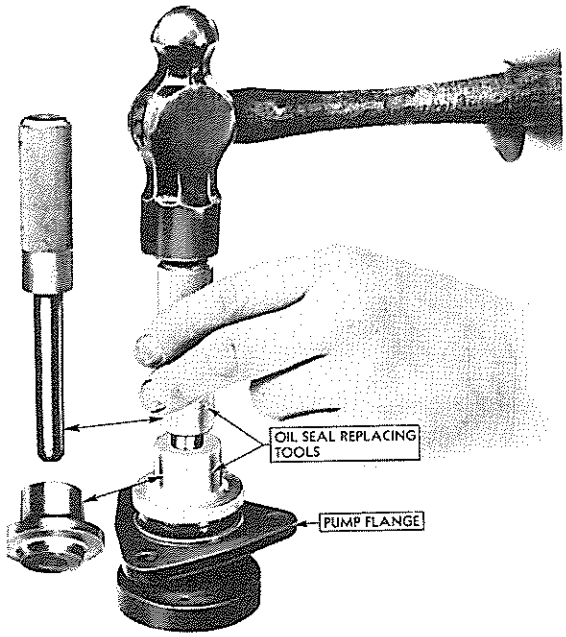

FIG. 6

using care to see that the relief valve seat is toward the fuel discharge opening. Fig. 5.

2. Install new seals in pump flange; locate seals as shown in Fig. 7; that is, with leather or inner seal pointing toward squared end of rotor shaft. Drive outer seal down tight against bottom of seal cavity and inner seal down to within approximately 1/16″ from outer seal using special tool.
3. Withdraw the 2 dowels from the pump flange and start dowels through the 2 holes in the pump cover.
4. Install the gasket between pump cover and pump body and install body on cover with recessed portion of body at pump inlet and outlet toward bottom of pump. Drive dowel through body with faces of body and cover tight against gasket.

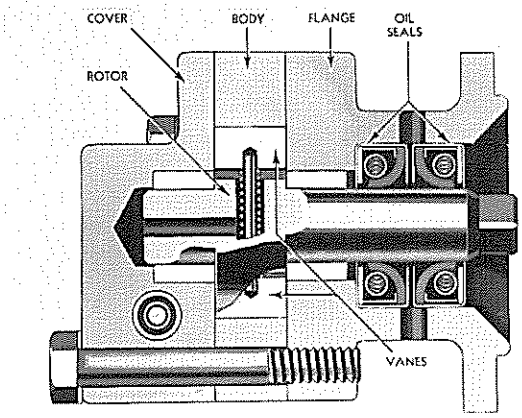

FIG. 7

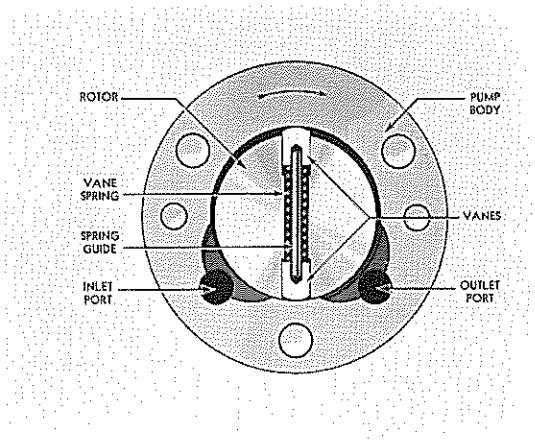

FIG. 8

5. Assemble spring guide, spring, and vane in rotor, compress vanes flush with outside diameter of rotor and place rotor on vane assembly in pump body. Fig. 8.
6. Use the assembling tool shown in Fig.

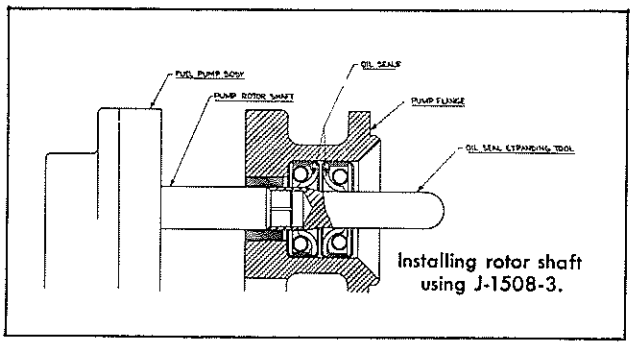

FIG. 9

9. Slide the flange on the rotor shaft and fasten pump securely together with the 3 lockwashers and capscrews.
7. See that the shaft turns freely before installing fuel oil connectors in pump cover. Make sure that the 3 capscrews bolting the pump cover to body are tight. Tightening the fuel connections with these capscrews loose may result in damage to rotor and shaft.

E. INSTALLATION OF FUEL PUMP

1. Install the drive coupling fork (arms out) on the squared outer end of the pump shaft and a new gasket on the pump supporting flange.
2. Set the pump assembly up against the blower end cover, being sure that the drive fork engages the slots in the driving plates. The lugs will engage the plate when the pump body rests tight against the end of the blower end cover.
3. Be sure that the end of the valve seat housing casting marked "IN" faces the cylinder block, then slide pump assembly into place and secure with 3 capscrews and lockwashers. Connect the fuel intake and discharge line to the pump.

92 -- Water Pump

Description—A centrifugal-type water pump is used for circulating the cooling liquid through the cylinder block, cylinder head, and the radiator. A bronze impeller with straight blades is pressed onto one end of the case-hardened steel shaft, and a pump drive coupling with an oil slinger is pressed onto the opposite end. The oil slinger shrouds the inner end of the pump body flange to prevent oil from creeping along the shaft and through the shaft bearing. The shaft is supported at the drive end on a sealed double-row combination radial and thrust ball bearing, and prevented from moving endwise by peening the pump housing at the inner end of the bearing.

Water is prevented from creeping along the shaft at the impeller end by means of a spring loaded Neoprene seal, retained in the impeller by a brass stamping. A wire slinger is fitted on the shaft between the pump housing and ball bearing to prevent moisture from creeping along the shaft to the bearing. The pump shaft and bearing constitute one assembly, and are serviced as such inasmuch as the shaft serves as the inner race of the ball bearing.

A. REMOVAL OF WATER PUMP

1. Drain the cooling system.
2. Loosen hose connection between water

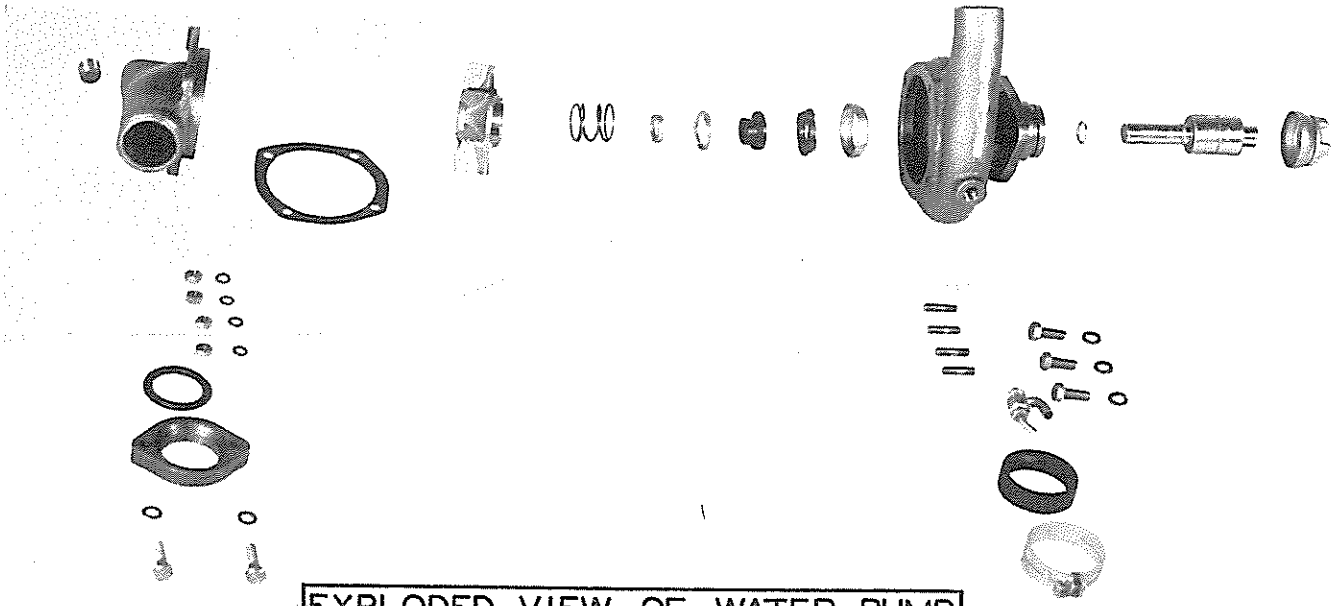

EXPLODED VIEW OF WATER PUMP

FIG. 1

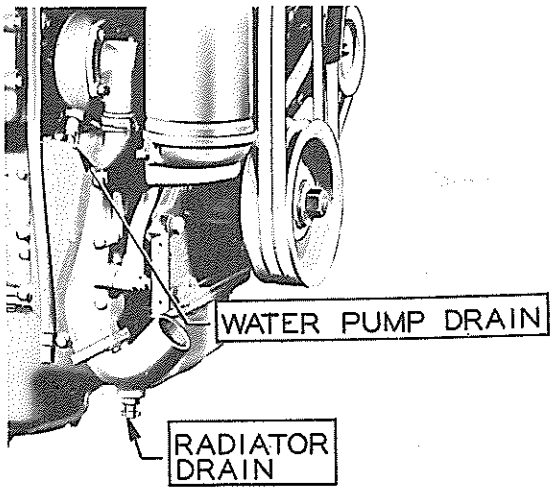

FIG. 2

pump and oil cooler.

3. Remove 2 capscrews and disconnect pump discharge flange from cylinder block.
4. Remove 3 capscrews and disconnect water pump from front end of blower. The inner capscrews (next to cylinder block) must be removed with special wrench, the same as is used on the fuel pump.
5. Withdraw pump assembly from end of blower.

DISASSEMBLY OF WATER PUMP

1. Remove pump cover.
2. Support the water pump in an arbor

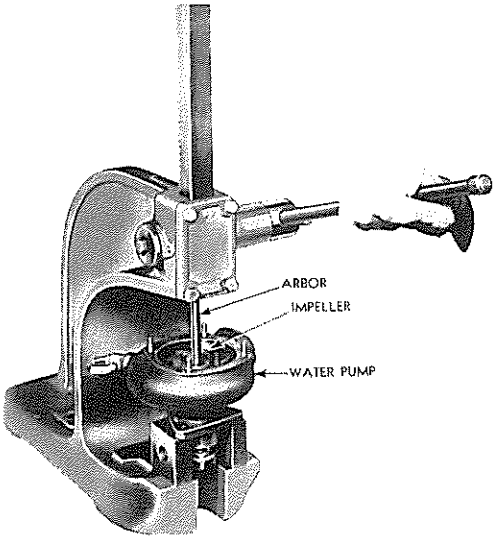

FIG. 3

press (flange down) and press the shaft through the impeller. Shaft and bearing assembly can also be removed from the housing during this operation.

C. ASSEMBLY OF WATER PUMP

1. The water pump may be assembled by

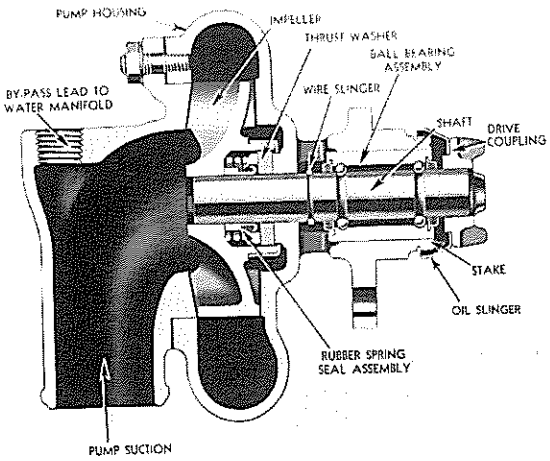

FIG. 4

reversing the sequence of operations for disassembly. After the impeller or the drive coupling has been removed from the shaft, these parts cannot always be used successfully the second time. These parts are held on the shaft solely by press fits and after they have been pressed on the shaft, the metal stretches slightly and may turn on shaft.

If a new shaft and bearing assembly is installed, the drive coupling may be pressed on the outer end of the shaft before the bearing assembly is installed into the pump housing. The outer face of the coupling hub should be flush with outer end of shaft when in place. Before starting the pump assembly study Fig. 4, which shows the relative location of all parts in the pump.

2. Press the shaft and bearing assembly into the pump housing with the inner face of bearing flush with the inner face of flange on pump body. Then STAKE bearing from endwise motion by upsetting pump flange with chisel or punch at 3 or 4 points.
3. Press impeller and new water seal assembly on outer end of pump shaft and a new drive coupling on inner end of shaft with face of coupling flush with end of shaft. Be sure a running clearance exists between the inner face of impeller blades and pump body. When the pump impeller is properly pressed on shaft, a running clearance will exist between the outer face of impeller blades and pump cover.
4. Bolt pump cover in place; then rotate shaft to see that impeller does not interfere with pump cover.

NOTE: As the water pump ball bearing is of the "shielded" type and filled with lubricant when assembled, no further lubrication is necessary.

D. INSTALLATION OF WATER PUMP

Reverse the above procedure to install the water pump on the motor.

NOTE: The water pump can be removed easily whether the motor is in or out of the tractor.

93 -- Governor

Description—Since the horsepower requirements on a tractor continually vary, due to fluctuating loads, some means must be provided to control the amount of fuel required and hold the tractor speed reasonably constant during such load fluctuations. This end is ac complished by means of a mechanical governor.

Since the governor operating mechanism is connected to the engine throttle, or to the injector control racks, the term "Throttling" governor is applied to this device. The functioning of the governor is brought about by a force, created by rotating weights, which is transmitted mechanically to the governor actuating mechanism.

The limiting speed governor is the mechanical type. The motion produced by the travel of the governor weights, between their inner and outer positions, is transmitted to the injector racks by a system of cams and levers to which can be attached a manual control.

The governor, which is mounted at the front of the blower, is divided into three main assemblies embodied in separate housings. These assemblies are:

1. Governor Weights and Housing.
2. Control Housing and Mechanism.
3. Cover.

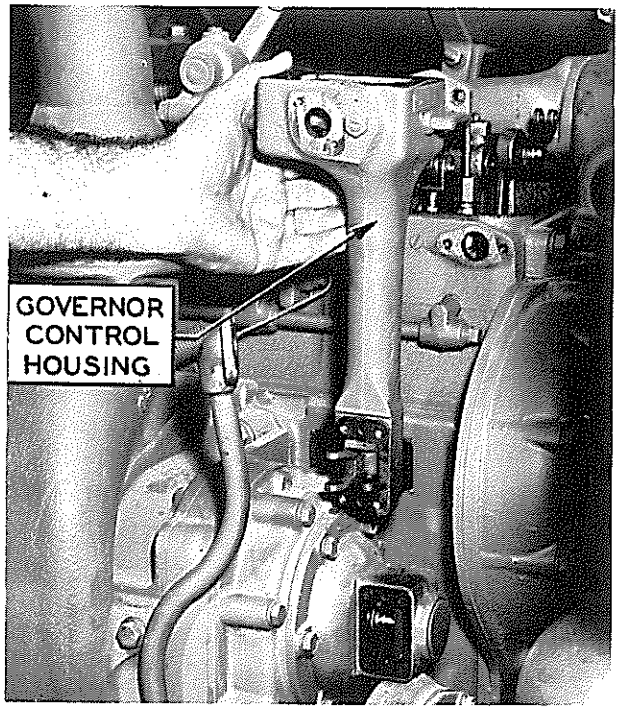

FIG. 1

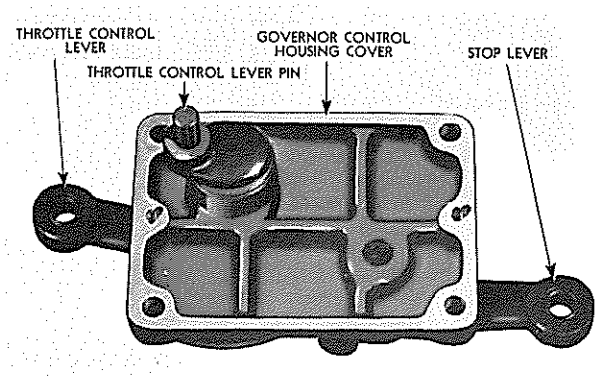

FIG. 2

A. REMOVAL OF GOVERNOR

1. Remove valve covers
2. Remove pin from control tube lever and governor control link.
3. Remove 4 fillister head capscrews and lockwashers from control housing cover assembly.
4. Remove clip and washer from differential lever and pin assembly; now remove governor control link.
5. Remove the 2 fillister head capscrews that hold breather pipe to governor housing assembly. Now breather pipe can be pulled up out of the clip, fastened at bottom on the oil cooler body.
6. Remove 4 capscrews and lockwashers holding governor body assembly to governor weight housing.
7. Remove 2 capscrews and lockwashers holding governor housing assembly to cylinder head.
8. Remove 6 capscrews and washers holding governor weight housing to front end of blower assembly. Now place on bench for further disassembly.

B. DISASSEMBLY OF VARIABLE SPEED SPRING HOUSING

1. Remove clip and washer from differential lever and pin assembly.
2. Remove 2 capscrews and washers holding variable speed spring housing to governor control housing.
3. Remove variable speed spring, and variable speed spring retainer. Watch for the washers in spring retainer.
4. Remove ⅛" pipe plug from top. Through this hole remove Allen set screw. The variable speed spring lever

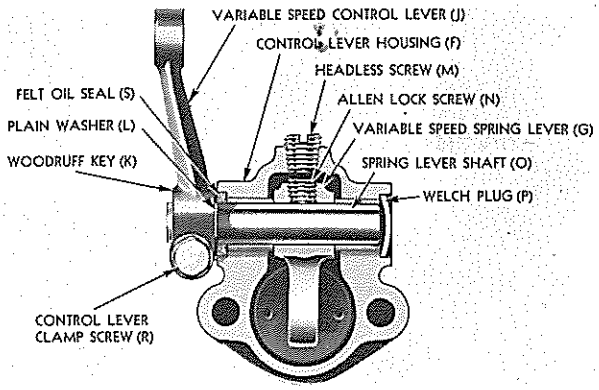

FIG. 3

and shaft, felt, and steel washer can be removed.

C. DISASSEMBLY OF CONTROL HOUSING

1. Remove variable speed plunger.
2. Remove 2⅜″ expansion plugs from lower part of housing, by using curved punch.
3. Punch out tapered pin that holds yoke to operating shaft.
4. Remove round head machine screw holding bearing and shaft in upper part of housing.
5. Remove tapered pin from yoke and shaft in lower part of housing; now lift out the shaft assembly from the top.

D. DISASSEMBLY OF OPERATING SHAFT

1. To remove bearing from shaft, drive taper pin from differential lever and pin assembly.
2. If variable speed spring plunger guide is worn and loose, drive it out and install a new one.
3. To remove the parts from the governor housing cover assembly, remove cap-

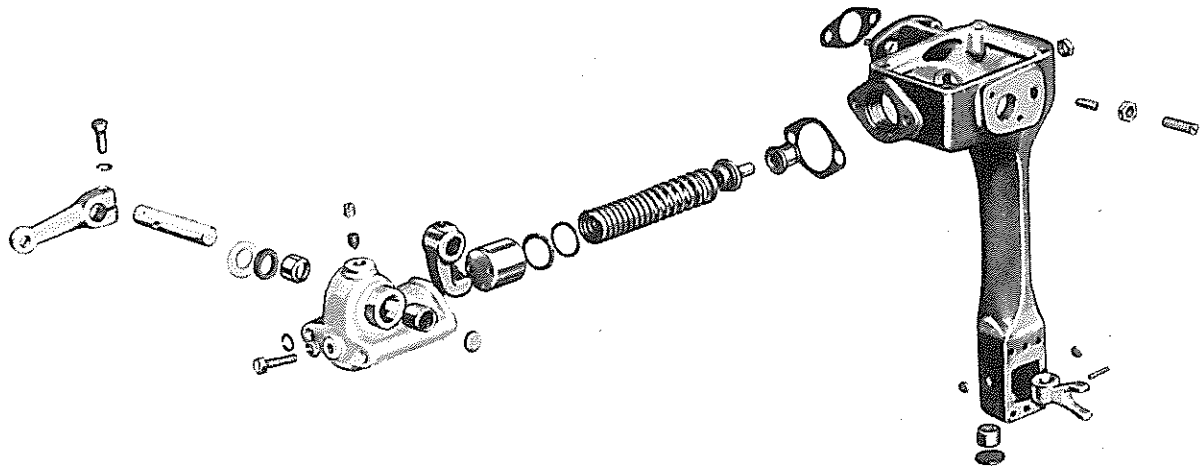

EXPLODED VIEW OF GOVERNOR CONTROL ASSEMBLY

FIG. 4

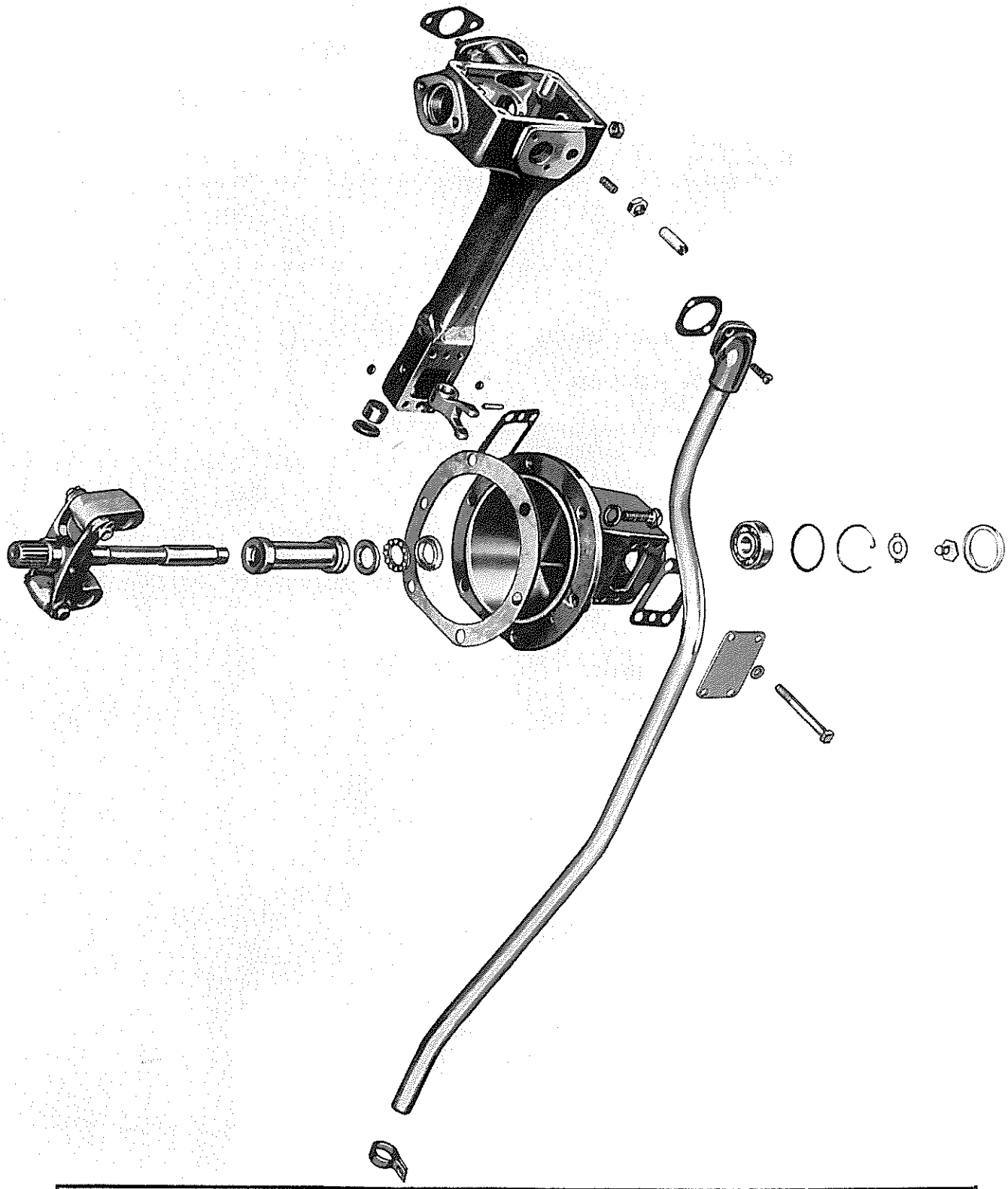

EXPLODED VIEW OF GOVERNOR WEIGHT ASSEMBLY

FIG. 5

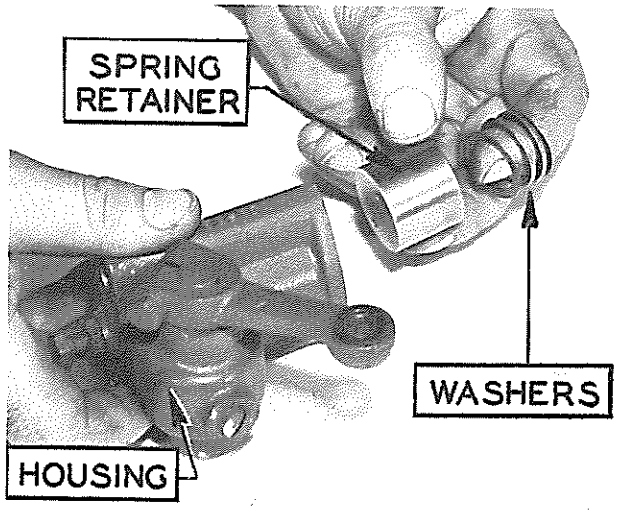

FIG. 6

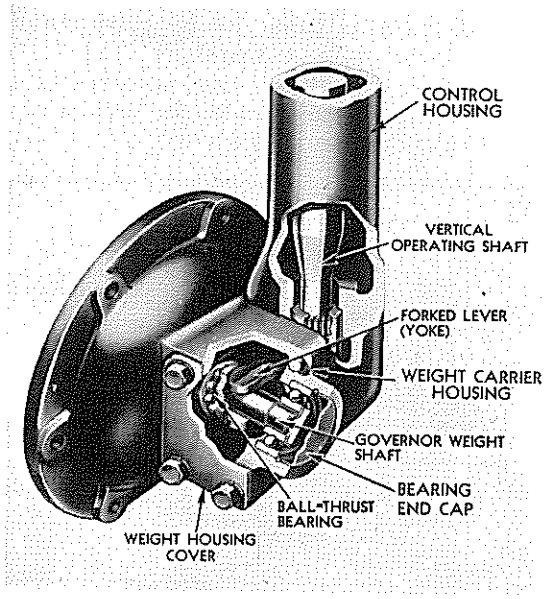

FIG. 8

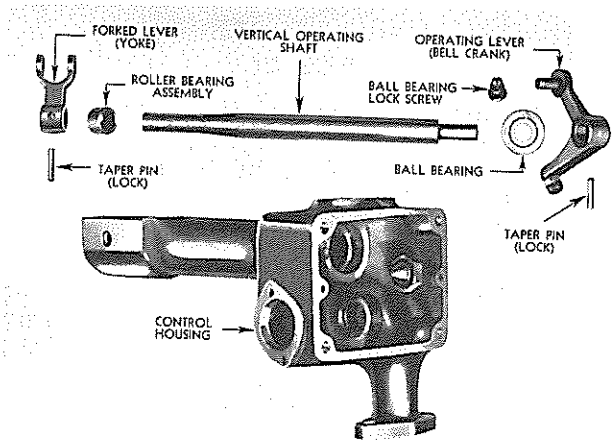

FIG. 7

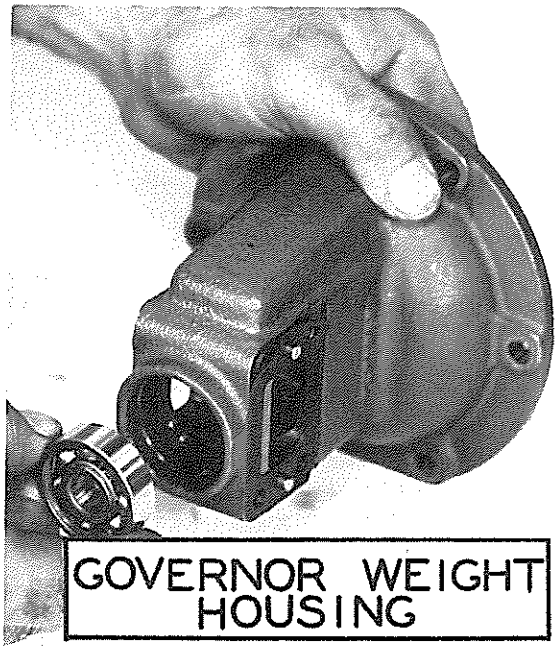

FIG. 9

screw from shutoff lever, drive out taper pin and remove the shaft.

4. To remove governor lever shut off stop, remove clip and washer.

E INSPECTION OF GOVERNOR PARTS ASSEMBLY

Remove housing end cap, straighten lockwasher on retainer screw, and remove retainer screw. Governor weight shaft assembly can now be removed and disassembled. The bearing can be taken out by removing the snap ring in outer end of housing.

1. Before assembling the governor, parts must be thoroughly cleaned, inspected for wear, and new parts installed where needed.

   When bearings and moving parts in the governor become worn, new parts must be installed to insure proper functioning of the governor.

F. ASSEMBLY OF GOVERNOR

1. To assemble the governor, reverse the disassembling procedure.

CAUTION: When assembling the variable speed spring, be sure to install the same total thickness of variable speed spring washers in the variable speed spring retainer as was removed at the time of disassembly, see Figure 6. These washers are installed to get the correct high idle speed. When replacing the control housing be sure the ball thrust bearing, Fig. 8, is toward the blower, between the forked lever and the governor weight housing.

All gaskets must be in good condition or new gaskets installed.

2. Before installing the control housing cover assembly, make the following test of the governor. Fig. 10.

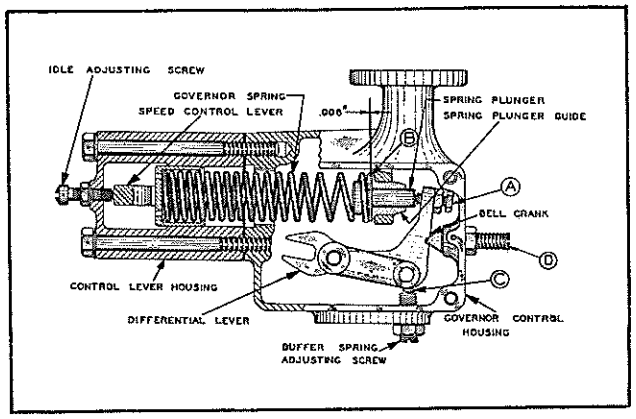

FIG. 10

a. Pull the throttle control lever all the way back.
b. Loosen locknut on adjusting screw (A) and turn adjusting screw in or out until a .006" feeler gauge can be inserted between the spring plunger and spring plunger guide at (B).
c. Tighten locknut.
d. Loosen locknut on buffer spring adjusting screw.
e. With the hand, push the governor injector control link toward the buffer spring so as to close the injectors completely.
f. Turn the buffer spring adjusting screw in or out until a .020" feeler gauge can be inserted between the differential lever and the buffer spring screw at (C).
g. Tighten locknut.
h. Install the governor control housing cover. Be sure dowels are in holes and pin is in slot in differential lever.

NOTE: When the motor was originally assembled, the adjusting screw (D) was backed out as far as possible and the locknut securely tightened. This screw plays no part in the adjustment or operation of this governor. It will never be necessary to change the original setting of the screw, Later governors do not have this adjusting screw, as shown.

G. ADJUSTMENT FOR R.P.M.

After the governor is reassembled and placed on the tractor the R.P.M. should be checked. This can be done as shown in Fig. 11. Be sure the generator belt is tight and not worn. Determine the R.P.M. of the crankshaft. Generator turns 1.7 times crankshaft speed.)

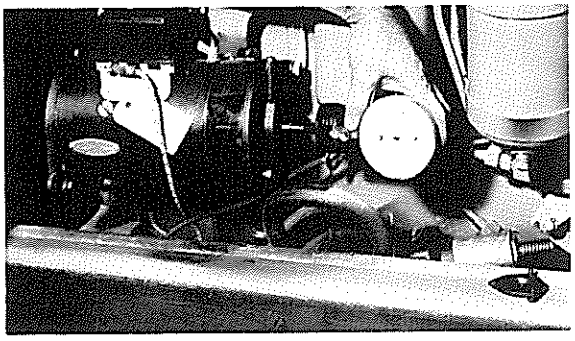

FIG. 11

The high idle speed of the "HD 14" and "HD 7" is approximately 1650 R.P.M. and the high idle speed of the "HD 10" is 1750 R.P.M.

NOTE: If the high idle speed is not correct, proceed as follows:

1. Make certain that all motor adjustments are correct, all controls running from dash to motor have the correct adjustment and the motor is in good operating condition BEFORE THE R.P.M. IS INCREASED.
2. After all adjustments and controls have been examined and corrected, if necessary,, proceed again to determine the R.P.M. as shown in Fig. 11.
3. If the R.P.M. is too low, variable speed spring washers can be added. Washers are available in two thickness, .078" and .015". Only the .015" washers are used to increase R.P.M. unless the governor has been taken apart and washers have been lost; then possibly the .078" washer will be required.
   One .015" washer will increase the speed approximately 40 R.P.M. If the R.P.M. is too high, washers should be removed. See Fig. 6.

94 -- Electrical Equipment Warranty and Adjustment Policy

Manufacturers of electrical equipment used on Allis-Chalmers tractors are responsible for the equipment they furnish. Any claim for defective or faulty equipment of this nature must be presented to the manufacturer of the equipment, not to Allis-Chalmers Mfg. Co. All suppliers of such equipment are represented by distributors in nearly all cities and are glad to make reasonable adjustments or replacements for their respective companies.

95 -- Starter Motor

Starter Motor and Dyer Drive—The Dyer Drive, which transmits the power of the starter motor to the engine flywheel, consists of the splined portion of the armature shaft, the shift sleeve, the pinion guide, the pinion, the pinion stop, washers, and springs. The thrust washers furnish a thrust bearing for the shift sleeve when it is in the returned position; the springs aid in the lock operation and in the engagement action. The entire drive is contained in the starter motor drive housing. The movement of the pinion is controlled by means of a shift lever which is connected directly to the shift sleeve. The Dyer Drive provides for positive engagement of the starter motor pinion with the engine flywheel before the starter motor switch contacts are closed or the armature is rotated. The pinion is thrown out of mesh with the flywheel by the reversal of torque as the engine starts.

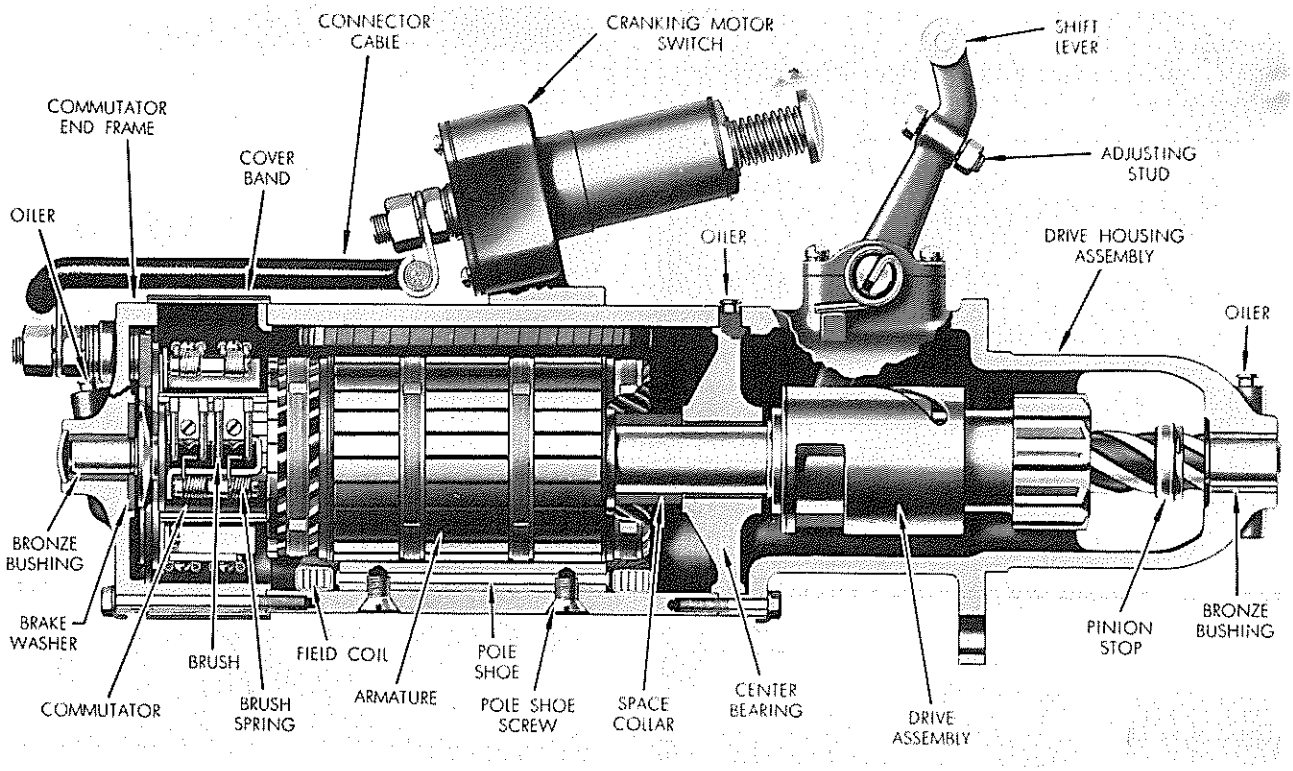

FIG. 1

A. STARTER SWITCH MAY BE FAULTY

After extended use, the contact surfaces of the starter switch may become burned or corroded so that either no current at all, or insufficient current for starting is transmitted to the motor. A faulty switch might be indicated by the engine cranking hard or difficulty in keeping the battery charged. The switch can easily be disassembled so that the burned or corroded surfaces may be reconditioned.

1. Disconnect battery cable at starting motor; tape the exposed end of the cable.
2. Remove bottom plate of switch by removing 4 capscrews.
3. Remove contact disc from plunger by removing castellated nut.
4. Clean and smooth contacting surfaces with a file or sandpaper. Be sure that

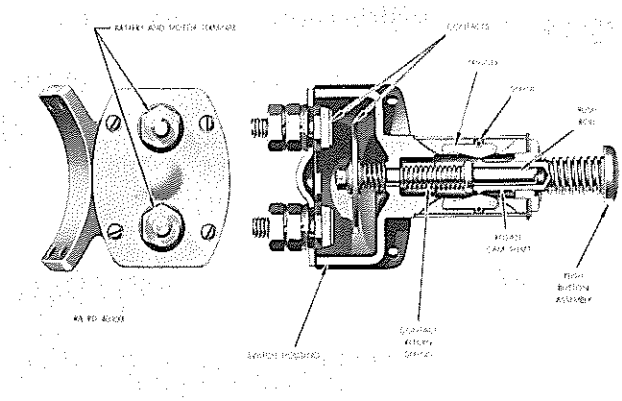

FIG. 2

surfaces contact over the entire area when reassembled.

B. DYER DRIVE MAY BE INOPERATIVE

If grease and dirt are allowed to accumulate on the armature shaft or in the mechanism, the Dyer Drive may seize or lock. If this occurs while the pinion is engaged, considerable damage may result to the starter motor.

To disassemble and service this drive assembly:

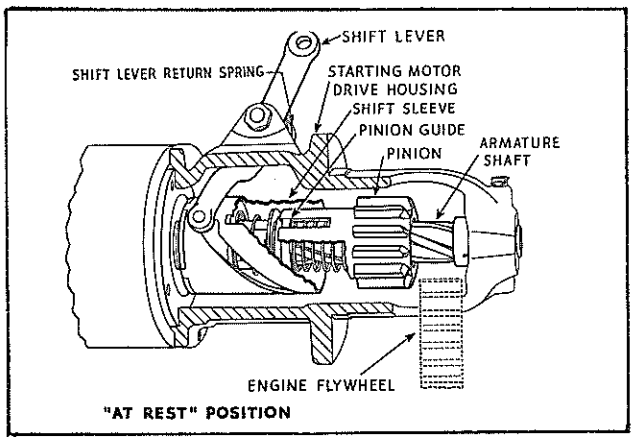

FIG. 3

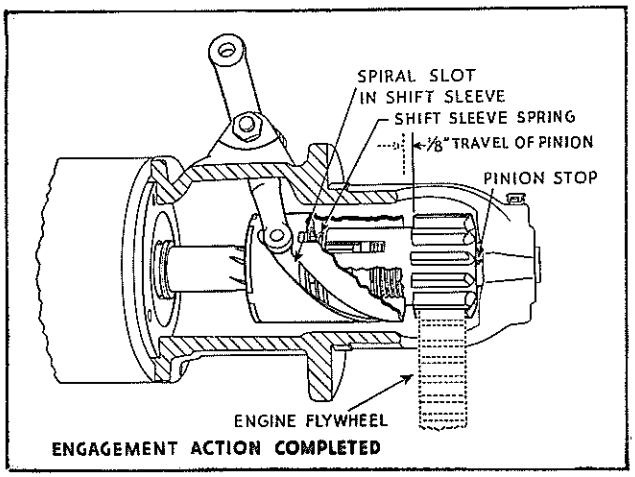

FIG. 4

1. Disconnect battery cable from starter motor; tape the exposed end of the cable. Remove starting motor assembly from engine.
2. Remove Dyer Driver housing from starter motor.
3. Remove pinion stop on the armature shaft by removing cotter key.
4. Completely disassemble, clean all parts, and oil with light oil. Reassemble in reverse sequence.

C. STARTER MOTOR MAY BE INOPERATIVE

CAUTION: Do not operate starter for more than 30 sec. at one time.

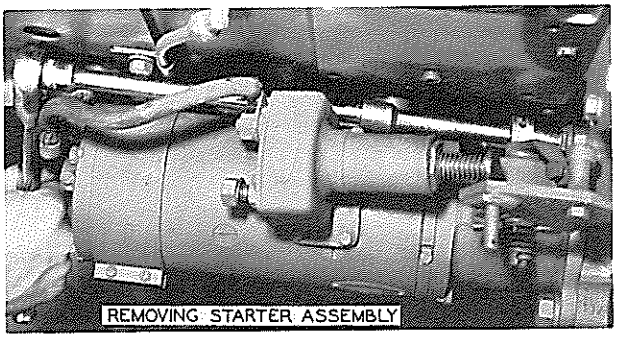

FIG. 5

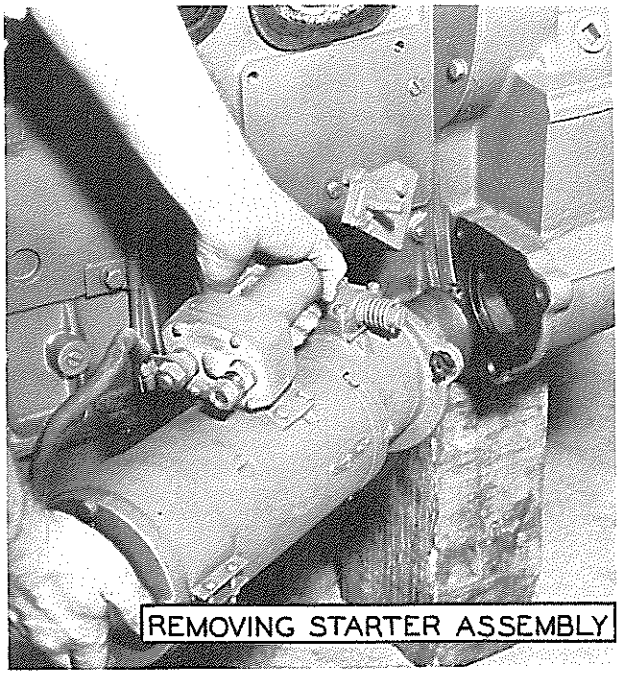

FIG. 6

1. Brushes may not be making good contact.
   a. If brushes are not seating properly, they should be fitted to conform to the contour of the commutator. To do this, place a strip of #00 sandpaper between the brush and the armature. roughened side toward the brush.

Work the sandpaper back and forth around the commutator so that the brush is "WORN IN" to shape. After this is done, the commutator should be polished and cleaned as described under paragraph on "commutator." (Paragraph 2 below)

b. Brush arms may be sticking so that the brushes do not come in actual contact with the commutator.

c. The brush arm springs may have lost their tension so that there is poor contact between the brush and the commutator. This spring tension may be tested with a small spring scale. Attach the scale to the brush directly under the heads of the screws that hold the brush to the arm. If a pull of less than 36 oz. will move the brushes off the commutator, the springs have lost their tension and new springs should be installed. If this tension is over 40 oz. excessive wear will occur on the brushes.

2. Commutator may be dirty or worn. This can easily be detected by an inspection with the cover band removed. If the commutator is dirty or slightly grooved, it can be cleaned by means of a piece of #00 sandpaper. Place the sandpaper between the brush and the commutator with the rough side toward the commutator. Then rotate the armature. After this polishing, the dust from the sandpaper should be removed from the armature and brushes. If the commutator is worn badly, the armature should be removed as a unit and trued in a lathe.

3. Starting motor may be burned out. This will occur if the motor is abused or if it is operated longer than 30 sec. at one time. If this occurs, it is advisable to either install a new motor or have it rebuilt by an authorized service station.

96 -- Generator

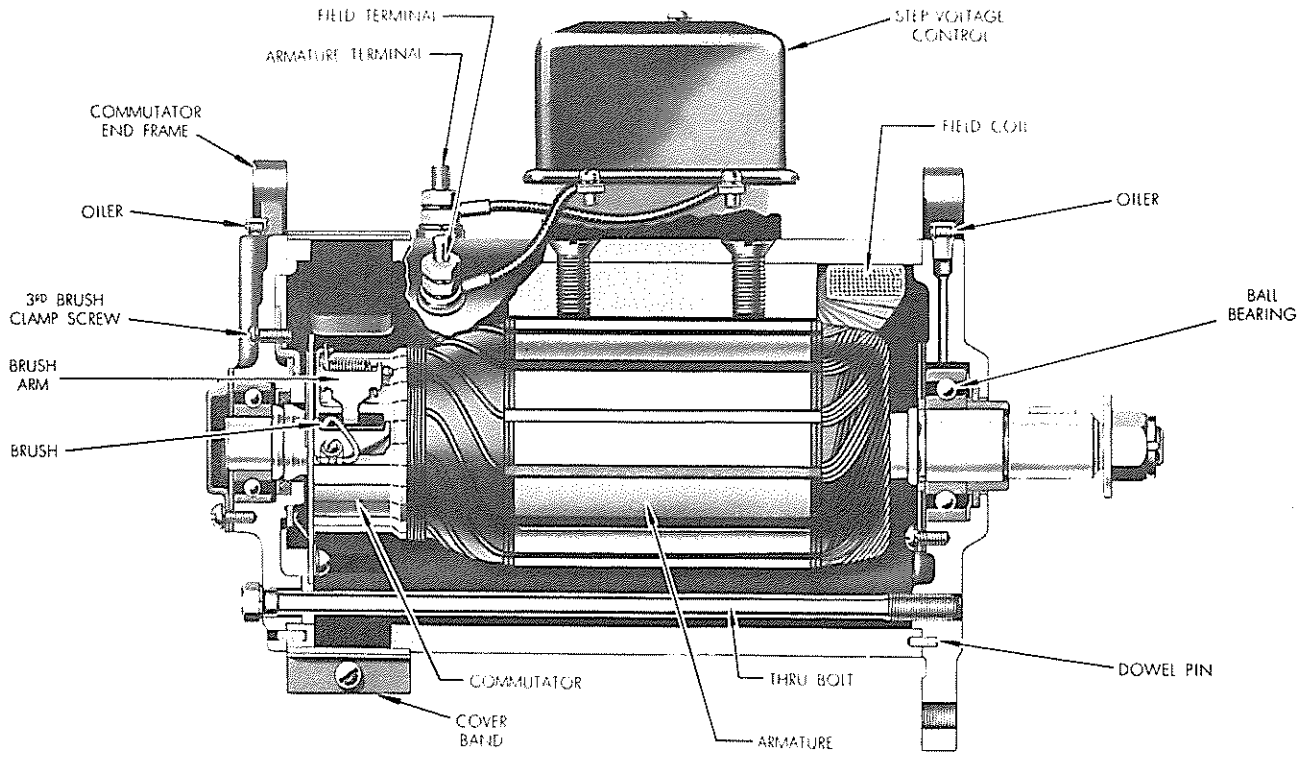

FIG. 1

A. TESTING AND ADJUSTING GENERATOR CIRCUIT

No attempt should be made to test or adjust any part of the generator circuit without dependable instruments. If such instruments are not available, the tests may be made by any United Motors Service Station, who are authorized to carry out any service operation in connection with the electrical starting system.

NOTE: All tests should be made with the voltage regulator cover in place.

B. INSTRUMENTS REQUIRED FOR GENERATOR-VOLTAGE CONTROL TESTS

To test the generator, the following instruments are needed: an accurate 0-10 or 0-20 ampere ammeter, an accurate 0-20 volt voltmeter, and a 2-ohm variable resistance of sufficient capacity to carry 10 amperes continuously. If these instruments are not available, take the units to your nearest United Motors Service Station. The voltage control cannot be adjusted on the tractor. This should be done by an authorized United Motors Service Station.

C. GENERATOR VOLTAGE CONTROL TESTS

1. A low charging rate with a fully charged battery indicates proper operation.
2. Excessive gassing of the battery indicates overcharge. The voltage control is designed to reduce the generator charging rate to approximately 2 amperes at 2000 generator r.p.m. (approximately 1200 engine r.p.m.) when the battery has approached a fully charged condition. Test the voltage control action by stopping the engine and connecting ammeter into the charging circuit. Disconnect load from Battery terminal of voltage control and connect negative ammeter lead to this terminal. Connect positive ammeter lead to disconnected lead. With the ammeter connected and the engine running, there should be 6 to 8 amperes charge for a short time (up to 30 minutes with a charged battery). As the energy used in starting is replaced in the battery, the battery voltage will rise until the voltage control operates. This should reduce the charging rate to about 2 amperes. Failure of the units to operate in this manner will necessitate their being taken off the engine for further test and adjustment.
3. A low battery, and a low or no charging rate, indicate either the third brush of the generator or the voltage control is out of adjustment. Loose connections in the charging circuit, particularly at the battery terminals, may also cause a low charging rate with a low battery. Connect ammeter in the charging circuit as described above. With the generator operating at about 2000 r.p.m. (approximately 1200 engine r.p.m.) and a low battery, the output should be 6 to 8 amperes. If less than 5 amperes is obtained, connect a jumper lead from the terminal of the voltage control to ground, (base of voltage control is satisfactory). If the output increases to 6 to 8 amperes, the trouble is in the voltage control. If the output does not increase to 6 to 8 amperes with the jumper lead connected from the terminal of the voltage control to ground, then the generator is at fault and must be tested as follows:

D. TESTING GENERATOR OUTPUT

1. Disconnect lead from "BAT" terminal of voltage control and connect to one terminal of the variable resistance. Connect positive ammeter lead to "BAT." voltage control terminal. Connect negative ammeter lead to other terminal of the variable resistance. Connect negative voltmeter lead to "BAT." voltage control terminal and positive lead to ground (base of voltage control or generator frame.)
2. Connect a jumper lead between the terminal of the voltage control and the ground to eliminate the voltage control resistance.
3. Set engine speed for maximum generator output (approviate 2000 generator r.p.m. or 1200 engine r.p.m.)
4. Adjust variable resistance until voltmeter reads 14.1 to 14.5 volts. The output should be approximately 6 to 8 amperes with the generator at operating temperature. Adjust the generator output by shifting the third brush in the direction of rotation to increase the output, and in the opposite direction to decrease the output. Adjust the variable resistance after shifting third brush to maintain 14.1 to 14.5 volts before taking ampere reading.
   CAUTION: Never, under any circumstances, set the generator output above 8 amperes at 14.1 to 14.5 volts.
5. If unable to obtain 6 to 8 amperes by shifting the third brush, remove the generator and voltage control and take them to a competent service station for a thorough test.

97 -- Fan

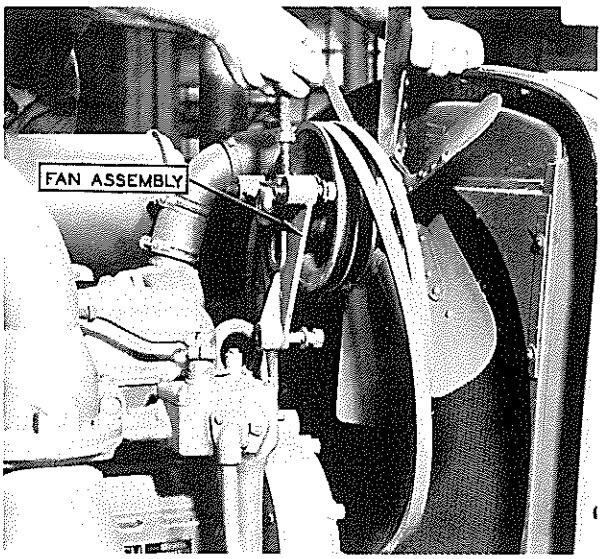

FIG. 1

A. REMOVAL OF FAN

1. Loosen the large nut at the rear end of the fan shaft, and loosen the lock nut and adjusting screw.
2. Remove the 3 capscrews holding the fan assembly to the balance weight cover and remove the assembly.

B. DISASSEMBLE FAN

1. Remove the large nut at rear end of shaft also the adjusting screw, then remove the fan bracket.
2. Remove fan blades and nut on front end of fan shaft, unscrew cork retainer at rear end of shaft.
3. The shaft can now be pressed from the pulley.
4. Install new bearings if worn and also a new cork washer.

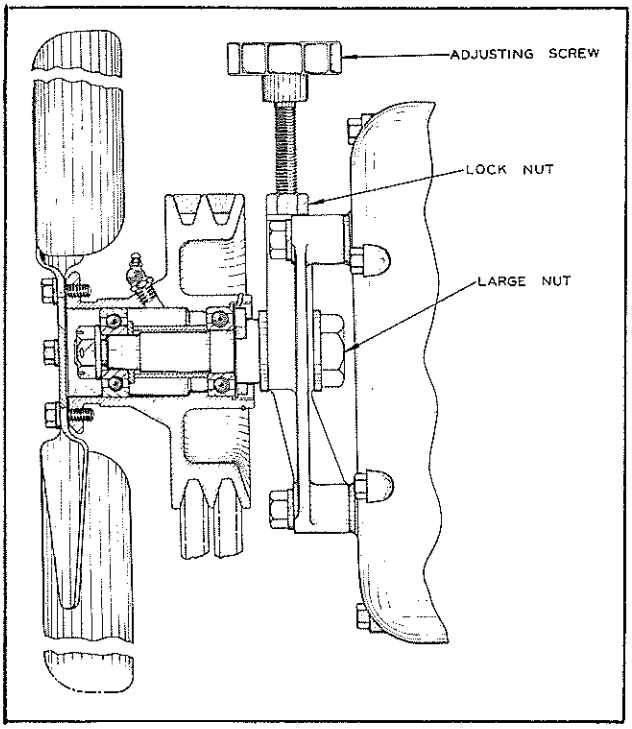

FIG. 2

C. REASSEMBLE AND INSTALLATION OF FAN

Reverse the above procedure for reassembly and installation.

98 -- Radiator

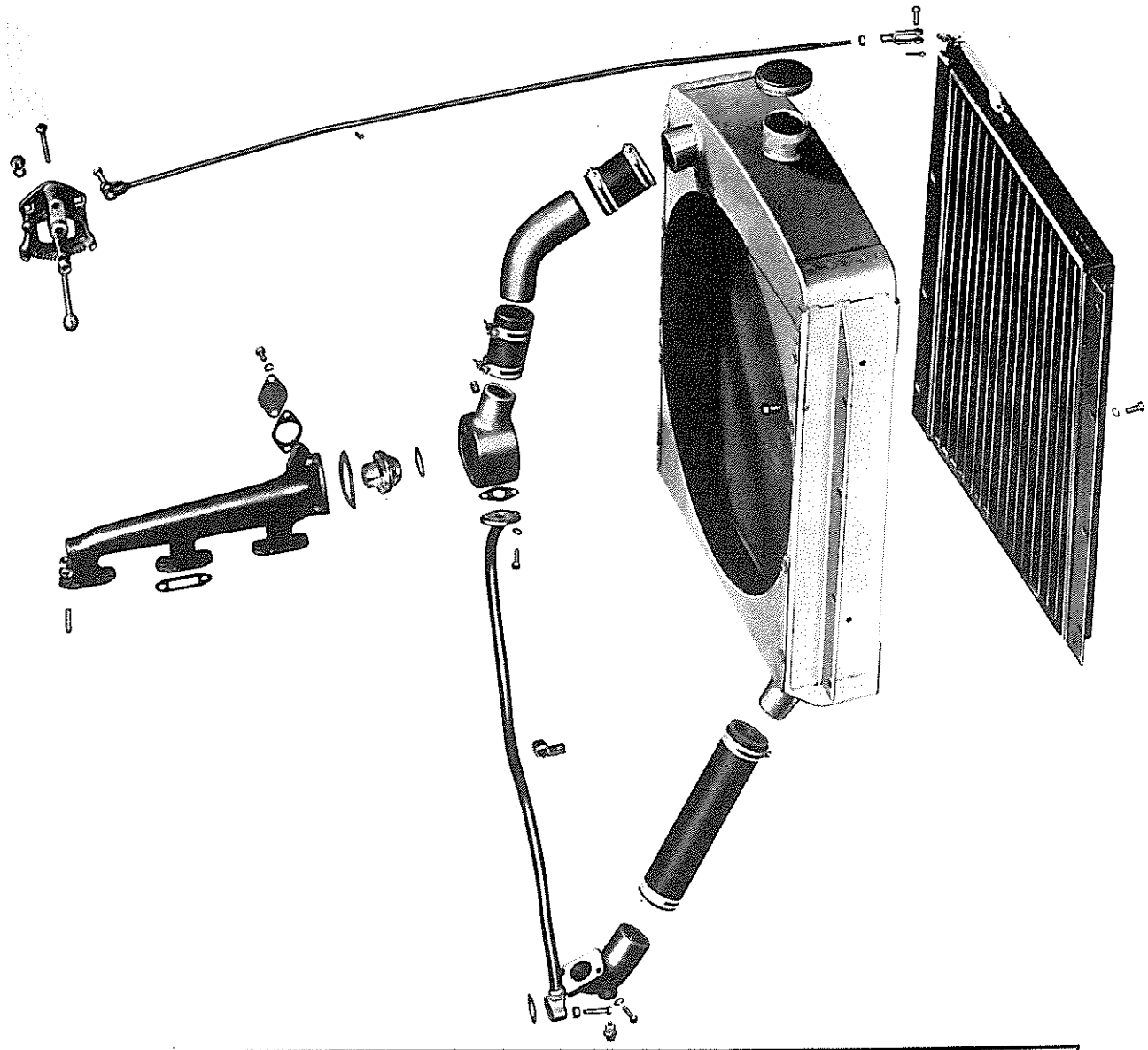

EXPLODED VIEW OF RADIATOR COOLING SYSTEM

FIG. 1

A. REMOVAL OF RADIATOR CORE

1. Remove pre-cleaners and hood.
2. Remove fan assembly.
3. Disconnect the upper and lower hose connections.
4. Remove the capscrews holding the radiator core to the radiator shell.
5. The radiator can now be pulled back and removed.

NOTE: It may be necessary to remove the primary oil filter housing and element to get the radiator to clear the radiator shell.

B. INSPECTION OF RADIATOR CORE

Inspect the radiator for leaks and clogging.

C. INSTALLATION OF RADIATOR

Reverse the above procedure to install the radiator core.

99 -- "HD 7" Master Clutch Removal and Installation

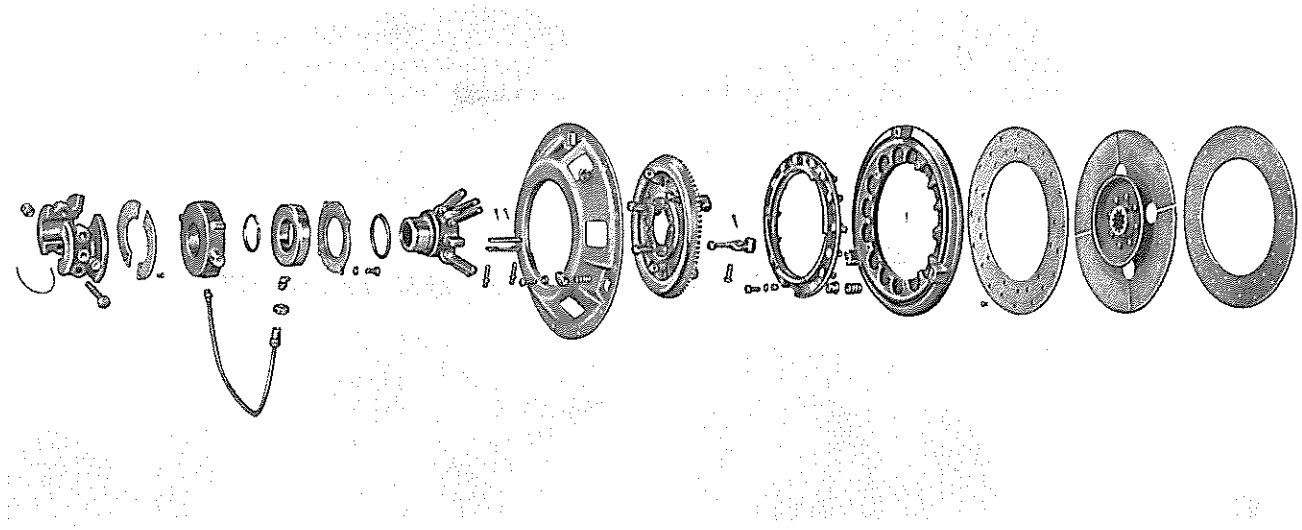

FIG. 1

A. REMOVAL OF MASTER CLUTCH

1. Remove motor and master clutch from tractor as described in Topic 74.

B. INSPECTION OF MASTER CLUTCH PARTS

1. Inspect pilot bearing for wear and lubrication. In case of improper lubrication, install a new pilot bearing oil wick. In case of excessive bearing wear, install a new bearing.
2. Inspect drive disc linings. The original thickness of each lining is 1/8". If they are worn to 1/16" install new disc. This will prevent any damage caused by the rivet heads coming in contact with pressure plate or flywheel drive surfaces. When installing linings, enter the rivets so that the heads are equally divided half on one side and half on the other side of the drive disc.

   NOTE: This information pertains to riveted linings only. New type linings are cemented to drive disc and can be worn down considerably farther without danger of scoring flywheel or pressure plate.

   The new type drive disc must be purchased as an assembly; linings can not be replaced. The original thickness of disc assembly is 3/8" thick.
3. Dismantle clutch by removing 3 capscrews which hold back plate to pressure Plate. Fig. 1.
4. Inspect actuating levers and rollers for flat spots and wear. Install new parts where necessary.
5. Inspect flat springs for breakage.
6. Inspect pressure plate for wear and warpage. If warped it can be placed in a lathe and machined true. However, not more than 1/16 of an inch should

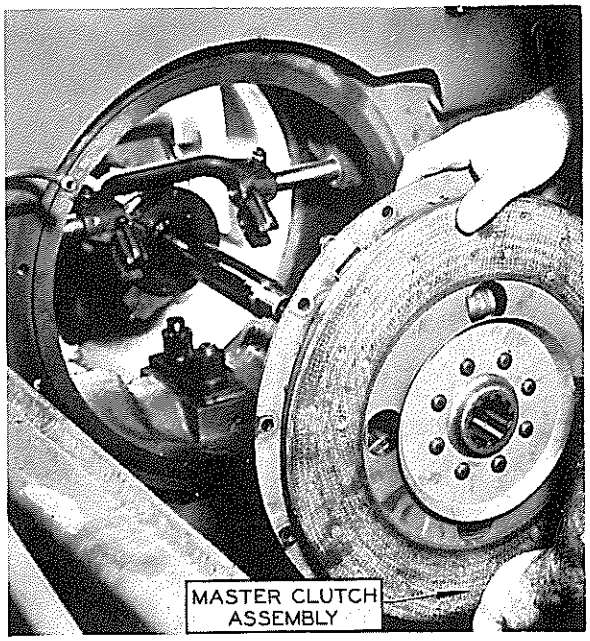

FIG. 2

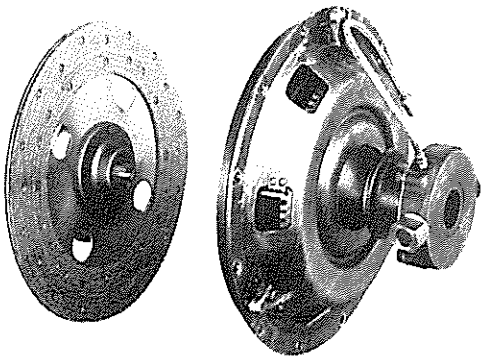

FIG. 3

be removed. Install a new pressure plate if the one removed is warped so it can not be machined.

7. Inspect clutch wearing surface of flywheel. This surface can show more wear and heat checks than the pressure plate surface and still be in serviceable condition. However, if it is excessively worn or is grooved, it can be removed from the crankshaft and trued in a lathe.

CAUTION: Never take off more than $\frac{1}{16}$" of metal. If both the flywheel and pressure plate are refaced, the combined cuts must not exceed $\frac{1}{16}$".

C. INSTALLATION OF MASTER CLUTCH

1. Install clutch assembly and drive disc on clutch shaft with the oil slinger on the drive disc toward the flywheel. Fig. 2.
2. Install motor in tractor as described in Topic 74-B.

100 -- "HD 10" Master Clutch Removal and Installation

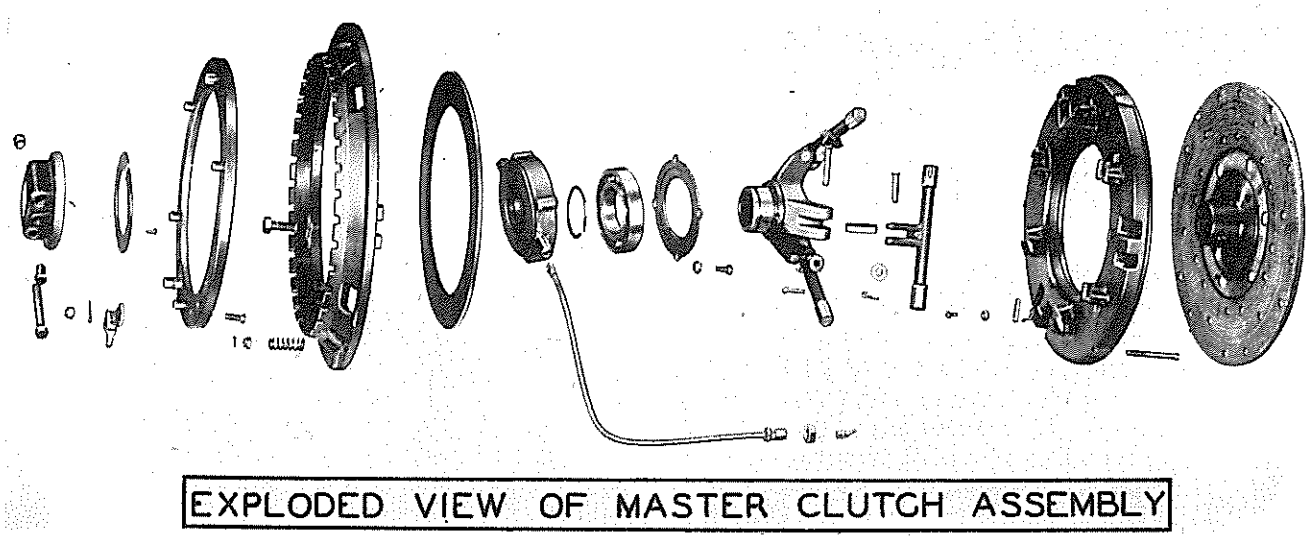

FIG. 1

A. REMOVAL OF MASTER CLUTCH

1. Remove motor from tractor as described in Topic 75.
2. Remove the 9 capscrews that hold the clutch assembly to the flywheel.

B. INSPECTION OF MASTER CLUTCH PARTS

1. Loosen the adjusting ring lock and screw adjusting ring assembly out of back plate.
2. Inspect the 3 cams for wear. If they show wear in the slots new ones should be installed. Make sure they are getting lubrication.
3. Inspect pressure plate for wear and warpage. If necessary it can be placed in a lathe and machined true. However, not more than $\frac{1}{16}$ of an inch should be removed. Install a new pressure plate if the one removed is warped beyond its limits for machining.
4. Inspect return springs and bolts.
5. Inspect clutch release bearings for excessive wear. To remove this bearing, remove the capscrews that hold plate to bearing carrier. Now the bearing carrier can be removed. Remove snap ring; bearing can now be removed from clutch sleeve.

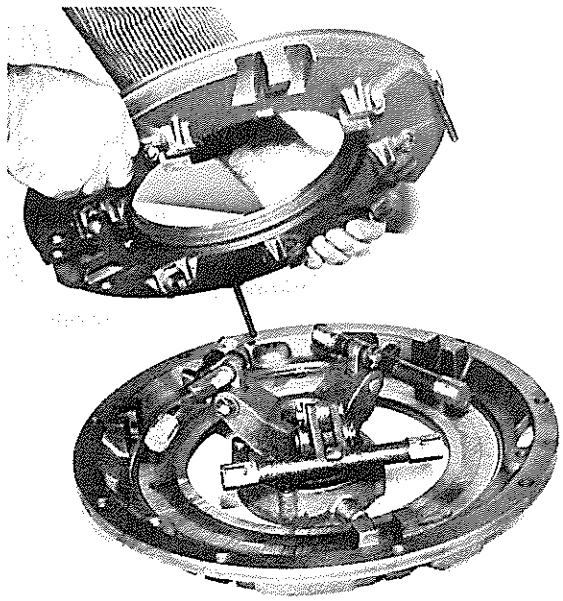

FIG. 2

6. Inspect sleeve for excessive wear.
7. Inspect driven plate thoroughly. Facings are not serviced separately so if

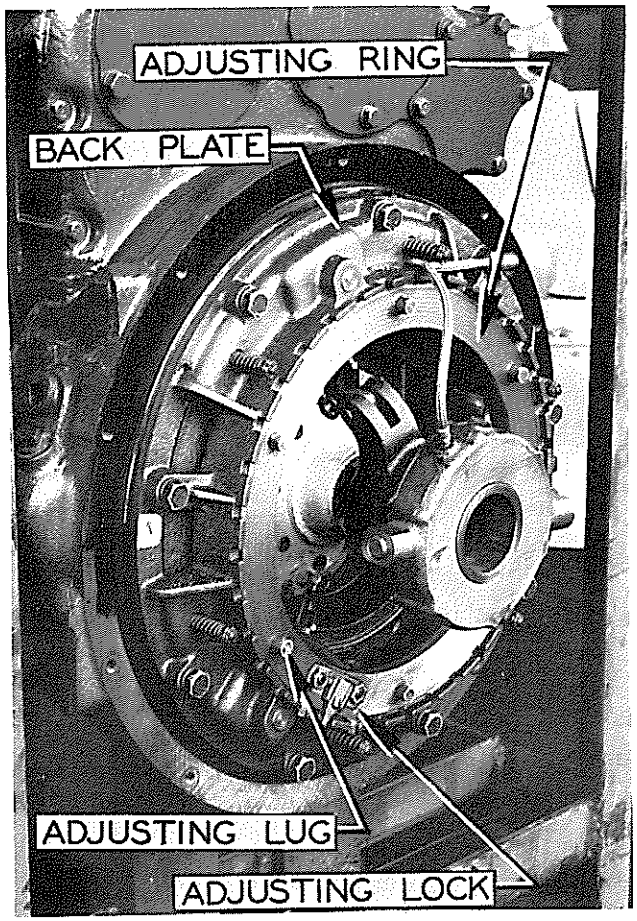

FIG. 3

overall thickness becomes less than $\frac{11}{32}''$ a new drive plate should be installed. The overall thickness when new is $\frac{15}{32}''$.

8. Inspect pilot bearing for wear and lubrication.
9. Inspect grease tube for breaks and leaks.

C. INSTALLATION OF MASTER CLUTCH

1. Reverse dismantling procedure to assemble.
2. Install clutch assembly on clutch shaft.
3. Install drive disc assembly on clutch shaft with the oil slinger toward front.
4. Install motor in tractor as described in Topic75-B.

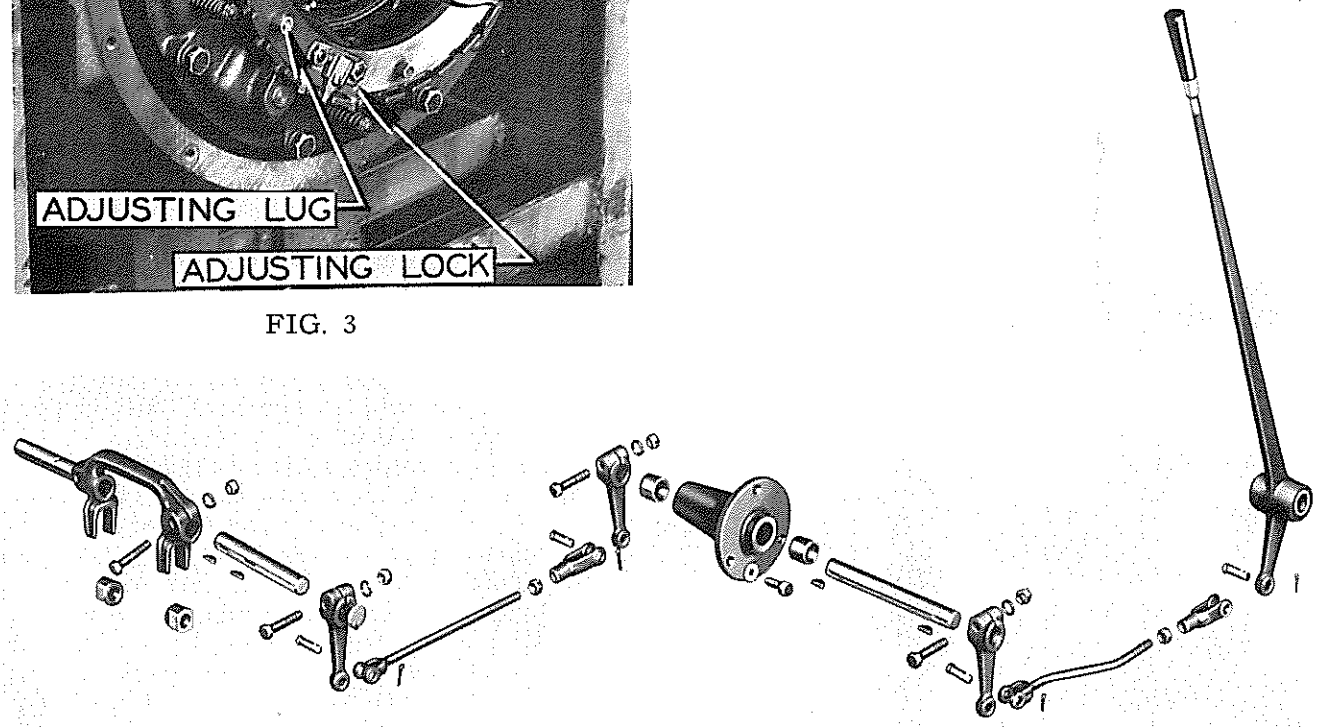

EXPLODED VIEW OF MASTER CLUTCH CONTROL

FIG. 4

101 -- "HD 14" Master Clutch Removal and Installation

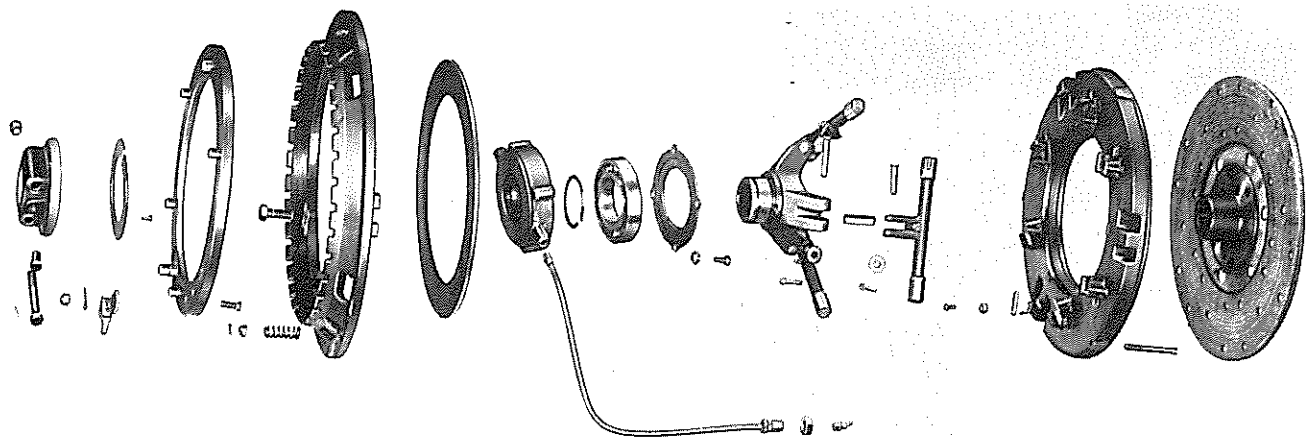

EXPLODED VIEW OF MASTER CLUTCH ASSEMBLY

FIG. 1

A. REMOVAL OF MASTER CLUTCH

1. Remove motor as described in Topic 76.
2. Turn the motor crosswise and lower chain hoist until the weight of the motor rests on engine support.
3. Remove 9 capscrews holding clutch assembly to flywheel.
4. Remove master clutch from flywheel.

B. INSPECTION OF MASTER CLUTCH PARTS

1. Loosen adjusting lock, unscrew adjusting ring plate.

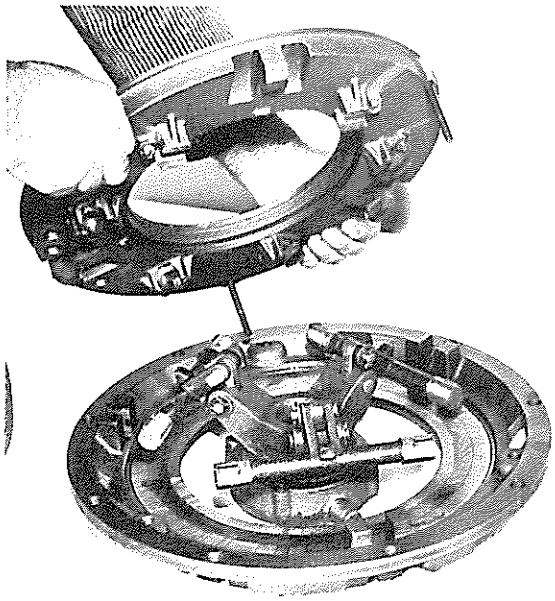

FIG. 2

2. Inspect rollers on end of 3 cam shafts, making sure that they are getting proper lubrication. Inspect all link pins.
3. Inspect pressure plate for wear and warpage. If warped, it can be placed in lathe and machined true; however, not more than $\frac{1}{16}$ of an inch should be removed. Install a new pressure plate if the one removed is warped beyond its limits for machining.
4. Install the cams in position in the pressure plate and examine for excessive wear on the outside surface of the cam guide on pressure plate. If worn so that cams are sloppy, the master clutch will jump out when under load. Also inspect the cam blocks.
5. Inspect return springs and bolts.
6. Inspect clutch release bearing and bearing carrier for excessive wear. To remove bearing, take out 6 capscrews which hold bearing carrier to bearing plate. Remove snap ring on back side of bearing from clutch sleeve. Inspect clutch sleeve for excessive wear.
7. Inspect drive disc assembly. Clutch facings are not serviced separately; therefore when facings become worn to less than $\frac{11}{32}$" thickness, install new drive disc.
8. Inspect pilot bearing for wear and in case of faulty lubrication install new oil wick.
9. Inspect grease tube for breaks and leaks.

"HD-14" ATWOOD MASTER CLUTCH

To adjust Atwood master clutch, turn engine so adjusting lock screw may be reached through one of the master clutch inspection holes. Use a $\frac{9}{16}$" wrench and turn adjusting lock screw counter-clockwise until it is free. Do not try to remove lock screw since it screws into locking gear which locks adjusting ring assembly in position.

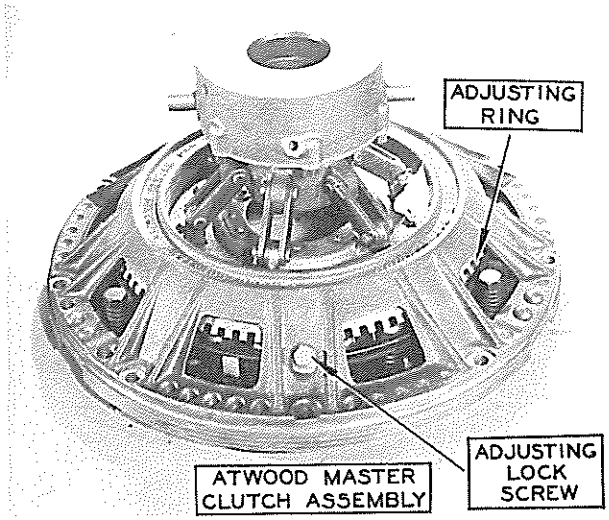

FIG. 3

When lock is free, turn adjusting ring clockwise to tighten.

Adjust clutch until lever pull is approximately 55 to 60 lbs. then lock adjusting ring by tightening adjusting lock screw.

Caution: When it is necessary to replace driven plate assembly, use #047126 Driven Plate Assembly only in the Atwood clutch. There is not enough clearance in the Atwood clutch to use #034902 Drive Disc Assembly.

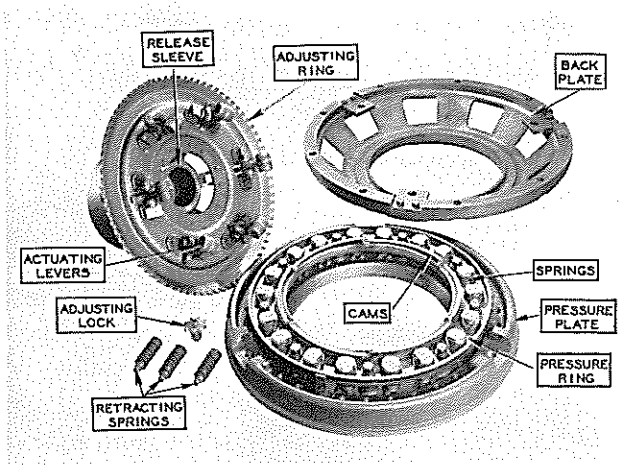

FIG. 4

These drive discs may be identified by length of Hub. "#047126 Drive Disc Hub is 2½", Atwood." "#034902 Drive Disc Hub is 2¾", Rockford."

C. INSTALLATION OF MASTER CLUTCH

1. To assemble master clutch reverse removal procedure.
2. Install clutch assembly on flywheel as outlined in Topic 76-B.
3. Install motor in tractor as described in Topic 76-B.

102 -- "HD 7" Transmission

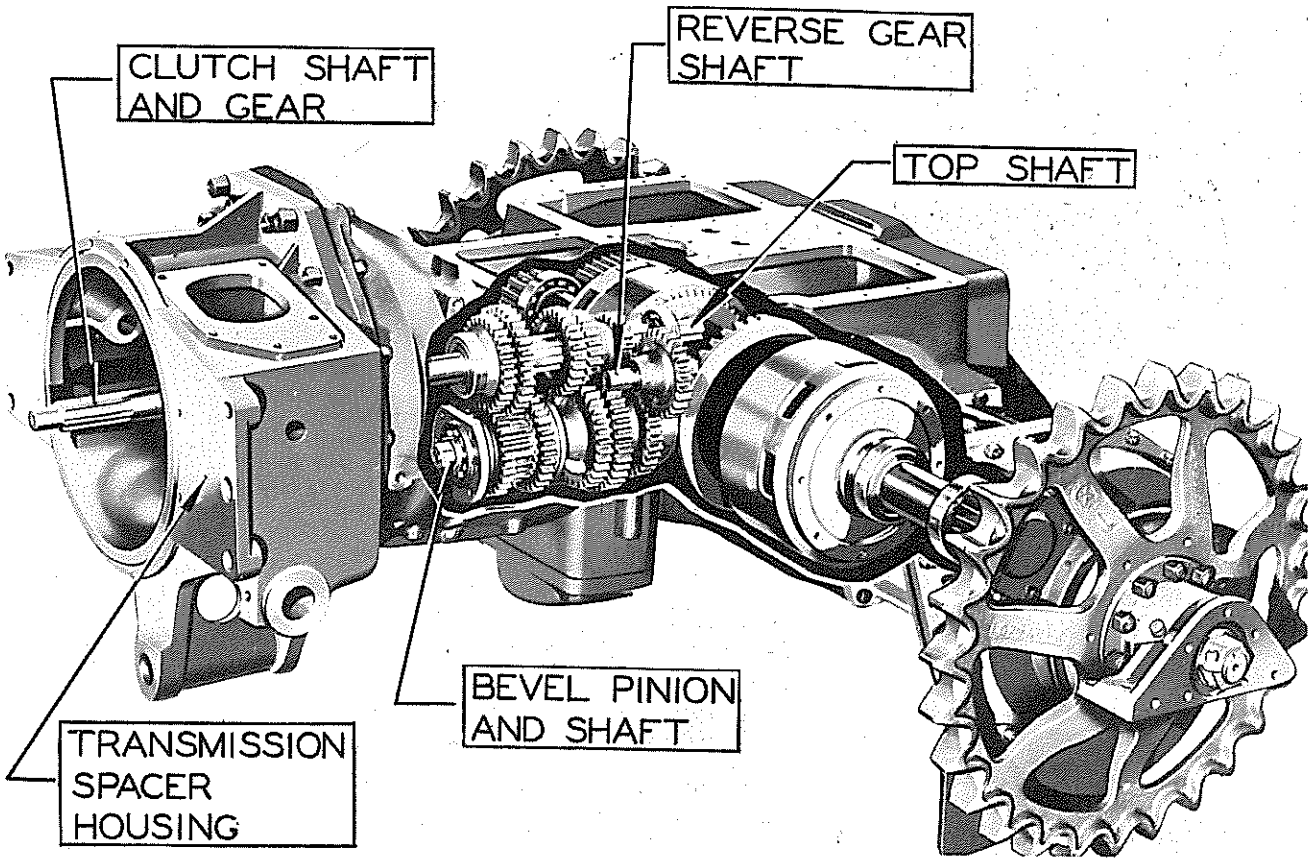

FIG. 1

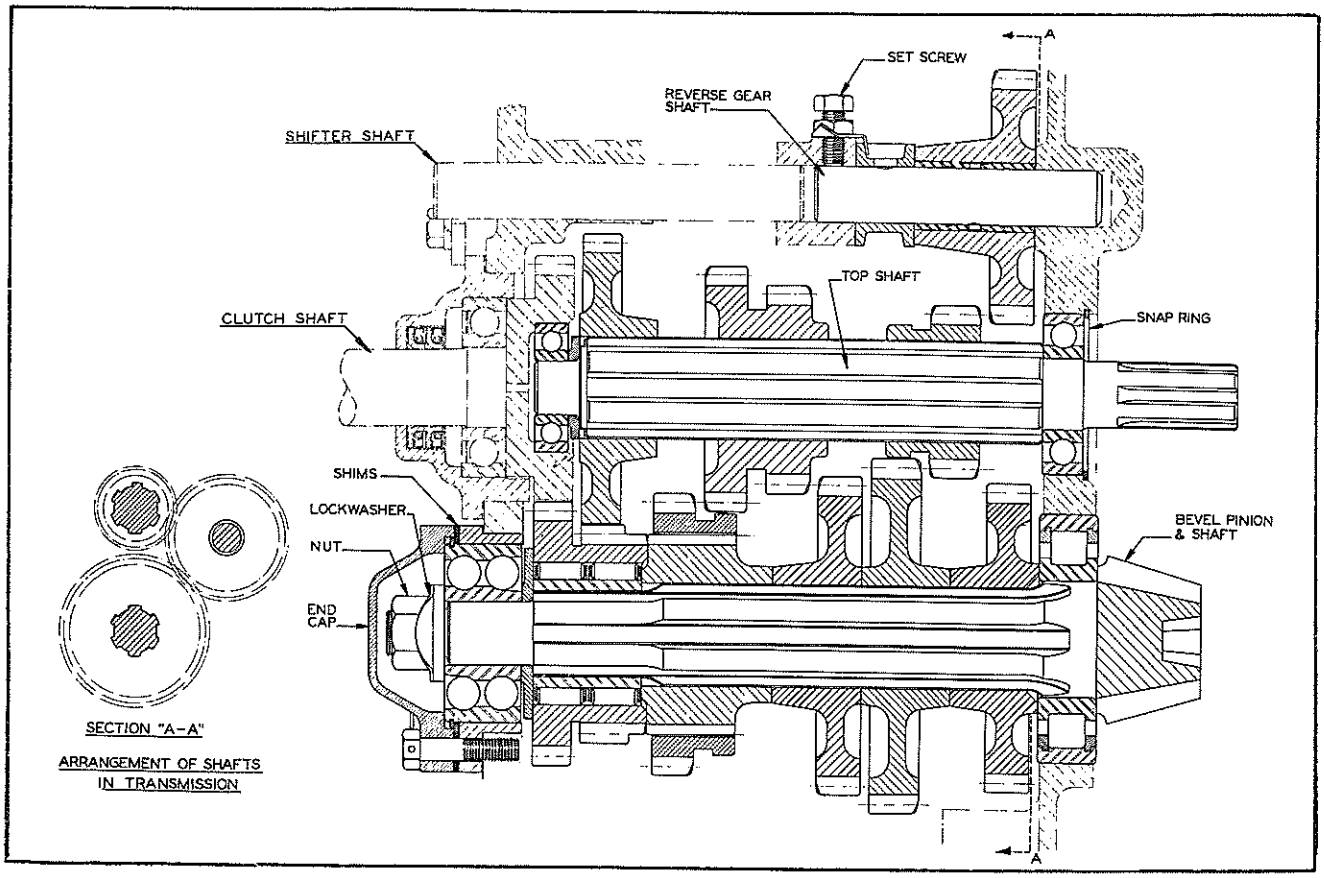

FIG. 2

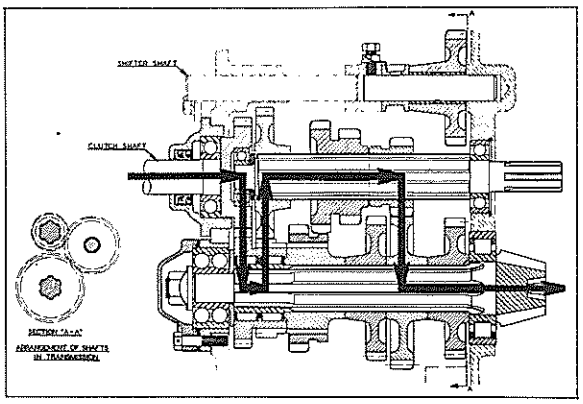

First Gear

FIG. 3a.

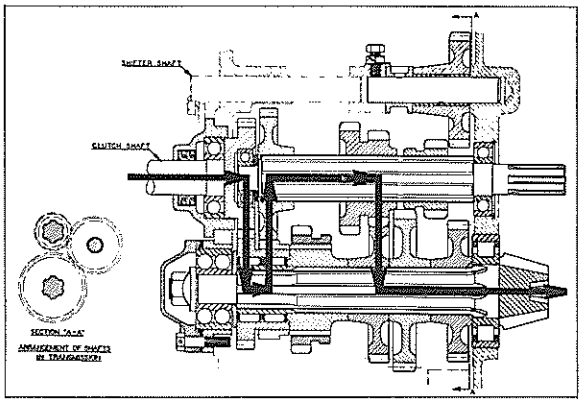

Second Gear

FIG. 3b

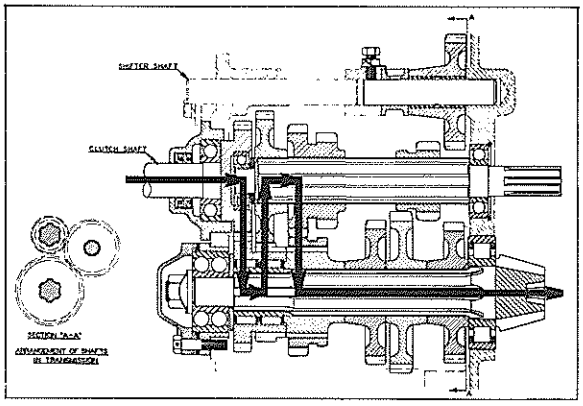

Third Gear

FIG. 3c

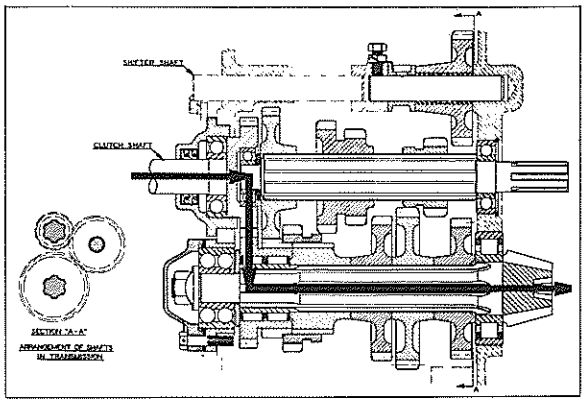

Fourth Gear

FIG. 3d

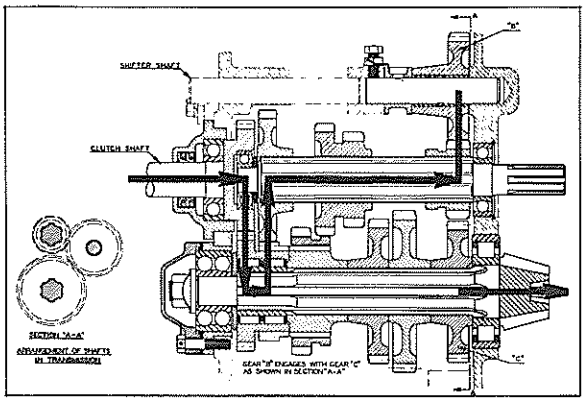

Reverse Gear

FIG. 3e

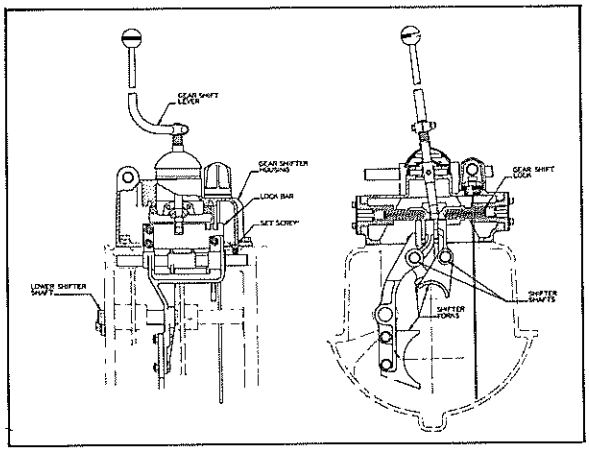

FIG. 4

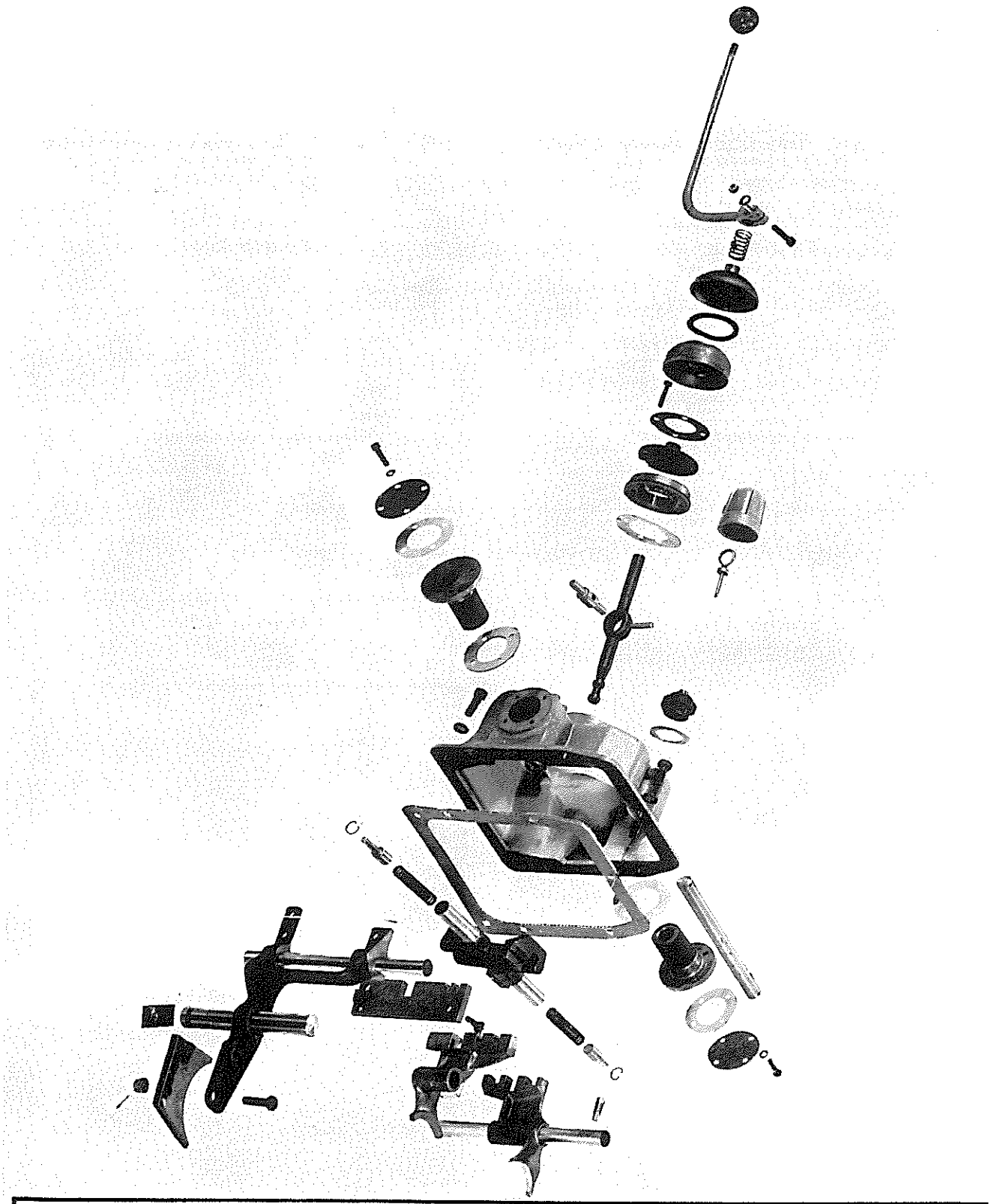

EXPLODED VIEW OF GEAR SHIFT HOUSING ASSEMBLY

FIG. 5

A. REMOVAL OF TOP SHAFT

1. Remove right and left floor plates: 5 bolts in left plate and 4 bolts in right plate.
2. Remove yoke pins from rear end of steering clutch throwout rods. Fig. 7.

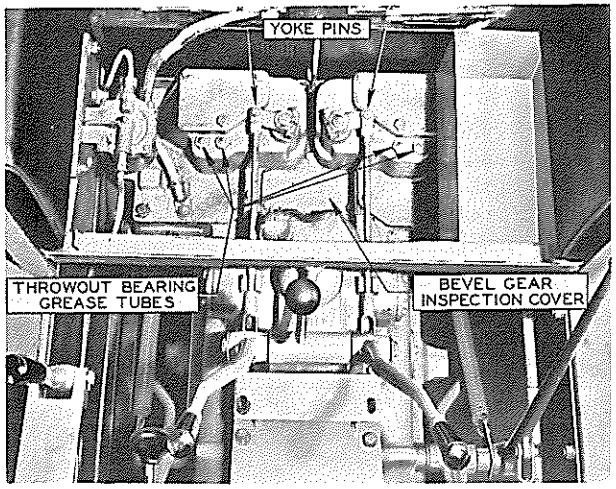

FIG. 7

3. Remove 7 capscrews from gear shifter housing and lift off. Fig. 8.
4. Remove bevel gear inspection cover by taking out three capscrews. Fig. 7.
5. Remove two top shifter shafts by taking out lock wire and removing 2 capscrews in rear end of shafts. Fig. 8.
6. Remove master clutch cover and the lock bolt at front end of lower shifter shaft. Then pull lower shifter shaft out of case.
7. Lift shifter forks out of case.
8. Remove snap ring from rear end of transmission top shaft rear housing. See Fig. 2.
9. Pry on front gear, forcing the top shaft back and bearing out of transmission case then the washer, gears and shaft can be lifted out.

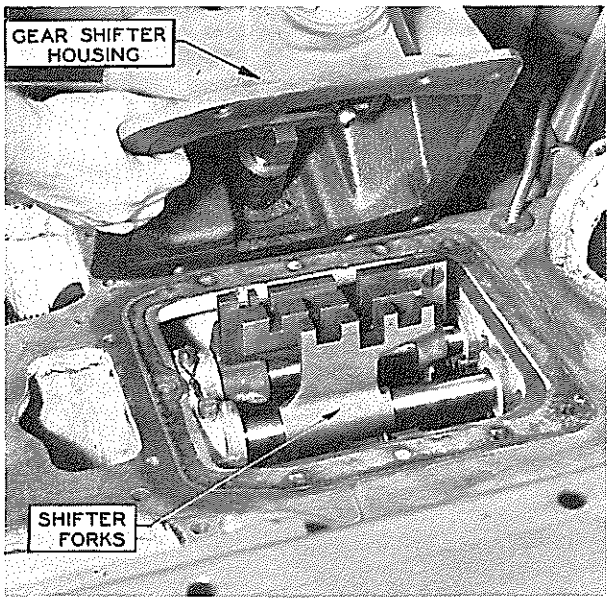

FIG. 8

B. INSTALLATION OF TOP SHAFT

Reverse the procedure given in paragraph "A" above.

C. REMOVAL OF MASTER CLUTCH SHAFT

1. Remove top transmission shaft as outlined under "A".
2. Remove motor as given in Topic 74-A.
3. Remove master clutch brake assembly.
4. Remove rear clutch shaft bearing and cage assembly from front of transmission case.

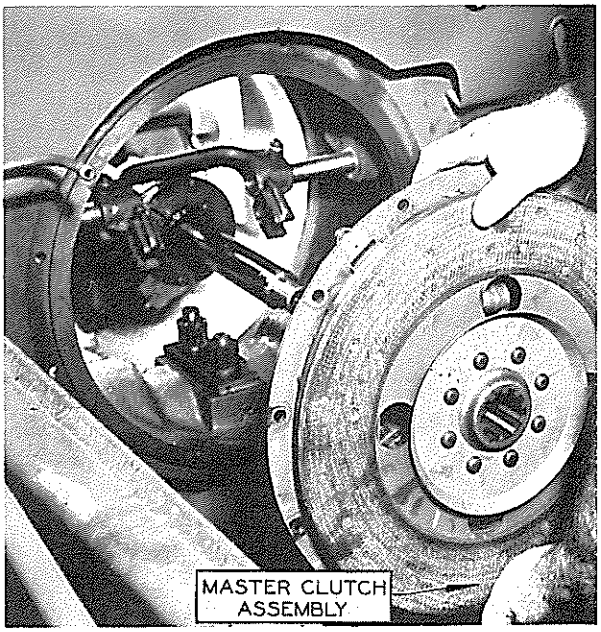

FIG. 9

5. Now the master clutch shaft can be removed, through the opening in top of transmission.
   NOTE: On the first production tractors, when trying to remove the shaft, the front end of shaft would strike the bottom of motor spacer, and not allow it to lower, at that point, far enough to be removed; in this case, proceed as follows:
6. Remove 5 capscrews holding front end of rear fenders to engine support, 3 on left side and 2 on right side.
7. Remove 2 capscrews, one from each side, on bottom, at front end of cowl fastened to engine support.
8. Block up front end of engine support.
9. Place blocking and jack under front end of transmission.
10. Remove 18 bolts holding spacer assem-

bly to transmission case.

11. Place a pry between the spacer and transmission case; pry apart enough to allow the front end of transmission case to be jacked up.
12. Jack up front end of transmission enough to allow the master clutch shaft to be removed.

D. INSTALLATION OF MASTER CLUTCH SHAFT

Reverse the procedure described in Removal.

E. REMOVAL OF REVERSE IDLER GEAR

1. Remove lower shifter shaft as described in Topic 102-A, Items 1 to 7.
2. Screw 5/8" N.C. capscrew into end of reverse gear shaft, straighten lock and loosen jam nut. Remove set screw in front end of shaft and pull shaft out by pulling on the 5/8" capscrew.
3. Remove spacer and idler gear assembly.

F. INSTALLATION OF REVERSE IDLER GEAR

Reverse the procedure described in Removal. (Make sure oil hole in shaft is on top and set screw will fit in countersunk hole.)

G. REMOVAL OF SPIRAL BEVEL GEAR AND SPIRAL BEVEL PINION

1. Remove top shaft as described in Topic 102-A.
2. Remove clutch shaft as described in Topic 102-C.
3. Remove steering clutches as described in Topic 105-C.
4. Straighten locks and remove nuts from 12 bolts holding spiral bevel gear to bevel gear hub.

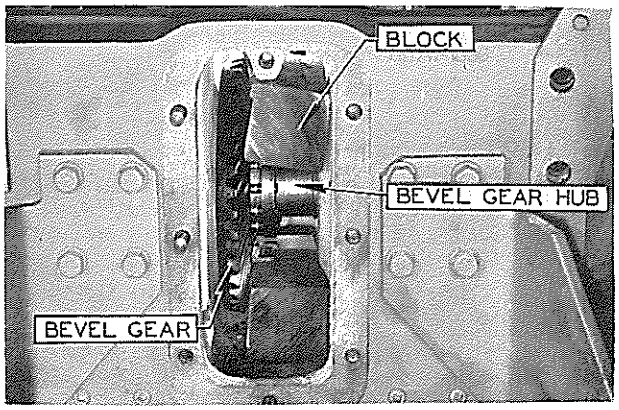

FIG. 10

5. Block bevel gear between gear teeth and transmission case.
6. Remove bearing retainers by removing 12 capscrews. Fig. 16.
7. Place piece of hardwood against end of hub and drive from left side.

   NOTE: In some cases the bevel gear hubs do not drive out very easy. When this occurs the final drive pinion puller can be used. This can be accomplished by disassembling the pinion puller and making a heavy washer which will fit next to the welded nut on puller shaft, then pushing the threaded end through the hub and out from the sprocket. Install the pedestal and spacer and use the nut to pull the hub. Before pulling is started, two blocks of hardwood must be placed between the bevel gear teeth and transmission case to hold the bevel gear solid and away from the bevel pinion, so that it will not bind when pulling the hub out of case and bevel gear off the hub, which is all one operation. This same method can be used for reassembling, by reversing the removal procedure.
8. Now gear, hub, and bearings can be removed. Be sure to keep bearing retainers and shims on the side they are removed from.

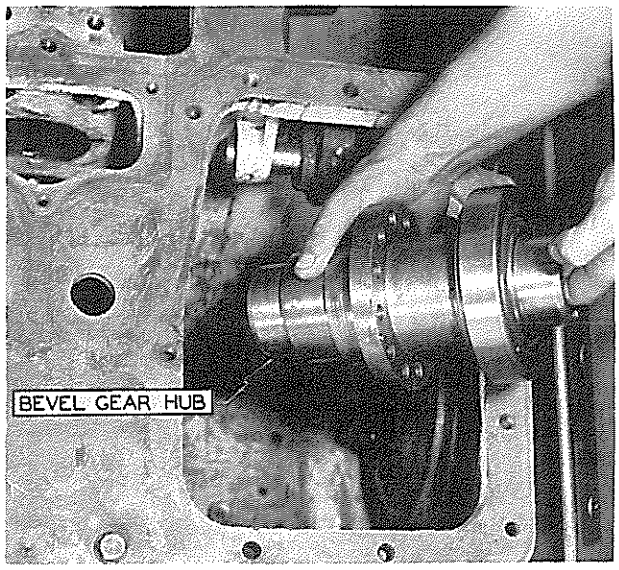

FIG. 11

9. Remove lockwire and 4 capscrews holding cap over front end of pinion shaft. Fig. 2.
10. Straighten lockwasher and remove nut. Then pinion can be removed from case by driving toward rear.
11. Now gears and roller bearing assembly can be removed from the case.

H. INSTALLATION OF SPIRAL BEVEL GEAR AND SPIRAL BEVEL PINION

NOTE: Refer to Topic 103 — HD 10 - Transmission, Paragraph L for details on inspection and installation.

The correct position for the setting of the spiral bevel pinion has been determined on the gear testing machine at the factory.

NOTE: Two methods of marking pinion shafts are used as shown in the following outline.

1. The theoretical correct distance from

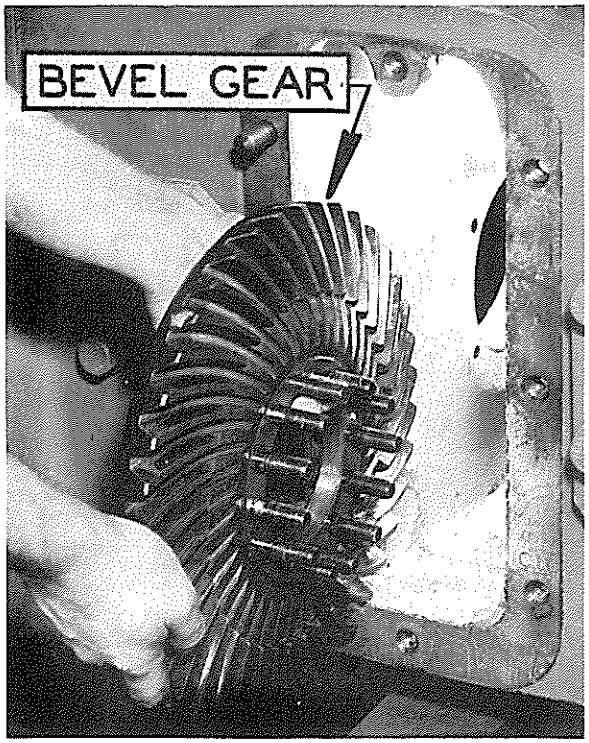

FIG. 12

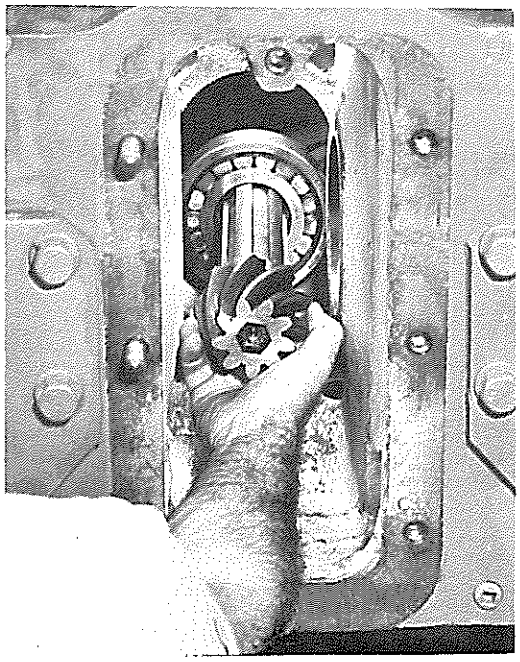

FIG. 13

center of bevel gear shaft to small end of pinion is 4.322 inches; on the small end of pinion is marked a dimension showing how much this particular pinion differs from this dimension.

a. Reverse procedure — "Removal of Spiral Bevel Gear and Spiral Bevel Pinion."
b. Measure the diameter of the bevel gear hub with micrometers. (This means the outer diameter of the hub flange to which the gear is bolted.) Divide the measurement by 2 and subtract this distance from the theoretical distance—4.322. See Fig. 14.
c. Add or subtract the dimension marked on the small end of the pinion from the above result. (The dimension on the end of the pinion may be plus or minus; this fact is determined at the factory and is marked accordingly.)
d. Set inside micrometers or telescope gauge to the last dimension obtained and set pinion as shown in Fig. 14 from outer diameter of hub flange.

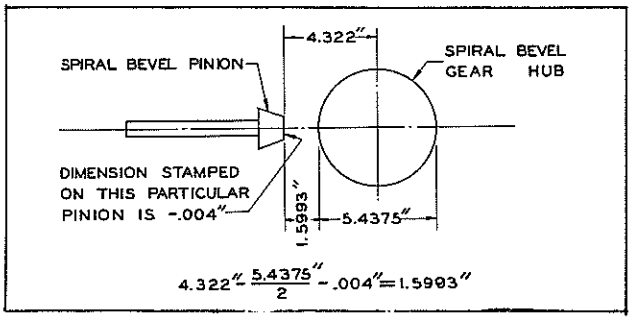

FIG. 14

EXAMPLE:

$$4.322 - \frac{\text{diameter}}{2} - .004 =$$

$$4.322 - \frac{5.4375}{2} - .004 = 1.5993''$$

e. Now set inside micrometer to 1.5993 and set pinion as shown in Fig. 14 by adjusting shims underneath bearing cage front end of bevel pinion shaft.

2. In some cases the dimension etched on end of pinion shaft may be, for example, 4.337", instead of —.004" as shown above. In this case proceed as follows, to obtain correct adjustment.
   a. Measure the outer diameter of the bevel gear hub with micrometer.

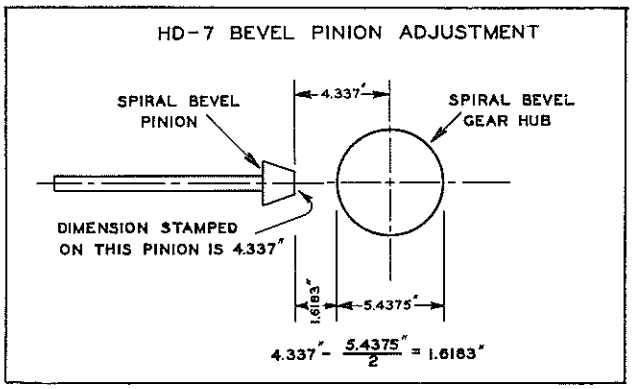

FIG. 15

This means the outer diameter of the hub flange to which the gear is bolted. Divide this measurement by 2 and subtract from the figure etched on end of pinion shaft, which is 4.337″. The result obtained is the distance that the end of pinion shaft should be from bevel gear hub flange. See Fig. 15.

b. EXAMPLE: Pinion is marked 4.337″. Bevel gear hub measures 5.4375.

$$4.337'' - \frac{5.4375}{2} = 1.6183''$$

c. 1.6183″ is correct distance between end of pinion shaft and bevel gear hub flange.

d. Now set inside micrometers to 1.6183 and set pinion shaft as in Fig. 15 by adjusting shims under bearing cap at front end of bevel pinion shaft.

e. Bring spiral bevel gear and spiral bevel pinion into mesh by removing shims on one side of hub bearings and installing on other side. Fig. 16. A backlash of .006 to .011 inches should be allowed.

NOTE: While adjusting the bevel gear bearings, the hub should be bumped from end to end. This places the bearing cups in the correct position when adjustments are being made.

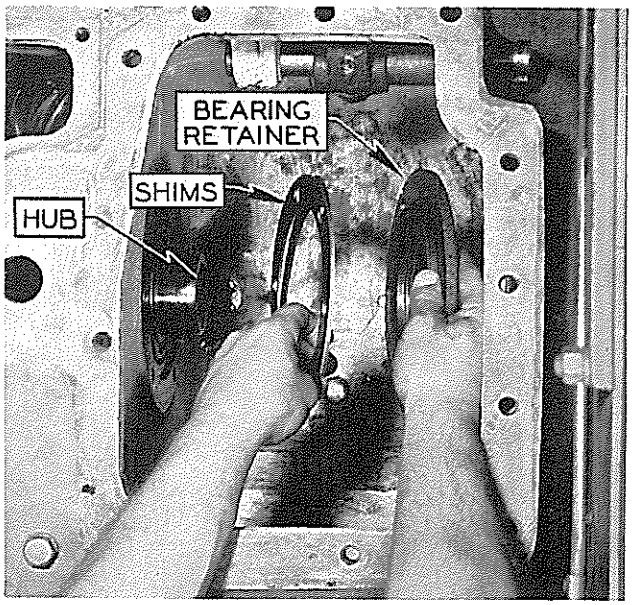

FIG. 16

I. BEVEL GEAR PACKING

1. The bevel gear packing should only be tightened enough to stop the leak. Tighten by turning the adjusting nut clockwise.
2. When the packing adjusting nut screws all the way in, new packing should be installed.

J. BEVEL GEAR SEALS (NON ADJUSTABLE)

1. On late production tractors there is a spring loaded oil seal.
2. When seal becomes worn and leaks, a new seal will have to be installed.

103 -- "HD 10" Transmission

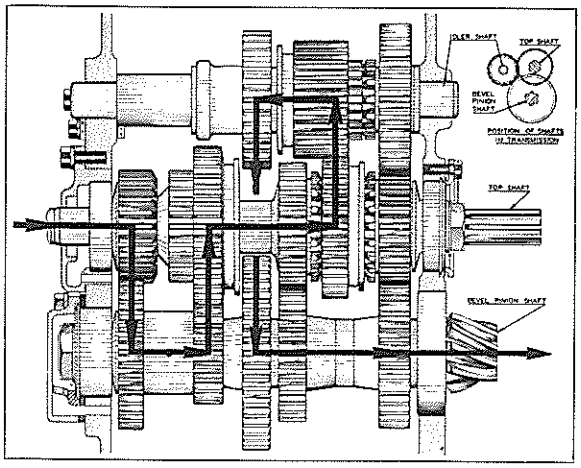

Low Reverse

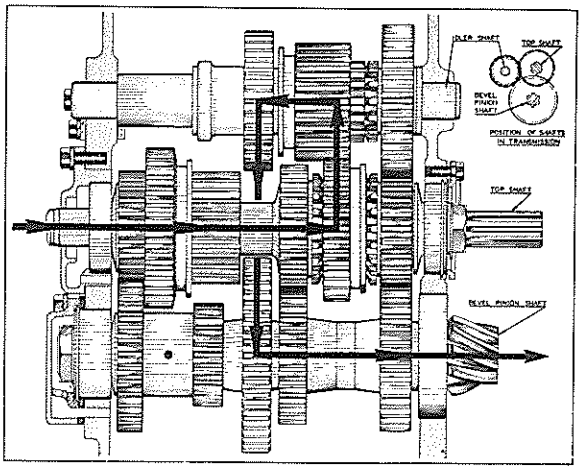

High Reverse

FIG. 1

"HD 10" Transmission

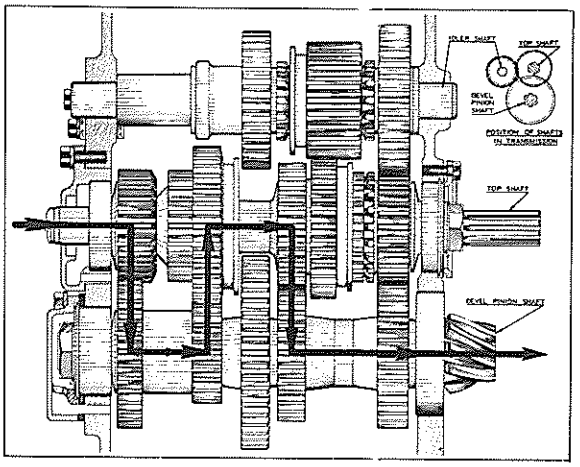

First Gear

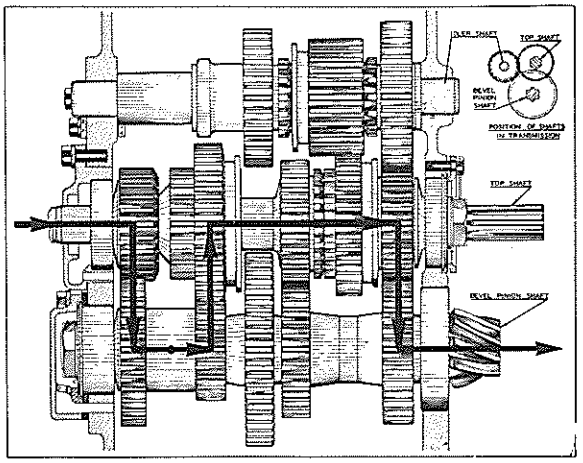

Fourth Gear

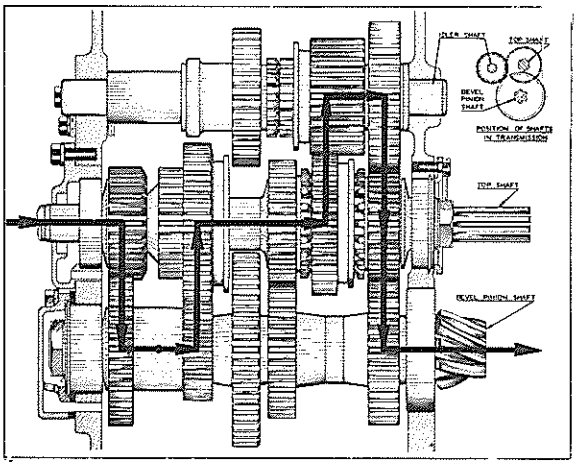

Second Gear

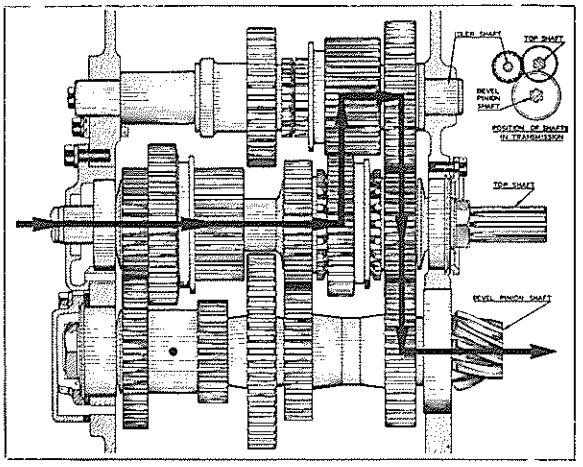

Fifth Gear

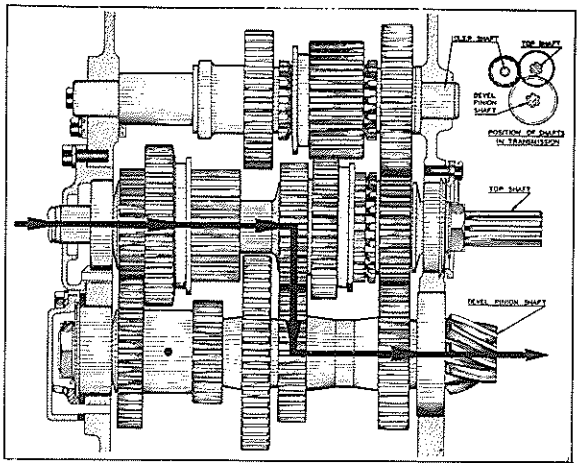

Third Gear

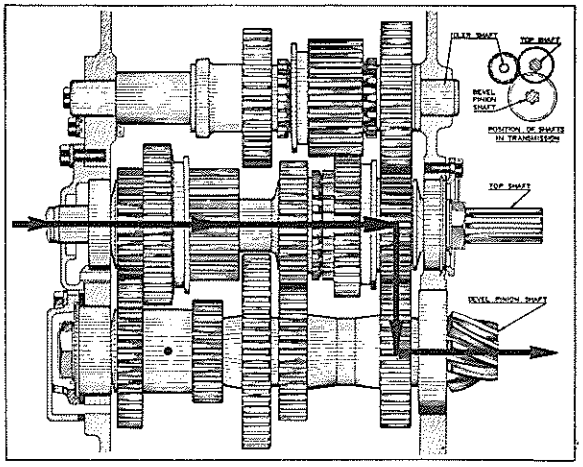

Sixth Gear

FIG. 2

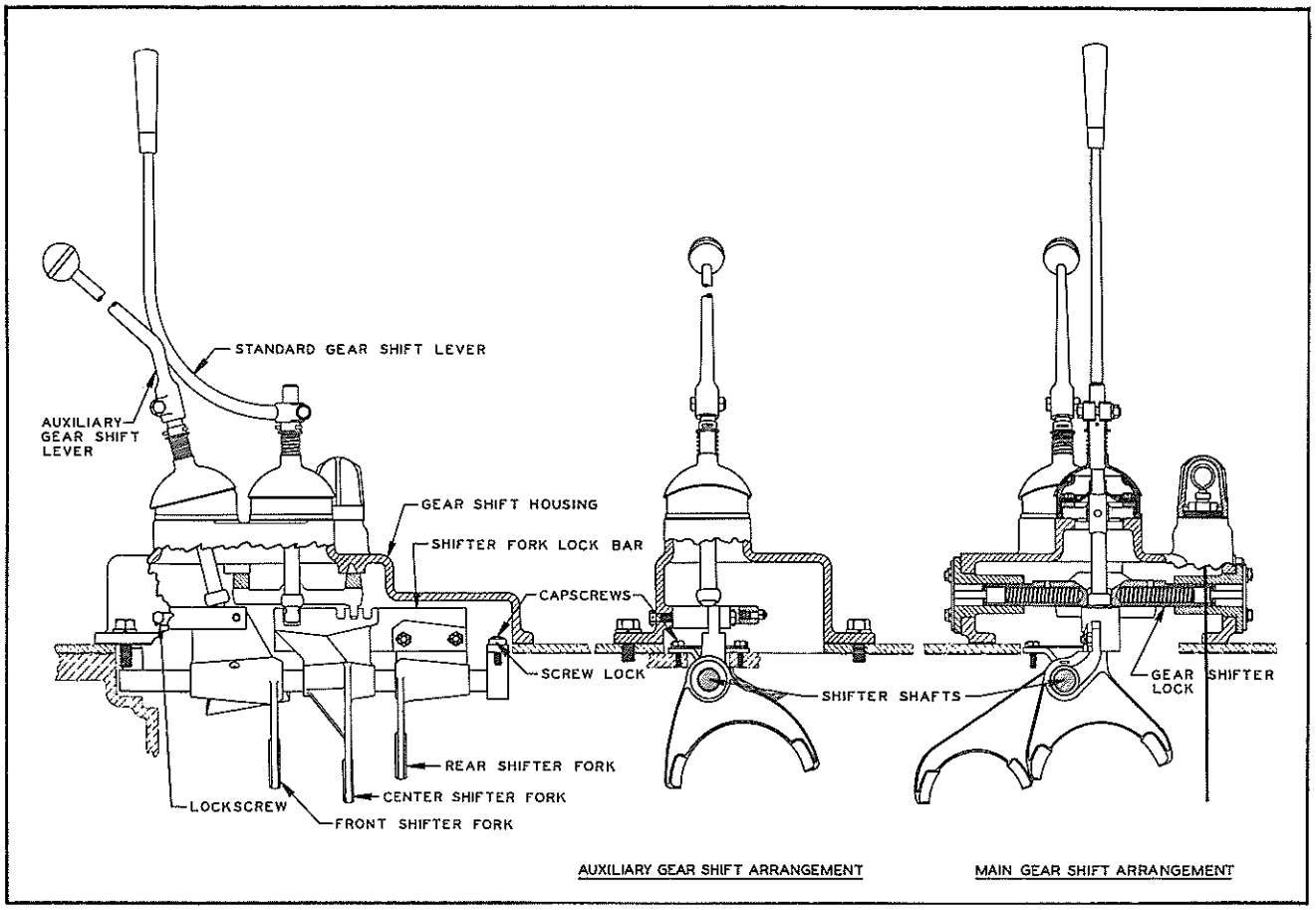

FIG. 3

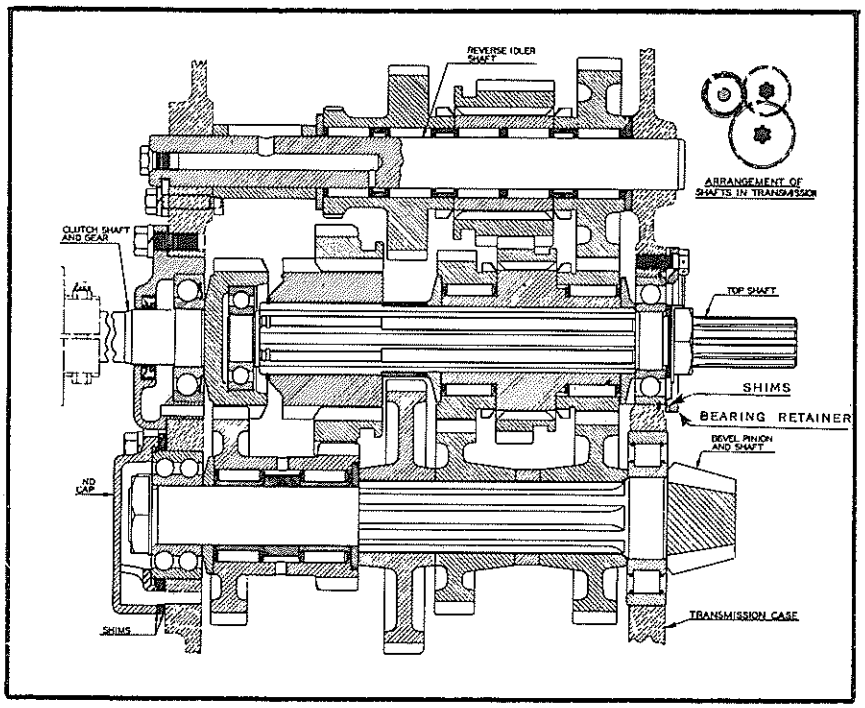

FIG. 4

NOTE: Effective on transmission parts as follows:

HD10-1502—A change was made in the top shaft and snap ring.

HD10-1742—A change was made in the front sliding gear hub.

HD10-1785—A change was made in some of the transmission gears, bevel gear and bevel pinion shaft.

Refer to latest HD10 parts book, when ordering parts.

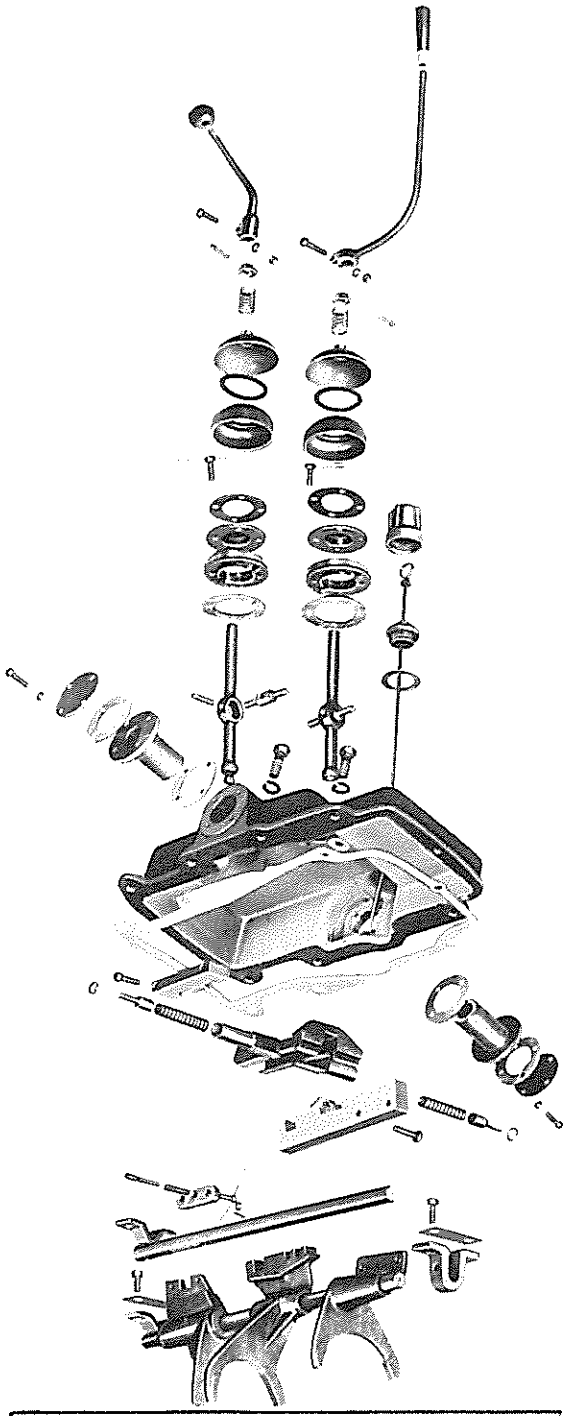

EXPLODED VIEW OF GEAR SHIFT HOUSING ASSEMBLY

FIG. 5

A. REMOVAL OF MASTER CLUTCH SHAFT

1. First, shift auxiliary lever in forward position.
2. Remove motor as described in Topic 75-A.
3. Remove 4 capscrews in bearing cage and pull shaft and gear from case, see Fig. 6.

B. INSPECTION

Inspect all parts; install new parts where necessary.

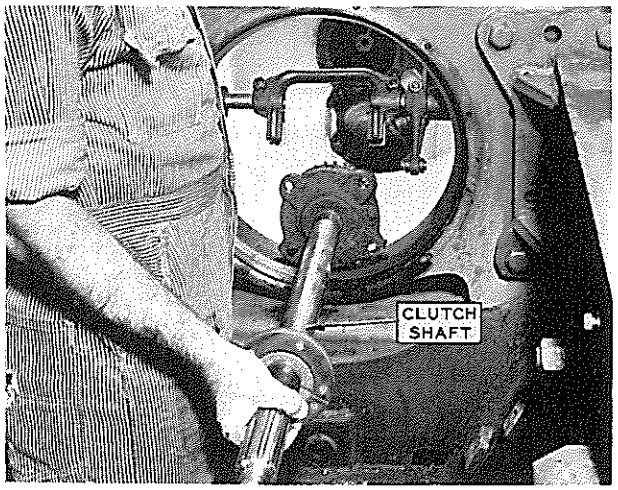

FIG. 6

C. INSTALLATION OF MASTER CLUTCH SHAFT

1. Reverse dismantling procedure, described in Topic 103-A.
2. To adjust master clutch brake engage the clutch and set the face of the brake $1\frac{1}{16}$" to $1\frac{1}{8}$" from the back of the release bearing carrier.

D. REMOVAL OF TOP SHAFT

1. Drain transmission.
2. Remove master clutch shaft, described in Topic 103-A.
3. Perform steps 1 to 14 inclusive in steering clutch removal, described in Topic 106-A.
4. Remove 2 capscrews in steering clutch lever stop.
5. Remove 6 capscrews in floor plate.
6. Remove pins from front end of brake rods on both sides.
7. Remove pin from lower end of master clutch lever.

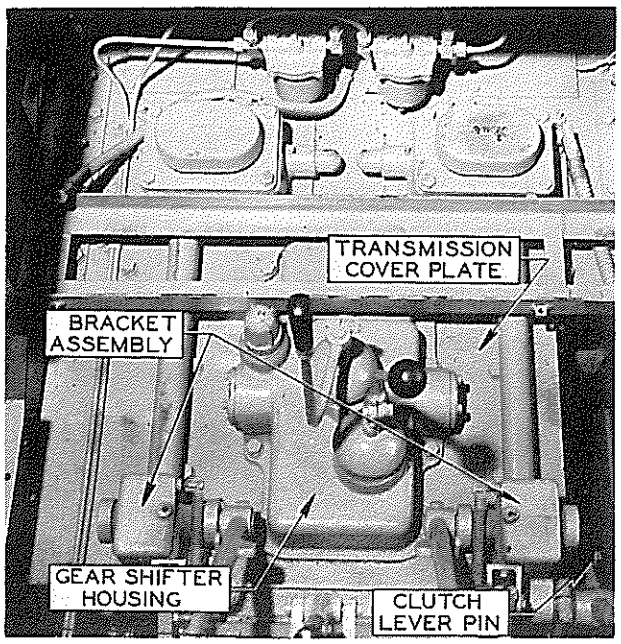

FIG. 7

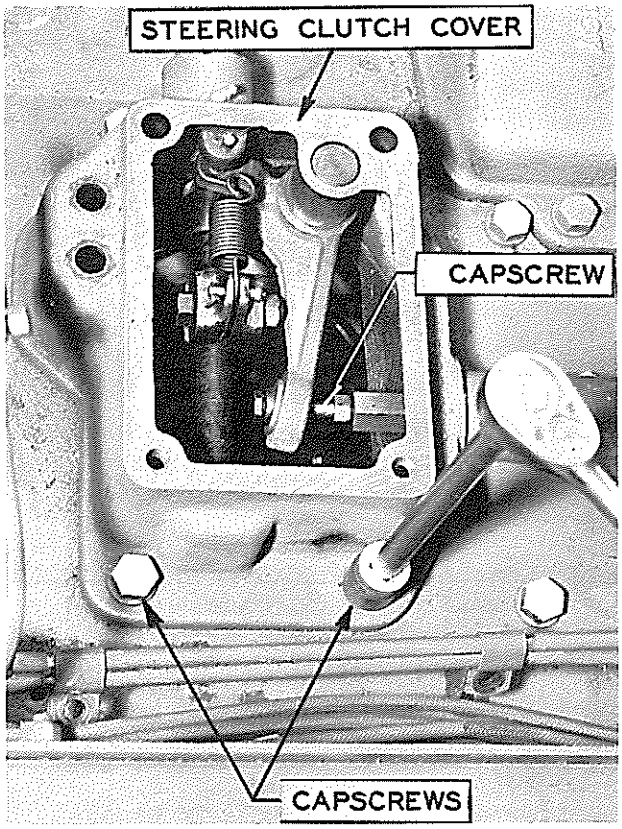

FIG. 8

8. Remove steering clutch lever and foot pedal bracket assembly by taking out 4 capscrews in each.
9. Remove 7 capscrews and remove gear shift housing.
10. Straighten locks and remove 4 capscrews from shifter fork assembly. This assembly can now be removed.
11. Remove top cover plate by taking out remaining 4 capscrews.
12. Straighten lockwasher and remove nut from rear end of top shaft.
13. Move shaft forward through the hole in front end of case. Now gears, spacers and bearing can be removed from the case.
14. Remove top shaft rear bearing and bearing retainer from case by taking out lockwire and 4 capscrews. Fig. 5.

E. INSPECTION OF TOP SHAFT

Inspect all parts; install new parts where necessary.

F. INSTALLATION OF TOP SHAFT

1. Assemble on bench, snap ring, front bearing, gears and spacers in their proper place on shaft. Use a spacer the same width as the back top shaft bearing, in place of bearing. Screw nut on shaft to hold complete assembly tight in place.
2. Now assembly can be lowered into top of case.
3. Install master clutch shaft in its proper place and tighten capscrews holding bearing cage.
4. Push top shaft forward until front end has entered bearing in clutch shaft gear.
5. Remove nut and spacer from rear end of shaft.
6. Install bearing, spacer, lockwasher and nut, and then tighten. Now bend lockwasher to hold nut.
7. Install bearing retainer and capscrews; lock capscrews with wire.
   NOTE: Shims shown between bearing retainer and rear top shaft bearing (Fig. 4) are used as required to provide clearance between bearing retainer and transmission case. This clearance is necessary to make sure that snap ring on bearing, bottoms in counterbore of transmission case.

G. REMOVAL OF REVERSE IDLER SHAFT

1. Remove seat cushions.
2. Remove seat frame by taking out one bolt in each corner.
3. Remove 6 capscrews on battery hold-down.
4. Disconnect cables at battery terminals and remove batteries.
5. Remove battery support by taking out 2 bolts in each end.
6. Remove steering clutch lever stop by taking out 2 capscrews. Remove floor plate cover.
7. Remove floor plate by taking out 6 capscrews holding it down and 2 bolts holding it to front of seat frame.
8. Remove master clutch inspection cover.
9. Remove gear shifter assembly and housing by taking out 7 capscrews.
10. Straighten locks and remove 4 capscrews and shifter fork assembly.
11. Remove capscrew and reverse idler shaft lock at front end of shaft. Fig. 5.
12. Remove shaft plug and install capscrew in place of plug.
13. Shaft can be pulled out toward front by prying on head of capscrew with bar, far enough to allow gears, bearings, washers, etc. to be taken from case.

H. INSPECTION OF REVERSE IDLER SHAFT

Inspect all parts; install new parts where necessary.

I. INSTALLATION OF REVERSE IDLER SHAFT

Reverse removal procedure making sure that lock screw in front lines up with hole in front spacer.

J. REMOVAL OF BEVEL GEAR AND BEVEL PINION SHAFT

1. Remove top shaft, described in Topic 103-D.
2. Remove steering clutch, described in Topic 106.
3. Remove center rear cover from transmission case.

4. Straighten locks and remove nuts from 12 bolts holding bevel gear to hub.
5. Remove right and left bearing retainers by removing 4 capscrews in each, making sure to keep retainers and shims on their proper sides.
6. Place blocks between transmission case and bevel gear teeth to hold gear solid and away from the bevel pinion.
7. Place hardwood block over end of bevel gear hub; place bar through final drive pinion hole from outside against hardwood block and drive hub assembly out through right side.
   NOTE: In some cases the bevel gear hubs do not drive out very easy. When this occurs, the final drive pinion puller can be used. This can be accomplished by disassembling the pinion puller and making a heavy washer which will fit next to the welded nut on puller shaft, then pushing the threaded end through the hub and out through the sprocket. Install the pedestal and spacer and use the nut to pull the hub from bevel gear. Before pulling is started, two blocks of hardwood must be placed between the bevel gear teeth and transmission case to hold the bevel gear solid and away from the bevel pinion, so that it will not bind when pulling the hub out of the case and bevel gear off the hub, which is all one operation. This same method can be used for reassembling, by reversing the above procedure.
8. Then remove bevel gear from case.

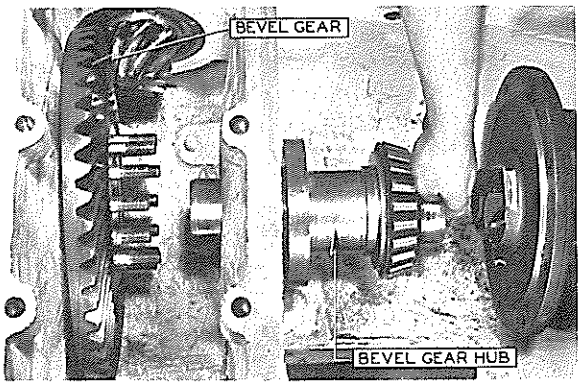

FIG. 9

9. Remove 4 capscrews and end cap from end of bevel pinion and shaft. Fig. 5.
10. Straighten lockwasher and remove nut from end of shaft.
11. Move bevel pinion shaft back until all gears, spacers and bearings may be removed from shaft.
12. Remove front and rear bearing from the case.

K. INSPECTION OF BEVEL PINION SHAFT AND BEVEL GEAR

Inspect all parts; install new parts where necessary.

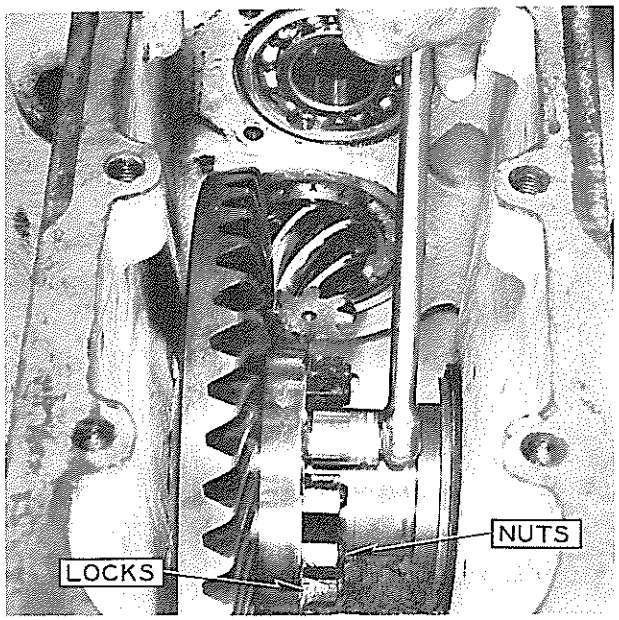

FIG. 10

L. INSTALLATION OF BEVEL GEAR AND BEVEL PINION SHAFT

1. Install rear bearing on bevel pinion shaft.
2. Install pinion shaft in case from rear, placing gears, spacers and bearings on shaft in their respective place.
3. Push shaft through until bearing lockwasher and nut can be put on shaft; tighten nut securely and lock.
   NOTE: It is necessary to provide a running clearance between the washer and spool gear. Maximum clearance, .030", minimum, .020". Use .010" shims. The number of shims required can be determined before pinion shaft is installed in transmission by assembling washer, spool gear, roller bearing, bearing race, spacer, and washer, on the small end of the shaft in their respective positions and making proper adjustment by the use of .010" shims. After correct clearance has been obtained, remove parts from shaft and proceed with reassembly. Refer to Fig. 4.
4. Install end cap and capscrews holding shaft in place.
5. Install 2 bolts in bevel gear directly opposite; making sure bolt heads are in such a position they will not interfere with hub.
6. Install hub through bevel gear from right side and put nuts on the two bolts that are in place.
7. Now install all bolts in bevel gear and hub.
8. Remove the 2 nuts and install nut locks on all bolts; tighten nuts securely and lock.
9. Install roller bearing assemblies and cups.

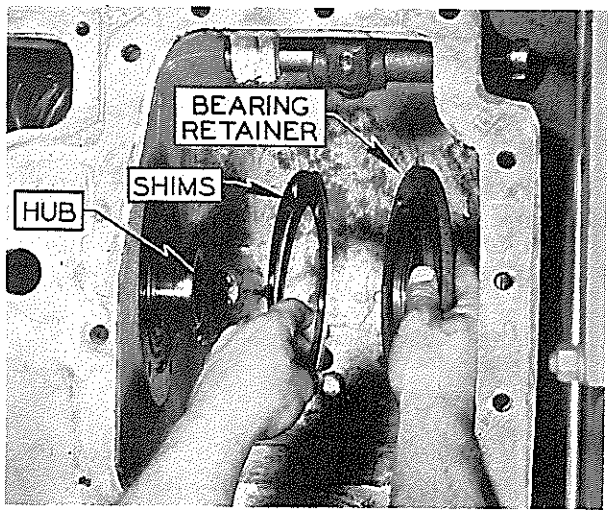

FIG. 11

10. Install bearing retainers and shims in their respective places.
11. Adjust the bevel gear hub bearings. Remove or add the necessary number of shims on each side until the bevel gear hub bearings have a free running fit. Be sure to remove the same thickness of shims from each side when only the bearings are being adjusted.
    Removing shims from the left side and installing them on the other side moves the bevel gear closer to the bevel pinion; for this reason it is necessary that, when adjusting bearings, caution must be taken so that the adjustment of the bevel is not changed.

NOTE: While adjusting the bevel gear bearings, the hub should be bumped from end to end to place the bearing cups in the correct position.

M. ADJUSTMENT OF BEVEL GEAR

The correct position for setting the spiral bevel pinion has been determined on the gear testing machine at the factory.

NOTE: There are 2 methods of marking the bevel pinion shaft as seen in the following outline under No. 1 and 2.

1. The theoretical correct distance from center of bevel gear shaft to small end of pinion is 5.229 inches; on the small end of pinion is marked a dimension showing how much this particular pinion differs from this dimension.
   a. Measure the outer diameter of the bevel gear hub with a micrometer. (This means the outer diameter of the hub flange to which the gear is bolted.) Divide the measurement by 2 and subtract this distance from the theoretical distance—5.229. Fig. 12.
   b. Add or subtract the dimension marked on the small end of the pinion from the above result. (The dimension on the end of the pinion may be plus or minus; this fact is determined at the factory and is marked accordingly.
   c. Set inside micrometer or telescope gauge to the last dimension obtained and set end of pinion this distance from outer diameter of hub flange to which the gear is bolted.

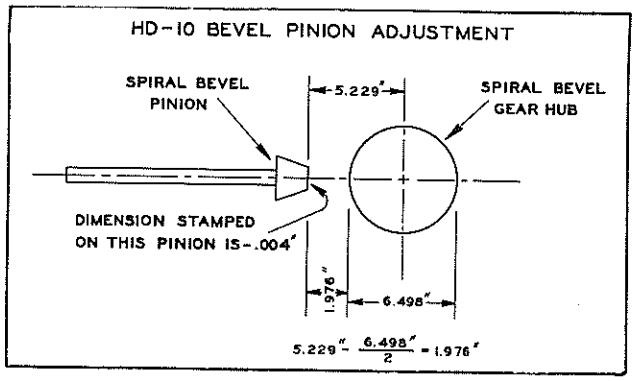

FIG. 12

EXAMPLE:

$$5.229'' - \frac{\text{diameter}}{2} - .004 =$$

$$5.229'' - \frac{6.498}{2} - .004 = 1.976''$$

   d. Now set inside micrometer to 1.976 and set pinion as shown in Fig. 12. by adjusting shims underneath cover plate at the front end of the bevel pinion shaft.
2. In some cases, the dimension etched on end of the pinion shaft may be, for example 5.248" instead of —.004" as shown above. In this case proceed as follows, to obtain correct adjustment:
   a. Measure the diameter of the bevel gear hub with micrometer. Divide this measurement by 2 and subtract from the figure etched on end of pinion shaft. The result obtained is the distance that the end of the pinion shaft should be from bevel gear hub. See Fig. 13.

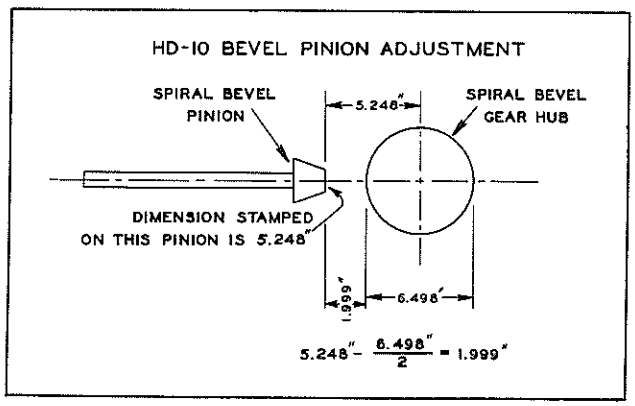

FIG. 13

b. EXAMPLE:
Pinion is marked 5.248". Bevel gear hub measures 6.498".

$$5.248'' - \frac{6.498}{2} = 1.999''$$

1.999" is correct distance between end of pinion shaft and bevel gear hub.

c. Now set inside micrometer to 1.999" and set pinion as shown in Figure by adjusting shims under cover plate at the front end of the bevel pinion shaft.

3. Bring spiral bevel gear and spiral bevel pinion into mesh by removing shims on one side of hub bearings and installing on other side. See Fig. 11, "HD 10" Transmission." A backlash of .006 to .011 inches should be allowed.
4. Reverse the removal procedure for reassembling the tractor.

104 -- "HD 14" Transmission

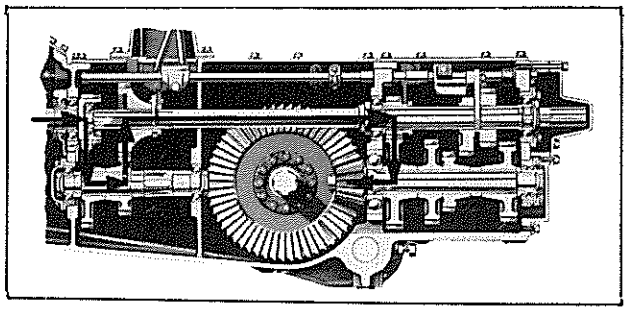

First Gear

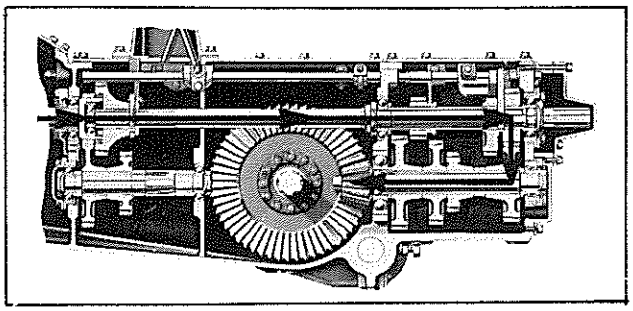

Fourth Gear

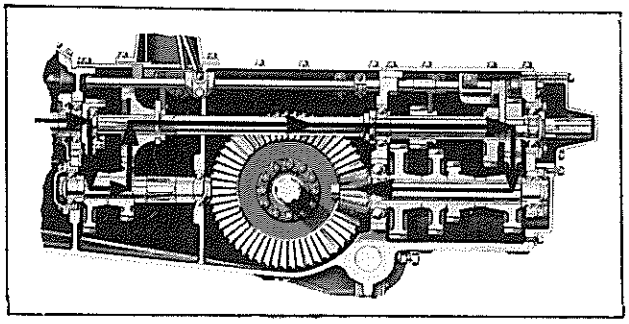

Second Gear

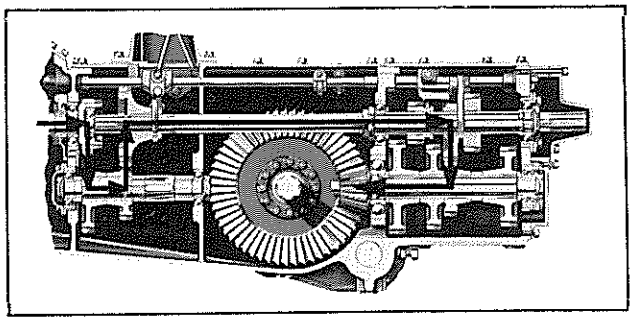

Fifth Gear

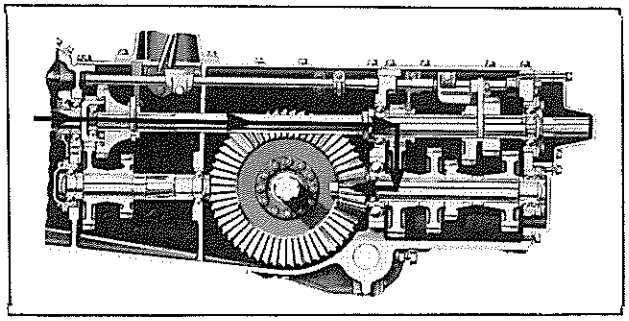

Third Gear

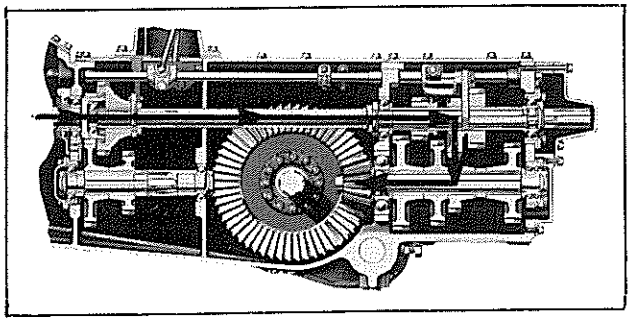

Sixth Gear

FIG. 1

A. REMOVAL OF SLIDING GEAR SHAFT AND SHIFTER SHAFTS

1. Drain the transmission.
2. Dismantle tractor as described in Topic 107.
3. Remove oil gauge cap and rod.
4. Remove 5 capscrews. Take off gear shift housing and base plate.
5. Unhook brake pedal lock rods at latch levers.
6. Unhook large and small brake lever springs.
7. Remove 2 bolts from latch lever locks on brake pedals.

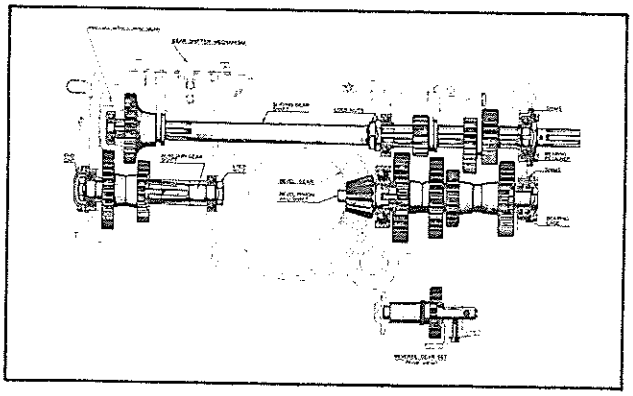

FIG. 2

8. Remove pins from front end of brake pedals.
9. Remove 2 capscrews and 2 bolts from steering lever brackets.
10. Remove center floor support angle by removing 3 capscrews.
11. Now the assemblies can be removed.
12. Remove 3 capscrews and 1 nut on rear transmission tie rod bracket and remove brackets.
13. Now remove remaining capscrews and transmission top cover.
14. Remove 8 capscrews in rear top cover plate. Fig. 3.
15. Remove 5 capscrews from rear cover cap. Fig. 3.
16. Remove the remaining capscrews and the rear case cover.
17. Place shifter shaft in neutral position. Take straight edge and place across center of shifter shaft bracket, marking each side of transmission case so you will

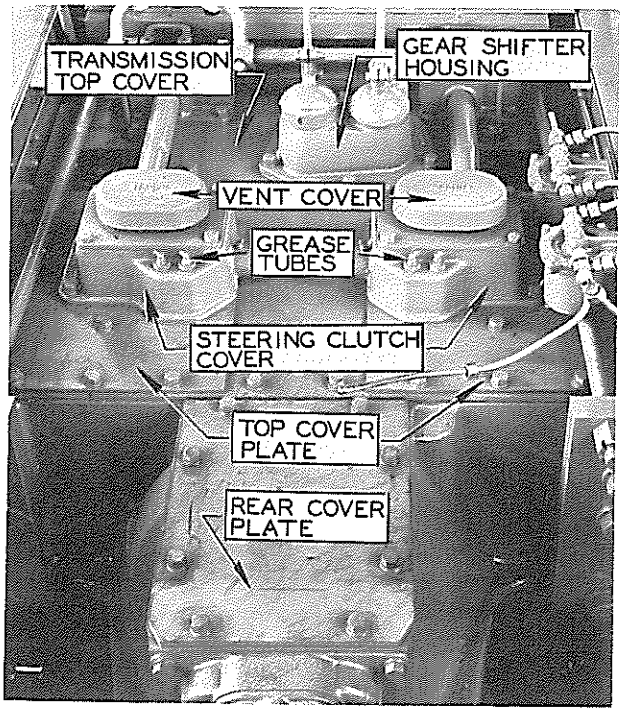

FIG. 3

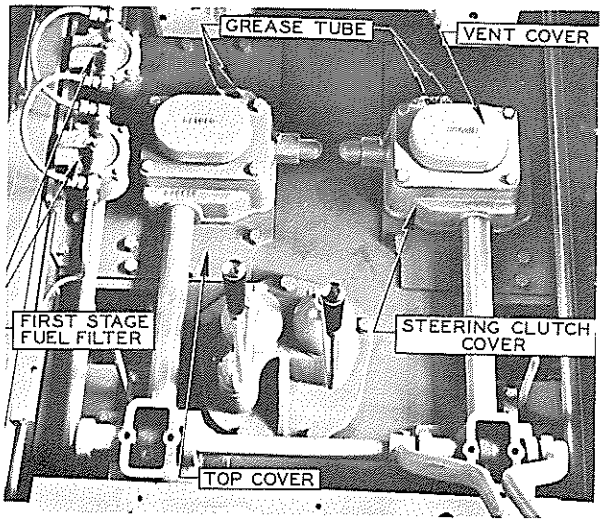

FIG. 4

be sure of getting shifter brackets back in the proper position as shown in Fig. 5. NOTE: Also mark location of stop collars, and shifter hubs on shifter shaft before removal.

18. Straighten locks on clamp screws and loosen screws.
19. Loosen clamp screws in shifter shaft collars.
20. Loosen clamp screws in shifter fork hub and remove shifter shafts from rear.
21. When removing shifter shaft, place all parts back on shaft in their respective places.
22. Straighten locks and remove 2 nuts on top shaft away from center bearing. Fig. 2.
23. Remove 4 capscrews and bearing retainer from rear end of sliding gear shaft.
24. Pull sliding gear shaft back and remove ball bearing at the front end of shaft.
25. Shaft can now be pulled out and all gears, spacers and nuts can be removed from case.
26. Remove center bearing from case.
27. Screw capscrews in each side of bearing retainer cup, pulling it out of case. When pulling assembly, screw in capscrews evenly to avoid breakage cage.

NOTE: Keep all shims in proper place for reassembling.

B. INSPECTION OF PARTS

Inspect all parts. Install new parts as required.

C. INSTALLATION OF SLIDING GEAR SHAFT AND SHIFTER SHAFTS

To install, reverse dismantling procedure. After the sliding gear shaft has been installed, place a pinch bar between the case and the clutch gear and test master clutch shaft for end play. Master clutch shaft should have .050″ to .060″ end clearance.

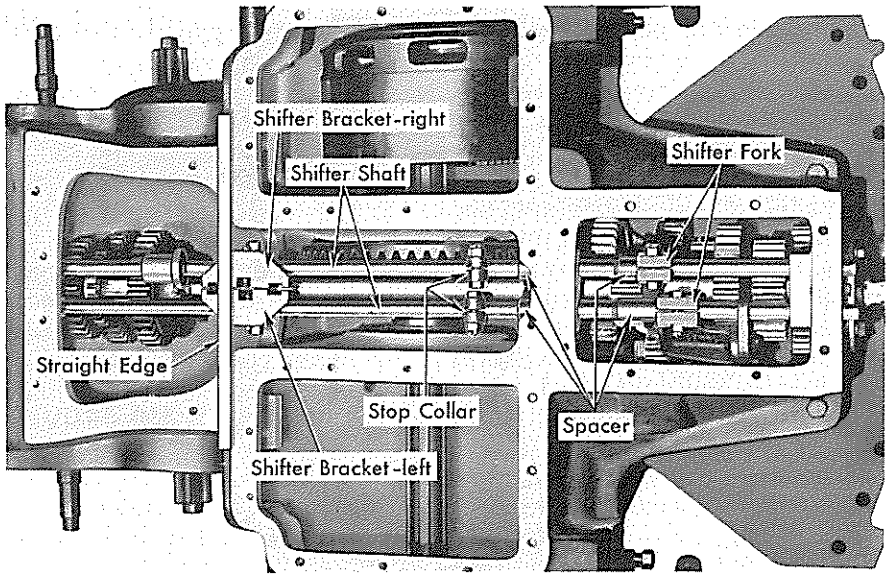

FIG. 5

In order to obtain this end clearance, add or remove shims from rear bearing cup.

D. REMOVAL OF MASTER CLUTCH SHAFT AND GEAR

1. Remove sliding gear shaft steps 1 to 27 inclusive, in Topic 104-A.
2. Remove 2 capscrews and inspection plate from one rear fender.
3. Remove inspection plate from motor spacer assembly.
4. Loosen clamp bolts so master clutch brake will slide on shaft freely.
5. Clutch shaft and gear can now be pulled back and out from top of case. Inspect all parts.

E. INSTALLATION OF MASTER CLUTCH SHAFT AND GEAR

Reverse dismantling procedure. Engage the clutch and set the clutch brake face $1\frac{1}{16}''$ to $1\frac{1}{8}''$ from the rear of the release bearing carrier.

F. REMOVAL OF REVERSE GEAR SET

1. Remove 6 bolts and rear enclosure cover from back of tank.
   NOTE: Shift tractor to high gear.
2. Remove 8 capscrews and rear top cover plate from transmission.
3. Remove 6 capscrews and rear cover cap.
4. Remove 7 capscrews and rear case cover.
5. Remove capscrews from left rear side of transmission case holding shaft in position.
6. Pull shaft out; hold spacer to keep it from falling into case.
7. Gear and spacer can now be removed.
8. Inspect all parts; install new parts where necessary.

G. INSTALLATION OF REVERSE GEAR SET

Reverse removal procedure, see Topic 104-F.

H. REMOVAL OF AUXILIARY GEAR AND SHAFT

1. Remove sliding gear shaft, steps 1 to 27, inclusive in Topic 104-A.
2. Straighten lock and remove nut from rear end of auxiliary gear shaft.
3. Remove 7 capscrews and remove clutch hole cover.
4. Remove 4 capscrews and bearing cover over front end of auxiliary gear shaft.
5. Place bar against rear end of shaft and drive it forward out of case.
6. Spacers and gears can now be taken from case.
7. Shaft can now be taken from spacer compartment.
8. Inspect all parts; install new parts where necessary.

I. INSTALLATION OF AUXILIARY GEAR AND SHAFT

Reverse removal procedure.

NOTE: Be sure rear bearing is placed in case before placing shaft in position.

J. REMOVAL OF BEVEL GEAR, BEVEL PINION AND SHAFT

1. Remove brakes and steering clutches. Refer to Topic 107.
2. Remove sliding gear shaft, steps 1 to 27, inclusive in Topic 104-A.
3. Straighten locks and remove nuts from bolts holding bevel gear to hub.
4. Remove bearing retainers by taking out 6 capscrews in each.
5. Place blocks between case and bevel gear teeth.
6. Place hardwood block over end of bevel gear hub; place bar against hardwood block through final drive pinion hole from outside and drive hub assembly out through left side of case.
   NOTE: In some cases the bevel gear hubs do not drive out very easy. When

this occurs the final drive pinion puller can be used. This can be accomplished by disassembling the pinion puller, and making a heavy washer which will fit next to the welded nut on puller shaft, then pushing the threaded end through the hub and out through the sprocket. Install the pedestal and spacer and use the nut to pull the hub. Before pulling is started, two blocks of hardwood must be placed between the bevel gear teeth and transmission case to hold the bevel gear solid and away from the bevel pinion, so that it will not bind when pulling the hub out of case and bevel gear off the hub, which is all one operation. This same method can be used for reassembling, by reversing the removal procedure.

NOTE: Take care to keep bearing shims on their proper sides for reassembling.

7. Bevel gear, bearings, bearing cups and bevel hub can now be taken from case.
8. Remove 4 capscrews holding bearing retainer on rear end of pinion shaft.
9. Straighten lockwasher and remove nut from rear end of pinion shaft.
10. Now shaft may be driven out toward front.

    NOTE: There are two sets of shims on rear end of shaft, so special care should be taken to keep them in their respective places for reassembling.
11. Gears, spacers and shaft can now be removed from case.
12. Remove back bearing cage by driving out towards rear.

K. INSPECTION OF BEVEL GEAR, BEVEL PINION AND SHAFT

Inspect all parts; install new parts where necessary.

L. INSTALLATION OF BEVEL GEAR, BEVEL PINION AND SHAFT

1. Reverse removal procedure; however, after bevel gear and hub has been installed it will be necessary to adjust bearings.
2. To adjust the bearings remove the bearing retainers, remove or add necessary thickness of adjusting shims from each side to adjust the bearings to a free running fit.
3. The adjusting shims also adjust the bevel gear to the bevel pinion. Removing shims from the right side and putting them on the opposite side moves the bevel gear nearer the bevel pinion.
4. Caution should be exercised when adjusting bearings so the bevel gear adjustment is not changed.

   NOTE: While adjusting the bevel gear bearing, the hub should be bumped from end to end. This places the bearing cups in the correct position when adjustments are being made.
5. It will also be necessary to adjust pinion to bevel gear. Align heels of pinion gear and bevel gear as near flush as possible by adding or removing shims under bearing retainer on rear of pinion shafts.

NOTE: It will be necessary to add or remove shims between second gear and spacer approximately .004" to .006" so spacer between second and high gear can be turned by hand.

M. CHANGE SPEED GROUP (SEE FIG. 6.)

1. Effective in regular production on HD 14 No. 759, a change has been made in the transmission of the HD 14 tractor to further increase its life. Two bearings were changed from ball to roller bearings, and four gears were changed from 20 degrees pressure angle teeth to 25 degrees pressure angle. The splines and size of the pinion shaft were changed also, which necessitated changes in all the gears on the pinion shaft. In cases where difficulty has been experienced with bearings or gears in this transmission, it is recommended that the new parts be installed.

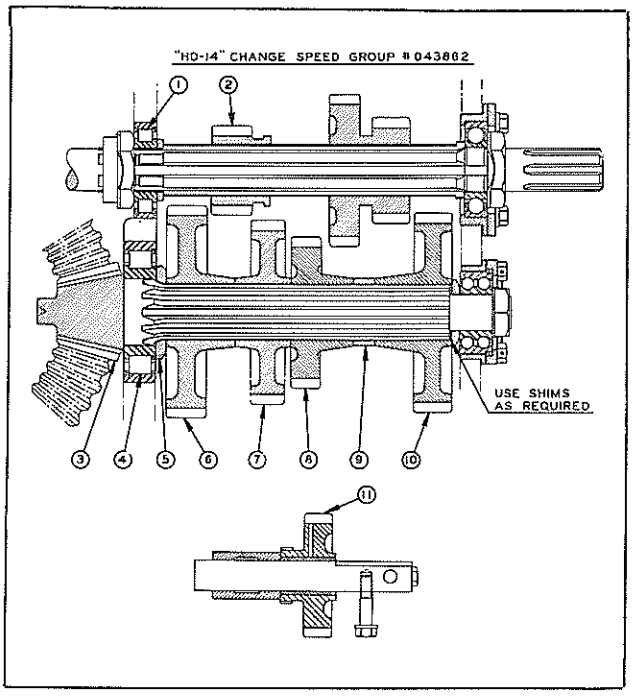

FIG. 6

2. One new Shifter Shaft Bracket — Left No. 044251 will have to be used in place of the old bracket No. 71280, which was used in all HD 14 tractors prior to HD 14-759.
3. Before the 25° pressure angle teeth were used the gears were narrower and

two No. 71280 shifter shaft brackets were used, but in order to make the new gears mesh fully the old left hand bracket will have to be removed and the new No. 044251 Shifter Shaft Bracket installed. Be sure to order this bracket when ordering the rest of the parts for this changeover.

4. The following parts will be required to make this changeover:

Item	Part No.	Name
1	043888	Roller Bearing
2	044002	Low Reverse Pinion
3	044109	Bevel Pinion
4	043889	Roller Bearing
5	043867	Spacer
6	043864	Low Gear
7	043866	Reverse Gear
8	043865	High Speed Gear
9	043861	Spacer
10	043863	Second Speed Gear
11	044034	Reverse Idler
12	044251	Shifter Shaft Bracket (Left)

CAUTION: The gears with 25 degree angle teeth can be identified by the part number stamped on them. UNDER NO CIRCUMSTANCES SHOULD A 25 DEGREE ANGLE TOOTH GEAR BE USED WITH A 20 DEGREE ANGLE TOOTH GEAR.

5. In order to install these new parts in the field, it will be necessary to remove the steering clutches. Then remove the bevel gear and hub. Remove the top shaft and replace bearing (1) and the gear (2) with the new parts. Remove the pinion shaft and pinion shaft gears and replace them with the new parts listed above. After installing new pinion and gears, be sure to install or remove shims where shown in drawing to obtain .004" or .005" clearance between the gears on the pinion shaft. Install reverse idler gear with new gear item (11).
6. It is recommended that a new bevel gear also be installed at the same time as the new pinion and gears.
7. Reinstall the bevel gear and adjust bevel gear and pinion. Install steering clutches and complete the assembly of the tractor.

105 -- "HD 7" Steering Clutches, Brakes and Final Drive Pinion

A. REMOVAL OF BRAKES:

1. Remove seat cushion, batteries, and rear enclosure plate.
2. Shut fuel off under tank by turning shut off cock handle to vertical position.
3. Disconnect fuel lines under tank and remove clamp bolts holding fuel line to fender.

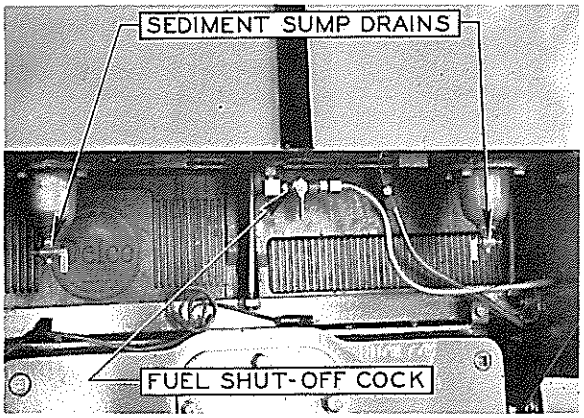

FIG. 1

4. Disconnect both inlet and outlet lines at filter under seat and remove filter by taking out two bolts that hold filter to fender.
5. Remove seat by taking out 3 capscrews on each side holding seat to fuel tank, the 3 bolts holding seat to top fenders, and the 4 bolts holding seat frame to fender plate.
6. Remove clamp bolt holding return fuel line to rear of seat frame.
7. Remove 3 capscrews and 3 bolts on each side that holds battery rack in place.
8. Remove yoke pins from rear end of steering clutch rods. Fig. 2.

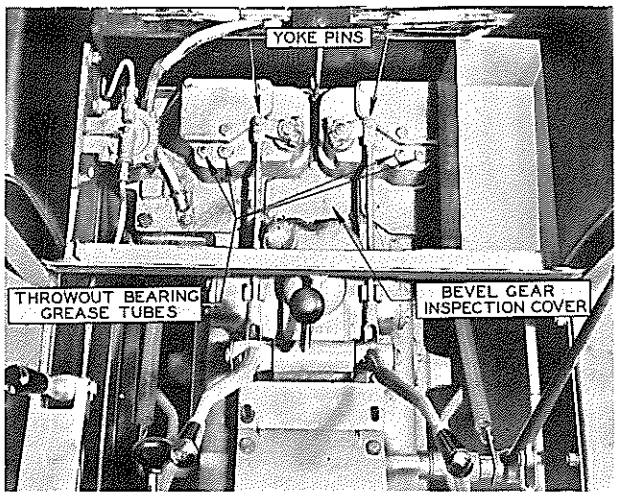

FIG. 2

9. Remove steering clutch inspection covers by removing 6 capscrews.
10. Remove jam nuts from grease tubes which come up through steering clutch

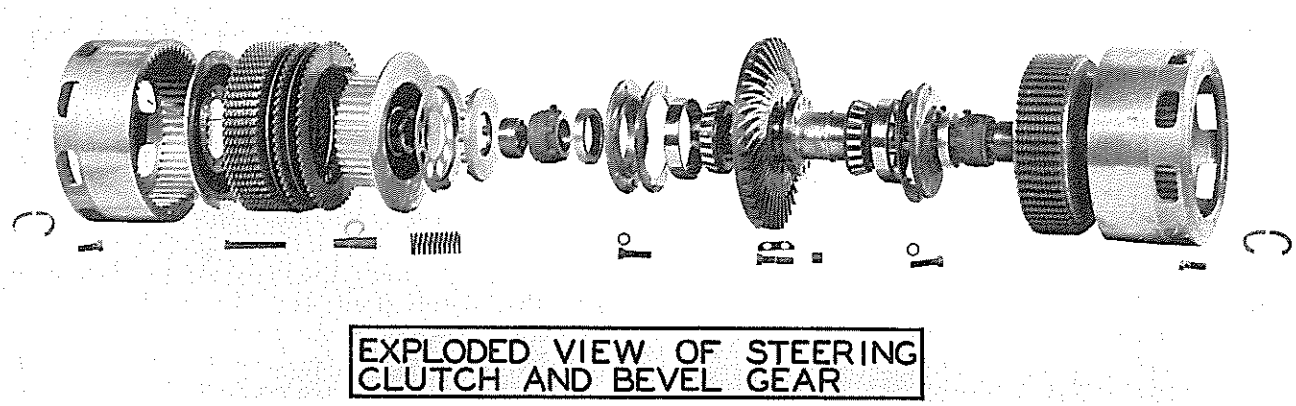

FIG. 3

cover assembly. Fig. 2.

11. Loosen steering clutch adjusting screw lock bolts at top of throwout fork and back adjusting screw out far enough to pass by thrust pin.
12. Remove remaining capscrew which holds steering clutch cover to transmission case and remove this cover.
13. Lift out steering clutch throwout forks.
14. Remove equalizers in bottom of each clutch compartment by removing bolt which comes up through bottom of transmission case.
15. Unhook springs from brake levers; remove pins from bottom brake rods.
16. Remove one top capscrew and loosen one bottom capscrew on each brake hole cover; then remove covers.

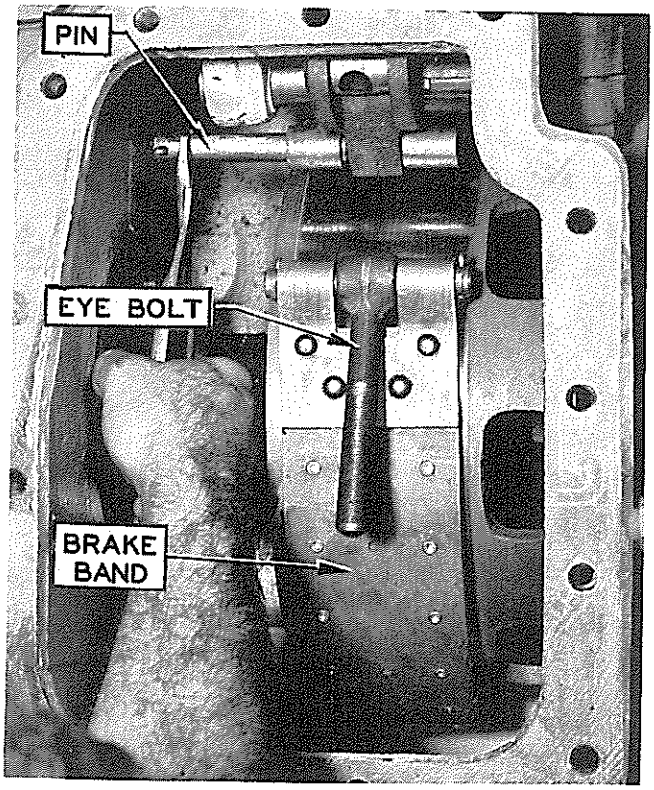

FIG. 4

17. Remove brake adjusting nut and pull adjusting bolt out of swivel pin. Then screw nut back on bolt to avoid any damage to threads.
18. Remove band pin from lower loop of band and pull band from around drum care to be taken not to bend the band.

B. REMOVAL OF FINAL DRIVE PINION:

1. Remove Brakes. Refer to Topic 105-A.
2. Remove 8 capscrews which hold the brake drum to the driven hub. Now the drum can be pushed away from the driven hub.

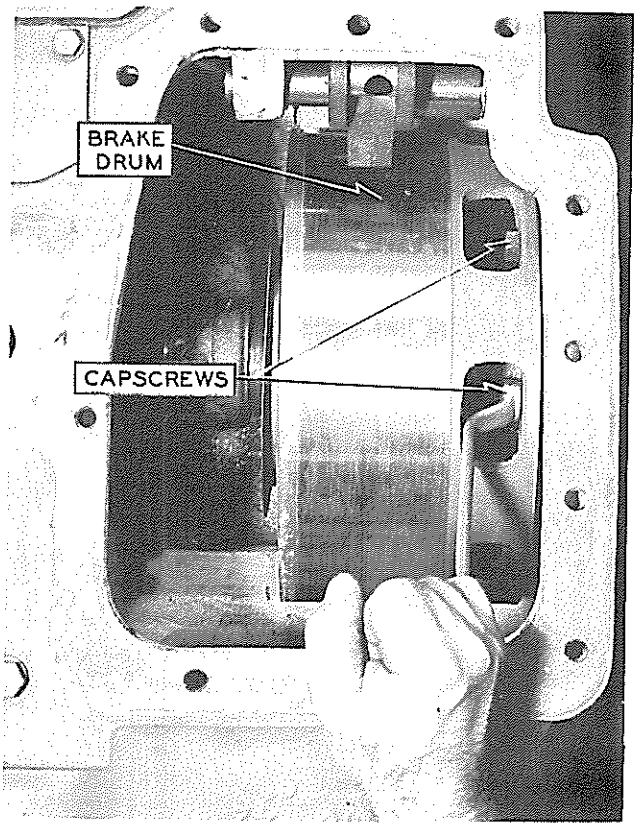

FIG. 5

3. Remove axle end covers and sprocket guards.

4. Remove covers from outer end of pinion shaft by taking out 4 capscrews in each.
   NOTE: PULL PINIONS ON EACH SIDE USING SPECIAL PINION PULLER (Prior to HD 7—1132)
5. Screw adapter into end of pinion shaft and tighten thoroughly.
6. Loosen pinion shaft nut and back it off 3 or 4 threads.
7. Set puller pedestal between the sprocket spokes and directly over the adapter; screw puller bolt in place.
8. Tighten up on puller nut using a 4 ft. pipe or wrench handle, then use ram and jar pinion loose from driven hub.
9. Remove nut from end of pinion shaft.
10. Finish pulling pinion shaft from case.
11. Lift driven hub from clutch compartment.

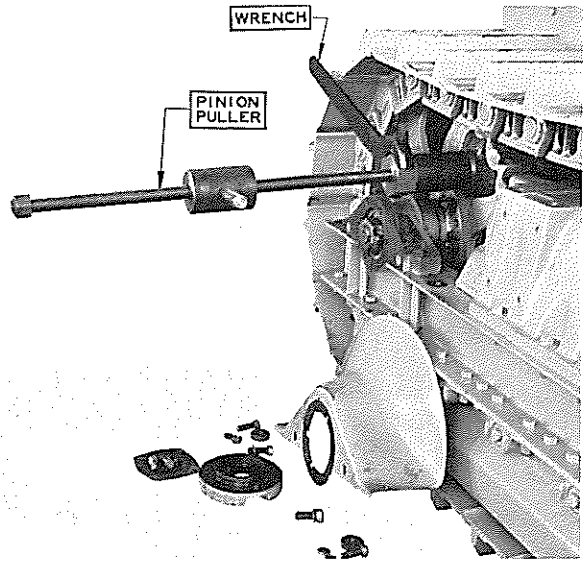

FIG. 6

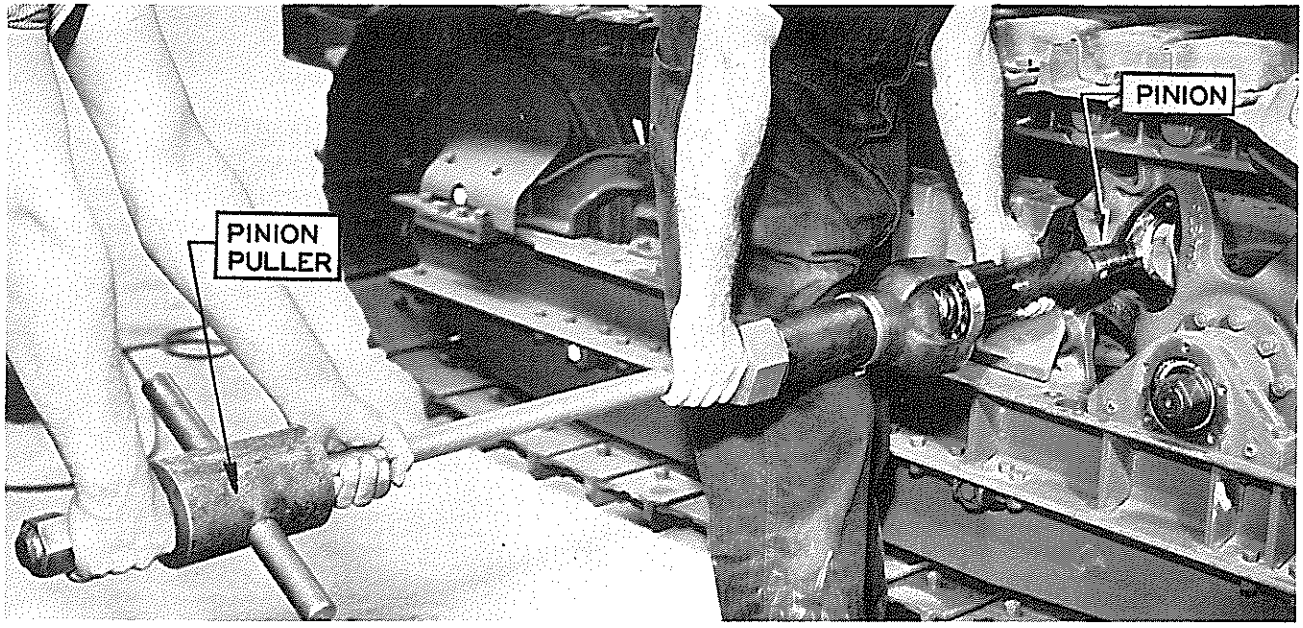

FIG. 7

C. REMOVAL OF STEERING CLUTCHES:

NOTE: REMOVAL OF STEERING CLUTCH SHAFT (Prior to HD-7-1132).

1. Remove brakes. Refer to Topic 105-A.
2. Remove final drive pinion. Refer to Topic 105-B.
3. Straighten lockwashers at each end of steering clutch shaft and remove nuts with special socket.
4. Push clutch shaft either way far enough to permit one clutch to be lifted out. Push shaft in opposite direction until the other clutch can be lifted out. The spacers between the clutch hub and bevel gear hub will drop into the case when the clutches are removed from the compartments. Be sure they are in place when reinstalling clutches.

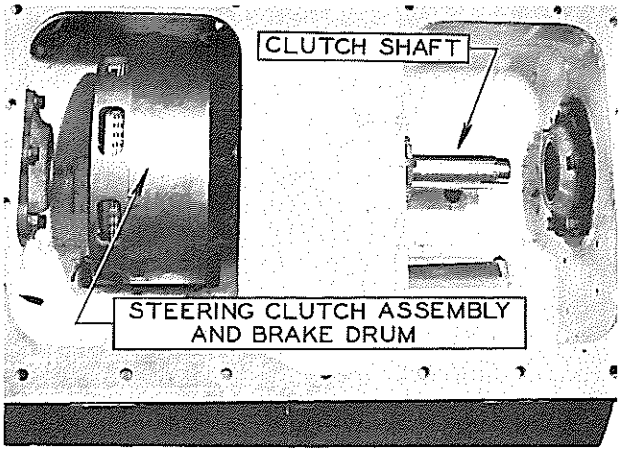

FIG. 8

NOTE: Removal of Steering Clutch Shaft above Serial No. HD 7 1132. On the second type steering clutch shaft, it is necessary to remove only one drive pinion to remove the steering clutches.

5. Pull the pinion opposite the clutch to be removed if only one clutch is to be taken out.
6. Cut lock wire on adjustable spacer nut lock screw and turn screw out far enough to clear spline in the clutch shaft.

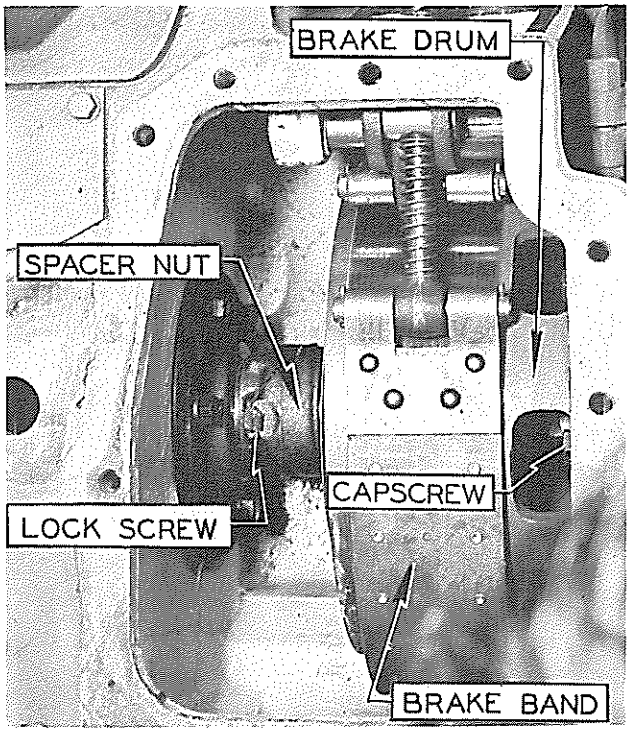

FIG. 9

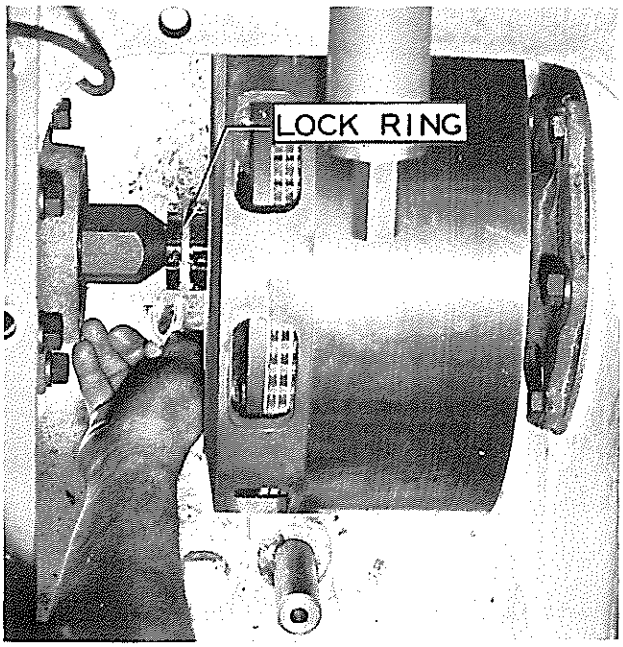

FIG. 10

7. Screw one spacer nut clockwise to loosen steering clutches on shaft and slide the clutch toward the center.
8. Remove split lock rings from ends of shaft.
9. Place pinion puller in end of clutch shaft and pull shaft from clutch assembly.
10. Clutches can now be lifted from compartment.

FIG. 11

D. DISMANTLE STEERING CLUTCH:

1. Remove drum from clutch assembly taking care not to bend clutch disc teeth.

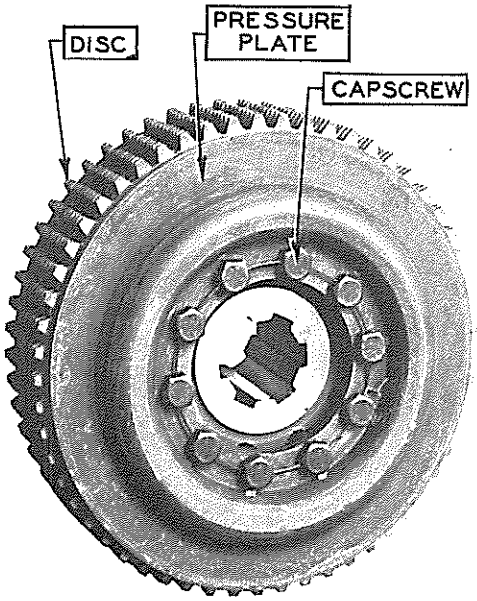

FIG. 12

2. Remove lockwire and unscrew 3 of the 10 capscrews. Fig. 13. Install in these holes 3 ½" x 6" studs which have 1" N.F. thread on one end and 2½" N.C. thread on the other end. Install the end with 1" thread in the shifter plate.
3. Install nuts on studs and tighten down against pressure plate.
4. Remove remaining capscrews; loosen the stud nuts evenly until all tension is taken off the clutch springs.

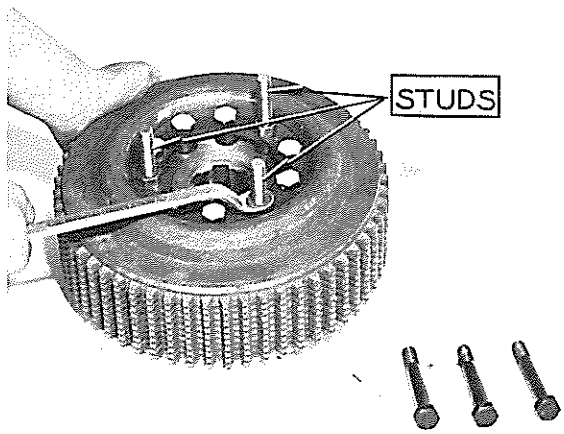

FIG. 13

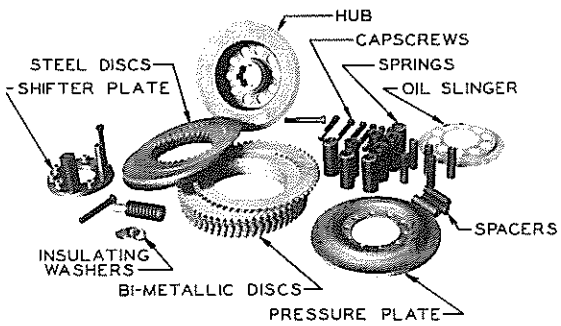

FIG. 14

5. The pressure plate, discs, springs, etc., can now be removed.

E. INSPECTION OF STEERING CLUTCH AND BEVELED GEAR HUB PARTS:

When the clutches have been removed and dismantled inspect the following items:

1. BI-METALLIC FRICTION DISCS: These discs are made of steel centers with bi-metallic material bonded to the steel. Tickness when new is approx $\frac{5}{32}$". Inspect discs for wear and metal flaking. If overall thickness of disc is less than $\frac{1}{8}$", or if the metal has flaked at any point a new disc should be installed.
2. HYCO FRICTION DISCS: These discs are made of steel centers with wire mesh woven lining, bonded to the steel. Thickness when new is approx. $\frac{3}{16}$". Inspect discs for wear and material coming loose. If overall thickness of the disc is less than $\frac{5}{32}$" or if the material has come loose at any point a new disc must be installed.
3. RAYBESTOS FRICTION DISCS: These discs are made of a solid piece, wire mesh and molded material. The overall thickness when new is approx. $\frac{3}{16}$". Inspect discs for wear, condition of teeth and oil saturation. If overall thickness of disc is less than $\frac{5}{32}$", or if they have been run any length of time being oil soaked, new discs must be installed.
4. BRAKE DRUMS: Clean thoroughly and inspect. If drums are scored or grooved on the outer surface they can be chucked in a lathe and turned down. In doing this do not take off more than $\frac{1}{16}$" of material, and extend the cut only to the ventilating holes. To remove any material from between the ventilating holes will materially weaken the drum.
5. BEVEL GEAR HUB SEALS (First Type). Inspect for proper adjustment and serviceable condition. If packing leaks, tighten adjusting nuts only enough to stop leak. If packing is worn out, adjusting nuts will screw in all the way without stopping leaks; new packing must be installed.
6. BEVEL GEAR HUB SEALS: (Second Type). The second type is a raw hide spring loaded seal. This seal cannot be adjusted, and if it leaks, new seals must be installed. Before new seals are installed, the bevel gear bearing adjustment must be inspected, if the adjustment is incorrect see Topic 102-H for bevel gear bearing adjustments.
7. BEVEL GEAR BEARINGS: Inspect for loose bearings by observing play in clutch shaft. When doing this be sure the hub packing is loosened or removed so that it does not prevent the detection of any play that may be present in the bearings.
8. CLUTCH SPRINGS: Inspect tension of spring by measuring its "free height" that is, its height when standing upright without anything compressing it. If this length is $3\frac{1}{4}$" or greater the spring can be re-used. If it is less than $3\frac{1}{4}$" it is an indication that the spring has lost its tension and new springs should be installed.

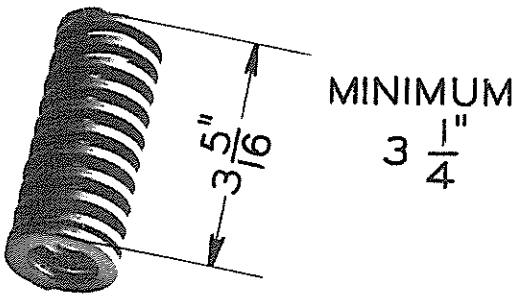

FIG. 15

9. CLUTCH THROWOUT BEARINGS: Inspect for wear or lack of lubrication.

Install new bearings if necessary.

10. CLUTCH SHAFT: Inspect splines for burrs. Be sure nuts will start on threads freely.

F. ASSEMBLY OF STEERING CLUTCH:

1. Place steering clutch hub on bench or some flat surface with spring holes up. Figure 16.

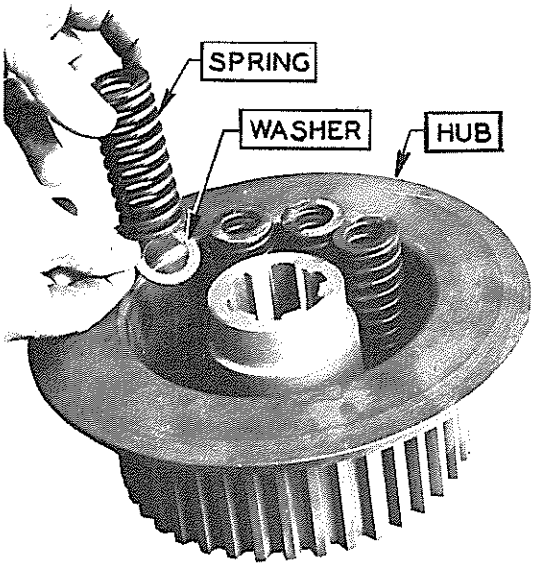

FIG. 16

2. Place an insulating washer in each hole. Make sure the washers lie flat in the bottom of the hole.
3. Place a spring in each hole. Figure 16.
4. Install oil slinger on shifter plate and set shifter plate down on springs with flat surface up. Figure 17.

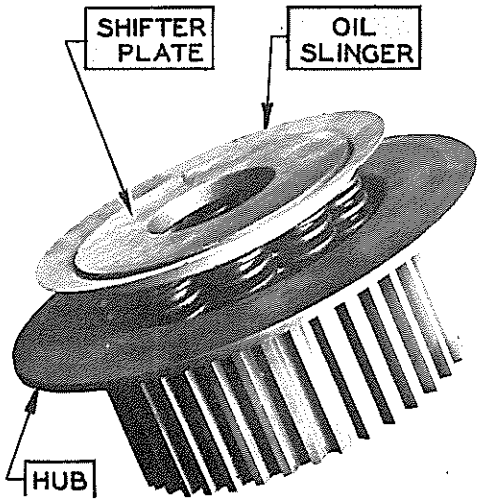

FIG. 17

5. Hold shifter plate firmly in place and turn hub assembly so that shifter plate is now on bench. Figure 18.
6. Place a spacer in each hole in hub through center of springs. Figure 18.

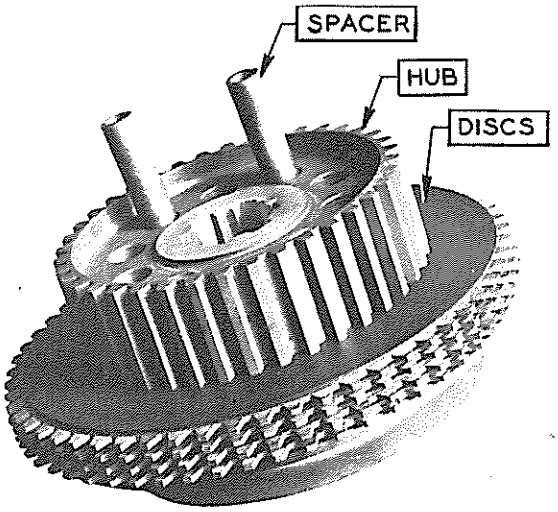

FIG. 18

7. Stack discs alternately on hub beginning with a friction disc. Figure 18.
   NOTE: Any friction disc that can be used again should be stacked on the hub first and the new discs toward the top. (See inspection of steering clutches. Stack discs on hub until stack height is approximately 3⅛".)
8. Place pressure plate in place and screw 3 studs into the shifter plate as shown.
9. Line up teeth on clutch discs so brake drum will slide up and down on discs freely.

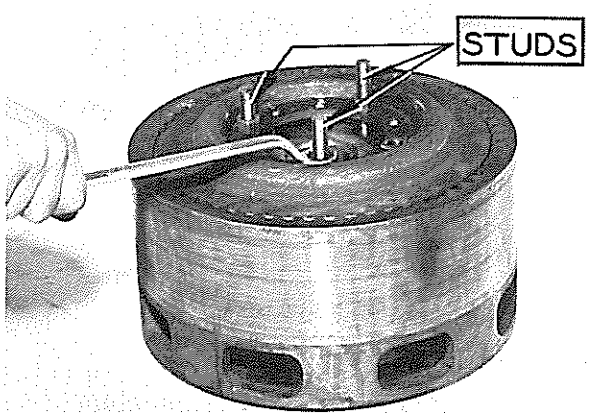

FIG. 19

10. Run nuts down on studs forcing pressure plate up as far as it will go. Now it is completely compressed. Before the bolts are installed, turn the clutch assembly up on edge and check the distance at hub and shifter plate as shown. If the measurements are within the limits, lay the clutch back, with shifter plate down.
    If the measurements is not within the limits and the shifter plate extends out too far, extra steel disc should be added.

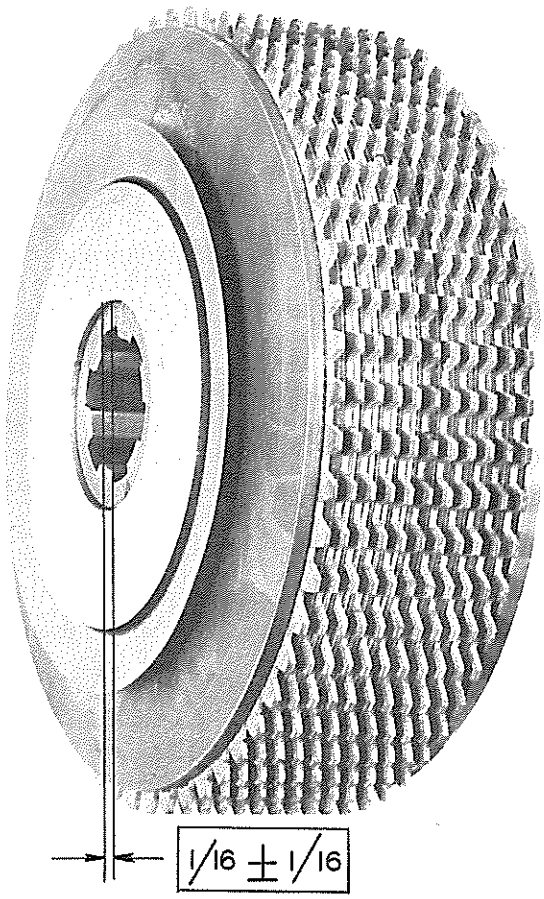

FIG. 20

If the shifter plate is in too far, remove a steel disc. In this case, all discs should be removed from hub, and reassemble with two friction discs together on the bottom of the stack. Complete stack height by alternating discs so there will be a steel disc on top when assembled.

11. Install 8 of the capscrews and tighten. Remove the 3 assembling studs and replace the remaining 3 capscrews and tighten securely, lining up the holes in bolt heads and place wire as shown.
12. Repeat the above operations for the other clutch.

G. INSTALLATION OF STEERING CLUTCHES (First type Clutch Shaft prior to "HD 7" #1132)

1. Place steering clutch assembly in brake drum and lower into clutch compartment.
2. Install clutch shaft in bevel gear hub from opposite side, and push through far enough to place spacer on end of shaft.
3. Lift clutch assembly up to align the hole in the clutch hub and the hole in the bevel gear hub. Push shaft through clutch hub, taking care not to damage the threads on the end of the clutch shaft. The clutch may have to be rotated slightly to get the splines on the shaft to line up with the splined steering clutch hub.
4. Push shaft through until the other clutch can be lowered into the opposite compartment. Place spacer and clutch on shaft.
5. Install thick washer, lockwasher, (with cup part out) and nut on one end of shaft. Run nut on tight.
6. Install washer, lockwasher, and nut on the other end. Draw the latter nut up tight with the special wrench and bend the lockwashers over nut.

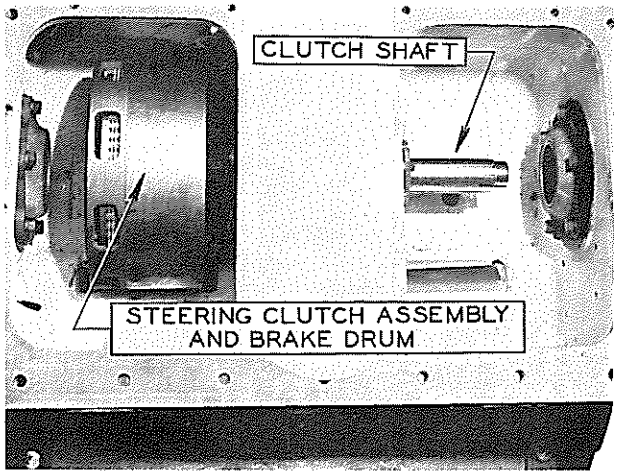

FIG. 21

H. INSTALLATION OF STEERING CLUTCHES (Second Type Clutch Shaft, Effective "HD 7" #1132)

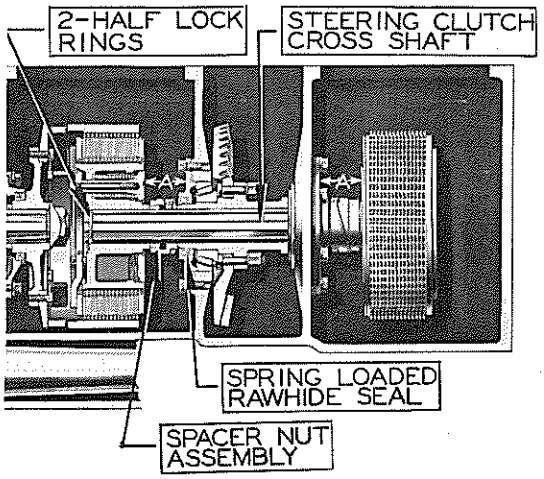

FIG. 22

1. Install clutch shaft through final drive housing and on through bevel gear hub far enough to slide adjustable spacer on spline.
2. Place steering clutch assembly in compartment and align splines of shaft with those in the clutch hub.

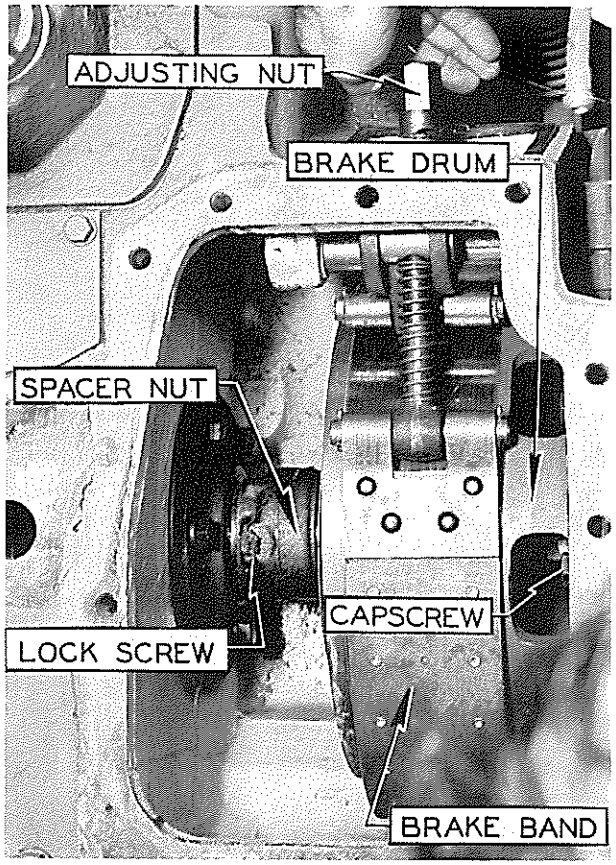

FIG. 23

3. Push shaft through clutch hub far enough to place spacer nut on other end of the shaft.
4. Place second clutch in compartment and push shaft through the clutch hub.
5. Install split lock rings on outer ends of clutch shaft and slide the clutch assembly against the lock rings making certain that the lock rings are in the counterbore of the clutch hub.
6. Tighten the adjustable spacer nut on each side equally and securely. Tighten the lock capscrew in the spacer nut, making certain that the capscrew seats between the splines in the clutch shaft, and lock with a wire.

I. INSTALLATION OF FINAL DRIVE PINIONS:

1. Install keys in driven hub; peen over edges of slots in the hub so the keys will not fall out; place hub in clutch compartment.
2. Remove bearing from outer end of pinion; shove pinion through inner bearing with key way on both top and bottom far enough to place Duprene seal over end of shaft.
3. Lift hub and align keys with keyways in the pinion shaft, push driven hub into rawhide seal and hold firmly by placing a bar on each side of the hub and prying it toward the pinion.
4. With the aid of the pinion puller adaptor, screw puller and ram assembled to pinion, drive the pinion in until the lockwasher and nut can be started on the shaft.
5. Drive pinion shaft through hub, holding against driven hub with bars. Place lock washer and nut on shaft and tighten with the aid of the ram, drive in on pinion. Give the nut a final pull, bend the lockwashers over in two places on hub and two on nut, and remove pinion puller parts.
6. Install bearing on outer end of pinion with shielded side toward gear. Install cover and gasket over end of pinion shaft.
7. Replace sprocket shield and axle end cap.

J. INSTALLATION OF BRAKES:

1. Install brake band taking care that the bands fit drum properly.
2. Install pin and cotter keys in lower part of band.
3. Install spring on adjusting bolt, adjusting bolt in swivel pin and install adjusting nut.
4. Install adjusting screw and jam nut in the bottom of transmission case to hold the brake band in its proper place. Run the screw up against the band, forcing the band against the drum just snug with fingers, then back off ½ turn and

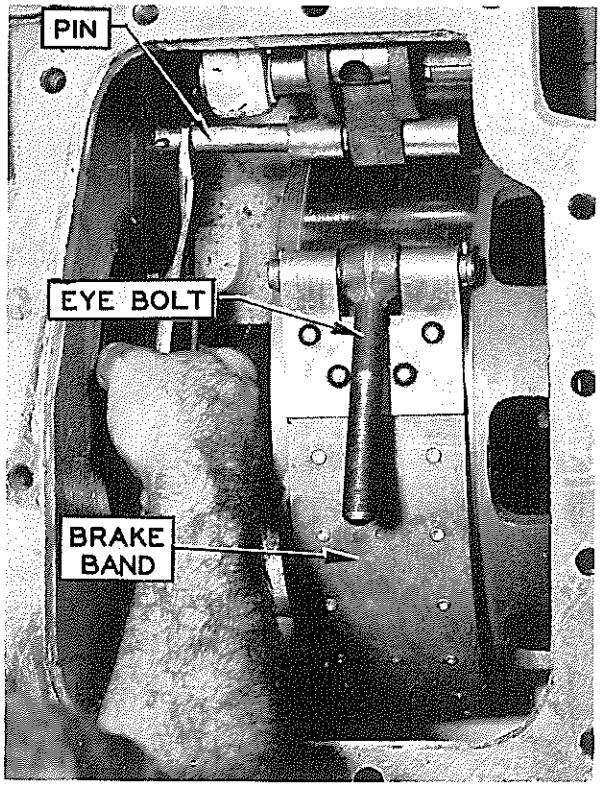

FIG. 24

lock jam nut. This adjustment screw holds the brake band up in its proper location.

5. Install brake spring in brake lever.
6. Install equalizer bar in bottom of transmission case.
7. Install throwout fork assembly, making sure it seats in the equalizer.
8. Install steering clutch cover and grease tubes.
9. Adjust brakes. Refer to brake adjustment, Topic 57-A, and install brake adjustment cover.
10. Adjust steering clutches; refer to steering clutch adjustment, Topic 55-A, and install top cover.
11. Install remaining parts that were removed.

106 -- "HD 10" Steering Clutches and Brakes

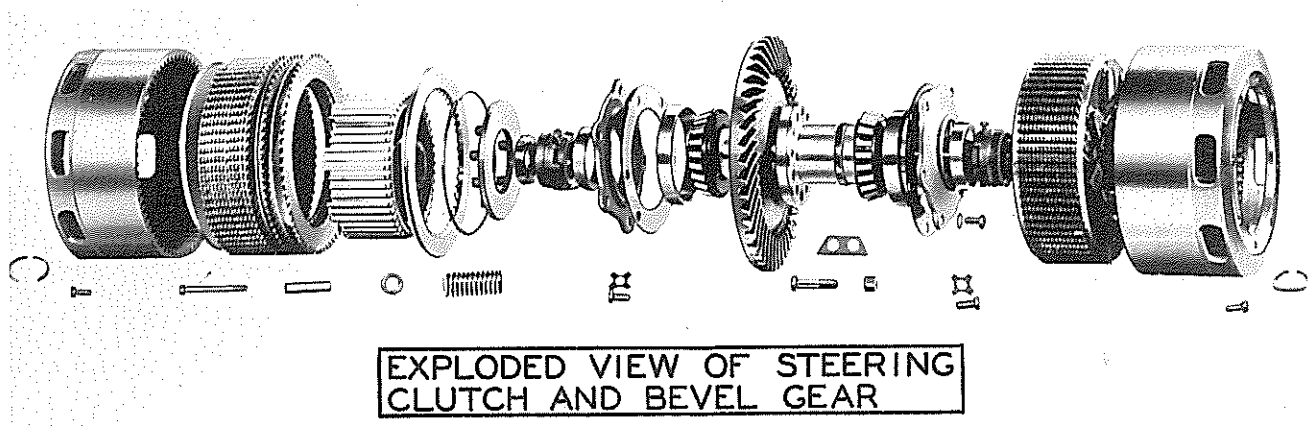

FIG. 1

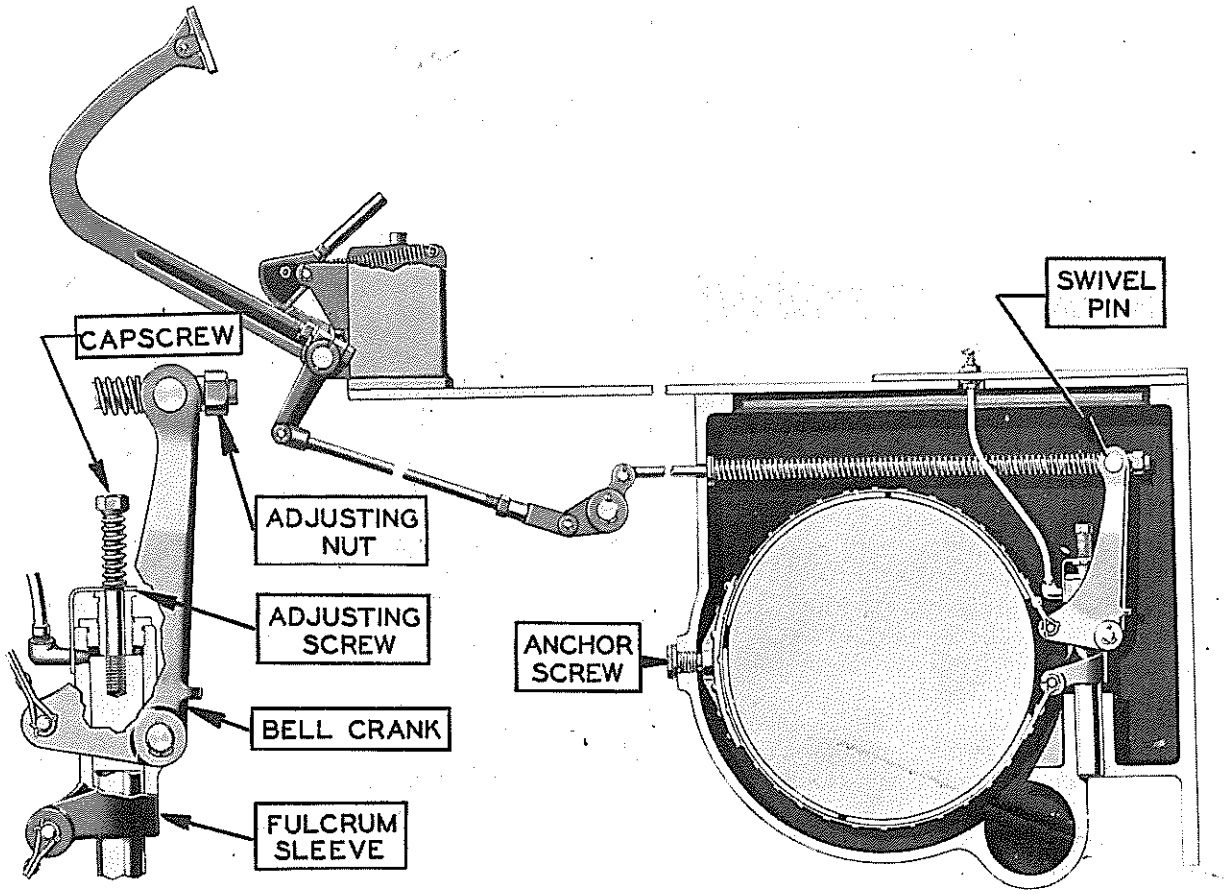

FIG. 2

A. REMOVAL OF BRAKES:

1. Remove seat cushion and batteries. Remove rear enclosure plate.
2. Shut fuel off under tank by turning shut-off cock handle to vertical. Fig. 3.

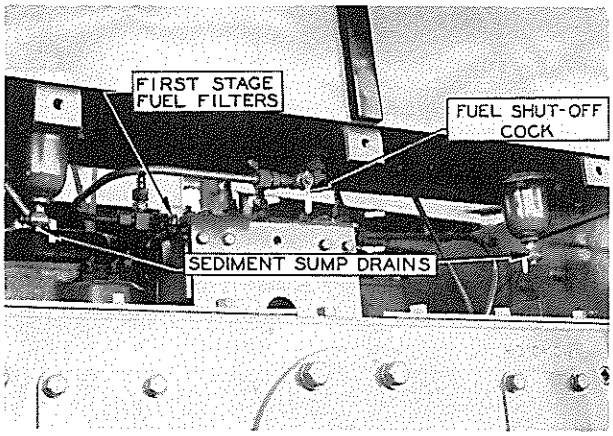

FIG. 3

3. Disconnect fuel lines under tank and remove clamp bolts holding fuel line to fender. Fig. 3.
4. Disconnect both inlet and outlet lines at filters under tank and remove filters by taking out 2 capscrews holding them to top of transmission case.
5. Remove seat by taking out 3 capscrews on each side holding seat to fuel tank, the 3 capscrews holding seat to top fenders, and the 2 bolts holding floor plate to front of seat frame.
6. Remove clamp bolt holding return fuel line to rear of seat frame.
7. Remove battery rack by removing 2 bolts on each side holding it to the rear fenders.
8. Remove rear fender support angle by taking out 3 capscrews and 4 bolts in each side.
9. Remove ventilating covers from top of steering clutch cover by taking out 4 capscrews in each. Fig. 4.
10. Remove jam nuts from grease tubes which come up through steering clutch cover assembly. Fig. 4.
11. Loosen steering clutch adjusting screw lock bolts at top of throwout fork and back adjusting screw out far enough to pass by thrust pin; unhook throwout fork spring from dowel in top of case. Fig. 4.
12. Hold rod connector and loosen jam nut. Back screw out of connector.
13. Remove 2 capscrews holding steering clutch covers on each side and remove covers from case. Remove jam nut on grease fitting to brake fulcrum pin.
14. Remove 10 remaining capscrews in top cover. Repeat operation on opposite side.

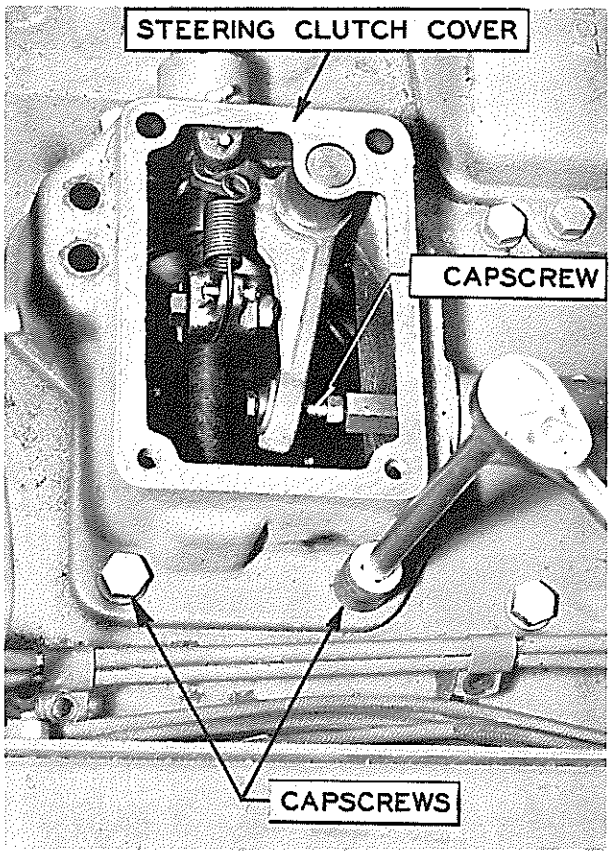

FIG. 4

15. Remove steering clutch throwout forks.
16. Remove equalizers in bottom of each clutch compartment by removing bolt which comes up through bottom of transmission case.
17. Remove 4 capscrews on brake adjusting cover on each side.

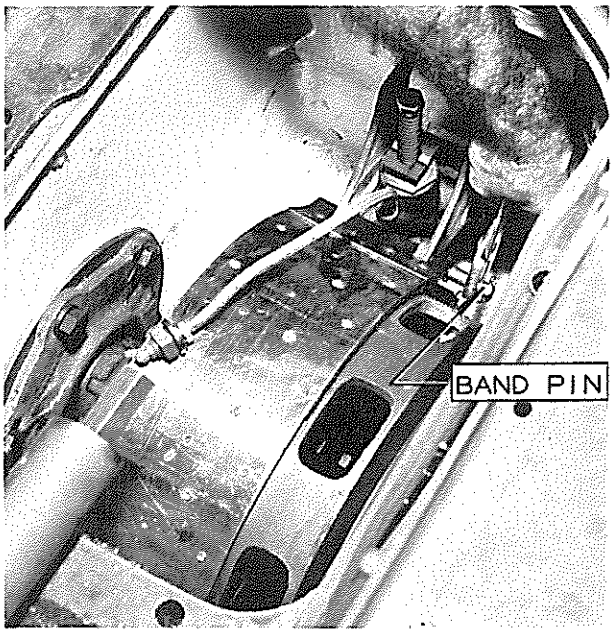

FIG. 5

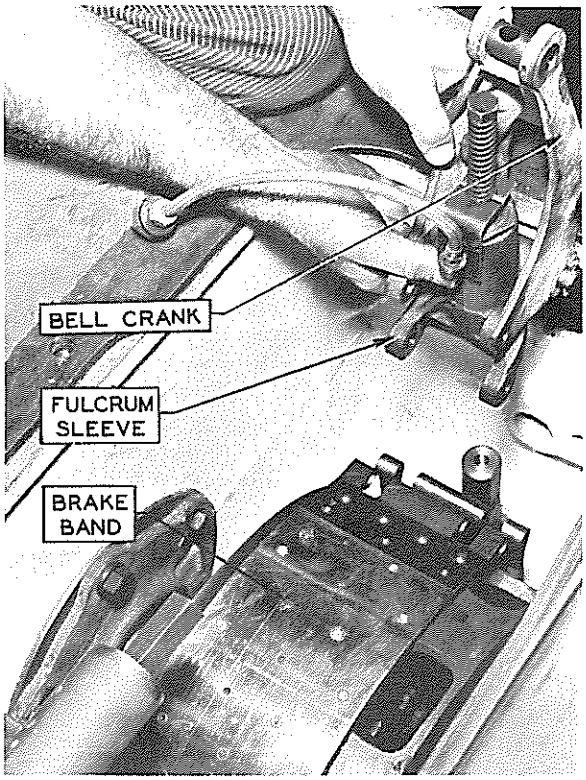

FIG. 6

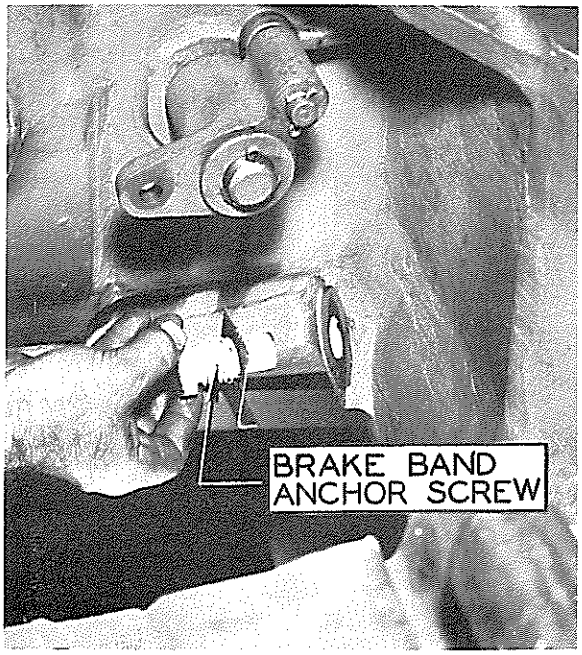

FIG. 7

18. Remove adjusting nut, swivel pin, brake rod pin, cotter pin and washer holding bell crank on shaft; pull bell crank off shaft.
19. Pull brake rod out of case holding spring, flat washer and felt washer so that they will not fall into case.
20. Straighten lock and remove anchor screws from front of case. Take capscrews out of top of fulcrum pin and remove band pins; bands can now be removed from case.

B. REMOVAL OF FINAL DRIVE PINION: Standard Tread, "HD 10" Tractor.

1. Remove brakes, see Topic 106-A.
2. Remove lockwire and 8 capscrews which hold the brake drum to the driven hub. Now the drum can be pushed away from the driven hub.
3. Remove axle end covers and sprocket guards.
4. Remove covers from outer end of pinion shaft by taking out 4 capscrews in each.
   NOTE: Remove pinion from each side as follows using special pinion puller. On second type HD 10 and HD 10-W. Serial No. 1516 and above, only one pinion needs to be pulled. See paragraph "D." For instructions on pulling HD 10-W (Wide Gauge) see paragraph "C."

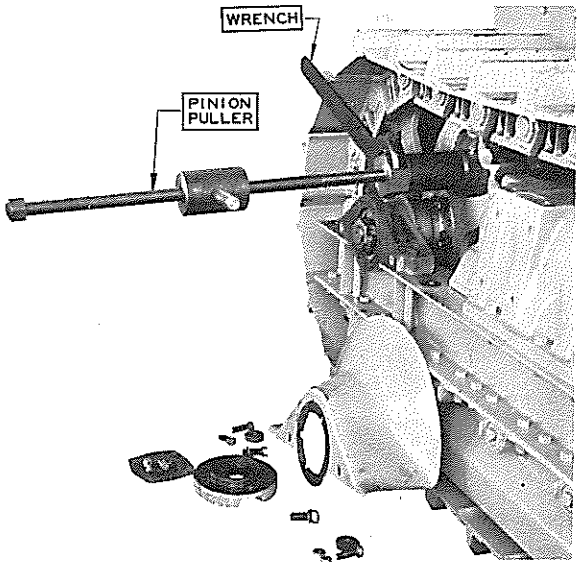

FIG. 8

5. Screw adapter into end of pinion shaft and tighten securely.
6. Set puller pedestal in place between the sprocket spokes and directly over adapter. Screw puller bolts in place.
7. Straighten lockwashers and back pinion nut off pinion shaft.
8. Tighten up on puller nut using a 4 foot pipe or wrench handle, then use ram and jar pinion loose from driven hub.
9. Finish removing nut end of pinion shaft.
10. Finish pulling pinion from clutch compartment.

C. REMOVAL OF FINAL DRIVE PINION: (Wide Gauge HD 10-W)

1. Follow instructions under Topic 106-B,

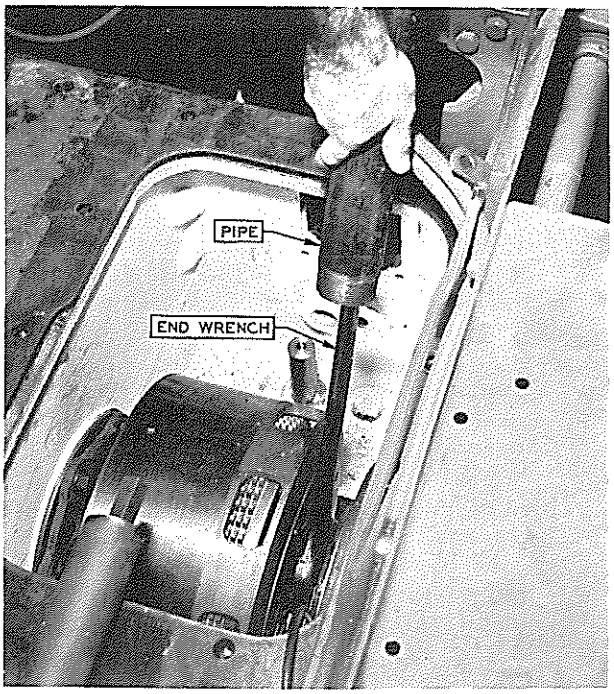

FIG. 9

1 to 5 inclusive.

CAUTION: Do not attempt to pull the pinion more than ¾" as bearing will be damaged if it is pulled any farther. The inner race of the center bearing will strike the teeth of the gear assembly before the outer bearing comes out of gear case bore.

2. Remove outer bearing race and roller assembly.

   NOTE: There are three slots in gear case bore. Use screw driver in these, to remove bearing. Fig. 11-B.

3. Remove capscrews from inside bearing retainer. Fig. 11-C.
4. Slide driven hub toward steering clutch as far as possible.
5. Remove inner bearing from case.

   NOTE: To remove inner bearing, place a small punch inside the final gear case bore parallel to the teeth of the pinion. Drive against the outer race of the center bearing until outer case of inner bearing is out of bore case. Fig. 11-C.

6. Remove pinion from case.

NOTE: The pinion can now be lifted away from teeth of gear assembly as the center bearing rollers are clear of the race, thus allowing the pinion to be lifted above its normal position. It will be necessary to turn pinion until flat space on spacer is away from gear assembly to provide clearance and allow the pinion to lift away far enough for the inner race lip on center bearing to clear teeth on gear assembly. Fig. 11-D.

CAUTION: If pinion pulls to a stop it must be turned until it will pull easily.

D. BALL BEARING NO. 042890 USED ON "HD 10" FINAL DRIVE PINION:

NOTICE: On account of a material shortage, effective in production with HD 10-1756, ball bearing No. 042890 was used in place of the No. 042952 roller bearing on the outer end of the final drive pinion.

1. Pinions having the No. 042890 ball bearing on the outer end are removed in a slightly different manner from those having the roller bearing.
2. The following gives details of the method of removal and installation:
3. Proceed in the usual manner in preparation for actually pulling the pinion.

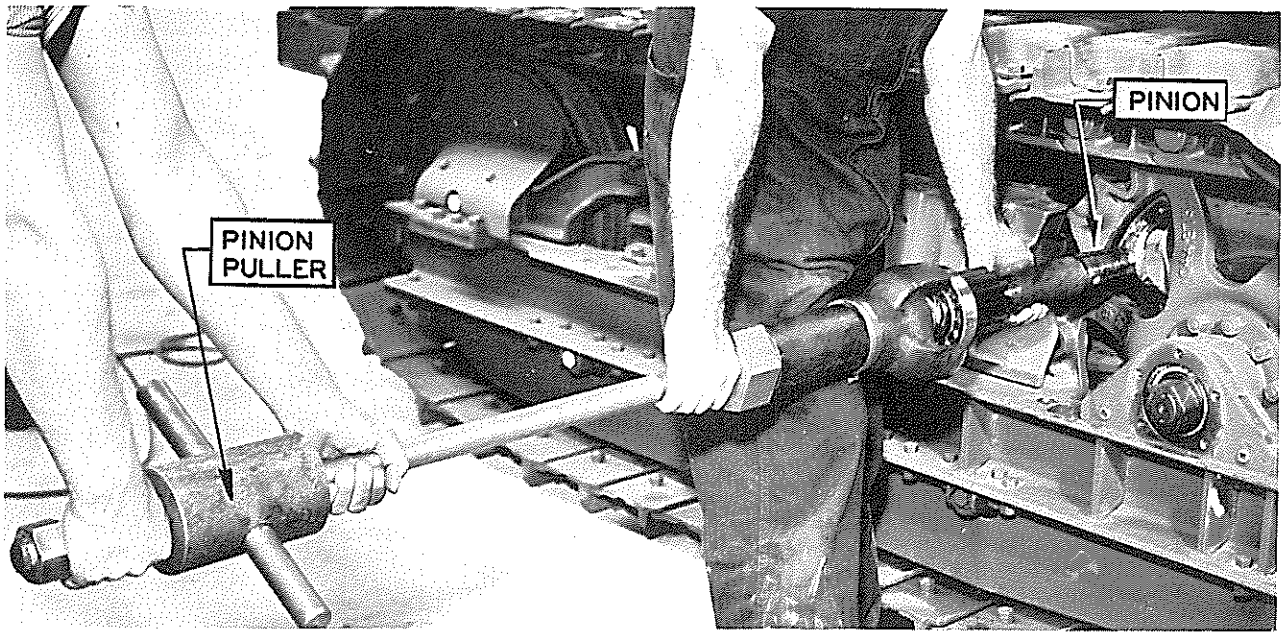

FIG. 10

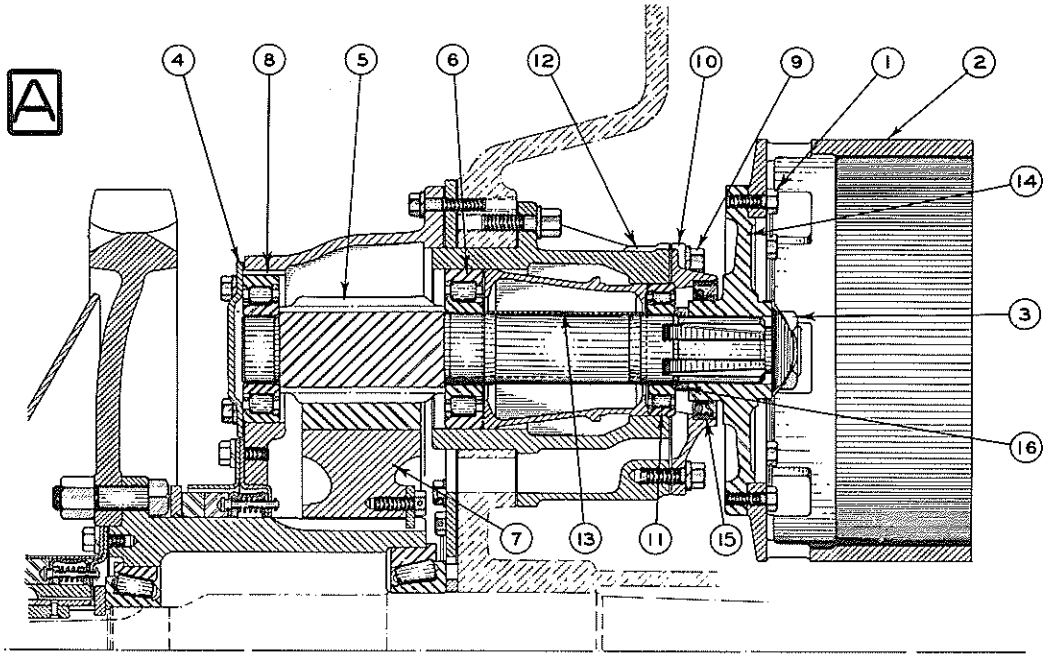

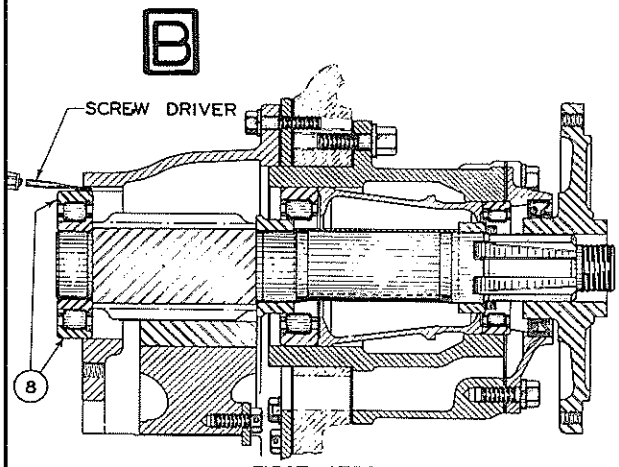

FIRST STEP

REMOVE NUT 3 FROM END OF PINION SHAFT PULL PINION OUT ONLY 3/4" REMOVE OUTER BEARING RACE AND ROLLER ASSEMBLY 8 BY PRYING WITH SCREW DRIVER IN SLOTS OF GEAR CASE SHOWN ABOVE.

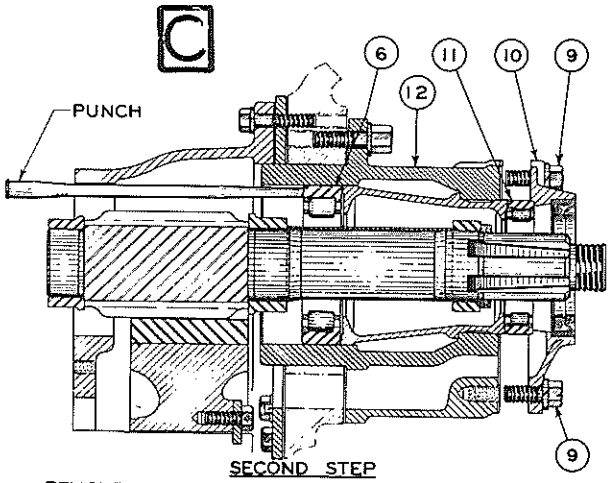

SECOND STEP

REMOVE CAPSCREW 9 SO AS TO LOOSEN RETAINER 10 DRIVE ON CENTER BEARING RACE AND ROLLER ASSEMBLY 6 SO AS TO FORCE INNER BEARING OUTER RACE AND ROLLER ASSEMBLY 11 OUT OF BEARING CAGE BORE AS SHOWN ABOVE.

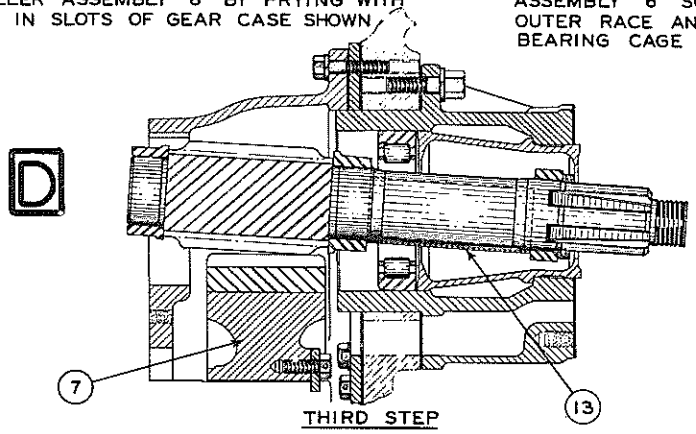

THIRD STEP

LIFT OUTER END OF PINION UP SO THAT INNER BEARING RACE OF CENTER BEARING WILL CLEAR TEETH OF FINAL DRIVE GEAR. TURN PINION SO THAT CUT OUT PART OF SPACER 13 IS AWAY FROM FINAL DRIVE GEAR. PINION MAY NOW BE REMOVED.

FIG. 11

4. Install the final drive pinion puller and pull the shaft out enough so that the ball bearing clears the case.
5. On the wide model remove the five capscrews No. 71113 which hold the bearing retainer and spacer in position. On the standard model remove the five capscrews No. 36707.
6. Move the pinion shaft sideways so that a punch can be used to move the roller bearings and spacer in as far as they will go on wide models and to move the bearing retainer on the standard models.
7. This is necessary to prevent damage to the rollers.
8. Pull the pinion shaft out almost to the sprocket. Place a piece of steel, in the shape of a horseshoe, between the ball bearing and the final drive case.
9. Use the pinion puller and drive the pinion out of the ball bearing. Remove the bearing and then finish removing the pinion.
10. In installing the pinion, first install the inner bearings and spacers, bearing retainer and tighten capscrews.
11. In the standard model replace the bearing and bearing retainer and tighten the capscrews No. 36707.
12. Install the pinion and the outer pinion bearing. Proceed in the usual manner with the remainder of the assembly.

CAUTION: We do not recommend using the No. 042890 ball bearing for service on tractors below Serial No. HD 10W-1700 because on wide models pinion design will not allow removal without first removing the final drive gear. For replacement the No. 042952 roller bearing can be used in place of the ball bearing.

In an emergency, the No. 042890 ball bearing can be used in HD 10W tractors, Serial 1397 to 1700 by installing pinion No. 047470 at the same time the ball bearing is installed.

NOTE: All lend-lease HD 10 tractors built to date have the No. 042952 roller bearing. These are Serial Nos. 1802 and 2081, inclusive. The ball bearing No. 042890 is effective again in regular production with HD 10-2082.

E. REMOVAL OF STEERING CLUTCHES (First Type Clutch Shaft Prior to "HD 10" #1516)

1. Straighten lockwashers at each end of steering clutch shaft and remove nuts with special socket.
2. Push clutch shaft either way far enough to permit one clutch to be lifted out.
3. Push shaft in opposite direction until the other clutch can be lifted out. The spacers between hub and bevel gear hub will drop into the case when the clutches are removed from the compartments. Be sure they are in place when reinstalling clutches.

F. REMOVAL OF STEERING CLUTCHES (Second Type Clutch Shaft, "HD 10" #1516 and above)

1. If only one steering clutch is to be removed, always pull opposite pinion, using special Pinion Puller.

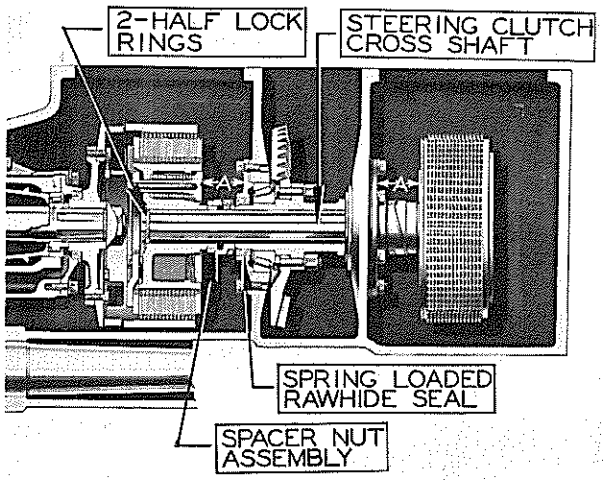

FIG. 12

2. Only one pinion need be pulled when removing both clutches.
3. Follow instructions in Paragraph "B" on HD 10 standard tread. For HD 10-W Wide gauge in Paragraph "C."
4. Cut lockwire and back out capscrew in spacer nut assembly far enough to clear spline shaft.
5. Screw one adjusting screw nut toward

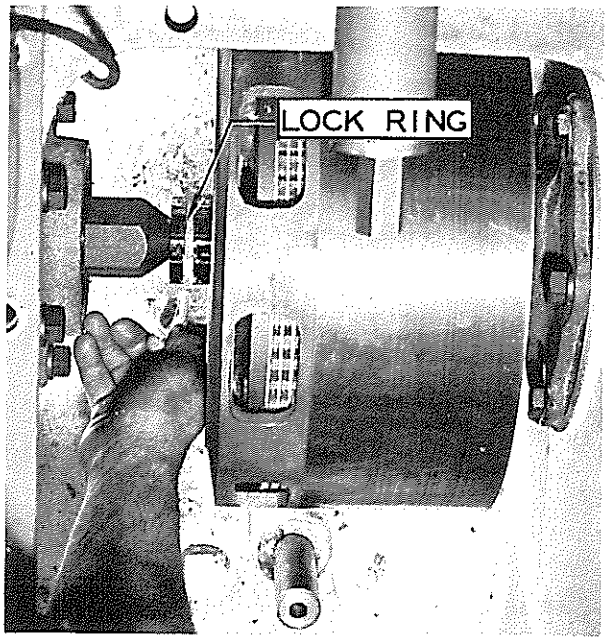

FIG. 13

bevel gear hub as far as it will go.

6. Now slide clutch toward bevel gear hub on shaft, and remove split lock rings, push shaft through other. and remove the other lock rings.
7. The shaft can now be removed.
   NOTE: A tapped hole, the same size as one in the final drive pinion, is provided in each end of steering clutch shaft, as shown.

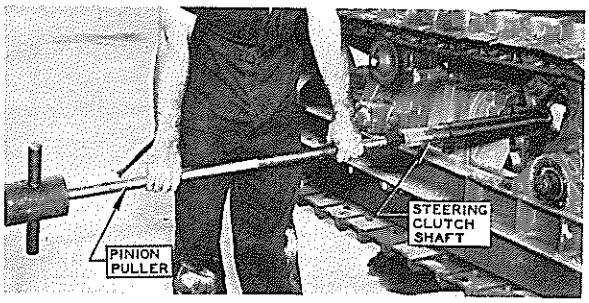

FIG. 14

8. Now the steering clutches can be removed from compartment.

G. DISMANTLE STEERING CLUTCHES:

1. Remove drum from clutch assembly taking care not to bend or break the clutch disc teeth.
2. Remove lockwire from 9 capscrews and remove 3 capscrews equally spaced from each other. Install, as shown, 3 studs, 7″ long, which have 1″ N.F. threads on one end and 3″ N.C. threads on other end. Install the end with 1″ thread in the shifter plate.

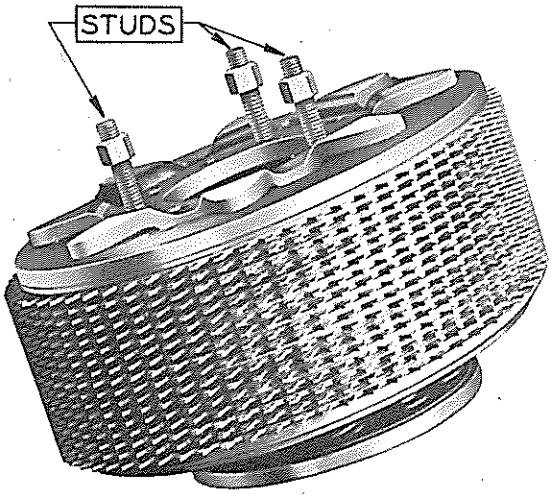

FIG. 15

3. Install nuts on studs and tighten down against pressure plate.
4. Remove remaining capscrews; loosen the stud nuts EVENLY until all tension is taken off the clutch springs.
5. The pressure plate, discs, etc., can now be removed.

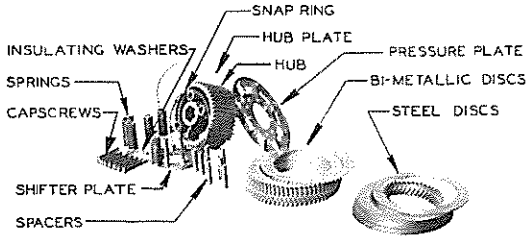

FIG. 16

H. INSPECTION OF STEERING CLUTCH AND BEVEL GEAR HUB PARTS:

When the clutches have been removed and dismantled inspect the following items:

1. BI-METALLIC FRICTION DISCS: These discs are made of a steel center with bi-metallic bonded to the steel. Thickness when new is approx. $\frac{5}{16}$″. Inspect discs for wear and metal flaking. If over-all thickness of disc is less than ⅛″ or if the metal has flaked off at any point a new disc should be installed.
2. HYCO FRICTION DISCS: These discs are made of a steel center with wire mesh woven lining, bonded to the steel. Thickness when new is approx. $\frac{3}{16}$″. Inspect discs for wear and material coming loose. If over-all thickness of the disc is less than $\frac{5}{32}$″ or if the material has come loose at any point a new disc must be installed.
3. RAYBESTOS FRICTION DISCS: These discs are made of a solid piece, wire mesh and molded material. The over-all thickness when new is approx. $\frac{3}{16}$″. Inspect discs for wear, condition of teeth, and oil saturation. If over-all thickness of discs is less than $\frac{5}{32}$″, or the teeth are in bad condition, new discs must be installed.
4. BRAKE DRUMS: Clean thoroughly and inspect. If drums are scored or grooved on the outer surface they can be chucked in a lathe and turned down. In doing this do not take off more than $\frac{1}{16}$″ of material and extend the cut only to the ventilating holes. To remove any material from between the ventilating holes will materially weaken the drum.
5. BEVEL GEAR BEARINGS: Inspect for loose bearings, observing play when prying on clutch shaft. When doing this, be sure the hub packing is loosened or removed so that it does not prevent the detection of any play that may be present in the bearings. For bearing adjustment refer to Topic 103-L.
6. BEVEL GEAR HUB PACKING: (PRIOR TO HD 10-1516) Inspect for proper adjustment and serviceable condition. If packing leaks, tighten adjusting nuts only enough to stop leak. If

packing is worn out, adjusting nuts will screw in all the way without stopping leaks; new packing must be installed.

7. BEVEL GEAR HUB SEALS: (HD 10-1516 ABOVE) This is a rawhide spring loaded seal, and cannot be adjusted. If this seal leaks oil the bevel bearings must be inspected for proper clearance; adjust if necessary and install new seals.
8. CLUTCH SPRING: Inspect tension of spring by measuring its "free height," that is, its height when standing upright with nothing compressing it. If this length is 3-15/16" or greater the spring can be re-used. If it is less than 3-15/16" it is an indication that the spring has lost its tension and new springs should be installed.

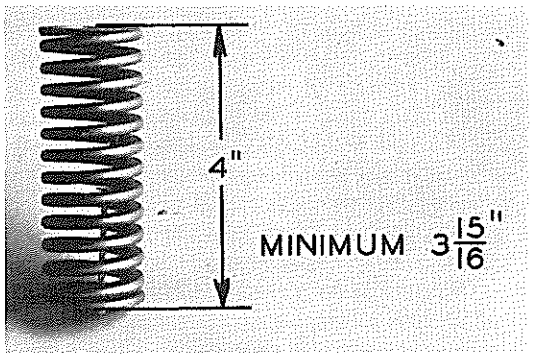

FIG. 17

9. CLUTCH THROWOUT BEARINGS: Inspect for wear or lack of lubrication. Install new bearings if necessary.
10. SPLINE SHAFT: Inspect splines for burrs. Be sure nuts will start on thread freely.

I. ASSEMBLY OF STEERING CLUTCH:

1. Place steering clutch hub on bench or some flat surface with spring holes up.
2. Install an insulating washer in each hole. Make sure the washers lie flat in the bottom of the hole.

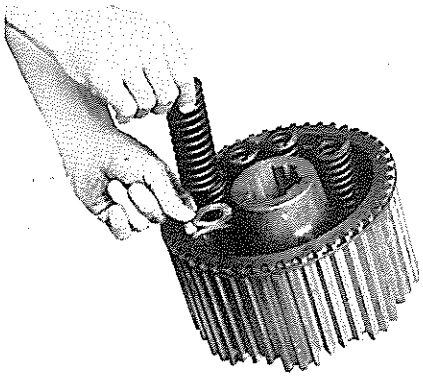

FIG. 18

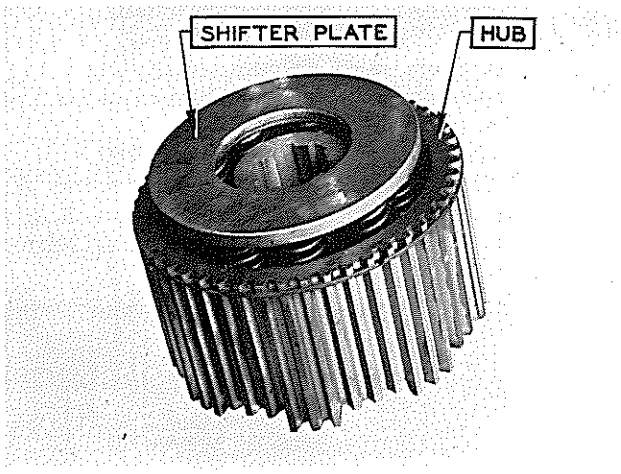

FIG. 19

3. Install a spring in each hole.
4. Install shifter plate on springs with flat surface up.
5. Hold shifter plate firmly in place and turn hub assembly so that shifter plate is now on bench.
6. Install a spacer in each hole in hub through center of springs.

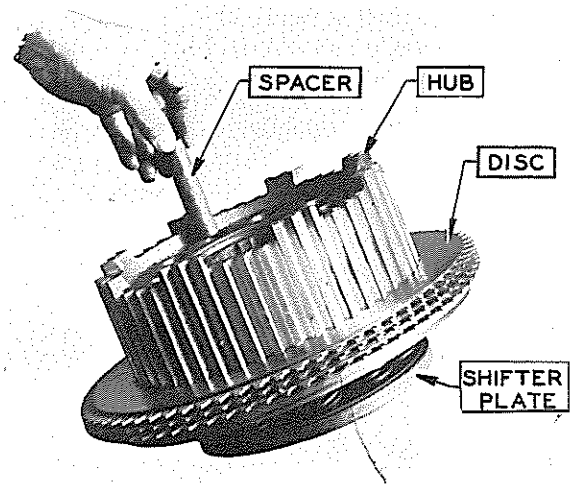

FIG. 20

7. Stack discs alternately on hub beginning with a friction disc.
   NOTE: Any friction disc that can be used again should be stacked on hub first and new discs toward the top. (See inspection of steering clutches). Stack discs on hub until stack height is $4\frac{3}{16}$" plus or minus $\frac{1}{16}$".
8. Lay pressure plate in place and screw 3 studs into the shifter plate equally spaced, as shown.
9. Line up teeth on clutch discs so brake drums will slide up and down on discs freely.
10. Run nuts down on studs, forcing pressure plate down until capscrews reach

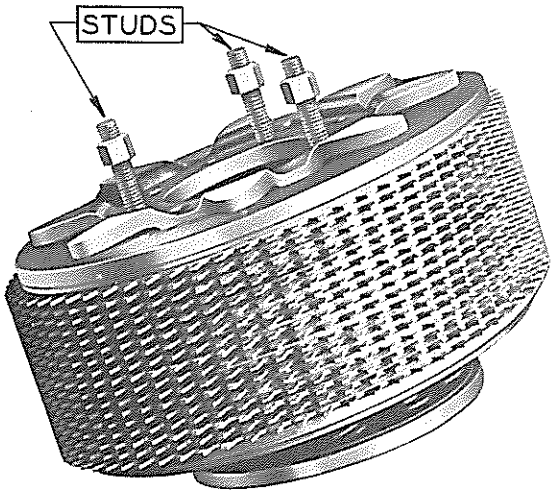

FIG. 21

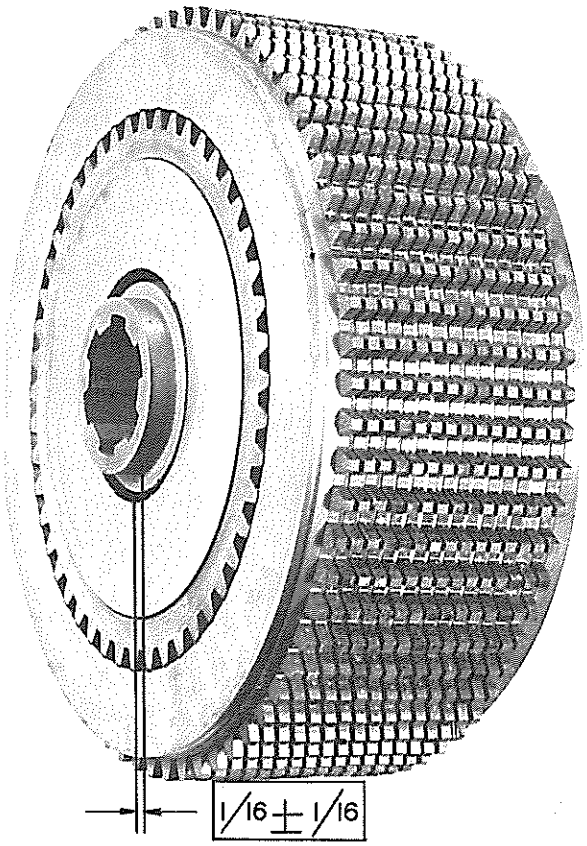

FIG. 22

the threaded holes in the shifter plate.

11. Install 6 capscrews and tighten, remove the studs and install the 3 remaining capscrews. Draw the 9 capscrews down securely and install lockwire. Repeat the same operation for the other clutch.

J. INSTALLATION OF STEERING CLUTCHES (First Type Clutch Shaft Prior to "HD 10" #1516)

1. With the 9 capscrews in clutch assembly facing upward, place steering clutch brake drum down over clutch assembly.

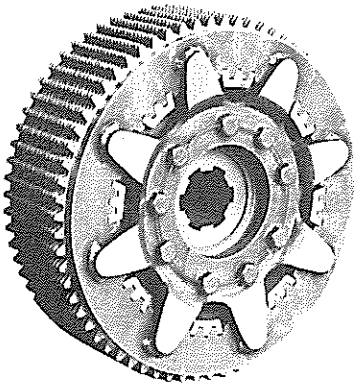

FIG. 23

Place in compartment with capscrews toward final drive.

2. Install clutch shaft in bevel gear hub from opposite side and push through far enough to place spacer on end of shaft.

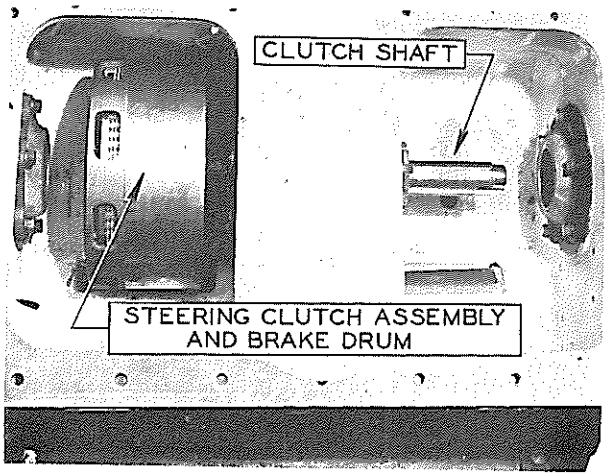

FIG. 24

3. Lift clutch assembly up to align the hole in the clutch hub with shaft. Push shaft through clutch hub taking care not to damage the threads on the shaft. The clutch will have to be rotated to get the splines on the shaft to line up with the splines in steering clutch hub.
4. Push shaft through until the other clutch can be lowered into the other compartment. Install other spacer and clutch on shaft.
5. Install thick washer, lockwasher (with cup part out) and nut on one end of shaft. Run nut on as far as possible and lock in two places.
6. Install washer, lockwasher and nut on the other end; draw the latter nut up tight with the special wrench and lock in two places.

K. INSTALLATION OF STEERING CLUTCHES (Second Type Clutch Shaft, "HD 10" #1516 and above)

1. With the 9 capscrews in clutch assembly facing upward, place steering clutch brake drum down over clutch assembly. Place in compartment with capscrews toward final drive.
2. Place steering clutch assembly in compartment and slide clutch shaft through final drive case and through spline bore in clutch hub.

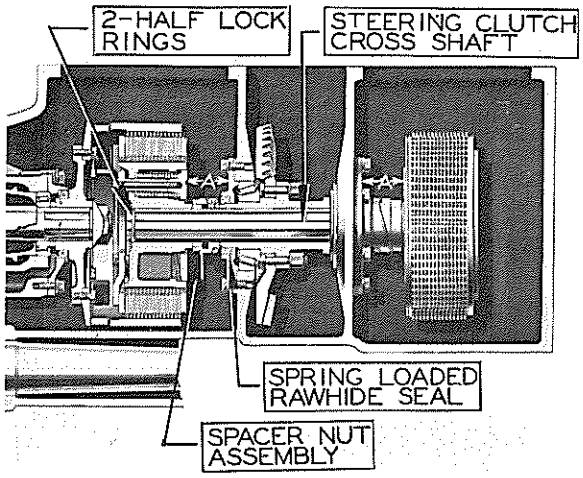

FIG. 25

3. Install adjustable spacer nut assembly over splines on shaft, sliding shaft through bevel gear hub.
4. Install the other adjustable spacer nut assembly on opposite side, and push shaft through other clutch assembly.
5. Install the split lock rings in place, at the ends of shaft and slide the clutches out so rings fit into counterbore of clutch hub.
6. Adjust the spacer nuts on both sides equally so the dimensions between clutch throwout plate and bevel case are equal on both sides.
7. When installing the locking capscrews in the spacer nuts, be sure they fit into one of the splines on the clutch shaft.
8. Lock capscrews securely with lockwire.

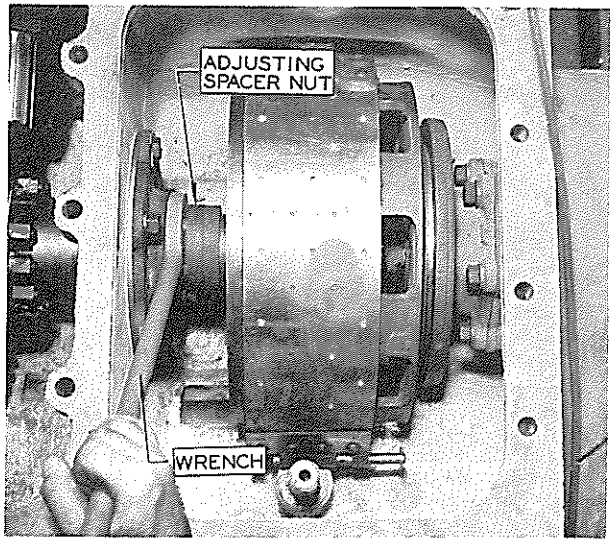

FIG. 26

L. INSTALLATION OF FINAL DRIVE PINIONS: Standard Tread Tractors.

1. Install pinion through inner bearing far enough to place Duprene seal over end of shaft.
2. Lift hub and align splines with splines on the pinion shaft. Push driven hub into rawhide seal and hold firmly by placing a bar on each side of the hub and prying it toward the pinion.
3. With the aid of the pinion puller adaptor, puller screw and ram assembled to pinion,drive the pinion in until the lockwashers and cap nut can be started on the shaft.
4. Drive pinion shaft through hub with the ram holding against hub with bars and tighten nut at intervals until shaft and nut are tightened securely. Place a 4 foot extenstion on wrench and give the nut a final pull. Bend the lockwashers over in two places on hub and two places on nut and remove pinion puller parts.
5. Install bearing on outer end of shaft. Install cover and gasket over end of pinion shaft.
6. Replace sprocket shield and axle cap. From this point reverse dismantling procedure covered in Topic 106-A, 1 to 20.
7. Before replacing steering clutch ventilating covers, adjust the clutches. Refer to Topic 56.
8. Before replacing brake adjusting covers adjust the brakes. Refer to Topic 58-A.

M. INSTALLATION OF FINAL DRIVE PINIONS: Wide Tread Tractors. (Fig. 11)

1. Stack the driven hub (14), retainer (10), oil slinger (15), rubber seal (16), and outer race and roller assembly of the inner bearing (11) together and pilot into the bore of the bearing cage (12).
2. Feed the pinion in and start spline on pinion into splined bore of driven hub (14).
3. Feed pinion in until the inner race of center bearing (6) enters the outer race and roller assembly.
4. The center bearing (6) outer race and roller assembly and rear bearing outer race and roller assembly (11) may now be pressed into place by drawing down on retainer (10).
5. Install the outer bearing (8). Install nut and lockwasher (3) on end of pinion shaft, draw up nut and lock it.
6. Bolt brake drum (2) to driven hub

(14) and replace outer bearing cover (4).

7. Install sprocket guard and end cover.

N. INSTALLATION OF BRAKES:

1. Install the bands around the front side of drums. Care must be taken that brake bands fit drum after being installed.
2. Install the anchor screw and lock at the front side of clutch compartment of transmission case.
3. Install fulcrum sleeve and bell crank assembly.
4. Install band pins and keys.
5. Install brake rod,, felt washer, steel washer, spring and adjusting nut.
6. For brake adjustments refer to Topic 58-A.
7. Install other parts that were removed.
8. For steering clutch adjustment refer to Topic 56-B.

107 --"HD 14" Steering Clutches and Brakes

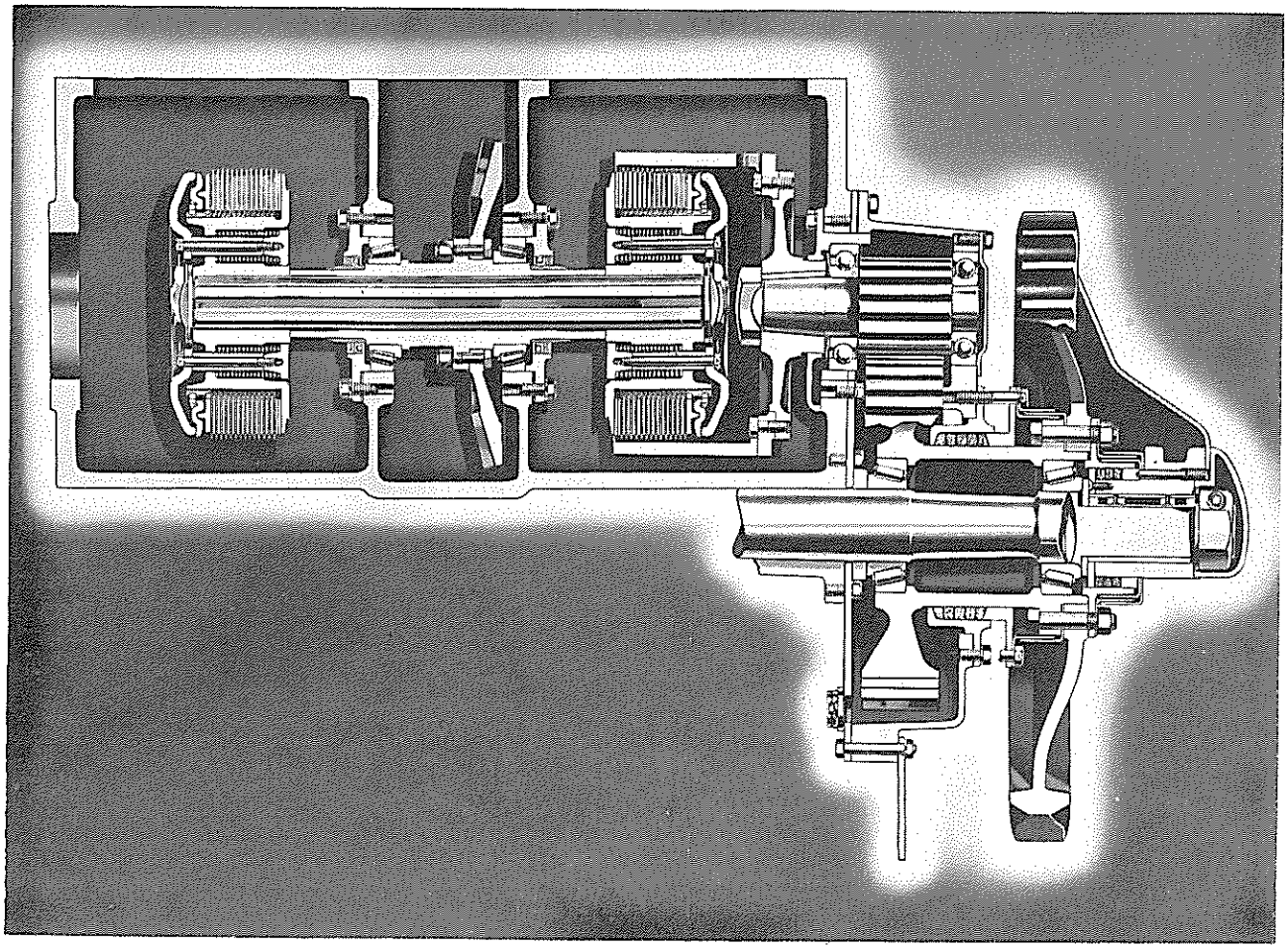

FIG. 1

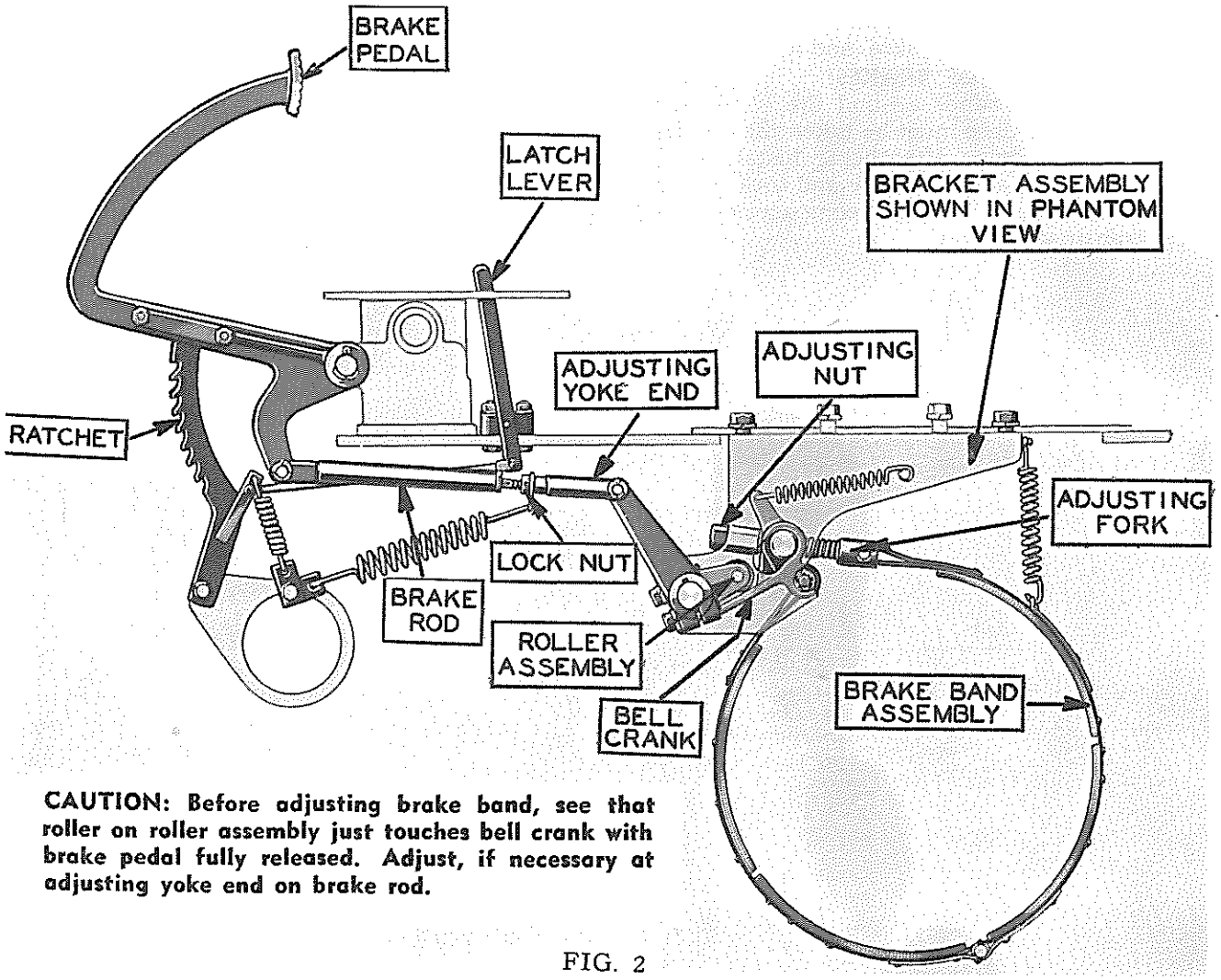

CAUTION: Before adjusting brake band, see that roller on roller assembly just touches bell crank with brake pedal fully released. Adjust, if necessary at adjusting yoke end on brake rod.

FIG. 2

A. REMOVAL OF BRAKES:

1. Shut fuel off under tank by turning shut off cock handle to "OFF" position.
2. Disconnect fuel lines under tank.
3. Disconnect both inlet and outlet lines at filters under seat and remove filters by taking out 3 bolts holding filters to rear fenders.
4. Remove seat frame by taking out 3 capscrews on each side holding seat to fuel tank, the 3 bolts holding seat frame to rear fender and the 2 bolts holding floor plate to front of seat frame.
5. Remove clamp bolt holding return line to rear of seat frame.
6. Remove rear fender brackets by taking out 3 capscrews and 4 bolts from each side.
7. Remove 9 capscrews and 2 bolts from rear floor plate.
8. Remove ventilating cover from top of steering clutch cover by taking out 4 capscrews.
9. Remove jam nuts from grease tubes which come up through steering clutch cover assembly.

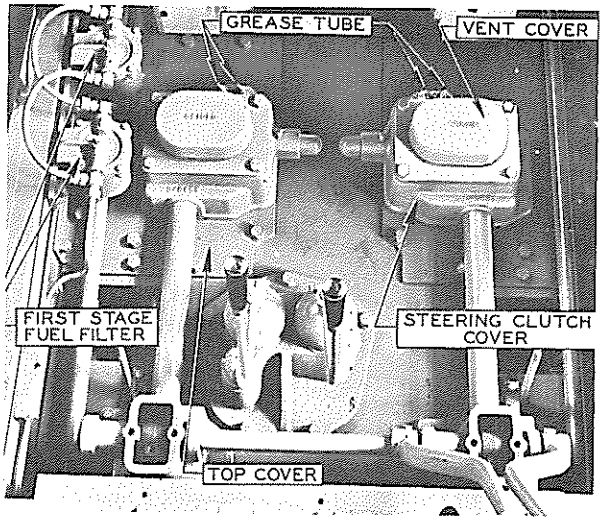

FIG. 3

10. Loosen steering clutch adjusting screw lock bolts at top of throwout fork and back adjusting screw out far enough to pass by thrust pin; unhook throwout

fork spring from dowel in top of case.

11. Hold rod connector and loosen jam nut; back screw out of connector.
12. Remove steering clutch covers by taking out 2 capscrews in each.

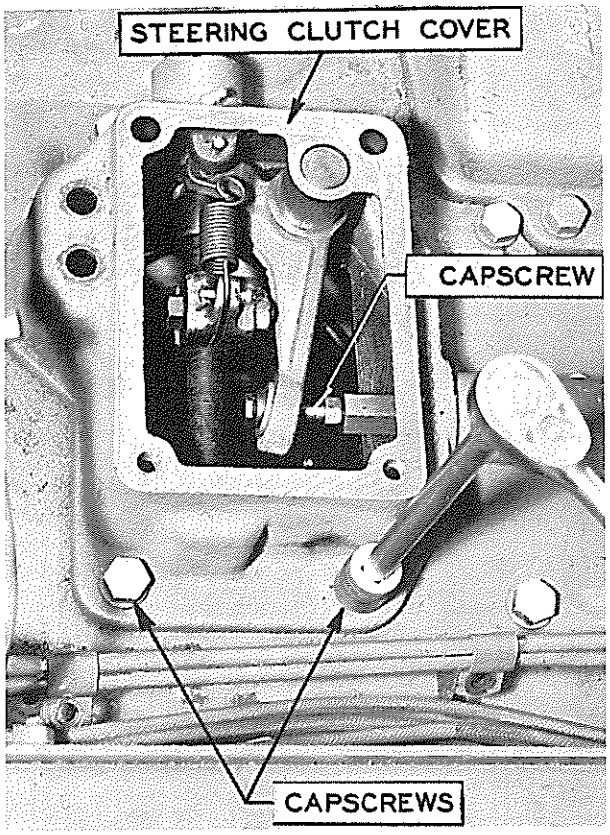

FIG. 4

13. Remove 9 capscrews in each top cover and remove covers.
14. Lift out steering clutch throwout forks.
15. Remove equalizers in bottom of each clutch compartment by removing bolt which comes up through bottom of transmission case.
17. Move brake bracket assembly back until band pins can be removed. Remove band pins and unhook spring from brake band; take out bracket and adjusting linkage.
18. Pull band out around brake drum from rear.

B. REMOVAL OF STEERING CLUTCHES:

1. Remove brakes, see Topic 107-A.
2. Remove capscrews holding brake drum to driven hub on each side. Now the drum can be pushed away from the driven hub.
3. Remove axle end covers and sprocket guards.
4. Remove covers from outer end of pinion shaft by taking out 5 capscrews.

C. REMOVAL OF FINAL DRIVE PINIONS:

PULL FINAL DRIVE PINIONS FROM EACH SIDE (Prior to HD 14-1156) TO

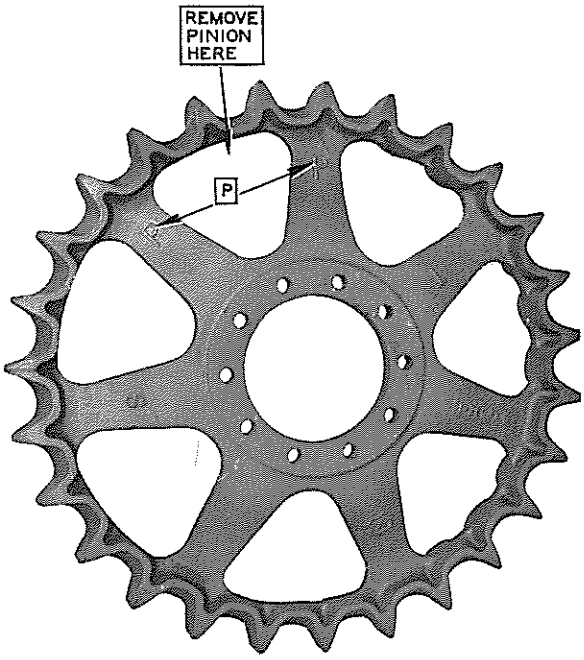

FIG. 5

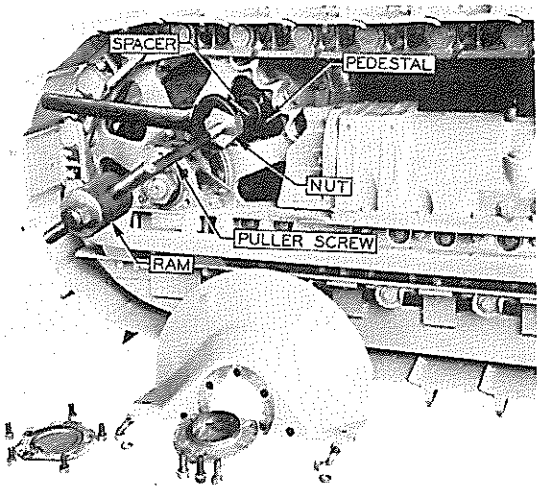

FIG. 6

REMOVE BOTH STEERING CLUTCHES.

PULL ONLY ONE FINAL DRIVE PINION (HD 14-1156 and above) TO REMOVE BOTH STEERING CLUTCHES PROCEED AS FOLLOWS USING SPECIAL PINION PULLER.

1. Screw adapter into end of pinion shaft and tighten securely.
2. Loosen pinion nut four or five turns.
3. Turn the sprocket around until the pinion lines up between the 2 spokes marked "P." Set the pedestal in place over the adapter and screw the puller bolt into the adapter.
4. Tighten the puller nut; use a 4 foot extension on the end of the wrench. Tighten the nut until there is a good

strain on the puller and jar the pinion loose by using the puller ram as shown.

5. Remove the pinion nut.
6. Pull the pinion out until the pinion bearing clears the case ⅜".
   NOTE: It is advisable to block hub in place by placing blocks between hub and steering clutch assembly.
7. Place slotted ring between the bearing and final drive case. Now drive pinion back in until the pinion bearing comes off.
8. Remove pinion from tractor.
9. Remove driven hub from steering clutch compartment.

D. REMOVAL OF STEERING CLUTCH SHAFT (First Type Prior to "HD 14" #1156)

1. Straighten lockwashers at each end of steering clutch shaft and remove nuts.

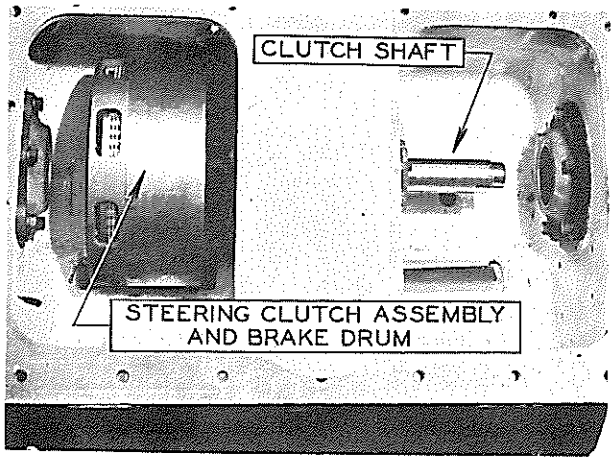

FIG. 7

2. Push clutch shaft either way far enough to permit one clutch to be lifted out. Push shaft in opposite direction until the other clutch can be lifted out.

E. REMOVAL OF STEERING CLUTCH SHAFT (Second Type "HD 14" #1156 and above)

1. If only one clutch is to be removed, pull drive pinion from side opposite that which the clutch is to be removed.
2. Brake band need not be removed from clutch that remains in tractor.
3. Cut lockwire and unscrew capscrew in

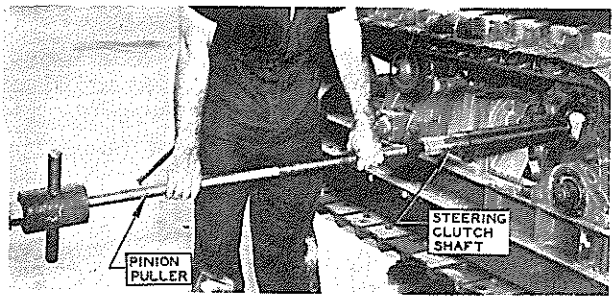

FIG. 8

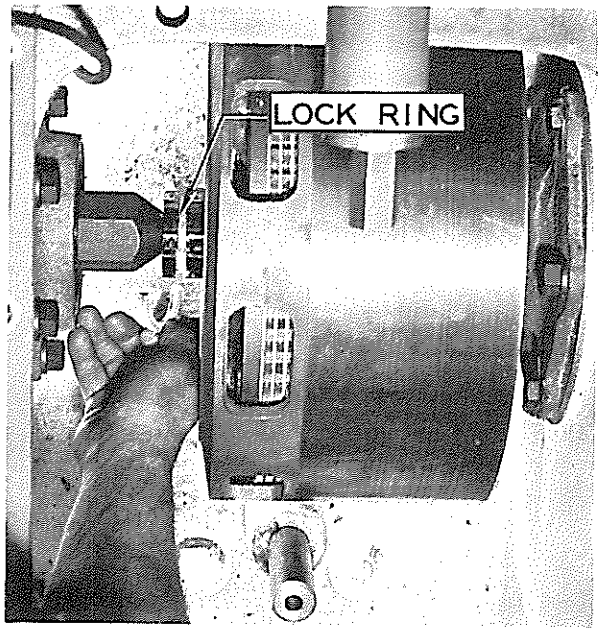

FIG. 9

spacer nut far enough to clear splined clutch shaft.

4. The spacer nut can now be screwed away from clutch hub so that clutch may be pushed toward bevel gear hub sufficient to remove split rings on each end of clutch shaft.
5. Install pinion puller in end of clutch shaft and pull shaft far enough to clear steering clutch assembly.
6. Clutch may now be removed.

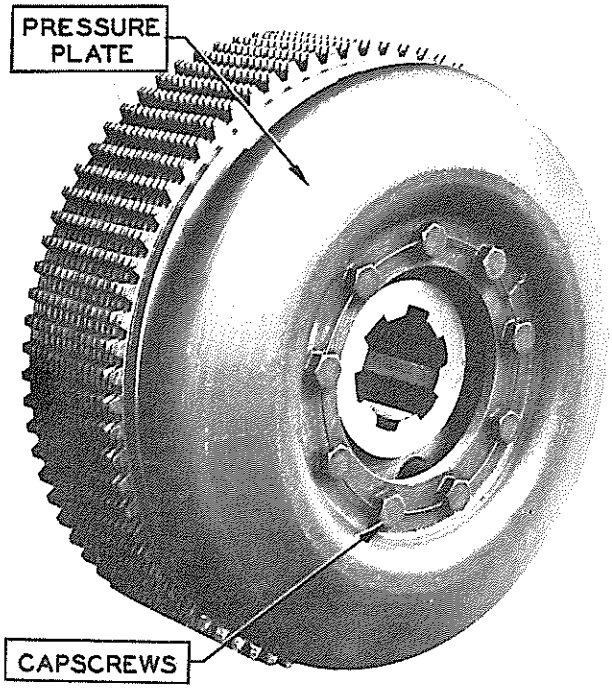

FIG. 10

F. DISMANTLE STEERING CLUTCHES:
(Prior to "HD 14" #2079)

1. Remove drum from clutch assembly taking care not to damage clutch disc teeth.
2. Remove lockwire and unscrew 3 of the 9 capscrews. Select 3 that are equally spaced.

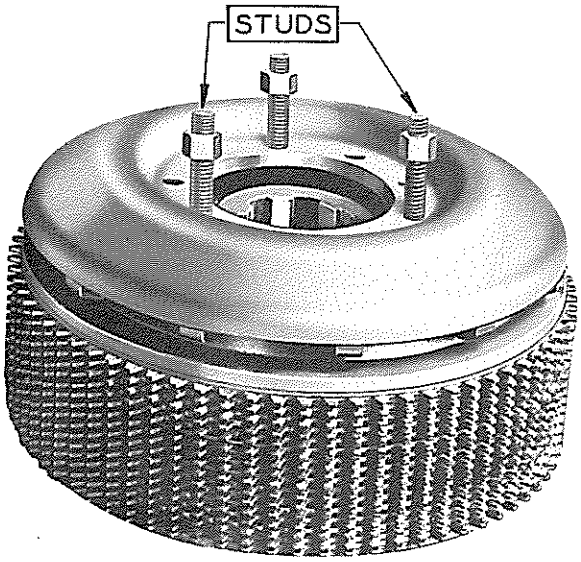

FIG. 11

3. Install 3—7" studs in these holes as shown. The studs should have 1" N.F. threads on one end and 2½" N. F. threads on the other end. Install 1" N.F. thread in the shifter plate.
4. Install nuts on studs and tighten down against pressure plate.
5. Remove remaining capscrews; then loosen the stud nuts evenly until all tension is taken off the clutch springs, and remove studs.
6. Remove the pressure plate. Remove the snap ring holding the fulcrum ring in place. Now the discs, springs, etc., can be disassembled.

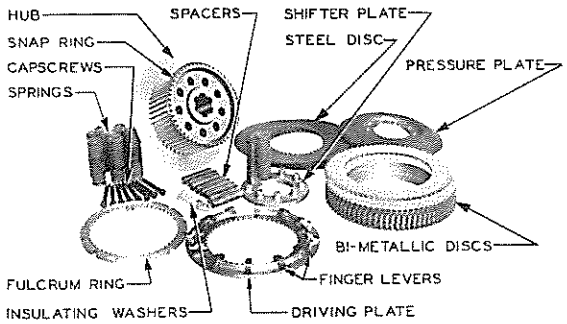

FIG. 12

G. INSPECTION OF STEERING CLUTCH AND BEVEL GEAR HUB PARTS:

When the clutches have been removed and dismantled inspect the following items:

1. BI-METALLIC FRICTION DISCS: These discs are made of a steel center with bi-metallic material bonded to the steel. Thickness when new is approx. $\frac{5}{32}$". Inspect discs for wear and metal flaking. If over-all thickness is less than ⅛" or if the metal has flaked off at any point a new disc should be installed.
2. HYCO FRICTION DISCS: These discs are made of a steel center, with wire mesh woven lining, bonded to the steel. Thickness when new is approx. $\frac{3}{16}$". In spect discs for wear and material coming loose. If over-all thickness of disc is less than $\frac{5}{32}$" or if the material has come loose at any point a new disc must be installed.
3. RAYBESTOS FRICTION DISCS: These discs are made of a solid piece, wire mesh and molded material. The over-all thickness when new is approx. $\frac{3}{16}$". Inspect discs for wear, condition of teeth, and oil saturation. If over-all thickness of disc is less than $\frac{5}{32}$", or if the teeth are in bad condition, new discs must be installed.
4. BRAKE DRUMS: Clean thoroughly and inspect. If drums are scored or grooved on the outer surface they can be chucked in a lathe and turned down. In doing this do not take off more than $\frac{1}{16}$" of material and extend the cut only to the ventilating holes. To remove any material from between the ventilating holes will materially weaken the drum.
5. BEVEL GEAR BEARINGS: Inspect for loose bearings observing play by prying on clutch shaft. When doing this be sure the hub packing is loosened or removed so that it does not prevent the detection of any play that may be present in the bearing. For bearing adjustment refer to Topic 104-L.
6. BEVEL GEAR HUB PACKING: (Prior to HD 14-612) Inspect for proper adjustment and serviceable condition. If packing leaks, tighten adjusting nuts only enough to stop leak. If packing is worn out, adjusting nuts will screw in all the way without stopping leaks; new packing must be installed.
7. BEVEL GEAR HUB SEALS: (HD 14-612 and above) This is a rawhide spring loaded seal, and cannot be adjusted. If this seal leaks oil, the bevel gear bearings must be inspected first for proper clearance, adjust if necessary and install new seals.
8. CLUTCH SPRINGS: (Prior to HD 14, 2079) Inspect tension of spring by measuring its "free height," that is, its height when standing upright with nothing compressing it. If this length is 5¼" or greater the spring can be re-

used. If it is less than 5¼" it is an indication that the spring has lost its tension and new springs should be installed.

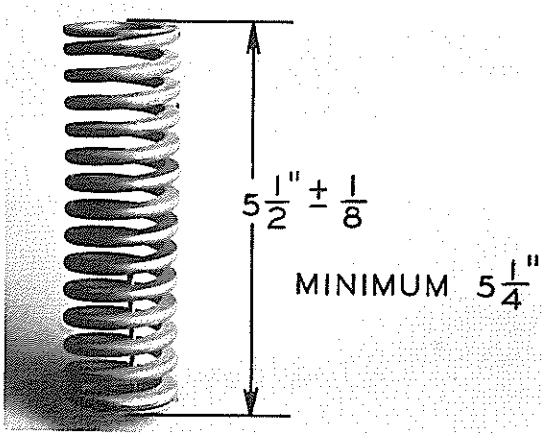

FIG. 13

9. CLUTCH SPRINGS: (HD 14: **2079** and above) Inspect spring by measuring its "free height," that is, its height when standing upright with nothing compressing it, as shown in Fig. 14. The maximum free height is 6 11/16". The minimum free height is 6¼". If it is less than 6¼", it is an indication that the spring has lost its tension and new springs should be installed.
10. CLUTCH THROWOUT BEARINGS: Inspect for wear or lack of lubrication. Install new bearings where necessary.

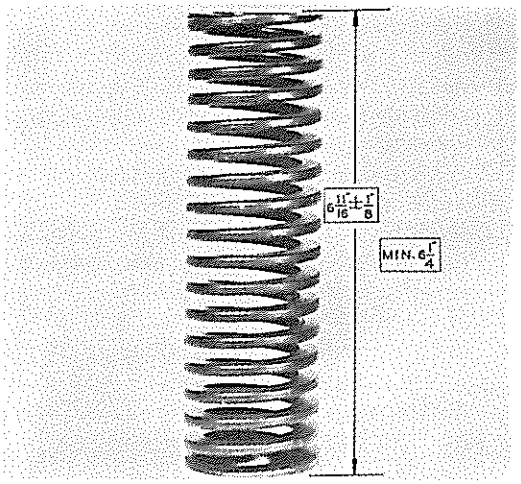

FIG. 14

11. SPLINE SHAFT: Inspect splines for burrs. Be sure nuts will start on threads freely.

H. ASSEMBLY OF STEERING CLUTCH:
(Prior to "HD 14" # 2079

1. Place steering clutch hub on bench or some flat surface with spring holes up. Fig. 15.
2. Place 3 insulating washers in each hole.

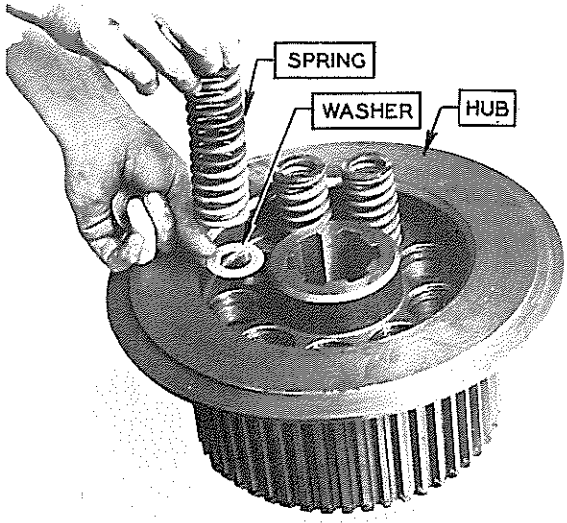

FIG. 15

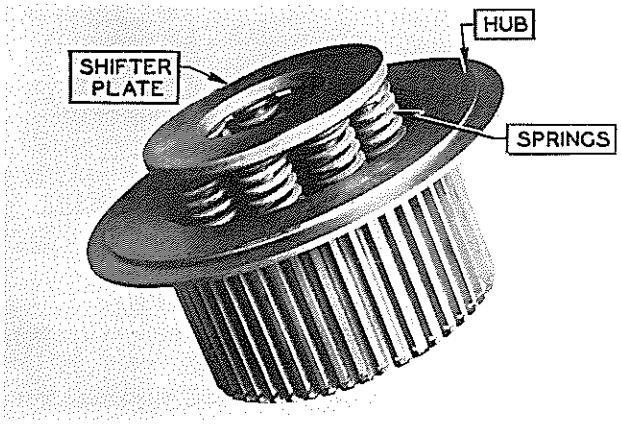

FIG. 16

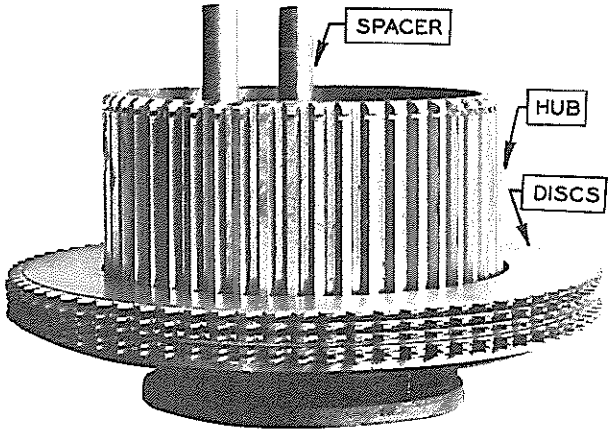

FIG. 17

Make sure the washers lie flat in the bottom of the hole.

4. Set shifter plate down on springs with flat surface up.
5. Hold shifter plate firmly in place and turn hub assembly so that shifter plate

is now on bench.

6. Place a spacer in each hole in hub through center of springs.
7. Stack discs alternately on hub beginning with two friction discs.
   NOTE: Any friction discs that are worn but can be used again should be stacked on hub first and new discs toward the top where the most wear occurs. (See inspection of steering clutches). Stack discs on hub until stack height is 3⅞" plus or minus $\frac{1}{16}$".
8. Install driving plate over hub on disc; space the finger levers equally around the plate.
9. Install fulcrum ring and snap ring. Be sure the snap ring is in far enough to allow the fulcrum ring to slide up and down. Peen over three hub teeth to hold the snap ring in place.
10. Install pressure plate; install three long studs equally spaced as shown.
11. Line up the clutch disc teeth so the brake drum will slide up and down freely.
12. Run the nuts down on the studs until completely compressed and see if the shifter plate is in $\frac{3}{16}$" plus or minus $\frac{1}{16}$" from the outside surface of the hub, as shown in Fig. 20.
    NOTE: Steel discs can be added to obtain this measurement.

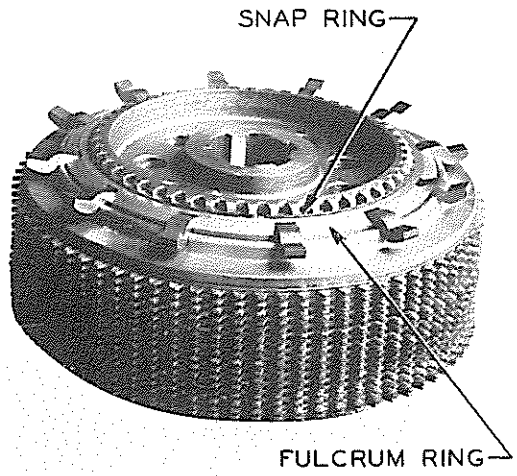

FIG. 18

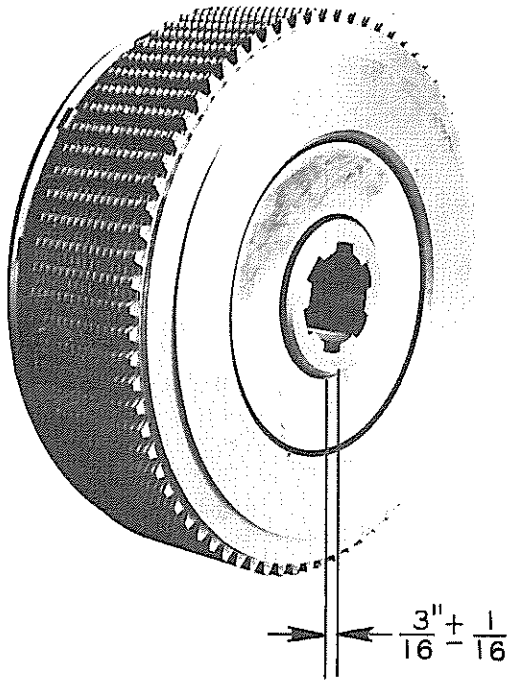

FIG. 20

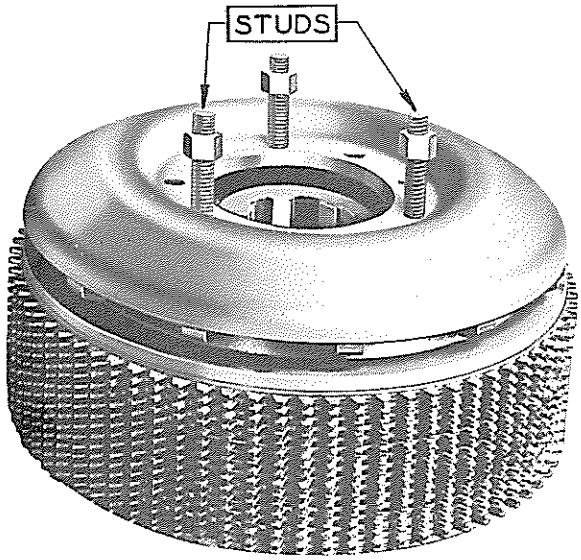

FIG. 19

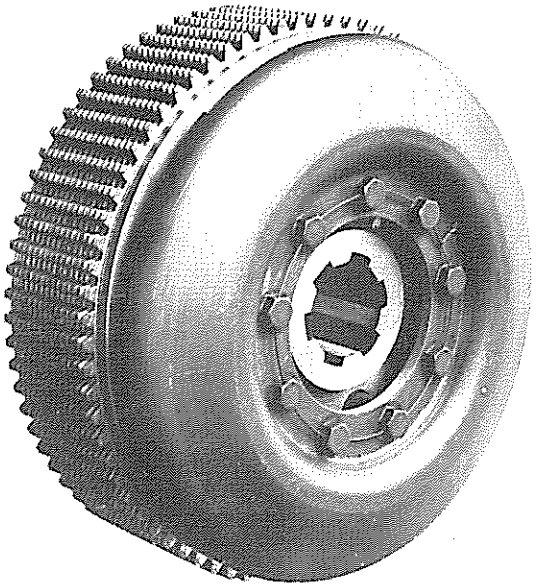

FIG. 21

13. After obtaining the right dimension install 6 capscrews and tighten. Remove the 3 studs and install the 3 remaining capscrews and tighten. Install lock wire in the capscrew heads. Repeat the same operations for the other clutch.

I. STEERING CLUTCH: Ventilated. Adjustable Type (Effective with "HD 14" #2079 and above)

DESCRIPTION: This is an adjustable ventilated type clutch, incorporating an adjustable plate that permits longer clutch life before clutches need rebuilding.

The adjustable plate is located next to the hub flange, which is tapped to accommodate the "adjusting screws" furnished. A slipping clutch indicates that friction discs have worn, allowing the working length of pressure springs to increase so they no longer apply sufficient pressure on friction discs.

The adjusting screws furnished should now be installed to restore normal spring pressure. Installation of the screws moves the disc stack to the outer end of clutch and the shifter plate returns to its original position in relation to clutch hub.

To determine when friction discs are worn enough to permit adjusting screw installation, inspect relation of shifter plate to clutch hub face, as shown. Screws can be installed without removing clutches from the tractor. Remove only steering clutch covers. The shifter plate must extend out beyond face of hub 1/8" before attempting to use the screws. For the first adjustment use the screws, furnished. If second adjustment is practical, longer screws can be obtained under part No. 048220.

J. DISASSEMBLY OF STEERING CLUTCHES: Ventilated Adjustable Type.

1. Remove drum from clutch assembly taking care not to damage clutch disc teeth.
2. Remove lockwire and three of the nine capscrews equally spaced.
3. Install three clutch disassembling studs as shown in Fig. 19.
4. Install nuts on studs and tighten down against pressure plate.
5. Remove the six remaining capscrews, then loosen the stud nuts evenly until all tension is taken off the clutch springs and remove studs.
6. Now pressure plate, discs, springs, etc. can be removed.
7. Remove the adjusting screws from flange in hub and keep for future use. Refer to Topic 107-A for inspection of parts.

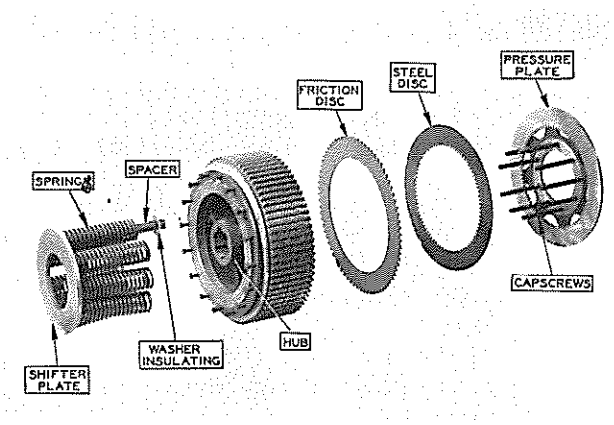

FIG. 22

K. ASSEMBLY OF STEERING CLUTCHES: (Ventilated Adjustable Type. Effective with "HD 14" #2079 and above.)

1. Place steering clutch hub on bench or some flat surface with spring holes up.
2. Be sure adjusting screws are removed from the adjusting flange hub. These adjusting flange screws should be kept for future use.
3. Place one insulating washer in each hole. Make sure the washers lie flat in bottom of the hole.
4. Place a spring in each hole.
   NOTE: Clutch spring maximum free height 6-11/16", minimum free height 6¼". Install new springs if the old springs are below minimum free height.

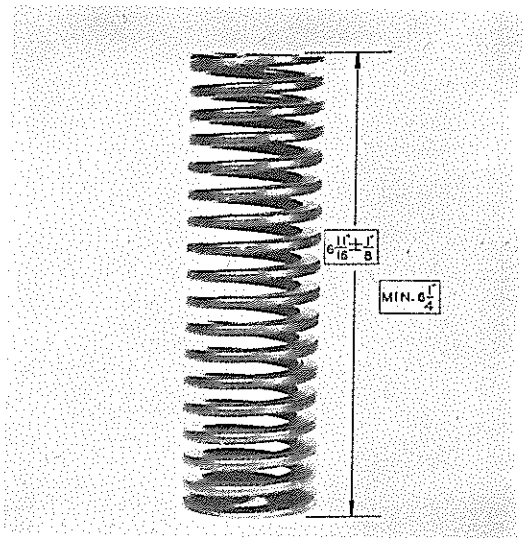

FIG. 23

5. Set shifter plate down on springs with flat surface up, make sure the tapped holes are clean and threads are in good condition.
6. Hold shifter plate firmly in place and turn entire hub assembly over so that shifter plate is now on bench.
7. Place a spacer in each hole through

center of springs.

8. Install adjusting plate on hub.
9. Stack discs alternately on hub beginning with a friction disc. 18 Raybestos friction discs and either 17 or 18 steel discs will be required. The top disc on the stack may be either a steel or friction disc, depending on what is required to obtain the correct dimension at "A," see Fig. 24.

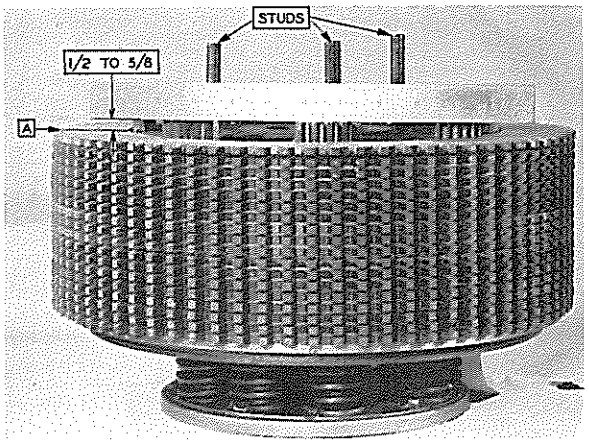

FIG. 24

10. Measure the distance at "A" as shown. This distance must be ½" to ⅝" for proper operation and maximum clutch life. If necessary, add steel discs to bring dimension "A" within the limits given.
11. Install the pressure plate and install three assembling studs as shown.
12. Line up the teeth on all discs, and slide the brake drum up and down over them, to make sure the brake drum will go on after the clutch is assembled.

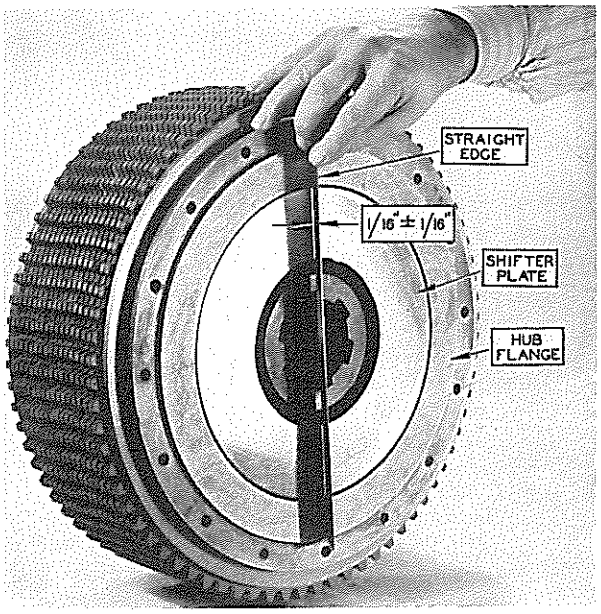

FIG. 25

13. Run the stud nuts all the way down, making sure the clutch is completely compressed together.
14. Turn the clutch assembly over and inspect the dimensions as shown in Fig. 25. This dimension must be 1/16 + 1/16.
15. Install six capscrews and tighten. Remove the studs and install the other three capscrews. Line up holes in bolt heads and lock with wire.

L. INSTALLATION OF STEERING CLUTCHES: First Type Clutch Shaft (Prior to "HD 14" #1156)

1. With the 9 capscrews in clutch assembly facing upward, place steering brake drum down over clutch assembly. Place in compartment with 9 capscrews toward final drive pinion.
2. Install clutch shaft in bevel gear hub from opposite side, push through until end of shaft is flush with the bevel gear hub.
3. Lift clutch assembly up to align the hole in the clutch hub with the clutch shaft. Push shaft through clutch hub taking care not to damage the threads on the end of the clutch shaft. The clutch will have to be rotated to get the splines on the shaft to line up with the splines in steering clutch hub.
4. Push shaft through until the other clutch can be lowered into the other compartment. Align hole and shaft, push shaft in clutch.
5. Install thick washer, lock washer (with cup part out), and nut, on one end of shaft. Run nut until there are 3 threads sticking through the nut and lock in two places.
6. Install washer, lockwasher, and nut on the other end. Draw nut up tight and lock in two places.

NOTE: When installing new style clutch shaft, place steering clutch assembly in compartment and slide clutch shaft through final drive case and through splines in clutch hub. Then install spacer nut assembly over splines of shaft, sliding shaft through bevel gear hub. Install adjustable spacer nut assembly on opposite side, push shaft thru splines in other clutch assembly. Install the split lock rings in place on end of shaft and slide clutches out so rings fit into counterbore of clutch hub. Adjust the spacer nuts on both sides equally so the dimension between clutch throwout plate and bevel gear case is equal on both sides.

When installing lock-capscrews in spacer nuts be sure they fit into one of the splines on clutch shaft. Lock screws securely with lockwire.

M. INSTALLATION OF FINAL DRIVE PINIONS:

1. Install keys in driven hub. Peen over

end of keyways so the keys will not fall out. Place hub in clutch compartment with keys, one at the top and one at the bottom.

2. Install puller adapter, puller screw and ram on pinion for installing. Push pinion through inner bearing, so that keyways coincide with keys in hub, far enough to place felt seal over end of shaft, making sure that lugs on oil slinger and felt seal are lined up with keyways.
3. Lift hub and align keys with keyways in the pinion shaft, push driven hub on and hold firmly by placing a bar on each side of the hub and prying it toward the pinion.
4. Drive the pinion in with the ram until the lock washer and nut can be started on the shaft. (Place lockwasher on pinion shaft with lug on washer toward the nut).
5. Drive pinion in with ram, holding against driven hub with bars and tighten nut at intervals until shaft and nut are tight. Place a 4 foot extension on wrench, use the ram and tighten the nut securely. Lock on two faces of nut. Remove pinion puller parts from pinion.
6. Install bearing on outer end of shaft with SHIELDED SIDE TOWARD GEAR. Install cover and gasket over end of pinion shaft.
   NOTE: There should be .025" clearance between end cap and bearing. Obtain this clearance by adding gaskets between cap and housing.
7. Install sprocket guard and axle end cap.

N. INSTALLATION OF BRAKES:

1. From this point reverse procedure covered in Topic 107-A.
2. Before replacing steering clutch covers adjust the clutches. Refer to Topic 56, for adjustments.
3. Before replacing brake hole covers adjust brakes as outlined in Topic 59.

O. FIELD INSTALLATION OF STEERING CLUTCH — ADJUSTABLE SCREWS:

1. Remove ventilating covers from top of steering clutch cover by taking out four capscrews.
2. Remove jam nuts from grease tubes which come up through steering clutch covers.
3. Loosen steering clutch adjusting screw lock bolts at top of throwout fork and back adjusting screw out far enough to pass by thrust pin. Unhook throwout fork spring from dowel in top of case.
4. Hold rod connector and loosen jam nut; back screw out of connector.
5. Remove steering clutch covers.
6. Inspect the shifter plate to see how far it extends out of the steering clutch hub. The shifter plate must extend out 1/8" or more beyond the face of the clutch hub before the adjusting screws can be installed. If this distance is less than 1/8" and the adjusting screws are installed, the clutch springs will be compressed so it will be impossible to fully release the clutch thus causing excessive heating and wear.
7. The tractor will have to be moved ahead or back as the adjusting screws are installed in order to bring the holes in the hub flange toward the top.
8. Install parts removed.

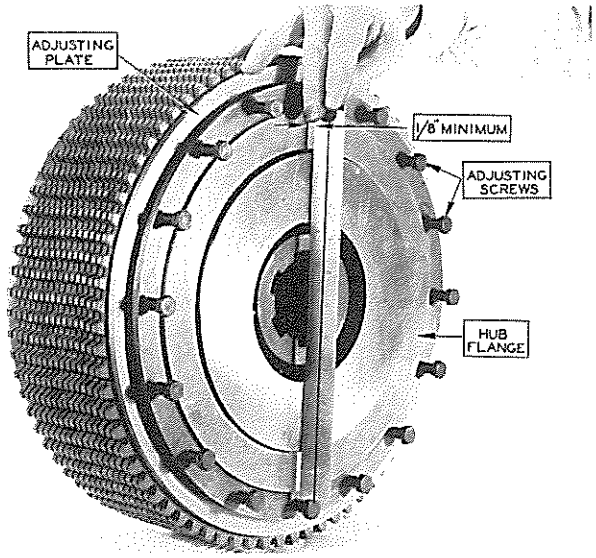

FIG. 26

CAUTION: When installing the adjusting screws be sure to run them in all the way, tighten securely, and wire in place in pairs.

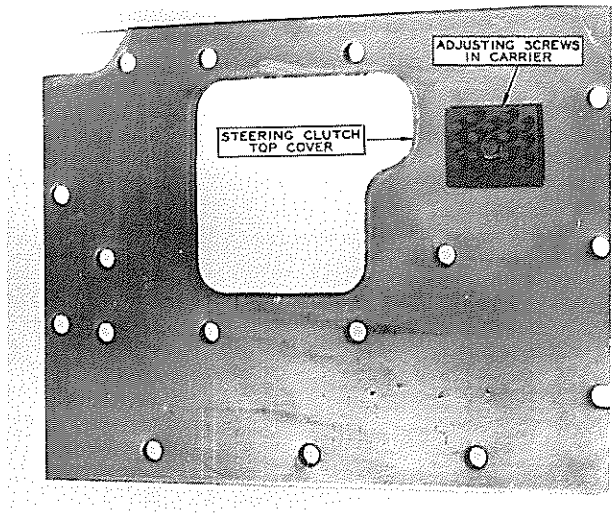

FIG. 27

9. For steering clutch adjustment refer to Topic 56.
   NOTE: The adjusting screws for field installation are located on the bottom side of the steering clutch top cover. They are held in place by a plate and a capscrew as shown on Fig. 27.

108 --"HD 7" Final Drives

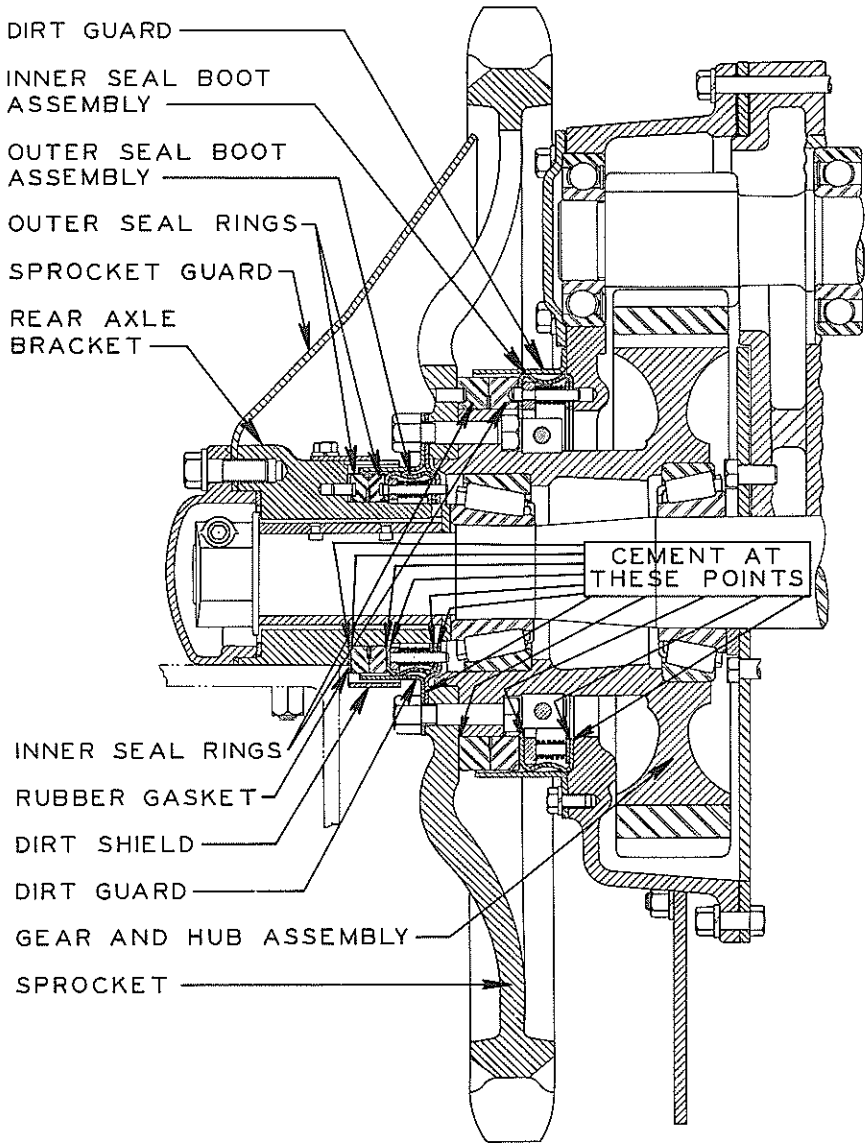

FIG. 1

A. REMOVAL OF OUTER SEALS:

1. Uncouple track. Refer to Topic 119-A.
2. Drain final drive.
3. Remove sprocket guards and end covers. Fig. 1.
4. Wash all dirt from around sprockets and
5. Remove rear axle bracket bolts.

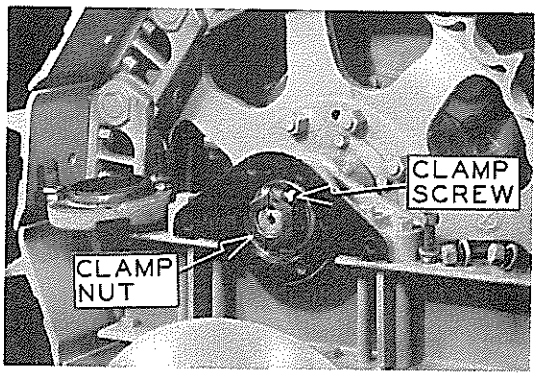

FIG. 2

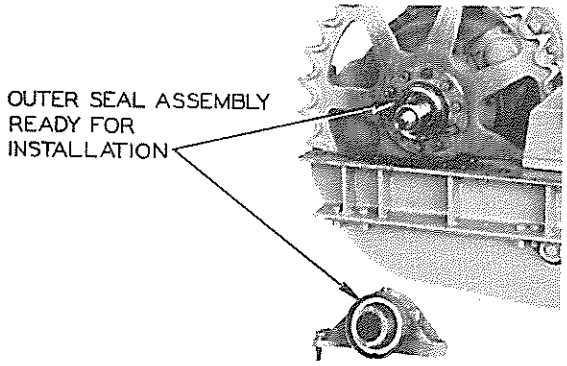

FIG. 3

6. Jack up rear end of tractor so rear axle bracket will clear truck frame.
7. Remove sprocket bolt nuts.
8. Remove the entire rear axle bracket and seal assembly from the axle as a complete unit.

B. REMOVAL OF OUTER SEAL ASSEMBLY FROM AXLE BRACKET:

1. Remove drive plate and outer guard. The outer washer springs, outer seal boot, and outer follower assembly can now be removed.
2. Remove the dirt guard welded assembly.
3. Remove the 2 seal rings.

C. INSTALLATION OF OUTER SEAL:

1. Install both seal rings on axle bracket and make sure they turn freely. If not, dress the brackets down.
2. Cement the gasket in place on the rear axle bracket. Fig. 1.

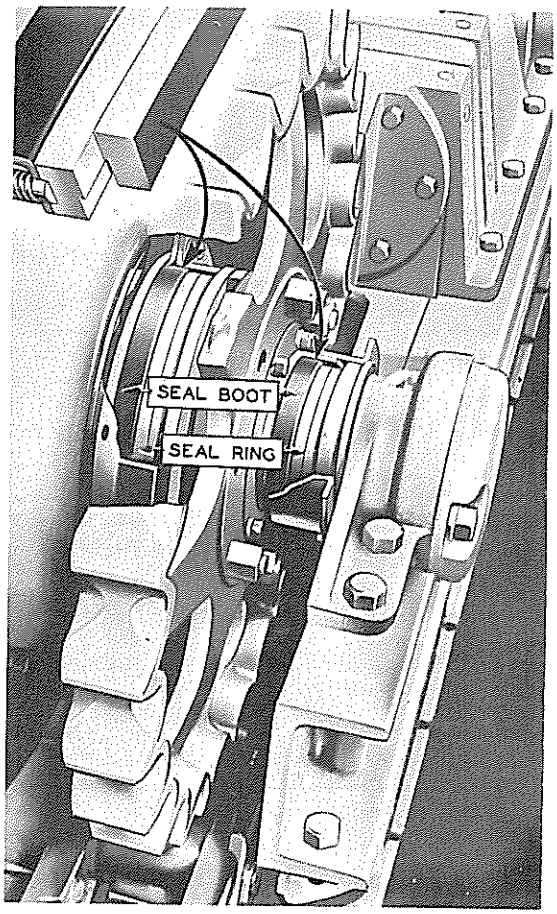

FIG. 4

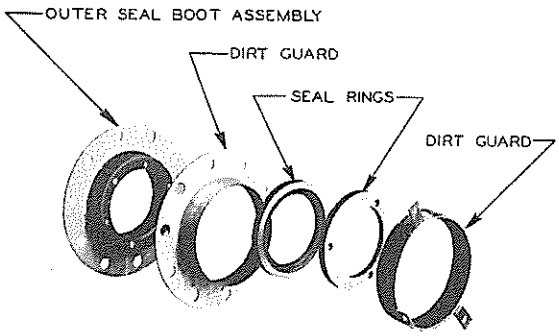

FIG. 5

3. Install the first seal ring cementing it to the above gasket. (Be sure the dowels in the axle bracket fit into the hole in the seal ring).
   NOTE: New rings must be installed in pairs. Never install a new ring with one that is badly pitted or scored.
4. Oil the sealing surfaces and install the second seal ring. IN ORDER TO OBTAIN GOOD SERVICE FROM THE SEALS, THE BEARING SURFACES MUST BE KEPT CLEAN.
5. Install the dirt guard.
6. Install outer guard on the axle bracket.
7. Install outer seal boot on the spring fol-

lower assembly. In order to hold the boot in place, cement it to the follower. Make sure the boot fits over the dowel pins. A new boot may be warped or out of shape; if so, dip it in boiling water and it will resume the correct shape.

8. Install the gasket on the sprocket bolts. Install the spring follower and boot assembly and cement one seal ring in place on the assembly. Be sure the dowels on the boot assembly fit into the dowel holes in the seal ring.
9. Slide the rear axle bracket with the seal ring and dirt shield in place onto the rear axle. Install the rear axle nut and adjust bearings on rear axle shaft. Start clamp nut and tighten up on clamp bolt in nut to prevent spreading. Draw nut up until it contacts the washer; tighten clamp bolt again. Now tighten axle nut using a 4 foot extension on wrench. When nut is tightened, back off about 1/6th turn to give bearing clearance. Now tighten clamp bolt in nut using an extension on Allen head wrench.
10. Reverse procedure followed in Topic 108-A. Reassemble parts removed. Refill the final drive cases, see Lubrication. Topic 1.

D. REMOVAL OF INNER SEAL ASSEMBLY:

1. Drain final drive.
2. Remove rear axle bracket and outer seal assembly as described in Topic 108-A-B.
3. Remove 3 capscrews in each stabilizer spring seat.
4. Jack up rear end of tractor high enough to remove sprocket. (By releasing the steering clutch, the sprocket will rotate around the release housing rear cover). See Fig. 6.

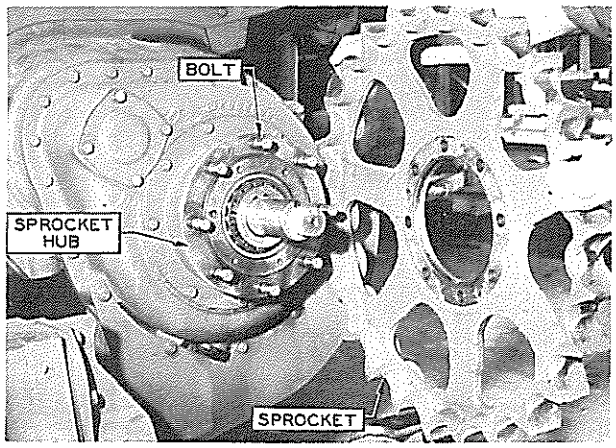

FIG. 6

5. Remove sprocket. By using three 5/8", eleven thread N.C. capscrews, 3" long, threaded full length, the sprocket can be forced off. Otherwise, it may be removed with a sledge hammer, by driving on the outer edge of sprocket.
6. Remove inner seal rings.
7. Remove inner seal drive assembly.
8. Remove dirt guard.

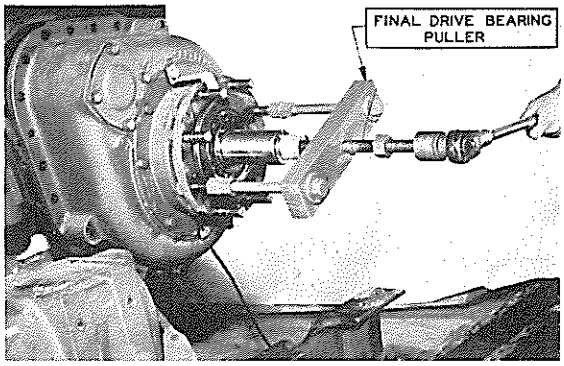

FIG. 7

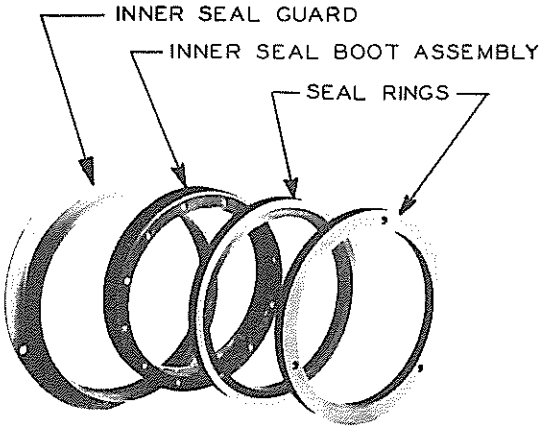

FIG. 8

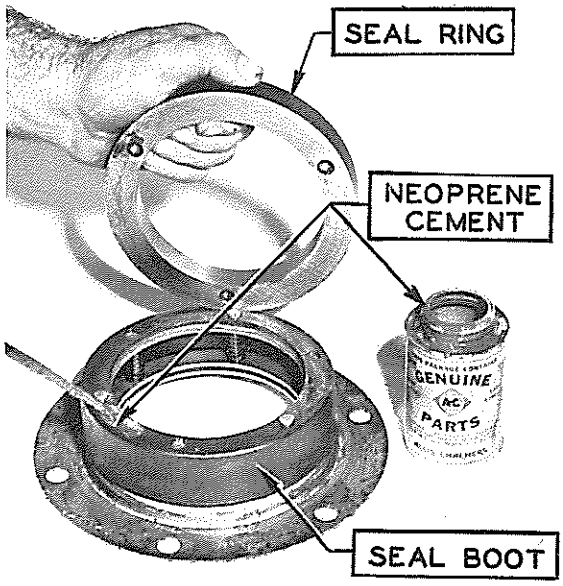

FIG. 9

E. INSTALLATION OF INNER SEAL ASSEMBLY:

1. Install seal rings on hub to make sure they turn freely.
2. Cement boot to inner seal drive assembly. Make sure boot fits properly over the dowel pins.
3. Install the inner seat boot and drive assembly using cement on the counter bore of the final drive case. Be sure dowel pins fit properly in dowel holes of the final drive case.
4. Install the first seal ring. Be sure that the dowels line up.
5. Install the second seal ring using motor oil on the sealing surfaces of both rings. Keep both bearing surfaces clean.
6. Replace the gasket on the sprocket side.
7. Install the dirt guard.
8. Install the sprocket and be careful that sprocket dowels fit properly in the dowel holes of the seal rings. Be sure the inner seal ring is properly located on the hub and does not catch on the corner of the hub. Test this by pushing gently on the outer seal ring and noting the spring action of the seal assembly.
9. Reassemble the remainder of the tractor.

F. REMOVAL OF FINAL DRIVE GEAR AND HUB ASSEMBLY:

1. Remove outer and inner seal assemblies as described in Topic 108-B-D.
2. Remove capscrews and bolts holding gear case to transmission case and remove gear case.
3. Remove gear and hub assembly.

G. INSTALLATION OF FINAL DRIVE ASSEMBLY:

1. Reverse procedure covered in Topic 108-A.

109 --"HD 10" Final Drives

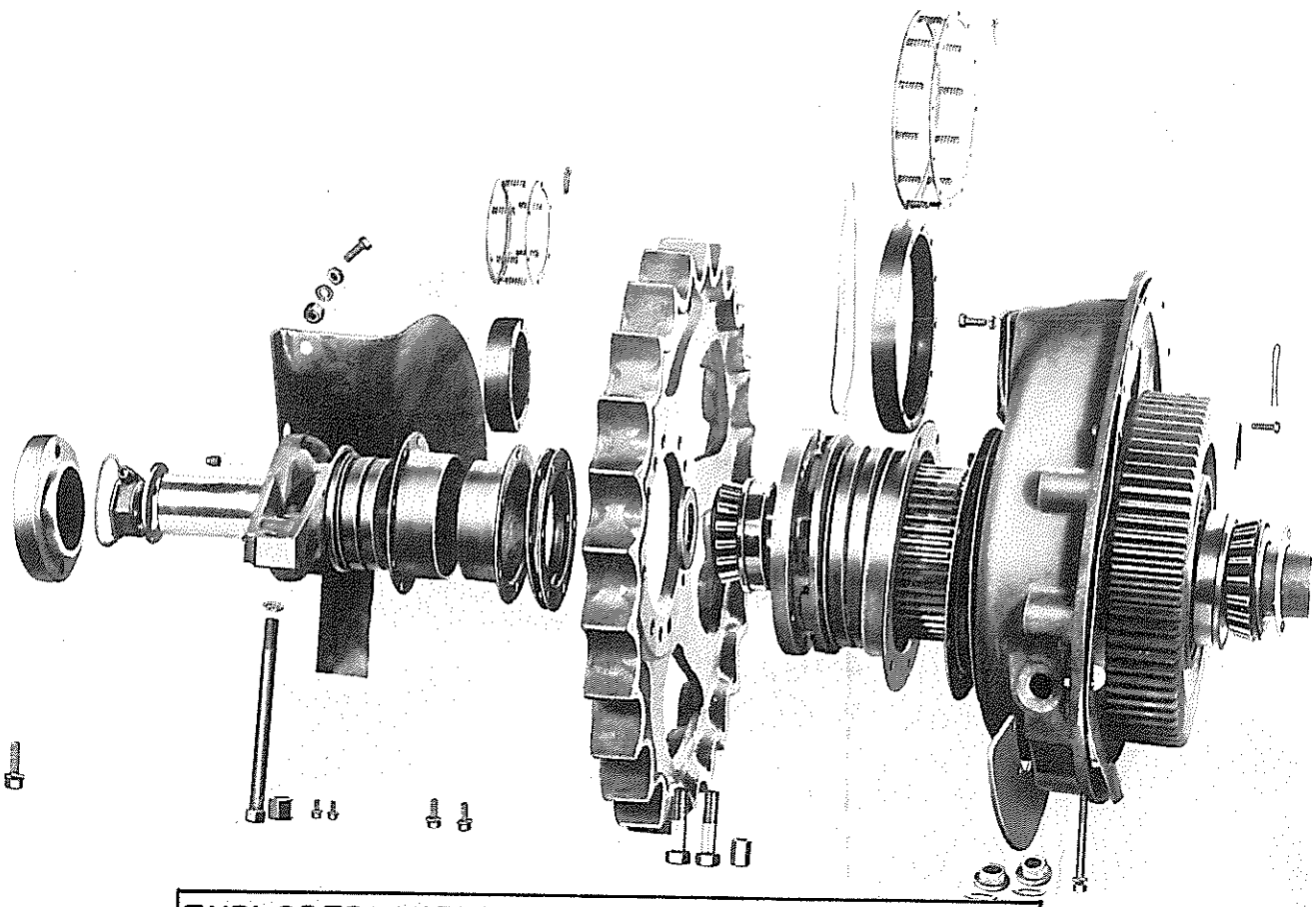

EXPLODED VIEW OF FINAL DRIVE ASSEMBLY

FIG. 1

A. REMOVAL OF OUTER FINAL DRIVE SEAL

1. Uncouple the track by driving out master pin. Uncouple track. See Topic 119-A.
2. Drain final drive.

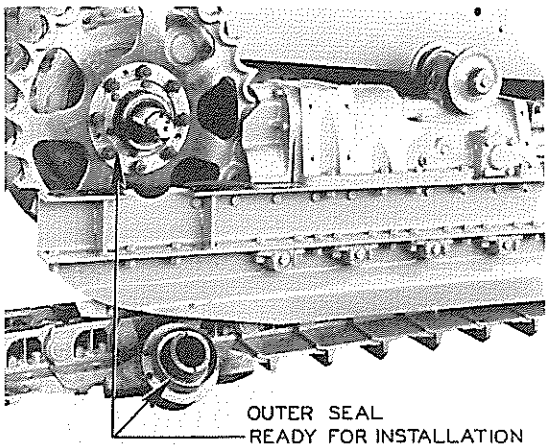

FIG. 2

3. Remove sprocket guard and end cover.
4. Remove rear axle bracket bolts.
5. Jack up rear end of tractor so rear axle bracket will clear truck frame.
6. Remove rear axle clamp nut.
7. Remove rear axle bracket and seal.
8. Remove seal parts from axle bracket and hub assembly.

B. INSTALLATION OF OUTER FINAL DRIVE SEAL:

1. Install both seal rings on axle bracket and make sure they turn freely. If not, dress bracket down until they turn freely.
2. Cement gasket to rear axle bracket. Fig. 3.
3. Cement seal ring to gasket on the bracket. Be sure the dowel in the axle bracket fits in the hole in seal ring. NOTE: New rings must be installed in pairs. Never install a new seal ring with a worn seal.

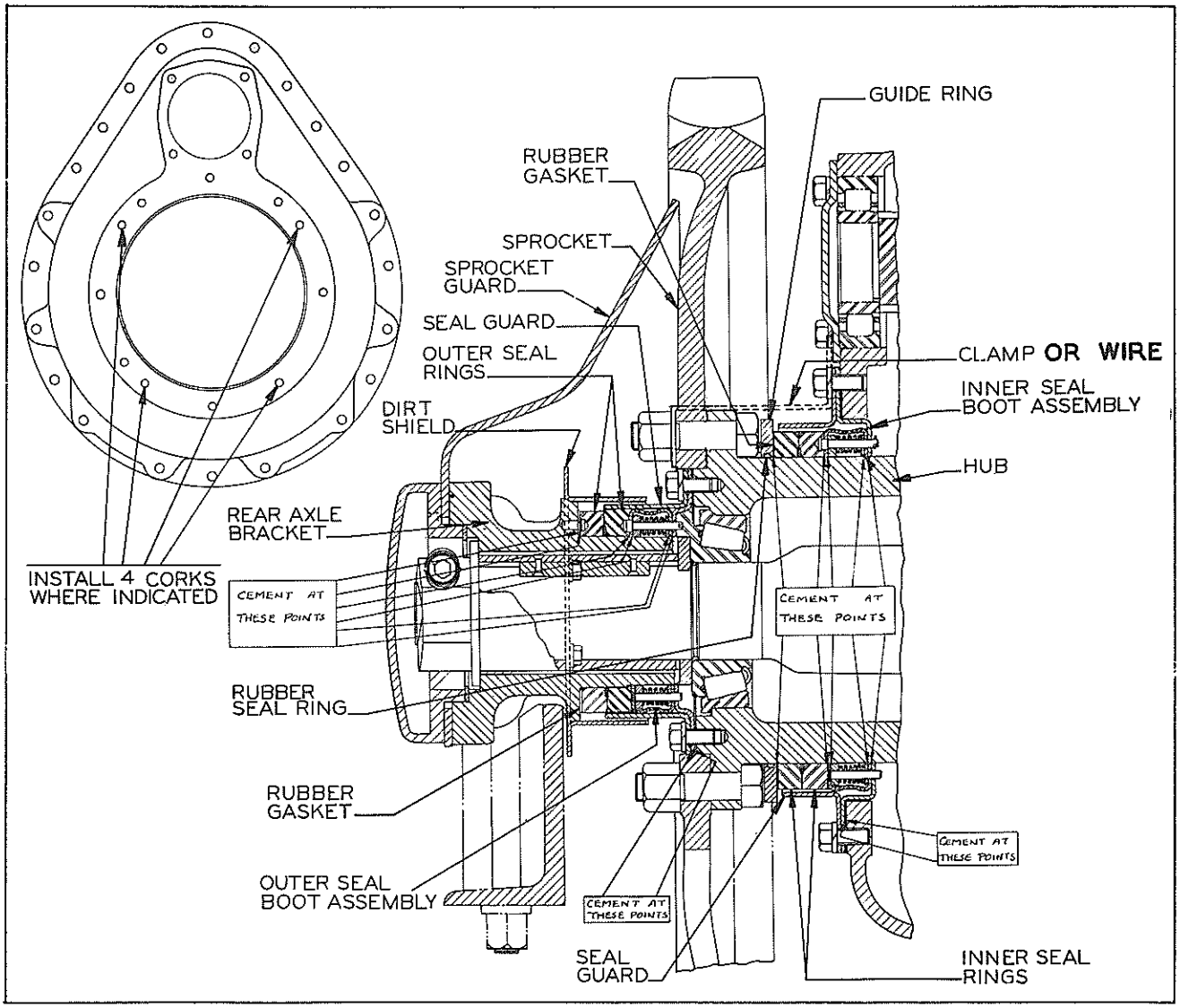

FIG. 3

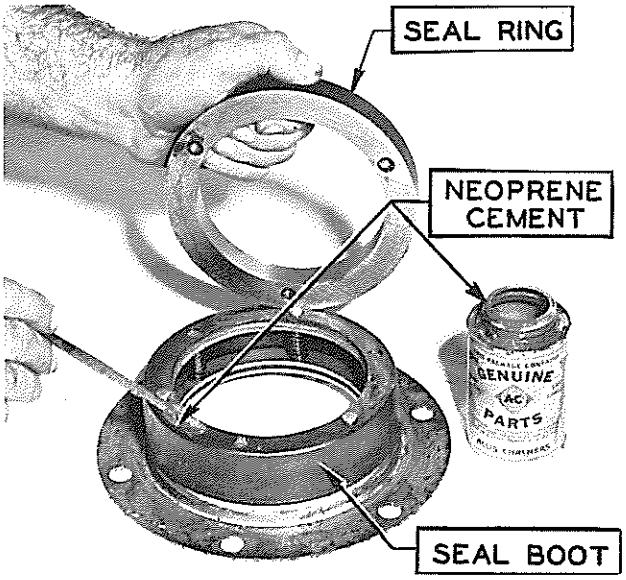

FIG. 4

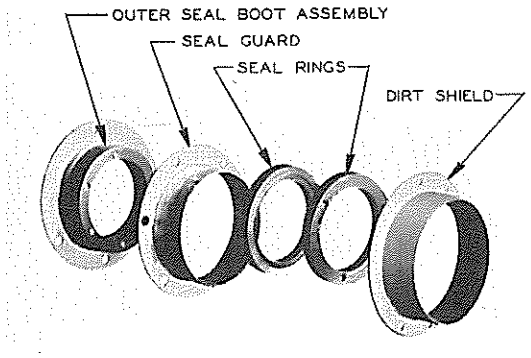

FIG. 5

4. Lay the outer guard on axle bracket.
5. Install outer seal boot on the spring follower assembly. Cement the boot to follower and make sure the boot fits over dowel pins.
   NOTE: If boot is warped, place in boiling water and it will resume its original shape.
6. Install boot assembly and spring follower on drive plate and insert cotter pins.
7. Cement seal ring to boot assembly.
8. Clean seal ring and lubricate seal surface.
9. Install seal ring and boot assembly on the hub with inner guard.
10. Slide the rear axle bracket with the seal ring and dirt shield in place on the rear axle. Install the rear axle nut and adjust bearings.
    NOTE: To adjust, start clamp nut and tighten clamp bolt in nut to prevent spreading. Draw nut up till it contacts the washer, tighten clamp bolt in nut again. Now tighten axle nut using a 4 foot extension on wrench. When nut is tightened, back it off 1/6 turn to give bearing clearance. Now tighten clamp bolt using an extension on Allen head wrench. See Fig. 13.
11. To reassemble other parts removed, reverse procedure in Topic 109-A.

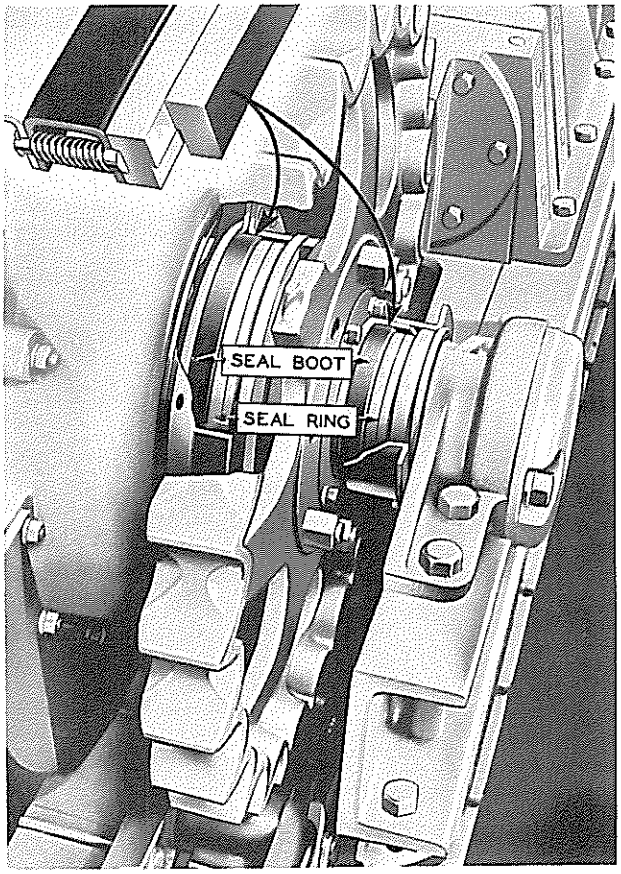

FIG. 6

C. REMOVAL OF FINAL DRIVE AND INNER SEAL ASSEMBLY:

1. Remove rear axle bracket and outer seal assembly as described in Topic 109-A.
2. Remove 3 capscrews in each stabilizer spring seat.
3. Jack up rear of tractor until both sprockets clear truck frame, as shown. (By releasing the steering clutches the sprockets will rotate around the release housing rear cover).
   NOTE: The sprockets may be removed now or they can be left on. The whole final drive assembly can be removed as a complete unit. If sprocket is removed, mark sprocket and hub so the sprockets can be replaced in their original position.
4. Remove bolts and capscrews holding final drive case to transmission case.
5. Remove outer tapered bearing on sprocket shaft. Remove outside pinion bearing cover.
6. Remove final drive assembly. Use care when removing so that teeth on large gear do not damage inner race of outer pinion bearing.

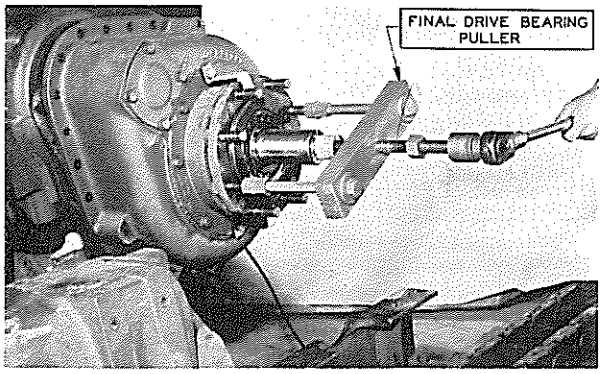

FIG. 7

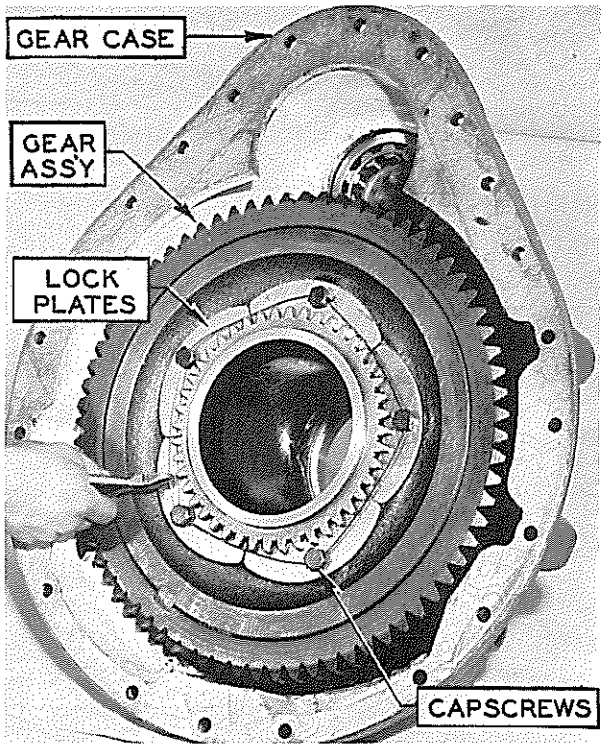

FIG. 8

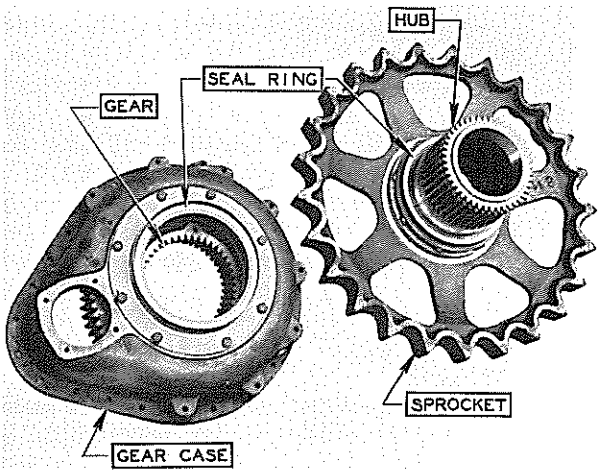

FIG. 9

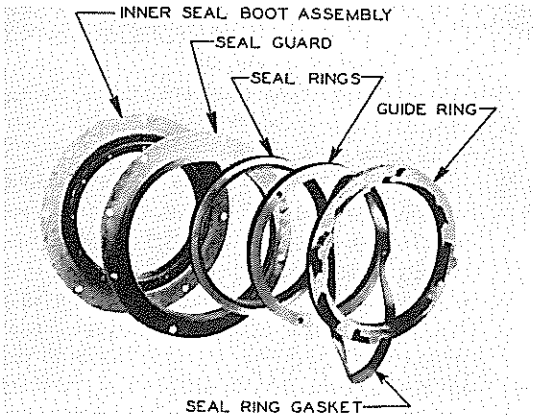

FIG. 10

7. Remove gear locks and lay complete assembly on blocks with gear side down. Lift gear hub out.
8. Remove seal ring and boot assembly from hub and case.

D. INSTALLATION OF FINAL DRIVE AND INNER SEAL ASSEMBLY:

NOTE: Be very careful and clean throughout the assembling of the seals. If any dirt is allowed to get into the seal during assembling, it will not operate properly and will only have to be removed and thoroughly cleaned again. Wash all parts clean and be sure they are thoroughly dry before using. Handle the new seal rings as little as possible taking care that the sealing surfaces are not scuffed or scored.

1. If sprocket has been removed, install on hub. If it is necessary to drive sprocket on, be careful and drive on only until the nuts can be started. Then draw the sprocket on evenly with nuts.
2. Set up assembly with the outer hub face down on wooden blocks.
3. Install the packing ring in the guide ring, then install guide ring on the hub, so that the dogs on the guide ring lock with the sprocket bolts.
   Caution: Be very careful not to "cock" the guide ring as the sharp edges of the spline will damage the packing ring.
4. Install both seal rings on the hub and make sure they turn freely. Remove the rings if they do not turn freely and dress the hub down with a file or emery cloth.
5. With Neoprene cement attach the inner ner seal ring gasket to the guide ring. Remove all excess cement from the adjacent parts. See Fig. 3 for surfaces to be cemented.
6. Cement the seal ring to the gasket.
   Caution: Be careful and make certain that the dowel pins on the guide ring have fully entered the holes in the seal ring.

7. Place the final drive case on wooden blocks so that the outside of the case is up. Install 4 corks in holes as shown on sketch and trim corks flush with case.
8. Install the gasket cementing it to the final drive case.
9. Assemble the spring boot assembly which consists of one inner follower assembly, one drive ring, nine springs, one washer, one inner seal boot, and 3 cotter pins. Cement the surfaces as shown in Fig. 3. Make sure the dowel holes are properly lined up. If the boot is warped or distorted, dip it in boiling water and it will resume its correct shape.
10. Install the spring boot assembly on the final drive case cementing the drive ring to the gasket.
11. Install the inner guard on the final drive case.
12. Cement the seal ring to the spring boot assembly, making sure the dowel pins are properly located.
13. Clean the sealing surfaces of both sealing rings thoroughly and lubricate with clean oil.
14. Install the hub on the final drive case.
15. Use clamps as shown on sketch and draw the hub down even until the guide ring is snug against the inner guard. This method keeps the dowels in place and prevents any dirt from lodging between the sealing surfaces of the seal ring while the final drive assembly is being installed.

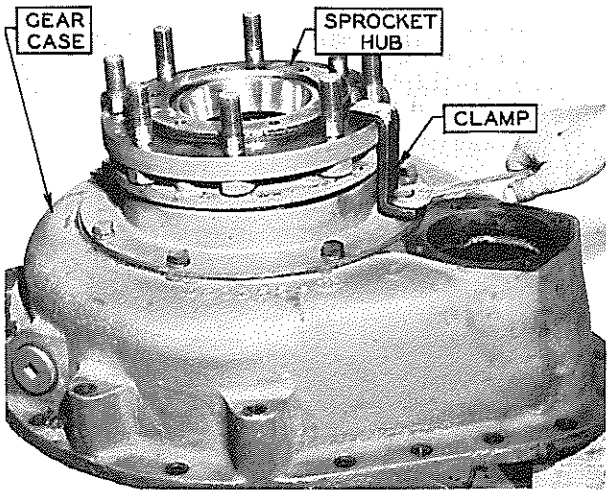

FIG. 11

If clamps are not available, wire can be used. Fasten wire around the sprocket bolts on outer side, then over to inner seal guard capscrews which will have to be backed out far enough to allow two or three wraps of wire around the head; place wire as described in Fig. 3 at three or four equally spaced intervals around the hub, twist the wire so as to hold all parts firmly in place.

16. Turn the assembly up so that the outer face of the hub is downward on the wooden blocks and install the gear on the hub.
17. Install the final drive case gasket and then install the final drive assembly on the tractor. Install the tapered bearing,

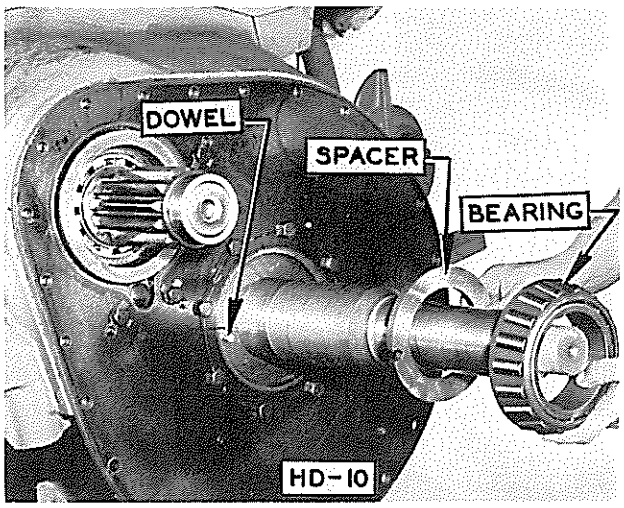

FIG. 12

inner washer, spacer assembly, outer washer and clamp nut. Tighten the clamp nut until the bearings are tight.

18. Install all capscrews and bolts in final drive case to the transmission case, but do not tighten.
19. Install outer pinion bearing, cover and gasket; now the bolts and capscrews can be tightened in final drive case.
20. Remove clamps or wire used holding the seal assembly together.
21. Remove final drive clamp nut and outer thrust washer. The outer final drive bearing will be tight enough on the shaft, to hold the inner seal assembly in place, while the outer seal is being installed.
22. Install outer seal assembly as described in Topic 109-B. Now the sprocket can be pulled in place by running the nuts on evenly. Remove the clamp nut and thrust washer. To finish installation reverse removal procedure. Topic 109-A.

NOTE: Item 1 describes installation of the final drive sprocket on the hub before installing the assembly on the tractor. Otherwise the sprocket can be left off until after the gear and hub, case and seal assembly are installed on the tractor.

Item 15 describes use of clamps to hold the seal assembly in its proper place. The same method can be used in assembling without sprocket, but clamps must be shorter and fastened over the

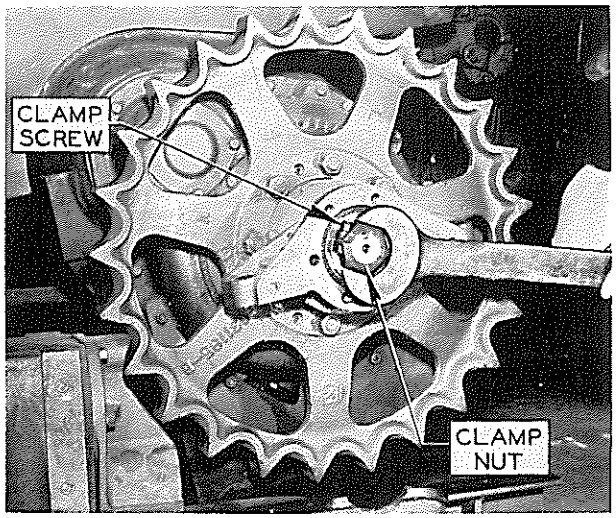

FIG. 13

edge of hub flange.
After the assembly is ready, install on tractor as described in item 17-18-19 and 20.
Install sprocket on hub far enough to start all nuts on bolts, (the sprocket may have to be driven on far enough to start the nuts.)
It may be necessary in making this change to remove capscrew No. 12567 which holds sprocket and cut down the heads to 5/8" height in order to accommodate guide ring assembly No. 043295.

E. FINAL DRIVE SEAL: (Second Type, "HD 10")
HD 10 tractors prior to serial number 702 used the first type final drive seal arrangement. HD 10 serial number 702 and above used the improved second type. The second type can be installed on tractors prior to HD-10 No. 702, by ordering Part No. 044403 final drive seal change-over group.
CAUTION: This should result in a few thousands inch clearance between the guide ring assembly and the heads of the capscrews and allow the legs of the guide ring assembly to contact the sprocket hub as intended. However, on some guide rings assemblies it will be necessary to grind away a little material to produce the desired clearance between the heads of the capscrews and guide rings.

110 -- "HD 14" Final Drive Assembly

A. REMOVAL OF AXLE BRACKET AND PACKING:

1. Locate master pin in track. Master pin extends beyond boss on the rail about 1/4"; other pins are flush with bosses.
2. Run tractor until master pin is in forward center of front idler.
3. Hold "bucking bar" on inside of track rail near pin. With a sledge and drift pin drive master pin from outside toward inside. Completely remove master pin.
4. Run tractor backward until the track is all on the ground.

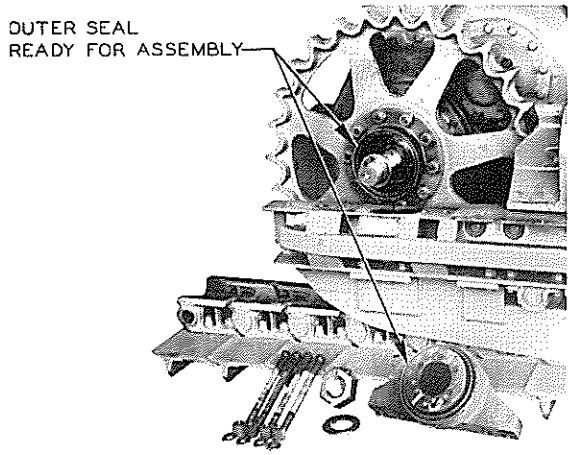

FIG. 1

5. Remove end cap and sprocket guard. Drain oil from final drive gear case.
6. Remove the 4 bolts holding axle brackets to truck roller frame.
7. Remove the equalizer spring "U" bolts.
8. Remove capscrews from spring seat on track frame.
9. Jack up rear end of tractor until sprocket clears the truck frame.
10. Loosen clamp screw in rear axle nut with an Allen head wrench.
11. Remove rear axle shaft nut.
12. Remove rear axle shaft bracket which also includes outer packing assembly.

B. REMOVAL OF FINAL DRIVE SPROCKET:

1. Remove axle bracket. Refer to Topic 110-A.
2. Replace bearing spacer and rear axle shaft nut to hold assembly in place until sprocket is removed.
3. Straighten nut locks on sprocket hub and remove the nuts. The sprocket can now be removed.
   a. On tractors having 7/8" holes tapped in the sprockets, three 7/8" x 6" Standard Cap Screws can be used as a puller to remove the sprocket.
   b. On sprockets without the tapped holes, a bar and a sledge hammer are necessary. Place the bar behind the front side of the sprocket against the final drive case and drive the sprock-

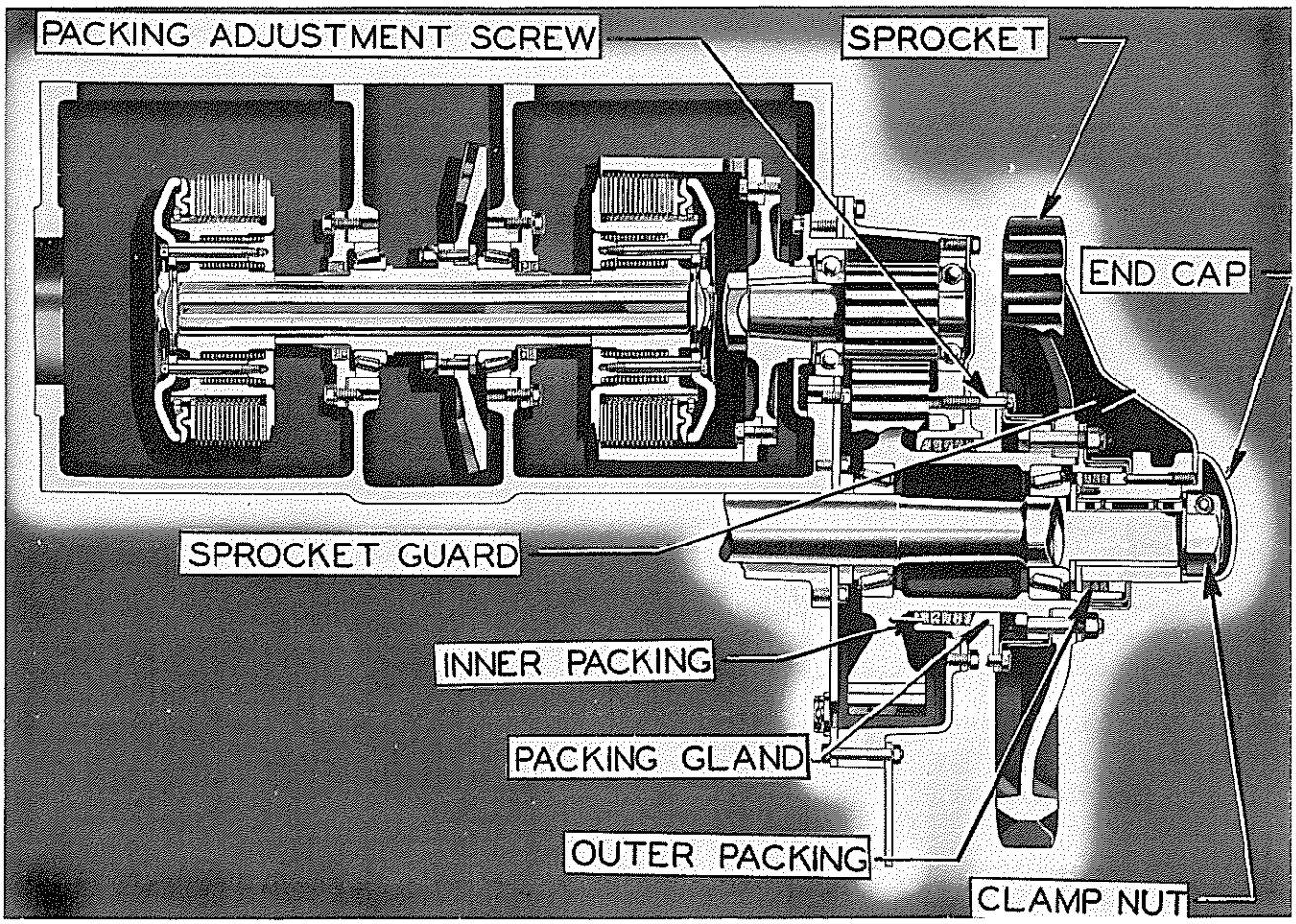

FIG. 2

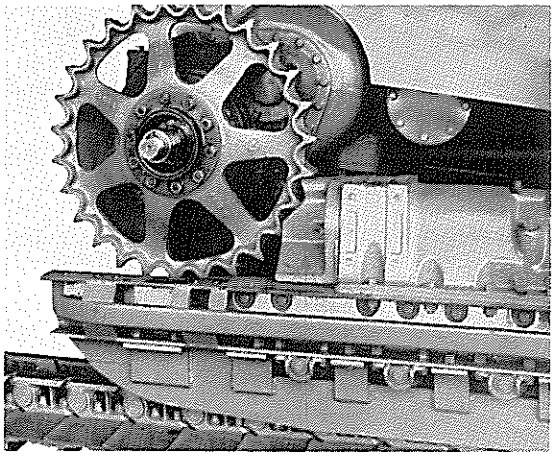

FIG. 3

et off with the sledge hammer from the rear of tractor.

C. REMOVAL OF INNER FINAL DRIVE PACKING:

1. Remove axle bracket. Refer to Topic 110-A.
2. Remove drive sprocket. Refer to Topic 110-B.
3. Cut the wire and remove 8 capscrews. Now the hub guard and packing gland can be removed.
4. By using a hook the 5 pieces of packing can be removed.
5. Remove the 8 capscrews holding inside packing gland to the final drive case. (This gland is in two halves). Mark this gland with a chisel to be sure it is put back in same position.

D. REMOVAL OF FINAL DRIVE GEAR AND CASE:

1. Remove axle bracket. Refer to Topic 110-A
2. Remove drive sprocket. Refer to Topic 110-B.
3. Remove inner packing. Refer to Topic 110-C.
4. Remove the 5 capscrews from pinion cover. Now the cover can be removed.
5. Now remove 17 capscrews and bolts holding gear case to side plate. Pry gear case out over pinion bearing and remove same.
6. Remove pinion bearing with puller.
7. Remove rear axle clamp nut, spacer and bearing. Now gear and hub can be removed.

E. INSPECTION OF FINAL DRIVE ASSEMBLY PARTS:

1. Wash all parts clean. Inspect carefully for wear, chipped, or cracked parts and install new parts if necessary.
2. Install new packings.
3. Inspect roller bearings on rear axle for shaft wear.
4. Inspect pinion and final drive gear teeth for wear. If these teeth are chipped or cracked a new gear or pinion must be installed. It is never advisable to install a new pinion gear with a worn mating part.
5. Inspect inner pinion bearing for wear. If worn badly it will cause excessive wear on steering clutch disc teeth and a jerky brake pedal.

F. INSTALLATION OF FINAL DRIVE GEAR AND CASE:

1. Install new gasket on side plate.
2. Install inside axle shaft bearing.
3. Install final drive gear and hub assembly.
4. Install outside axle shaft bearing. washer, spacer assembly and clamp nut. Draw nut tight enough to hold assembly in alignment.
5. Install gear case. Start all capscrews and bolts, but do not tighten them.
6. Install pinion bearing. Now tighten all capscrews and bolts around gear case.

G. INSTALLATION OF INNER FINAL DRIVE PACKINGS:

1. Install the inside packing gland. (Two halves). Make sure to get this back in the position it was in when removed.
2. Install 5 new pieces of packing. Be sure to get packing all the way in. Be sure the ends are together but not overlapping. Stagger the ends of packings, placing joint of first packing at the top, joint of second packing at front etc., until all packings are installed.
3. Install outer halves of packing gland and screw in the 8 capscrews. Do not draw these packings too tight. This packing should be adjusted so a small amount of oil will seep past the packing rings. This is necessary to lubricate the packing rings and prevent them from wearing rapidly and scoring hubs. Lock all screws with wire after adjustment is made.

H. INSTALLATION OF FINAL DRIVE SPROCKET:

1. Install outer gland guard over sprocket bolts. Install sprocket. Make sure it is started on the bolts straight so as not to damage threads. Draw nuts even all around and when tight, fasten locks.

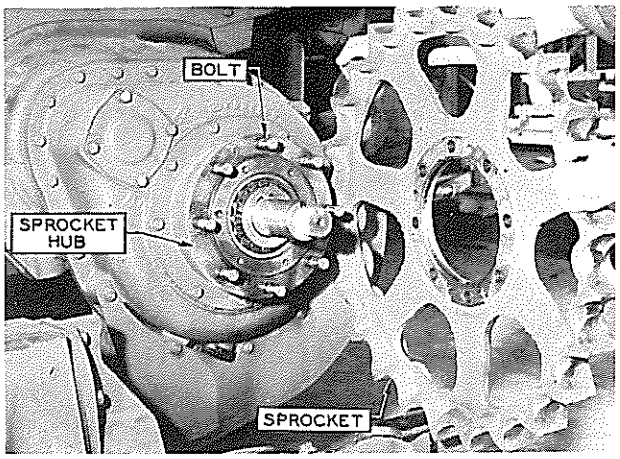

FIG. 4

I. INSTALLATION OF REAR AXLE BRACKET:

1. Remove clamp nut from rear axle shaft and slide rear axle bracket in place over spacer. Install washer and clamp nut.

J. FINAL DRIVE BEARING ADJUSTMENT:

1. Adjust bearings on rear axle shaft. Start nut and tighten up on clamp to prevent nut from spreading. Draw nut up until it contacts washer, then re-tighten clamp. Now tighten axle nut using a 4 foot extension on wrench, when nut is tight, back off about 1/6 turn to give bearing clearance. Now tighten clamp bolt in nut using an extension on the Allen head wrench.
2. Proper adjustment of these bearings will provide correct mesh for final drive gears, prevent cracked and chipped teeth and undue bearing wear.
3. Now remove block and let tractor down using a drift to guide axle brackets in place; bolt the axle bracket down TIGHT. Install sprocket guard and end cap. Track can now be installed. Refer to Topic 119-C.

111 -- Final Drive Sprocket Shaft

A. REMOVAL OF SPROCKET SHAFT:

1. Remove the final drive. Refer to "Final Drive Removal and Installation," Topics 108-109 and 110.
2. Remove the capscrews holding the side plate to transmission case.
   NOTE: Care should be taken during assembly, to replace these capscrews in the same hole from which they were removed, as they are of different lengths. Now the side plate can be removed.
3. Loosen jam nut and remove set screw in rear of transmission case.
   NOTE: The set screw is in the back of the case on the "HD 14" and "HD 10"; it is underneath the tractor on the "HD 7".
4. Place puller on shaft as shown in Fig. 2 and 3 and remove shaft.
5. When using puller on "HD 7" shaft, it is necessary to cut 2 notches in the end of shaft to allow fingers to enter full depth. The fingers are placed in the split head and the head holder and then slipped over the head.

B. INSTALLATION OF FINAL DRIVE SPROCKET SHAFT:

1. Measure distance from outer end of old shaft to case, then mark the same distance on new shaft so as not to drive in too far.
2. Install the nut on the shaft flush with the threads. Tighten clamp bolt tight. Secure a block of hardwood and a heavy sledge and drive the shaft in place.
3. After shaft is in place, drill a hole about ½" deep for seat of the set screw.
   NOTE: Dry ice may be used to shrink shaft if it is available. This makes installation easier.

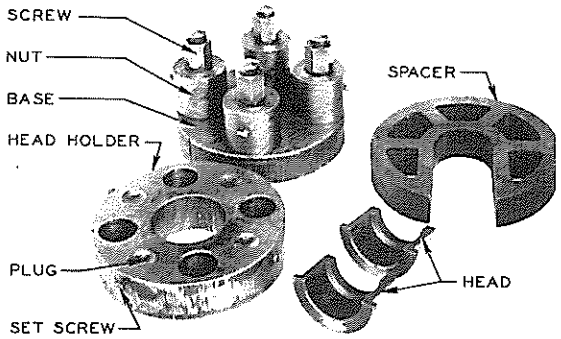

FIG. 1

PULLER INSTALLED ON HD-14 SPROCKET SHAFT.

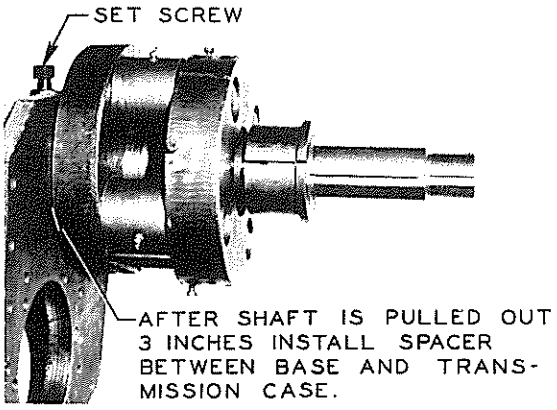

FIG. 2

INSTALLING PULLER ON HD-14 SPROCKET SHAFT.

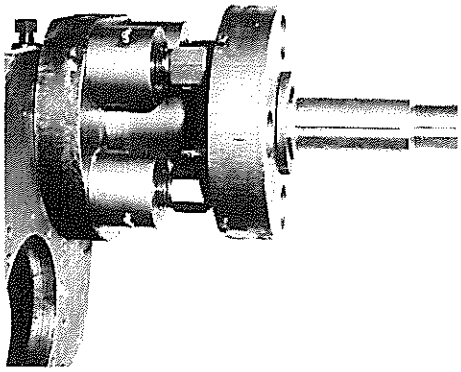

FIG. 3

112 -- "HD 7" Stabilizer Assembly

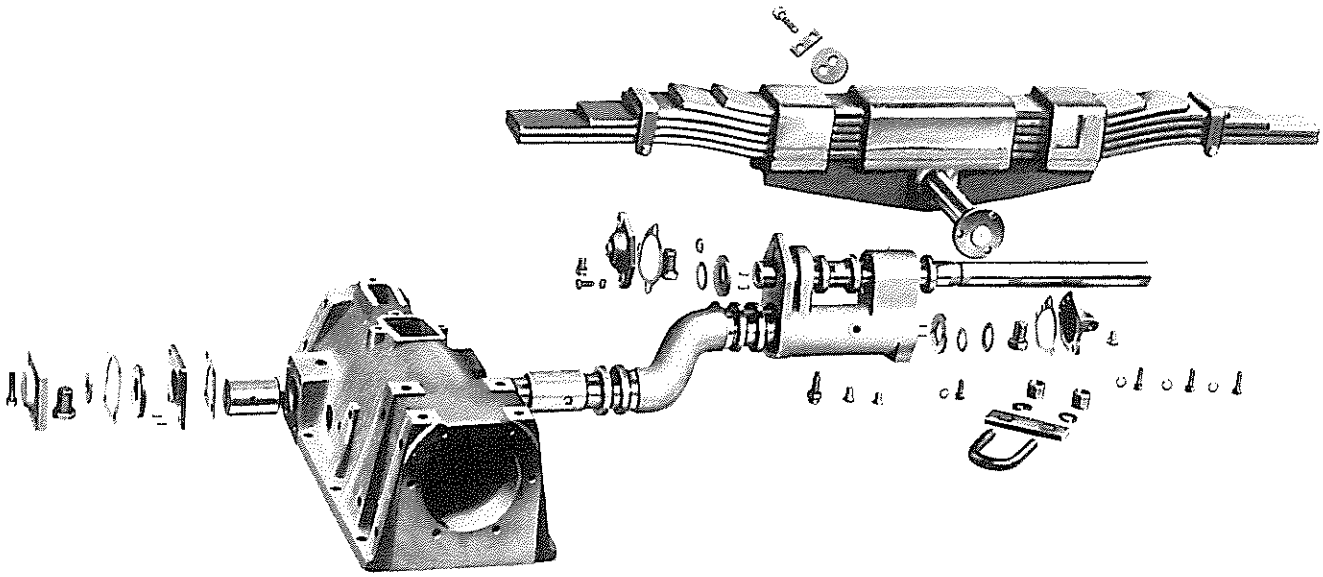

EXPLODED VIEW OF STABILIZER CRANK AND SPRING ASSEMBLY

FIG. 1

A. REMOVAL OF STABILIZER ASSEMBLY:

1. Remove capscrews from stabilizer link shaft caps on both ends of stabilizer link shaft.
2. Straighten lock washer on end of link shaft and remove capscrew, lock washer and thrust washer.
3. Straighten lock plate on dog point screw and remove screw.
4. Remove the spring seats. Jack up the front end of the tractor to limit of spring; this will allow the link shaft to be driven out over the track release housing.

   NOTE: On HD 7 tractor #1279 and above it will also be necessary to follow the steps listed below.

   a. Remove master clutch cover plate and cover plates on top of spacer.
   b. Pull the steering clutch levers back and fasten them in the released position or remove one of the clevise pins from each control rod.
   c. Reach down through clutch compartment inspection hole in transmission case and loosen the U. bolt nut nearest the inspection hole. (These U bolts are directly under the clutch shaft.) Fit wrench on the nut and use a pry bar down through the rear inspection hole against the wrench to break the nut loose.
   d. Now that the rear nut is loosened, the front nut will be easier to loosen. Back both nuts off a few turns to allow the U. bolt to drop down out of the groove in the link shaft.

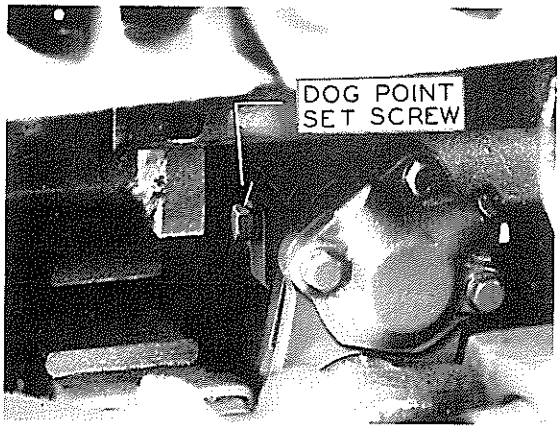

FIG. 2

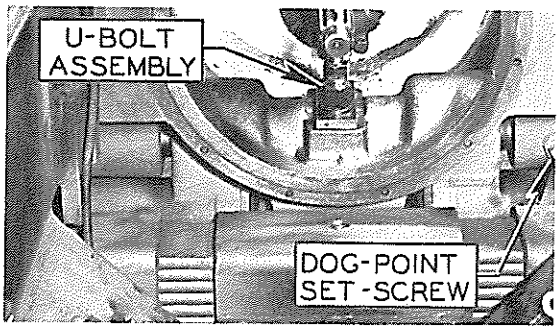

FIG. 3

5. Place large capscrews back in end of link shaft and drive on head of screw.

Shaft will pass through so link will drop.

6. Remove capscrews from end caps on stabilizer crank assembly. Straighten lockwashers and remove studs and thrust washers. Stabilizer crank assembly can now be pushed in through track release housing under tractor where it can be taken out.
7. Remove end caps on inner end of stabilizer crank assembly; remove capscrew and washers from shaft and remove link from crank assembly.

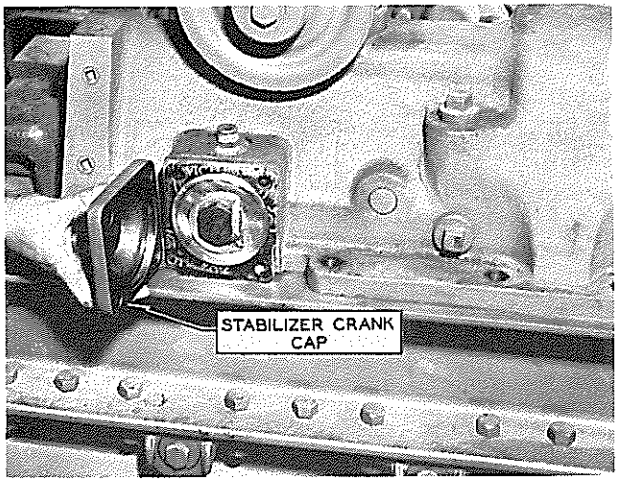

FIG. 4

B. INSPECTION OF PARTS:

1. Wash all parts thoroughly.
2. Inspect all parts for abnormal wear, such as bushings, crank-bores, end caps and collars on stabilizer cranks.
3. If these seem to be worn excessively new parts should be installed. It is a good policy to install new seals and gaskets throughout the entire unit, as these can be had at a nominal cost and insure against any lubrication leakage.
4. If collars on inner end of stabilizer cranks are worn, they will cause abnormal wear on end caps, destroy seals next to collar, (the correct thickness of this collar is ½") and cause excessive wear on axle shaft bearings and tracks.
5. See that all grease fittings are clean.
6. If link shaft appears to be worn to the extent that new bushings in linkage will not counteract wear, a new shaft should be installed.

C. INSTALLATION OF STABILIZER ASSEMBLY:

1. Install collar on stabilizer crank shaft if it has been removed with chamfer toward outer end of shaft, and drive up snug against the shoulder of crank.
2. Install new seals in stabilizer link in their proper order.

   NOTE: Install all SPRING LOADED SEALS WITH THE LIP OF SEAL AWAY FROM BUSHINGS, this is in order to let excessive lubricant escape without damaging the seal.
3. Now slide the stabilizer crank into the stabilizer link assembly and replace thrust washer, lock washer and bolt. Lock bolt by bending lock washer over bolt.
4. Proceed in the same manner with other stabilizer crank.
5. Install new gaskets and replace end caps.
6. Both crank assemblies are now ready to be installed in track release housings.
7. Install oil retainer on stabilizer crank with lip toward crank throw and push stabilizer crank assembly through housing from underneath tractor.
8. Repeat this operation on the other side.
9. After stabilizer cranks have been pushed into their respective places, place thrust washer gasket over dowel pins on outer end of shaft, then the thrust washer, lock washer and bolt. Tighten and securely lock the bolt. Install new cap gasket and replace end cap.
10. Repeat this operation for opposite side.
11. Oil retainers having been installed in the proper order on stabilizer link assembly and bolted in place, the linkage may now be lifted to its proper position. Stabilizer link shaft may now be installed taking great care not to injure oil seals.
12. When link shaft is through one link assembly the other side can be raised in position and shaft pushed through flush with other end of link assembly.
13. With the link shaft turned and centered properly install dog point set screw. Turn it all the way in against the bottom of the slot in the shaft and back out ½ turn. Tighten the lock nut to hold set screw in this position.
14. Install thrust washer, lock washer, capscrew and tighten. Bend lock washer over capscrew.
15. Install new gasket on end caps and attach.

    NOTE It will be necessary to follow the instructions listed below if tractor is HD 7 #1279 or above.

    a. After installing the link shaft with the stabilizer links and U Bolt in place, set the links so surface "B", the flat surface on the out end of the link, is 2½" from surface "A". Fig. 5.

    b. Assemble the thrust washer, lockwasher and bolt on one end of the link shaft. Lock this bolt tight. Tap the shaft endwise just enough to bring the thrust washer up against the link.

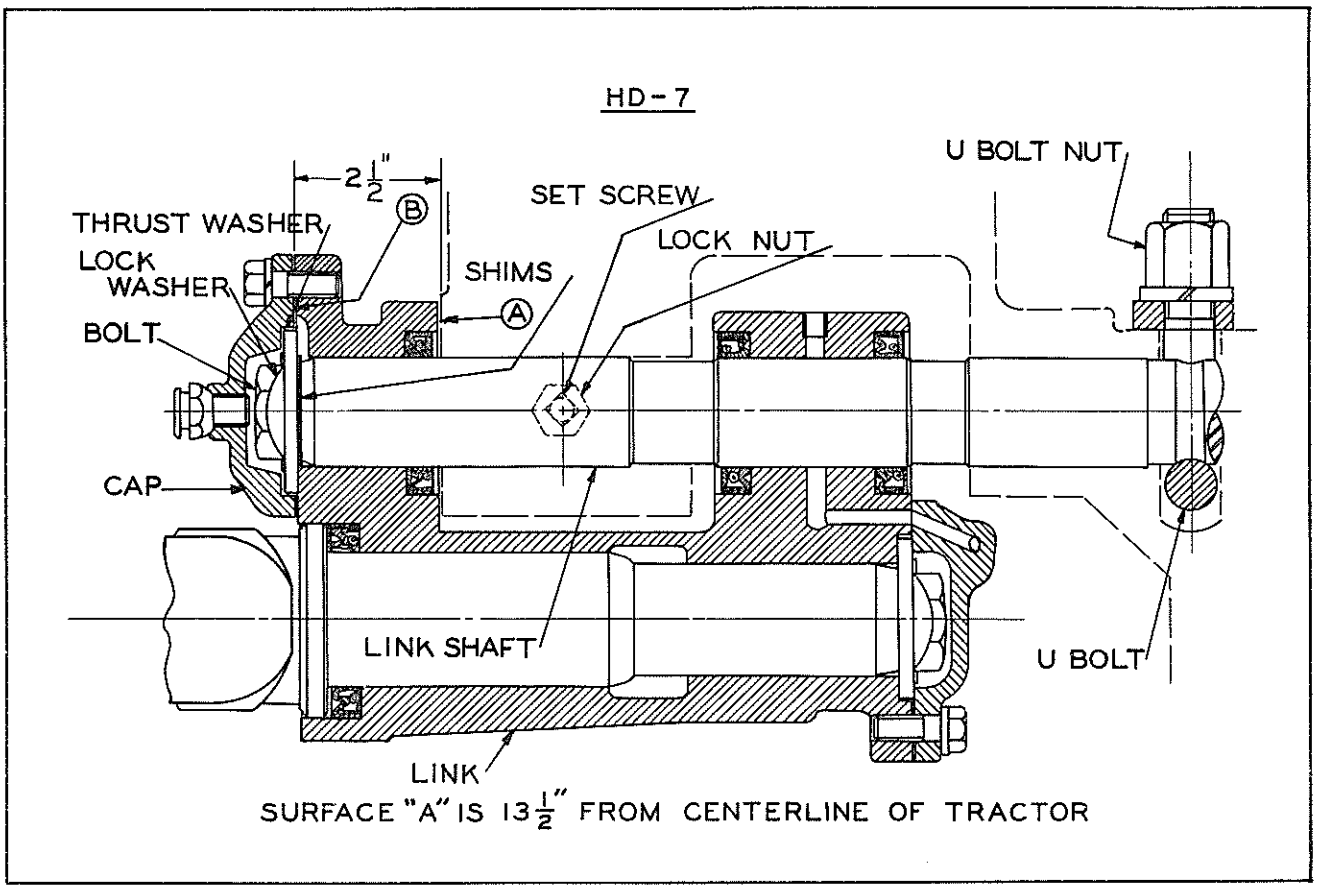

FIG. 5

c. Now with the two links in proper position with respect to the dimensions from surface "B" to "A" add shims (.010" and .030" furnished) to opposite end of link shaft until, the thrust washer is placed in position, the inside surface of the washer will be exactly flush with surface "B". CAUTION: On new type assemblies it may be necessary to add a .010" shim extra to provide clearance at surfaces "A" and "B" to prevent binding the links on the spacer.

d. With the proper total thickness of shims in position, install the thrust washer, lockwasher and bolt, tighten the bolt and lock it. Install the link shaft caps.

e. Securely tighten the U Bolt to hold the link shaft. Use a pry bar on end of the wrench to get the U bolt nuts tight.

f. As a further check, the surface "B" on one side must be 32" from the corresponding surface on the opposite side.

16. Thoroughly lubricate with a good grade of semi-fluid lubricant.

113--"HD 10" Stabilizer Assembly

A. REMOVAL OF STABILIZER ASSEMBLY:

1. Place jack under front of motor and raise as far as stabilizer spring will allow.
2. Remove 2 capscrews and remove track support roller.
3. Place block between front idler and truck frame to hold idler in place. Next loosen 2 clamp bolts holding track adjusting screw and loosen sufficiently to clear cross head.
4. Remove 4 capscrews on outside end of stabilizer crank cap and remove cap.
5. Straighten lock washer and remove 1¼" bolt from end of shaft, also remove lock washers and thrust washers.
6. Remove 10 capscrews holding track release housing to truck frame.
7. Track release housing may now be removed from truck frame.
8. Remove 4 capscrews from end of link shaft cap, on opposite side the track re-

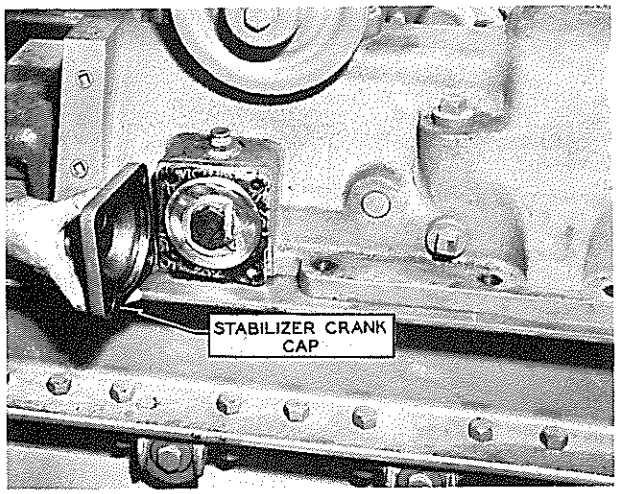

FIG. 1

lease housing was removed.

9. Straighten lockwasher and remove 1¼" bolt, lockwasher, outer thrust washers and gaskets.
10. Remove clamp bolts from both sides of motor casting where link shaft passes through.
11. Now remove the 4 capscrews from the link shaft cap on the other side. It is not necessary to remove bolt from this end of shaft. The shaft may be driven from opposite end by first installing 1¼" bolt in end of shaft to prevent damage to threads by driving.

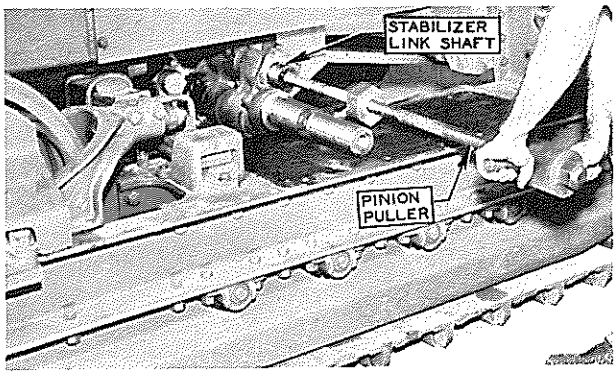

FIG. 2

12. The stabilizer crank and link assembly on side from which track release housing was removed, can now be taken from tractor and further disassembled. However, to free other crank assembly, it is necessary to remove the 4 capscrews from stabilizer crank end cap, straighten lockwasher and remove bolt, thrust washer and gasket. This stabilizer crank assembly may now be pushed through track release housing under tractor where it may be removed.
13. Remove 4 capscrews from inner end of stabilizer crank and link on each assembly.
14. Straighten lockwasher and remove bolt from end with lockwasher and thrust washer.
15. Link units may now be removed from crank.

B. INSPECTION OF PARTS:

1. Inspect all parts for wear or breakage.
2. If any parts show excessive wear or stabilizer shafts are worn or grooved, new parts should be installed.
3. Stabilizer link and crank assemblies on these machines are equipped with bronze bushings so they may be renewed when they become worn.
4. Good lubrication plays an important part in prolonging the life of this unit; worn parts will cause tracks to run out of alignment and abnormal wear will take place on axle shaft bearings and track assemblies.

C. INSTALLATION OF STABILIZER ASSEMBLY:

1. New oil retainers and gaskets should be installed at all points to prevent leakage; these can be installed at nominal cost.
2. Stabilizer cranks can now be placed in link assembly by first putting on collar, then oil seal with lip of seal towards crank throw.
3. Slide link assembly into place.
4. Install heavy thrust washer, lockwasher and 1¼" bolt and draw up tight.
5. Bend lockwasher over bolt head.
6. Install new cap gasket with cap and draw up firm.
7. Proceed with other crank assembly in the same manner.
8. Install oil seals in stabilizer link assembly. Install ALL SPRING LOADED RAWHIDE SEALS WITH THE LIP AWAY FROM BEARING.
9. Install collar and spring loaded seal on stabilizer crank and slide into track release housing left on truck frame.
10. Install new gasket, outer thrust washer, thrust washer, lockwasher and bolt. Tighten bolt firmly.
11. Lock bolt by bending lockwasher over bolt.
12. Install new gasket with end cap and tighten securely.
13. Install the other stabilizer crank into link using the same procedure as previously outlined.
14. Install equalizer link in place and start shaft through linkage.
    NOTE: Take great care not to disturb oil retainers as this is very important in prolonging the life of bushing and shaft.
15. Use the same procedure for the opposite side.
16. After link shaft has been put through bolt links, put on thrust washer, lockwasher and bolt. Tighten bolt.

17. Lock bolt by bending lockwasher over head of bolt.
18. Tighten clamp bolts on link shaft stabilizer bracket.
19. Install new gasket with end cap and tighten firmly.
20. Install oil seal and collar on stabilizer crank. Be sure seal has lip toward crank throw.
21. Install track release housing and bolt in place.
    NOTE: Be sure that seal enters seal counterbore evenly.
22. Install new gasket, outer thrust washer, thrust washer, lockwasher and bolt. Tighten bolt firmly.
23. Lock bolt by bending lockwasher over bolt head.
24. Install new gasket with end cap and fasten firmly to release housing.
25. Screw adjusting screw out of the release yoke far enough so block can be removed from between front idler and frame.
26. Install support roller.
27. Adjust track.

114 --"HD 14" Stabilizer Assembly

A. REMOVAL OF STABILIZER ASSEMBLY:

1. Place a jack under the front of the motor and raise weight of motor from stabilizer spring.
2. Remove 4 capscrews from link shaft end caps on both ends.
3. Straighten lockwasher on end bolt and remove bolt, lockwasher and thrust washer.
4. Remove dog point set screw that holds link shaft in place (located on left rear side of clutch spacer housing assembly).
5. Take out 6 capscrews holding spring seats to truck frame and slide seats from ends of springs.
6. Now raise front of tractor high enough so link shaft, when driven out, will clear track release housing. This shaft can be removed from either side of tractor.
   NOTE: If tractor is HD 14-1334 or above observe also the instructions listed below.
   a. Remove the batteries, front floor plate and top clutch hole cover in order to reach the nuts on U-bolt holding the link shaft in position. It will probably be necessary to use a pry bar against the end of the wrench to break the nuts loose as these nuts are very tight when assembled at the factory.
   b. After the nuts are loosened, they can be backed off by hand. A few rounds on each nut will let the U-bolt drop down enough so the shaft will slide through it.
7. Now install the capscrew in end of link shaft to prevent damage to threads and shaft may be driven out over track release housing.
8. The links will now drop down out of place.
9. Remove 4 capscrews from the outer end of the stabilizer crank end caps.
10. Straighten lockwashers and remove 4 capscrews from ends of cranks.
11. Cranks can now be pushed through to under side of tractor.
12. Assemblies may now be pulled from underneath tractor.
13. Remove 4 capscrews from inner end of stabilizer crank and link on each assembly.
14. Straighten lockwasher and remove bolt from end with lockwasher and thrust washer.
15. Link units may now be removed from cranks.

B. INSPECTION OF PARTS:

1. Wash all parts thoroughly.
2. Inspect all parts for abnormal wear, such as bushings, crank arbors, end caps and collars on stabilizer cranks.
3. If these appear to be worn excessively new ones should be installed. It is best to install new seals and gaskets throughout entire unit as these can be had at a nominal cost and insure against lubrication leakage.
4. If collars on inner end of stabilizer cranks are worn they will cause abnormal wear on outer end caps, destroy oil seals next to collar, (the correct thickness of this collar is 5/8"), and cause excessive wear on sprocket shaft bearings and tracks.
5. See that all grease fittings are clean.
6. If link shaft appears to be worn to the extent that new bushings in linkage will not counteract wear, new shaft should be installed.

C. INSTALLATION OF STABILIZER ASSEMBLY:

1. Install collar, if it has been removed from stabilizer crank, with chamfer of collar toward crank throw and drive up snug against inner end of crank.
2. Install new seals in stabilizer link assembly with feather edge facing outward.

3. Install spring loaded seal on stabilizer crank with lip toward crank throw. Now slide stabilizer crank into stabilizer link assembly and replace thrust washer, lockwasher and 1¼" bolt. Draw tight and bend lockwasher over bolt to lock. Be sure that seal enters seal counterbore evenly.
4. Proceed in same manner with other stabilizer crank. Install end caps and new gaskets.
5. Both crank assemblies are now ready to install in track release housings.
6. These can be slid in from beneath tractor.
   NOTE: Be sure that collars and seals are placed on stabilizer cranks, seals with lips toward crank throw.
7. This must be done on other side of tractor.
8. After stabilizer cranks have been pushed in place in the housings, install thrust washer over dowel pins, lock washer and bolt in end of shaft. Tighten and lock securely.
9. Install new gaskets and replace end caps.
   NOTE: Crank assembly must turn freely in housing. If any binding, install another cap gasket.
10. Install 5¼" O.D. felt seal on clutch spacer housing and lift stabilizer link assembly up in proper place.
11. Start stabilizer link shaft in link so that key seat is toward left side and keyway is in line with dog point set screw.
12. Now slide shaft through, taking care not to disturb seals or felts. It is best to have taper pin same size as shaft and push in ahead of shaft to help materially in keeping seals in place.
13. When shaft is through one link assembly, the other link can be raised to proper position and shaft pushed through flush with end of other link assembly.
    NOTE: If tractor is HD 14-1334 or above observe also the added instructions listed below:
    a. It will be necessary to locate the stabilizer links properly on the shaft. Proceed as follows. Make a center punch mark in exact center of head of bolt in the lower outer corner of the spacer 'C." The distance from point "C" to the outer end of the link surface "B" is 2 7/16".
       NOTE: As a check on the amount of wear on link, surface "A" is 1 9/16" from point "C" on a new assembly.
    b. Be sure the links are spaced as described in Fig. 1 and with the link shaft turned and centered properly install the dog point set screw. Turn it all the way in against the bottom of the slot in the shaft, then back out ½ turn and tighten the lock nut.

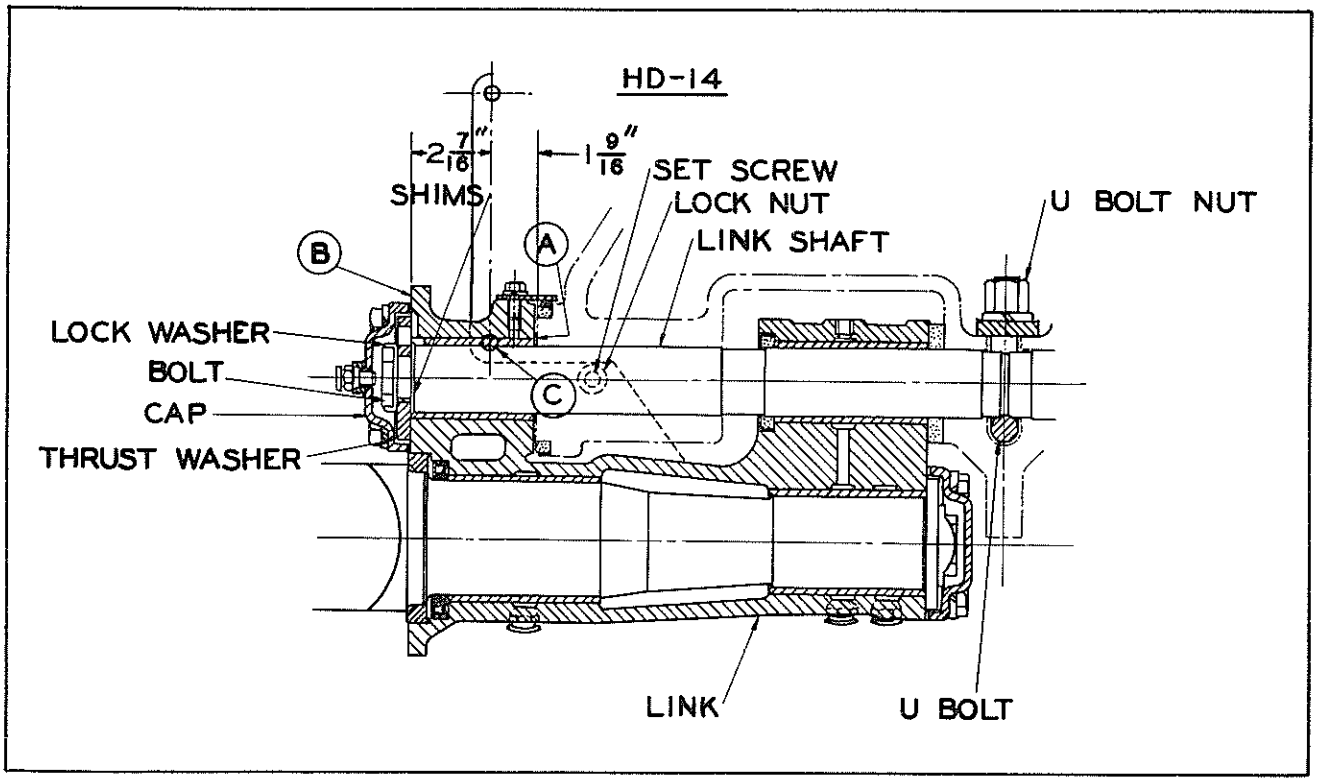

FIG. 1

c. Assemble the thrust washer, lockwasher on one end of the link shaft. Lock this bolt securely. Tap shaft endwise just enuogh to bring the thrust washer against the link.
d. With the two links in proper position with respect to dimension from surface "B" to point "C," as shown, add shims (.010″ and .030″ furnished) to opposite end of the link shaft until the thrust washer is placed in position, the inside surface of the washer will be exactly flush with surfaces "B." NOTE: On a new assembly it may be necessary to add a .010″ shim extra for clearance at surface "A" between the spacer and link to prevent binding.
e. Install the thrust washer, lockwasher and bolt. Lock bolt securely.
f. Securely tighten the U-bolt inside the spacer, using a pry bar on the end of the wrench.

14. Install end caps on link shaft assembly using new gaskets.

15. Thoroughly lubricate with a good pressure gun lubricant.

115 -- "HD 7", "HD 10", "HD 14" Stabilizer Spring

A. REMOVAL OF STABILIZER SPRING:

1. Remove front idler guards from one idler by removing 4 capscrews.
2. Block the front idler in position; place a block between the idler and truck frame.
3. Loosen clamp bolts and screw adjusting screw into yoke until screw clears cross head.
4. Remove yoke from idler bracket guide by removing 4 capscrews.
5. Remove spring seat.
6. Remove U-bolt.
7. Remove engine support bottom cover
8. Jack up front of tractor until weight is off spring pivot pin.
9. Remove 3 capscrews from rear end of pivot pin flange.

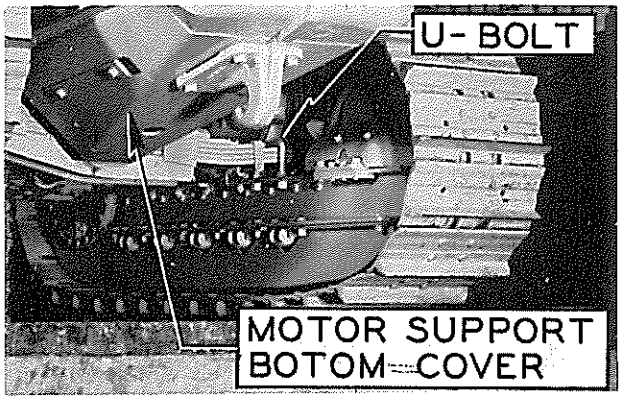

FIG. 1

NOTE: On the "HD 7" there is a capscrew and washer on the front end of the pin that has to be removed.
On the "HD 10," 2 capscrews have to be removed from the rear end of the pivot pin flange.

10. By using long drift pin and heavy hammer, drive pivot pin from front to rear.
11. Spring may now be removed through side from which yoke has been removed.

B. INSTALLATION OF STABILIZER SPRING:

1. Reverse removal procedure.

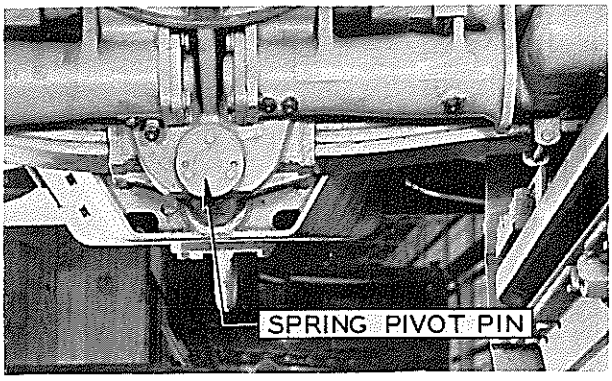

FIG. 2

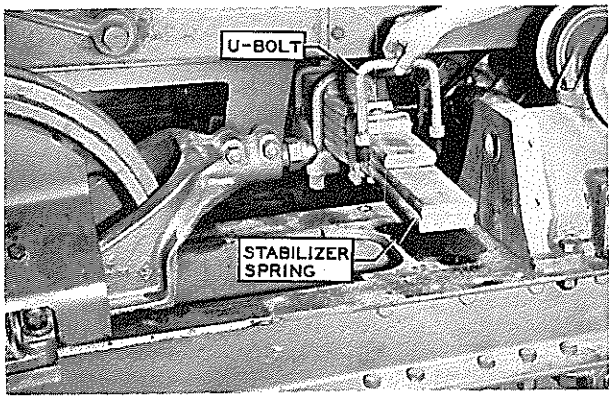

FIG. 3

116 -- "HD 7" Track Release Housing

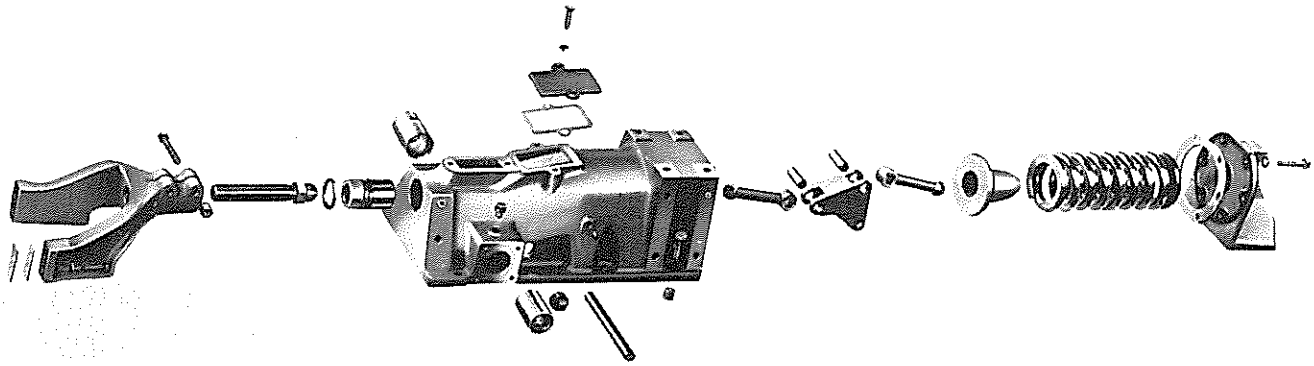

EXPLODED VIEW OF TRACK RELEASE ASSEMBLY

FIG. 1

A. REMOVAL OF HOUSING:

1. Loosen the 2 clamp bolts on the track release yoke.
2. Screw the track adjusting screw out to push the front idler ahead, then block between the idler and track frame. Unscrew adjusting screw until it is out of cross head.
3. Remove the outside stabilizer crank cap.
4. Straighten lock and remove the 1⅛" bolt with the thrust washer.
5. Remove the 10 bolts holding the track release housing to the frame. Now the housing can be pulled off the frame.

B. DISMANTLING OF TRACK RELEASE HOUSING:

1. Remove the top cover.
2. Drain oil and clean thoroughly.
3. Remove the 6 capscrews holding the rear cover. These capscrews must be loosened evenly so as to unload the big spring inside the spring release housing. Now the spring and plunger can be removed.
4. Remove the bell crank shaft by driving the shaft from the outside toward the inside. The bell crank can now be removed through the top of the release housing.
5. Remove the cross head by pushing it from the outside toward the inside.

C. INSPECTION OF PARTS:

Inspect all parts for wear and breakage. Install new parts where necessary.

D. INSTALLATION OF TRACK RELEASE HOUSING:

1. Reverse the above procedure.
2. Take block from front idler and adjust track.
3. Refill housing to level plug with four quarts of motor oil.

117 -- "HD 10" Track Release Housing

A. REMOVAL OF HOUSING:

1. Remove support roller.
2. Loosen the 2 clamp bolts on the track release yoke.
3. Screw the track adjusting screw out to push the front idler forward. Block the front idler and then back up the track adjusting screw far enough to release the cross head.
4. Remove the outside stabilizer crank cap.
5. Straighten lock and remove the 1⅛" bolt with the thrust washer.
6. Remove the 10 bolts holding the track release housing to the frame. Now the housing can be pulled off the frame.

B. DISMANTLE HOUSING:

1. Drain the oil and clean thoroughly.
2. Remove the 6 capscrews from the rear cover; unscrew evenly to unload track release spring. The rear cover, spring and spring plunger can be removed.
3. Drive the bell crank shaft from the outside toward the inside. The bell crank can be removed through the top of the housing.
   Make sure to mark the Bell Crank assembly before removing from housing, so that when installed, it will be placed back in its original place.
4. Remove the cross head and cross head

seal from the inside.

C. INSPECTION OF PARTS:

1. Inspect all parts for breakage and wear. Install new parts for all worn or broken parts.

D. INSTALLATION OF TRACK RELEASE HOUSING:

Reverse the above operation when installing. Refill housing to level plug with motor oil.

118 --"HD 14" Track Release Housing

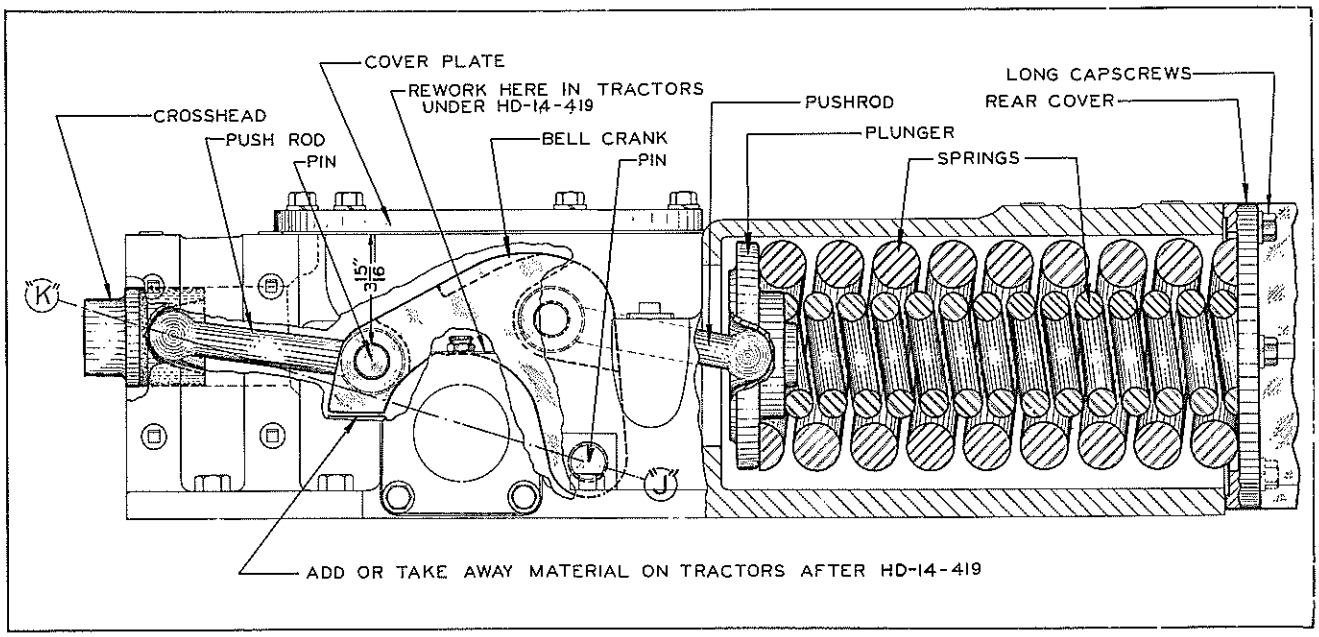

FIG. 1

A. REMOVAL OF HOUSING:

1. Remove track support roller.
2. Loosen the 2 clamp bolts on the track release yoke.
3. Screw the adjusting screw so as to push the front idler ahead, then block between the idler and truck frame. Unscrew adjusting screw until it is out of cross head.
4. Remove the 2 capscrews holding the track support roller to the track release housing and remove the roller.
5. Remove the outside stabilizer crank cap.
6. Straighten the lockwasher, remove the end bolt, lockwasher, outer thrust washer. Remove bolts holding the track release housing to the frame. The housing can now be removed.

B. DISMANTLE HOUSING:

1. Remove the top cover.
2. Drain oil and clean thoroughly.
3. Remove the 6 capscrews holding the rear cover in place. Unscrew the capscrews evenly to unload the track release springs. The rear cover, outer spring, inner spring and spring plunger can now be removed.
4. Drive bell crank shaft from outside toward inside. The bell crank can now be removed through the top of housing.
5. Remove cross head and cross head seal by pushing from outside of housing to inside.

C. INSPECTION OF PARTS:

1. Inspect all parts for breakage and wear. Install new parts where necessary. It will be necessary after installing bell crank assembly in housing to measure down from top of track release housing to top of pin.
2. This measurement should be 3 15/16". If this measurement is not found to be 3 15/16" it will be necessary to add or remove material from the wearing surface or bottom of bell crank. If it is found that material should be added to wearing surface, it may be done by welding.
   Prior to HD 14 Serial No. 419 in order to get proper height, material must be added or removed at point indicated on Fig. 1. After Tractor "HD 14" Serial No. 419, the wear is taken up by the bottom of bell crank.

D. INSTALLATION OF TRACK RELEASE HOUSING:

1. Reverse the dismantling procedure to assemble the track release housing and install it on the tractor.
2. Fill housing to level plug with motor oil.

119 -- "HD 7", "HD 10", "HD 14" Tracks

A. UNCOUPLE TRACK ASSEMBLY:

1. Locate master pin. This pin is longer than the others and extends approximatetly ¼" to ⅜" out from the boss on the side rails.
2. Run tractor forward or backward until this pin comes to forward center of front idler.

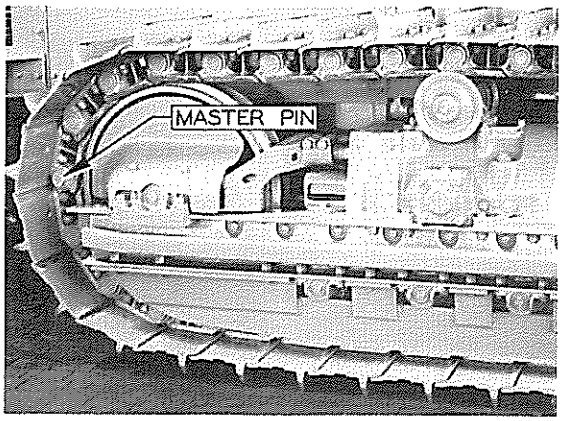

FIG. 1

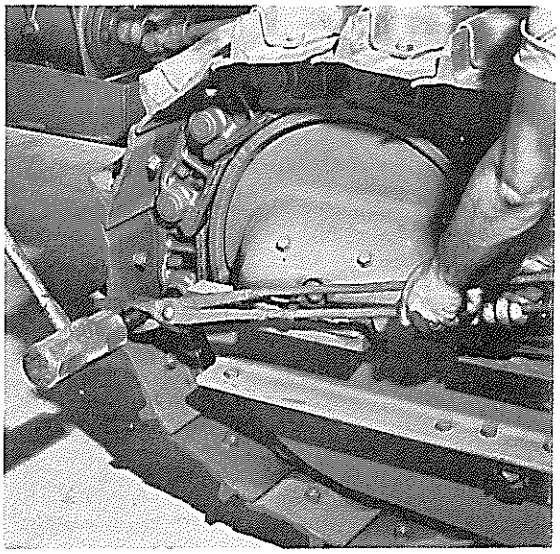

FIG. 2

3. Hold a bucking bar on inside rail close to pin.
4. Place driving pin against outside end of master pin and drive out with a sledge.
5. Back tractor up and track will roll over support roller and sprocket to ground in rear.

B. INSPECTION OF TRACKS:

When pins and bushings are worn to the extent that 3 inches of thread shows on adjusting screw, pins and bushings should be turned or install new parts where needed.

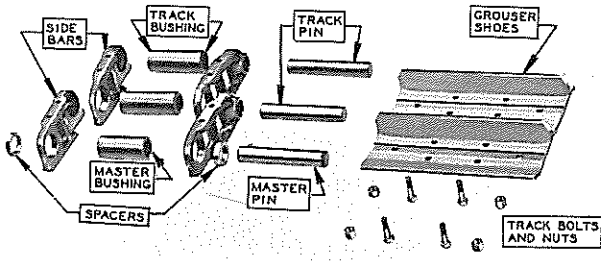

FIG. 3

C. INSTALL TRACKS:

1. Place track under truck frame with open end of track links to rear of tractor.
2. Place 8" blocks under front end of track on first shoe.

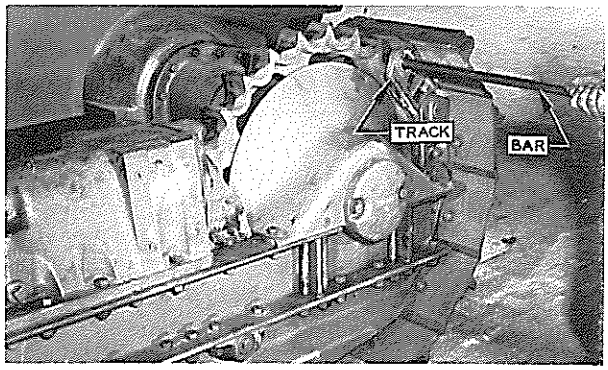

FIG. 4

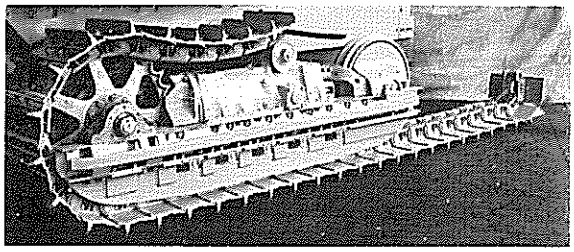

FIG. 5

3. Place bar through pin hole in rear end of track.
4. Now back tractor up until bar may be hooked over tooth in sprocket. Drive tractor forward holding bar firmly in place so track will roll up around sprocket.
5. Hold track up so it will go over top of support roller and front idler.
6. Remove bar allowing holes in end of track to line up.
7. Drive master pin into place.
8. Allow an equal amount of master pin to extend through on each side of rail.

D. ADJUST TRACKS:

To adjust track, loosen the lock bolts and turn the adjusting bolt until the tracks are

properly adjusted to the dimensions below. Turn the adjusting bolt clockwise or counter-clockwise forcing the release fork backward or forward and this loosens or tightens the tracks.

The track adjustment is correct when the track can be lifted 1½" to 2" above the track support roller.

E. CARE OF TRACKS

Intelligent and timely care of tracks will materially prolong their useful life. Probably because of the apparent simplicity of the track, the average owner and operator may give very little thought to the various factors which tend to affect its life.

The track is made up essentially of shoes, bolts, sidebars, pins and bushings.

There are several different kinds of shoes, each adapted to a particular application, but the most common or standard shoe is essentially a flat plate having one cleat or grouser which is rolled integral with the plate and extends its full length. At the time of purchase of the tractor, serious consideration should be given to the kind of work for which it is intended and the shoes chosen accordingly. While a wide shoe will give more traction on soft ground than a narrow one, it must be remembered that an extremely wide shoe imposes a very severe load on the entire track and roller assembly.

Of utmost importance is the matter of keeping the track bolts tight. It may be safely said that in practically every case, if the track bolts are tightened with a heavy duty socket wrench and extended handle two or three times during the first few days of its life, no trouble will be experienced from the loss of track bolts.

The rail links, or side bars, have only one wearing surface, that being the surface which contacts the track rollers, idler and support roller. Usually however, it becomes necessary to replace pins and bushings before the track rails wear out and it is a matter of judgment then as to whether or not the links are good enough to justify the installation of a new set of pins and bushings.

The pins and bushings, and their relation to each other and to the sprockets, constitute the most important factor in track life. Since only the external wear on the bushing is apparent some means other than casual inspection must be used to determine the amount of wear on the pins and on the inside bore of the bushing. The amount of "stretch" in the track, as indicated by the take-up on the track-adjusting screw, is usually regarded as an index to the condition of the interior wear on the bushings and the wear on the pins. However, this must be considered in connection with the external wear on the bushings in order to determine the proper time for turning the pins and bushings.

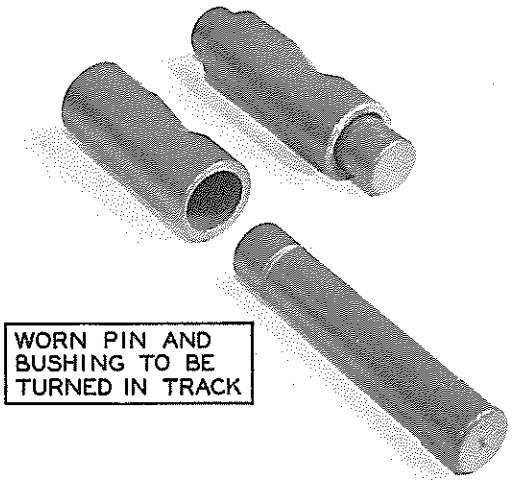

FIG. 6

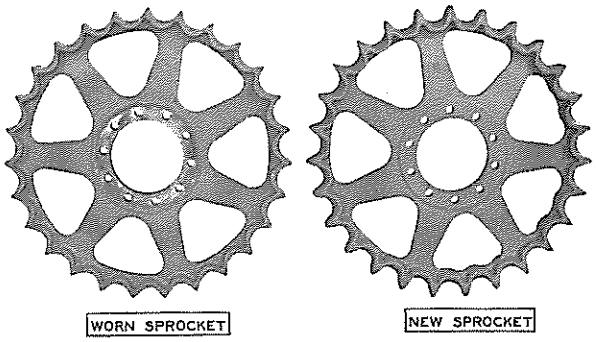

FIG. 7

When pins and bushings are pressed out of the track, turned 180 degrees and reinstalled, new contact surfaces are brought into play between the pin and bushing and between the bushing and the sprocket. If this operation is performed at the right time, track life will be prolonged.

It must be remembered too, that as the tracks wear and the pitch length increases, the point of contact of the bushings on the sprocket teeth changes. Any appreciable wear at the base of the sprocket tooth tends to decrease its pitch, whereas the wear on the track increases its pitch length. As a result, the bushing is inclined to ride higher on the sprocket tooth. In such case, the sprocket will finally spin in the track. Under no condition should the combined wear of sprocket and track be allowed to reach the stage where such spinning of the sprockets can occur. This causes extremely severe repeated shock to the tractor and will result in serious breakage. While it is always preferable to install new sprockets with new tracks, it may not be possible, and in this case the right and left sprocket should be interchanged, thus presenting the better side of the tooth to the bushings.

To serve as an indication of the amount of wear in the pins and bushings, we have indicated in the attached figure, the pitch length of a new track and the maximum allowable pitch length for a used track. Note that in the column dimensions there are shown both these dimensions for each of the "HD" series; namely, HD-14, HD-10, and HD-7 in order.

Some owners have erroneously adopted the practice of removing one link in order to bring the track again within the range of the adjustment screw. This should never be done, as a track worn badly enough to take up the length of one link will be so far out of pitch that the increased wear on the sprocket will far more than counteract the saving that may be obtained by any further life of the track itself.

Occasionally, under extremely abrasive conditions, the sprocket tooth may wear deep enough into the bushing to justify turning pins and bushings before any appreciable wear shows on the inside of the bushing and on the pins. In other words, the pitch length of the track may only slightly exceed the new pitch length. In any case, the remaining thickness of the bushing is the determining factor. Pins and bushings must be turned before the bushing wears through and the pin is destroyed, or before the bushing becomes thin enough to allow it to crack in service.

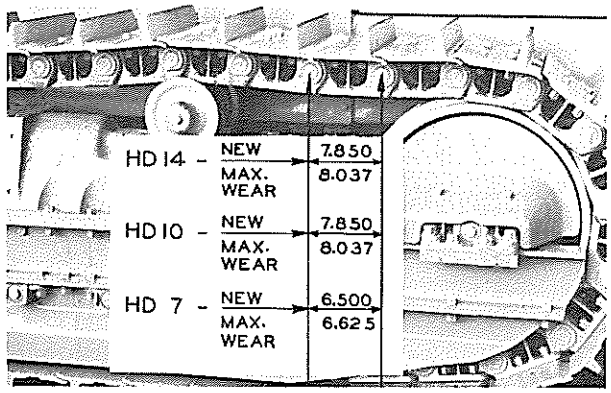

FIG. 8

120 -- "HD 7", "HD 10", "HD 14" Truck Frame

A. REMOVAL OF TRUCK FRAME:

1. Run tractor forward or backward until master pin is in position in forward center of the front idler. This pin can be identified easily as it extends through the rail boss ¼". Fig. 1.
2. Hold bucking bar against back side of rail boss close to pin and use heavy drift and drive the pin through. Fig. 2.

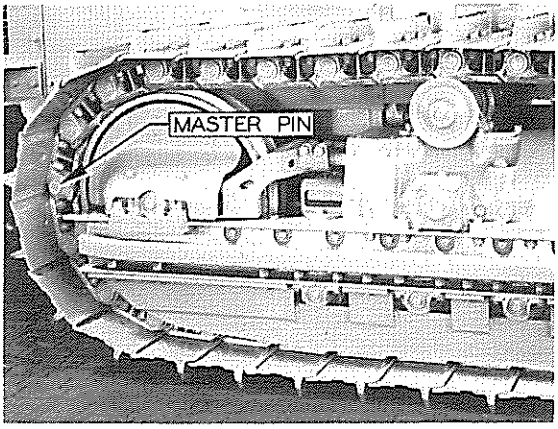

FIG. 1

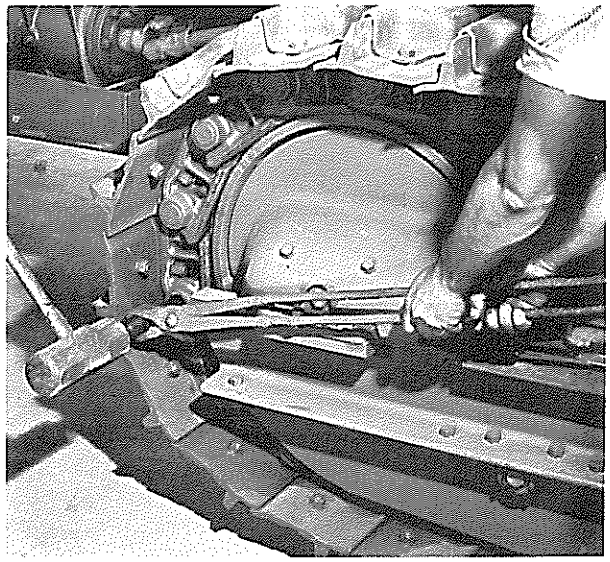

FIG. 2

3. Run tractor backward and track will roll over sprocket to the ground.
4. Remove the rear axle cap and sprocket guard.
5. Remove the bolts holding rear axle bracket to truck frame.
6. Take bar and slide front idler over the front end of truck frame and roll ahead on rail.
7. Remove end caps from stabilizer crank and straighten the lockwasher and remove the bolt, lockwasher and thrust washer from end of the shaft.
8. Remove the bolts holding the track release housing to frame and remove the housing.
9. Remove the equalizer spring seat and U-bolt from truck frame.
10. Jack up side of tractor to relieve weight on truck frame and roll ahead on track until it clears the tractor.

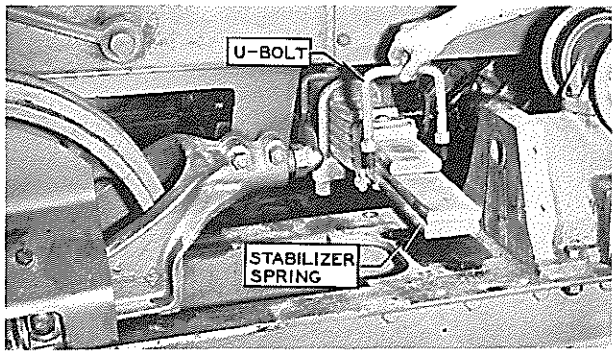

FIG. 3

11. Bolts holding the truck wheels to truck frame, and also the inner and outer guard may now be removed.
12. The truck frame is now free to be disassembled.

B. ASSEMBLE TRUCK FRAME:
Reverse the removal procedure.

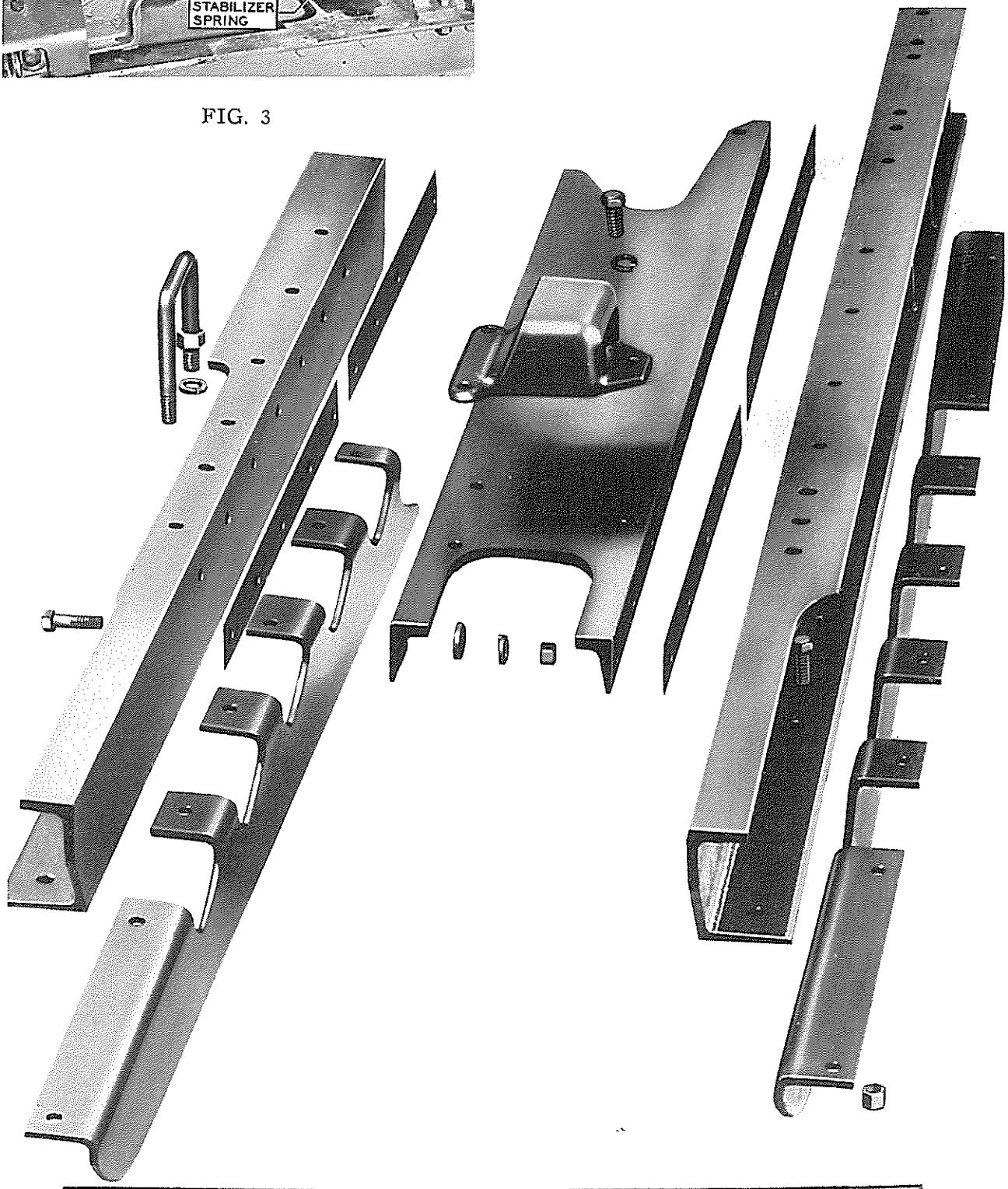

EXPLODED VIEW OF TRUCK FRAME ASSEMBLY

121 --"HD 7", "HD 10", "HD 14" Truck Wheels

A. REMOVAL OF TRUCK WHEEL:

1. Loosen clamp bolts on track adjusting screw and loosen track as much as possible, or uncouple tracks. See Topic 119-A.
2. Place 12"x 12"block under front side of track and drive tractor forward till block is directly under front truck wheel.
3. Place 12" x 12" block at rear of track under sprocket. Back tractor on block so weight is supported on idler and sprocket and slack hangs under truck wheels and just clears the ground.
4. Remove the bolts holdings outside guard to the truck frame and take off the guard.
5. Remove the bolts holding truck wheel brackets to truck wheel frame and wheel can be tipped out over rail.
6. In some cases on the rear or front truck wheel it may be necessary to remove truck wheel next toward center of truck frame to allow it to clear truck frame and rail.

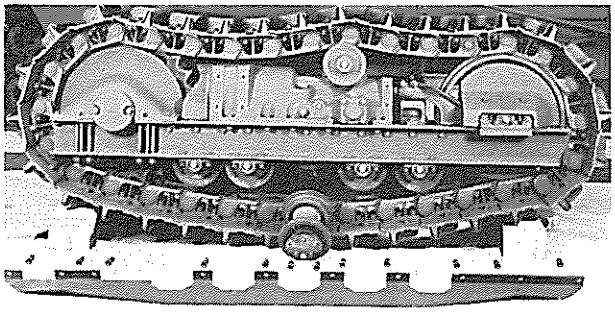

FIG. 1

B. INSTALL TRUCK WHEEL:

Reverse the removal process; replace the guards and adjust tracks to proper adjustment.

122 -- Repairing Truck Wheels, Front Idlers and Support Rollers

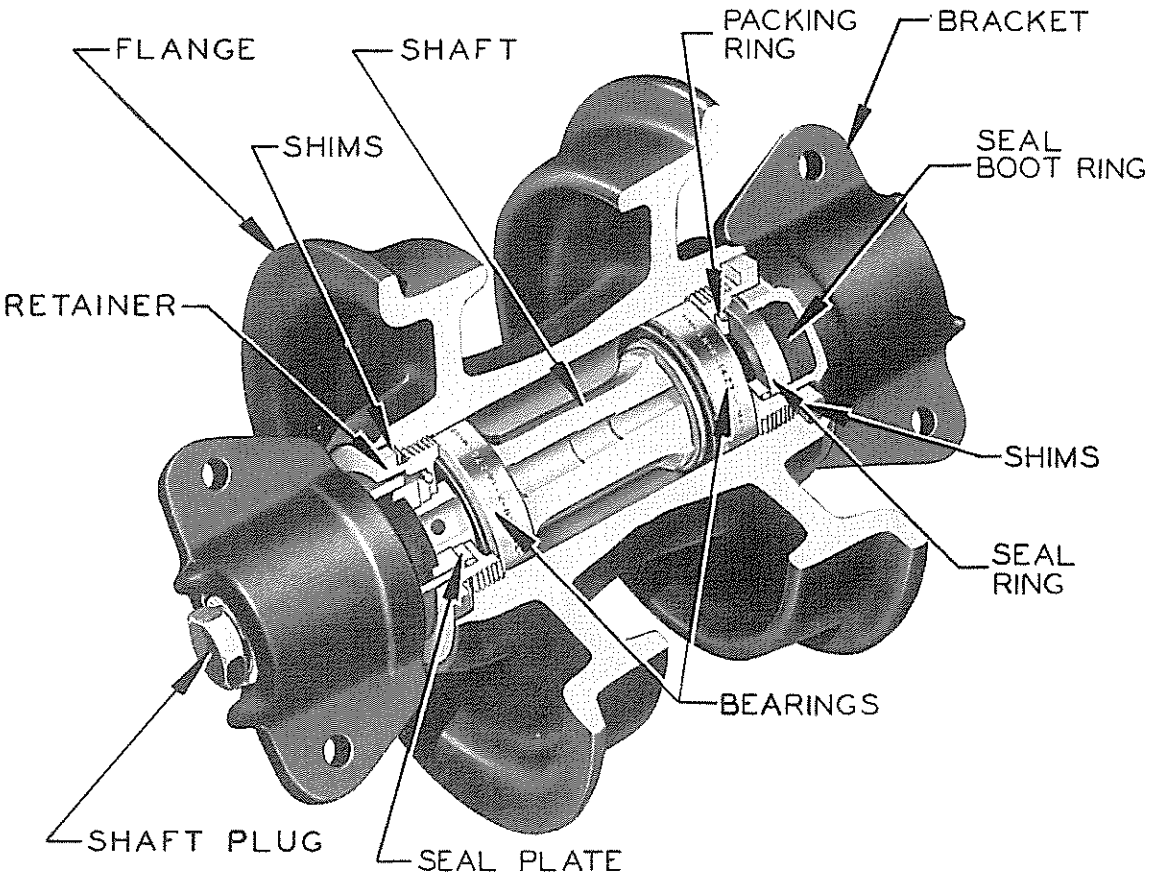

FIG. 1

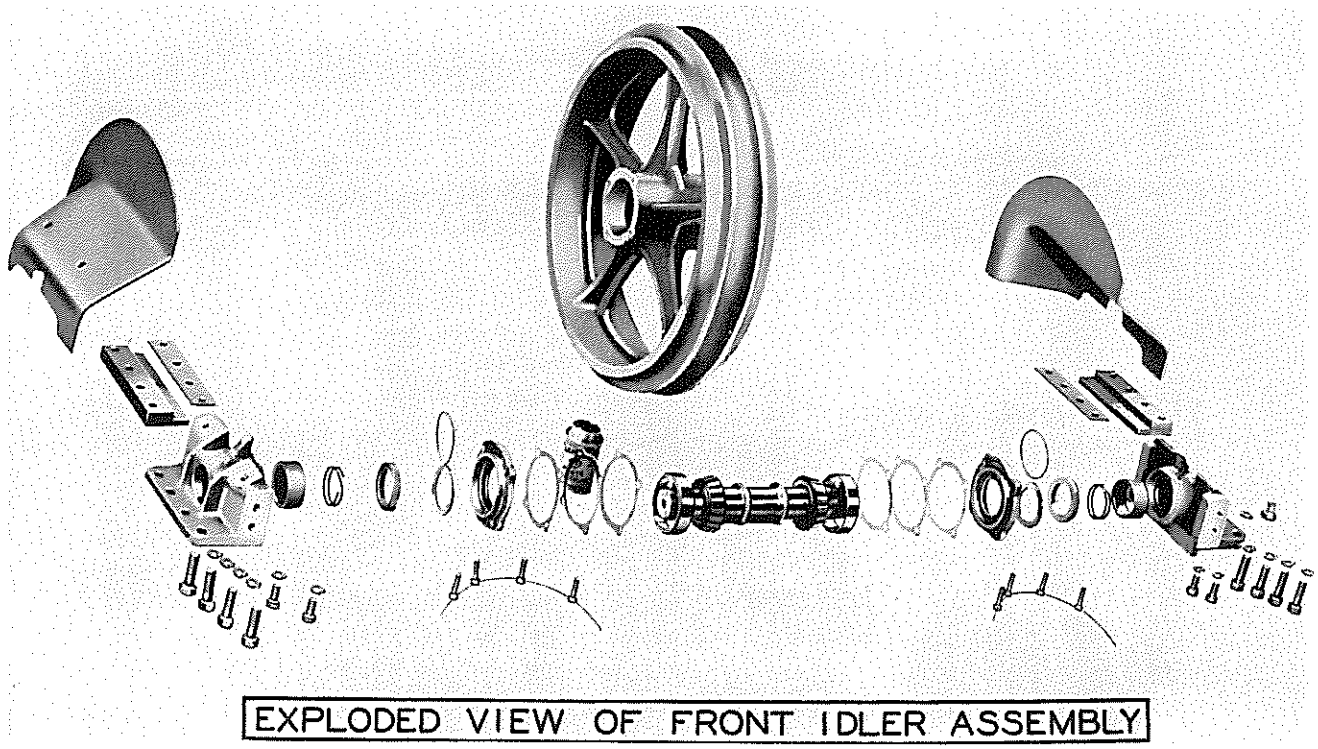
EXPLODED VIEW OF FRONT IDLER ASSEMBLY

FIG. 2

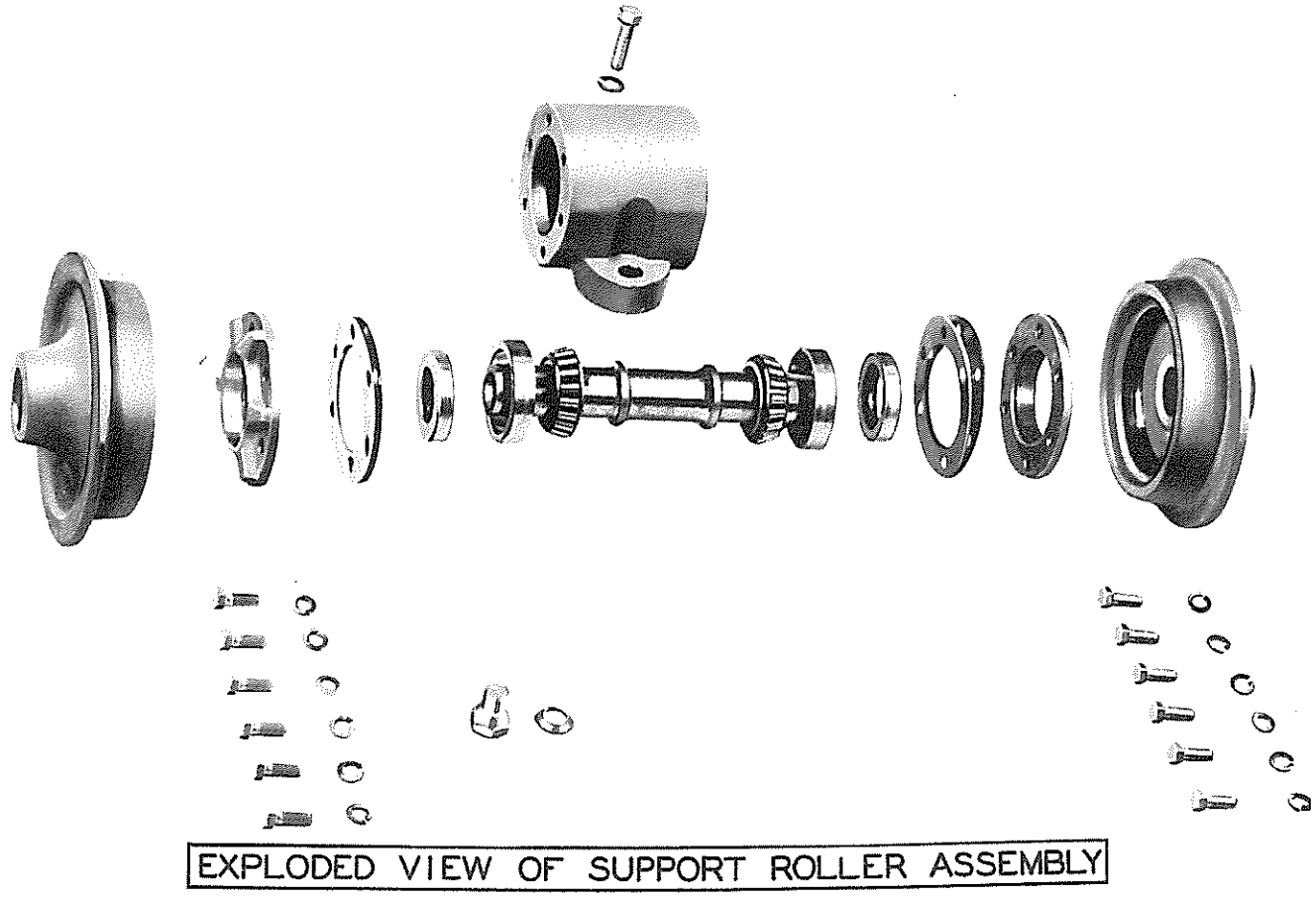
EXPLODED VIEW OF SUPPORT ROLLER ASSEMBLY

FIG. 3

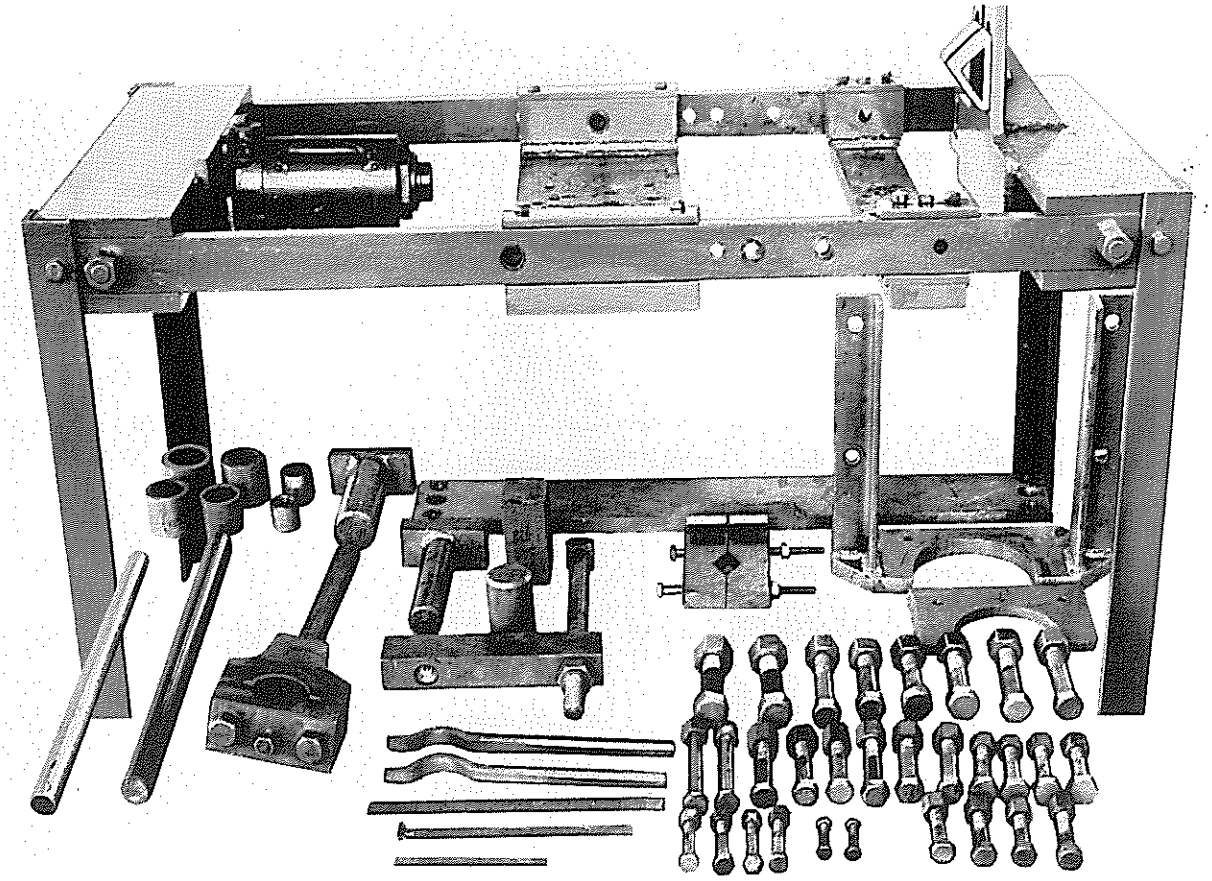

FIG. 4

The positive Seal Truck Wheels, Front Idlers and Support Rollers, because of the precision type seals and bearings used, must be carefully and correctly dismantled and assembled when repairs are made.

CAUTION: All repair work must be done in a clean place where all parts of these assemblies can be kept absolutely clean during reassembly.

Shown in Fig. 1 is a typical Positive Seal Truck Wheel. The names of the parts shown are those used in the following detailed servicing instructions. The sequence of steps during disassembly are as follows: Fig. 4 shows the special press and tools available through the Allis-Chalmers Mfg. Co. for the proper servicing of the Positive Seal Assemblies. It is recommended that no attempt be made to repair these assemblies without the use of this equipment.

The "HD 10" Truck Wheel is used to illustrate service instructions. The other models are serviced in the same manner except that different adapters and tools must be used in some cases. Adapters and tools required for ALL Positive Seal Assemblies are included with the special press shown in Fig. 4.

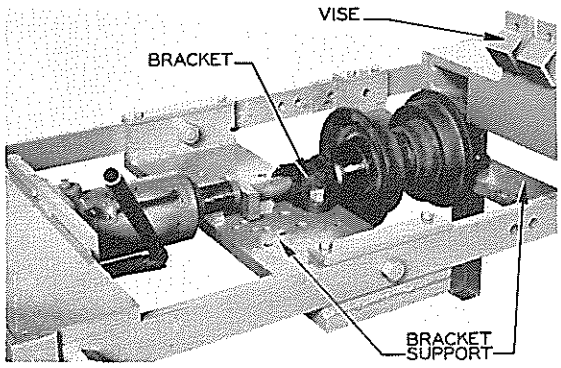

FIG. 5

A. DISASSEMBLE TRUCK WHEEL OR IDLER:

1. Remove assembly from tractor, remove shaft plug and gasket allowing oil to drain out.
2. Place assembly in press Fig. 5 and bolt brackets to bracket support plates with bolts shown in following chart (A). Use holes in support plates which fit the particular assembly being serviced. In some cases support plates will have to be reversed.

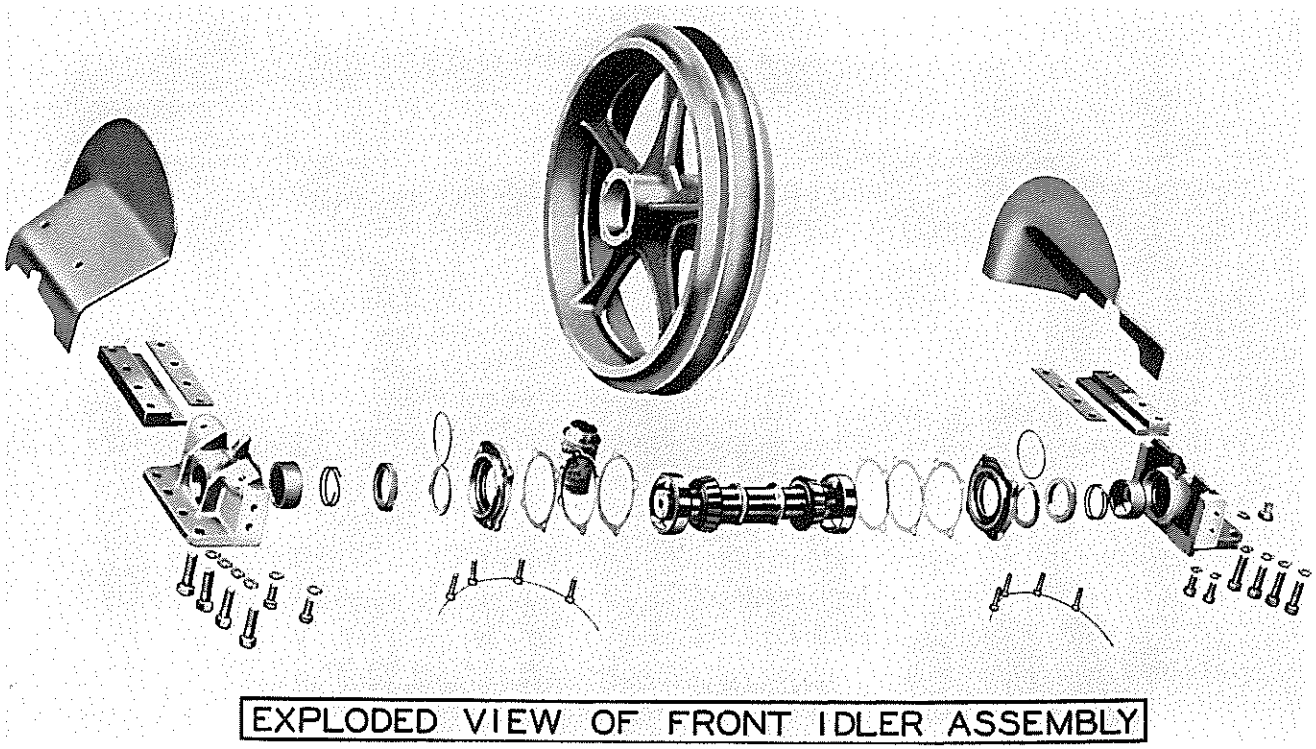
EXPLODED VIEW OF FRONT IDLER ASSEMBLY

FIG. 2

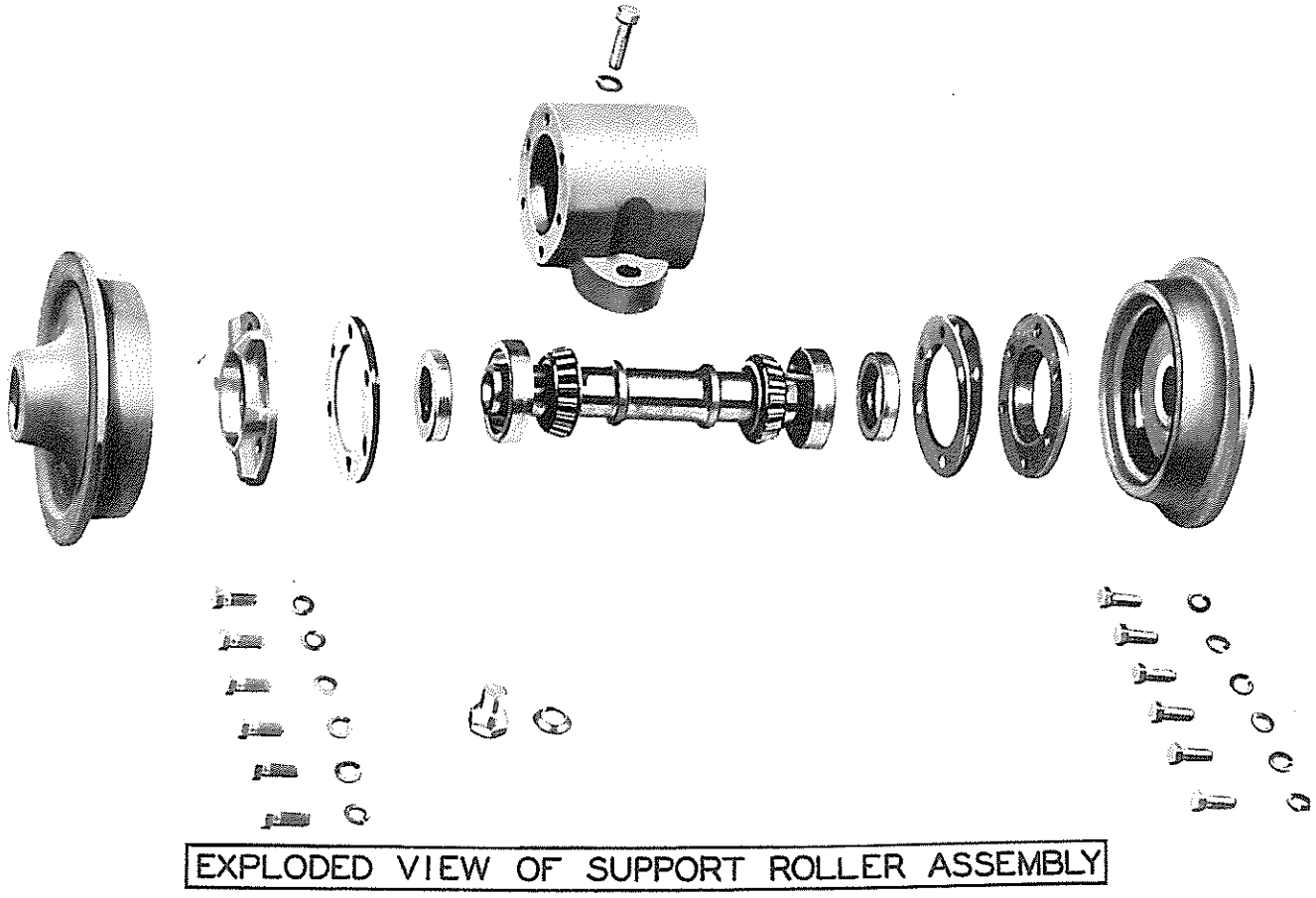
EXPLODED VIEW OF SUPPORT ROLLER ASSEMBLY

FIG. 3

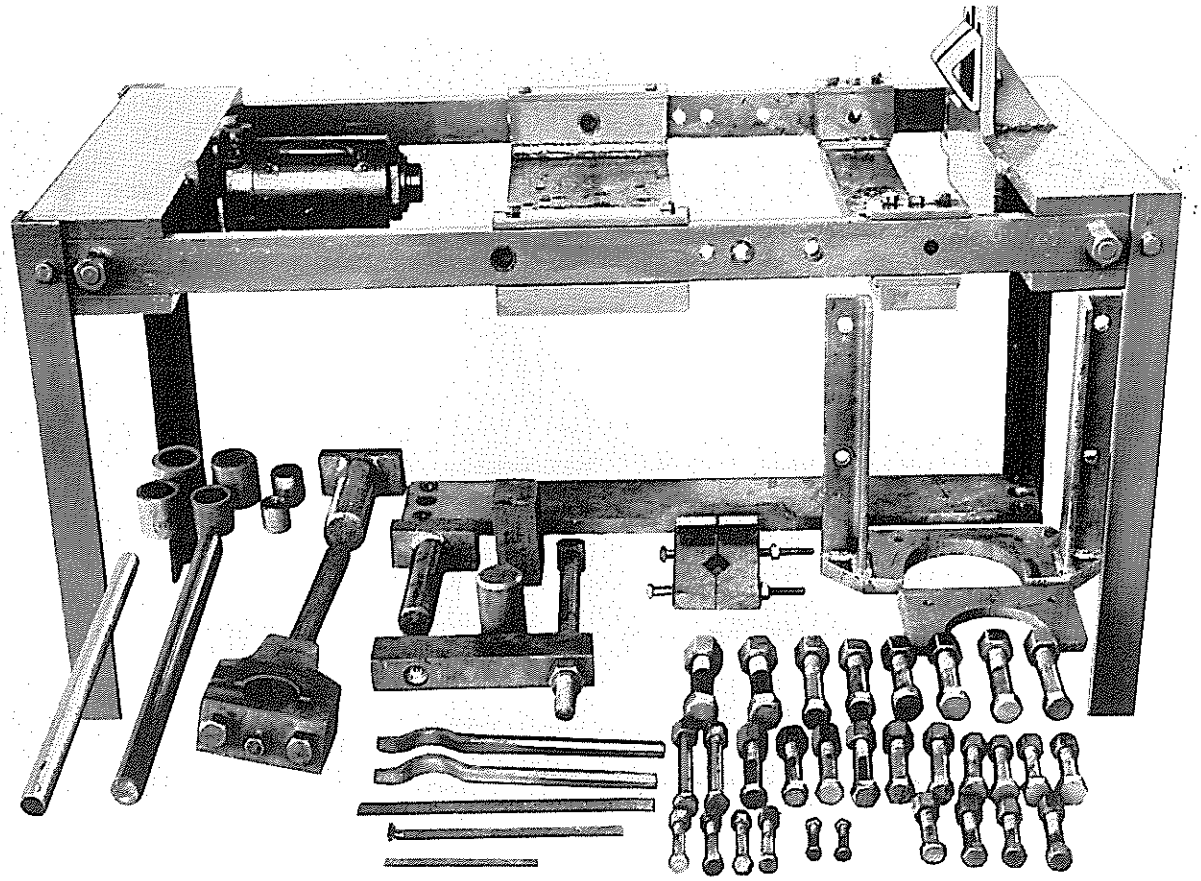

FIG. 4

The positive Seal Truck Wheels, Front Idlers and Support Rollers, because of the precision type seals and bearings used, must be carefully and correctly dismantled and assembled when repairs are made.

CAUTION: All repair work must be done in a clean place where all parts of these assemblies can be kept absolutely clean during reassembly.

Shown in Fig. 1 is a typical Positive Seal Truck Wheel. The names of the parts shown are those used in the following detailed servicing instructions. The sequence of steps during disassembly are as follows: Fig. 4 shows the special press and tools available through the Allis-Chalmers Mfg. Co. for the proper servicing of the Positive Seal Assemblies. It is recommended that no attempt be made to repair these assemblies without the use of this equipment.

The "HD 10" Truck Wheel is used to illustrate service instructions. The other models are serviced in the same manner except that different adapters and tools must be used in some cases. Adapters and tools required for ALL Positive Seal Assemblies are included with the special press shown in Fig. 4.

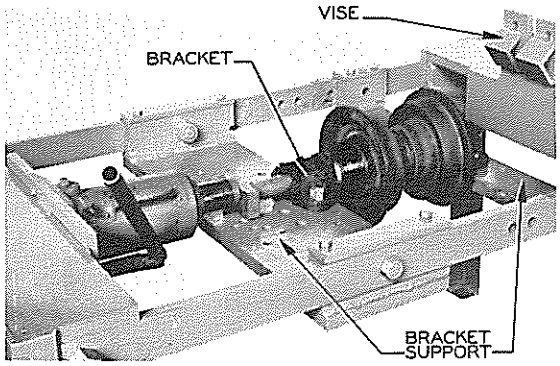

FIG. 5

A. DISASSEMBLE TRUCK WHEEL OR IDLER:

1. Remove assembly from tractor, remove shaft plug and gasket allowing oil to drain out.
2. Place assembly in press Fig. 5 and bolt brackets to bracket support plates with bolts shown in following chart (A). Use holes in support plates which fit the particular assembly being serviced. In some cases support plates will have to be reversed.

CHART "A"

Models "HD 14" & L; "HD 10" & S

IDLER BRACKETS	4 bolts	7/8" N.F. x 3¾"
	2 bolts	7/8" N.F. x 3¼"
TRUCK WHEEL BRACKETS	4 bolts	¾" N.F. x 3 "

Models "HD 7" & K

IDLER BRACKETS	4 bolts	5/8" N.F. x 2½"
	2 bolts	5/8" N.F. x 2¾"
TRUCK WHEEL BRACKETS	4 bolts	5/8" N.F. x 2½"

Model "M"

IDLER BRACKETS	4 bolts	5/8" N.F. x 2¾"
	2 bolts	5/8" N.F. x 4½"
TRUCK WHEEL BRACKETS	4 bolts	½" N.F. x 2½"

CAUTION: Use high nuts with all bolts and make sure they are tightened securely.

3. After brackets have been securely bolted down to the support plates, make sure that rear support plate is free to slide along frame of press and press shaft out of bracket. Tap bracket with hammer while pressing shaft out. When removing shaft from bracket, be careful not to damage seal ring.

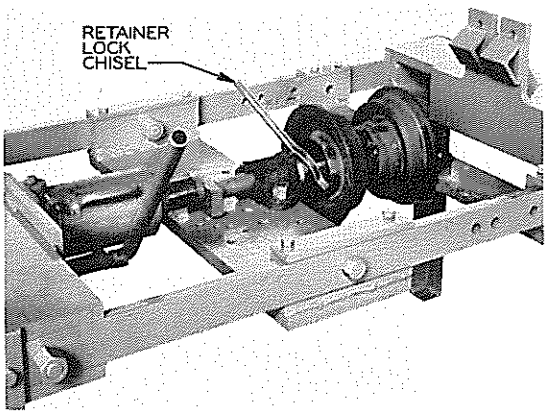

FIG. 6

4. Use retainer lock chisel and straighten up the 2 retainer locks on each end of the assembly.

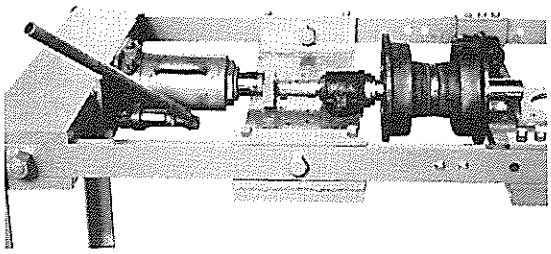

FIG. 7

5. Turn assembly around and press shaft out of the other bracket. Block up under shaft at opposite end of assembly to keep it level.
6. Install truck wheel in vise. Adjust vise to fit wheel by raising or lowering jaws and adjusting vise clamp. Then use adapter and jack to hold wheel.
7. Install retainer wrench on shaft and remove retainers.

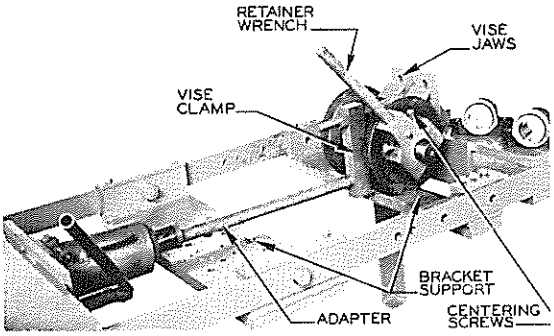

FIG. 8

NOTE: Adjust retainer wrench to fit retainer as follows:

a. Loosen 2 capscrews in bottom of wrench and adjust lugs on wrench to fit retainer slots.
b. Center retainer wrench on shaft using the 3 centering screws.

Use a heavy hammer on the handle of the retainer wrench to loosen the retainers.

NOTE: The model "HD 14", HD 10", "HD 7" Front Idlers will not require the use of the retainer wrench as the retainers on these assembles are held in with capscrews.

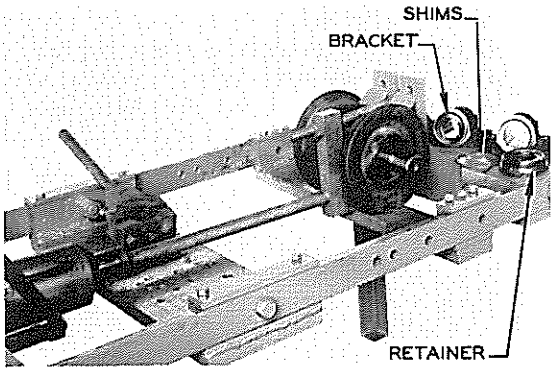

FIG. 9

8. Shims removed should be kept with their respective retainers and the retainers marked so they can be assembled in their original position.
9. Using a hammer and a block of wood, drive against one end of the shaft removing shaft, bearings and one bearing cup. Use retainer lock chisel to remove

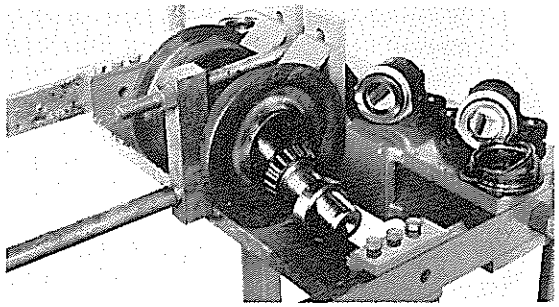

FIG. 10

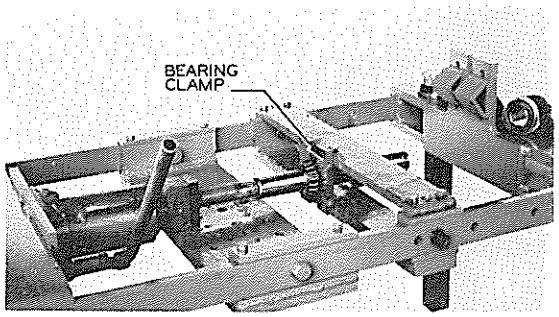

FIG. 11

the bearing cup remaining in the wheel.

10. Install bearing clamp on press as shown in Fig. 11 and press shaft out of bearing.

NOTE: If the assembly is equipped with Hyatt Spherangular bearings it will be necessary to use a hacksaw and cut two flats directly opposite each other on each shoulder of the shaft before installing bearing clamp. Reverse bearing clamp so that the straight edges face each other and install back of bearing on the two flats cut on the shoulder of the shaft.

B. REASSEMBLE TRUCK WHEEL OR IDLER:

IMPORTANT: Thoroughly wash and clean all parts before reassembling. Make sure that oil passages in shaft are open. If new shaft is to be installed, use a chisel

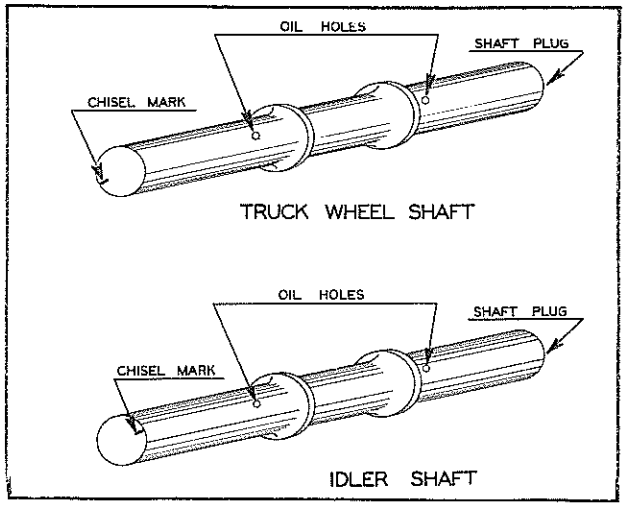

FIG. 12

and mark end of shaft opposite shaft plug, as shown in Fig. 12. These marks are to be used as a guide when pressing the brackets on the shaft so that the oil holes in the shaft will be on the top side of the shaft when the assembly is reinstalled on the tractor. In ALL cases the mark on the end of the shaft should be UP when pressing the brackets on the shaft.

1. Select one of the bearing guides furnished that will just fit inside the inner race of the bearing and adjust jaws of bearing clamp so that bearing guide will just slip through between them.

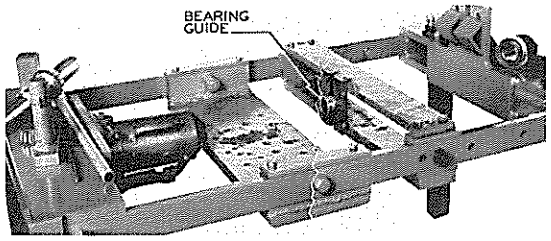

FIG. 13

2. Start bearing on end of shaft, place bearing guide in inner race of bearing, install in press and press bearings on shaft.

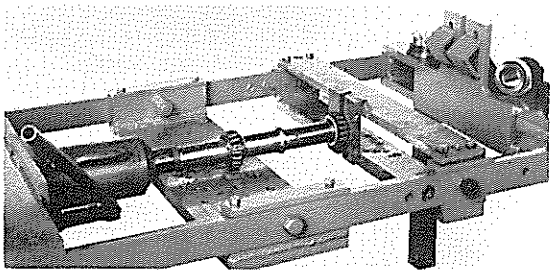

FIG. 14

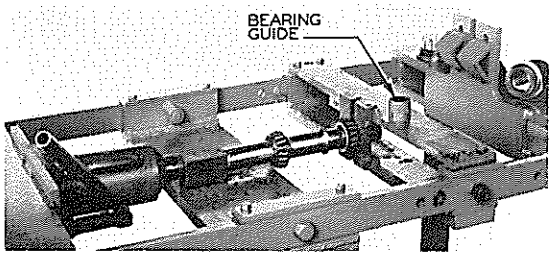

FIG. 15

3. Using retainer lock chisel, install bearing cup in one end of the wheel. Insert shaft with bearings into wheel and then install the other bearing cup. Coat all bearings and cups with Allis-Chalmers Mfg. Co. approved oil.
4. Install Neoprene seal ring in groove in seal plate.

   CAUTION: Do not roll seal ring into groove as this is likely to leave a twist

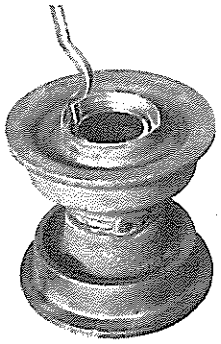

FIG. 16

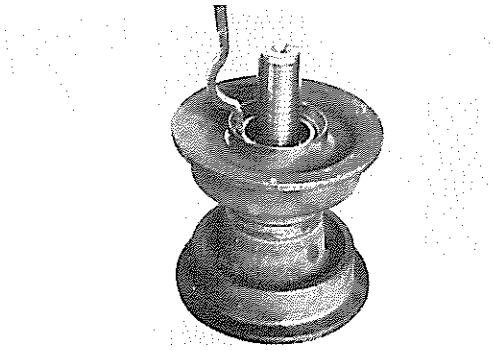

FIG. 17

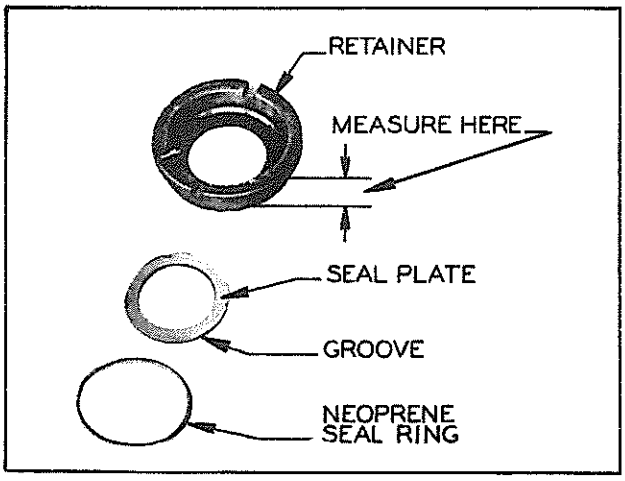

FIG. 18

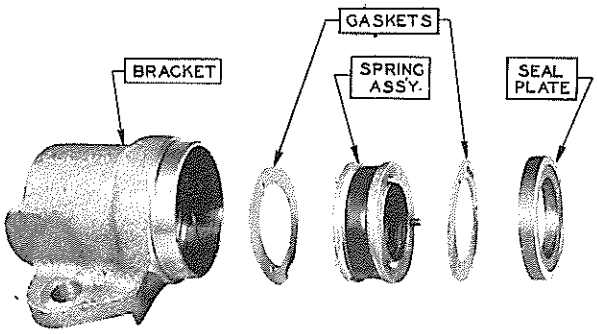

FIG. 19

or roll in the ring causing a leak. Ring MUST lie in groove evenly without being twisted.

5. Before installing seal plates in retainers thoroughly clean the inside of the retainer with emery cloth or sand paper, then wash to remove all dust and paint. IMPORTANT: Notice the chamfer on one side of the inner bore of the seal plate. Seal plate should be installed in retainer so chamfer will be towards truck wheel when retainer is installed in wheel.
   Press seal plate into retainer with fingers. Use clean approved oil on Neoprene ring when installing seal plate in retainer. Be careful not to damage, mar or scratch surface of seal plate. Inspect seal plate after installation in retainer to determine if it seats properly in retainer and is parallel with the back wall of the retainer. There should be a slight springback when seal plate is pressed tight against back wall of retainer.
6. Place truck wheel in vise. Install retainers in wheel using the original shims removed with retainer. If shims have been mixed up so this is not possible, install new shims. These shims are in the following thicknesses: 1/32", .010" and .007".
   CAUTION: Make sure shims seat on shoulder of retainer and do not get into threads or between retainer and bearing. Use retainer wrench and tighten retainer. Tighten retainers securely by using a heavy hammer on the handle of the retainer wrench.
7. Using a bar of soft steel and at least 8 lb. hammer, drive first on one end of the shaft and then on the other to position the bearing cups tight against the retainers. Then determine whether the bearings have the proper amount of preloading. When bearings are properly adjusted a slight drag can be felt when turning the shaft by hand.

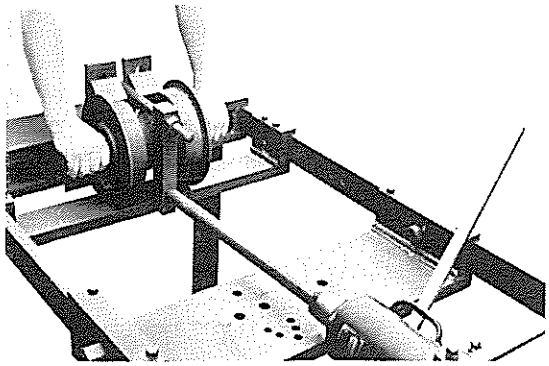

FIG. 20

8. If bearings are too tight or too loose, it will be necessary to remove or add shims as needed. To do this, remove retainer from one end of wheel. Then add or

remove the estimated number of shims required and reassemble.
CAUTION: Never remove an excessive amount of shims from one end of the wheel. That is, the amount of shims in one end of the wheel must not vary from those in the other end by more than the following amounts:

TRUCK WHEELS	.020″
FRONT IDLERS	.030″

9. After wheel is again reassembled the bearing cups should be positioned and the preload of the bearing tested as explained in paragraph 7. If the bearings need further adjustment, the additional shims required should be added or removed from the end of the truck wheel opposite to where the shims were added or removed for the first adjustment; outlined in paragraph 8.
10. After bearings have been properly adjusted and retainers tightened securely, lock the retainers with the retainer lock chisel by driving a section of the wheel hub into the 2 slots provided in the retainer.
NOTE: The retainers in Front Idlers are locked with wire strung through the heads of the retainer capscrews.

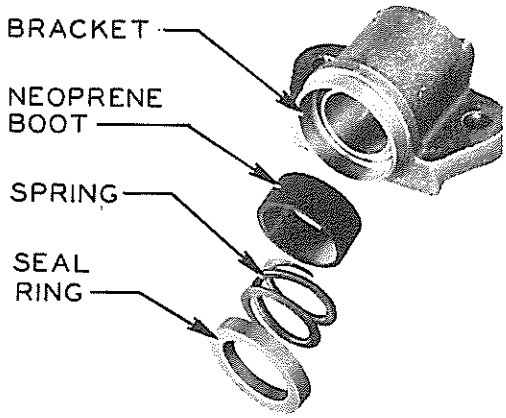

FIG. 21

11. Cement Neoprene boot in outer seal ring and in bracket. Do not use an excessive amount. Use a small screw driver when cementing boot and work out all air bubbles which may be trapped under boot in grooves. This assures a tight bond between boot and metal. Set bracket with face of seal plate up. Place weight on seal ring using a clean cloth between weight and ring and allow cement to dry for at least one hour.
CAUTION: Do not damage, mar or scratch seal ring face.

NOTE: New seal boots are recommended. However, the old boots may be revived, if they are not broken or worn. Boots that are hard and bulged may be returned to their original size, shape and elasticity by placing in water at about 200° F. for approximately one minute. They can then be cemented into the seal ring and bracket as directed above.

12. Bolt bracket to press bracket support using holes and bolts originally used to remove bracket. Tighten bracket down

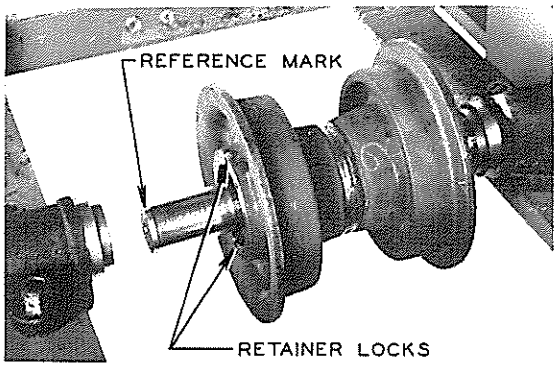

FIG. 22

securely so that the holes in the bracket support will not be elongated when pressing the bracket on. Install truck wheel in press and start shaft into bracket making sure that the reference mark on the end of the shaft is up as shown in Fig. 22.

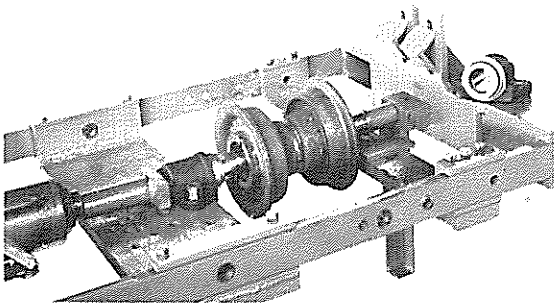

FIG. 23

13. Place proper blocking between end of shaft and end plate of press and press bracket onto shaft. Inspect seal ring and seal plate faces before they contact each other. Make sure they are perfectly clean, lubricate them with clean oil and press into place as outlined in next paragraph.
NOTE: That both press bracket supports are free to slide in this operation.
14. When the first or "A" bracket is installed as instructed, press on shaft until the measurement between the face of the retainer and the machined shoulder of the bracket is as follows for the different assemblies:

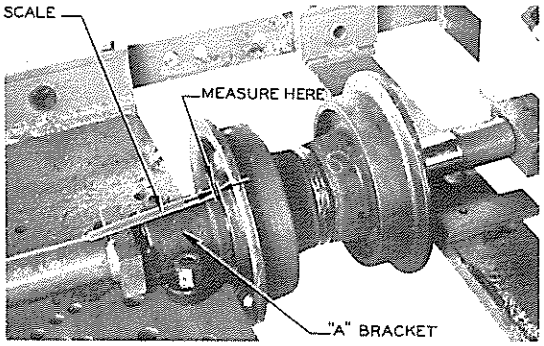

FIG. 24

ALL TRUCK
WHEELS 3/16" plus or minus 1/32"
ALL FRONT
IDLERS 3/32" plus or minus 1/32"
CAUTION: If the outside face of the retainer is worn, the amount of wear must be taken into consideration and added to the dimensions given above. The amount of wear can be determined by measuring the thickness of the retainer before it is assembled into the wheel and then comparing this measurement with the following measurements given for new retainers:

NEW RETAINER THICKNESS

MODEL	TRUCK WHEELS	FRONT IDLERS
"M"	1 1/16"	1 1/16"
"HD 7"	1 1/16"	1 "
"HD 10"	1 1/16"	1 3/16"
"HD 14"	1 1/4 "	1 1/8 "

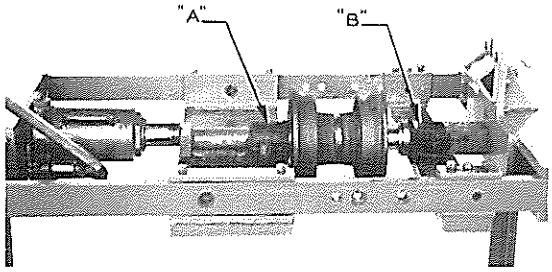

FIG. 25

15. Remove blocking between end of shaft and end plate. Bolt "B" bracket securely to narrow bracket support. Block between "B" bracket and end plate of press, using suitable adapter between end of shaft and jack. Press shaft into "B" bracket as outlined in paragraph 16. CAUTION: Be sure that adapter used between end of shaft and jack contacts END OF SHAFT rather than the bracket "A."
16. The "B" bracket is to be pressed on the shaft just far enough so that the distance

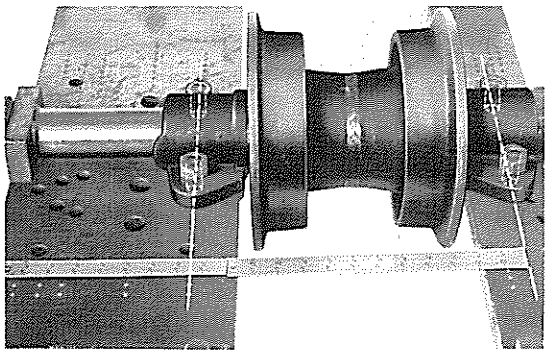

FIG. 26

between the bolt holes in the "A" bracket and those in the "B" bracket will coincide with the spacing of the holes in the truck frame channels to which the assembly will be bolted when reassembled to the tractor. Refer to Fig. 26 for the proper procedure for determining this measurement and notice that the measurement is made between the center punch marks coinciding with the center line of the holes being used to bolt the brackets to the bracket supports.
See following chart for the correct center-to-center measurement of bracket bolt holes:

MODEL	TRUCK WHEELS	FRONT IDLERS
"M"	10 5/8 "	13 1/32"
"HD 7" & K	11 3/4 "	15 3/8 "
"HD 10" & S	13 7/16"	18 5/16"
"HD 14" & L	15 7/16"	20 3/16"

The above measurements should be taken on both sides of the truck wheel and the "B" bracket pressed on the shaft so that the average of the two measurements will be as close as possible to the correct dimension given in the chart.
17. Lubricate wheel with proper lubricant and install plug with gasket in end of shaft.

123 -- Rebuilding Support Roller

The Track Support Roller differs slightly from the other Positive-Seal Assemblies in construction and the following procedure should be used when repair is necessary: ("HD 10" Support Roller is Shown).

A. DISASSEMBLE TRACK SUPPORT ROLLER:

1. Place support roller bracket on bracket support of press. Line up proper holes and bolt down tight. Use 4 bolts 5/8" x 2½" with high nuts.

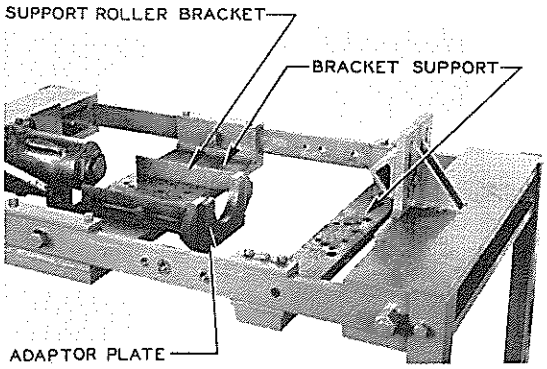

FIG. 1

NOTE: Adapter plate shown installed on support roller bracket in Fig. 1 is used with Model "HD 7" support rollers. The adapter plate is bolted to the support roller bracket with 2 bolts 3/8" x 1¼".

2. Install support roller in press so that one flange fits down in bracket and hub of opposite flange rests on narrow bracket support. Make sure that narrow bracket support is free to slide and using suitable adapters, press shaft out of flange.

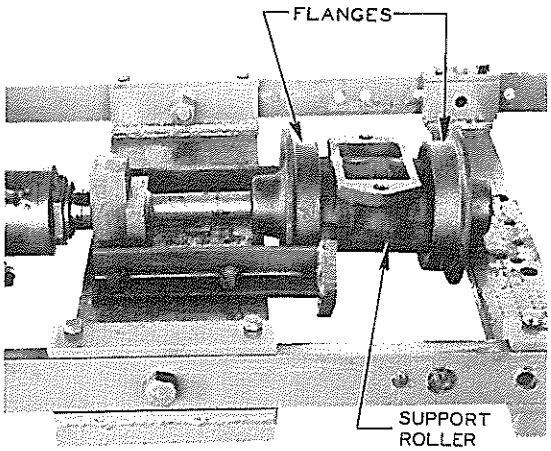

FIG. 2

3. Reverse support roller in press, block up under end of shaft from which flange has been removed to keep assembly level, and press shaft out of other flange.

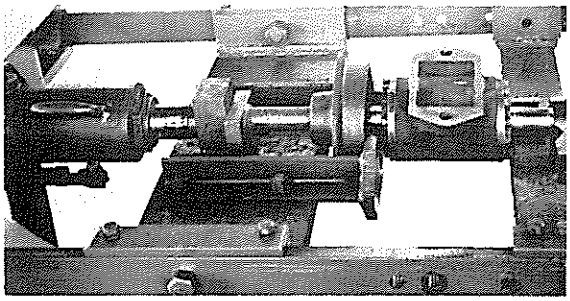

FIG. 3

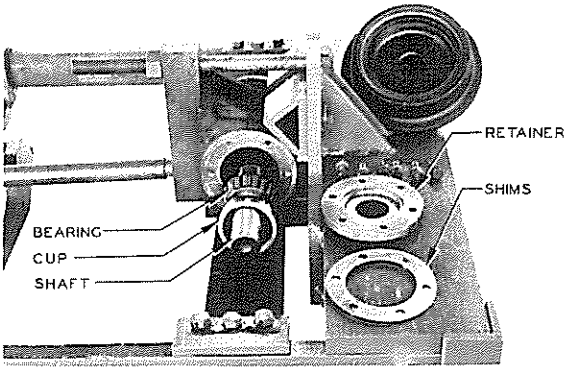

FIG. 4

4. Place support roller in vise of press and remove 6 capscrews from the retainer in each end of the roller. Remove retainers and shims marking each so that they may be installed in their original position with the original shims.
5. Remove shaft, bearings and bearing cups from support roller using procedure as outlined in paragraph 9 and 10, Topic 122-A, truck wheel disassembly.
6. Remove oil seal from each retainer.

B. REASSEMBLE TRACK SUPPORT ROLLER:

1. Reassemble bearings on shaft and install shaft and bearings with cups in support roller as outlined in paragraphs 1, 2 and 3, Topic 122-B, of truck wheel reassembly.
2. Install retainers on support roller using original shims. If original shims have been damaged or lost, use from .003" to .047" of shims between each retainer and the support roller. Tighten the retainer capscrews securely and inspect the bearing adjustment. The bearings are properly adjusted when the shaft will turn freely, but without end-play. It may be necessary to add or remove a few thousands thickness of shims from one end to get the proper adjustment.

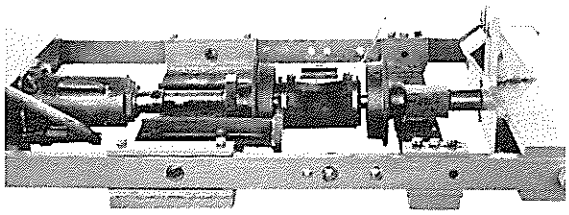

FIG. 5

3. After the bearing adjustment has been made and the retainer capscrews locked in place, install the oil seals in the retainers using the retainer lock chisel and hammer to drive them into place.
   NOTE: ALWAYS install oil seals with lip away from retainer or toward the roller flange.
4. Start the two flanges on the ends of the shaft and place support roller in the press as shown in Fig. 5. Block between one flange and the end-plate of the press and use an adapter between the jack and the other flange which will contact the flange rather than the shaft. Then press on both roller flanges until the flange hub faces are even with ends of shaft.

124 -- The Serial Number

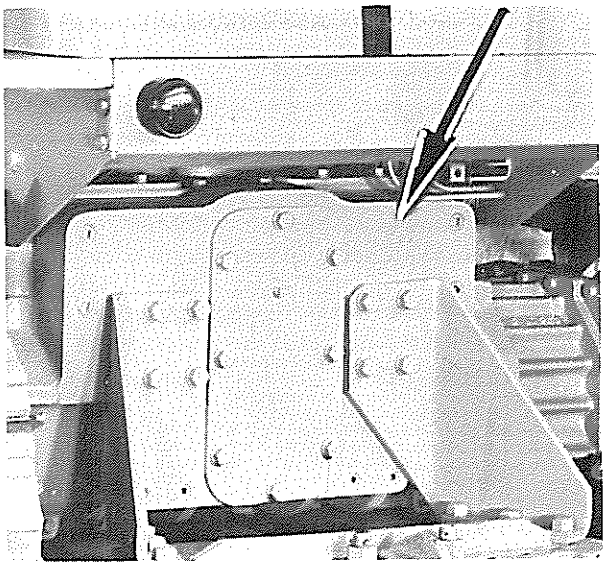

MODEL "HD 7" TRACTOR

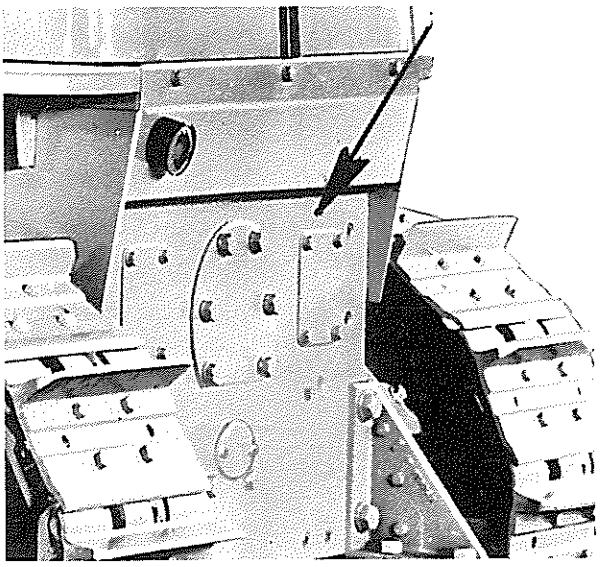

MODEL "HD 10" TRACTOR

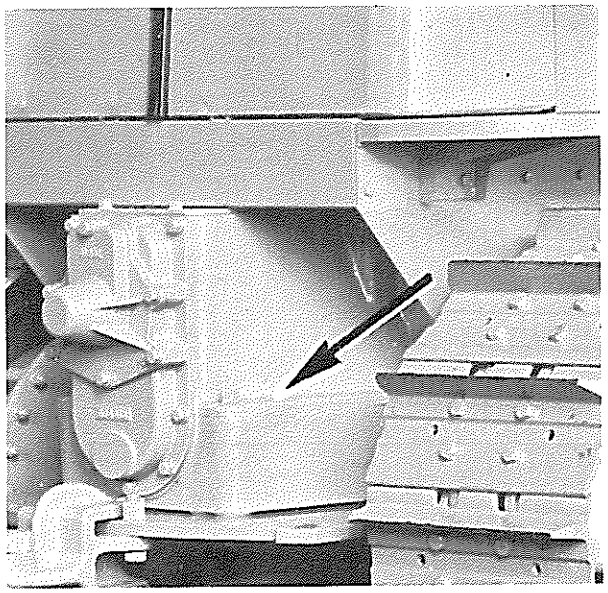

MODEL "HD 14" TRACTOR

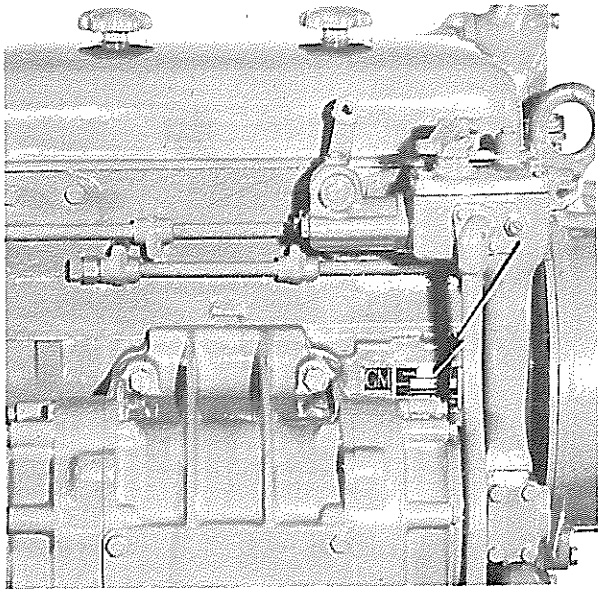

ENGINE

The Serial Number is IMPORTANT. A tractor has a serial number for the same reason that a man has a name. It is the legal identification used on bills of sale, contracts, mortgages and insurance policies. Also, it is absolutely necessary on all repair parts orders to insure getting correct parts. Don't fail to show correct serial number wherever required.

On HD7 and HD10 tractors the serial number is at upper right hand corner of back of transmission case; on the HD14 it is on the right hand side of rear transmission case—stamped into the top of flange.

Also most documents require, in addition, the engine serial number. This number will be found on right side of engine block just back of governor tower. Engine serial number must be shown on all orders for engine parts.

Insurance

It is advisable to carry insurance on your tractor. You can protect yourself from loss by fire, theft, personal liability, property damage, collision, submersion and other hazards. Because of the greater investment in tractor equipment, is is relatively more important to carry insurance on such equipment than on an automobile.

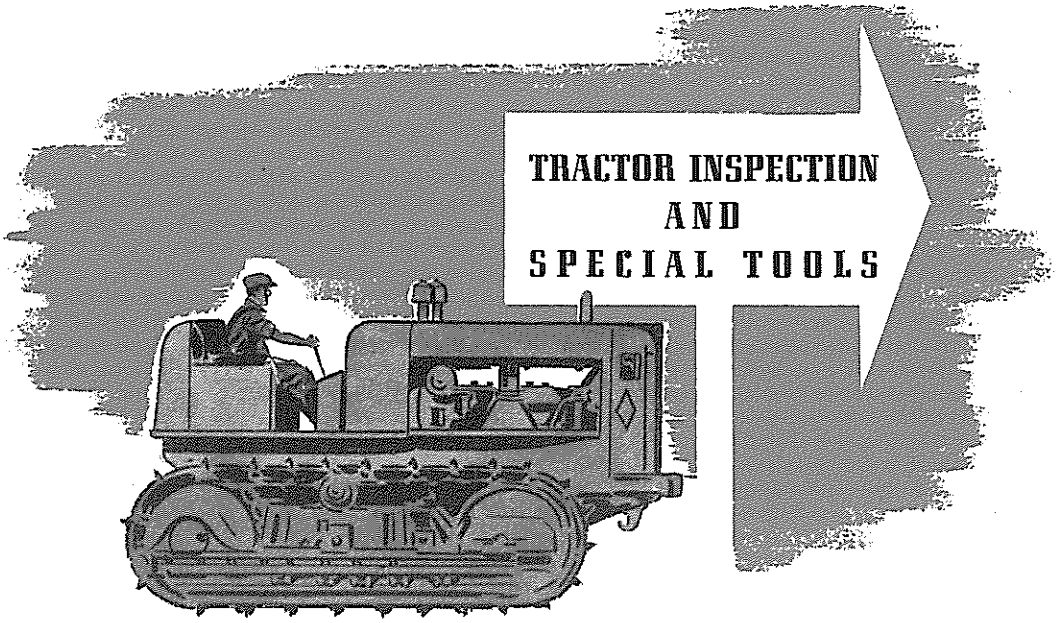

SAFETY:
Never attempt to clean, oil or adjust a machine while it is in motion—a complete observance of this simple rule will prevent many serious injuries.

126 -- SPECIAL TOOL EQUIPMENT "ALLIS-CHALMERS"

Some of the tools listed below are included as standard equipment with the tractor, while others are available as extra items.

Owing to the fact that the tool equipment list has changed a number of times, and also to difficulty in getting tools during war times, we have not attempted to list standard tool equipment to be included with each tractor.

ORDER FOLLOWING TOOLS FROM ALLIS-CHALMERS MFG. CO., SPRINGFIELD, ILL., TRACTOR DIVISION OR YOUR NEAREST ALLIS-CHALMERS BRANCH OR DEALER.

Part Number	Name of Item	Size
12377	Wrench kit "Set of 6 consists of"	
	end wrench	$\frac{7}{16}$" & $\frac{1}{2}$"
	end wrench	$\frac{9}{16}$" & $\frac{11}{16}$"
	end wrench	$\frac{19}{32}$" & $\frac{25}{32}$"
	end wrench	$\frac{5}{8}$" & $\frac{3}{4}$"
	end wrench	$\frac{7}{8}$" & $1\frac{1}{16}$"
	end wrench	1" & $1\frac{1}{4}$"
43769	Plug Wrench "Square Type"	$\frac{1}{2}$"
36429	Plug Wrench "Hex Type"	$\frac{3}{4}$"
12387	Hammer ball pein	$1\frac{1}{2}$" lb.
36268	Screw Driver	6"
12389	Pliers	6"
043421	Fan belt adjusting Wrench	$1\frac{7}{16}$"
040286	Fuel Pump Wrench	$\frac{1}{2}$"
040794	Engine Cranking Wrench	$1\frac{11}{32}$"
040272	Truck Wheel Plug Wrench	$1\frac{1}{32}$"
912898	Sprocket shaft clamp bolt—Hex Wrench HD 7	$\frac{3}{8}$"
912730	Sprocket shaft clamp—bolt Hex Wrench HD 10 & HD 14	$\frac{1}{2}$"
36263	Track bolt wrench HD 7	$\frac{3}{4}$"
71098	Track bolt wrench HD 10	1"
033630	Track bolt wrench HD 14	$1\frac{5}{32}$"
36155	Steering clutch cross shaft socket Wrench—HD 7 & HD 10	$2\frac{9}{16}$"
71311	Steering clutch cross shaft socket Wrench—HD 14	$3\frac{25}{32}$"
040736	Track release adjusting Wrench HD 7 & HD 10	$1\frac{29}{32}$"
040170	Track release adjusting Wrench HD 14	$2\frac{9}{32}$"
36086	Final drive end Wrench—HD 7	$2\frac{17}{32}$"
040285	Injector Service Kit	
040283	Valve lifter & Injector Removing Tool	
040284	Injector Nut Wrench	
034241	Hand Grease Gun	Small
034441	Hand Grease Gun	Large
034672	Flushing Lubricator—Approximately	6 Gal.
042740	Engine Pre-Heater	
042695	Engine Pre-Heater Inlet Elbow	
37990	Support Roller Puller	
033885	Universal Pinion Puller for all "HD" Series & Models "K, S & L" Tractors	
	Parts consist of the next 17 items.	
	1—033866 Bolt assembly	
	1—033869 Ram Assembly	
	1—033871 Nut Assembly	
	1—033873 Spacer Assembly	
	1—033875 Thrust Washer Bronze	
	1—033876 Thrust Washer	
	1—033882 Pedestal HD 14	

Part Number	Name of Item	Size
	1—033884 Adopter HD 14	
	1—033879 Pedestal Assembly HD 10 & S	
	1—033880 Adopter HD 7, HD 10—K & S	
	1—033878 Pedestal HD 7 & K	
	1—033877 Wrench	2"
	1—071337 Wrench	$3\frac{13}{16}$"
	1—034241 Kleenseal Grease Gun	
	1—033889 Tool Box Welded Assembly	
	1—033859 Padlock	
	3—910262 Lincoln Kleenseal Fitting	
033881	Pinion Puller Assembly for HD 14 & L	
033633	Pinion Puller Assembly for HD 10 & S	
033624	Pinion Puller Assembly for HD 7 & K	
044800	Support roller, front track idler, and truck wheel press complete—All Model A. C. Crawler Tractors.	
033450	Sprocket shaft puller, HD 7 — HD 10 —HD 14—K—S & L	

127 -- SPECIAL ENGINE TOOL EQUIPMENT "KENT MOORE"

ORDER FROM:

KENT-MOORE ORGANIZATION
General Motors Research Building
Detroit, Michigan, U.S.A.

—OR—

West Coast Warehouse
6647 Foothill Blvd.,
Oakland, California, U.S.A.

ALSO SUPPLIED BY:

CURTISS & SMITH MFG. CORP.
Engineered Maintenance Tools
Pottstown, Pennsylvania, U.S.A.

Part Number	Name of Item
J-1236	Cylinder liner remover and replacer (Power drive for tight liners.)
J-1479	Cylinder liner remover and replacer (Hand operated, for tight liners.)
J-1918	Cylinder liner remover. (loose type)
KMO-913	Cylinder checking gauge
J-1472	Main bearing cap puller
KMO-232	Piston ring remover and replacer
KMO-231	Piston ring compressor
J-1359	Flywheel housing oil seal expander
J-1227	Valve spring compressor and Injector remover.
J-1233	Valve stem guide remover and replacer.
J-1245	Push rod remover.
KMO-122	Valve guide cleaner.
KMO-239	Valve lapper (Hand operated)
KMO-324	Push rod holding wrench (½" 90-degree offset wrench.)
KMO-234	Valve seat reamer set, consists of the next 6 items.
	Kmo-234-1 Finishing cutter 60°
	Kmo-234-2 Finishing cutter 45°
	Kmo-234-3 Finishing cutter 30°
	Kmo-234-4 Expansion pilot $\frac{11}{32}$"

Part Number	Name of Item
	Kmo-234-5 Cutter shank and handle Kmo-234-6 Metal box.
J-129-2	Finishing valve stem guide reamer
J-341	Roughing valve stem guide reamer
KMO-322	Cylinder head bolt socket
J-1523	Feeler gauge set. (Contains 15 individual gauges, ranging from .0015" to .015" x ½ x 8" long.)
KMO-167-D	Eccentric valve seat grinding set consists of the next 4 items and includes -model E. J. Eccentric valve seat grinder 1-valve seat dial gauge. 1-S.P.H. No. 4 pilot. 1-S-2845 grinding wheel (seating stone 45°) 1-S-2870 grinding wheel (seat narrowing stone 70°)
J-1228	Blower rotor gear puller (First Type)
J-1228-41	Special bolts and adapters for J-1228 blower rotor gear puller.
J-1682-C	Rotor blower service tools set (Late type)
J-1471	Blower drive gear flexible coupling spring spreader.
J-1231	Injector tube reamer set (of 2) (consist of J-1231-1-Reamer. J-1231-2-Reamer.)
J-1229	Injector tube flanger and driver.
J-1261-A	Injector body vise jaws with popping tool. (Consist of J-1261 vise jaws only J-1261-1 popping tool only.)
J-1232	Injector tube remover.
J-1291-A	Spray tip driver and injector bushing cleaner.
J-1290	Injector spring lifter.
KMO-240	Injector filter cap wrench.
J-1330	Injector valve lapping block.
KMO-320	Fuel pressure gauge.
J-1687	Cylinder sleeve air port carbon remover.
J-1313	Torque wrench (used on motor)
J-1506	Connecting rod and piston bushing reaming fixture
J-1686	Connecting rod piston pin bushing reaming tool assembly.
J-1508	Fuel pump tool set. Consists of the next 3 items. J-1508-1 Oil seal remover J-1508-2 Oil seal replacer J-1508-3 Rotor shaft installer.
J-1513	Piston pin bushing remover and replacer set, consists of the next 4 items. J-1513-1 Base casting J-1513-2 Driver handle J-1513-3 Driver head J-1513-4 Spacer adopter.
J-1565	Gravity flow test fixture not shown. (With graduated measure) (Used for testing injectors)
J-1641	Valve insert remover.

NOTE: See list of special tools available from Allis-Chalmers for additional special engine tools.

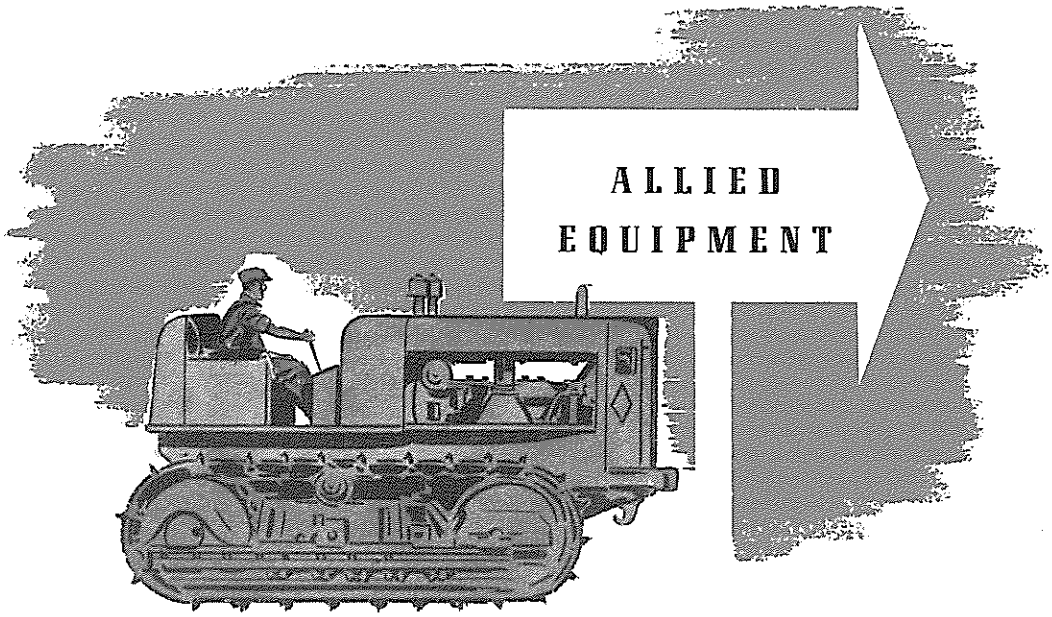

SAFETY:

Do not get on or off a moving machine. Do not take a chance on being injured by someone else starting an engine or tractor without warning.

Allied Equipment for Allis-Chalmers "HD" Series Tractors

Gar Wood Scrapers

Tractor Model	Scrap'r Model	SCRAPERS Type	Capacity (Cu. Yds.) Struck	Capacity (Cu. Yds.) Heaped	Recommended Tire Size Front	Recommended Tire Size Rear	Overall Length	Overall Width	Overall Height	Approx. Wt. With P.C.U. (Lbs.)
HD 7	25	2-Wheel Hydraulic	3.7	5		13.50x20 Single	13' 8¼"	8' 8 "	5' 2 "	4.975
HD 7W & 10	26		4.7	6		13.50x20 Single	14' 6½"	9' 6⅛"	5' 1⅝"	6.900
HD 10W	28		6.4	8		15.00x20 Single	16' 2½"	10' 3 "	5' 6½"	8.525
HD 14	CS10A		10.0	11.0		18.00x24 Single	16' 9 "	11' 9½"	7' 1½"	14.270
HD 10W	S8	4-Wheel Hydraulic	6.5	8	13.50x20 Single	10.50x20 Dual	22' 9 "	9' 0 "	10' 6 "	14.700
HD 10W & 14	L10		8.5	10	13.50x20 Single	13.50x20 Dual	26' 3 "	9' 11 "	10' 6 "	16,500
HD 14	L12		9.5	12	13.50x20 Single	13.50x20 Dual	23' 10 "	11' 0 "	10' 6 "	17,300
HD 14	400		12.0	15	13.50x20 Single	13.50x20 Dual	26' 0 "	11' 0 "	10' 6 "	18,700
HD 14	T20		16.2	20	18.00x24 Single	18.00x24 Dual	30' 4½"	11' 4 "	11' 4 "	26,400
HD 14	515	4-Wheel Cable	12.0	15	18.00x24 Single	18.00x24 Dual	31' 4¾"	11' 5½"	8' 8½"	22,300
HD 14	520		15.8	20	18.00x24 Single	18.00x24 Dual	31' 11½"	11' 5½"	9' 10 "	26,190
HD 14	525		19.3	25	18.00x24 Single	18.00x24 Dual	32' 10½"	11' 5½"	9' 10 "	28,900

Bulldozers and Trailbuilders

GARWOOD

TRACTOR Model	Track Shoes Recommended	Track Shoes Maximum	BULLDOZERS Model	Moldboard Length	Moldboard Height	Angle of Blade	Vertical Adjustment	Lift Above Ground	Weight Lbs.
HD 7	16"	16"	RB	8' 1½"	2' 8 "			36"	4700
HD 7W	16"	18"	RB-D	8' 7½"	2' 8 "			36"	4800
HD 10	18"	18"	RC-D	9' 1¾"	3' 0 "			38"	6900
HD 10W	18"	20"	RC-DX	10' 1¾"	3' 0 "			38"	7100
HD 14	22"	24"	RD-D	10' 2 "	3' 4 "			44"	9000
			TRAILBUILDERS						
HD 7	16"	16"	RB	10' 6¼"	2' 3 "	65°	12"	43"	5300
HD 7W	16"	18"	RB-X	11' 0¼"	2' 3 "	65°	12"	43"	5400
HD 10	18"	18"	RC	11' 7 "	2' 8 "	65°	12"	41½"	7900
HD 10W	18"	20"	RC-X	12' 7 "	2' 8 "	65°	12"	41½"	8100
HD 14	22"	24"	RD	12' 10 "	3' 0 "	65°	12"	49"	9800
BAKER									
			BULLDOZERS (Straight Blade)						
HD 7	16"	16"	323	7' 6 "	3' 7¾"			42⅜"	3500
HD 7W	16"	18"	323A	8' 5 "	3' 7¾"			42⅜"	3625
HD 10	18"	18"	336	9' 3 "	3' 7 "			40"	5795
HD 10W	18"	20"	336A	10' 3 "	3' 7 "			40"	5975
HD 14	22"	24"	315	10' 2½"	3' 10 "			35½"	6600
			BULLDOZERS (Curved Blade)						
HD 7	16"	16"	324	7' 9 "	2' 10 "			42⅜"	3545
HD 7W	16"	18"	324A	8' 8 "	2' 10 "			42⅜"	3650
HD 10	18"	18"	337	9' 6½"	3' 1¾"			40"	5860
HD 10W	18"	20"	337A	10' 6¼"	3' 1¾"			40"	5975
HD 14	22"	24"	319	10' 3 "	3' 6 "			35½"	6650
			TRAILBUILDERS						
HD 7	16"	16"	325	9' 4½"	2' 4 "	65°	12"	42⅜"	3795
HD 7W	16"	18"	325A	10' 4½"	2' 4 "	65°	12"	42⅜"	3840
HD 10	18"	18"	338	11' 1¼"	2' 8½"	65°	12"	44"	6330
HD 10W	18"	20"	338A	12' 2½"	2' 8½"	65°	12"	44"	6370
HD 14	22"	24"	351	12' 4½"	2' 10½"	65°	12"	38"	7020
BUCKEYE									
			BULLDOZERS (Rigid)						
HD 7	16"	16"		6' 10¾"	3' 0 "			50"	2995
HD 7W	16"	18"		8' 0¾"	3' 0 "			50"	3173
HD 10	18"	18"		8' 1⅝"	3' 4 "			60"	5215
HD 10W	18"	20"		9' 3⅝"	3' 4 "			60"	5411
HD 14	22"	24"		9' 3⅝"	3' 4 "			60"	5535

BULLDOZERS (Unitilt)								
HD 7	16"	16"	7' 3 "	3' 0 "			50"	3269
HD 7W	16"	18"	8' 5 "	3' 0 "			50"	3435
HD 10	18"	18"	8' 7 "	3' 4 "			60"	6151
HD 10W	18"	20"	9' 9 "	3' 4 "			60"	6395
HD 14	22"	24"	9' 7 "	3' 4 "			60"	6466
TRAILBUILDERS (Unitilt))								
HD 7	16"	16"	9' 1 "	2' 10 "	55°	12"	50"	3662
HD 7W	16"	18"	10' 4½"	2' 10 "	55°	12"	50"	3856
HD 10	18"	18"	10' 10½"	3' 4 "	55°	12"	60"	6703
HD 10W	18"	20"	12' 2 "	3' 4 "	55°	12"	60"	6968
HD 14	22"	24"	12' 2 "	3' 4 "	55°	12"	60"	7085

Baker "V" Snowplow

SNOWPLOW					
Tractor Model	Model	Width on Ground	Width at Top	Wing Spread	Weight With Wings, Lbs.
HD 7	430	9' 8½"	10' 8½"	19' 7½"	9300
HD 7W	430A	10' 9 "	11' 9 "		9600
HD 10	431	10' 8 "	12' 0 "	20' 7 "	10900
HD 10W	431A	11' 8 "	13' 0 "		11300
HD 14	432	12' 0 "	13' 0 "	23' 6 "	13600

Gar Wood Sheep Foot Rollers

ROLLER							
Tractor Model	Model	No. of Drums	No. Feet Per Drum	Area Each Foot (Sq. In.)	Ground Pressure Lbs. Per. Sq. In. Loaded	Type of Frame	Weight (Empty)
HD 7	WDR 128	2	64	7½	149.13	OSCLTG.	6000
HD 7	WDR 192	2	96	7½	158.60	OSCLTG.	6960
	WDR 224	2	112	7½	163.50	OSCLTG.	7440
HD 10	WTR 192	3	64	7½	150.50	OSCLTG.	9100
HD 10	WTR 288	3	96	7½	160.00	OSCLTG.	10540
HD 14	WTR 336	3	112	7½	164.50	OSCLTG.	11260

Gar Wood Ripper

RIPPER								
Tractor	Model	Overall Length	Overall Width	No. Teeth (Removable)	Center To Center Of Teeth	Max. Penetration	Control	Wgt, Lbs. (Minus Control)
HD 10W or 14	H-80	18' 0"	8' 4"	3	44"	29"	Hydraulic	9100
HD 10W or 14	C-80	18' 0"	8' 4"	3	44"	29"	Cable	8900

Carco Hoists (Pacific Car & Foundry Co.)

HOIST					
Tractor	Model	Drum	Maximum Line Pull Pounds	Main Drum Line Cap.	Weight Pounds
HD 7, 10	FH	Single	24,000 @ 88 f.p.m.	310'—⅞" Cable	1550
HD 10	P	Single	22,400 @ 111 f.p.m.	940'—½" Cable	1725
HD 10	G	Single	36,500 @ 86 f.p.m.	545'—¾" Cable	2350
HD 10	MW	Double	44,700 @ 75 f.p.m.	1375'—¾" Cable	3900
HD 14, 10 or 7	L	Single	7,500 @ 165 f.p.m.	200'—[illegible]" Cable	1150
HD 14	HS	Single	42,100 @ 102 f.p.m.	394'—⅞" Cable	2875
HD 14	HD	Double	45,700 @ 94 f.p.m.	1250'—¾" Cable	4025

Carco Yarders

YARDERS							
Tractor	Model	Width Over Wheels	Width Between Reach Hubs	Overall Height	Fair Lead Roller Behind Axle	Capacity of Track Wheels	Weight Lbs.
HD 7	Junior	8' 7 "	4' 5 "	9' 0 "	8" back to 8" forward	6 tons	4700
HD 10	Small	9' 6 "	5' 5 "	9' 11 "	15" to 0 "	15 tons	7400
HD 14	Medium	10' 8½"	5' 7 "	13' 5 "	38" to 8½"	20 tons	11100
HD 14	Redwood Spc.	11' 4 "	6' 1½"	13' 1½"	36" to 5 "	20 tons	11950

128 -- Gar Wood Scrapers, Bulldozers and Roadbuilders

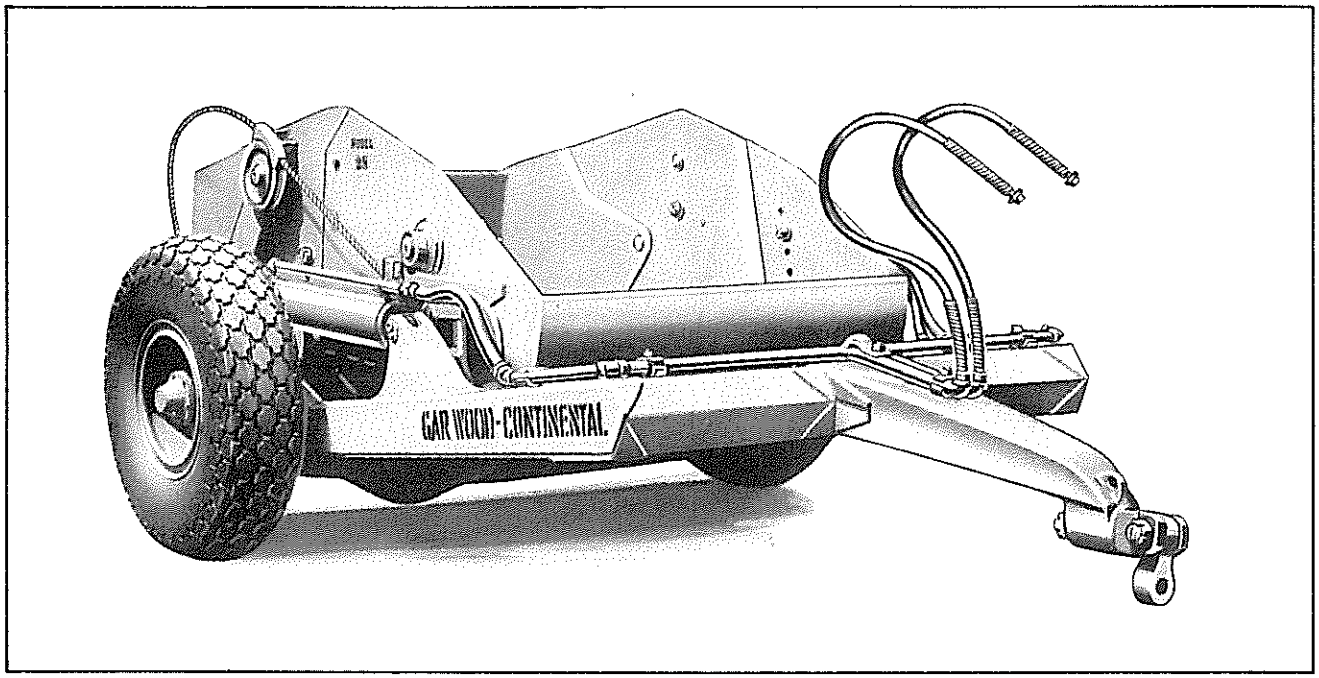

FIG. 1

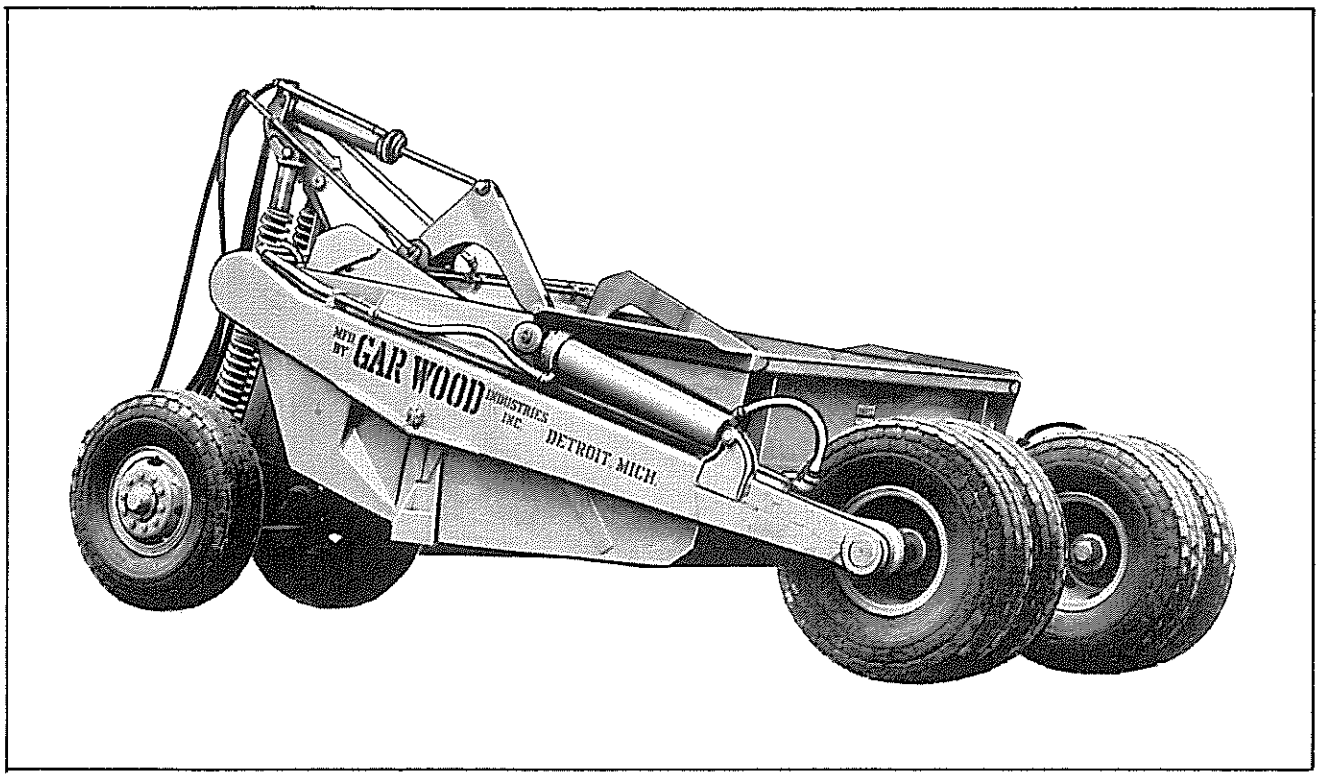

FIG. 1 A

A-SCRAPERS.

The type of scraper used on most of the construction work under progress at the present time is referred to as a four-wheel scraper. This is true, in spite of the fact that the rear wheels may cary dual tires.

Among the four-wheel scrapers, there are two general types, cable operated and hydraulic operated. In this case, too, both have their advantages and disadvantages, and it is largely the conditions under which the machines are to work that determines which is to be chosen. Also, our personal experience of the contractor is a great factor, and his choice may be

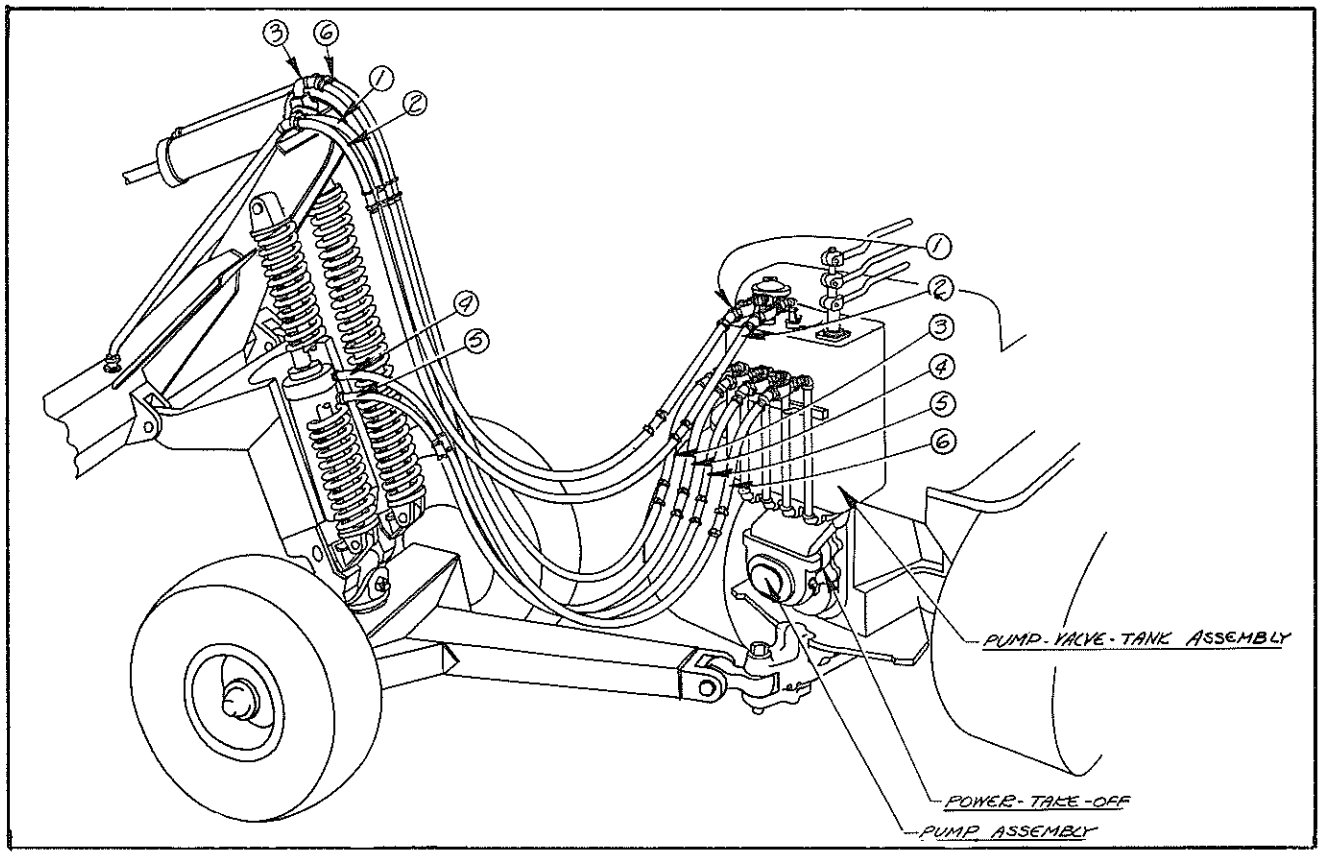

FIG. 2

determined merely by his familiarity with one type or the other.

Of the four-wheel scrapers, there are two general types as regards method of ejection of material. These may be classified as the sliding gate type, and the roll-over type. They are also referred to as "positive ejection" and "combination gravity and positive ejection" types of scrapers. In one case the material is forced out by a gate being drawn forward merely sliding all the material over the floor and out of the mouth at the front. In the other case, the entire material is rotated about in pivot point until the bowl is nearly inverted so that the material is removed by a combination of force and gravity.

The scrapers found behind Allis-Chalmers tractors will generally be found to be of the gravity ejection type. Following are operating instructions as prepared by the manufacturers of equipment generally sold with Allis-Chalmers tractors.

INSTALLATION (Two and Four Wheel)

After unloading scraper, back tractor into position in front of scraper. Install Gar Wood power take-off on tractor in accordance with the power take-off drawing in parts book.

Bolt pump-valve assembly to power take-off assembly with the hose ports to the rear. After installing the pipe fittings and shut-off cocks as shown on the pump-valve-tank assembly drawing, connect the high pressure hose between the scraper and the pump-valve-tank assembly so they are in a position parallel to one another. The oil tank and power take-off assembly should then be filled with the correct lubricant in accordance with the instructions given under the caption LUBRICATION, now the hydraulic power can be used to raise the tongue of the scraper for connecting to the tractor drawbar.

The tractor drawbar pin should be secured from working out by inserting a cotter key or bolt. The safety cable connecting the scraper tongue to tractor should immediately be attached to prevent damaging the hose or pump-drawbar or other drawbar parts.

IMPORTANT! Remove the small shipping bolt from bowl and apron hinge holes before working scraper as this bolt is only used to prevent the bowl from dropping down in the digging position when shipping or transporting the scraper with the hydraulic system disconnected.

The scraper is now ready for operation.

B-TWO WHEEL HYDRAULIC.

OPERATING INSTRUCTIONS

All working operations of the scraper are controlled by one lever located on top of the pump-valve-tank assembly within convenient reach of the operator. The "to you" position of the control lever raises the bowl and the "from you" position lowers the bowl. The con-

trol lever is also actuated by a valve centering spring in the valve inside of the oil tank which automatically causes the control valve to return to neutral position when the hand is removed.

IMPORTANT! Never hold the control levers in raised or lowering position at any time after the bowl has been raised to its fullest extent or powered down to its full drop, as this will cause oil to be forced through the relief valve at high pressures which will overheat the pump and may result in its destruction, as well as damage to other parts of the hydraulic system.

Loading—In scooping up the load, the operator should adjust the depth of the cut by repeated quick and full strokes of the control lever rather than slow long movements. These quick movements of the control lever enables the average operator to maintain a more accurate control over the cut being made. The operator should practice keeping the cut and the grade smooth and level. He may find this difficult at first, but with practice over a period of time he will become proficient in maintaining a smooth cut and will learn to get full capacity loads each trip.

Dumping—For dumping sticky soil, the scraper bowl can be shaken by quickly and repeatedly shifting the control lever to the "to you" and "from you" positions. Dumped loads can be leveled off and the fill can be kept smooth by using the rear hinge axle of the scraper for striking off the previously dumped load. We recommend on the average road fill that the load be dumped in windrows and by straddling the previous dumped load this windrow will be leveled off. The return trip may be utilized to level the grade and fill with the bowl cutting edge. We might mention that various ways of accomplishing this leveling can be worked out with either the loaded or empty scraper.

REAR GATE ADJUSTMENT (Two Wheel Only)

The opening and closing of the rear dump gate is automatically controlled by the gate cable when the bowl is raise to and lowered from its dumping position. It is important that the gate cable be adjusted to the proper length to obtain the maximum gate opening particularly in rocky and gummy soil conditions. IMPORTANT! With the bowl in its extreme dump position, the cable adjustment should allow an additional inch or two gate travel before it has reached its extreme open position.

APRON ADJUSTMENT (Two Wheel Only)

The apron is automatically opened and closed by the working action of the bowl in its carrying and digging positions and can be adjusted to provide a large or small opening between the bowl and apron cutting edges. Two pair of hinge holes in the side plates of the bowl and the apron provide an adjustable means of selecting the desirable opening to suit the various types of soil. The apron rollers are adjustable up or down by means of holes in the a pron side plates which also increase or decrease the opening of the apron when the bowl is in a digging position. The proper setting of the bowl and apron hinge holes and the apron rollers is important towards obtaining full yardage and the proper working efficiency. The bottom hinge holes and the center roller holes are generally used for average hard soil. Top hinge holes and lower roller holes allow for a larger bowl opening to scoop up loose, sandy, muddy soil, or soil containing a large portion of top grass, weeds, roots, etc. However, because of the wide variation of the soil, we strongly recommend that the tractor operator try out the various hinge holes and apron roller adjustments until he finds the proper combination of these adjustments for the largest capacity load, with the available tractor power in the particular type of soil he is then working.

ORDERING PARTS (Two and Four Wheel)

When ordering parts, always give SERIAL NUMBER OF SCRAPER and model of tractor used. Always order by part number and name. However, where this is not possible, give a comprehensive description of the part wanted, or supply a pencil sketch of same. When ordering hose, ALWAYS GIVE THE REQUIRED OVERALL LENGTH INCLUDING COUPLINGS OF EACH PIECE WANTED, AND STATE WHETHER PLAIN, WIRE WRAPPED AT EACH END, OR FULLY WIRE WRAPPED, SHOULD BE FURNISHED.

Periodically there are minor changes made on certain parts which may not be covered by the parts book you have, therefore, if you fail to give the serial number when ordering parts, we cannot assume the responsibility of supplying the correct parts.

C-FOUR WHEEL HYDRAULIC.

All working operations of the scraper are controlled by the three levers located on the top of the pump-valve-tank assembly within convenient reach of the operator.

The control lever nearest operator controls the master hoist. Movement of this lever "toward operator" raises the scraper and the "from operator" position lowers scraper. The center control lever operates the action of the gate hoist. Its movement "toward operator" opens gate and its movement "from operator" closes gate. The control lever at the operators extreme right operates the bowl hoist. Its movement "toward operator" lowers bowl to its dig position and when moved "from operator" raises bowl to dump position. The control levers are actuated by a valve centering spring in the valve inside of the oil tank which

automatically causes the control valve to return to neutral position when the hand is removed.

IMPORTANT! Never hold the control lever in raised or lowering position at any time after either the master, gate or bowl hoists have been raised to their fullest extent or powered down to their fullest drop, as this will cause oil to be forced thru the relief valve at high pressures which will overheat the pump and may result in its destruction, as well as damage to other parts of the hydraulic system.

Loading—In scooping up the load the operator should adjust the depth of the cut by repeated quick and full strokes of the master hoist control lever rather than slow long movements. These quick movements of the control lever enables the average operator to maintain a more accurate control over the cut so that the grade will remain smooth and level and will not retard the travel of earth moving equipment. The depth of cut depends largely on the soil conditions and available drawbar pull of tractor. In rocky heavy soil, a shallow cut will result in better loading speed, while in sandy and light clay soil, the depth of cut can be increased without sacrificing loading time.

Dumping—After the dirt has been conveyed to the fill, the operator can regulate the depth of the spread by lowering or raising the master jack before or during the dumping operation of the bowl. The inexperienced operator may have some difficulty at first in maintaining a smooth level cut; obtaining maximum loads within a given time; and maintaining an even spread of dirt on the fill, but with practice over a short period of time, he will become proficient in the movement of larger yardage at a minimum maintenance and operating cost.

LUBRICATION (Two and Four Wheel)

When filling the hydraulic system, pour 5 or 7 gallons (10 or 12 for four wheel scrapers) of oil in the tank, then engage power take-off and start tractor to turn pump over SLOWLY, operating the control lever back and forth to force oil into the hoist assemblies and hose line. Keep adding oil to the tank as necessary, and when jack assemblies, pipes, and hose are full, maintain oil at level of petcock in the side of tank. Use any good grade of motor oil in the following viscosities with the corresponding temperature range:

Below 40° Fahrenheit	S.A.E. 10
40° to 80° Fahrenheit	S.A.E. 20
Above 80° Fahrenheit	S.A.E. 30

CAUTION! When oil in hydraulic system is cold, never speed up motor until oil warms up slightly and will flow freely. Oil must be clean and free from foreign matter. If for any reason foreign particles are admitted into the system and hydraulic parts are destroyed, do not fail to flush out the entire system including the oil storage tank before placing the equipment in operation with new parts.

Fill the power take-off housing to the filler plug level with a good grade of transmission oil; preferably S.A.E. #160 during summer temperatures and S.A.E. #90 to meet winter conditions.

High pressure grease fittings provided in the hoist assembly pins, apron roller shaft, bowl trunion bolt, and all other pivot points comprise the points of lubrication on the scraper itself. Use tractor grease and make certain that grease is forced out of the bearings at each greasing in order to keep dirt out of the bearings. Before leaving the factory, the wheel bearings are filled with a standard grade of semi-fluid grease which provides adequate lubrication over several months. However, the wheels should be checked every 100 hours to see if they are lubricated adequately and also inspect and adjust the wheel bearings to compensate for any wear which may have occurred.

D-CABLE CONTROLLED SCRAPERS.

INSTALLATION

After unloading scraper, back tractor into position in front of a hoist or chain block. Install the Gar Wood cable control unit on tractor in accordance with the instructions and drawing in cable control unit parts book. Then back tractor in front of scraper. Connect the tongue of scraper to drawbar of tractor. The drawbar pin of the tractor should be secured with a bolt or cotter pin to prevent it from working out. Thread the cables leading from the scraper through the cable control unit according to instructions covering the unit. Make certain that cables are not CROSSING or TOUCHING EACH OTHER. It is important to remove temporary shipping strut before proceeding to operate scraper. The scraper is now ready for operation.

OPERATING INSTRUCTIONS

The two conveniently located levers of the Gar Wood cable control unit are used to operate the scraper.

The lever on the operator's RIGHT (when looking from rear toward front of tractor) is the lift control lever. (See cable control unit parts drawing.) The "to you" position of this lever raises the cutting edge and the "from you" position lowers the cutting edge, to accurately control depth of cut or grade.

The lever on the operator's LEFT is the bowl and apron control lever. The "from you" position of this lever raises the apron and the bowl to discharge the dirt loads. The "to you" position releases the brake allowing the apron and bowl to be lowered to loading position again. These controls are actuated by centering springs which automatically cause them to return to their neutral positions.

For care and operating instructions of Gar

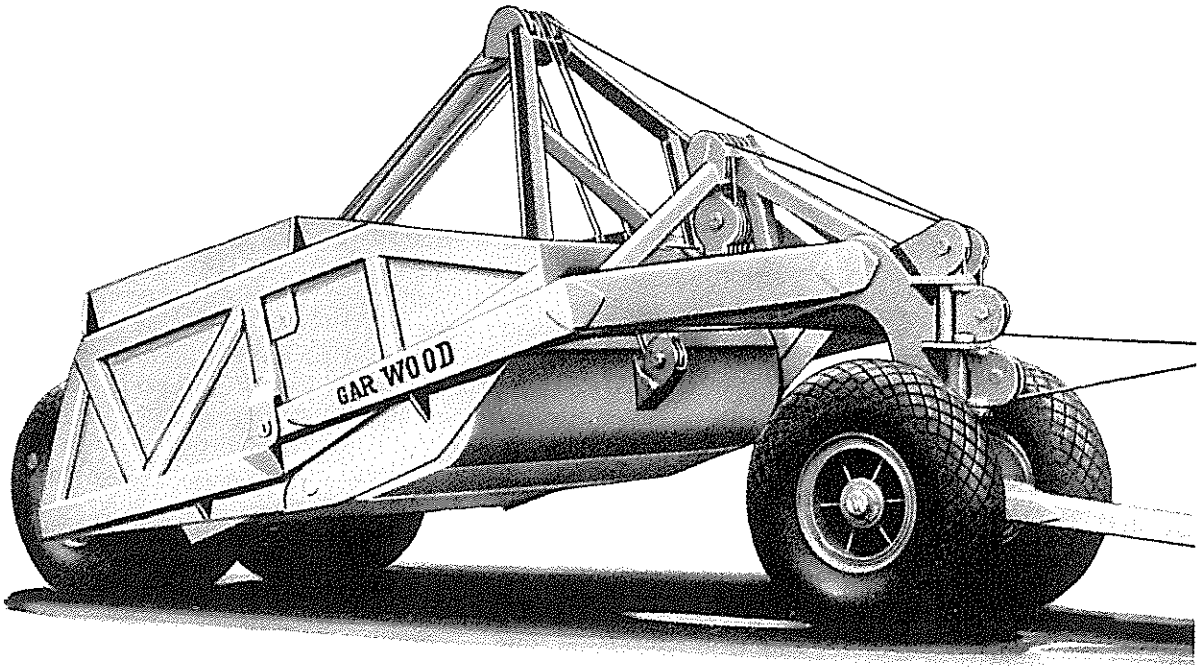

FIG. 2A

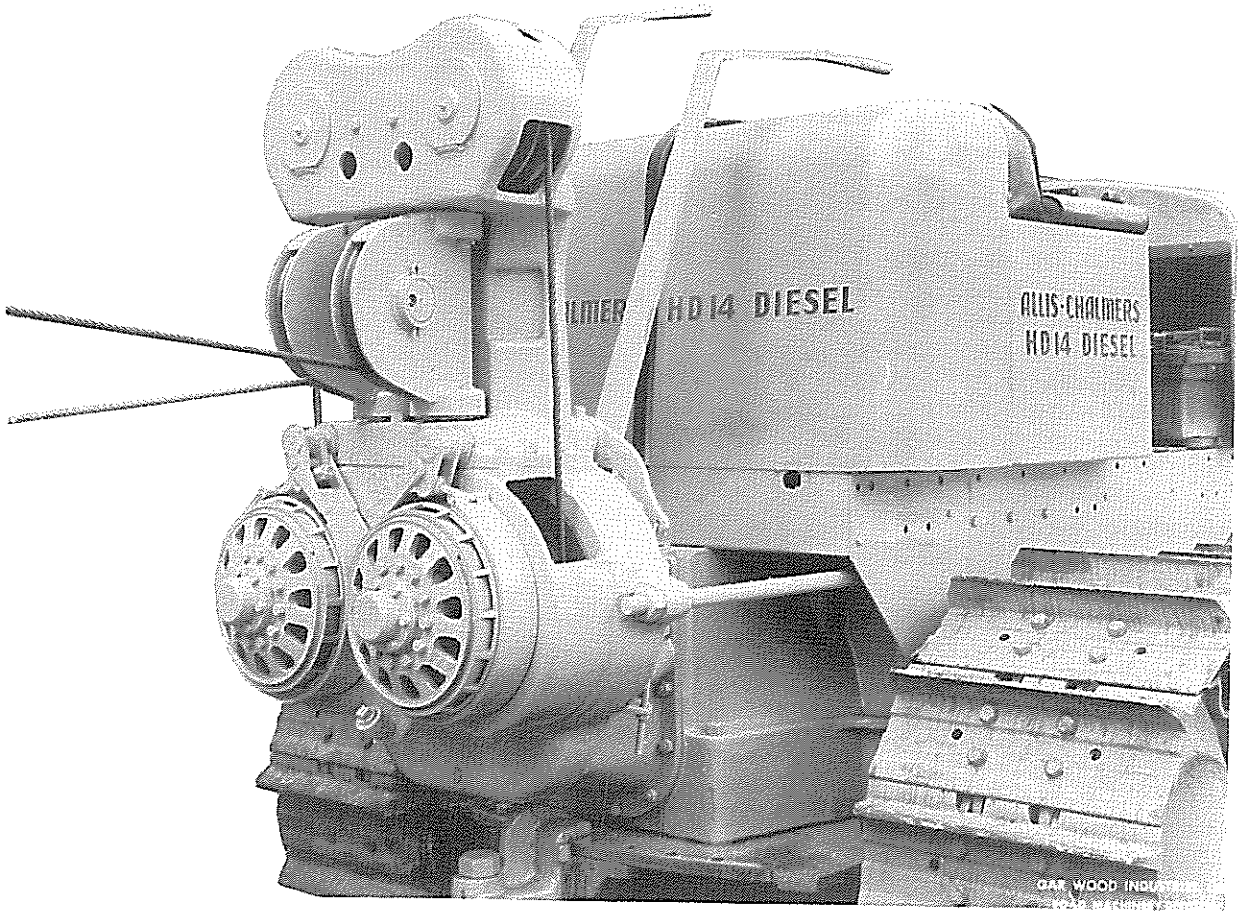

FIG. 2B

Wood cable control unit, read the parts book instructions of the unit thoroughly.

Loading—In scraping up a load, the operator should adjust the depth of cut by repeated quick but positive strokes of the lift control lever. The apron should be CARRIED AS LOW as practicable to facilitate the "boiling action" of the dirt loading onto the apron. At the end of the loading operation, ALLOW the apron to FLOAT DOWN while lifting scraper to hauling position. This is done by simultaneously holding both control levers in a "to you" position. CAUTION! Do not bring lift sheave blocks together, especially when turning or traversing uneven ground. Allow a FEW INCHES clearance to accommodate PLAY between TRACTOR and SCRAPER.

Dumping—When entering fill, adjust depth of spread by raising or lowering the cutting edge and then proceed to throw apron control lever in "from you" position to first raise the apron and then the bowl to discharge dirt. Depending on the type of soil and the depth of spread, ALLOW sufficient time for dirt to be discharged; that is, raise the bowl with several pauses in the dumping cycle. CAUTION! DO NOT allow apron and bowl SHEAVE BLOCKS to remain TIGHT against the STOPS at any time. Slack off cable immediately after bumping bowl against the stops. While returning to the cut, allow bowl to be pulled back into its loading position by moving apron control lever in the "to you" position. After bowl is completely down, raise apron up about 18° to prepare for the next scraping or loading position.

Life of the cables depends materially on the operator; CABLE LIFE CAN BE GREATLY EXTENDED by observing the FOLLOWING RULES:

1. Avoid kinking cable. Spool cable evenly on drum to avoid criss-crossing.
2. Never allow cable to become slack on drums. Slack cables cause fouling and criss-crossing.
3. Avoid putting surplus cable on drum. The dead end on the scraper is the proper place for reserve or surplus cable.
4. Distribute wear point on cable by pulling through and cutting off a few feet occasionally.
5. Never allow sheave blocks to remain together at any time, especially when turning or traversing uneven ground.
6. Avoid operating scraper when making an extremely sharp turn.

LUBRICATION

The sheaves and pins are provided with high pressure alemite grease fittings to independently grease each sheave bearing as well as all fifth-wheel, and sheave block pins. Use good grade of tractor grease, and make certain that grease is forced out at each greasing to keep dirt from entering the bearings.

The wheels are equipped with button-head alemite fittings. Use good grade of track roller or transmission grease. Maintain level approximately half full and check by removing alemite fitting occasionally. CAUTION! Greasing excessively will cause oil seals to leak.

The fifth-wheel swivel is provided with a button-head alemite fitting to grease bushings in fifth-wheel. Use track roller or transmission grease and maintain level to grease fitting.

Cable lubricant is highly recommended to insure long life of cables and sheaves.

BEARING ADJUSTMENTS

The rear wheel bearings are provided with shims for the adjustment of the tapered bearings. Fig. 3. These shims are .0010" thick.

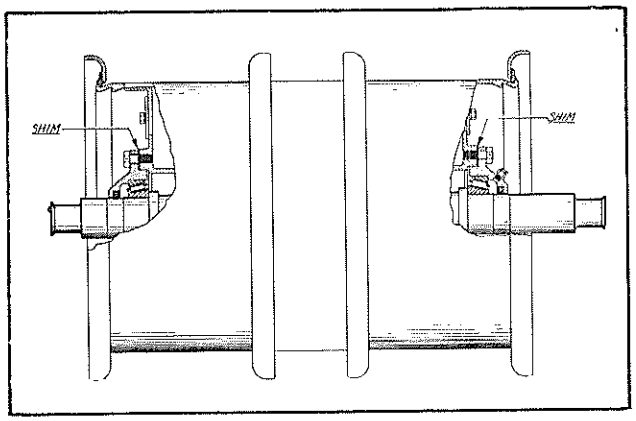

FIG. 3

When bearings are properly adjusted, the total clearance should be .015" to .025". If, after drawing up bearing CAPS TIGHT, the axle can be moved axially LESS than .015" (approximately 1/64") then remove one of the caps and ADD ONE shim. If the axial movement of the axle is MORE than .025", then TAKE OUT ONE shim. CAUTION! Be sure to use lock washers and draw cap-screws up tight, and wire heads.

The front wheel bearings are provided with nuts for the adjustment of the front wheels. Fig. 4. Adjust these bearings in the usual man-

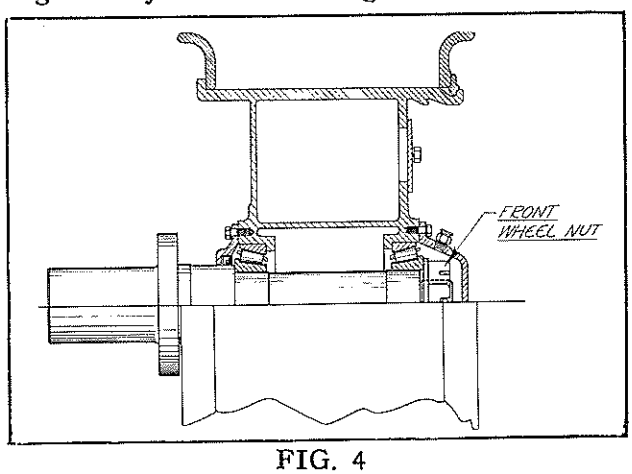

FIG. 4

ner by running nut up tight and then backing it off ¼ of a turn. Secure nut with cotter pin.

The fairlead sheave block bearings are provided with shims for the adjustment of the fairlead sheave blocks. These shims are placed between the pin and the bracket. Here, the correct number of shims must be determined by trail and error. When the fairlead sheave block is correctly adjusted, there should be just a SLIGHT DRAG when moving the block by hand. NOTE! Do NOT place shims between upper pin and bracket. Make certain that the top and bottom washers project inside of the fairlead block bearing housings at least $\frac{1}{16}$", and that they REMAIN STATIONARY when sheave block is turned.

REPLACEMENT OF PARTS

The cable sheaves and bearings are standard throughout the scraper. The pins, however, vary in length, according to the number of sheaves in the sheave block. To replace sheave or bearing, remove the cotter pin and push out sheave pin.

The fifth-wheel bushings and the wear plate are used to support the fifth-wheel swivel. Fig. 5. This assembly is held in position by means

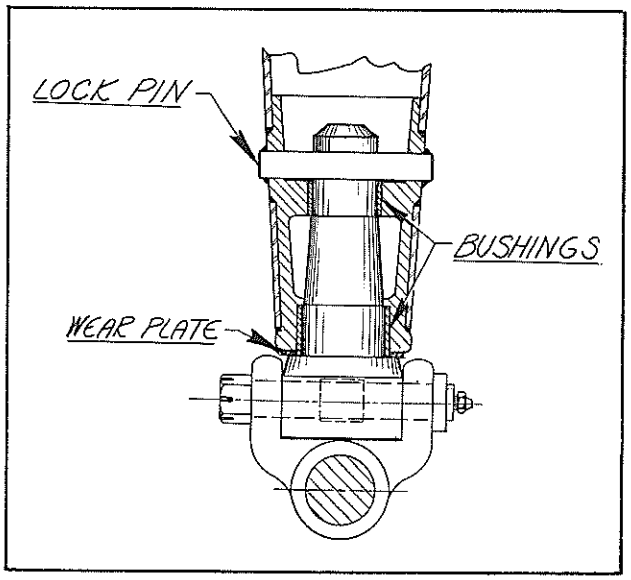

FIG. 5

of a square bar which is welded on both ends to the fifth-wheel housing casting. These parts usually have an extremely long life, but should replacement be necessary, the square bar must be burned loose and driven out to allow swivel to be taken out.

The cutting edge is of the reversible type. When cutting edge is worn to the point where it is wearing into the cutting edge base, it should be REVERSED. Make certain that the bevel is on the UNDERNEATH SIDE of the cutting edge when installing.

THREADING CABLE

Lift cable. See scraper parts drawing for instruction to thread the lift cable. Means are provided to place a reserve lift cable spool on the yoke of the scraper. When using reserve cable, thread cable through in reverse order and after the required length is pulled through, the dead end wedge should be set. Take care in setting wedge so that cable is not damaged. Damaging cable may mean loss of many feet later on.

Bowl and apron cable. See scraper parts drawing for instructions to thread the bowl and apron cable. Means are provided for, and the scraper is equipped with, a reserve cable spool on the rear bumper of the scraper. When using reserve cable, thread the cable through in the reverse order and after the required length is pulled through, the dead end wedge should be set. Take care not to damage cable when setting wedge.

Return cable. See scraper parts drawing for instructions to thread the return cable. SUPPLEMENTING these instructions, it is IMPORTANT that the threading be done when the apron and bowl are FULLY DOWN or closed, and that the return cable is JUST TAUT after wedges are set.

CABLE SPECIFICATIONS

	Model 515	Model 520	Model 525
Lift	100′	120′	120′
Bowl	100′	120′	120′
Return	24′	27′	28½

The use of the best grade of ½" (6x19) Long lay preformed wire rope is recommended and is used on the three models for lift, bowl, and return. RESERVE CABLE OPERATION is highly RECOMMENDED for both the LIFT and BOWL cables to obtain the most EFFICIENT and economical utilization of scraper cables.

ORDERING PARTS

When ordering parts, always give the model and serial number of the Gar Wood cable controlled scraper. Always order part by number and by name. The power control unit bears a separate serial number which should be given when ordering parts.

INSTALLATION

Install the Gar Wood Cable Control unit on the tractor in accordance with the drawing presented in the parts book. Make certain that all studs are run down tight and that all nuts are drawn up securely. Check all gear case capscrews, particularly after the first few hours of operation. Make certain that the gear case is filled with transmission lubricant as per the subsequent Lubrication Instructions before STARTING to operate the unit.

LUBRICATION

Put a good grade of tractor transmission lubricant (S.A.E. #90 transmission oil) in filler plug and always maintain lubricant to that level. Lubrication of all of the internal parts of the Gar Wood cable control unit is automatically provided for by the gear case lubricant.

Grease sheave bearings at the alemite pressure gun fittings with a good grade of grease every eight hours. Make certain that grease is forced out to keep dirt from entering the bearings.

Remove the 1/8" pipe plugs on the brake shaft housing and temporarily replace with an alemite fitting to pack the brake shaft bearings with grease every thirty days. Take care to avoid getting excess lubricant on the brake drum, because it is injurious to the brake lining.

Flushing out of the cone clutch lining with fuel oil occasionally is recommended to avoid stickiness and contributes to its long life.

The use of cable lubricant on the operating cables is highly recommended to insure long life of the cables and sheaves.

BRAKE ADJUSTMENTS

There are three points of adjustment for the brake system of the Gar Wood cable control unit. The first thing to consider in getting the brake properly adjusted is the proper relation of the cam lever to the brake lever shaft and the roller on the control lever.

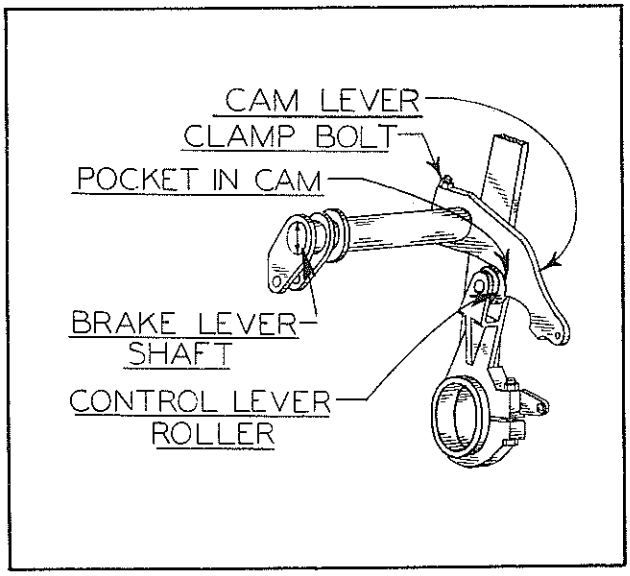

FIG. 6

Fig. 6 illustrates this proper relation of roller, cam, and brake lever shaft. With the arrow on the brake end of the lever shaft STRAIGHT UP AND DOWN or in a vertical position, the cam lever should be rotated about the shaft until the control lever roller is just CONTACTING the cam in the region of the POCKET above the next to the holding notch. When this condition is obtained, the clamp bolt should then be tightened securely to prevent the lever cam from slipping on the shaft. This completes the first adjustment. Then the brake spring should be extended a little with the adjusting bolt.

Fig. 7 illustrates the brake system for the drum which rotates clockwise (looking towards rear of unit and tractor) when winding in cable. The control lever should then be moved so that

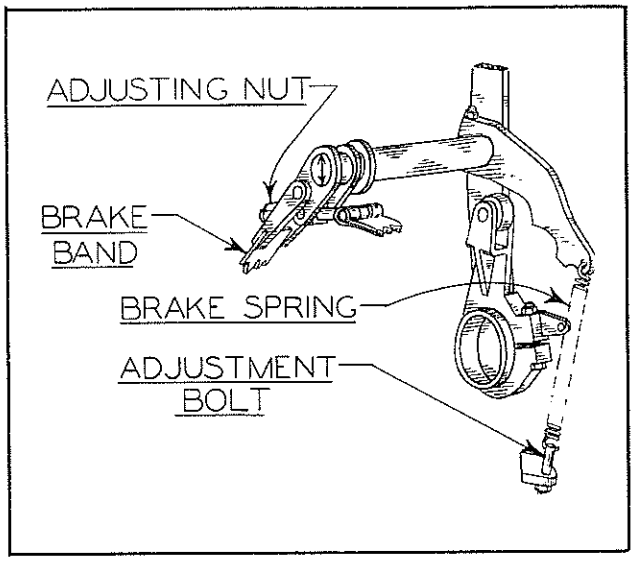

FIG. 7

the roller IS NOT contacting the cam. If the arrow on the lever shaft is no longer straight up and down, then the brake band adjusting nut must be tightened if the arrow has rotated clockwise; and conversely loosened, if the arrow has rotated counterclockwise from the neutral position.

Note that the rotation of the arrow from its correct vertical position will be just the reverse when the opposite rotation of drum is considered; i. e., when the drum rotates counterclockwise when winding in cable. It must be borne in mind that the brake spring should be extended a little, while making this second adjustment in order to cause the brake band to closely conform and be tight on the drum. When the arrow on the lever shaft is brought back to a vertical position, then the second adjustment is completed.

From this point on, the magnitude of the cable loads to be handled is IMPORTANT. The brake spring regulates the holding force of the brake band. Consequently, in order to keep the drag of the band down to a minimum, the brake spring adjusting bolt should be tightened JUST ENOUGH to hold the cable loads consistent with good operation. This completes the third and last adjustment of the brake system.

To compensate for wear of the brake band, usually the brake band adjusting nut need only be tightened.

CLUTCH ADJUSTMENT

With the brake properly adjusted, the control lever will be in its neutral position when the roller is just touching the lever cam. The control lever is held in this position by the lever spring. In order to adjust the clutch, the clamp bolt on the control lever should be loosened so that the control lever is free to turn on the screw shaft seal retainer.

See Fig. 8. The control lever should be moved in the direction to engage the clutch so

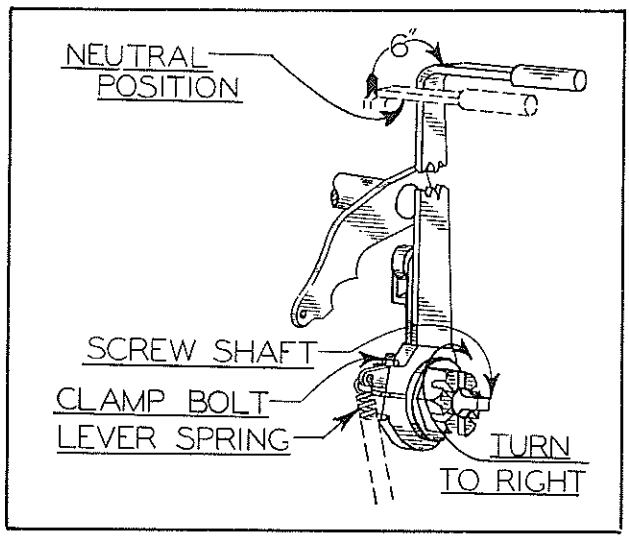

FIG. 8

that the end of handle has moved approximately 6" from its neutral position. While holding the control lever in this displaced position, the screw shaft should be rotated until the clutch cone is tight in the drum. Then clamp the control lever securely by tightening the clamp bolt and allow lever to return to its neutral position. CAUTION! Make certain that the clutch is not dragging when control lever is in its neutral position.

As the cone clutch facings wear, it will be necessary to occasionally repeat the process described above.

DRUM BEARING ADJUSTMENT

Adjustment of the tapered bearings on the cable drum is provided for by shims. These shims are .008" thick (two shims make 1/64" thickness.) The proper procedure in adjusting these bearings is to take the bearing retainer without any shims and draw it up EVENLY with 4 cap-screws. At the point when the bearings are tight (when there is considerable drag on the drum when turned by hand) the gap between the retainer and the drum support should be measured with a "feeler gauge." Then take a number of shims to equal the thickness of the "feeler gauge" measurement and add one more for bearing clearance. Place these shims between the retainer and the drum support and bring up all 8 capscrews tight. Check to see that there is just a SLIGHT DRAG when rotating the drum by hand and then wire the heads of the capscrews.

DRIVING GEAR ADJUSTMENT

A procedure of adjustment similar to that explained above is used to adjust the tapered bearings supporting the driving gears. In this case, shims are used and the screw shaft nut also serves the purpose of the bearing retainer. The shims are made of the same shim stock (.008" thick). Here it is necessary to measure the gap between the screw shaft nut and the gear case after pulling up the screw shaft nut evenly with 4 capscrews to the point where the capscrews are JUST TIGHT. Be sure that the cups of the bearings are not sticking in the gear case. It is recommended that the 4 capscrews be drawn up about all they will stand and then after backing off completely, bring them up again to the point where they are JUST TIGHT. Then measure the gap with a "feeler gauge." Take the required number of shims PLUS ONE and place them behind the screw shaft nut and bring up all 8 capscrews EVENLY and TIGHT. CAUTION! It is important that extreme care be used in making these shim adjustments, because if gear adjustments are being made while the Gar Wood cable control unit is installed on the back of tractor, it is impossible to check the correctness of the adjustment. If the power take off is accessible, it is well to make certain that the shaft or gear can be rotated by hand to check that the bearings are not binding.

ADJUSTMENT OF FAIRLEAD SHEAVE BLOCKS

Shims are provided for the adjustment of the fairlead sheave blocks. These shims are placed between the pin and the housing. Here the correct number of shims must be determined by trial and error. When the fairlead sheave block is correctly adjusted, there should be just a SLIGHT DRAG when moving the block by hand. NOTE! DO NOT place shims between upper pin and housing. Make certain that the top and bottom washers project inside of the fairlead block bearing housings at least $\frac{1}{16}$", and that they remain stationary when sheave block is turned.

REPLACEMENT OF PARTS

All major parts of the Gar Wood cable control unit that are subject to wear and replacement are readily accessible and can be replaced with a minimum of effort and lost time.

1. Cone Clutch—To replace the cone clutch, it is necessary to remove only 12 capscrews without disturbing any other part of the Gar Wood cable control unit.
2. Brake Band—The brake band should be replaced when the brass rivets begin to protrude through the lining into the drum and cause scoring. To replace the band, all that is necessary to remove is the pin and unscrew the adjusting nut.
3. Drum Oil Seals and Clutch Centering Bushings—To replace the oil seals, the best procedure to follow is to first remove the spline cap and castellated nut. Then pull cone clutch and drive spline assembly out of the unit. This makes all parts holding the oil seals readily accessible. Then by removing the oil seal retainer, a new oil seal can be easily installed. IMPORTANT! When replacing oil seal or otherwise removing retainer, it is well to check the wear of the

cone clutch centering. This bushing maintains concentricity of the cone clutch and drum, also of the oil seal about the drive spline. If this bushing wears too much, the cone clutch will consequently be allowed to drop down to an eccentric position, and the oil seal will be subject to eccentric movement. Therefore, it is essential that this bushing be checked periodically for looseness by trying to detect vertical and horizontal play in the cone assembly when the clutch facing is not touching the drum. Replace this bushing in retainer if necessary. To replace oil seal, it is necessary to remove bearing retainer and pull off drum.

The above outlined procedure makes it possible to make all these replacements entirely from the rear without removing the Gar Wood cable control unit from the back of the tractor.

THREADING OF CABLE

To thread the double drum Gar Wood cable control unit, take the end of the cable coming from the scraper or other tractor tool and push it in through the bottom of the fairlead block. When it protrudes through the top pin, direct it between the sliding sheave groove and the guard stud. Continue to push it around the sliding sheave until it can be directed to the drum. Push the cable in that end of the hole in the drum which will subject the cable to a very sharp bend when the cable starts to wind on the drum. See Fig. 9. Push in an amount

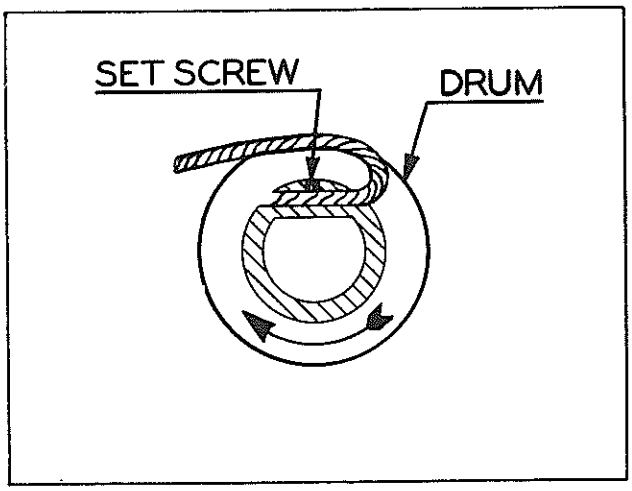

FIG. 9

sufficient to come flush with the opposite end of the hole and then tighten set screw with end of wrench.

OPERATING HINTS

Refer to "Cable Operated Scrapers."

ORDERING PARTS

When ordering parts, always give the model and serial number of the Gar Wood cable control unit. Always order part by number and by name. However, where this is not possible, give a comprehensive description of the part wanted, or supply a pencil sketch of same. Gar Wood Industries, Inc., reserves the right to change design and specifications at any time and accordingly cannot assume the responsibility of supplying the correct parts which may not be covered in parts books previously supplied.

E-BULLDOZERS AND ROADBUILDERS.

There are two distinct classes of bulldozers, namely, the straight or regular type bulldozer, and the angle blade bulldozer, the latter being distinguished in the fact that the blade can be set at an angle in a horizontal plane as well as in a vertical plane.

There are several types of blades in the regular bulldozer, these being divided into two general classes; namely, straight and curved. The straight blade is used for most work, that is, general land clearing and moving of dirt, and the curved blade is applicable particularly to excavation work.

Bulldozer blades are sometimes equipped with teeth, with the lower portion curved forward to provide a lifting leverage, these teeth being built integral in assembly with the blade or applied as a gang, or as individual teeth being detachable when not required.

Bulldozer blades are sometimes provided with a flat reinforced plate in the middle which may be used to facilitate pushing a scraper to help it load.

The angle type blade is seldom equipped with these special features, partly owing to the fact that it is not intended for such extremely heavy work, and also owing to its already increased weight ahead of the front idlers. Any amount of additional weight on an angle type blade would tend to seriously unbalance the unit.

Both types of blades are sometimes equipped with side bits to facilitate cutting off roots or cutting hard soil or soft rock formations which may be encountered at the end of the blade.

Practically all blades are now provided with cutting edges which are reversible so that when the cutting edge is worn out it may be reversed to provide a new edge.

The blade of the angle type dozers, also sometimes referred to as gradebuilder, roadbuilder or trailbuilder, can be swung from a horizontal approximately 6 inches at each end, and about 25° to 30° from a line perpendicular to the axis of the tractor in a horizontal plane.

The factors determining a choice between a bulldozer and an angle dozer are the uses to which it is to be applied, the initial cost and sometimes the overall width of the dozer which may have to be held to a minimum to comply with State Traffic Regulations for transport. However, the principal factor in determining whether a straight bulldozer or an angle dozer should be purchased is whether or not any

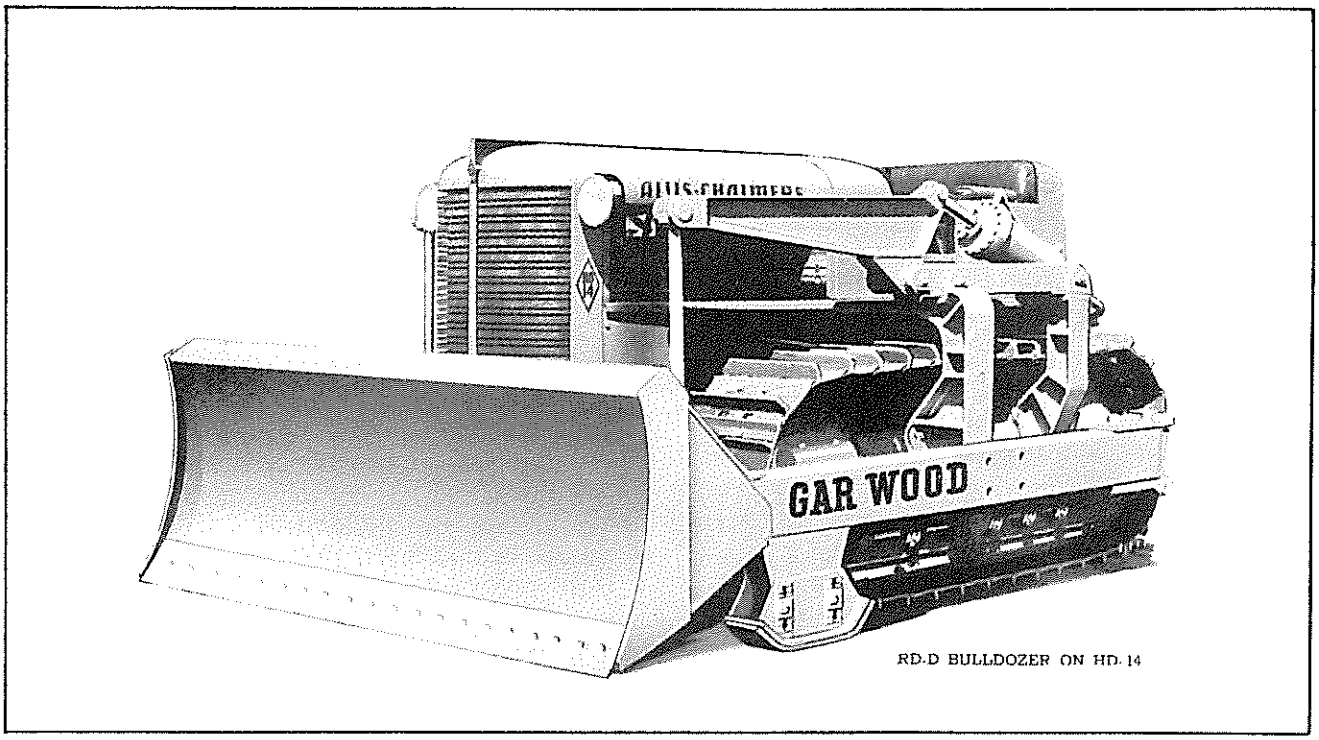

FIG. 9 A

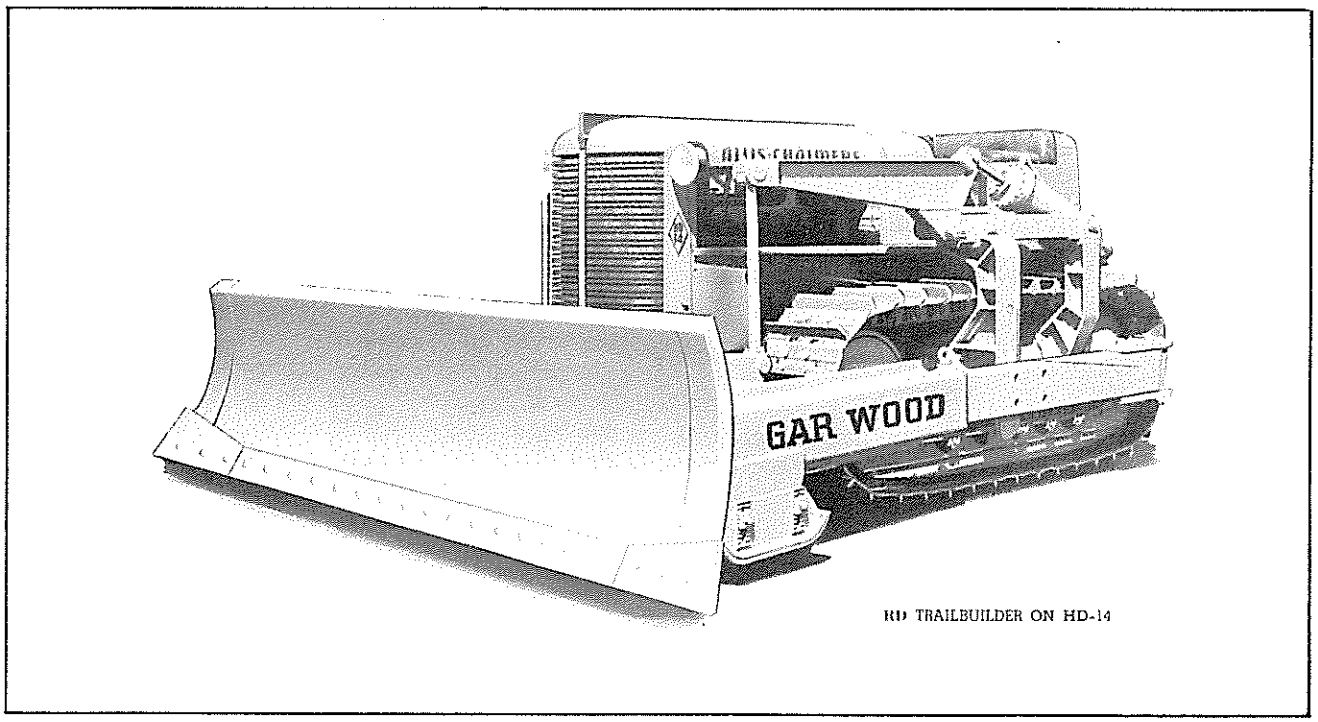

FIG. 9 B

great amount of the working time will be spent in building roads on side hills or "pioneer" roads. It is for this purpose that the angle dozer is particularly designed and best suited.

It may be well remembered, too, that an angle dozer by nature of its design has a much wider blade, and other things being equal, requires proportionately more power to operate. For this reason it is always advisable to choose a standard gauge tractor in preference to a wide gauge model to prevent overloading.

The majority of bulldozers built today are of the so-called track-mounted type, the lifting mechanism of which is mounted on brackets attached to the track frames, and the side members are pivoted to a trunnion which is also attached to the track assembly, in most cases directly opposite the extension of the sprocket shaft.

Another type of bulldozer has a frame which extends around not only the sides but the rear of the tractor and attached to the tractor drawbar from which point the entire bulldozer is propelled. This type of mounting is preferred by some users but apparently is coming into disfavor, largely because it interferes with the use of other equipment normally attached to the rear of the tractor, as well as with the use of the drawbar.

Also, there is a third type of bulldozer mounting referred to generally as "engine mounting." This is accomplished by means of an A-frame carried up over the front of the tractor and attached and braced to the side frame carrying the engine.

There are two general types of control for bulldozers; cable and hydraulic. The power control unit for either type may be mounted in the front or the rear of the tractor, the front mounting being desirable for two reasons; it permits mounting other equipment on the rear with which the cable control unit would otherwise interfere and also allows the dozer to be raised or lowered when tractor is not in motion.

Front or rear mounting must be determined at time of purchase of the unit to prevent unnecessary expense.

Sometimes a cable controlled dozer may be operated from one drum of a double drum winch, the main drum being used for general work, thus eliminating the necessity of two separate cable control units.

Following are operating instructions as prepared by the manufacturers of the equipment most commonly sold with Allis-Chalmers tractors.

OPERATING INSTRUCTIONS

When starting a cut or new road location on side hill of mountain slope, the receiving (forward) end of the moldboard should be lowered (adjust by removing angling pins on back of moldboard) about 6″ to allow sufficient material to be passed under the low side of the tractor track to bring it to a level position. The moldboard should also be angled to approximately 30° by means of adjusting the thrust channels to facilitate the "side casting" of earth materials. Possibly several trips will be required before sufficient material is cast on the low side of tractor so that the tractor can be kept level to traveling over this side casted soil. The moldboard can then be adjusted to its level position. In side hill cuts it is well to keep the cut about 4″ to 6″ lower inside, as the loose material on the outside will pack and settle down while traveling over it.

In building roads through timber regions, it is sometimes desirable to cut the trees off 2′ or 3′ above the ground line so that the roadbuilder and tractor will have some leverage by applying the raised blade against the stump near the top. Application of power up to the blade along with the forward motion of the tractor will usually extricate the smaller stumps. On larger stumps it is necessary to remove the earth and material from the base of the stump on one side so that the stump can b epushed out from the opposite side and removed more easily without unnecessary abuse of the equipment. Digging out unusually large stumps can be facilitated by lowering the receiving end of the blade to remove the earth and cut the roots all around the stump.

Small and wide sloping ditches can be cut with a roadbuilder by lowering and the receiving end of the moldboard and adjusting the thrust channels so that the moldboard is at right angles to the tractor. With the receiving end lowered, the moldboard may also be angled to side cast the material toward the crown of the road. In small ditches the desired vertical angle of the moldboard can be set to the desired depth without any further adjustment. However, when wide sloping ditches are being built, it may be necessary to change the vertical angle of the blade if several trips or cuts are necessary to accomplish the work, in order to compensate for the inclining position of the tractor as it travels over each new cut.

Bulldozer operation is quite similar to that of trailbuilders with the exception that the bulldozer blade is fixed and other means must be resorted to in order to put the blade at an angle with the ground line. For ditching and side slope work, this can be accomplished by gathering a mound of material with the bulldozer so one side or the other of the tractor can be operated over this collected material to give angularity to the blade. This method can be used to get the tractor started level or at any angle desired and can also be used for digging ditches, removing stumps and trees.

In building fills, the tractor should always be kept on the fill and the material dumped over the edge of the fill. When pushing material off the edge of the fill, the moldboard should be raised as the load spills away so that the edge of the fill will be left a little higher and will pack as the tractor continues to travel over this material as new material is being spread. Leaving the edge of the fill slightly higher eliminates the possibility of an earth slide in front of the tractor endangering both the operator and the unit.

The moldboard of the roadbuilder or side frames on the bulldozer are usually equipped with grading shoes. Grading shoes are located back of the cutting edge and give the moldboard considerable flotation by preventing the blade from digging in certain types of soil and

causing an uneven grade. The shoes are adjustable and should be adjusted ½" below the ground line when the cutting edge is on the ground for normal soil conditions. This adjustment should be changed when working in abnormal soil conditions and such adjustments can be correctly made after the operator becomes more thoroughly acquainted with his unit under varying soil conditions. By using grading shoes, the inexperienced operator can build a fairly level grade and there will be less tendency for the blade to drag into the soil and will also give the operator a chance to power up the blade before this overloading stalls the tractor. In rough and hard digging, it is sometimes advisable to take the shoes off as under such conditions the blade has very little tendency to dig in and the shoes, particularly in rocky soil, would be subject to damage and be somewhat of a disadvantage in the normal operation of the moldboard.

With the control lever in float position, the oil in the hoist assemblies is free to flow in or out, which results in the blade being free to move up or down, depending on the terrain over which it is moving. If the terrain is hard, the blade will not dig, and if the terrain is soft or of a clayish consistency, the blade will have a tendency to dig in. It is therefore, advisable to keep the control lever on hold position so the blade will not dig-in in soft soil materials nor will it bounce out and lose the load when it strikes obstructions such as small stones and tree roots. In most cases these obstructions will be cut in two or pulled out of the ground, leaving a smooth cut where the blade has traveled.

Short sluggish movements of the control lever will only partially open the control valve openings and result in high oil temperatures without noticeably slowing down the action of the moldboard. In order to carry a level grade, the control lever should be moved with rapid full strokes synchronized with the forward movement of the tractor. The proper relationship between the simultaneous operation of the tractor and that of the moldboard in making a smooth cut and carrying a level grade, is only obtained by considerable practice. Even experienced operators have considerable difficulty in making smooth cuts when changing from one make roadbuilder to another due to different speeds at which the moldboard operates. Although a fast operating blade and tractor requires slight additional practice to master its actions proficiently, such a unit contributes ease of operation, greater efficiency and larger yardage which reflects in greater earnings.

TO OPERATE ROADBUILDERS

To Raise, pull control lever backward.

To Lower, push control lever forward.

To Hold, allow lever to spring back to center position.

To Float, pull lever firmly backwards to its limit.

The float position can be efficiently used particularly when back dragging the moldboard. It is sometimes desirable for the operator to obtain a load of dirt behind the moldboard and by placing the control valve in float position and backing up the tractor, the loose dirt behind the moldboard will distribute evenly over a more or less uneven grade and smooth it out considerably.

F-GENERAL MAINTENANCE INSTRUCTIONS.

FOR

Gar Wood Hydraulic Unit

(NEW STYLE SINGLE SPOOL VALVE)

HYDRAULIC CONTROL UNIT

The Gar Wood Hydraulic Control Unit provides positive fluid power to the blade of the machine. It is the functional heart of the machine and deserves the same careful attention that is given to the tractor engine.

Each individual part of the unit has been designed to take the terrific punishment usually encountered in a machine of this type. Observation of the following simple rules will greatly increase the life of the machine.

1. Follow the instructions regarding the oil. Remember that in a hydraulic unit, the oil takes the place of mechanical parts, such as gears, drive shafts, clutches, etc., and does the same amount of work. For this reason, use the best oil obtainable; keep out the dirt; drain and refill periodically.
2. If machine is equipped with a pump throwout, USE IT. Never let the pump run for long periods when the tractor is used for other purposes. See Fig. 10.

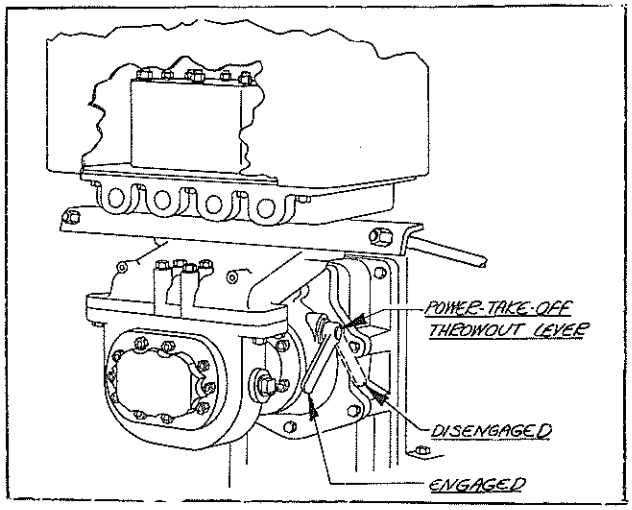

FIG. 10

3. The pressure relief valve is set at factory so unit operates satisfactorily with the minimum amount of pressure, and if absolutely necessary to change this valve always keep this in mind. Too high a pressure will cause

hose breakage and damage to pump.

Following are some of the common symptoms of wear, and the best methods of correction.

NOT ENOUGH POWER AT THE BLADE

Check the adjustment of the relief valve. Adjust until sufficient pressure is reached.

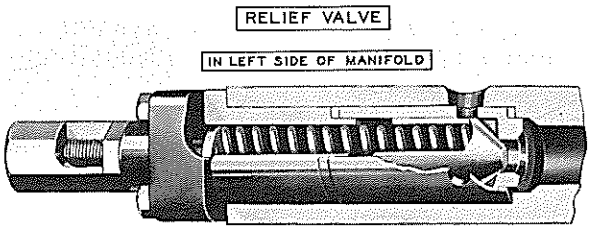

FIG. 10 A

If this fails to correct the condition, inspect the relief-valve seat, regrind if necessary, and then check the pump.

BLADE WILL NOT STAY UP

Check the entire system for leaks.

Install shut-off cocks in the oil lines leading to the hoist.

Raise the blade and close the shut-off cocks. If the blade still settles, the hoist piston rings are worn and should be replaced. If the blade stays up, the control valve tappet-seat needs regrinding.

BLADE MOVES TOO SLOWLY

If the action of the blade definitely slows up, the pump needs overhauling.

BLADE WILL NOT RAISE

Make sure the pump throwout is engaged. Check the unit for structural failure.

OIL OVERHEATS OR OVERFLOWS

Examine the oil level, and keep it within the proper range at all times. Inspect the condition of the oil. If it contains sludge and dirt, drain and refill at once.

Check the relief valve adjustment. Try to operate at a lower oil pressure.

PUMP LEAKS

Remove the pump and regrind the oil-seal seat.

THE PUMP

The most important part of the Hydraulic Control Unit is the pump. A good, economical practice is to overhaul the pump about once a year, or during a slack period between jobs. This is a relatively simple operation which any good mechanic can perform. The following suggestions may prove helpful.

a. Do not attempt to pry off the end covers with a chisel or other sharp tool. In each end cover you will find two threaded holes which have been placed there so that puller-screws can be used. Simply insert two screws and keep turning evenly until the covers come off. See Fig. 11.

b. To remove the bearings from the pump shafts, use a bearing puller or any tool that

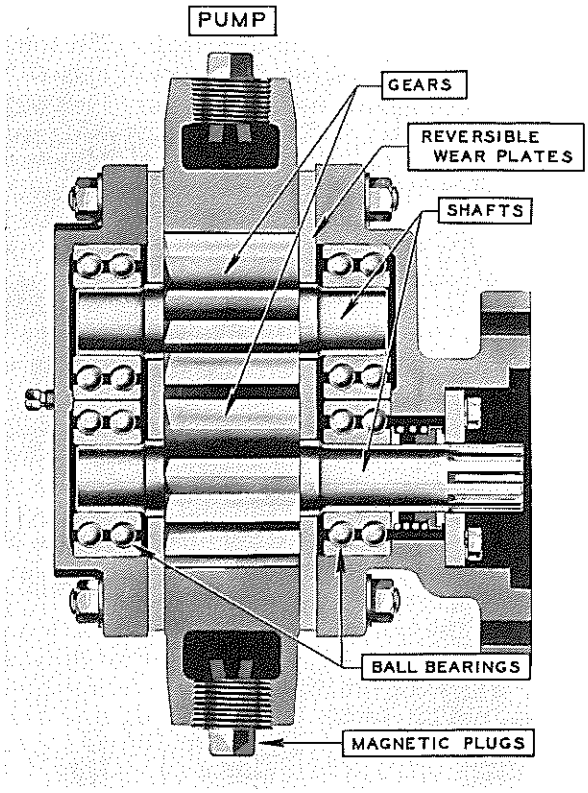

FIG. 10 B

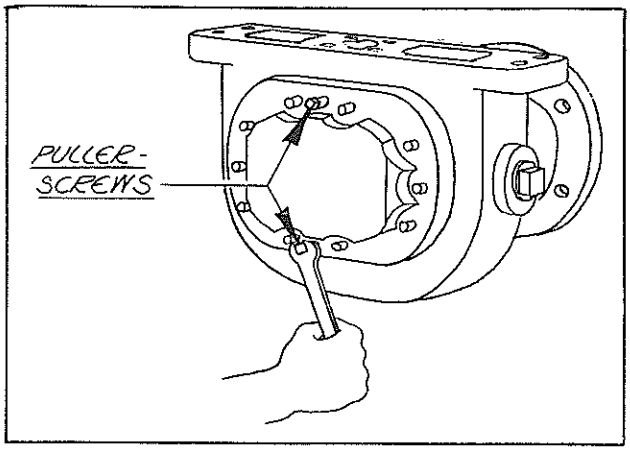

FIG. 11

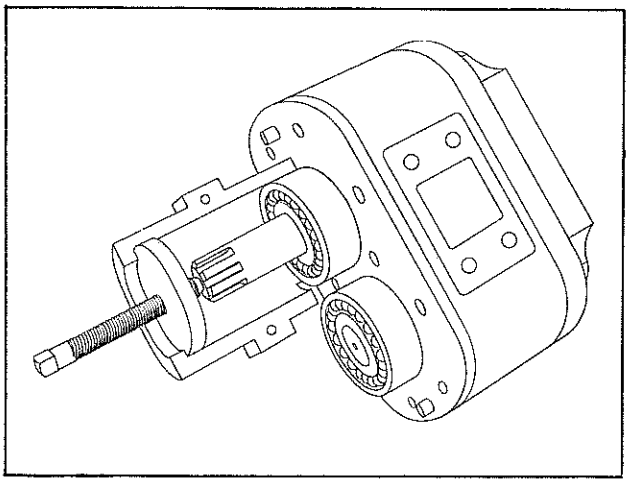

FIG. 12

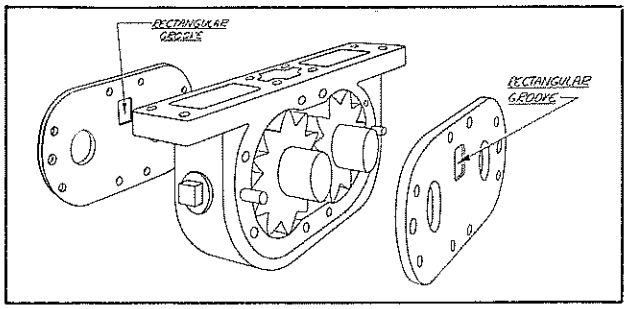

FIG. 13

will not damage the wear plates. See Fig. 12.

c. If the wear plates are badly worn or grooved, just turn them around so that the other side faces the gear. If they have already been used on both sides, have them refaced. Do not remove more than $\frac{1}{32}$" from each plate, and be sure that an even thickness is maintained all around the plate.

d. When rebuilding the pump, be sure that the rectangular grooves in each wear plate are on the output side. See Fig. 13.

e. Inspect the ball bearings. If they have more than 1" clearance between inner and outer races they must be replaced.

f. A leaky oil seal is usually caused by a damaged rubber or a scored seal seat. If the seat is scored, place the seal and seal seat on the shaft, hold upright and lap the seat in very lightly, using fine valve grinding compound. Be sure to remove all grinding compound before assembling the pump. When sliding the seal over the splined shaft, take special care to prevent damaging the rubber.

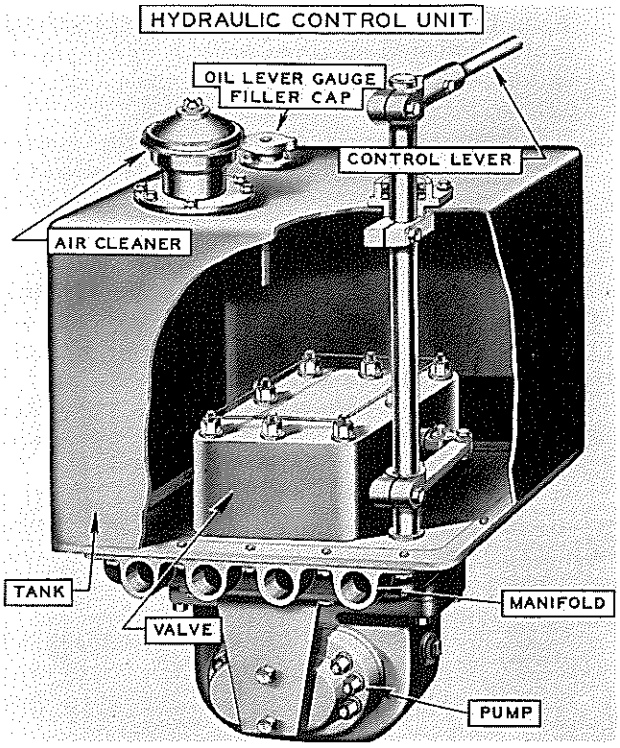

FIG. 13 A

g. Thoroughly clean or scrape all surfaces before rebuilding the pump. When everything

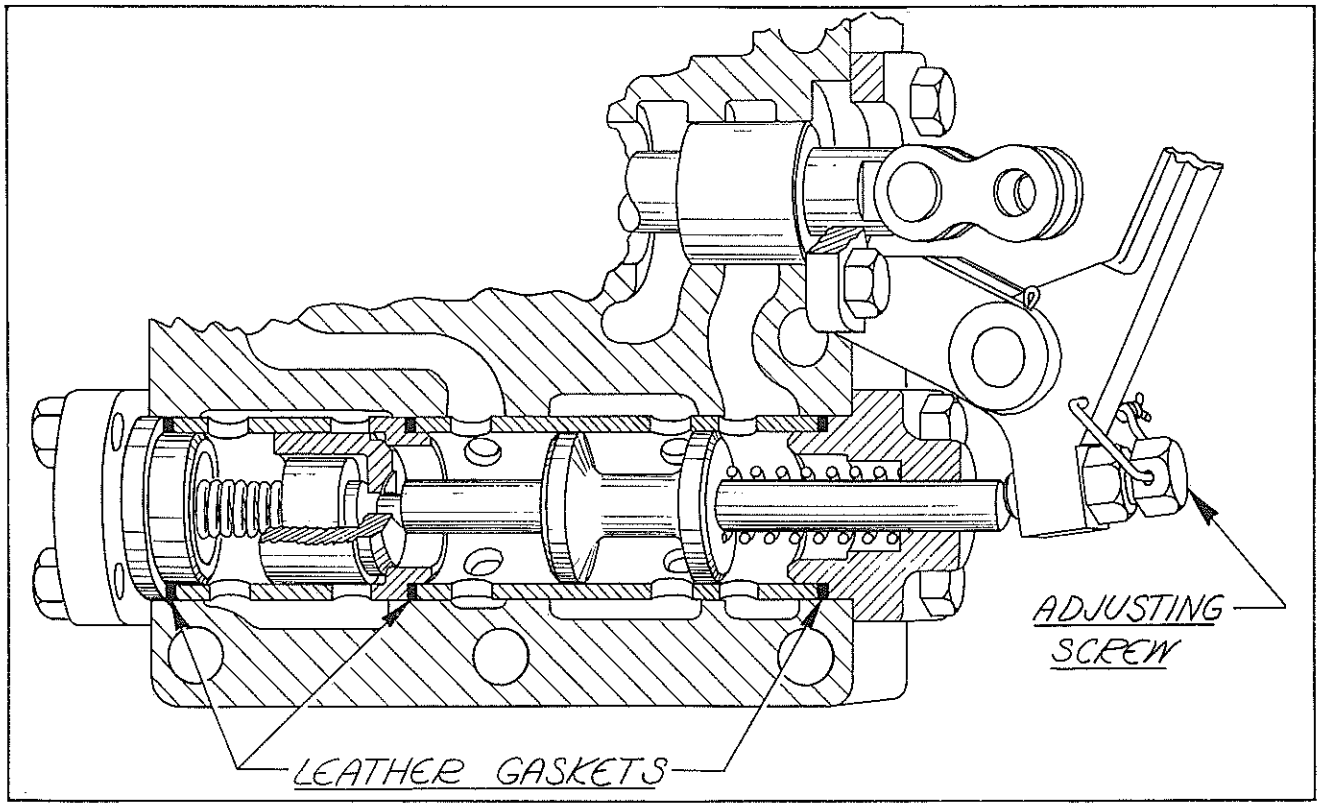

FIG. 14

is in readiness, cover the flat faces of the center and end-castings with a light coat of rim-and-gasket cement, and then bolt together as soon as possible.

h. All rear mounted pumps contain special magnet plugs which collect and hold harmful metallic particles. Remove and clean these plugs at frequent intervals.

THE CONTROL VALVE

The control valve is designed so that only one adjustment is possible or necessary on road-builder or bulldozer units, and no adjustment is needed on scraper units.

The bulldozer valve adjustment is set at the factory and should need no further attention, except in case of accident.

At one end of the valve, a short lever is mounted on a bracket. This lever contains the adjusting screw which is locked in place with a jam nut and securely wired to prevent turning.

NEVER ATTEMPT TO READJUST THIS SCREW unless the wire has accidentally broken and the jam nut loosened. In case of such accident, readjust as follows:

a. Unscrew the adjusting screw a few turns.
b. Mount the valve in place on the manifold and connect the control lever to the valve spool. Move the control lever to the "power down" position and hold it there.
c. Turn the adjusting screw "in", until the short lever has between 1/64" and $\frac{1}{16}$" play. Tighten the lock nut and wire securely. See Fig. 14.

Do not mistake any other part of the control lever system for a valve adjustment. While some units have additional control lever adjustments, this is the one and only valve adjustment.

When rebuilding the valve at any time, take care not to damage the leather gaskets on the tappet cage. However these gaskets can be replaced in an emergency with ordinary solder wire. See Fig. 14.

You will note that a gap exists between the tappet cover flange and the face of the valve housing. This takes care of variation in the length of the gaskets. Do not attempt to close the gap by excessive tightening of the cover cap screws.

When bolting the valve to the manifold, take particular care to tighten the nuts gradually and evenly to prevent distortion of the valve housing. The nuts should be tightened securely but not tight enough to cause distortion which might result in a sticky valve.

THE RELIEF VALVE

The relief valve is regulated and set at the factory and normally needs no adjustment. If more power is required (do not confuse this with speed) simply turn the adjusting screw half a turn at a time, until sufficient oil pressure is available. Inspect the valve seat periodically and "grind in" when necessary.

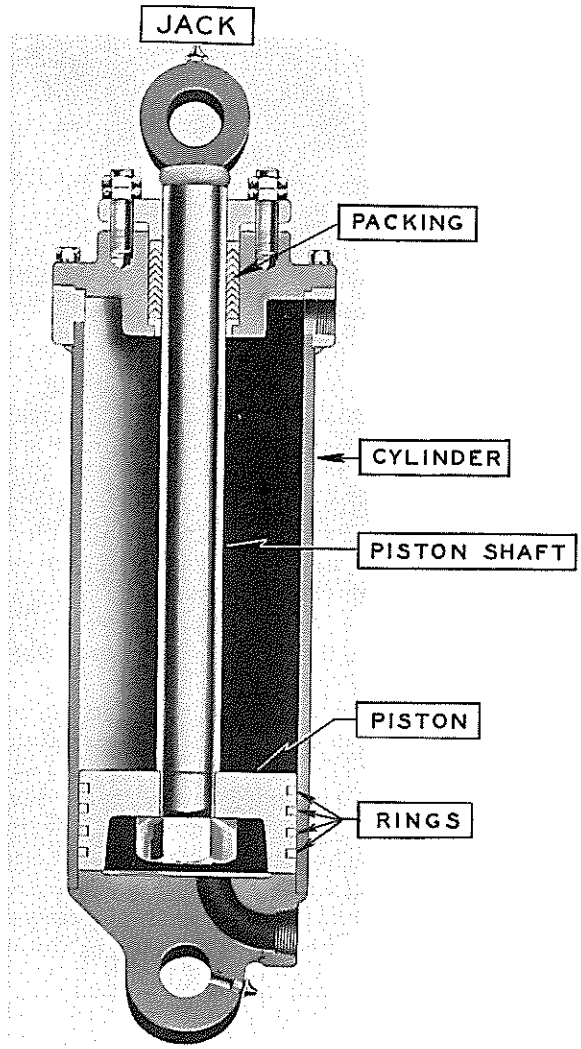

FIG. 15

DIRECTIONS FOR INSTALLING PACKING

After thoroughly cleaning stuffing box, apply a mixture of graphite and oil to each ring and install as indicated by the drawing, making sure the ring joints are staggered and the V section faces the pressure side. After installing the last ring, insert the gland and tighten down on the gland nuts with only sufficient pressure to prevent unnatural movement of the packing in the stuffing box. Do not use force as excessive bland pressure will only distort the packing and result in inefficient operation and short life.

LUBRICATION

Fill the oil tank to the proper level with any good grade of motor oil, as follows:

Temperature	Viscosity
Below 40° F.	S.A.E. No. 10
Between 40° and 80° F.	S.A.E. No. 20
Above 80° F.	S.A.E. No. 30

To prevent damaging the pump, do not race the engine in cold weather until the oil warms up.

INSPECT OIL FREQUENTLY—KEEP IT CLEAN

Drain and refill when oil becomes dirty or discolored. Move pistons all the way in before checking the oil level or adding oil. Strain oil thru a cloth or filter when refilling. Never use old oil, motor drainings or any oil heavier than the above recommendations.

Fill the power-take-off housing to the filler plug level with a good grade of transmission oil; preferably S.A.E. 140 during summer temperatures and S.A.E. 90 to meet winter conditions.

High pressure grease fittings are provided in the various moving parts of the Roadbuilder, particularly those parts subject to wear, and should be lubricated with Regular Tractor grease. In lubricating these points care should be taken that the grease is forced out of the bearings in order to keep the dirt out as well as providing lubrication for the moving parts.

ORDERING PARTS

When ordering parts, always give SERIAL NUMBER OF ROADBUILDER UNIT and make and model of tractor. Always order by part number. However, where this is not possible, give a comprehensive description of the part wanted, or supply a pencil sketch of same. When ordering hose, always give the required overall length including couplings of each piece wanted, and state whether plain, wire-wrapped at each end, or fully wire-wrapped, should be furnished. There are, periodically, minor changes made on certain parts which may not be covered by the parts book you have; therefore, if you fail to give the serial number when ordering parts, we cannot assume the responsibility of supplying the correct parts.

GAR WOOD INDUSTRIES, INC.
ROAD MACHINERY DIVISION

129 -- Baker Bulldozers, Gradebuilders & Snow Plows

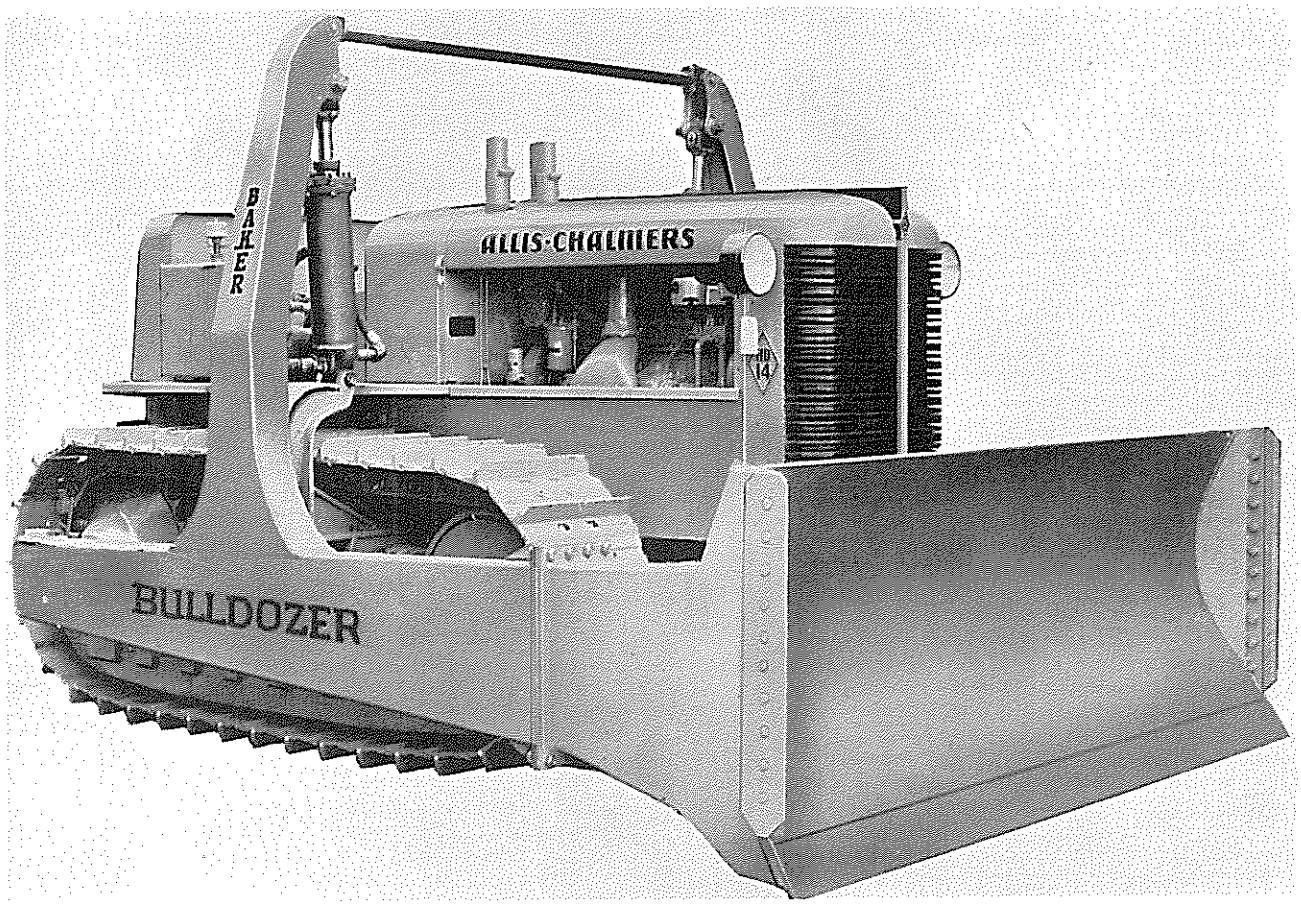

FIG. 1

A. OPERATING INSTRUCTIONS (Bulldozers & Gradebuilders)

The moldboard is controlled by four positions of the valve. These positions are referred to as RAISE, HOLD, LOWER and FLOAT and are located in this order with RAISE being the rear position of control lever and Float most forward position. The normal position of control lever is Hold and from this position operation begins. The lever should not be allowed to remain in Raise or Down position any longer than necessary.

1. TO RAISE MOLDBOARD, pull control-lever back from HOLD position firmly against stop. When moldboard reaches desired height, return lever to hold position. Do not raise moldboard any higher than necessary, and NEVER to extreme height when traveling over UNEVEN GROUND. The lifting cylinders are inter-communicating and act as a hydraulic equalizer. Pistons must be at least six inches below top of cylinder to allow movement, one piston up and the other down to compensate for Track oscillation. The hydraulic system is composed of some very closely machined parts and should not be abused by being operated when not necessary or against relief valve pressure when not necessary. The relief valve is built into the valve to protect system against overloads.
2. TO LOWER MOLDBOARD under pressure push the control-lever forward from HOLD position to first index. (This can be felt through lever.) In this position oil is forced into the top ends of the cylinders, forcing moldboard down. The entire weight of tractor may be used to force cutting edge into hard ground. The moldboard SHOULD NOT be lowered with lever in this position unless pump is running. To do so causes air to be pulled into cylinders and mixed with oil, causing unnecessary foaming; also, it may cause tank to overflow.
3. FLOATING THE MOLDBOARD—Place the lever in the extreme forward position. In this position all parts of the

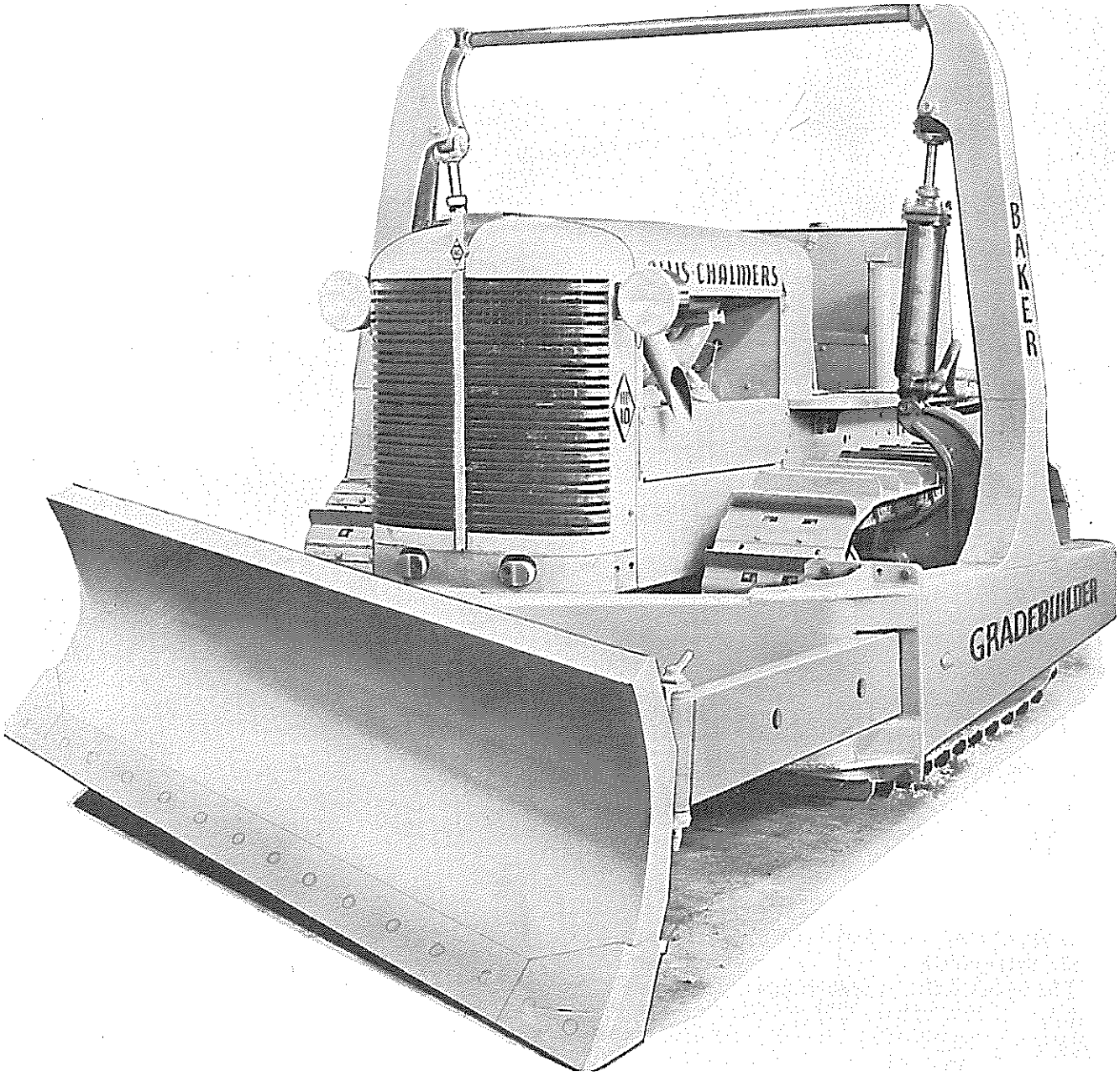

FIG. 2

valve are open allowing oil to circulate throughout the system with least resistance. This allows the moldboard to ride on the ground and is extremely useful in cleaning loose material off hard surfaces. The operator will note that it requires a little more effort to force lever in to float position where it will remain until pulled out, the reason being that the floating position is not so frequently used and in many operations the lever may be left in this position for an indefinite period of time. This position should be used to lower moldboard when pump is not running.

4. Before starting motor, operate control valve lever back and forward thru all positions to get the "feel" of the valve. Two types of valve and tank mounting are used on Baker bulldozers and gradebuilders. When valve and tank are mounted on rear of tractor the control lever operates valve by means of a connecting rod. Check linkage and oil moving parts at regular intervals to prevent wear. Be sure rod and lever clears all tractor parts so all parts move freely and with little effort. Wear in control lever and linkage does not affect the opening of ports in valve, but does necessitate greater travel of control lever.
5. The other type of valve, tank mounting has tank mounted at side of tractor seat and the control lever connected directly to the valve. This type of control requires practically no attention. Operat-

ors have "dubbed" this installation "Finger-tip Control" because of convenient location, ease and smoothness of operation.

6. When operating Bulldozers the first time after mounting on tractor, place control valve lever in hold position. Start motor with throttle slightly open. Operate bulldozer thru extreme range of cylinder UP and DOWN several times to work air out of hydraulic lines at same time check all connections for leaks. With moldboard raised to full height check hose. Turn fitting at either end of hose to give curve of greatest radius possible. (See photograph showing sweeping curves of hose.) Apply down pressure and fully collapse cylinders, check and adjust hose in this position. It may be necessary to repeat the above cycle two or three times to obtain best arrangement.

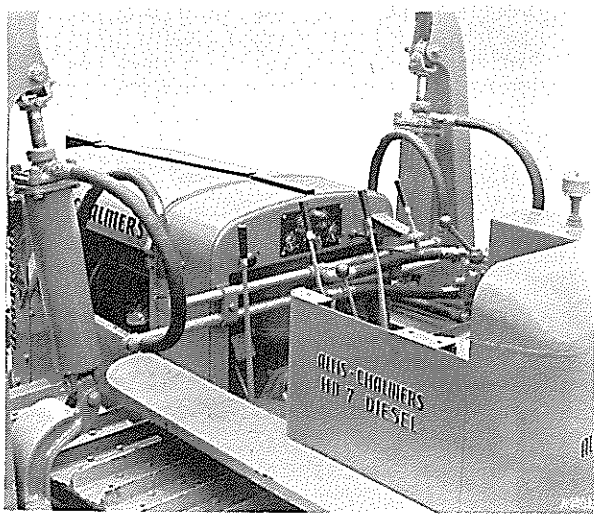

FIG. 3

IMPORTANT—When attaching or arranging hose DO NOT twist it. This may damage the wire braid or destroy bond between wire and lining. If there are any twists in hose after tightening be sure to remove them before operating.

7. Cutting edges—nose points—shoes and wear plates are designed in to the machines at points to absorb wear and can be easily replaced. The operator should check these parts each day, especially the cutting edge and nose points. Cutting edges should be reversed or replaced or built up by welding before wearing away enough to cause wear to take place on moldboard structure which supports the cutting edge. Wearing into the supporting structure may cause failure and costly repair.

8. IMPORTANT—When ordering repairs give MODEL and SERIAL NO. of machine. In case of hydraulic hose give additional information—diameter of hose and OVERALL length including threaded ends of pressed on fittings. DIAMETER of hose is determined by nominal pice size of fittings. Those used are—½"—¾"—1"—1¼" and 1½"

B. LUBRICATION

1. Use only CLEAN oil in the hydraulic system—dirty oil causes wear on the pump and valve parts.
   Below 10° F. .....S.A.E. 10
   10° to 90° F. .....S.A.E. 20
   Above 90° F. .....S.A.E. 30
2. Use straight mineral oil of a viscosity ranging between 150 and 250 sec. at 100 degrees. Oils in this range are suitable for operating at temperatures between 10 and 90 degrees, Fahrenheit. At lower temperatures use lighter oil and at temperatures above 90 a heavier oil may be used. After a pump has become worn, pressure may be increased to some extent by use of heavier oil, but it is recommended not to exceed an S.A.E. 40.
3. Drain old oil, flush entire system with kerosene and replenish with new oil every 300 hours of operation. Under extremely dusty conditions this should be done oftener.
4. Use a S. A. E. 90 oil during the winter and a S.A.E. 160 during the summer in the hydraulic pump drives and clutch cases.
5. High pressure grease fittings are provided at top and bottom of hydraulic cylinders and should be lubricated with regular tractor grease. In lubricating be sure to force enough grease in to bushings to force out old grease and dirt.

C. CARE OF HYDRAULIC PUMP

If the pump fails to deliver required pressure to the cylinders after continued service, the cause may be found in one or more of three places—Pump, Valve, or Cylinder.

1. Worn out cup leathers allow oil to flow past the piston and out the opposite end. This condition is usually accompanied by excessive temperature in continuous operation.
2. Any loss of oil from high pressure side of the valve to the low pressure side effects the operation of the cylinders and should be checked as outlined under "Care of Hydraulic Valve" before removing pump from tractor.
3. Should the cause not be found in the above sources, remove pump.

D. SERVICING PUMP

We recommend that pumps be returned to our plant for reconditioning. However,

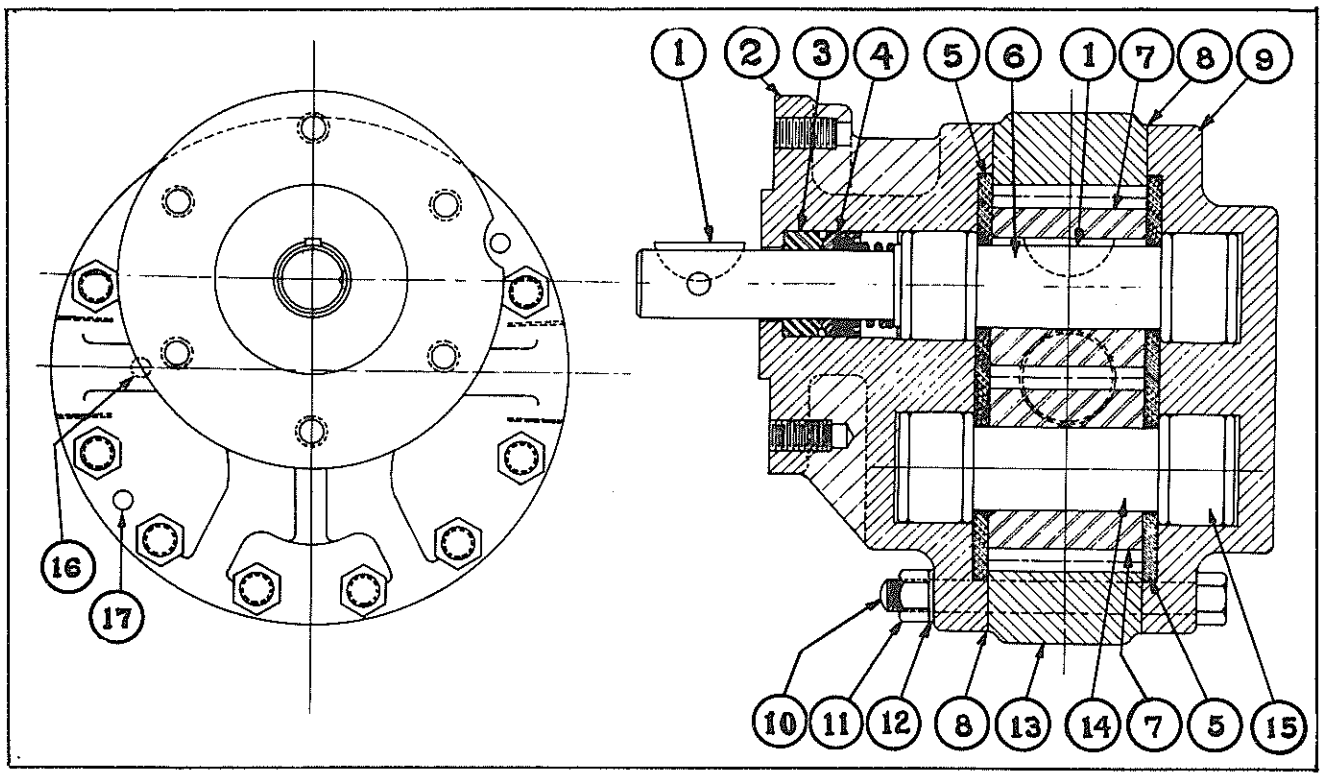

FIG. 4

minor repairs, such as replacing rotary seal, seat, bearings, or wear plates may be made in the field.

1. Select CLEAN place to take pump apart having previously washed exterior free of dirt.
2. Remove hardened Bolts No. 10 and entire pump may be taken apart.
3. Check surfaces of seal No. 4 and seal seat No. 3. These surfaces must be perfectly polished and if not should be pressed out and replaced. Care must be taken in replacing to secure perfectly contacting surfaces between seal and seat. It is sometimes necessary to lap this surface using grinding compound.
4. If surface of rotary seal is not damaged it may be used again but it is always advisable to replace the rubber or synthetic ring in the seal. This ring should fit tight on the shaft and serve as a seal on the shaft to drive the rotary seal. Occasionally a pump will leak at the seal due to shrinkage of this synthetic ring, in such case it is only necessary to replace the ring.
5. To check the necessity for new bearings in this pump requires special gauges. In case of doubt new ones should be used (New bearings of this type have more looseness than ball bearings and must be judged accordingly.)
6. If the bronze wear plates (No. 6) are worn they may be reversed. Before reversing care must be taken to be sure they are flat within .001 of an inch.
7. In reassembling pump, all parts must be in PERFECT alignment—The proper amount of clearance maintained between gears and wear plates. To maintain this proper alignment and clearance, tighten all bolts alternately, at same time turn projecting end of shaft with HAND. This shaft should turn freely until all bolts are completely TIGHT. At this time the shaft should turn with some effort indicating close fitting between gears and wear plates but NO BINDING. This clearance is regulated by use of gaskets No. 8 between case No. 13 and end covers No. 2 and No. 9. Proper clearance between gears and wear plates should be .001 to .002 of an inch each side.

   CAUTION—Use only CLEAN oil in the hydraulic system—dirty oil causes wear on the pump and valve parts.

   Use straight mineral oil of a viscosity ranging between 150 and 250 sec. at 100 degrees. Oils in this range are suitable for operating at temperatures between 10 and 90 degrees, Fahrenheit. At lower temperatures use lighter oil and at temperatures above 90 degrees a heavier oil may be used. After a pump has become worn, pressure may be increased to some extent by use of heavier oil, but it is recommended not to exceed an SAE 40.

   Drain old oil, flush entire system with

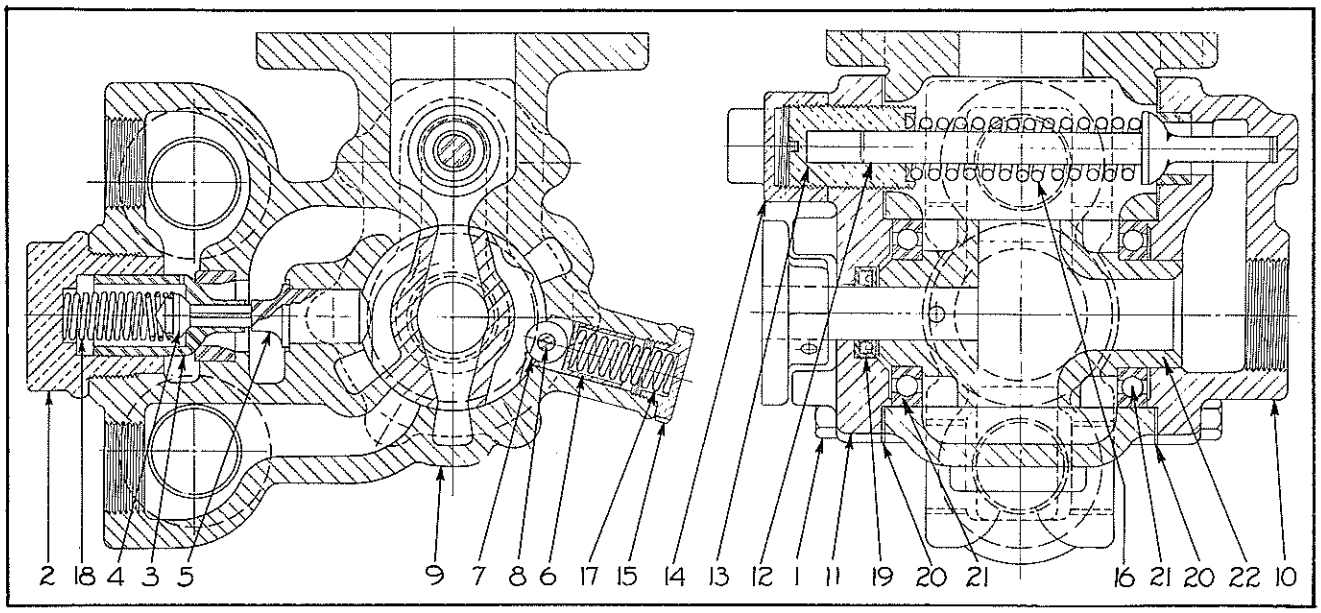

FIG. 5

kerosene and replenish with new oil every 300 hours of operation. Under extremely dusty conditions this should be done oftener.

E. CARE OF HYDRAULIC VALVE NO. 555R

1. The 555R Valve should require very little care or maintenance. All wearing parts are special steel hardened and operate in oil.
2. This valve is hydraulically balanced radially and the rotor is carried on precision ball bearings preventing contact with housing. This insures the easiest operating valve with minimum wear.
3. Before attempting to loosen parts on the valve, lower the moldboard to the ground, stop the engine and move the hand lever in both directions to relieve the pressure in the oil lines, then place lever in HOLD position.
4. Oil by-passes through relief valve 12 when load to be raised is excessive, or when cylinder pistons reach either end of stroke. If higher pressure is required for satisfactory operation, remove cap 14 and turn adjusting screw 13 clockwise — proper adjustment has been reached when moldboard raises satisfactorily under load. DO NOT set relief valve pressure higher than necessary for satisfactory operation.
5. This valve has the indexing mechanism built into the valve. This insures perfect alignment of ports with no chance of any parts getting out of adjustment. If it should become necessary to remove the cam roller 7 and plunger 6, be sure to reassemble as shown. If roller is assembled in "cocked" position, valve will "stick."
6. If Bulldozer moldboard settles to ground from a raised position, remove cap 2 and all parts in this cavity, clean thoroughly and replace. Be sure small hole in the side of check valve 3 is free of foreign matter. Check valve parts are special steel hardened and will rarely need replacing.
7. If oil leaks around rotor shaft, it will be necessary to disassemble valve, remove seal 19 and replace with new one. In reassembling be careful not to damage edge of sealing material.
8. To install new oil seal No. 19, remove closing cap 14, adjusting screw 13 and drive out tapered pin and remove valve stem head. Next remove head bolts 1 and remove cam stop head No. 11.
9. After 11 has been removed, press the seal 19 from this part. Next press the new seal into the head 11 with the sealing lips to the inside of the valve.
10. In installing and handling the new seal, BE VERY CAREFUL NOT TO DAMAGE THE LIP OF THE SEALING ELEMENT. Before assemblying the head over the valve shaft, BE SURE that this shaft is perfectly SMOOTH and that there are NO SHARP EDGES on the end or around the hole through which the tapered pin goes. Any damage to the sealing element may cause it to leak. Re-assemble all parts that have been removed.

F. CARE OF CYLINDER

1. All wearing parts in the cylinders are replaceable.
2. The piston rod is sealed by a chevron type packing. This type of packing is self-adjusting until it is worn out. Tightening the cap on is only a temporary remedy. If packing leaks soon after new

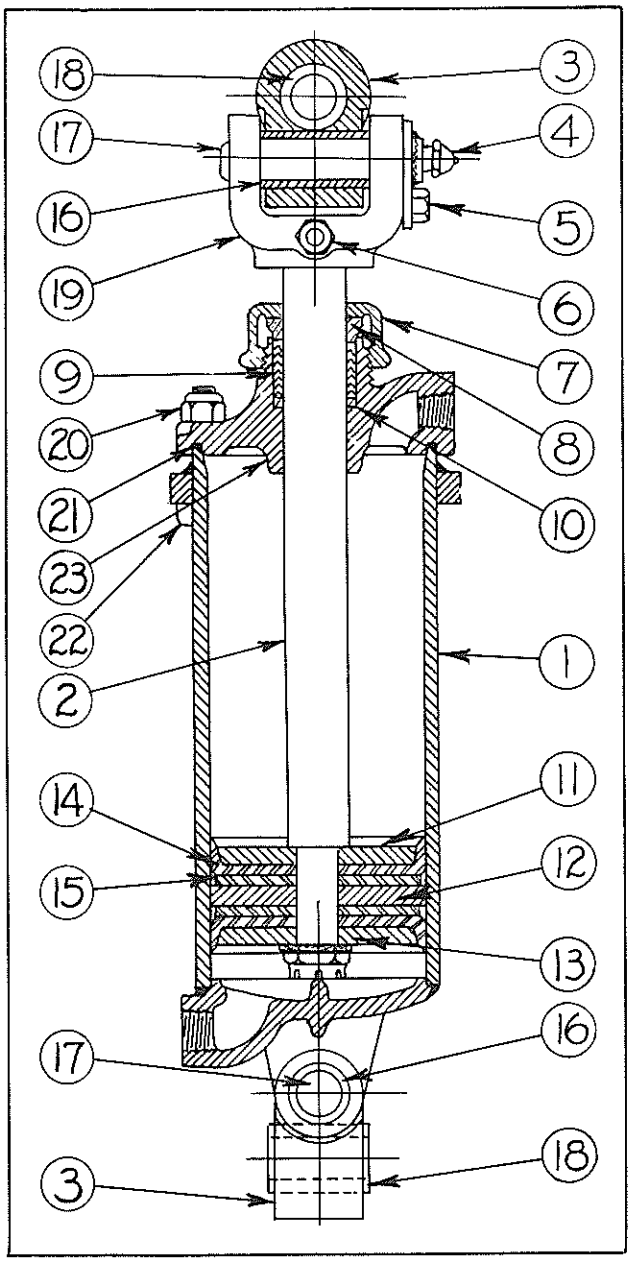

FIG. 6

installation, cap should be tightened until rings are properly seated to stop leaks.

3. When replacing packing, check gland No. 8 and guide ring No. 10 for wear. If inside diameter of these parts exceed .015 of an inch greater than rod diameter they should be replaced with new ones.
4. The above packing is made up in sets which include top and bottom ring and several sealing rings. Remove each ring separately and install one at a time. Stagger each joint as rings are put in place. This packing cannot be installed as a unit. Do not tighten cap too tight; the packing will last longer if adjustment is made after pressure is applied—give cap one turn more than required to stop leak.
5. The piston or cup packing is held on to the piston rod by the nut washer "13" and by removing the cotter pin, the cup leathers can be removed. Worn out cup leathers allow oil to slip past the piston. This causes the Bulldozer to operate slowly and produces excessive heat. Failure of cup leathers is usually caused by breaking through at the heel and at the lip, they will have to be replaced.
6. On some sizes of cylinders, 5" and over, the heel leathers are used as indicated by "15". This heel leather supports the heel of the cup and should be replaced with the cup leather after showing any appreciable amount of wear.
7. If at any time the cylinder leaks around the head and it cannot be stopped by tightening the bolts, it will be necessary to renew the copper asbestos gasket.
8. Lubricate the pins and bushing in universal at top and bottom of cylinder. There are two zerk fittings at top and two at bottom of each cylinder. This may be done each time tractor is lubricated and same grease may be used.
9. Steel bushings No. 18 are used thru top and bottom universal castings. These bushings are clamped tightly between the upright walls at top and cylinder carrying bracket lugs at bottom with bolts. These bolts should be checked periodically and tightened if necessary.

G. WHAT TO DO WHEN THERE IS LOSS OF SPEED IN RAISING MOLDBOARD

1. Check the oil supply in the tank and make sure that it is three-quarters full of good clean oil, and when the cutting edge is resting on the ground. See oil recommended under "Lubrication."
2. The next place to look is in the suction hose between the pump and the supply tank. It sometimes happens that the lining of the hose collapsed and causes the hose to be choked. In this case only the hose would have to be replaced.
3. Worn out cup leathers in cylinders will cause moldboard to raise slowly, due to oil passing between piston and cylinder wall—See "Care of Cylinders."
4. When the operation starts to slow up do not re-set the relief valve expecting to cure the trouble. This relief valve is set for the proper operation when the Bulldozer is new and if, at that time, the operation was satisfactory, raising the pressure by re-setting will not cure the trouble. For trouble in valve, see "Care of Valve."
5. If the above suggestions of possible trouble do not increase the speed of raising the moldboard, then pump should be removed from the tractor and taken

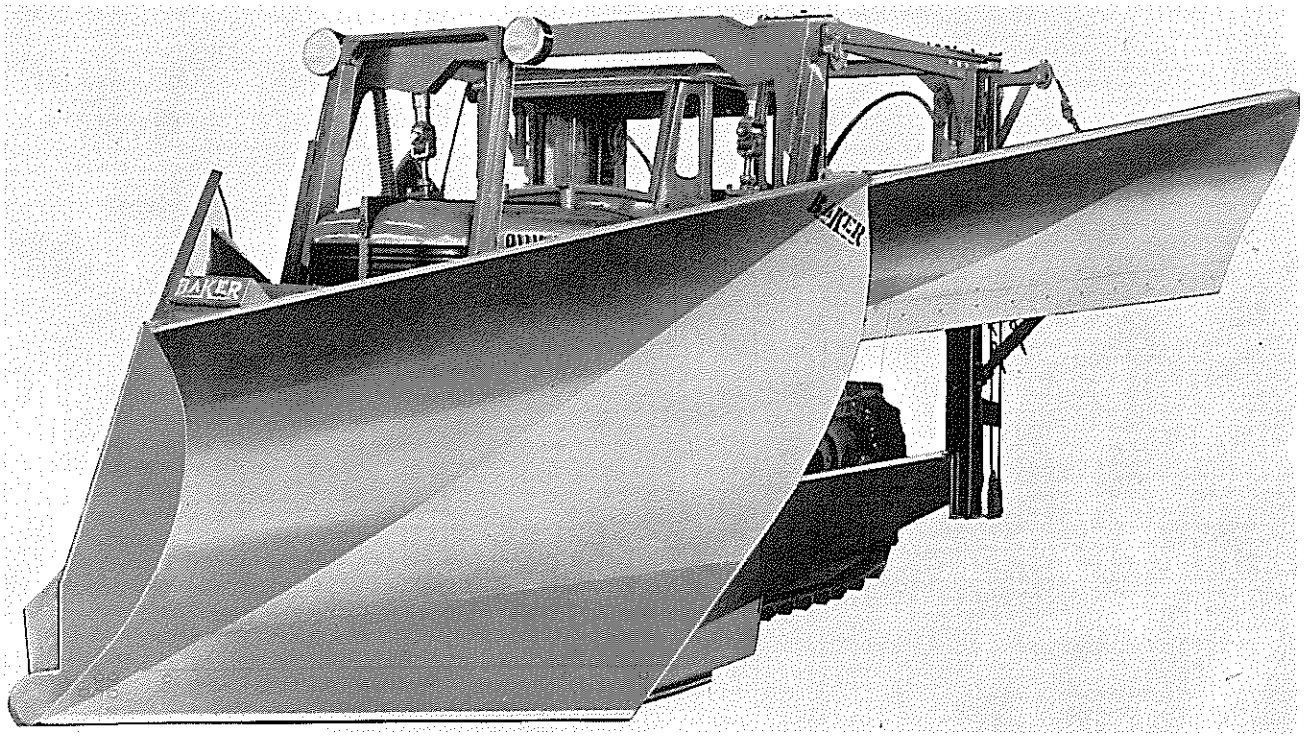

FIG. 7

apart.

6. Ordinarily, outside of keeping the bolts tight and using clean oil, there is nothing to do on the pump. However, a close watch should be kept on the amount of oil used. If no leaks are in the pipe line or hose and the oil is disappearing, it is possible that the rotary seal has given away and the oil is being wasted by going into the transmission case in which case the seal should be immediately replaced. See "Care of Hydraulic Pump."

H. SNOW PLOW DESCRIPTION

Baker tractor snow plows are full power hydraulically controlled. A dual rotary gear pump is located on the rear power take off of the tractor. The larger pump is used to supply oil to the cylinders which operate the plow proper. The smaller pump supplies oil to the four cylinders which operate each end of both wings as well as the inner end of the wing struts. Only by use of a dual pump can satisfactory snow plow wing operation be obtained. First because the difference in volume requirement for operating speed between plow and wings and second because operators must be able to operate plow and wing simultaneously.

After wing struts have been adjusted for desired plowing width operator need not leave cab for further adjustment. Wings may be positioned at any desired angle or level between ground line and maximum height, or folded in for passing obstructions, by operating wing control levers inside cab. Outer ends of wings are supported by a special double strut arrangement. This arrangement allows wings to fold to any desired angle without distortion and yet provides wing with support which cannot be obtained with one strut.

I. OPERATION (Snow Plow)

The moldboard is controlled by four positions of the valve. These positions are referred to as RAISE, HOLD, LOWER and FLOAT and are located in this order with Raise being the rear position of control lever and Float, the most forward position. The normal position of control lever is Hold and from this position operation begins. The lever should not be allowed to remain in Raise or Down position any longer than necessary. Before starting tractor motor, operate control lever back and forward a few times to get the "feel" of the valve.

1. TO RAISE MOLDBOARD, pull control-lever back from HOLD position firmly against stop. When moldboard reaches desired height, return lever to hold position. Do not raise moldboard any higher than necessary, and NEVER to extreme height when traveling over UNEVEN GROUND. The hydraulic system is composed of some very closely machined parts and should not be abused by being operated when not necessary or against relief valve pressure when not necessary. The relief valve is built into

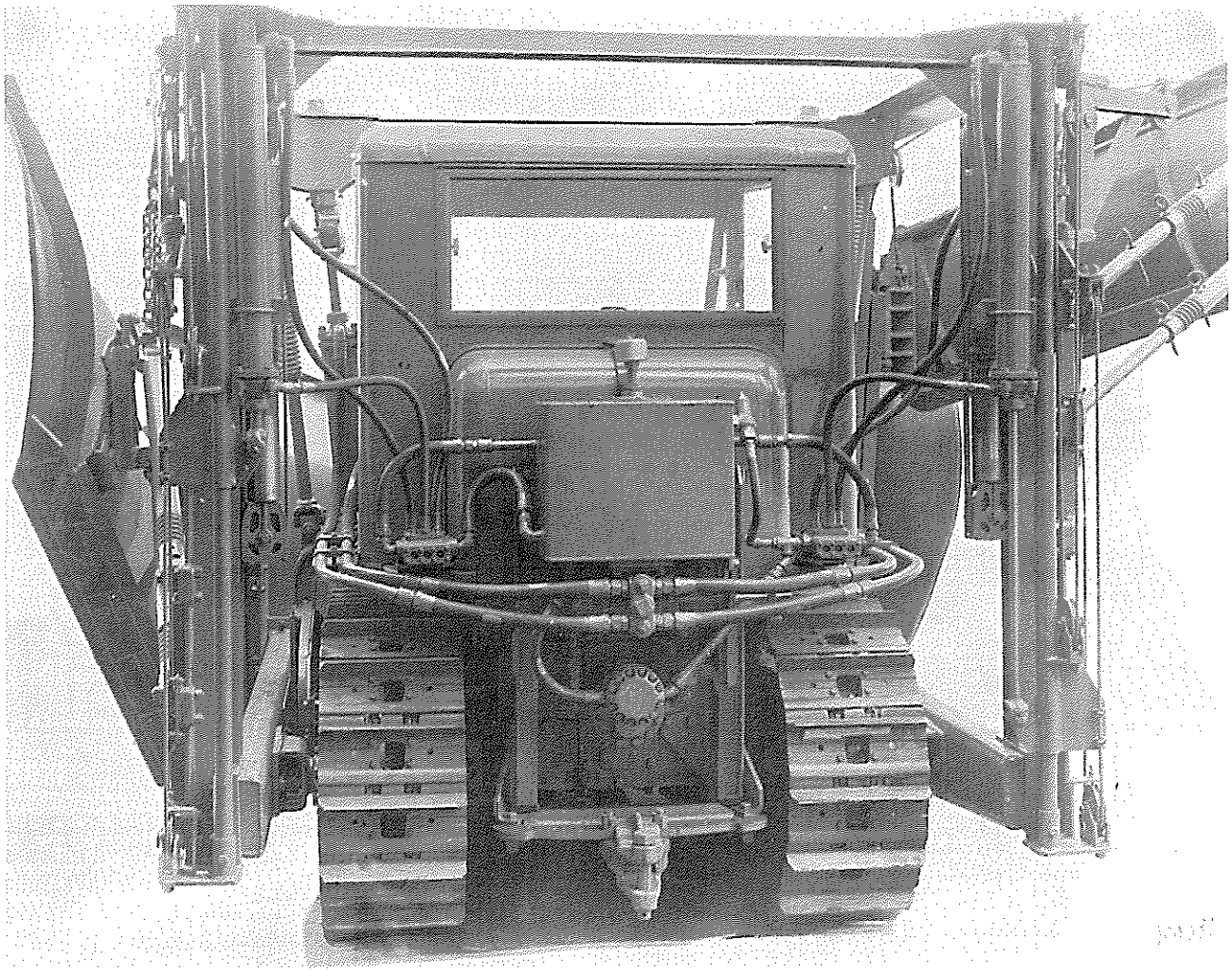

FIG. 8

the valve to protect system against overloads.

2. TO LOWER MOLDBOARD UNDER PRESSURE, push the control lever forward from HOLD position to first index. (This can be felt through lever.) In this position oil is forced into the top ends of the cylinders, forcing moldboard down. The entire weight of tractor may be used to force cutting edge under hard snow. The moldboard SHOULD NOT be lowered with lever in this position unless pump is running. To do so causes air to be pulled into cylinders and mixed with oil, causing unnecessary foaming; also, it may cause tank to over-flow.
3. FLOATING THE MOLDBOARD — Place the lever in the extreme forward position. In this position all ports of the valve are open allowing oil to circulate throughout the system with least resistance. This position should be used to lower moldboard when pump is not running and is the position most commonly used for plowing snow. It allows the moldboard to follow the contour of the road. This is essential in plowing over country roads and fields. There are three wear runners or shoes which support the moldboard cutting edge at a predetermined height from ground. These shoes, have screw adjustment. To lower shoe turn lever counter clock-wise, to raise shoe turn clock-wise. In hard packed snow, shoes may have to be raised even with or above cutting edge to get under snow.

Four levers are used to control the operation of the wings. Two levers are located at each side of the cab. The most satisfactory tractor snow plowing requires two operators, and controls are designed and located so that the tractor driver operates the tractor and left hand wing, while the helper operates the main plow and right hand wing. The control valves for operating the wings are three position (raise, lower and hold) spool type with spring return.

Control lever automatically returns to

hold position from either raise or lower position.

J. LUBRICATION (Snow Plow)

Lubrication of snow plows is in general same as for bulldozers. In selecting lubricant take low temperatures into consideration. Tractor lubricants may be used for snow plows.

Snow plows are used only at intervals throughout the winter season therefore, all exposed and moving parts such as, pistons, piston rods, slides, sheaves etc. should be well oiled or greased immediately after operations cease to prevent rusting and assure proper operation when next put in use.

HYDRAULIC OIL

Use an oil suitable for hydraulic use having the following properties:

To -10° F Viscosity 160 -170 sec @ 100° F -10° to -50° F Viscosity 70 -100 sec @ 100° F -50° cold pour

K. CARE AND SERVICE (Snow Plow)

The Hydraulic system used for control of snow plow functions the same as the Bulldozer system. Refer to instructions under Bulldozers and Gradebuilders for care and service of Pump, Valve and Cylinders. The dual pump is actually two pumps and may be serviced as separate pumps. A small pump is bolted to the rear end of a large pump and is driven direct by the drive shaft of the larger pump.

The double acting cylinders are of the same construction as the cylinders on Bulldozer and require same care. The cylinders used to operate the outer end of the wing are of the single acting, displacement type and require only chevron type packing at the top. The packing gland on these cylinders should never be too tight as this causes too much friction and prevents ram from returning as it should.

ALWAYS keep in mind that tractor snow plows are needed only a few months during the year and are in actual use only short periods at a time. Most plows do not wear out, but certain operating parts are inherently susceptible to corrosion or rusting if not properly cared for during period of non use. The operating efficiency of the unit depends on having it in first class condition and ready to function when storm strikes. Extreme care should be taken to protect critical parts when storing unit during summer months.

130 -- Carco Hoists (Pacific Car & Foundry Co.)

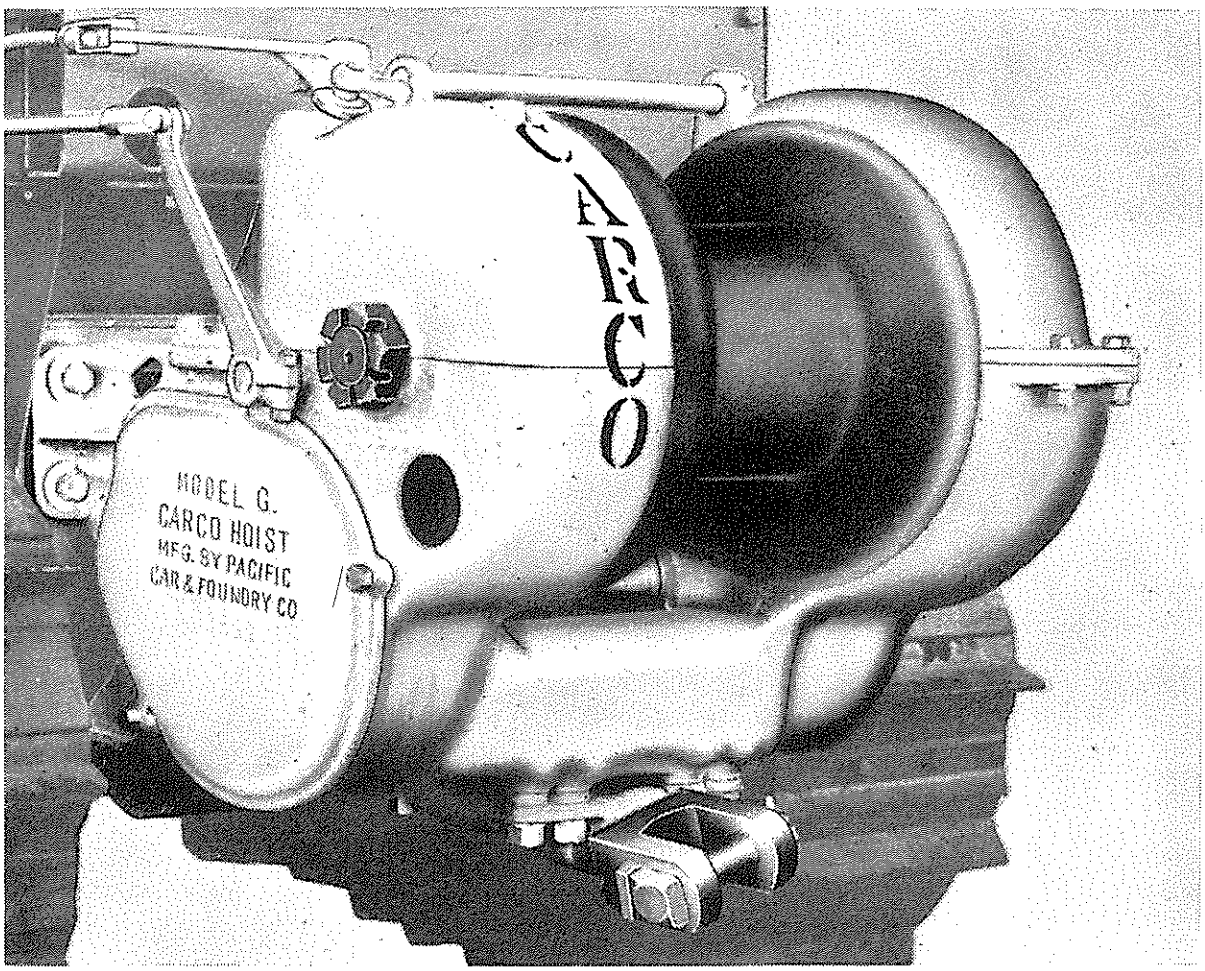

FIG. 1

A. MODEL "G" HOISTS

1. LUBRICATION.

Keep oil level between oil inspection plugs on right hand side of hoist case. Approximately six gallons of oil are required to fill hoist. Use standard tractor transmission lubricants.

Remove pipe plug on brake cover once a week and lubricate brake shaft bearing through alemite fitting on end of brake shaft. CAUTION: Excessive lubrication at this point may cause grease to run out onto brake drum.

If hoist has free-wheeling brake, remove brake drum once in 6 months for inspection and lubrication. Apply, very sparingly, high temperature grease (melting point 400° F.) to ratchet and pawls within brake drum.

Grease cable drum bearing once a week through alemite fitting in hole on left hand side of case flange. Grease control stand levers once a week.

2. BRAKE.

To connect brake control rod at time of installing hoist: (1) set brake adjusting handle so that flanged bushing below adjusting handle will raise ⅛" to ¼" above hoist case when brake is on; (2) with control rod connected to control stand lever in off position, adjust rod length so that rod may be connected to brake arm on hoist when brake arm is held in "on" position.

To tighten brake, turn brake adjusting handle to the right. After considerable useage it may be found that further turning of brake adjusting handle may not make the brake hold, but may only cause it to drag. At this time the adjusting handle should be backed off and the slack taken up in the control rod in the same manner as at time of installing hoist.

3. ROTATION.

The cable can be wound in on either top or bottom of cable drum. Standard fac-

tory assembly provides for greater pull when overwinding.

The direction of maximum pull may be changed from overwind to underwind without additional parts by assembling bevel gear on opposite side of bevel pinion. This is done by sliding bevel gear shaft part way out through right hand side of hoist case to allow removal and reassembly of bevel gear.

When the line is changed from overwind to underwind, the free-wheeling brake drum must be removed and replaced with the opposite side outward in order that the free-wheeling ratchet may operate.

4. TO ADJUST BEVEL GEAR.
When bevel gear is on right hand side of bevel pinion, make adjustment by adding or removing shims at bearing carrier. After adjustment is made, take up end play in shaft with adjusting nut. CAUTION: Do not tighten adjusting nut excessively as this will cause undue thrust load on bearing. With bevel gear on left side of bevel pinion, make adjustment by turning adjusting nut. CAUTION: Be sure shaft is driven tight into bearing on left side. After adjustment is made, take up end play in spur gears and bushings by adding or removing shims at bearing carrier.
5. TO ADJUST BEVEL PINION.
Adjustment is made at the bevel pinion carrier by adding or removing shims. To make this adjustment hoist must be dismounted from tractor.

B. MODEL "E" FREE-SPOOLING REVERSIBLE HOIST

1. LUBRICATION.
Drum shaft bearing and drum bushing at the brake end, should be greased sparingly once a day. The latter is reached through hole in the case flange. Too much grease might flow out onto the brake and destroy its efficiency. A high temperature grease is recommended.

Brake shaft and reverse shaft rotate on self-lubricated bearings and need no further lubrication.
2. BRAKES.
The brake is assembled at the factory to resist the line pull when the line spools off the bottom of the drum.

When it is desired to spool the line off the top of drum, it is necessary to reverse the brake in order that it will be self-energizing. To do this, pull a connecting pin in the brake control rod allowing the brake lever to fall backward and loosen the brake band. Then remove the push rod from its inside position to the outside position. Connect up brake rod and adjust brakes again.
3. ADJUSTMENT OF BEVEL PINION.
If it becomes necessary to adjust the bevel pinion in relation to the bevel gear: (1) remove hoist from tractor; (2) remove 6 capscrews at front end of bevel pinion which hold bearing cap C10219 in place, then remove the bearing cap, bearing cup and bearing; (3) adjustment is then made by adding or removing as necessary the proper number of # 19 Timken shims between bearing cup and the hoist case cover plate.
4. TO ADJUST BEVEL GEAR.
NOTE: It is not necessary to remove hoist from tractor to make this adjustment.

Remove the 6 capscrews at the gear end of the main drum which hold bearing cap in place. Adjustment is then made by adding or removing as necessary the required number of shims between the hoist case and the bearing cap. Inspection of adjustment can be made by removing the inspection plug on the gear end of the hoist.

To reassemble, replace bearing cap and the 6 capscrews. Three of these are short and screw into the case. They should be tightened first. The other three extend through the case and screw into thrust plate.
5. CARCOMETAL.
All casings which are subject to stress in Carco hoists are made of Carcometal which has an elastic strength of about double that of ordinary cast steel.Carcometal, despite its high strength and toughness, is free machining and can be welded by any of the standard processes with the same ease as mild steel.
6. GEARS AND SHAFTS.
All gears and shafts in Carco hoists are of the highest grade alloy steels, chosen and heat treated for the particular work demanded on these parts.
7. INTERCHANGEABILITY.
All parts that go into Carco hoists are made to patterns and gauges and are interchangeable on any other piece of Carco equipment of the same class. This insures ease of repairs in remote places.

C. MODEL "L" CARCO HOIST

The hoist is of very simple and compact design and, if properly operated and maintained, should be practically trouble-free. Overheating of the clutch, loose bearings and leakage are principal causes of trouble and, in most cases, one of these will cause another.

1. OVERHEATING CAUSES.
The most common causes of overheating are:

a. CLUTCH SLIPPAGE. The operator should engage the clutch firmly and quickly and return the lever immediately to the released position.
b. Loose lining on driving cone will make cone drag when released and cause heating.
c. Loose bearings.

2. OVERHEATING CONSEQUENCES. When the clutch overheats, it loosens because of expansion of the driven cone. (The driving cone is insulated with the lining and does not expand as much.) If tightened too much while hot, there will not be sufficient clearance between clutch lining and driven cone when the latter begins to cool. Consequently, it will continue to run hot until it either burns itself clear or burns up.
Excessive heat in the clutch, radiating to the brake, will cause brake slippage. Heat radiating throughout the hoist will also cause the oil seals to harden and leak.

3. CLUTCH AND BRAKE ADJUSTMENT.
To adjust clutch release brake. Loosen hub nut and insert bar in drum hub and turn right to tighten and left to release. Tighten until clutch takes hold or until the drum can not be turned by hand, then back off until drum turns without drag.
CAUTION: THE ENGINE MUST BE RUNNING WHILE MAKING THIS ADJUSTMENT.
Check adjustment of clutch to make sure that the handlever travel is about 12" from "OFF" to "ON" position. Don't operate with the clutch adjusted too close.
The position of the handlever can be changed by lengthening or shortening the control rod without disturbing the clutch adjustment.
To adjust the brake on a new hoist or after installing a new brake band, back off nuts on main spring eye bolt until brake begins to slip. Then adjust brake snugly—but not too tight. It must be loose when handlever is in released position. Tighten main spring until brake holds load without slipping.

The hoist should be operated with the least possible tension in the spring to avoid excessive drag when lifting. As the brake lining wears, tighten the band and not the spring.
NOTE: The brake is self-energizing. It is always on when hoist is reeling in but drum is then running against the energizing effect and does not brake but is always ready for action as soon as the drum tends to run in the opposite direction.

4. LOOSE BEARINGS.
To check for loose drum bearings release the brake. Insert a bar between drum housing and drum and pry back and forth while watching for end play. If loose, the drum should be removed and the bearings taken up. The inner or drive hub bearings should be checked while hoist is disassembled. Loose bearings will cause oil seals to leak due to abnormal movements of the working parts.

5. TO REMOVE DRUMS. Remove bolts holding drum housing to pilot plate. Turn drum hub anti-clockwise which removes drum assembly from hoist. Be careful not to cut and destroy oil seals while sliding drum over shaft.

6. TO RELINE CONE.
Remove all old material from cone and drive on lining snugly but not too tight. Be sure that splice is centered between the 4 holes provided for riveting on either side of it. Use "C" clamps to hold lining in place. Drill for rivets and rivet securely.
When using the molded type lining, cover the cone with a rubber cement, such as "Permatex", to fill up all irregularities on cone and lining.

7. OIL SEALS.
Seal trouble can be prevented or remedied by making sure that the bearings are well adjusted and the seals properly installed. The seals should be soft and pliable and should be pressed into place with equal pressure all around to avoid distortion and breaking of the oil seal case.
The oil seals of the leather type can be softened in Neetsfoot oil or kerosene. Whenever the hoist is taken apart, inspect the oil seals and if they show wear or damage be sure to replace. They cost very little but can cause much trouble when leaking.

8. GREASING.
The inner bearings are lubricated by the oil in the gear case. The drum bearings should be lubricated with an "ABSORBED OIL LUBRICANT" such as E. F. Houghton's # 200 or General Petroleum's Mobilgrease # 5.
The frequency of this lubrication is dependent upon many factors, such as temperature, type of service, etc. so that any time interval can hardly be given. The bearings are lubricated at the factory, and should operate for at least 1,000 hours before needing attention provided

there are no oil leaks. Lubricate sparingly so as to avoid pressure on the oil seals and subsequent leaks.

D. HYDRECO PUMP

1. Never run the pump without first making sure there is oil in the system. The gears and wear plates are made and assembled to close tolerance and if the pump is operated without oil, it will cause damage to the gears and wear plates and decrease their life materially.
2. If after continued service, the lifting and lowering of the bulldozer blade slows down and the pump does not deliver its required pressure, and if such lack of speed and pressure is not caused by insufficient oil supply or a leaking relief valve, the pump should be removed for inspection.
3. Select a clean place to lay the parts before taking the pump apart. IMPORTANT—When the pump is taken apart, ALL PARTS should be marked so that they may be reassembled in the identical manner. Remove cover and housing, being careful not to damage the gaskets.
4. If the wear plates show wear from the gears, they should be replaced. When installing new wear plates, use the same number of paper gaskets on each side as were used in the original assembly. This should provide .003″ to .004″ clearance between the pump gears and wear plates. If, however, the plates are only worn slightly, it may be corrected by removing a gasket or two from between the housing and end covers.
5. If the gears are worn or there is too much clearance between the gears and the housing, one or both of these items may have to be replaced.
6. When inspecting or replacing the rotary seal, be sure not to damage or leave any foreign matter on the sealing surface. This seal depends upon the surface between parts and if they are worn or damaged, a new seal must be installed. If a new pump or a new seal leaks slightly when going into service, it may be caused by some small defect or dirt on the sealing surface and should correct itself after the first or second day of service. This condition is rare, but may happen.
7. For extensive repairs, send the pump to the Pacific Car & Foundry Co., Renton, Washington. Service pumps are available at nominal rental fees and will be supplied on request.

131 -- Buckeye Bulldozers and Trailbuilders

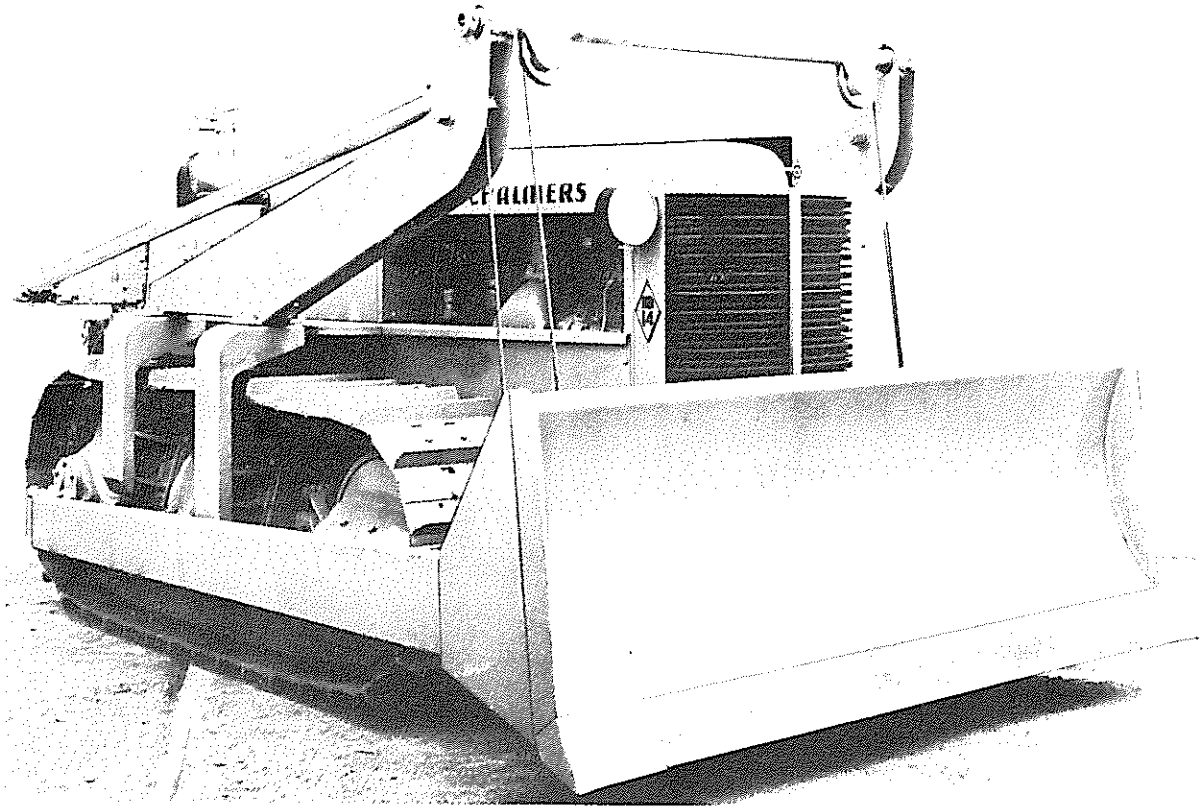

BUCKEYE BULLDOZERS AND TRAILBUILDERS

The operating life of a bulldozer or trailbuilder can be materially increased and fewer shut-downs will be experienced if the unit is properly serviced at regular periodic intervals. Often major repairs and shut-downs can be avoided if the bulldozer or trailbuilder and power control unit is inspected regularly and the trouble corrected when it is of a minor nature.

The following outline gives the operator the points that should be lubricated and checked at each inspection period.

TEN (10) HOUR SERVICE

Lubricate:

- All grease fittings on power control unit.
- All grease fittings on bulldozer or trailbuilder.

Check:

- Power control unit oil level.
- Entire unit for loose bolts and nuts.

SIXTY (60) HOUR SERVICE

Check:

- Power control unit clutch and brake adjustment.
- Bulldozer or trailbuilder control cable for wear.

TWO HUNDRED (200) HOUR SERVICE

Lubricate:

- Power control unit drum bearings.

EIGHT HUNDRED (800) HOUR SERVICE

Drain, flush and refill the power control unit.

INSTALLATION INSTRUCTIONS

Mount support brackets on track frame of tractor.

Some models of tractors require a separate lift arm that fastens to the top of the track frame brackets and extends up and forward with sheaves at the front end. This arm should be mounted after the brackets are bolted to the track frames.

Some models also have an equalizer cross shaft that is mounted over the radiator and is attached by means of a ball socket to the lift arms on the track frames.

Mount power control unit on rear face of tractor transmission case. See power control unit parts and instruction book for instructions.

Install cable guard pipe on R.H. side of tractor between swinging fairlead on power control unit and sheave block at front end of support bracket.

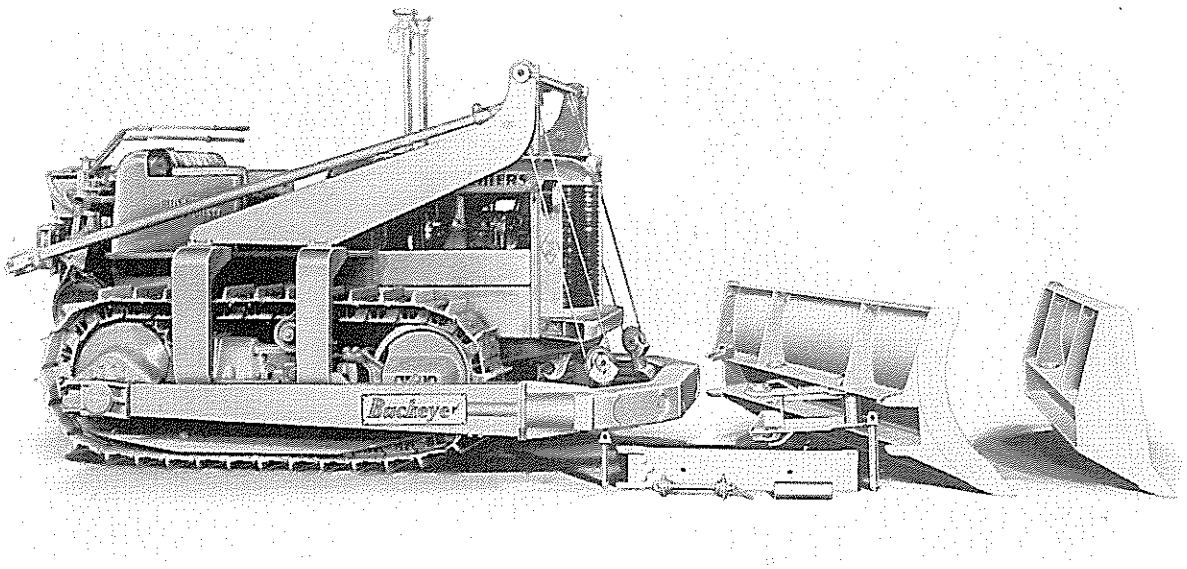

Place push arms into horn which is already assembled with Moldboard and staybars. Open trunnion caps at rear end of push arms by removing top pin. Block up rear end of push arms to height of trunnions on tractor and drive tractor into place. Replace trunnion caps on push arms.

Thread cable through sheaves. Start at front sheave on right hand support bracket. Thread one end back to winch through cable guard pipe and attach to cable drum of winch. Wind three turns of cable on drum. Thread other end of cable through sheaves on moldboard and dead end cable on R.H. or L.H. support bracket (depends on model of tractor). Excess cable is coiled around cable guard pipe or support bracket. As the cable is worn out on the winch it can be cut off and more pulled through from extra that is coiled around cable guard pipe or support bracket.

ANGLING TRAILBUILDER MOLDBOARD

L	Landside	A	Clamp Screw
IB	Inner Brace	B	Adjusting Link
K	King Pin	C	Adjusting Locks
P	Lock Pin	D	Push Arms

The moldboard may be angled either to the right, to the left, or parallel with the front of the tractor.

To change the angle of the moldboard from right to left, remove lock pins "P" in landside "L" and remove landside. Remove two king pins "K" that hold inner brace "IB" in place and remove inner brace. Then with the moldboard raised off the ground, swing it to the left as far as it will go. Install king pin "K" in L.H. side of horn. Remove king pin "K" from R.H. side of horn. With the moldboard still raised off the ground, swing the R.H. end forward and install inner brace "IB" and landside "L" at right end.

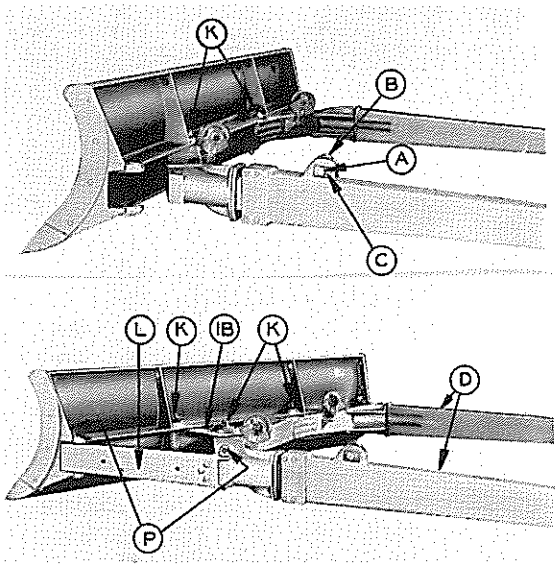

To place the moldboard parallel with front of tractor for bulldozing, remove lock pins "P" in landside "L" and remove landside. Remove two king pins "K" that hold inner brace "IB" in place and remove inner brace. Then with the moldboard raised off the ground, swing it to the left as far as it will go. Install king pin "K" on L.H. side of horn.

Under certain working conditions it is desirable to lower or raise one end of the moldboard in relation to the other end.

This is accomplished by means of a tilting trunnion set into the front end of the R.H. or L.H. push arm. This tilting device permits either end of the moldboard to be raised or lowered approximately 12″ in relation to the other end.

To adjust, loosen clamp screw "A" until the serrations on the adjusting locks "C" clear those on the adjusting link "B". Lift the moldboard and place a block under the end of the moldboard that is to be raised and then drop the moldboard on the block until the proper tilt has been accomplished. Then tighten the clamp screw "A", making sure that the serrations on the adjusting locks "C" fit into those on the adjusting link "B".

INSTRUCTIONS FOR OPERATION

Before starting to operate inspect the oil level in the power control unit.

Inspect all lubricating points to see if they have been properly lubricated.

After the first ten hours of operation, the bulldozer or trailbuilder should be stopped and inspected for loose bolts and nuts, and the power control unit clutch and brake adjustments checked.

Care should be taken never to allow excess slack in the cable at the power control unit. Slack in the cable may result in a kink or damage by catching on some part of the power control unit. A slack cable while working does not permit instantaneous control of the moldboard cutting edge thus causing a "washboard" cut or grade.

Proper adjustment of operating levers will greatly reduce operating fatigue.

INSTALLATION INSTRUCTIONS

BUCKEYE Model MD and HD Power Control Units can be mounted on practically all the standard makes and models of tractors. Special adaptor castings, adaptor shafts, control levers, bolts and gaskets are furnished to suit the particular make and model of tractor on which the unit is to be mounted. Due to the specific nature of the various adaptations, no single set of mounting instructions can be formulated. In a general way the adaptation requires: (1) Mounting the required adaptor shaft, (2) Mounting the adaptor casting on the tractor, (3) Bolting the power control unit to the adaptor and (4) Mounting the control levers. Most adaptations are obvious to any tractor mechanic or operator. Specific instructions will be furnished for the more difficult installations.

LUBRICATING INSTRUCTIONS FOR WINCH

There are ONLY THREE PLACES to lubricate on the Buckeye G-L-T power control unit.

Remove the ¾″ pipe plug on the winch housing and fill up to the level of the plug, using the same lubricant you are using in the tractor transmission.

Two zerk fittings are provided in the cable drums. Lubricate with one or two strokes of a zerk gun (filled with soft cup grease) every other day of operation.

FOR FAIRLEADS

Zerk gun the 8 fittings (4 on the sheaves and 4 on the swivel sheave bearings) using the same lubricant as you are using on scraper or other equipment sheaves.

Bushings in control shafts require no lubrication.

INSTRUCTIONS FOR ADJUSTING

The Buckeye G-L-T Power Control Unit must be adjusted while running, preferably when the drums are hooked to the load for

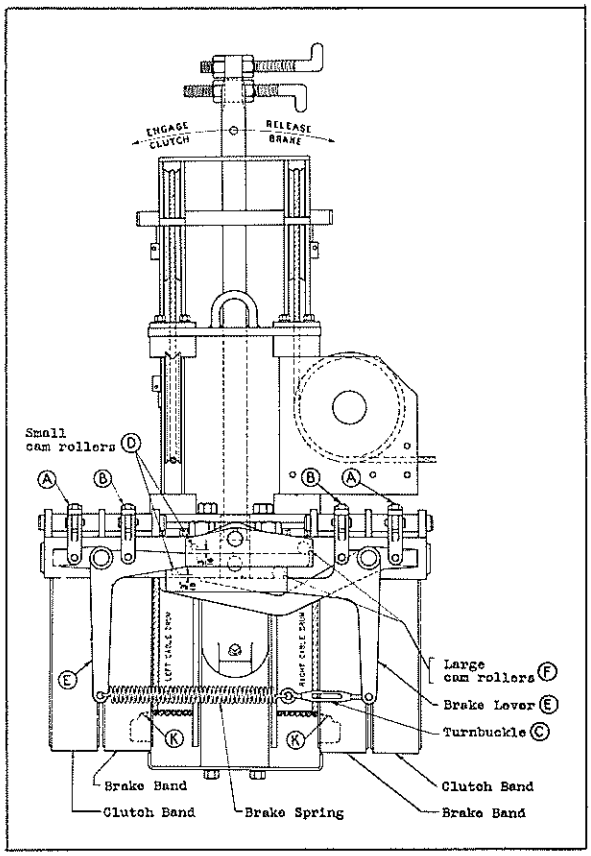

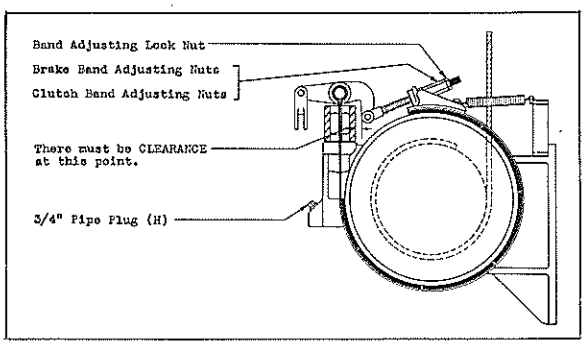

testing the adjustment as it is made.

1. Loosen both clutch adjusting nuts (A) so that the clutch bands are loose and sloppy on the drums.
2. Tighten the brake spring by means of turnbuckle (C) to about the position shown on the illustration.
3. Tighten both adjusting nuts (B) until there is about $\frac{3}{16}$" clearance between the smaller cam rollers (D) and the brake levers (E) when the larger cam rollers (F) are just touching the brake levers (E), as clearly shown in the illustration. This will give a slight lost motion (about 1") in the operating lever at the handle and when this lost motion disappears the operator must tighten the adjusting nuts (B) a part of a turn to maintain the adjustment as outlined. CAUTION:—If both the large and the small brake rollers are touching the lever at the same time the brake will not hold and brake adjusting nuts (B) must be tightened as described above. When the brakes are adjusted as above, extra braking force to hold the heaviest loads can be obtained by tightening the brake spring by means of the turnbuckle (C). DO NOT attempt to get additional braking power by tightening the brake adjusting nuts (B) as these adjusting nuts are simply for the purpose of maintaining the proper adjustment between the two cam rollers and the brake lever.
4. Now adjust the clutches by tightening the clutch adjusting nuts (A) until the clutch will raise the load (without first dropping it) when the operating lever is pulled slowly to the clutching position. The clutches will not run hot if properly adjusted. If they do, relieve the friction of the bands by releasing the clutch adjusting nuts (A) a fraction of a turn.

OPERATING INSTRUCTIONS

Each drum of the Buckeye MD and HD Power Control Unit is controlled by a separate operating lever. The Upper Lever controls the Left Side Drum and the Lower Level Controls the Right Side Drum. (Left and Right are treated as being the operator's left and right when seated in the tractor seat).

Movement of either control lever away from the opeartor (that is, towards the right side of the tractor) releases the brake on the hoist drum and lowers the load. Pulling the lever towards the operator engages the clutch, simultaneously releasing the brake, and raises the load. Releasing the lever engages the drug brake automatically.

The lower control unit is operated for pulling in cable only when the tractor engine is running and the master clutch of the tractor is engaged. Loads can be released or lowered at any time independent as to whether the tractor engine is running or the master clutch of the tractor is engaged or released.