PARTS CATALOG

FOR

MODEL "AD" GRADERS

This catalog contains complete parts information for the Model AD3 Grader (3-cylinder engine) and the Model AD4 Grader (4-cylinder engine). The prefix "AD3" or "AD4" preceding the serial number of the machine provides positive identification of the Model. This prefix is important since the majority of the parts are common to both units and the same series of Unit Serial Numbers is used to facilitate design changes.

NOTE: A few of the early Model AD Graders have the prefix "IF" preceding the serial number. These are all Model AD3 Graders and should be identified as such when ordering repair parts.

The Grader Serial Number will be found stamped on a plate attached to the right side of the frame near the operator's platform.

The Engine Serial Number is stamped on the right hand side of the cylinder block near the top front corner.

Effective approximately August 1948, the engine serial numbering system was changed as a measure toward simplification. Under the old system the prefixes 371 and 471 (followed by the serial number) denoted the 3 and 4 cylinder engines respectively (Example: 371-78610). The new system uses the prefixes 3A and 4A respectively to serve the same purpose. However, with the new prefixes, the serial numbers start over again (Example: 3A-097).

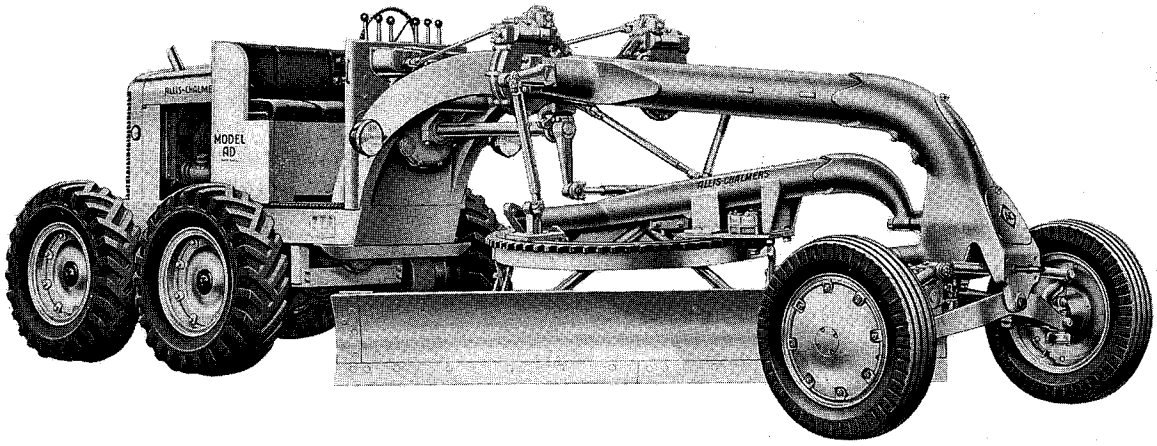

IMPORTANT

ALWAYS GIVE THE GRADER AND ENGINE SERIAL NUMBERS WHEN ORDERING PARTS.

To obtain parts promptly, give part name and part number.

Order parts from the dealer covering the local territory.

Repairs for standard motor accessories such as generators and starting motors should be ordered from authorized Service Stations maintained by manufacturers of these units throughout the country.

Always state post office address, town, county and state where parts are to be shipped. Also specify whether material is to be shipped by freight, express or parcel post.

Confirm all telephone or telegraph orders in writing.

No credit will be allowed on parts unless they are returned to the dealer from whom they were purchased; from there they will be returned, at the customer's expense, to the factory for inspection.

Unless claims for shortages or errors are made immediately upon receipt of goods, they will not be considered.

When broken goods are received, a full description of the damage should be made by the carrier agent on the freight bill. If this description is insisted upon, full damage can always be collected from the transportation company.

No responsibility is assumed for delay or damage to merchandise while in transit. Our responsibility ceases upon delivery of shipment to the transportation company from whom a receipt is received showing that shipment was in good condition when delivered to them; therefore, claims (if any) should be filed with the transportation company and not with Allis-Chalmers Manufacturing Company.

The right is reserved to change the construction or material of any parts where it seems desirable to do so, without incurring the obligation of installing such changes on graders already delivered.

TELEGRAPHIC CODE

In sending wire orders, it is important that a one-word description of the part wanted be specified after each part number. In event the message is received with incorrect part number, it will help us to ascertain the part actually required. Confirm each telegraphic order by mail in order that it may be checked and if not correctly transmitted, the error detected.

Shipping or other instructions in the body of a telegram which normally consists of many words, can be condensed into one by the use of the proper code word as given below:

AIRYX -- Ship by Air Express
SONST -- Ship to me (us) by Express
SOOTY -- Ship by Express to
SOYON -- Ship to me (us) by Mail
SOBOS -- Ship by Mail to
SORAT -- Ship to me (us) by Freight
SAPAT -- Ship by Freight to
SPLAT -- When and how did you ship parts on my (our) order
SPATS When and how will you ship parts on my (our) order
STAUB -- Cancel my (our) parts order
STUFE -- Add to my (our) parts order
SOMOR -- Duplicate shipment of my (our) order

FOREWORD

The parts listed in this catalog have been divided into sections such as ENGINE SECTION, OILING SYSTEM, etc. Sections have been divided into groups. For example, the ENGINE SECTION consists of closely related groups such as CYLINDER BLOCK, CYLINDER HEAD, CRANKSHAFT, etc. The OILING SYSTEM consists of OIL PUMP, OIL FILTER, etc.

The extreme right hand column in the parts list entitled "KIT NO." indicates if an individual part is also available as a part of a KIT or SET. All numbers shown in this column are listed numerically in the last section of this catalog with the quantity and description of the various parts that make up the KIT or SET.

The terms "right" and "left" used throughout this catalog are determined by facing the direction of forward travel.

Attaching parts, such as bolts, nuts, rivets, screws, washers, etc., are indented immediately following the parts which they attach.

Any changes or corrections to this catalog will appear on the regular supplement form.

LIST OF ABBREVIATIONS

assembly	assy.
cadmium plated	cd-pltd.
candle power	c.p.
centimeter	cm.
continued	cont'd.
copper-asbestos	cop-asb.
countersunk head	ctsk-hd.
diameter	diam.
foot or feet	ft.
gallon	gal.
hexagonal head	hex-hd.
inch	in.
inside diameter	I.D.
millimeter	mm.
National Coarse	NC
National Fine	NF
National Pipe Thread	NPT
number	No.
ounce	oz.
outside diameter	O.D.
pound	lb.
revolutions per minute	rpm
round head	rd-hd.
Society of Automotive Engineers	SAE
square head	sq-hd.
standard	std.
teeth	T.
volt	V.

SECTION INDEX

ENGINE
Page 6

OILING SYSTEM
Page 27

MANIFOLD, FUEL AND AIR SYSTEM
Page 45

COOLING SYSTEM
Page 97

POWER TRANSMISSION SYSTEM
Page 105

CHASSIS
Page 137

INSTRUMENTS AND ELECTRIC STARTING & LIGHTING
Page 219

SPECIAL EQUIPMENT
Page 237

SERVICE KITS
Page 270

NUMERICAL INDEX
Page 276

ENGINE

	PAGE NUMBER
Air Box Drain	15
Balance Shaft and Weights	21
Balance Weight Cover	13
Camshaft	21
Connecting Rod	19
Crankshaft	17
Crankshaft Front Cover	13
Cylinder Block	9
Cylinder Block Front Covers	13
Cylinder Head	23
Cylinder Liner	19
Engine and Mounting	7
Flywheel	17
Flywheel Housing	11
Governor	69
Oil Pan	14
Oil Level Gauge	14
Piston	19
Rocker Arms	25
Rocker Cover	23
Timing Gears	17,21 75
Valve Mechanism	25

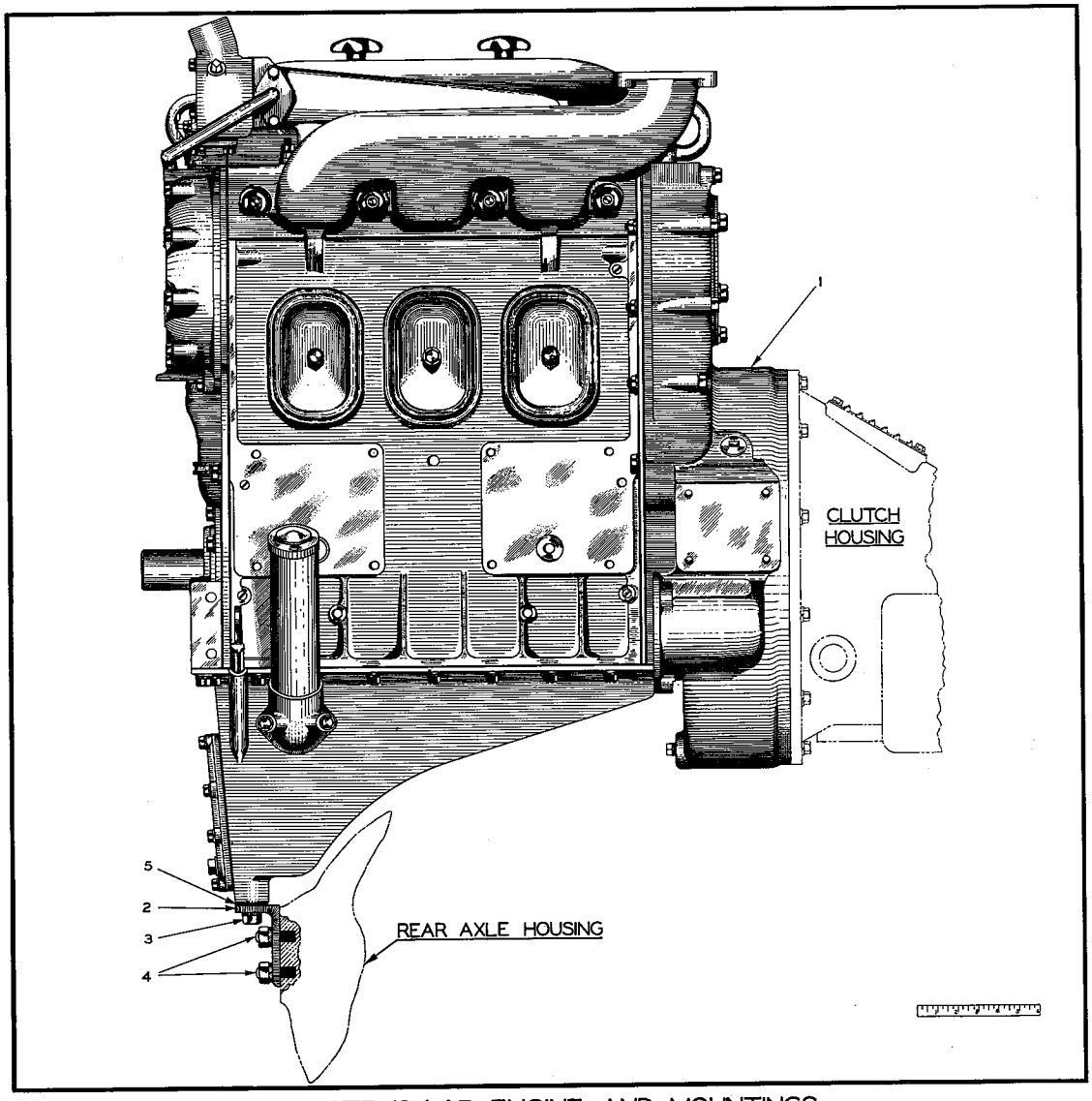

PLATE 1344B–ENGINE AND MOUNTINGS

ENGINE AND MOUNTING

ITEM	PART NUMBER	QUANTITY AD3	QUANTITY AD4	DESCRIPTION	KIT NUMBER
1	604177	1	-	ENGINE ASSEMBLY, 3-cylinder (Less FAN, but including BLOWER, GOVERNOR, water PUMP, fuel PUMP, oil COOLER, and MANIFOLDS)(Graders prior to serial #328)	
	605942	1	-	ENGINE ASSEMBLY, 3-cylinder (Less FAN, but including BLOWER, GOVERNOR, water PUMP, fuel PUMP, oil COOLER and MANIFOLDS)(Graders after serial #327)	
	061195	-	1	ENGINE ASSEMBLY, 4-cylinder (Less FAN, but including BLOWER, GOVERNOR, water PUMP, fuel PUMP, oil COOLER and MANIFOLDS)(Not illustrated)	
2	604242	1	-	SUPPORT, engine - rear	
	061201	-	1	SUPPORT, engine - rear (Not illustrated)	
3	903639	2	2	CAPSCREW, 1/2"NC x 1-1/2"	
	904208	2	2	LOCKWASHER, 1/2"	
4	604241	3	3	STUD (1/2"NC x 1-7/8")	
	911028	3	3	NUT, 1/2"NC	
	904208	3	3	LOCKWASHER, 1/2"	
5	604240	12	12	SHIM, spacing, engine rear support (.005" thick. Use as req'd)	
	604239	12	12	SHIM, spacing, engine rear support (.031" thick. Use as req'd)	

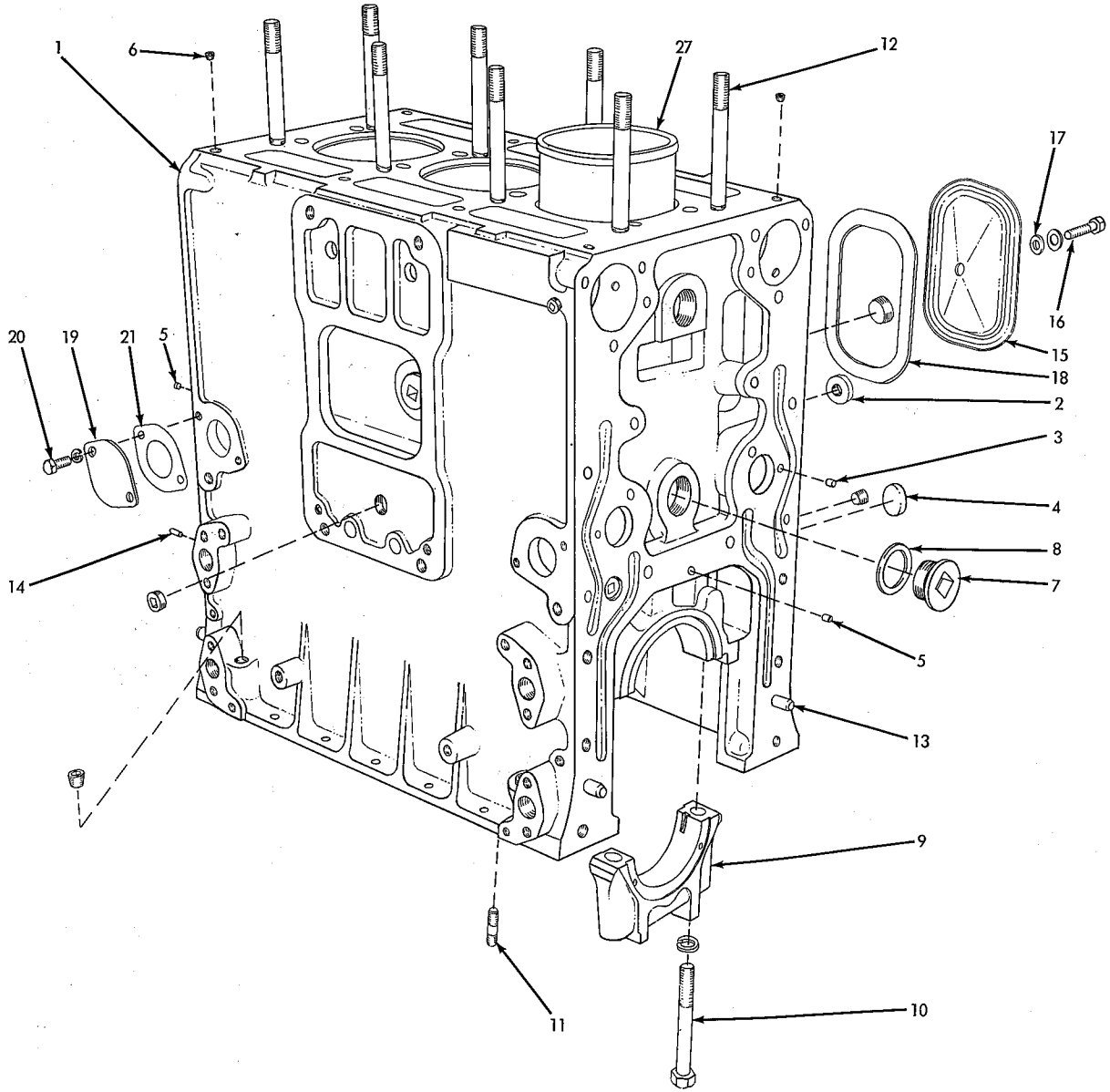

CYLINDER BLOCK

CYLINDER BLOCK

ITEM	PART NUMBER	QUANTITY AD3	QUANTITY AD4	DESCRIPTION	KIT NUMBER
1	5193107	1	-	BLOCK ASSEMBLY, cylinder (Incl. items 3, 4, 5, 7 thru 14, 27A & all PLUGS indented below)(When req. f/eng. prior #3A-8330 also, furnish 1 GASKET SET 5193116)	
	5193108	-	1	BLOCK ASSEMBLY, cylinder (Incl. items 3, 4, 5, 7 thru 14, 27A & all PLUGS indented below)(When req. f/eng. prior #4A-19529, also furnish 1 GASKET SET 5193117)	
	910230	8	9	PLUG, pipe, slotted-hd., 1/8"NPT	
	911081	6	6	PLUG, pipe, slotted-hd., 1/4"NPT	
	904260	1	1	PLUG, pipe, ctsk-hd., 3/8"NPT	
	904223	1	1	PLUG, pipe, ctsk-hd., 1/2"NPT	
	904224	1	2	PLUG, pipe, ctsk-hd., 3/4"NPT	
	901666	4	6	PLUG, pipe, ctsk-hd., 1"NPT	
2	5154082	1	1	PLUG, plain, cylinder block (1-1/4" diam., 1/4"NPT hole)	
3	5154319	3	3	PLUG, plain, cylinder block (1/4" diam. x 5/16" long)	
4	5150014	1	1	PLUG, cup, cylinder block (1-1/4" diam.)	
5	5150130	2	2	PLUG, cup, cylinder block (5/16" diam.)	
6	5151122	4	-	PLUG, cup (3/8" diam.)(Superseded by PLUG 910230 in late engines)	
	910230	4	4	PLUG, pipe, slotted-hd., 1/8"NT (Superseded PLUG 5151122) (Used prior #3A-8330 & #4A-19529)	
7	901666	4	4	PLUG, pipe, ctsk-hd., 1"NPT (Used on engines prior to #3A-4870 and #4A-6769)	
	5178998	4	4	PLUG, cylinder block (Started with engines #3A-4870 and #4A-6769)	
8	5178997	4	4	GASKET, cylinder block plug (Started with engines #3A-4870 and #4A-6769)	
9	5151414	4	-	CAP, main bearing (Used on engines prior to #371-6418)	
	5158674	4	5	CAP, main bearing (Started with engine #371-6418)	
10	5151154	8	-	STUD (5-1/4" long)(Engines prior to #371-6418)	
	-------	8	10	STUD (5-3/8" long)(Engines #371-6418 thru #3A-4259 and engines prior to #4A-4781. Order BOLT 5152149 and LOCKWASHER 904209)	
	5150572	8	10	NUT (5/8"NF castle) } Engines prior to	
	900806	8	10	PIN, cotter, 1/8" x 1" } #3A-4260 and #4A-4781	
	5152149	8	10	BOLT (5/8"NC x 4-3/4") } Started with engines	
	904209	8	10	LOCKWASHER, 5/8" } #3A-4260 and #4A-4781	
11	-------	2	2	STUD, oil pump attaching (See OIL PUMP)	
12	-------	8	10	STUD, cylinder head (See CYLINDER HEAD)	
13	-------	4	4	PIN, dowel (See FLYWHEEL HOUSING and CYLINDER BLOCK FRONT COVERS)	
14	-------	4	4	PIN, dowel, rear main bearing thrust washer (See CRANKSHAFT AND FLYWHEEL)	
15	5153117	3	4	*COVER, handhole	
16	5153139	2	3	*BOLT, front covers (3/8"NC x 2-1/4")	
	041251	1	1	STUD, rear cover (3/8"NC x 3/8"NF x 4-3/8")(Also attaches oil filter bracket)	
	911041	1	1	NUT, 3/8"NF (rear cover stud)	
	911115	3	4	*WASHER, plain, SAE std., 3/8"	
17	040400	3	4	*GASKET (copper)	058034, 37
18	5150020	3	4	*GASKET, handhole cover	058034, 37
19	5150023	1	1	COVER, water hole	
20	045312	2	2	CAPSCREW, 5/16"NC x 3/4"	
	904205	2	2	LOCKWASHER, 5/16"	
21	5150024	1	1	GASKET, water hole cover	058034, 37

(Continued)

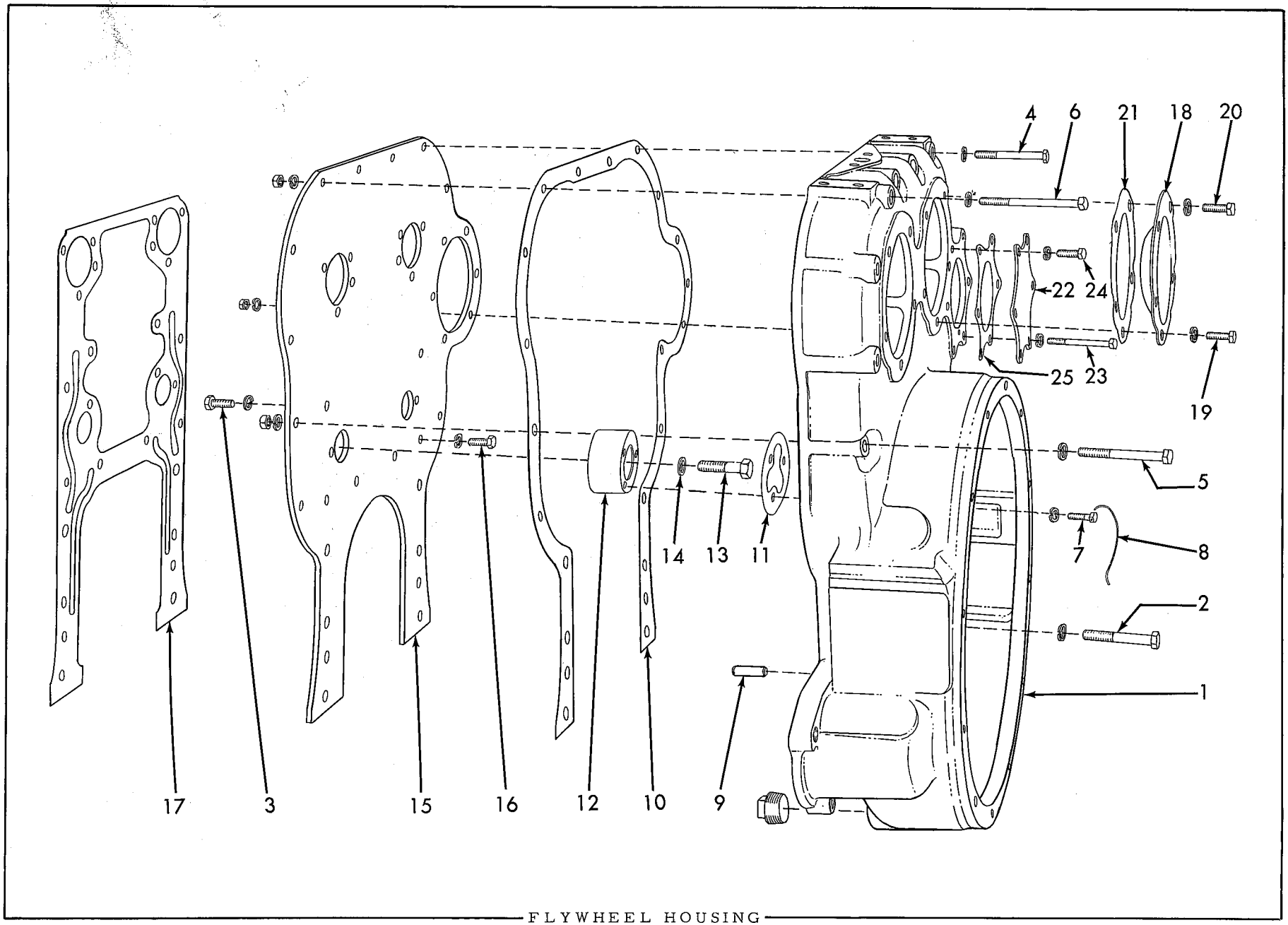

FLYWHEEL HOUSING

CYLINDER BLOCK (Cont'd)

ITEM	PART NUMBER	QUANTITY AD3	QUANTITY AD4	DESCRIPTION	KIT NUMBER
27	------	3	4	LINER, cylinder (See PISTON AND CONNECTING ROD)	
				*One less of each used on tractors equipped with Air Heater System.	
	5184484	3	4	INSERT, cyl. liner supporting (Used on Eng. #3A-8330 & up, and #4A-19529 and up)	

FLYWHEEL HOUSING

ITEM	PART NUMBER	QUANTITY AD3	QUANTITY AD4	DESCRIPTION	KIT NUMBER
1	5179971	1	1	HOUSING ASSEMBLY, flywheel (Includes PLUG 912726 and crankshaft SEAL 5150846)	
	912726	1	1	PLUG, pipe, 3/4"NPT	
2	041917	6	6	CAPSCREW, 1/2"NC x 3-1/4"	
	904208	6	6	LOCKWASHER, 1/2"	
3	035439	2	2	CAPSCREW, 3/8"NC x 1"	
	904206	2	2	LOCKWASHER, 3/8"	
4	042265	3	3	CAPSCREW, 3/8"NF x 3-1/4"	
	904206	3	3	LOCKWASHER, 3/8"	
5	041911	2	2	CAPSCREW, 3/8"NF x 3-1/2"	
	911041	2	2	NUT, hex, 3/8"NF	
	904206	2	2	LOCKWASHER, 3/8"	
6	041959	3	3	CAPSCREW, 3/8"NF x 4-1/4"	
	911041	3	3	NUT, hex, 3/8"NF	
	904206	3	3	LOCKWASHER, 3/8"	
7	5177709	6	6	CAPSCREW (drilled head, 3/8"NC x 1")	
	911115	6	6	WASHER, plain, SAE std., 3/8"	
8	5159493	2	2	WIRE, locking (7-1/4" long)	
9	5151576	2	2	PIN, dowel	
10	5150054	1	1	GASKET, flywheel housing	058034, 37
11	5150055	2	2	GASKET, flywheel housing (Used on engines prior to #3A-3024 and #4A-3129)	058034, 37
12	5150277	1	1	SPACER ASSEMBLY, housing to end plate (Includes dowel PIN)(Used on engines prior to #3A-3024 and #4A-3129)	
	5192568	1	1	SPACER ASSEMBLY, housing to end plate (Includes dowel PIN, 3 CAPSCREWS 5177709, 3 WASHERS 911115 and 1 WIRE 5159493)(Started with engines #3A-3024 and #4A-3129)	
13	AM-8801	1	1	CAPSCREW, 1/2"NC x 2"	
14	5167714	1	1	WASHER, plain	
15	5150060	1	1	PLATE, end, cylinder block	
16	035439	6	6	CAPSCREW, 3/8"NC x 1"	
	904206	6	6	LOCKWASHER, 3/8"	
17	5177798	1	1	GASKET, cylinder block end plate	058034, 37
18	5159469	2	2	COVER, flywheel housing	
19	043886	2	2	CAPSCREW, 7/16"NC x 1"	
	904207	2	2	LOCKWASHER, 7/16"	
20	035220	8	8	CAPSCREW, 1/2"NC x 1-1/8"	
	904208	8	8	LOCKWASHER, 1/2"	
21	5150059	2	2	GASKET, cover	058034, 37
22	5154669	1	1	COVER, star	
23	040426	4	4	CAPSCREW, 3/8"NF x 5"	
	911041	4	4	NUT, 3/8"NF	
	904206	4	4	LOCKWASHER, 3/8"	
24	035439	2	2	CAPSCREW, 3/8"NC x 1"	
	904206	2	2	LOCKWASHER, 3/8"	
25	5150057	1	1	GASKET, star cover	058034, 37

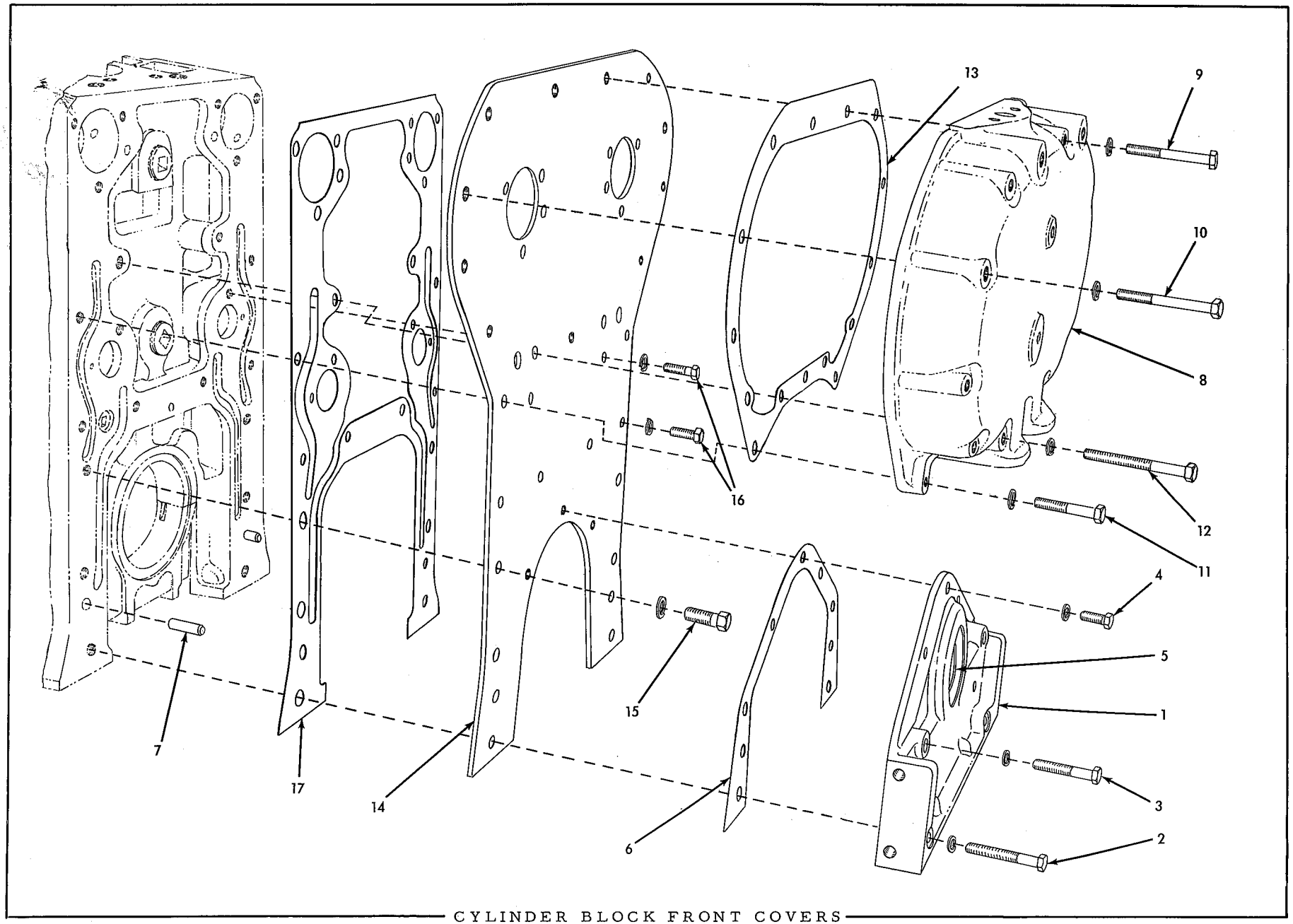

CYLINDER BLOCK FRONT COVERS

CYLINDER BLOCK FRONT COVERS

ITEM	PART NUMBER	QUANTITY AD3	QUANTITY AD4	DESCRIPTION	KIT NUMBER
1	5153372	1	-	COVER ASSEMBLY, crankshaft (Incl. item 5)(Graders prior to #328)	
	5190948	1	1	COVER ASSEMBLY, crankshaft (Incl. item 5)(Started with grader #327 but later disc. on engines #3A-021 & #471-31684)	
	5175932	1	1	COVER ASSEMBLY, crankshaft (Incl. item5)(Started with Eng. #3A-021 and #471-31684)(But later disc. on Eng. 3A-9869 & 4A-25052)	
	5184577	1	1	COVER ASSY., crankshaft (Incl. item 5) (Started w/Eng. 3A-9869 & 4A-25052	
2	035712	2	2	CAPSCREW, 1/2"NC x 4-1/4" (Graders prior to #328)	
	012871	2	2	CAPSCREW, 1/2"NC x 2-3/4"(Started w/Graders #328 & up) (But later disc. on Eng. 3A-9869 & 4A-25052)	
	904208	2	2	LOCKWASHER, 1/2"	
	028979	2	2	CAPSCREW, 1/2"NC x 2-1/2" (Started w/Eng. #3A-9869 & 4A-25052)	
3	035712	2	2	CAPSCREW, 1/2"NC x 2-1/4"	
	904208	2	2	LOCKWASHER, 1/2"	
4	036032	3	3	CAPSCREW, 3/8"NF x 3/4"	
	904206	3	3	LOCKWASHER, 3/8"	
5	------	1	1	SEAL, oil (See CRANKSHAFT AND FLYWHEEL)	
6	5150181	1	1	GASKET, crankshaft cover.	058034, 37
7	5151576	2	2	PIN, dowel	
8	5150410	1	1	COVER, balance weight	
9	041913	10	10	CAPSCREW, 3/8"NF x 2-7/8"	
	904206	10	10	LOCKWASHER, 3/8"	
10	041913	1	1	CAPSCREW, 3/8"NF x 2-7/8" (Used on engines prior to #371-29836 and #471-28611)	
	042265	1	1	CAPSCREW, 3/8"NF x 3-1/4" (Also attaches water by-pass tube clip. Started with engines #371-29836 and #471-28611)	
	904206	1	1	LOCKWASHER, 3/8"	
11	041914	2	2	CAPSCREW, 3/8"NC x 1-7/8"	
	904206	2	2	LOCKWASHER, 3/8"	
12	041915	2	2	CAPSCREW, 3/8"NC x 3-1/2"	
	904206	2	2	LOCKWASHER, 3/8"	
13	5150071	1	1	GASKET, balance weight cover.	058034, 37
14	5152878	1	1	PLATE, end, cylinder block	
15	035220	2	2	CAPSCREW, 1/2"NC x 1-1/8"	
	904208	2	2	LOCKWASHER, 1/2"	
16	035439	6	6	CAPSCREW, 3/8"NC x 1"	
	904206	6	6	LOCKWASHER, 3/8"	
17	5177798	1	1	GASKET, end plate.	058034, 37

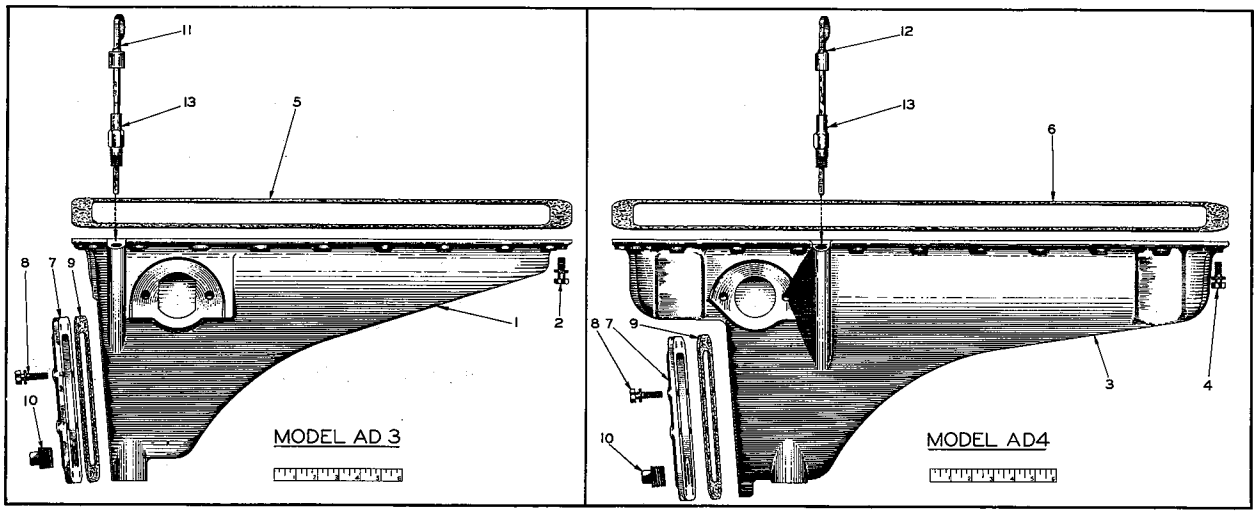

PLATE 1755A—OIL PAN

OIL PAN

ITEM	PART NUMBER	QUANTITY AD3	QUANTITY AD4	DESCRIPTION	KIT NUMBER
1	5154504	1	-	PAN, oil (Graders prior to #328)(Not illustrated)	
	5168178	1	-	PAN, oil (Graders after #327)	
2	045295	22	-	CAPSCREW, 5/16"NC x 1"	
	904205	22	-	LOCKWASHER, 5/16"	
3	5174150	-	1	PAN, oil	
4	045295	-	26	CAPSCREW, 5/16"NC x 1"	
	904205	-	26	LOCKWASHER, 5/16"	
5	5150115	1	-	GASKET, oil pan	058034, 36
6	5150116	-	1	GASKET, oil pan	058037, 38
7	5154506	1	1	COVER, handhole	
8	037450	8	8	CAPSCREW, 5/16"NC x 1-1/4"	
	904205	8	8	LOCKWASHER, 5/16"	
9	5154507	1	1	GASKET, handhole cover	
10	912726	1	1	PLUG, pipe, square head, 3/4"NPT	
11	5174690	1	-	DIPSTICK, oil level gauge (When required for engines prior to #3A-2203 also order GUIDE 5174687)	
12	5174693	-	1	DIPSTICK, oil level gauge	
13	5152528	1	-	GUIDE, oil level gauge dipstick (Used on engines prior to #3A-2203)	
	5174687	1	1	GUIDE, oil level gauge dipstick (Started with engine #3A-2203)	

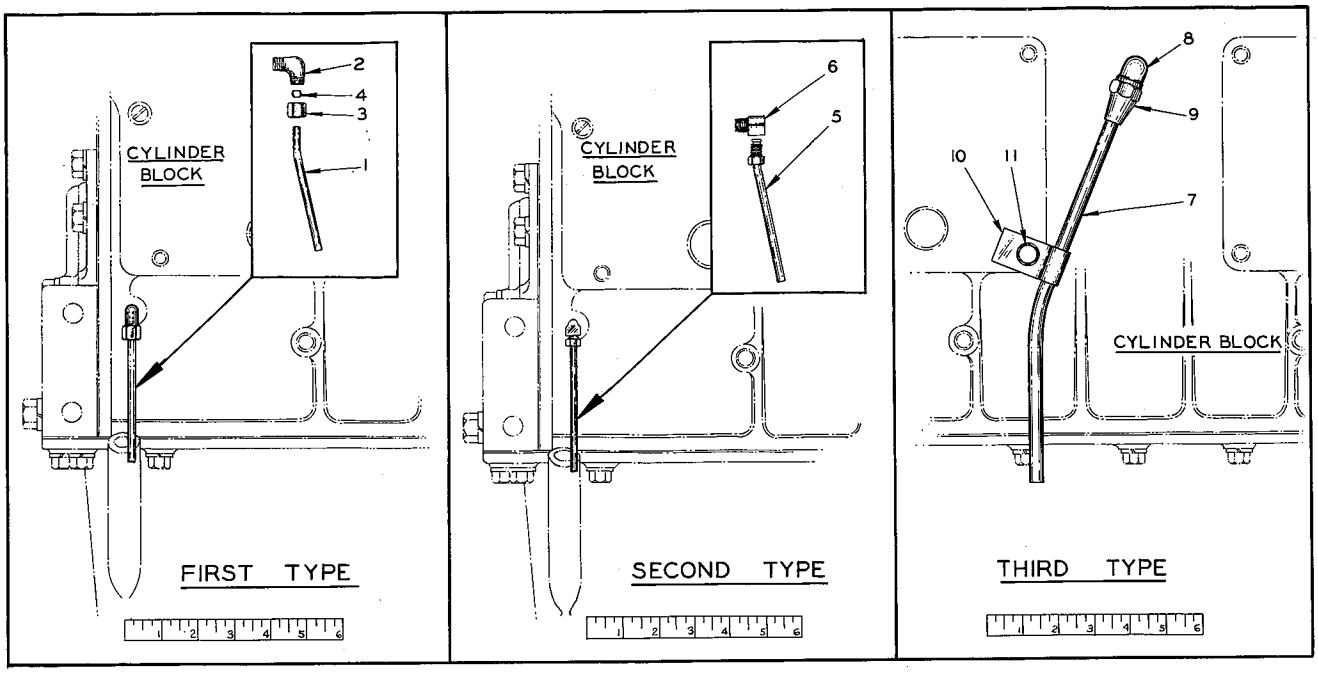

PLATE 1721—AIR BOX DRAIN

AIR BOX DRAIN
(See Plate 1721)

ITEM	PART NUMBER	QUANTITY AD3	QUANTITY AD4	DESCRIPTION	KIT NUMBER
				FIRST TYPE - Used on engines prior to #371-1458	
1	------	2	-	TUBE (3/16"O. D.)(Order CHANGEOVER KIT 051584)	
2	910129	2	-	ELBOW, male, compression, 90°, 3/16" tube, 1/8"NPT	
3	912064	2	-	NUT, compression fitting, 3/16" tube	
4	912367	2	-	SLEEVE, compression fitting, 3/16" tube	
				SECOND TYPE - Started with engine #371-1458 and used thru grader serial #327.	
5	------	2	-	TUBE ASSEMBLY (3/16"O. D. Includes NUT)(Order CHANGE-OVER KIT 051584)	
6	914094	2	-	ELBOW, male, inverted flare, 90°, 3/16" tube, 1/8"NPT	
				THIRD TYPE - Used on graders serial #328 and up	
7	048245	1	1	TUBE (3/8"O. D.)	051584
8	910978	1	1	ELBOW, male, flared, 90°, 3/8" tube, 1/4"NPT.	051584
9	911198	1	1	NUT, flared, short, 3/8" tube	051584
10	043030	1	1	CLIP, drain tube (single, closed type, 3/8" diam., 9/16" bolt hole)	051584
11	043886	1	1	CAPSCREW, 7/16"NC x 1-1/2"	
	904207	1	1	LOCKWASHER, 7/16"	

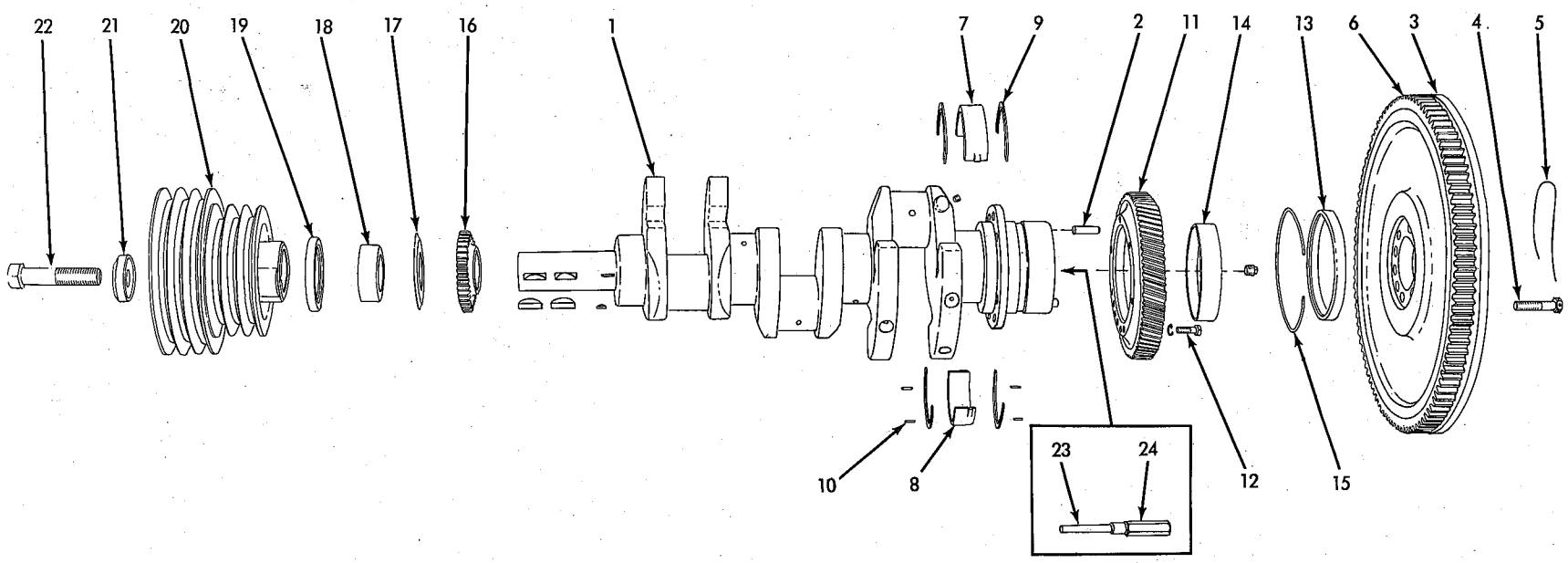

CRANKSHAFT AND FLYWHEEL

CRANKSHAFT AND FLYWHEEL

ITEM	PART NUMBER	QUANTITY AD3	QUANTITY AD4	DESCRIPTION	KIT NUMBER
1	5184215	1	-	CRANKSHAFT ASSEMBLY (Includes 3 PLUGS 910230 and 2 PINS 5150069)	
	5182941	-	1	CRANKSHAFT ASSEMBLY (Includes 4 PLUGS 910230 and 2 PINS 5150069)	
	910230	3	4	PLUG, pipe, slotted-hd., 1/8"NPT	
	901652	1	1	PLUG, pipe, sq-hd., 1/4"NPT (Graders #328 and up)	
2	5177528	2	2	PIN, dowel, flywheel to crankshaft	
3	5153847	1	-	FLYWHEEL ASSEMBLY (Includes item 6)(Graders prior to #328)	
	5169343	1	1	FLYWHEEL ASSEMBLY (Includes item 6)(Graders #328 and up)	
4	5150454	6	-	BOLT (2-7/8" long)(Graders prior to #328)	
	5150458	6	6	BOLT (2-1/4" long)(Graders #328 and up)	
5	023633	3	3	WIRE, locking (1/16" x 12")	
6	5153779	1	1	GEAR, flywheel ring	
7	5179631	4	5	SHELL, main bearing - upper (standard size)	052676 5192874
	5192880	4	5	SHELL, main bearing - upper (.002" undersize)	5192875
	5192884	4	5	SHELL, main bearing - upper (.010" undersize)	052677 5192876
	5192888	4	5	SHELL, main bearing - upper (.020" undersize)	052678 5192877
	5192892	4	5	SHELL, main bearing - upper (.030" undersize)	052679 5192878
8	5179630	4	5	SHELL, main bearing - lower (standard size)	052676 5192874
	5192879	4	5	SHELL, main bearing - lower (.002" undersize)	5192875
	5192883	4	5	SHELL, main bearing - lower (.010" undersize)	052677 5192876
	5192887	4	5	SHELL, main bearing - lower (.020" undersize)	052678 5192877
	5192891	4	5	SHELL, main bearing - lower (.030" undersize)	052679 5192878
				NOTE: Items 9 and 10 were used on all engines except serial Nos. 371-1261 thru 371-8476, which were equipped with flanged type rear main bearing shells having integral thrust faces.	
9	5159353	4	4	WASHER, thrust, rear main bearing (Half only.Standard size)	052676, 77 052678, 79
	5160542	4	4	WASHER, thrust, rear main bearing (Half only - .005" oversize)	
10	040398	4	4	PIN, dowel, rear main bearing thrust washer (brass)	
11	5150516	1	-	GEAR, crankshaft (62 teeth, 41° helix)(Engines prior to #371-3858)	
	5173330	1	1	GEAR, crankshaft (78 teeth, 19° helix)(Started with engine #371-3858)	
12	5150271	6	6	BOLT (3/8"NF x 1-3/16")	
	904206	6	6	LOCKWASHER, 3/8"	

(Continued)

ITEM	PART NUMBER	QUANTITY AD3	QUANTITY AD4	DESCRIPTION	KIT NUMBER
13	5150846	1	1	SEAL, oil - rear (4-11/16" shaft diam. Original equipment)	
	5192776	1	1	SEAL, oil - rear (4-13/16" shaft diam. For use when crankshaft is too worn to permit use of standard SEAL 5150846. Also order SLEEVE 5192775 to make initial installation)	
14	5192775	1	1	SLEEVE, crankshaft (Provides new seal surface for worn crankshafts. Requires use of SEAL 5192776)	
15	5192496	-	-	SPACER, oil seal (Use as required behind SEAL 5150846 when crankshaft has groove worn too deep to allow seal to function in its normal position)	
16	------	1	-	SPROCKET, oil pump drive (Early units)(See OIL PUMP)	
	------	1	1	GEAR, oil pump drive (Late units)(See OIL PUMP)	
	------	1	1	KEY, #9 woodruff, 3/16" x 3/4"	
17	5150175	1	-	SLINGER, oil	
	5150174	-	1	SLINGER, oil	
18	5153713	1	-	SPACER, front oil seal	
	5151420	-	1	SPACER, front oil seal	
19	5153373	1	-	SEAL, oil - front (Graders prior to #328)	
	5151392	1	1	SEAL, oil - front (Graders #328 and up)	
20	604112	1	-	PULLEY, crankshaft	
	061203	-	1	PULLEY, crankshaft	
	911201	2	2	KEY, #E woodruff, 3/8" x 1-1/4"	
21	053669	1	1	WASHER, pulley retaining	
22	073424	1	-	CAPSCREW, 1"NF x 4"	
	5153623	-	1	CAPSCREW, crankshaft (1"NF x 2-1/4")	
23	040835	1	-	WICK, oiling, clutch shaft pilot bearing (Graders prior to #328)	
24	040834	1	-	HOLDER, oiling wick (Graders prior to #328)	

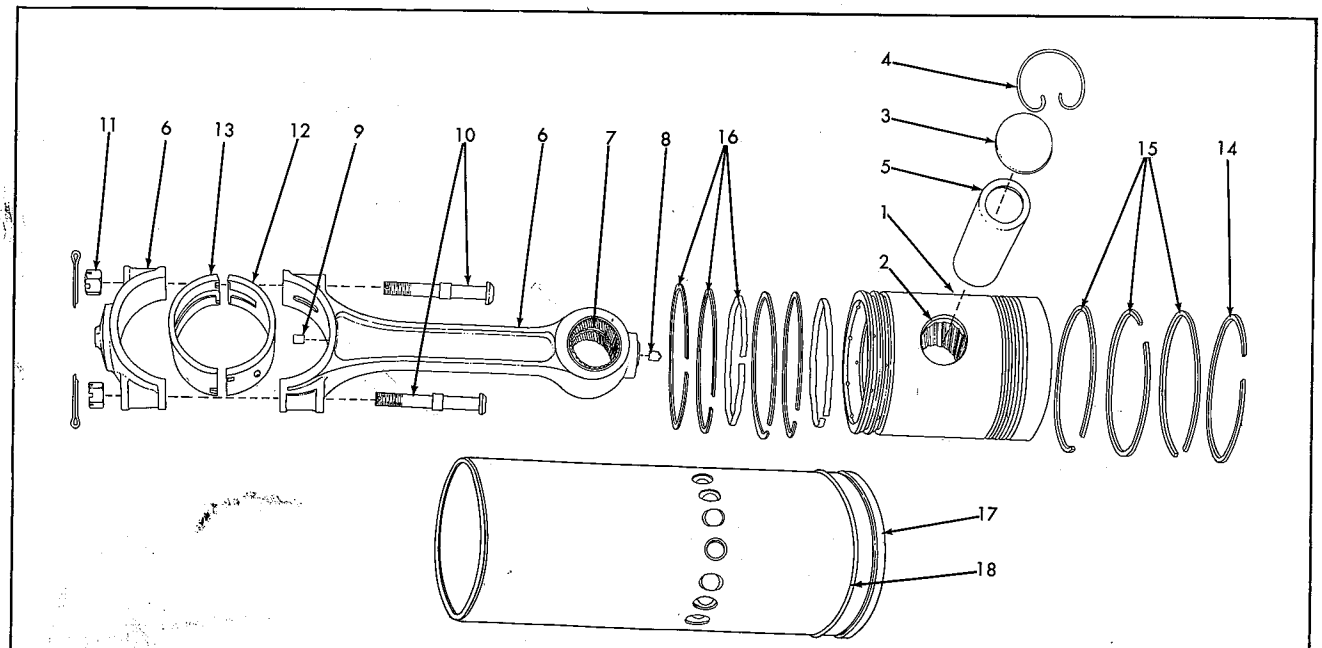

PISTON, CONNECTING ROD AND CYLINDER LINER

PISTON, CONNECTING ROD, AND CYLINDER LINER

ITEM	PART NUMBER	QUANTITY AD3	QUANTITY AD4	DESCRIPTION	KIT NUMBER
1	5171524	3	4	PISTON ASSEMBLY (Includes items 2 thru 4)	5192747
2	-------	6	8	BUSHING, piston (Not serviced separately)	
3	5153592	6	8	RETAINER, piston pin (Standard)	
	5192497	6	8	RETAINER, piston pin (.010" oversize. Copper-plated)	
4	5153562	6	8	RING, snap, piston pin retainer	
5	5153590	3	4	PIN, piston	5192747
6	5154332	3	4	ROD ASSEMBLY, connecting (Includes items 7 thru 11)	
7	5151350	6	8	BUSHING, connecting rod	
8	5150140	3	4	NOZZLE, spray, connecting rod	
9	5154360	3	4	ORIFICE, connecting rod	
10	5150094	6	8	BOLT, connecting rod	
11	5150095	6	8	NUT	
--	900801	6	8	PIN, cotter, 3/32" x 3/4"	
12	5179632	3	4	SHELL, connecting rod bearing - upper (standard size)	5192895
	5192881	3	4	SHELL, connecting rod bearing - upper (.002" undersize)	5192896
	5192885	3	4	SHELL, connecting rod bearing - upper (.010" undersize)	5192897
	5192889	3	4	SHELL, connecting rod bearing - upper (.020" undersize)	5192898
	5192893	3	4	SHELL, connecting rod bearing - upper (.030" undersize)	5192899
13	5179633	3	4	SHELL, connecting rod bearing - lower (standard size)	5192895
	5192882	3	4	SHELL, connecting rod bearing - lower (.002" undersize)	5192896
	5192886	3	4	SHELL, connecting rod bearing - lower (.010" undersize)	5192897
	5192890	3	4	SHELL, connecting rod bearing - lower (.020" undersize)	5192898
	5192894	3	4	SHELL, connecting rod bearing - lower (.030" undersize)	5192899
14	5177186	3	4	RING, compression, top groove (chrome plated)	5192743
15	5160303	9	12	RING, compression (plain)	5192743
16	5179836	6	8	RING, oil control (3-piece type)	5192743
17	5171520	3	4	LINER, cylinder	5192747
18	2190595	-	-	SHIM, cylinder liner (.0015" thick. Use as req'd)	
	5192226	-	-	SHIM, cylinder liner (.003" thick. Use as req'd)	

NOTE: In view of the removable-sleeve construction of these engines, oversize pistons or rings are not supplied. When appreciable wear occurs new standard size parts should be installed.

Oversize piston pins are not available. New standard size pins and bushings should be installed when appreciable wear occurs.

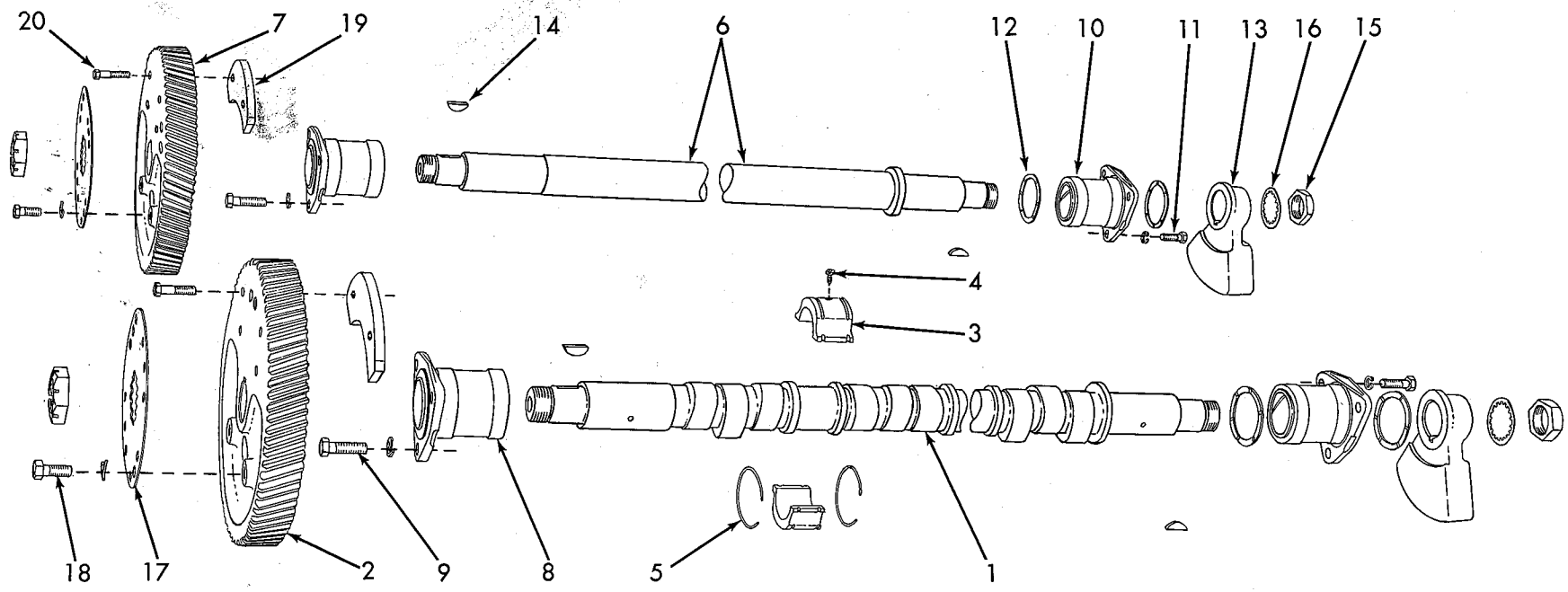

CAMSHAFT AND BALANCE SHAFT

CAMSHAFT AND BALANCE SHAFT

ITEM	PART NUMBER	QUANTITY AD3	QUANTITY AD4	DESCRIPTION	KIT NUMBER
1	5151983	1	-	CAMSHAFT	
	5151986	-	1	CAMSHAFT	
2	5150379	1	-	GEAR, camshaft (62 teeth, 41° left helix)(Used on engine prior to #371-3858)	
	5176457	1	1	GEAR, camshaft (78 teeth, 19° left helix)(Started with engines #371-3858. Also furnish 4 CAPSCREWS 036034 to assure fit on early units)	
3	5150025	4	6	BEARING, half - intermediate (standard size)(Used prior Eng. #3A-8330 & #4A-19529)	
	5193125	2	3	BEARING SET, intermediate (Std. size, 1 upper half & 1 lower half) (Used on Eng. #3A-8330 & 4A-19529 & up)	
	5192587	4	6	BEARING, half- intermediate (.010" undersize)(Used prior Eng. #3A-8330 & 4A-19529)	
	5184171	2	3	BEARING SET, intermediate (.010" undersize), 1 upper half and 1 lower half)(Used on Eng. #3A-8330 & #4A-19529 & up)	
4	5150027	2	3	BOLT, locking, intermediate bearing (15/32"lg.)(Used prior Eng. #3A-8330 & #4A-19529)	
	5183584	2	3	BOLT, locking, intermediate bearing (23/32" lg.)(Used on Eng. # 3A-8330 & #4A-19529 & up)	
5	5150026	4	6	RING, retaining, intermediate bearing	
6	5158671	1	-	SHAFT, balance	
	5158672	-	1	SHAFT, balance	
7	5150380	1	-	GEAR, balance shaft (62 teeth, 41° right helix)(Used on engines prior to #371-3858)	
	5176458	1	1	GEAR, balance shaft (78 teeth, 19° right helix)(Started with engine #371-3858. Also furnish 4 CAPSCREWS 036034 to assure fit on early units)	
				NOTE: Each BEARING ASSEMBLY listed below includes bronze bushings which are not serviced separately.	
8	5153951	2	-	BEARING ASSEMBLY - rear end (standard size)(Used on engines prior to #371-4702)	
	5158922	2	2	BEARING ASSEMBLY - rear end (standard size)(Started with engine #371-4702)	
	5192589	2	2	BEARING ASSEMBLY - rear end (.010" undersize)	
	5192590	2	2	BEARING ASSEMBLY - rear end (.020" undersize)	
9	013058	6	6	CAPSCREW, 3/8"NC x 1-1/4"	
	904206	6	6	LOCKWASHER, 3/8"	
10	5158922	2	2	BEARING ASSEMBLY - front end (standard size)(When required for engines prior to #371-4702 also furnish 2 WASHERS 5158917)	
	5192589	2	2	BEARING ASSEMBLY - front end (.010" undersize)	
	5192590	2	2	BEARING ASSEMBLY - front end (.020" undersize)	
11	013058	6	6	CAPSCREW, 3/8"NC x 1-1/4"	
	904206	6	6	LOCKWASHER, 3/8"	
12	5158917	4	4	WASHER, thrust (Standard size)(Started with engine #371-4702)	
	5192232	4	4	WASHER, thrust (.010" oversize)	
13	5153000	2	-	WEIGHT, balance - front	
	5153001	-	2	WEIGHT, balance - front	
14	5153914	4	4	KEY, woodruff	
15	5150087	4	4	NUT (1-1/8"NF)	
16	5177769	2	2	LOCKWASHER, internal teeth, 1-1/8" (front nut only)	
17	5172734	2	2	RETAINER, rear nut	
18	5172740	8	8	BOLT, shoulder (5/16"NF)(Engines prior to #3A-045 and #4A-007)	
	036034	8	8	CAPSCREW, 3/8"NF x 1" (Engines after #3A-044 and #4A-006)	
	904206	8	8	LOCKWASHER, 3/8"	
19	5150089	-	2	WEIGHT, balance - rear	
20	U-3188	-	4	CAPSCREW, 3/8"NF x 1-1/2"	

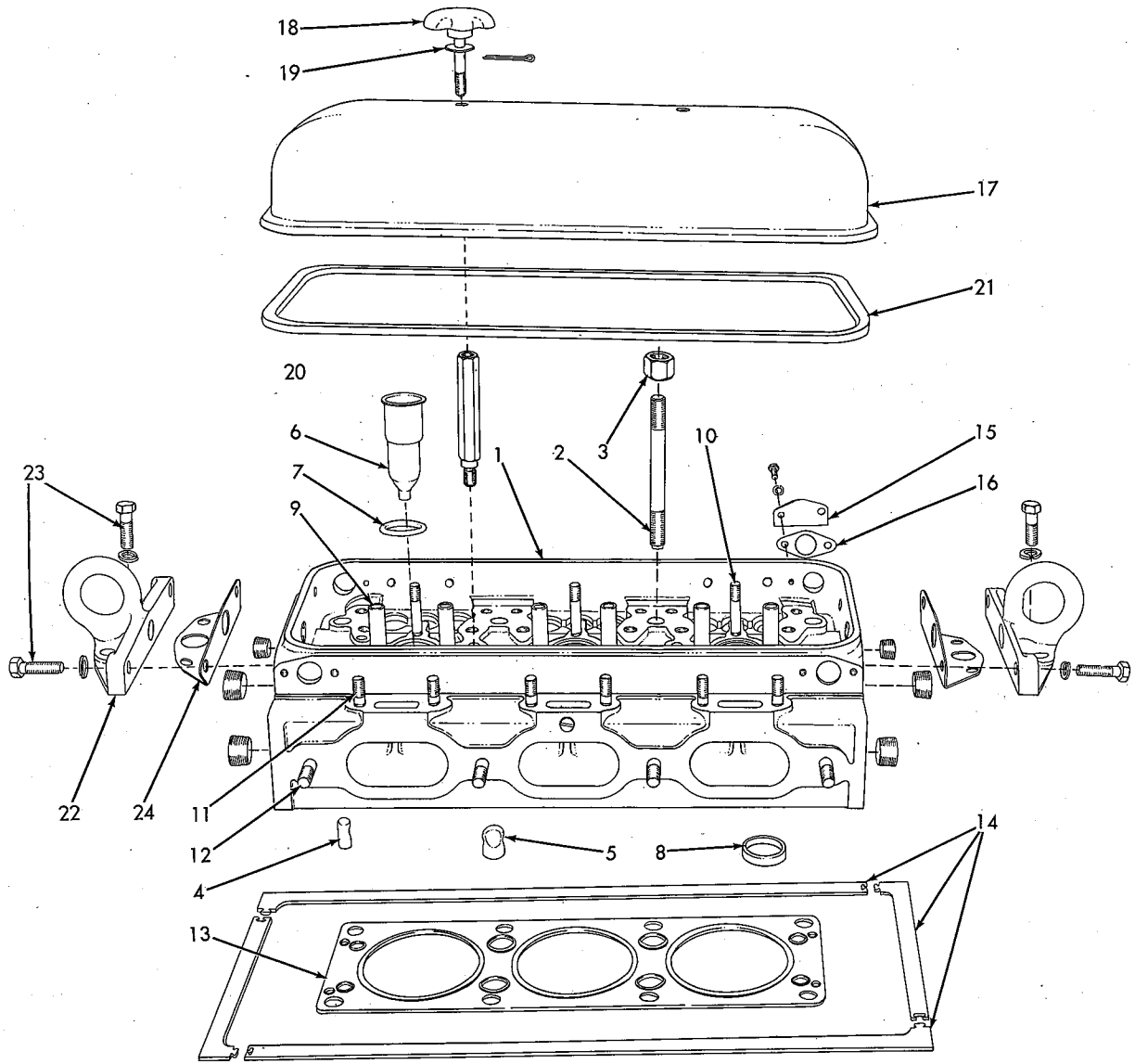

CYLINDER HEAD AND ROCKER COVER

CYLINDER HEAD AND ROCKER COVER

ITEM	PART NUMBER	QUANTITY AD3	QUANTITY AD4	DESCRIPTION	KIT NUMBER
1	5151265	1	-	HEAD ASSEMBLY, cyl. (Incl. items 4 thru 12, & PLUGS indented below)(Used Prior Eng. # 3A-8330)	
	5185342	1	-	HEAD ASSY., cyl. (Incl. items 4 thru 12, & PLUGS indented below) (Used on Eng. #3A-8330 & up f/30°valves)	
	5151266	-	1	HEAD ASSEMBLY, cyl. (Incl. items 4 thru 12, & PLUGS indented below)(Used prior Eng. #4A-19529)	
	5185343	-	1	HEAD ASSY., cyl. (Incl. items 4 thru 12 & PLUGS indented below) (Used on Eng. #4A-19529 & up f/30° VALVES)	
	904260	2	2	PLUG, pipe, ctsk-hd., 3/8"NPT	
	904224	4	4	PLUG, pipe, ctsk-hd., 3/4"NPT	
2	5151159	8	10	STUD (5/8"NC x 5/8"NF x 5-3/4")(Used prior #3A-8330 & #4A-19529)	
3	5150013	8	10	NUT (5/8"NF)	
	5183329	8	10	STUD, (5/8"NC x 5/8"NF x 6-3/8")(Used Eng. #3A-8330 & up #4A-19529 & up)	
4	5172874	4	4	NOZZLE, water - single jet	
5	5172875	4	6	NOZZLE, water - double jet	
6	5150041	3	4	TUBE, injector hole	
7	5160037	3	4	PACKING, injector hole tube	
8	-------	6	8	INSERT, exhaust valve (See VALVE MECHANISM)	
9	-------	6	8	GUIDE, exhaust valve (See VALVE MECHANISM)	
10	-------	3	4	STUD, injector clamp (See FUEL INJECTOR)	
11	-------	6	8	STUD, water manifold (See RADIATOR AND WATER MANIFOLD)	
12	-------	4	5	STUD, exhaust manifold (See EXHAUST MANIFOLD AND MUFFLER)	
13	5150043	1	-	GASKET, cylinder head(Used prior #3A-8330 & #4A-19529)	058034, 35, 36
	5150044	-	1	GASKET, cylinder head (Used prior #3A-8330 & #4A-19529)	058037, 38, 39
14	5192918	1	-	GASKET SET, oil cyl. head (Consists of 4 pieces) (Used prior Eng. #3A-8330 & #4A-19529)	058034, 35, 36
	5192919	-	1	GASKET SET, oil cyl. head (Consists of 4 pieces) (Used prior Eng. #3A-8330 & #4A-19529)	058037, 38, 39
15	5150268	3	3	COVER, cylinder head hole	
	905655	6	6	CAPSCREW, 1/4"NC x 1/2"	
	904204	6	6	LOCKWASHER, 1/4"	
16	5150269	3	3	GASKET, hole cover	058034, 35, 36 058037, 38, 39
17	5150381	1	-	COVER, rocker	
	5178406	-	1	COVER, rocker	
18	5150330	2	2	BOLT, retaining, rocker cover (6" long)(Used on engines prior to #3A-5994 and #4A-10131)	
	5157194	2	2	BOLT, retaining, rocker cover (2-5/16" long)(Started with engines #3A-5994 and #4A-10131)	
	900806	2	2	PIN, cotter, 1/8" x 1"	
19	5150333	2	2	WASHER, rocker cover bolt	
20	5157192	2	2	STUD, rocker cover bolt (Started with engines #3A-5994 and #4A-10131)	
21	5150327	1	-	GASKET, rocker cover	058034, 35, 36
	5150328	-	1	GASKET, rocker cover	058034, 35, 36
22	5150050	2	2	BRACKET, engine lifting	
23	040011	8	8	CAPSCREW, 7/16"NC x 1-1/2"	
	904207	8	8	LOCKWASHER, 7/16"	
24	5150052	2	2	GASKET, engine lifting bracket	058034, 35, 36 058037, 38, 39

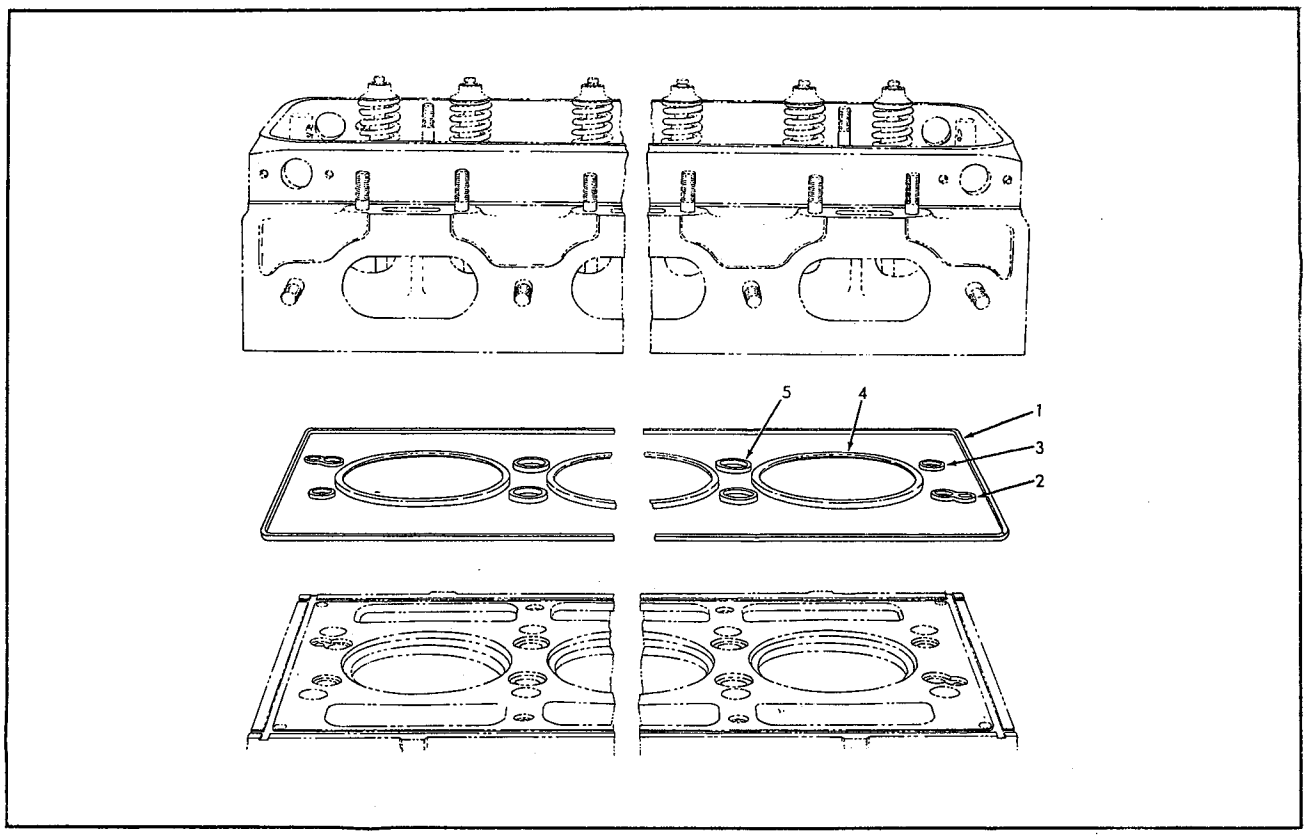

NEW TYPE CYLINDER HEAD GASKET ARRANGEMENT

USAGE: Started with engines #3A-8330 and #4A-19529

* 3-cylinder engine
** 4-cylinder engine

ITEM	PART NUMBER	QUANTITY *	QUANTITY **	DESCRIPTION	KIT NUMBER *	KIT NUMBER **
1	5183948	1	-	RING, head oil seal (rubber)	074688, 5193116	
	5183476	-	1	RING, head oil seal (rubber)	- -	074689, 5193117
2	5183305	2	2	GASKET, water and oil holes (rubber)	074688, 5193116	074689, 5193117
3	5170881	2	2	RING, end water hole (rubber)	074688, 5193116	074689, 5193117
4	5183330	3	4	GASKET, cylinder (metal)	074688, 5193116	074689, 5193117
5	5184301	4	6	RING, water hole (rubber)	074688, 5193116	074689, 5193117
	074688	1	-	GASKET SET, engine major overhaul		

NOTE: Components are identical to those in GASKET SET 058034 except following:

OMITTED:

1	5150043	GASKET, cylinder head
2	5150055	GASKET, flywheel housing
1	5153059	PACKING, governor shut-off shaft
1	5165221	GASKET, governor cap
1	5192918	GASKET SET, oil, cylinder head
1	5226029	GASKET, fuel pump valve screw
2	5230018	GASKET, fuel pump body

(Continued)

(Added August, 1951)

ITEM	PART NUMBER	QUANTITY *	QUANTITY **	DESCRIPTION
				ADDED:
			1	5159457 SEAL (Not A-C. Discard)
			2	5170881 RING, end water hole
			1	5172865 SEAL, blower drive shaft cover
			2	5183305 GASKET, water and oil holes
			3	5183330 GASKET, cylinder
			1	5183948 RING, head oil seal
			4	5184301 RING, water hole
	074689	-	1	GASKET SET, engine major overhaul
				NOTE: Components are identical to those in GASKET SET 058037 except following:
				OMITTED:
			1	040095 WASHER, fan spindle (cork)
			1	040097 GASKET, fan spindle washer
			1	040100 GASKET, fan
			1	5150044 GASKET, cylinder head
			2	5150055 GASKET, flywheel housing
			1	5153059 PACKING, governor shut-off shaft
			1	5165221 GASKET, governor cap
			1	5168176 GASKET, oil filling tube adapter
			1	5192919 GASKET SET, oil, cylinder head
			1	5226029 GASKET, fuel pump valve screw
			2	5230018 GASKET, fuel pump body
				ADDED:
			1	057916 GASKET, oil cooler water connection
			1	5159457 SEAL (Not A-C. Discard)
			2	5170881 RING, end water hole
			1	5172865 SEAL, blower drive shaft cover
			2	5183305 GASKET, water and oil holes
			4	5183330 GASKET, cylinder
			1	5183476 RING, head oil seal
			6	5184301 RING, water hole
	5193116	1	-	GASKET SET, cylinder head
				NOTE: Components are identical to those in GASKET SET 058035 except following:
				OMITTED:
			1	3222555 GASKET, water manifold cover
			1	5150043 GASKET, cylinder head
			1	5155816 GASKET, water by-pass tube
			1	5192918 GASKET SET, oil
				ADDED:
			2	5170881 RING, end water hole
			2	5183305 GASKET, water and oil holes
			3	5183330 GASKET, cylinder
			1	5183948 RING, head oil seal
			4	5184301 RING, water hole
	5193117	-	1	GASKET SET, cylinder head
				NOTE: Components are identical to those in GASKET SET 058039 except following:
				OMITTED:
			1	3222555 GASKET, water manifold cover
			1	5150044 GASKET, cylinder head
			1	5155816 GASKET, water by-pass tube
			1	5192919 GASKET SET, oil
				ADDED:
			2	5170881 RING, end water hole
			2	5183305 GASKET, water and oil holes
			4	5183330 GASKET, cylinder
			1	5183476 RING, head oil seal
			6	5184301 RING, water hole

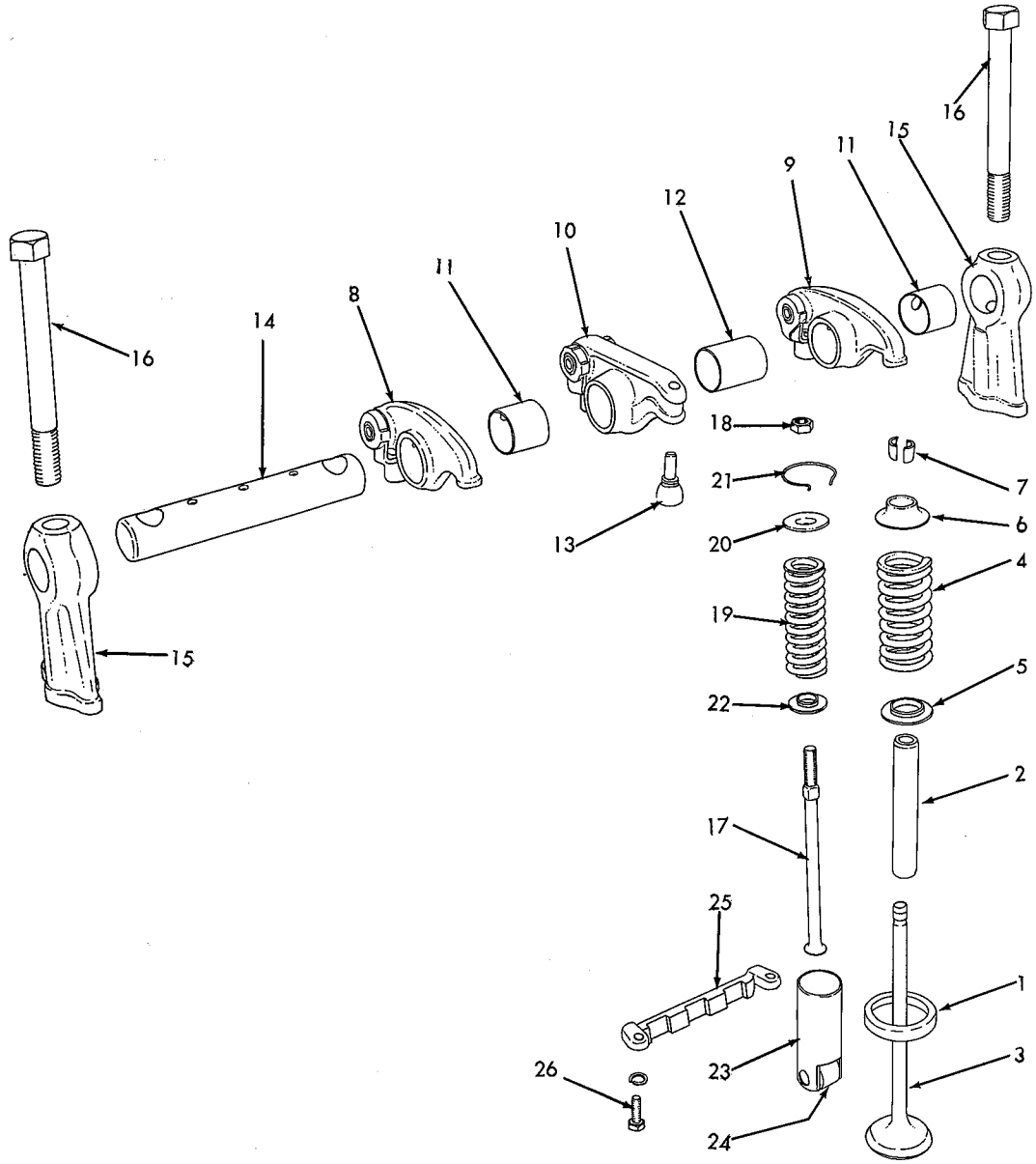

VALVE MECHANISM

VALVE MECHANISM

ITEM	PART NUMBER	QUANTITY AD3	QUANTITY AD4	DESCRIPTION	KIT NUMBER
1	5178540	6	8	INSERT, exhaust valve (45° SEAT)(Used Eng. prior #3A-8330 & #4A-19529)	
	5185326	6	8	INSERT, exhaust valve (30° SEAT)(Used on Eng. #3A-8330 & #4A-19529 & up)	
2	5178590	6	8	GUIDE, exhaust valve (standard size)	
	5192717	6	8	GUIDE, exhaust valve (.016" oversize on O. D. Use for replacement of loose guides. Requires that cylinder head be reamed)	
3	5192718	6	8	VALVE KIT, exhaust (1 VALVE & 2 LOCKS 069171)(45°FACE)(Used prior Eng. #3A-8180 & #4A-19529)	
	5193197	6	8	VALVE KIT, exhaust (30°FACE)(1 VALVE & 2LOCKS 069171)(Used on Eng. #3A-8180 & #4A-19529 & up)	
4	5150289	6	8	SPRING, exhaust valve	
5	5150292	6	8	SEAT, valve spring	
6	5150291	6	8	CAP, valve spring	
7	5150290	12	16	LOCK, valve spring seat (For double-groove valve stem. Used on engines prior to #371-29836 and #471-28558)	
	069171	12	16	LOCK, valve spring seat (For single-groove valve stem) (Started with engines #371-29836 and #471-28558)	
8	5150304	3	4	ARM ASSEMBLY, valve rocker - left (Includes item 11. Clevis parts are not serviced separately)	
9	5150305	3	4	ARM ASSEMBLY, valve rocker - right (Includes item 11. Clevis parts are not serviced separately)	
10	5150315	3	4	ARM ASSEMBLY, injector rocker (Includes item 12)	
11	5150310	6	8	BUSHING, valve rocker arm (large)	
12	5150318	3	4	BUSHING, injector rocker arm (large)	
13	5150319	3	4	BALL ASSEMBLY, injector rocker arm (1 BALL, 1 SEAT)	
14	5150322	3	4	SHAFT, rocker	
15	5150324	6	8	BRACKET, rocker shaft	
16	5150325	6	8	BOLT (1/2"NC x 4-1/4", drilled for oil passage)	
17	5150299	9	12	ROD, push	
18	5151601	9	12	NUT, push rod locking (5/16"NF)	
19	5150301	9	12	SPRING, camshaft follower	
20	5150302	9	12	SEAT, camshaft follower spring - upper	
21	5150303	9	12	RETAINER, camshaft follower spring upper seat	
22	5150300	9	12	SEAT, camshaft follower spring - lower	
23	5159837	9	12	FOLLOWER ASSEMBLY, camshaft (Includes ROLLER and PIN. Also see item 24)	
24	5190348	9	12	ROLLER KIT, camshaft follower (Each consists of 1 ROLLER and 1 PIN. Roller BUSHING is not serviced separately)	
25	5150298	3	4	GUIDE, camshaft follower roller	
26	034964	6	8	CAPSCREW, 1/4"NC x 3/4"	
	904204	6	8	LOCKWASHER, 1/4"	

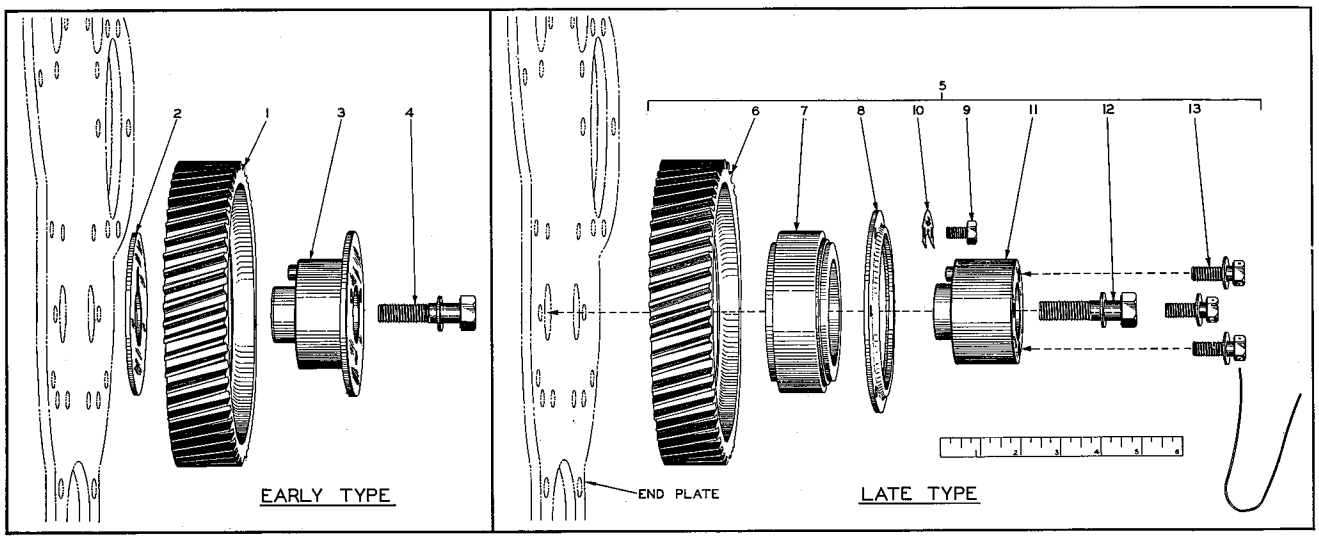

PLATE 1980——TIMING IDLER GEAR

TIMING IDLER GEAR

ITEM	PART NUMBER	QUANTITY AD3	QUANTITY AD4	DESCRIPTION	KIT NUMBER
				EARLY TYPE - Used on engines prior to serial No. 3A-3024 and 4A-3129.	
1	5152814	1	-	GEAR ASSEMBLY (Includes BUSHING which is not serviced separately. 54 teeth, 41° helix)(Used on engines prior to #371-3858)	
1	-------	1	1	GEAR ASSEMBLY (Includes BUSHING which is not serviced separately. 68 teeth, 19° helix)(Started with engine #371-3858. Order GEAR ASSEMBLY 5192569)	
2	5150273	1	1	SPACER, idler gear hub	
3	5150274	1	1	HUB ASSEMBLY, idler gear (Includes dowel PIN)	
4	AM-8801	1	1	CAPSCREW, 1/2"NC x 2"	
4	5167714	1	1	WASHER, plain	
				LATE TYPE - Started with engines serial No. 3A-3024 and 4A-3129.	
5	5192569	1	1	GEAR ASSEMBLY (Consists of items 6 thru 13)	
6	5176995	1	1	GEAR (68 teeth, left helix)	
7	7450082	1	1	BEARING, roller	
8	5176998	1	1	RETAINER, roller bearing	
9	065917	6	6	CAPSCREW, 5/16"NF x 1/2"	
10	5176999	3	3	LOCK, capscrew	
11	5176996	1	1	HUB ASSEMBLY, idler gear (Includes dowel PIN)	
12	AM-8801	1	1	CAPSCREW, 1/2"NC x 2"	
12	5167714	1	1	WASHER, plain	
13	-------	3	3	CAPSCREWS, attaching, flywheel housing	See FLYWHEEL HOUSING
13	-------	3	3	WASHERS, plain	See FLYWHEEL HOUSING
13	-------	1	1	WIRE, locking	See FLYWHEEL HOUSING

OILING SYSTEM

	PAGE NUMBER
Oil Cooler	35, 37
Oil Filler	41, 77
Oil Filter	40, 43
Oil Level Gauge Rod	14
Oil Pan	14
Oil Pressure Gauge	221, 223
Oil Pressure Regulator	39
Oil Pump	29, 31, 33
Transfer (oil filter)	142

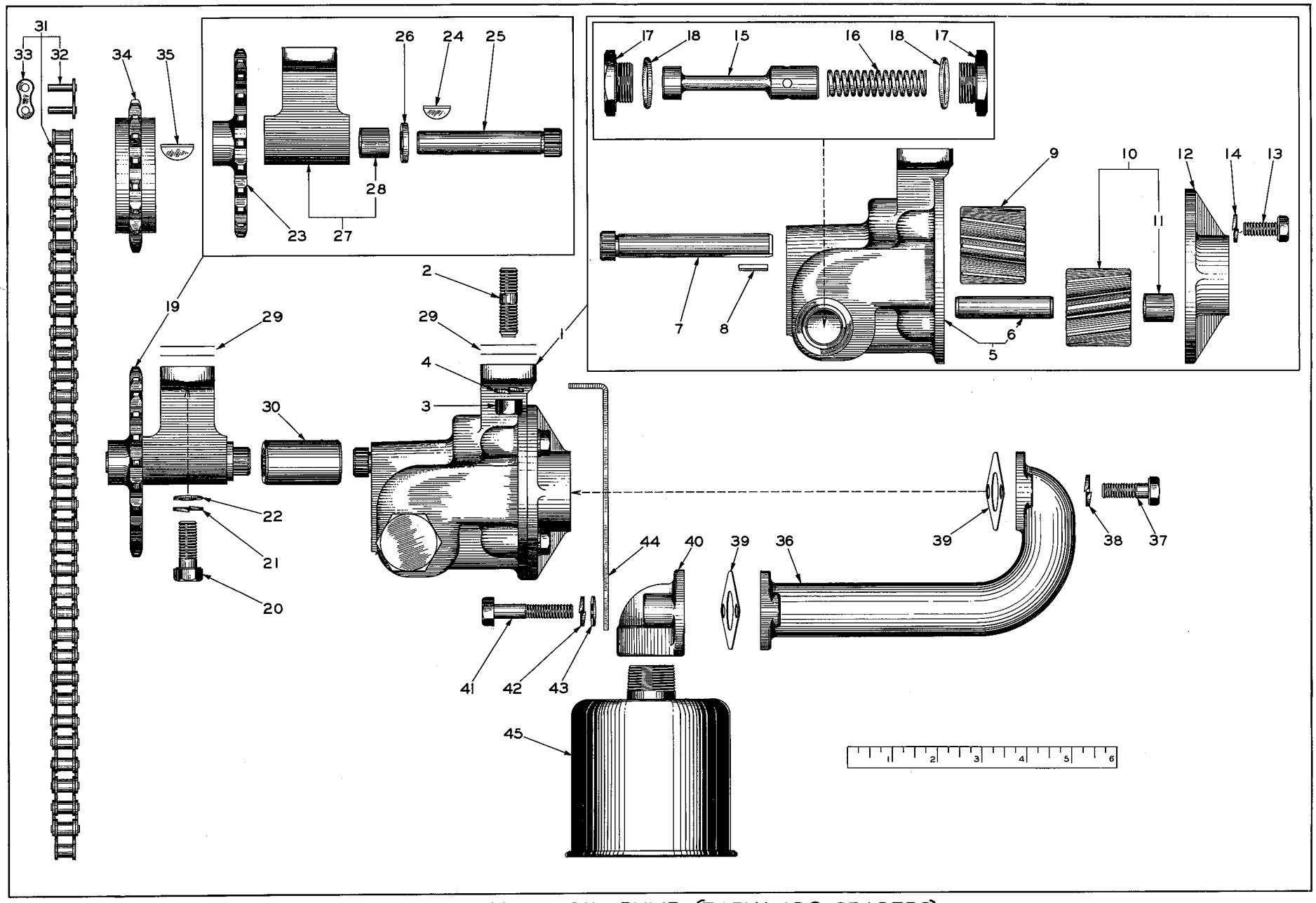

PLATE 1311A—OIL PUMP (EARLY AD3 GRADERS)

OIL PUMP
(See Plate 1311A)

USAGE: Model AD3 Graders prior to serial No. 328

ITEM	PART NUMBER	QTY.	DESCRIPTION	KIT NUMBER
1	5153874	1	PUMP ASSEMBLY, oil (Consists of items 5 thru 18)	
2	5150129	2	STUD (3/8"NF x 1-1/2")	
3	911041	2	NUT, 3/8"NF	
4	904206	2	LOCKWASHER, 3/8"	
5	5153553	1	BODY ASSEMBLY (Includes item 6)	
6	5151197	1	SHAFT, driven gear	
7	5152720	1	SHAFT, drive gear	
8	5152707	1	KEY, drive gear shaft	
9	5151187	1	GEAR, drive	
10	5153615	1	GEAR ASSEMBLY, driven (Includes item 11)	
11	5153616	2	BUSHING, driven gear	
12	5153626	1	COVER	
13	045312	4	CAPSCREW, 5/16"NC x 3/4"	
14	904205	4	LOCKWASHER, 5/16"	
15	5153247	1	VALVE, pressure relief	
16	5152617	1	SPRING, pressure relief valve	
17	5152613	2	PLUG, pressure relief valve	
18	040399	2	GASKET, pressure relief valve plug	058034
19	5152797	1	SHAFT ASSEMBLY, driven sprocket (Includes items 23 thru 28)	
20	036034	2	CAPSCREW, 3/8"NF x 1"	
21	904206	2	LOCKWASHER, 3/8"	
22	911115	2	WASHER, plain, SAE std., 3/8"	
23	5151218	1	SPROCKET, driven	
24	905121	1	KEY, #5 woodruff, 1/8" x 5/8"	
25	5152719	1	SHAFT, driven sprocket	
26	5152721	1	WASHER, sprocket shaft thrust	
27	5151206	1	SUPPORT ASSEMBLY, sprocket shaft (Includes item 28)	
28	5153616	2	BUSHING, sprocket shaft support	
29	5176119	-	SHIM, adjusting, driving chain (.005" thick. Use as required)	
30	5155026	1	SLEEVE, coupling	
31	5152992	1	CHAIN, driving (45 links. Includes items 32 and 33)	
32	5152993	1	LINK, connecting, driving chain	
33	5152994	1	BAR, side, driving chain connecting link	
34	5150334	1	SPROCKET, driving (on crankshaft)	
35	905123	1	KEY, #9 woodruff, 3/16" x 3/4"	
36	5154508	1	INLET, oil	
37	054130	2	CAPSCREW, 5/16"NC x 7/8"	
38	904205	2	LOCKWASHER, 5/16"	
39	5153627	2	GASKET, oil inlet	058034,36
40	5154509	1	SUPPORT, oil screen	
41	051473	2	CAPSCREW, 5/16"NC x 1-3/4"	
42	904205	2	LOCKWASHER, 5/16"	
43	910335	2	WASHER, plain, SAE std., 5/16"	
44	5154510	2	BRACKET, oil inlet supporting	
45	5154457	1	SCREEN, oil	

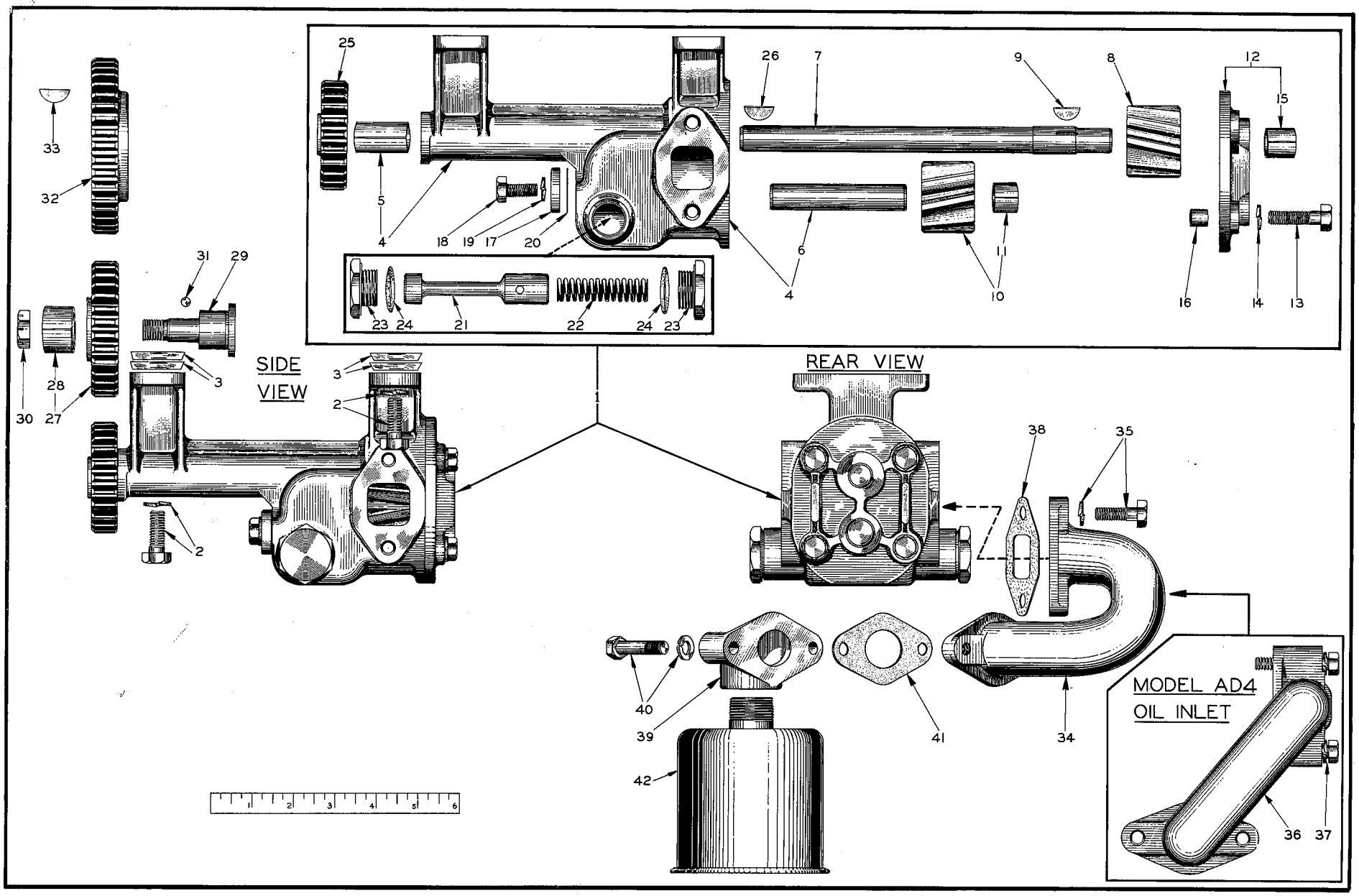

PLATE 1359A—OIL PUMP (AD3 AND AD4 GRADERS)

OIL PUMP
(See Plate 1359A)

USAGE: Started with Model AD3 Grader serial No. 328. Not used on engines after serial Nos. 3A-020 and 471-31683

ITEM	PART NUMBER	QUANTITY AD3	QUANTITY AD4	DESCRIPTION	KIT NUMBER
1	5168158	1	1	PUMP ASSEMBLY, oil (Consists of items 4 thru 26)	
2	036034	4	4	CAPSCREW, 3/8"NF x 1"	
	904206	4	4	LOCKWASHER, 3/8"	
3	5176119	-	-	SHIM, adjusting, driving gear mesh (.005" thick)(Use as req'd)	
4	5166694	1	1	BODY ASSEMBLY (Includes items 5 and 6)	
5	5153147	2	2	BUSHING, body	
6	5153310	1	1	SHAFT, driven gear	
7	5153309	1	1	SHAFT, drive gear	
8	5166650	1	1	GEAR, drive	
9	905121	1	1	KEY, #5 woodruff, 1/8" x 5/8"	
10	5166649	1	1	GEAR ASSEMBLY, driven (Includes item 11)	
11	5166840	2	2	BUSHING, driven gear	
12	5153299	1	1	COVER ASSEMBLY (Includes item 15)	
13	037450	4	4	CAPSCREW, 5/16"NC x 1-1/4"	
14	904205	4	4	LOCKWASHER, 5/16"	
15	5153154	1	1	BUSHING, cover	
16	5153301	2	-	DOWEL, cover (Used on engines built prior to February 1947 only)	
17	5156955	1	1	COVER, body pad	
18	045312	2	2	CAPSCREW, 5/16"NC x 3/4"	
19	904205	2	2	LOCKWASHER, 5/16"	
20	5151370	1	1	GASKET, pad cover	058034, 37
21	5153247	1	1	VALVE, pressure relief	
22	5155765	1	1	SPRING, pressure relief valve	
23	5152613	2	2	PLUG, pressure relief valve	
24	040399	2	2	GASKET, pressure relief valve plug	058034, 37
25	5156528	1	1	GEAR, driven (24 teeth)	
26	905121	1	1	KEY, #5 woodruff, 1/8" x 5/8"	
27	5156683	1	1	GEAR ASSEMBLY, driving - intermediate (30 teeth)(Includes item 28)	
28	5156521	1	1	BUSHING, intermediate driving gear	
29	5156520	1	1	SHAFT, intermediate driving gear	
30	052652	1	1	NUT (self-locking, 1/2"NF)	
31	912738	1	1	BALL, steel, 7/32" diam.	
32	5166821	1	-	GEAR, pump driving, on crankshaft (40 teeth.)	
	5156532	-	1	GEAR, pump driving, on crankshaft (40 teeth.)	
33	905123	1	1	KEY, #9 woodruff, 3/16" x 3/4"	
34	5167813	1	-	INLET, oil	
35	054130	2	-	CAPSCREW, 5/16"NC x 7/8"	
	904205	2	-	LOCKWASHER, 5/16"	
36	5174131	-	1	INLET, oil	
37	051473	-	2	CAPSCREW, 5/16"NC x 1-3/4"	
	904205	-	2	LOCKWASHER, 5/16"	
38	5153313	1	1	GASKET, oil inlet	058034, 36 058037, 38
39	5154509	1	1	SUPPORT, oil screen	
40	046321	2	2	CAPSCREW, 5/16"NC x 1-1/2"	
	904205	2	2	LOCKWASHER, 5/16"	
41	5153627	1	1	GASKET, oil screen support	058034, 36 058037, 38
42	5154457	1	1	SCREEN, oil	

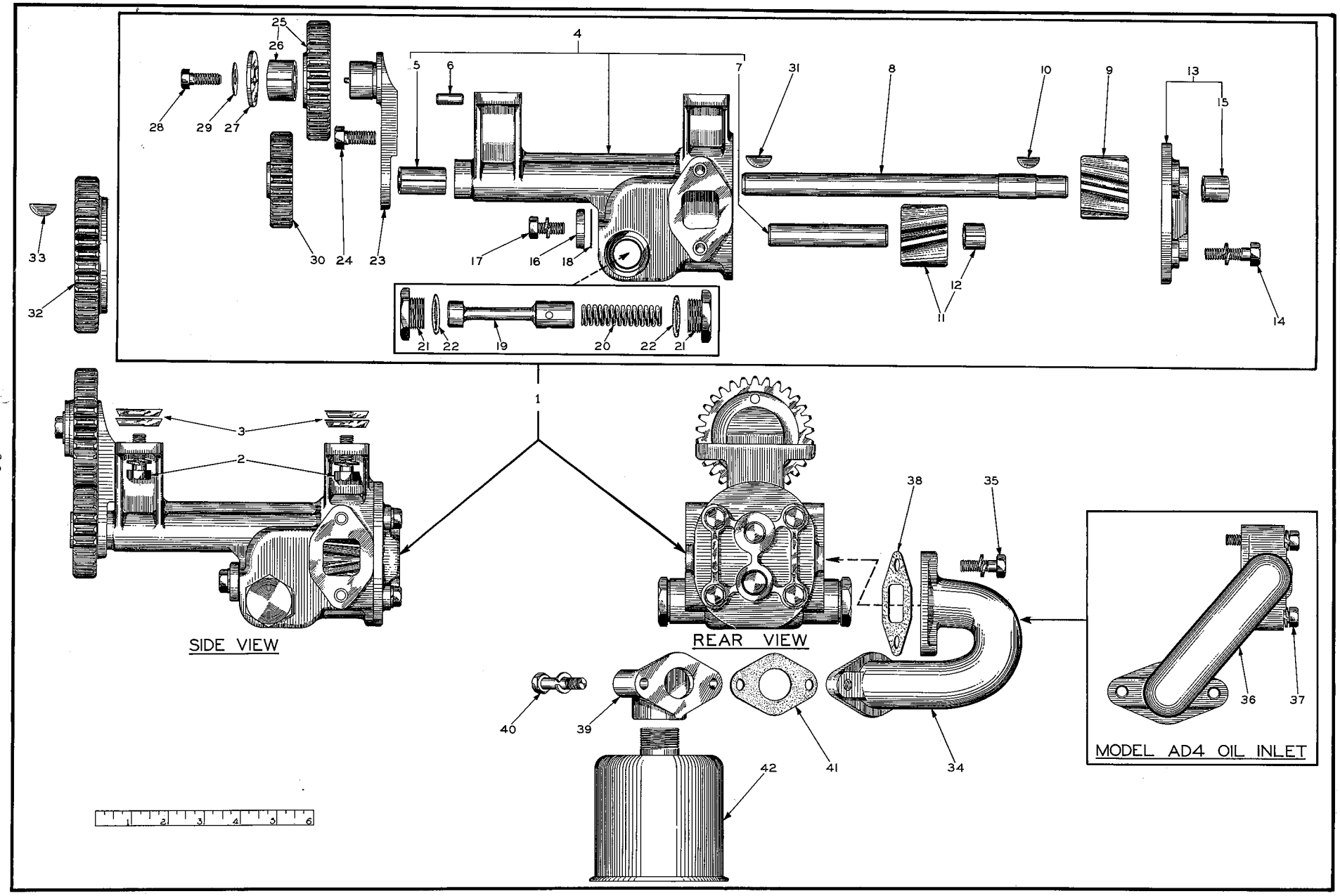

PLATE 1882——OIL PUMP

OIL PUMP
(See Plate 1882)

USAGE: Started with Engines serial Nos. 3A-021 and 471-31684

ITEM	PART NUMBER	QUANTITY AD3	QUANTITY AD4	DESCRIPTION	KIT NUMBER
1	5175982	1	1	PUMP ASSEMBLY (Consists of items 4 thru 31)	
2	036034	4	4	CAPSCREW, 3/8"NF x 1"	
	904206	4	4	LOCKWASHER, 3/8"	
3	5176119	-	-	SHIM, adjusting, driving gear mesh (.005" thick. Use as req'd)	
4	5175680	1	1	BODY ASSEMBLY (Includes items 5 thru 7)	
5	5153147	2	2	BUSHING, body	
6	5176035	1	1	PIN, dowel	
7	5153310	1	1	SHAFT, driven gear	
8	5153309	1	1	SHAFT, drive gear	
9	5166650	1	1	GEAR, drive	
10	905121	1	1	KEY, #5 woodruff, 1/8" x 5/8"	
11	5166649	1	1	GEAR ASSEMBLY, driven (Includes item 12)	
12	5166840	2	2	BUSHING, driven gear	
13	5153299	1	1	COVER ASSEMBLY (Includes item 15)	
14	037450	4	4	CAPSCREW, 5/16"NC x 1-1/4"	
	904205	4	4	LOCKWASHER, 5/16"	
15	5153154	1	1	BUSHING, cover	
16	5156955	1	1	COVER, body pad	
17	045312	2	2	CAPSCREW, 5/16"NC x 3/4"	
	904205	2	2	LOCKWASHER, 5/16"	
18	5151370	1	1	GASKET, pad cover	058034 058037
19	5153247	1	1	VALVE, pressure relief	
20	5155765	1	1	SPRING, pressure relief valve	
21	5152613	2	2	PLUG, pressure relief valve	
22	040399	2	2	GASKET, pressure relief valve plug	058034 058037
23	5169195	1	1	SUPPORT ASSEMBLY, driven gear (1SUPPORT, 1 PIN)	
24	065265	1	1	CAPSCREW, 3/8"NC x 7/8"	
25	5156683	1	1	GEAR ASSEMBLY, intermediate (30 teeth. Includes item 26)	
26	5156521	1	1	BUSHING, intermediate gear	
27	5169197	1	1	WASHER, retaining, intermediate gear	
28	054130	1	1	CAPSCREW, 5/16"NC x 7/8"	
29	5175944	1	1	WASHER, capscrew locking	
30	5156528	1	1	GEAR, driven (24 teeth)	
31	905121	1	1	KEY, #5 woodruff, 1/8" x 5/8"	
32	5166821	1	-	GEAR, pump driving (40 teeth. On crankshaft)	
	5156532	-	1	GEAR, pump driving (40 teeth. On crankshaft)	
33	905123	1	1	KEY, #9 woodruff, 3/16" x 3/4"	
34	5167813	1	-	INLET, oil	
35	054130	2	-	CAPSCREW, 5/16"NC x 7/8"	
	904205	2	-	LOCKWASHER, 5/16"	

(Continued)

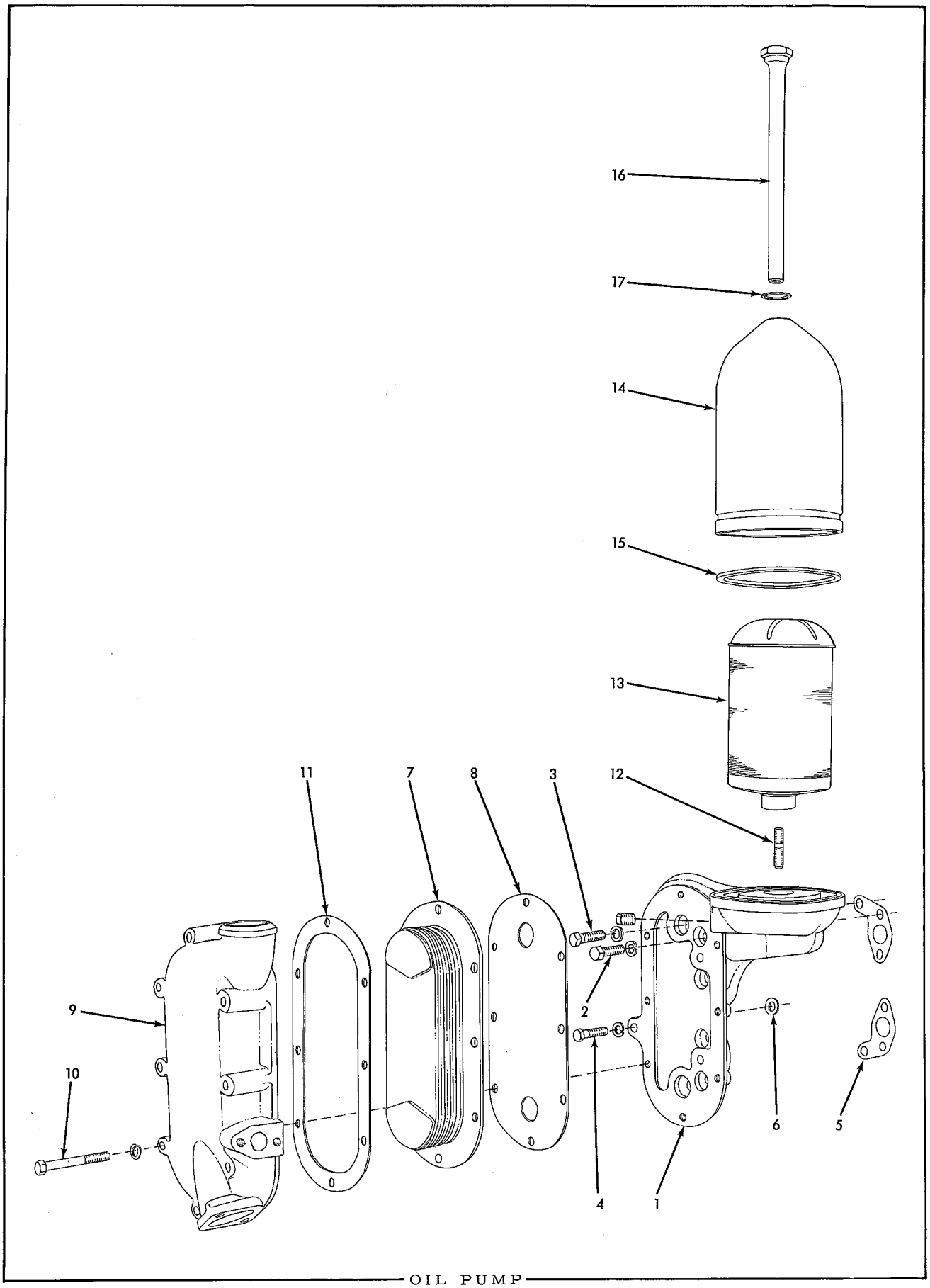

OIL PUMP

OIL PUMP (Cont'd)

ITEM	PART NUMBER	QUANTITY AD3	QUANTITY AD4	DESCRIPTION	KIT NUMBER
36	5174131	-	1	INLET, oil	
37	051473	-	2	CAPSCREW, 5/16"NC x 1-3/4"	
	904205	-	2	LOCKWASHER, 5/16"	
38	5153313	1	1	GASKET, oil inlet	058034,36 058037,38
39	5154509	1	1	SUPPORT, oil screen	
40	046321	2	2	CAPSCREW, 5/16"NC x 1-1/2"	
	904205	2	2	LOCKWASHER, 5/16"	
41	5153627	1	1	GASKET, oil screen support	058034,36 058037,38
42	5154457	1	1	SCREEN, oil	

OIL COOLER AND PRIMARY FILTER

USAGE: Model AD3 Graders prior to serial No. 328.

ITEM	PART NUMBER	QTY.	DESCRIPTION	KIT NUMBER
1	5153294	1	ADAPTER ASSEMBLY, oil cooler and filter (Includes item 12)	
	901652	1	PLUG, pipe, 1/4"NPT	
2	040382	4	CAPSCREW, 3/8"NC x 1-3/8"	
	904206	4	LOCKWASHER, 3/8"	
3	044249	2	CAPSCREW, 3/8"NC x 1-1/8"	
	904206	2	LOCKWASHER, 3/8"	
4	041914	1	CAPSCREW, 3/8"NC x 1-7/8"	
	904206	1	LOCKWASHER, 3/8"	
5	5150154	2	GASKET, adapter to cylinder block	058034,37
6	5152904	1	GASKET, spacing	058034,37
7	8501327	1	CORE, oil cooler (optional w/8518916)	
	8518916	1	CORE, oil cooler (copper type)(optional w/8501327)	
8	5154215	1	GASKET, oil cooler element	058034,37
9	5151456	1	HOUSING, oil cooler	
10	033751	8	CAPSCREW, 5/16"NC x 2-1/2"	
	904205	8	LOCKWASHER, 5/16"	
11	5150155	1	GASKET, oil cooler housing	058034,37
12	5153229	1	STUD, oil filter case retainer	
13	5159423	1	ELEMENT, oil filter	
14	8526	1	CASE, oil filter	
15	207046	1	GASKET, oil filter case	058034,37
16	5153046	1	RETAINER, oil filter case	
17	040395	1	GASKET, oil filter case retainer	058034,37

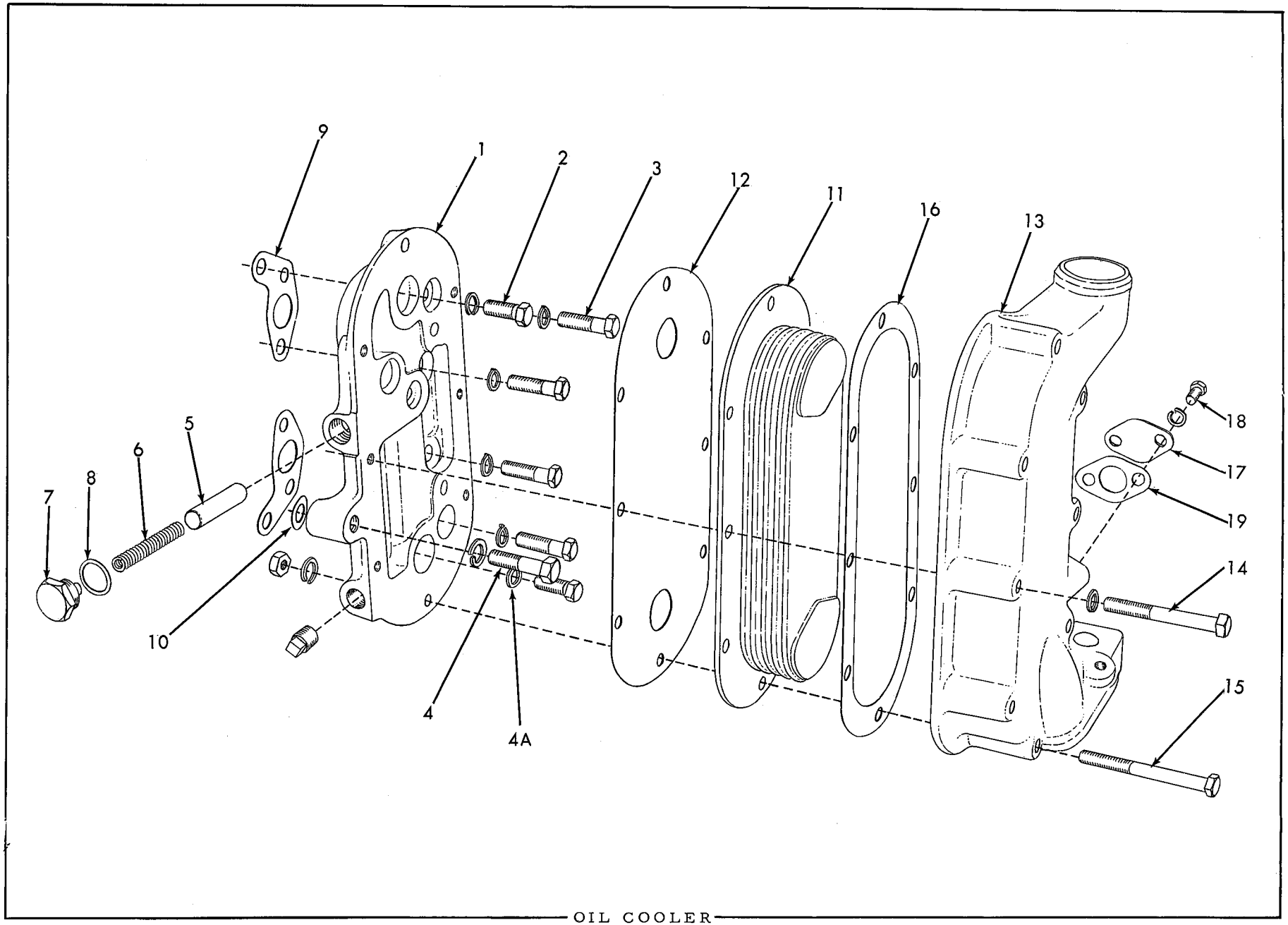

OIL COOLER

OIL COOLER

USAGE: Model AD4 Graders, and Model AD3 Graders serial No. 328 and up.

ITEM	PART NUMBER	QUANTITY AD3	QUANTITY AD4	DESCRIPTION	KIT NUMBER
1	5178244	1	1	ADAPTER ASSEMBLY (Includes items 5 thru 8, and 1 PLUG 901652)(When required for engines prior to #3A-4565 and #4A-5679 also order 4 CAPSCREWS 044249)	
	901652	1	1	PLUG, pipe, 1/4"NPT	
2	044249	2	2	CAPSCREW, 3/8"NC x 1-1/8"	
3	040382	4	4	CAPSCREW, 3/8"NC x 1-3/8" (Engines prior to #3A-4565 and #4A-5679)	
	044249	4	4	CAPSCREW, 3/8"NC x 1-1/8" (Started with engines #3A-4565 and #4A-5679)	
4	041914	1	1	CAPSCREW, 3/8"NC x 1-7/8"	
4A	5152148	1	1	WASHER, plain (copper)	
--	904206	6	6	LOCKWASHER, 3/8"	
5	5156769	1	1	VALVE, pressure relief (1/2" diam.)(Used on engines prior to #3A-4565 and #4A-5679)	
	5177777	1	1	VALVE, pressure relief (5/8" diam.)(Started with engines #3A-4565 and #4A-5679)	
6	5152381	1	1	SPRING, pressure relief valve (13/32"O. D.)(Used on engines prior to #3A-4565 and #4A-5679)	
	5177778	1	1	SPRING, pressure relief valve (15/32"O. D.)(Started with engines #3A-4565 and #4A-5679)	
7	5156782	1	1	PLUG, pressure relief valve (5/8"NF)(Used on engines prior to #3A-4565 and #4A-5679)	
	5177772	1	1	PLUG, pressure relief valve (18mm.)(Started with engines #3A-4565 and #4A-5679)	
8	5156768	1	1	GASKET, pressure relief valve (21/32" hole)(Used on engines prior to #3A-4565 and #4A-5679).	058034, 37
	5177773	1	1	GASKET, pressure relief valve (23/32" hole)(Started with engines #3A-4565 and #4A-5679).	058034, 37
9	5150154	2	2	GASKET, adapter to cylinder block	058034, 37
10	5152904	1	1	GASKET, spacing	058034, 37
11	8501327	1	-	CORE, oil cooling (5 plates)(optional w/8518916)	
	8518916	1	-	CORE, oil cooling (5 plates-copper type)(optional w/8501327)	
	8501328	-	1	CORE, oil cooling (6 plates)(optional w/8518912)	
	8518912	-	1	CORE, oil cooling (6 plates-copper type)(optional w/8501328)	
12	5154215	1	1	GASKET, oil cooling element.	058034, 37
13	5151456	1	-	HOUSING, oil cooler element	
	5150464	-	1	HOUSING, oil cooler element	
14	033751	6	-	CAPSCREW, 5/16"NC x 2-1/2"	
	913189	-	6	CAPSCREW, 5/16"NC x 2-7/8"	
	904205	6	6	LOCKWASHER, 5/16"	
15	043733	2	-	CAPSCREW, 5/16"NF x 3"	
	040378	-	2	CAPSCREW, 5/16"NC x 3-1/2"	
	913636	2	-	NUT, 5/16"NF	
	911025	-	2	NUT, 5/16"NC	
	904205	2	2	LOCKWASHER, 5/16"	
16	5150155	1	1	GASKET, oil cooler housing	058034, 37
17	5151305	1	1	COVER, water hole (Started with engines #371-29836 and #471-28611)	
18	045312	2	2	CAPSCREW, 5/16"NC x 3/4"	
	904205	2	2	LOCKWASHER, 5/16"	
19	5151190	1	1	GASKET, water hole cover (Started with engines #371-29836 and #471-28611).	058034, 37

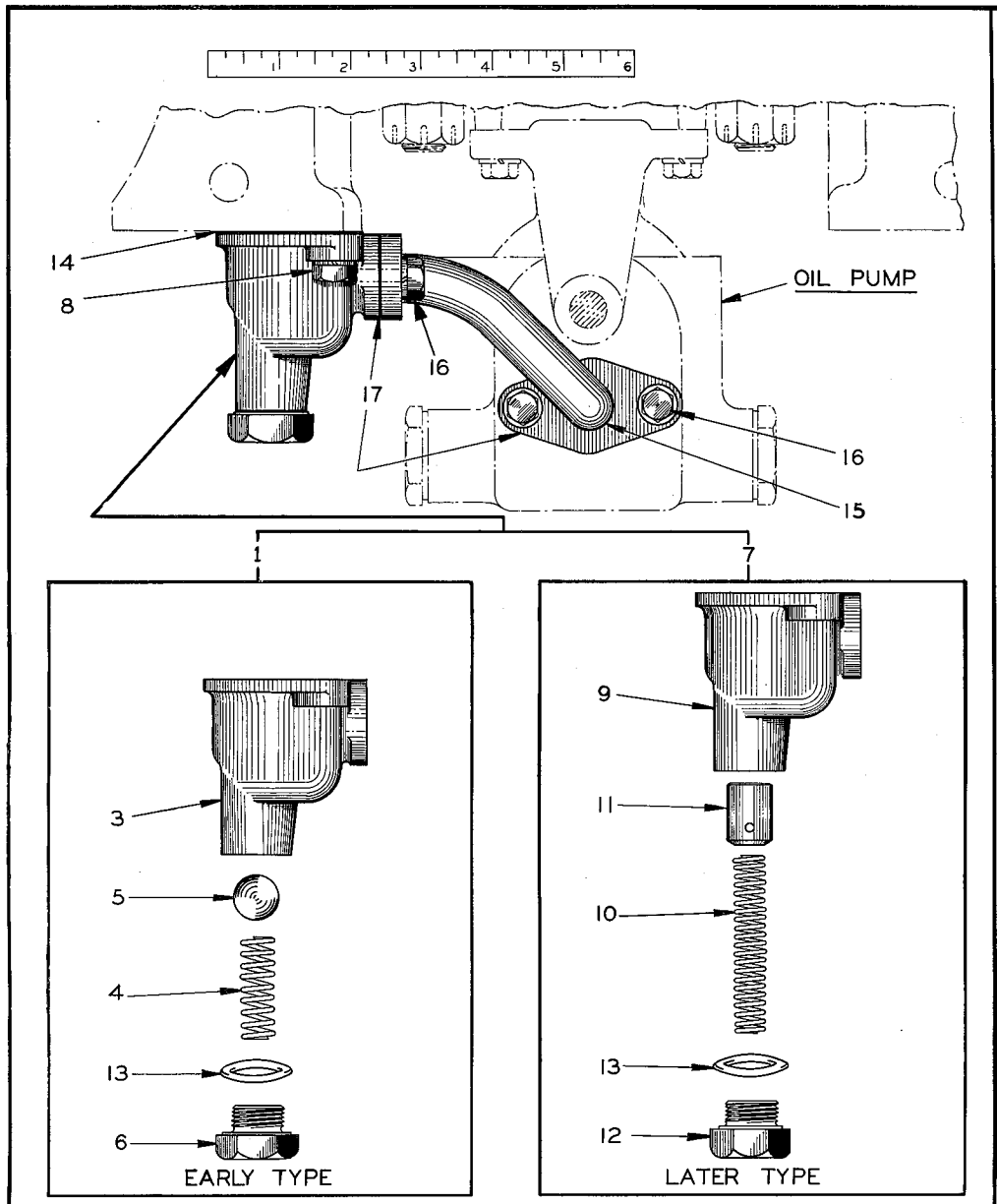

FIRST TYPE - USED WITH CHAIN-DRIVEN OIL PUMP

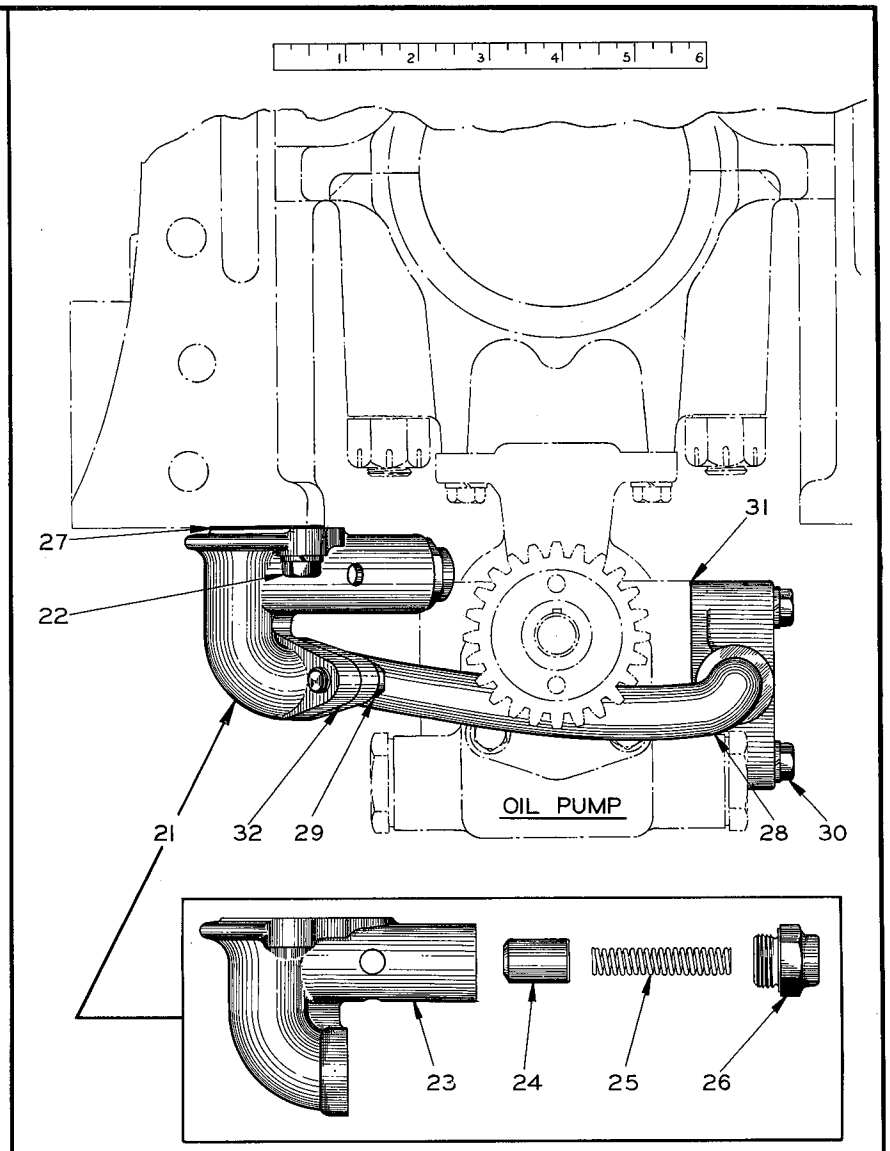

SECOND TYPE - USED WITH GEAR-DRIVEN OIL PUMP

PLATE 1360A-OIL PRESSURE REGULATORS

OIL PRESSURE REGULATOR
(See Plate 1360A)

FIRST TYPE - Used on Model AD3 Graders prior to serial #328

ITEM	PART NUMBER	QUANTITY AD3	QUANTITY AD4	DESCRIPTION	KIT NUMBER
				NOTE: Items 1 thru 6 were used on engines prior to #371-3864 only.	
1	------	1	-	VALVE ASSEMBLY, oil by-pass (Consists of items 3 thru 6, and 13)(Order VALVE ASSEMBLY 5158578)	
2	045295	1	-	CAPSCREW, 5/16"NC x 1"	
	051473	1	-	CAPSCREW, 5/16"NC x 1-3/4"	
	904205	2	-	LOCKWASHER, 5/16"	
3	------	1	-	BODY, oil by-pass valve (Not serviced. Order item 1)	
4	5151461	1	-	SPRING, oil by-pass valve	
5	905365	1	-	BALL, steel, 5/8" diameter	
6	5150032	1	-	PLUG, oil by-pass valve	
				NOTE: Items 7 thru 12 were used on engines after #371-3863 only.	
7	5158578	1	-	VALVE ASSEMBLY, oil by-pass (Consists of items 9 thru 13)	
8	045295	1	-	CAPSCREW, 5/16"NC x 1"	
	051473	1	-	CAPSCREW, 5/16"NC x 1-3/4"	
	904205	2	-	LOCKWASHER, 5/16"	
9	------	1	-	BODY, oil by-pass valve (Not serviced. Order item 7)	
10	5156815	1	-	SPRING, oil by-pass valve	
11	5157473	1	-	PLUNGER, oil by-pass valve	
12	5157587	1	-	PLUG, oil by-pass valve	
13	040942	1	-	GASKET, oil by-pass valve plug	058034
14	5154199	1	-	GASKET, oil by-pass valve	058034
15	5153972	1	-	PIPE, pump to by-pass valve	
16	045312	4	-	CAPSCREW, 5/16"NC x 3/4"	
	904205	4	-	LOCKWASHER, 5/16"	
17	5151370	2	-	GASKET, oil pipe	058034
				SECOND TYPE - Used on Model AD4 Graders, and Model AD3 Graders after serial #327	
21	5159384	1	1	REGULATOR ASSEMBLY, oil pressure (Consists of items 23 thru 26)	
22	045295	2	2	CAPSCREW, 5/16"NC x 1"	
	904205	2	2	LOCKWASHER, 5/16"	
23	------	1	1	BODY, oil pressure regulator (Not serviced. Order item 21)	
24	5156819	1	1	VALVE, oil pressure regulator	
25	5156815	1	1	SPRING, oil pressure regulator	
26	5156816	1	1	PLUG, oil pressure regulator	
27	5154199	1	1	GASKET, regulator to block	058034, 36 058037, 38
28	5159388	1	1	PIPE, pump to regulator	
29	045312	2	2	CAPSCREW, 5/16"NC x 3/4"	
	904205	2	2	LOCKWASHER, 5/16"	
30	051473	2	2	CAPSCREW, 5/16"NC x 1-3/4"	
	904205	2	2	LOCKWASHER, 5/16"	
31	5153313	1	1	GASKET, pipe to pump	058034, 36 058037, 38
32	5151370	1	1	GASKET, pipe to regulator	058034, 36 058037, 38

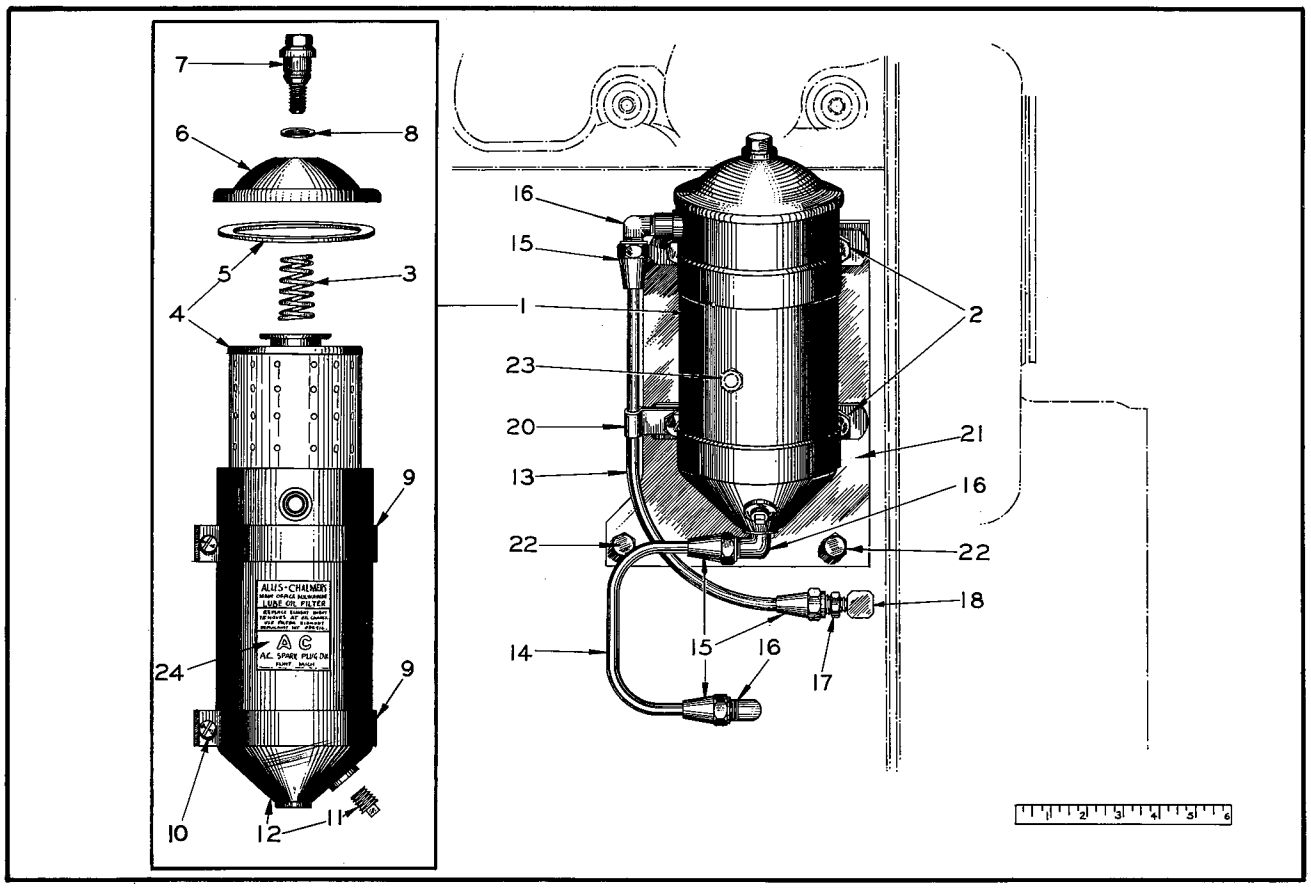

PLATE 1355C — OIL FILTER

OIL FILTER
(See Plate 1355C)

USAGE: All graders except those equipped with the special LUBERFINER OIL FILTER listed on page 43.

ITEM	PART NUMBER	QUANTITY AD3	QUANTITY AD4	DESCRIPTION	KIT NUMBER
1	040290	1	1	FILTER ASSEMBLY, oil (Consists of items 3 thru 12)	
2	910922	4	4	CAPSCREW, 3/8"NF x 3/4"	
	904206	4	4	LOCKWASHER, 3/8"	
3	040331	1	1	SPRING, element retaining	
4	034914	1	1	ELEMENT KIT (Includes item 5)	
5	040327	1	1	GASKET, cover	
6	040328	1	1	COVER, shell	
7	040788	1	1	SCREW, retaining	
8	040330	1	1	GASKET, retaining screw	
9	040805	2	2	BRACKET, mounting	
10	900872	2	2	BOLT, stove, 1/4"NC x 2-1/2" (Includes NUT)	
	904204	2	2	LOCKWASHER, 1/4"	
11	901652	1	1	PLUG, pipe, 1/4"NPT	
12	042426	1	1	SHELL ASSEMBLY (Includes item 11)	
13	051080	1	1	TUBE ASSEMBLY, oil inlet (16" long. Includes 2 NUTS 911208)	
14	051153	1	1	TUBE ASSEMBLY, oil outlet (12" long. Includes 2 NUTS 911208)	
15	911208	4	4	NUT, flared, long 3/8"	

(Continued)

OIL FILTER (Cont'd)

ITEM	PART NUMBER	QUANTITY AD3	QUANTITY AD4	DESCRIPTION	KIT NUMBER
16	910978	3	3	ELBOW, male, flared, 3/8" tube, 1/4"NPT	
17	912324	1	1	CONNECTOR, male, flared, 3/8" tube, 1/4"NPT (Graders #328 and up)	
18	910978	1	-	ELBOW, male, flared, 3/8" tube, 1/4"NPT (Graders prior to #328)	
	605793	1	1	ELBOW, oil inlet tube (90°, 1/4"NPT male and female, long type)(Used on graders #328 and up)	
	913922	1	1	FITTING, elbow adapter, 45°, 1/4"NPT (Not used on AD3 graders prior to #328 or after #493)	
20	041262	1	1	CLIP, oil inlet tube (single, closed type, 3/8" diam., 13/32" bolt hole)	
21	041242	1	1	BRACKET, mounting	
22	904706	2	2	CAPSCREW, 7/16"NC x 1-1/4"	
	904207	2	2	LOCKWASHER, 7/16"	
23	------	1	1	STUD, hand-hole cover (See CYLINDER BLOCK)	
	911041	1	1	NUT, 3/8"NF	
	904206	1	1	LOCKWASHER, 3/8"	
24	------	1	1	TRANSFER, instruction (See PAINTING AND MARKING)	

OIL FILLER
(See Plate 1754)

USAGE: Model AD4 Graders, and Model AD3 Graders after serial No. 327.

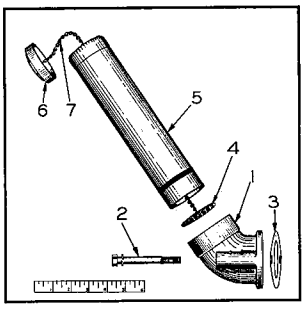

PLATE 1754

ITEM	PART NUMBER	QUANTITY AD3	QUANTITY AD4	DESCRIPTION	KIT NUMBER
1	5168175	1	1	ADAPTER, oil filling tube	
2	041915	2	2	CAPSCREW, 3/8"NC x 3-1/2"	
	904206	2	2	LOCKWASHER, 3/8"	
3	5168176	1	1	GASKET, oil filling tube adapter. . . .	058034, 37
4	5150147	1	1	STRAINER, oil filling tube	
5	5154542	1	1	TUBE, oil filling	
6	5156498	1	1	CAP, oil filling tube (Includes GASKET)	
7	5151374	1	1	CHAIN, oil filling tube cap	

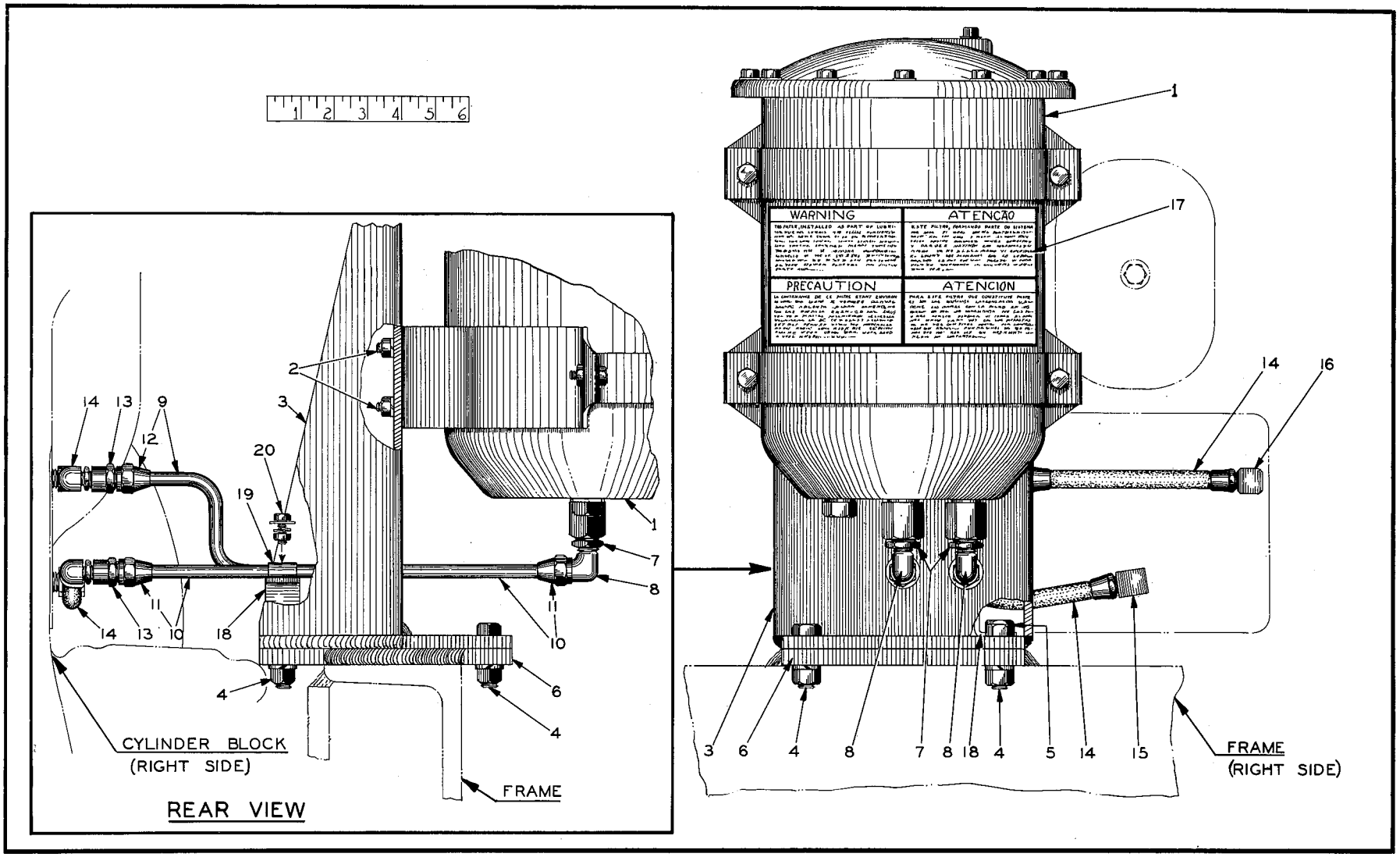

PLATE 1810A—LUBERFINER OIL FILTER

LUBERFINER OIL FILTER
(See Plate 1810A)

USAGE: Special Equipment. See page 40 for Standard Filter.

ITEM	PART NUMBER	QTY.	DESCRIPTION	KIT NUMBER
1	061817	1	FILTER ASSEMBLY, lubricating oil (See page 60 for repair parts)	
2	911168	8	CAPSCREW, 5/16"NF x 7/8"	
	913636	8	NUT, 5/16"NF	
	904205	8	LOCKWASHER, 5/16"	
3	062030	I	BRACKET, filter mounting	
4	035018	3	CAPSCREW, 1/2"NF x 1-1/2"	
	911043	3	NUT, 1/2"NF	
	904208	3	LOCKWASHER, 1/2"	
5	913607	1	CAPSCREW, 1/2"NF x 1-5/8" (Also attaches item 18)	
	911043	1	NUT, 1/2"NF	
	904208	1	LOCKWASHER, 1/2"	
6	------	1	PLATE, filter mounting bracket (welded to frame)	
7	901839	2	BUSHING, pipe reducing, 1/2"NPT to 1/4"NPT	
8	910978	2	ELBOW, flared, male, 3/8" tube, 1/4"NPT	
9	062121	1	TUBE ASSEMBLY, oil supply (15-1/4" long. Includes 2 NUTS 911198)	
10	062122	1	TUBE ASSEMBLY, oil return (12-1/2" long. Includes 2 NUTS 911208)	
11	911208	2	NUT, flared, long, 3/8" tube	
12	911198	2	NUT, flared, short, 3/8" tube	
13	914376	2	CONNECTOR, flared, female, 3/8" tube, 1/4"NPT	
14	605227	2	HOSE, filter (7" long)	
15	055244	1	ELBOW, oil return hoseline (90°, 1/4"NPT male and female)	
16	605793	1	ELBOW, oil supply hoseline (90°, 1/4"NPT male and female, long type)	
17	------	1	TRANSFER, warning (See PAINTING AND MARKING)	
18	062125	1	BRACKET, tube supporting	
19	062124	1	CLIP, attaching, filter tube (double open type, for two 3/8" tubes, 5/16" bolt hole)	
20	914330	1	CAPSCREW, 1/4"NF x 5/8"	
	911040	1	NUT, 1/4"NF	
	900816	1	WASHER, plain, U.S. Std., 1/4"	
	904204	1	LOCKWASHER, 1/4"	

MEMO

MANIFOLD, FUEL AND AIR SYSTEM

PAGE NUMBER

Air Box Drain 15

Air Cleaner 79, 81, 83

Air Cleaner Parts 84

Air Heater System 87, 89

Air Heater Parts 96

Air Heater Pump Parts 93

Air Pre-Cleaner Parts 85

Air Shut-off Control 217

Blower 77

Blower Drive 75

Engine Breathing Pipe 72

Exhaust Manifold 46, 47

Fuel Filters and Parts 54, 55, 56, 57, 59, 60

Fuel Manifolds 73

Fuel Pressure Gauge 219, 221

Fuel Pump 61

Fuel Tank and Lines 49, 51, 53

Governor 69

Injector 67

Injector Control 65

Muffler 46, 47

Primer 91

Throttle Control 217

Transfer (air cleaner) 142

Transfer (air heater operation) 142

Transfer (air pre-cleaner) 142

Transfer (fuel filter) 142

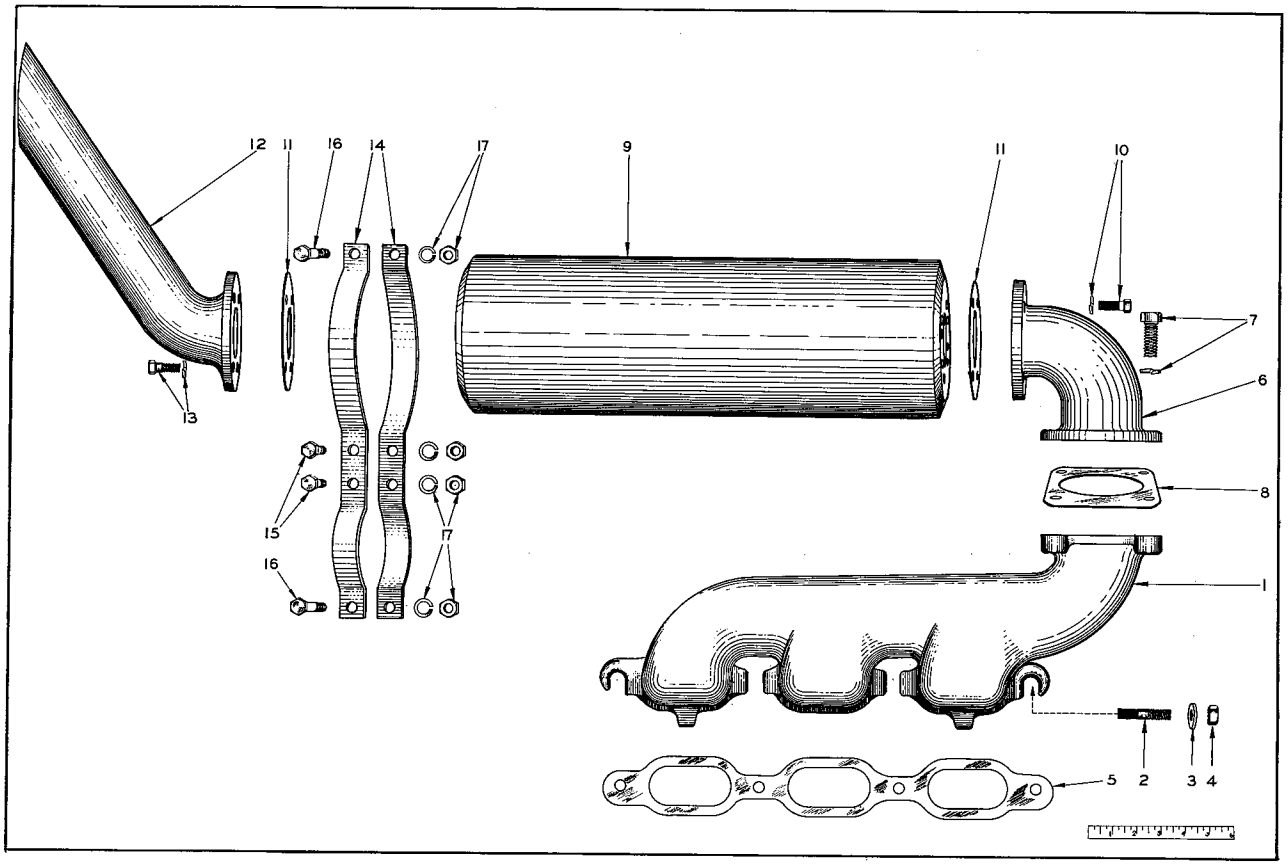

PLATE 1348A—EXHAUST MANIFOLD AND MUFFLER (AD3)

EXHAUST MANIFOLD AND MUFFLER
(See Plate 1348A)

USAGE: Model AD3 Graders only

ITEM	PART NUMBER	QTY.	DESCRIPTION	KIT NUMBER
1	5154077	1	MANIFOLD, exhaust	
2	5150197	4	STUD (7/16"NC x 7/16"NF x 2-1/8")	
3	5150198	4	WASHER, plain	
4	040383	4	NUT (hex, 7/16"NF)	
5	5150194	1	GASKET, exhaust manifold	058034, 35, 36
6	041614	1	ELBOW, manifold to muffler	
7	035733	4	CAPSCREW, 1/2"NC x 1-3/8"	
	904208	4	LOCKWASHER, 1/2"	
8	041234	1	GASKET, manifold to elbow	
9	041616	1	MUFFLER, exhaust	
10	035439	4	CAPSCREW, 3/8"NC x 1"	
	904206	4	LOCKWASHER, 3/8"	
11	041615	2	GASKET, exhaust muffler	
12	604271	1	ELBOW, exhaust	
13	035439	4	CAPSCREW, 3/8"NC x 1"	
	904206	4	LOCKWASHER, 3/8"	
14	041617	2	STRAP, muffler supporting	
15	012992	2	CAPSCREW, 3/8"NF x 1-1/4"	
16	035336	2	CAPSCREW, 3/8"NF x 1-3/4"	
17	911041	4	NUT, 3/8"NF	
	904206	4	LOCKWASHER, 3/8"	

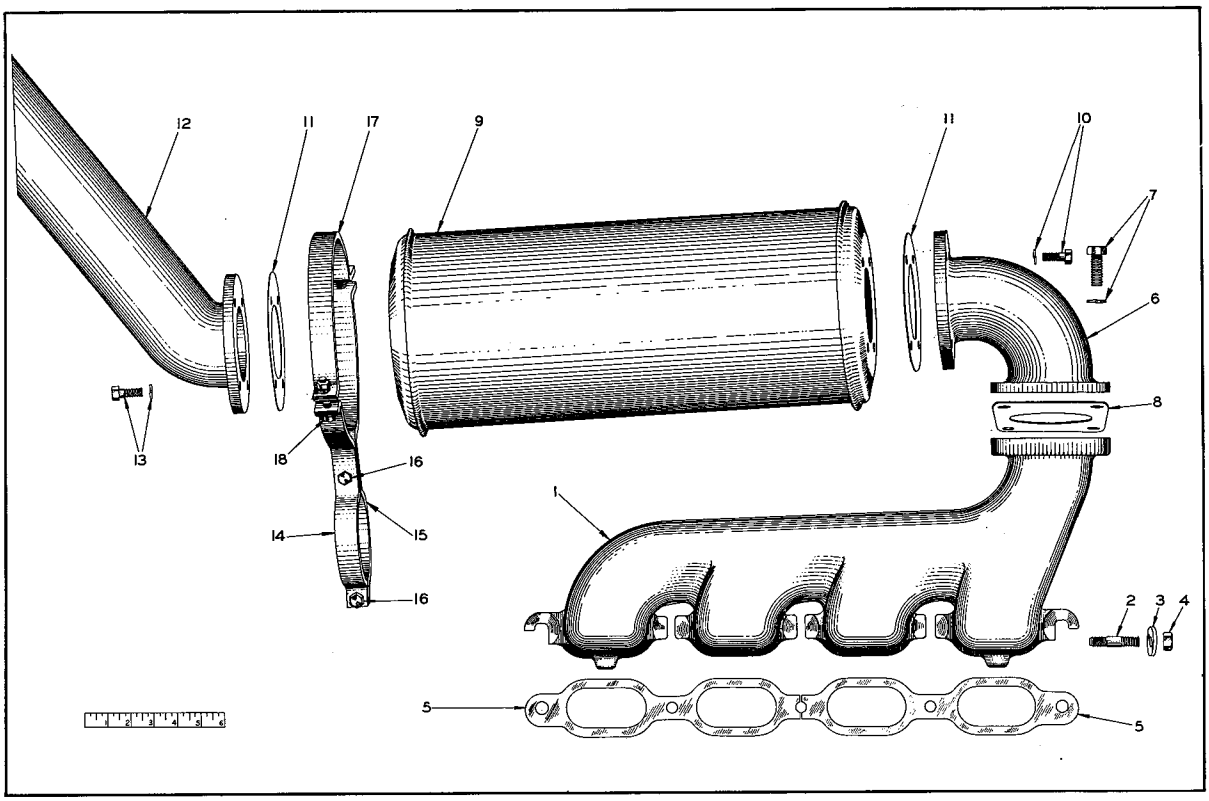

PLATE 1740—EXHAUST MANIFOLD AND MUFFLER (AD4)

EXHAUST MANIFOLD AND MUFFLER

USAGE: Model AD4 Graders only.

ITEM	PART NUMBER	QTY.	DESCRIPTION	KIT NUMBER
1	5154078	1	MANIFOLD, exhaust	
2	5150197	5	STUD (7/16"NC x 7/16"NF x 2-1/8")	
3	5150198	5	WASHER, plain	
4	040383	5	NUT (7/16"NF)	
5	5150195	2	GASKET, exhaust manifold	058037, 38, 39
6	605755	1	ELBOW, manifold to muffler	
7	035733	4	CAPSCREW, 1/2"NC x 1-3/8"	
	904208	4	LOCKWASHER, 1/2"	
8	041234	1	GASKET, manifold to elbow	
9	041236	1	MUFFLER, exhaust	
10	035439	4	CAPSCREW, 3/8"NC x 1"	
	904206	4	LOCKWASHER, 3/8"	
11	040798	2	GASKET, exhaust muffler	
12	605754	1	ELBOW, exhaust	
13	035439	4	CAPSCREW, 3/8"NC x 1"	
	904206	4	LOCKWASHER, 3/8"	
14	051505	1	STRAP, muffler supporting - outer	
15	051504	1	STRAP, muffler supporting - inner	
16	035336	2	CAPSCREW, 3/8"NF x 1-3/4"	
	911041	2	NUT, hex, 3/8"NF	
	904206	2	LOCKWASHER, 3/8"	
17	051506	1	STRAP, muffler supporting - upper	
18	035336	2	CAPSCREW, 3/8"NF x 1-3/4"	
	911041	2	NUT, hex, 3/8"NF	
	904206	2	LOCKWASHER, 3/8"	

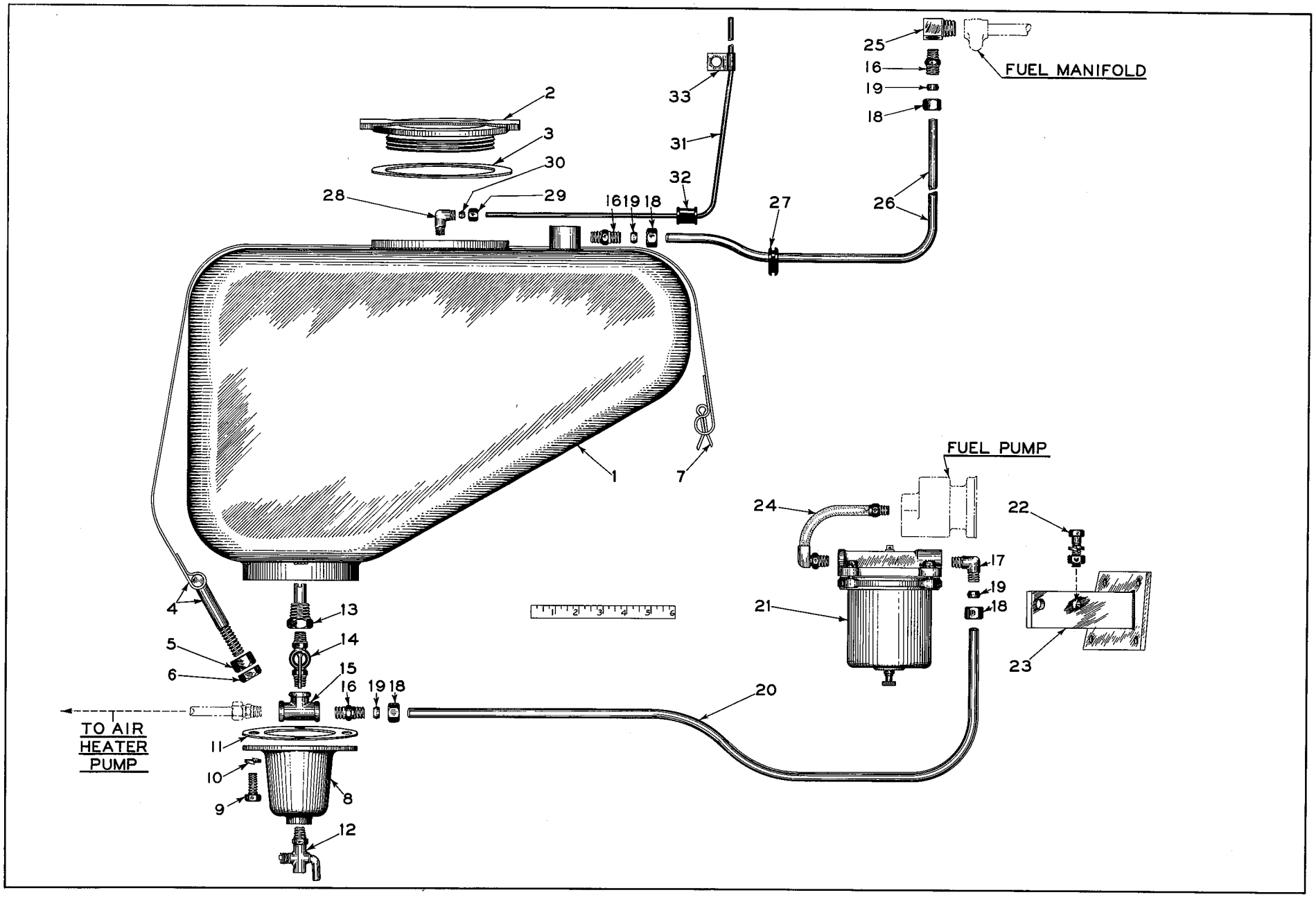

PLATE 1314A — FUEL TANK, FILTER AND LINES (EARLY AD3 GRADERS)

FUEL TANK AND LINES
(See Plate 1314A)

USAGE: Model AD3 Graders prior to serial #328

ITEM	PART NUMBER	QTY.	DESCRIPTION	KIT NUMBER
1	051025	1	TANK, fuel	
2	605054	1	CAP, fuel tank	
3	605055	1	GASKET, fuel tank cap (cork)	
4	604811	2	STRAP ASSEMBLY, fuel tank (1 STRAP, 1 T-BOLT)	
5	911028	2	NUT, 1/2"NC	
6	911035	2	NUT, jam, 1/2"NC	
7	900813	2	PIN, cotter, 3/16" x 2"	
8	042645	1	SUMP, fuel tank sediment	
9	903775	4	CAPSCREW, 3/8"NC x 7/8"	
10	904206	4	LOCKWASHER, 3/8"	
11	042641	1	GASKET, sediment sump	
12	911313	1	COCK, drain, 1/4"NPT	
13	042639	1	BUSHING, fuel tank outlet	
14	911195	1	COCK, shut-off, 1/4"NPT	
15	901703	1	TEE, pipe, 1/4"NPT	
16	910943	3	CONNECTOR, male, compression, 3/8" tube, 1/4"NPT (Includes NUT and SLEEVE)	
17	915279	1	ELBOW, male, compression, 3/8" tube, 1/4"NPT	
18	912065	4	NUT, compression fitting, 3/8" tube	
19	912588	4	SLEEVE, compression fitting, 3/8" tube	
20	604808	1	TUBE, tank to filter (copper, 3/8"O. D. x 33" long)	
21	042606	1	FILTER ASSEMBLY, first stage (See page 57 for repair parts)	
22	903631	2	CAPSCREW, 3/8"NC x 1-1/4"	
	911026	2	NUT, 3/8"NC	
	904206	2	LOCKWASHER, 3/8"	
23	------	1	BRACKET, fuel filter and odometer mounting (Order BRACKET 605777)	
24	605227	1	HOSE, filter to pump (7" long)	
25	040742	1	ELBOW, fuel manifold (90°, 1/4"NPT male and female, restricted)	
26	604810	1	TUBE, fuel manifold to tank (copper, 3/8"O. D. x 20" long)	
27	040842	1	GROMMET, fuel tube (rubber)	
28	910129	1	ELBOW, male, compression, 3/16" tube, 1/8"NPT (Includes NUT and SLEEVE)	
29	912064	1	NUT, compression fitting, 3/16" tube	
30	912367	1	SLEEVE, compression fitting, 3/16" tube	
31	605205	1	TUBE, vent, fuel tank (copper, 3/16"O. D. x 23" long)	
32	910868	1	GROMMET, fuel tank vent tube (rubber)	
33	U-479	1	CLIP, vent tube (single, closed type, 3/16" diam., 13/32" bolt hole)	

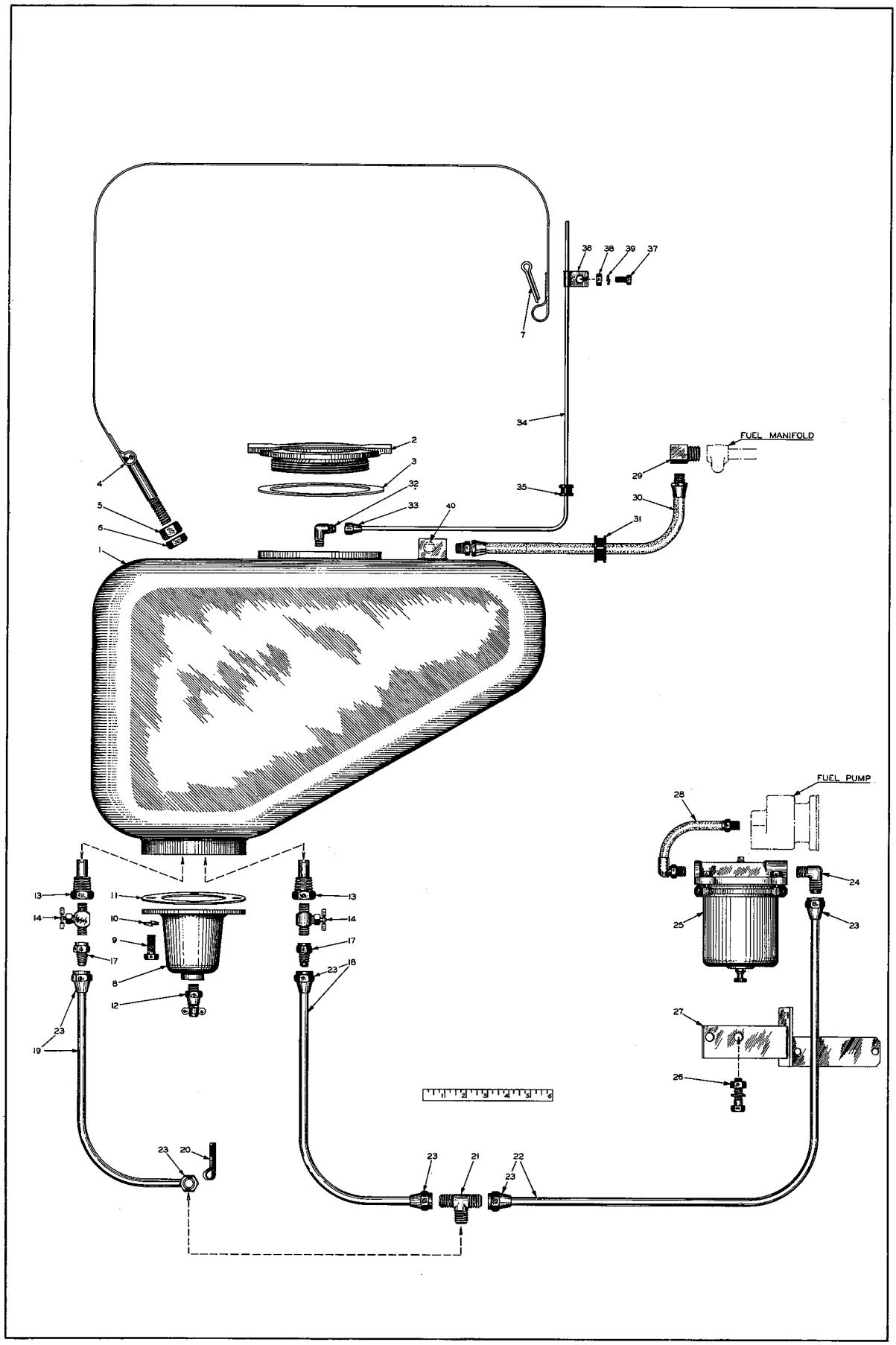

PLATE 1316B— FUEL TANK, FUEL FILTER AND LINES

FUEL TANK AND LINES

USAGE: Model AD3 Graders serial No. 328 thru 3313,and Model AD4 Graders prior to serial No. 3314.

ITEM	PART NUMBER	QUANTITY AD3	QUANTITY AD4	DESCRIPTION	KIT NUMBER
1	051025	1	1	TANK, fuel	
2	605054	1	1	CAP, fuel tank	
3	605055	1	1	GASKET, fuel tank cap (cork)	
4	604811	2	2	STRAP ASSEMBLY, fuel tank (1 STRAP, 1 T-BOLT)	
5	911028	2	2	NUT, 1/2"NC	
6	911035	2	2	NUT, jam, 1/2"NC	
7	900813	2	2	PIN, cotter, 3/16" x 2"	
8	042645	1	1	SUMP, fuel tank sediment	
9	903775	4	4	CAPSCREW, 3/8"NC x 7/8"	
10	904206	4	4	LOCKWASHER, 3/8"	
11	042641	1	1	GASKET, sediment sump	
12	912319	1	1	COCK, drain, 1/4"NPT	
13	042639	2	2	BUSHING, fuel tank outlet	
14	914378	2	2	COCK, shut-off, T-handle, 1/4"NPT	
17	914376	2	2	CONNECTOR, female, flared, 3/8" tube, 1/4"NPT (1 less used on graders equipped with Air Heater)	
18	050992	1	1	TUBE ASSEMBLY, tank left outlet (13-1/2" long. Includes 2 NUTS 911198)	
19	052390	1	1	TUBE ASSEMBLY, tank right outlet (34-1/4" long. Includes 2 NUTS 911198)	
20	043344	1	1	CLIP, right outlet tube (single, closed type, 3/8" diam., 9/16" bolt hole)	
21	914375	1	1	TEE, flared, 3/8" tube	
22	050993	1	-	TUBE ASSEMBLY, tank to filter - front section (28-3/4" long. Includes 2 NUTS 911198)(Used on graders prior to #3238)	
	065679	1	-	TUBE ASSEMBLY, tank to filter - front section (27-3/4" long. Includes 2 NUTS 911198)(Used on graders #3238 and up)	
	065681	-	1	TUBE ASSEMBLY, tank to filter - front section (29-3/4" long. Includes 2 NUTS 911198)	
23	911198	6	6	NUT, flared, short, 3/8" tube	
24	910978	1	1	ELBOW, male, flared, 3/8" tube, 1/4"NPT	
25	042606	1	1	FILTER ASSEMBLY, first stage (See page 57 for repair parts)(Used on graders prior to #3238. Order FILTER ASSEMBLY 065596)	
	065596	1	1	FILTER ASSEMBLY, first stage (See page 57 for repair parts)(Used on graders #3238 and up)	
26	903631	2	2	CAPSCREW, 3/8"NC x 1-1/4"	
	904206	2	2	LOCKWASHER, 3/8"	
	911026	2	2	NUT, 3/8"NC	
27	605777	1	1	BRACKET, mounting, fuel filter and odometer (Graders prior to #3238)	
	065665	1	1	BRACKET, mounting, fuel filter and odometer (Graders #3238 and up)	
28	605227	1	1	HOSE, fuel filter to pump (7" long)	
29	040742	1	1	ELBOW, fuel manifold (90°, 1/4"NPT male and female, restricted)	
30	605228	1	-	HOSE, fuel manifold to tank (18 long)(Used on graders prior to serial #623)	
	060677	1	1	HOSE, fuel manifold to tank (14-1/2" long)(Used on graders #623 and up)	
31	605164	1	1	GROMMET, fuel hose (rubber)	
32	910268	1	1	ELBOW, male, flared, 3/16" tube, 1/8"NPT	

(Continued)

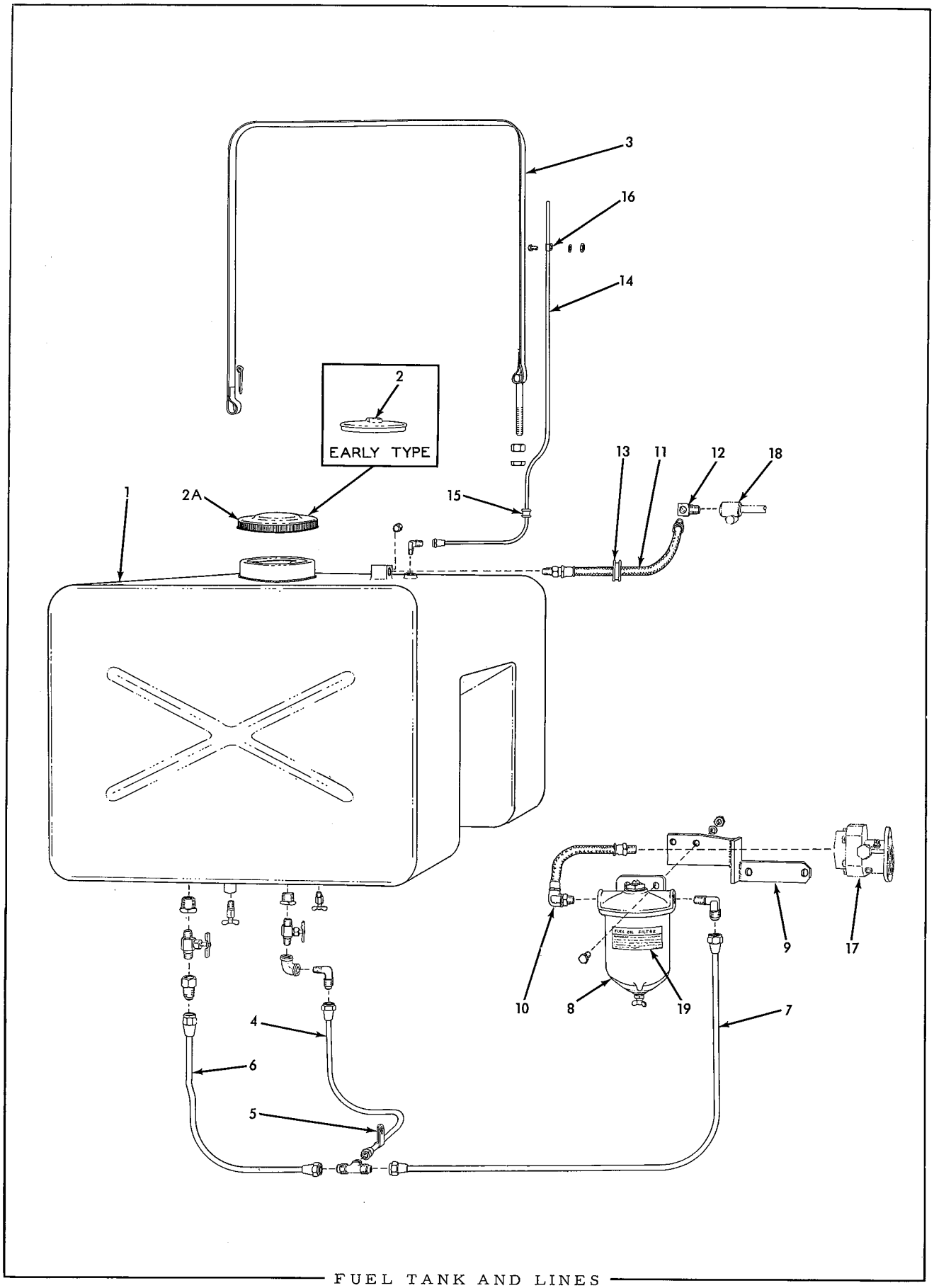

FUEL TANK AND LINES

FUEL TANK AND LINES (Cont'd)
(See Plate 1316B)

ITEM	PART NUMBER	QUANTITY AD3	QUANTITY AD4	DESCRIPTION	KIT NUMBER
33	910906	1	1	NUT, flared, short, 3/16" tube	
34	605205	1	1	TUBE, vent, fuel tank (copper, 3/16"O. D. x 23")	
35	023176	1	1	GROMMET, fuel tank vent tube (rubber)	
36	AM-8763	1	1	CLIP, vent tube (single, closed type, 3/16" diam., 9/32" bolt hole)	
37	905655	1	1	CAPSCREW, 1/4"NC x 1/2"	
38	911024	1	1	NUT, 1/4"NC	
39	904204	1	1	LOCKWASHER, 1/4"	
40	901652	1	1	PLUG, pipe, 1/4"NPT	

NOTE: Items 13 thru 28 are not used on graders equipped with LUBERFINER fuel filter. See page 59.

FUEL TANK AND LINES

USAGE: Graders serial No. 3314 and up.

ITEM	PART NUMBER	QUANTITY AD3	QUANTITY AD4	DESCRIPTION	KIT NUMBER
1	073754	1	1	TANK.ASSEMBLY, fuel (Includes item 24)	
	901839	2	2	BUSHING, pipe reducing, 1/2"-14NPT to 1/4"NPT	
	914378	2	2	VALVE, shut-off, T-handle, 1/4"NPT	
	914376	1	1	CONNECTOR, female, flared, 3/8" tube, 1/4"NPT (fuel line)	
	901677	1	1	ELBOW, pipe, 90°, 1/4"NPT (fuel line)	
	910978	1	1	ELBOW, male, flared, 3/8" tube, 1/4"NPT (fuel line)	
	914453	2	2	COCK, drain, T-handle, 1/8"NPT (sediment)	
	901652	3	3	PLUG, pipe, 1/4"NPT	
	910268	1	1	ELBOW, male, flared, 3/16" tube, 1/8"NPT (vent line)	
2	068625	1	1	CAP, fuel tank (screw type)(Used on graders prior to #3805)	
2A	073753	1	1	CAP ASSEMBLY, fuel tank (Bayonet type. Includes GASKET. Used on graders #3805 and up)	
3	068191	2	2	STRAP ASSEMBLY, fuel tank (Includes T-BOLT)	
	911028	2	2	NUT, 1/2"NC	
	911035	2	2	NUT, jam, 1/2"NC	
	900813	2	2	PIN, cotter, 3/16" x 2"	
4	068729	1	1	TUBE ASSEMBLY, tank right outlet (Includes 2 NUTS 911198)	
	911198	2	2	NUT, flared, short, 3/8" tube	
5	043344	1	1	CLIP, right outlet tube (single, closed type, 3/8" diam., 9/16" bolt hole)	
6	068727	1	1	TUBE ASSEMBLY, tank left outlet (Includes 2 NUTS 911198)	
	911198	2	2	NUT, flared, short, 3/8" tube	
	914375	1	1	TEE, flared, 3/8" tube	
7	065681	1	1	TUBE ASSEMBLY, tank to filter - front section (Includes 2 NUTS 911198)	
	911198	2	2	NUT, flared, short, 3/8" tube	
	910978	1	1	ELBOW, male, flared, 3/8" tube, 1/4"NPT	
8	065596	1	1	FILTER ASSEMBLY, first stage (See page 57 for repair parts)	
	903631	2	2	CAPSCREW, 3/8"NC x 1-1/4"	
	911026	2	2	NUT, 3/8"NC	
	904206	2	2	LOCKWASHER, 3/8"	
9	065665	1	1	BRACKET, fuel filter and odometer mounting	
10	605227	1	1	HOSE, fuel filter to pump (7" long)	
11	060677	1	1	HOSE, fuel manifold to tank (14-1/2" long)	
12	040742	1	1	ELBOW, fuel manifold (90°, 1/4"NPT male and female, restricted)	
13	605164	1	1	GROMMET, fuel hose (rubber)	
14	605205	1	1	TUBE, vent, fuel tank (copper, 3/16"O. D. x 26")	
	910906	1	1	NUT, flared, short, 3/16" tube	
15	023176	1	1	GROMMET, fuel tank vent tube (rubber)	
16	AM-8763	1	1	CLIP, vent tube (single, closed type, 3/16" diam., 9/32" bolt hole)	
	905655	1	1	CAPSCREW, 1/4"NC x 1/2"	
	911024	1	1	NUT, 1/4"NC	
	904204	1	1	LOCKWASHER, 1/4"	
17	------	1	1	PUMP ASSEMBLY, fuel (See page 61)	
18	------	1	1	MANIFOLD, fuel - upper (See page 73)	
19	------	1	1	TRANSFER, fuel filter instruction (See page 142)	

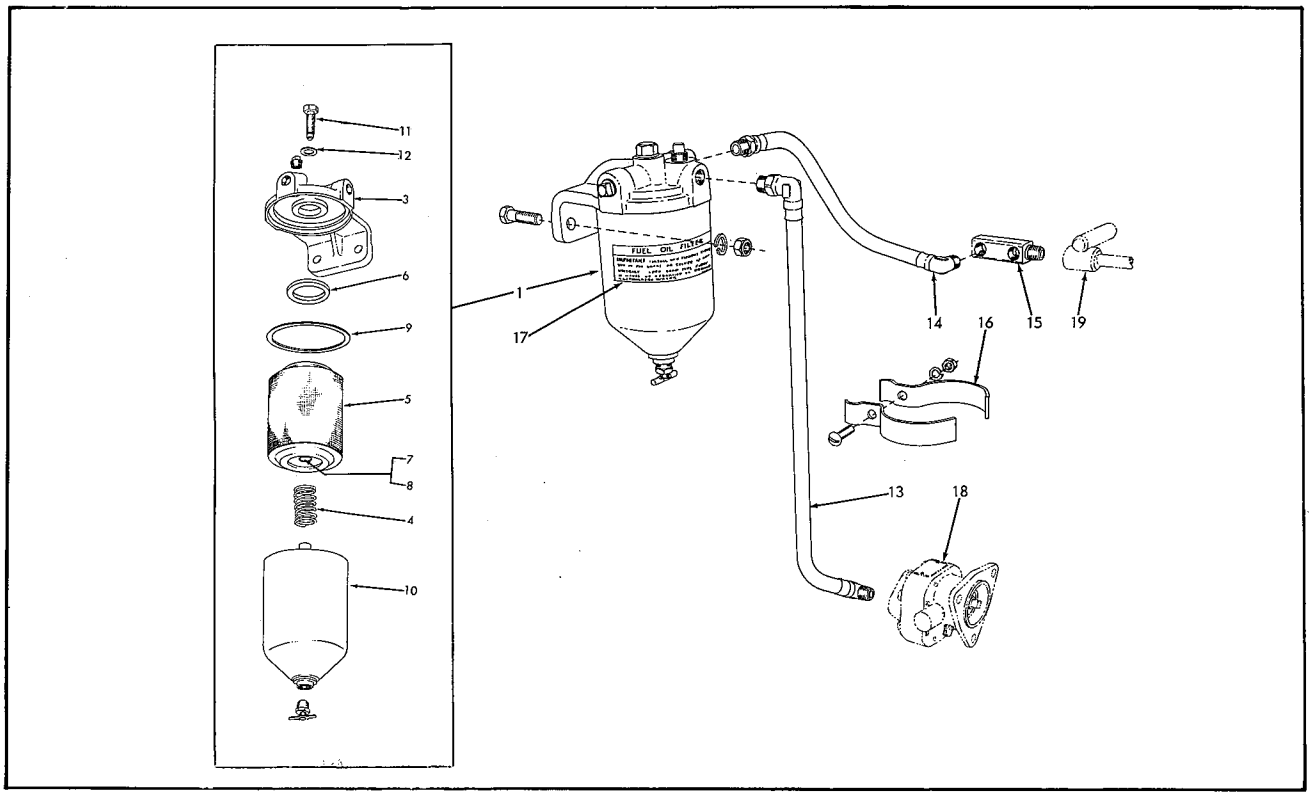

SECOND STAGE FUEL FILTER

USAGE: Graders prior to serial No. 3238.

ITEM	PART NUMBER	QUANTITY AD3	QUANTITY AD4	DESCRIPTION	KIT NUMBER
1	------	1	1	FILTER ASSEMBLY, fuel (Consists of items 3 thru 12)(Not available. Order FILTER ASSEMBLY 065590)	
	903631	2	2	CAPSCREW, 3/8"NC x 1-1/4"	
	904206	2	2	LOCKWASHER, 3/8"	
	911026	2	2	NUT, 3/8"NC	
3	040932	1	1	HEAD, fuel filter	
	901652	1	1	PLUG, pipe, 1/4"NPT	
4	040891	1	1	SPRING, element retaining	
5	040930	1	1	ELEMENT KIT (Includes items 6 thru 9)	
6	------	1	1	GASKET, filter element - upper (Not serviced. Order item 4)	
7	------	1	1	GASKET, filter element - lower (Not serviced. Order item 4)	
8	------	1	1	WASHER, filter element (Not serviced. Order item 4)	
9	040931	1	1	GASKET, filter case	
10	040929	1	1	CASE, filter	
	915433	1	1	COCK, drain, T-handle, 1/4"NPT	
11	040897	1	1	SCREW, retaining	
12	040896	1	1	GASKET, retaining screw	
13	605228	1	1	HOSE, fuel pump to filter (18" long)	
14	605229	1	1	HOSE, filter to fuel manifold (12" long)	
15	605793	1	1	ELBOW, fuel manifold	
16	605270	2	-	CLAMP, fuel hose supporting (Graders prior to #328 only.)	
	900577	1	-	SCREW, machine, 1/4"NC x 1"	
	904204	1	-	LOCKWASHER, 1/4"	
	911024	1	-	NUT, 1/4"NC	
17	------	1	1	TRANSFER, instruction (See PAINTING AND MARKING)	
18	------	1	1	PUMP, fuel (See FUEL PUMP AND DRIVE)	
19	------	1	1	MANIFOLD, fuel (See FUEL MANIFOLDS)	

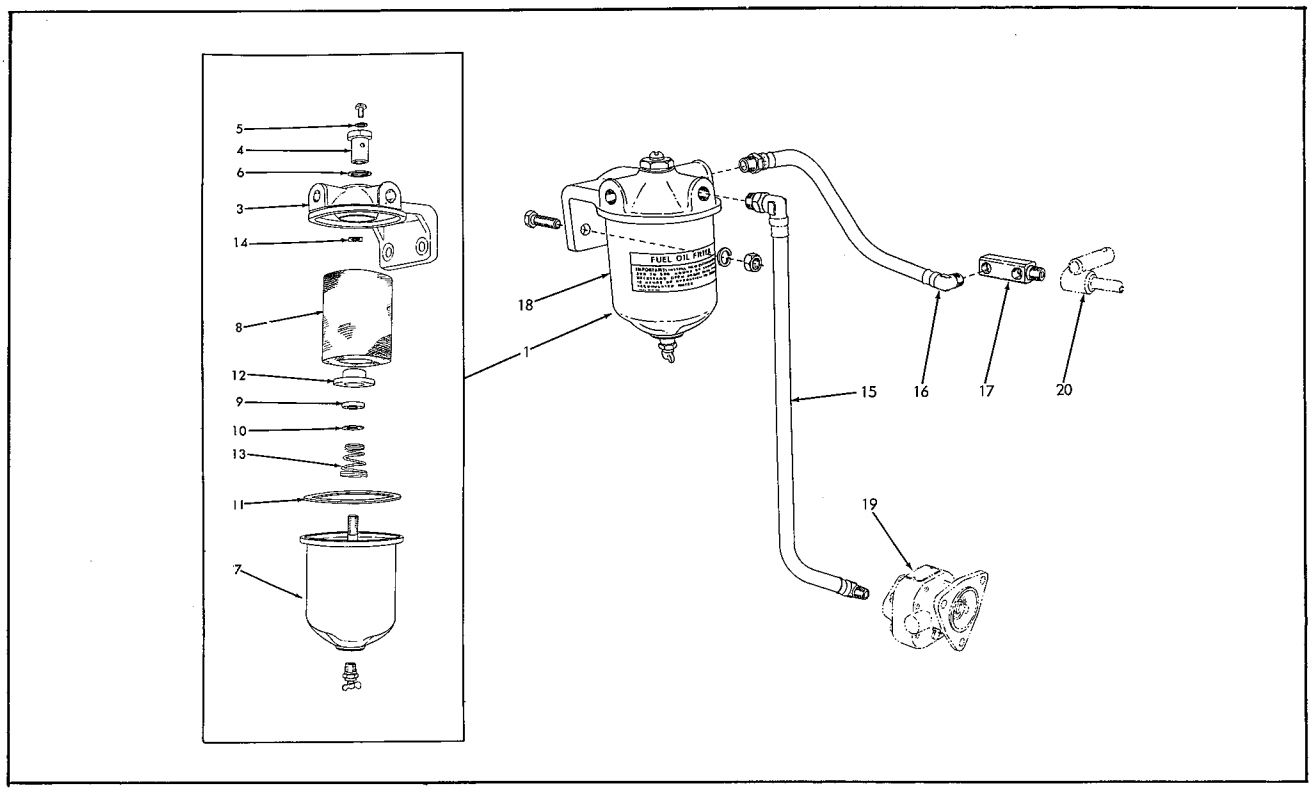

SECOND STAGE FUEL FILTER

USAGE: Graders serial No. 3238 and up.

ITEM	PART NUMBER	QUANTITY AD3	QUANTITY AD4	DESCRIPTION	KIT NUMBER
1	065590	1	1	FILTER ASSEMBLY, fuel (Consists of items 3 thru 14)	
	903631	2	2	CAPSCREW, 3/8"NC x 1-1/4"	
	904206	2	2	LOCKWASHER, 3/8"	
	911026	2	2	NUT, 3/8"NC	
3	065586	1	1	HEAD, filter	
	907859	1	1	PLUG, pipe, hex-socket-hd., 1/4"NPT	
4	065578	1	1	NUT, shell retaining	
	915432	1	1	SCREW, machine, 1/4"NC x 5/16"	
5	065577	1	1	GASKET, bleeding screw	
6	065579	1	1	GASKET, shell retaining nut	
7	065582	1	1	SHELL, filter	
	915433	1	1	COCK, drain, T-handle, 1/4"NPT	
8	065583	1	1	ELEMENT KIT (Includes items 9 thru 11)	
9	------	1	1	GASKET, element seating plate (Not serviced. Order item 8)	
10	------	1	1	WASHER, seating plate gasket (Not serviced. Order item 8)	
11	043130	1	1	GASKET, shell	
12	065584	1	1	PLATE, element seating	
13	065585	1	1	SPRING, element	
14	067481	1	1	GUIDE, element centering	
15	605228	1	1	HOSE, fuel pump to filter (18" long)	
16	605229	1	1	HOSE, filter to fuel manifold (12" long)	
17	605793	1	1	ELBOW, fuel manifold	
18	------	1	1	TRANSFER, instruction (See PAINTING AND MARKING)	
19	------	1	1	PUMP, fuel (See FUEL PUMP AND DRIVE)	
20	------	1	1	MANIFOLD, fuel (See FUEL MANIFOLDS)	

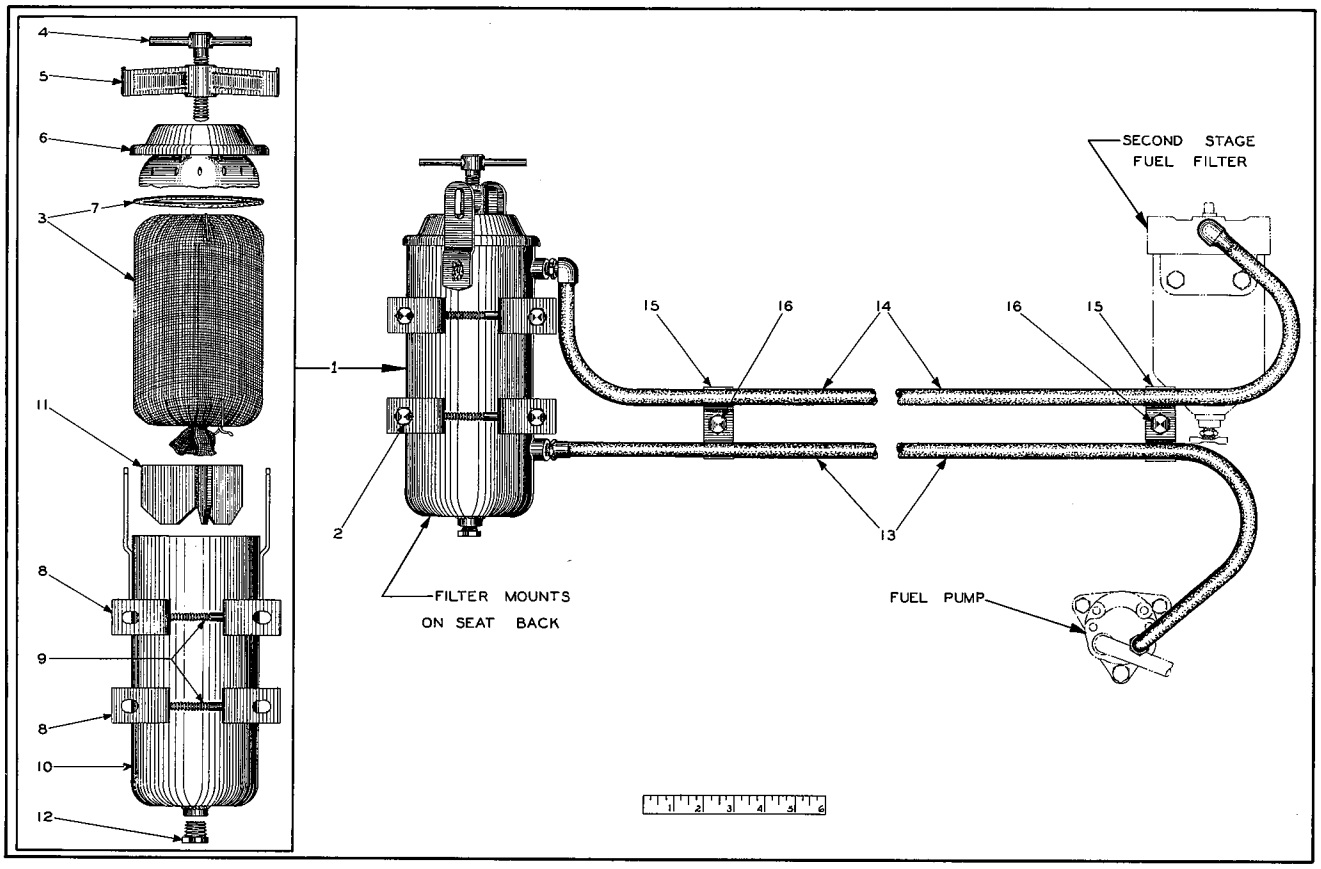

PLATE 1758——INTERMEDIATE STAGE FUEL FILTER

INTERMEDIATE STAGE FUEL FILTER
(See Plate 1758)

USAGE: Special Equipment. Used on early Model AD3 Graders only.

ITEM	PART NUMBER	QTY.	DESCRIPTION	KIT NUMBER
1	041945	1	FILTER ASSEMBLY, intermediate stage (Consists of items 3 thru 12)	
2	903775	4	CAPSCREW, 3/8"NC x 7/8"	
	911026	4	NUT, 3/8"NC	
	904206	4	LOCKWASHER, 3/8"	
3	208540	1	ELEMENT KIT, fuel filter (Includes item 7)	
4	041965	1	SCREW, filter cover hold-down	
5	041966	1	CLAMP, filter cover hold-down	
6	041972	1	COVER, fuel filter	
7	------	1	GASKET, fuel filter cover (Serviced only as part of item 3)	
8	------	2	BAND, filter mounting (Not available)	
9	900886	2	BOLT, stove, 5/16"NC x 2-1/2" (Includes square NUT)	
	904205	2	LOCKWASHER, 5/16"	
10	------	1	SHELL, fuel filter (Not serviced. Order item 1)	
11	041975	1	SUPPORT, filter element	
12	049666	1	PLUG, filter drain (3/8"NPT)	
13	058429	1	HOSE, fuel pump to intermediate stage filter (48" long)	
14	058430	1	HOSE, intermediate stage filter to second stage filter (48" long)	
15	058428	2	CLIP, fuel filter hose (double, open type, for two 1/2" diam. lines, 7/16" bolt hole)	
16	903775	2	CAPSCREW, 3/8"NC x 7/8"	
	911026	2	NUT, 3/8"NC	
	904206	2	LOCKWASHER, 3/8"	

FUEL FILTER 042606
(See Plate 1335B)

USAGE: Graders prior to serial No. 3238.
See pages 49 and 51

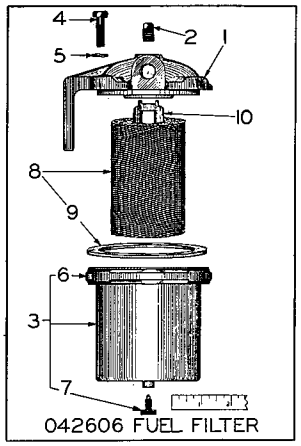

PLATE 1335B

ITEM	PART NUMBER	QTY.	DESCRIPTION	KIT NUMBER
1	065472	1	HEAD (also order item 10 to assure fit on early units)	
2	901652	1	PLUG, pipe, 1/4"NPT	
3	043128	1	SHELL ASSEMBLY (Includes items 6 and 7)	
4	905657	4	CAPSCREW, 1/4"NC x 1"	
5	904204	4	LOCKWASHER, 1/4"	
6	------	1	RING, clamp (Order item 3)	
7	043132	1	SCREW, drain	
8	048068	1	ELEMENT KIT (Includes item 9)	
9	043130	1	GASKET, shell	
10	065473	1	GUIDE, element (2 pcs.)(Late units only)	

FUEL FILTER 065596

USAGE: Graders serial No. 3238 and up.
See page 51 and 53 for listing of complete Filter Assembly.

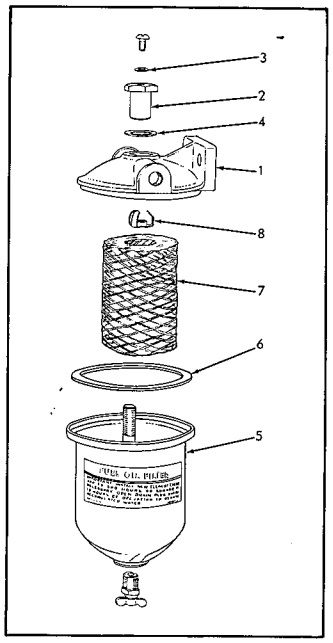

1	065593	1	HEAD
2	065578	1	NUT, shell retaining
	915432	1	SCREW, machine, 1/4"NC x 5/16"
3	065577	1	GASKET, bleeding screw
4	065579	1	GASKET, shell retaining nut
5	065621	1	SHELL, filter
	915433	1	COCK, drain
6	043130	1	GASKET, shell
7	048068	1	ELEMENT KIT (Includes item 6)
8	065581	1	GUIDE, element centering

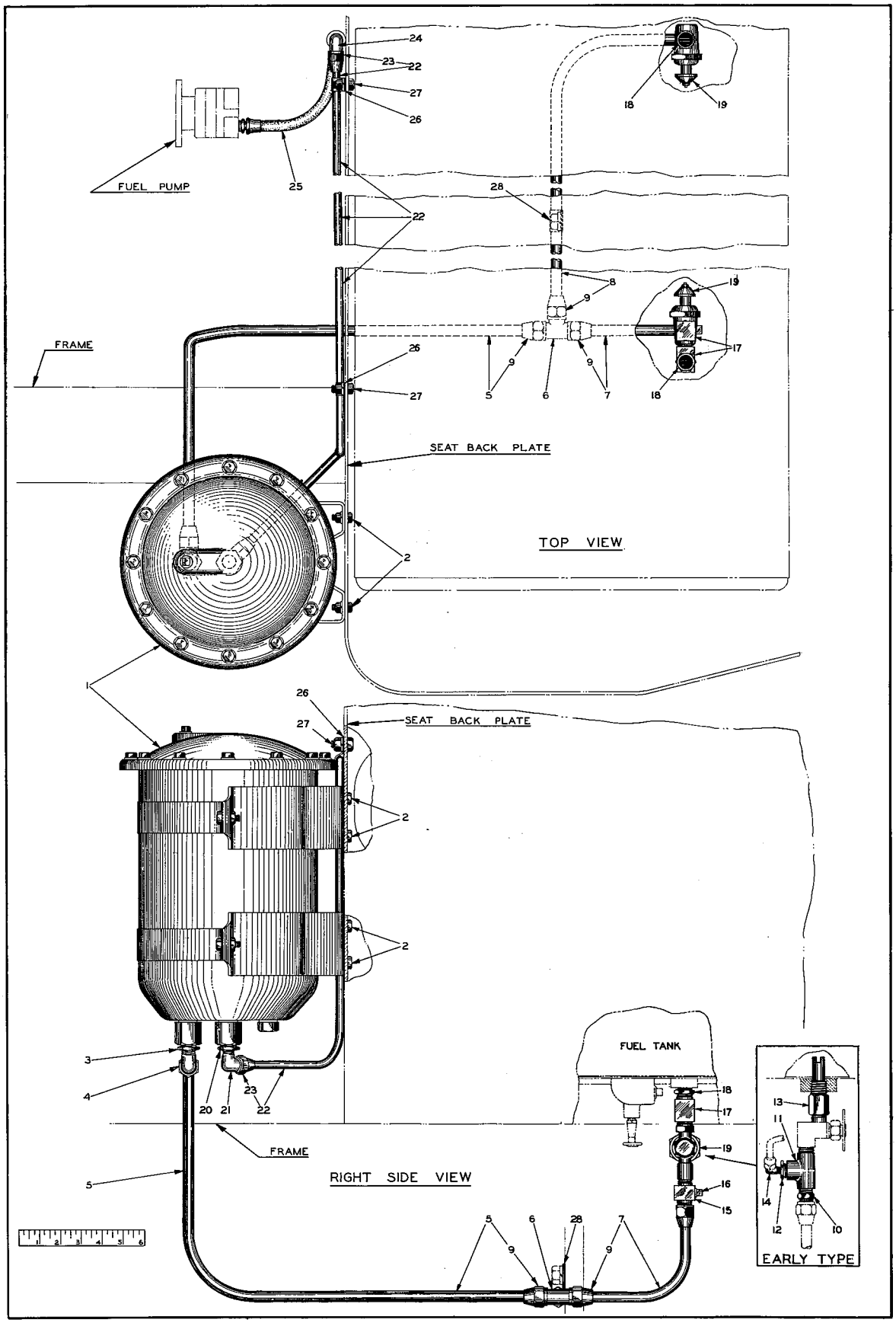

PLATE 1811A— LUBERFINER FUEL FILTER

LUBERFINER FUEL FILTER
(See Plate 1811A)

USAGE: Special Equipment. Applicable to Models AD3 and AD4. Replaces standard first stage fuel filter.

ITEM	PART NUMBER	QTY.	DESCRIPTION	KIT NUMBER
1	061814	1	FILTER ASSEMBLY, fuel (See page 60 for repair parts)	
2	910167	8	CAPSCREW, 5/16"NF x 3/4"	
	913636	8	NUT, 5/16"NF	
	904205	8	LOCKWASHER, 5/16"	
3	904271	1	BUSHING, pipe reducing, 1/2"NPT to 3/8"NPT	
4	911309	1	ELBOW, flared, male, 1/2" tube, 3/8"NPT	
5	062044	1	TUBE ASSEMBLY, filter to tee(32" long. Includes 2 NUTS 913243)	
6	915292	1	TEE, union, flared, 1/2" tube	
7	064879	1	TUBE ASSEMBLY, tee to right tank outlet (10" long. Includes 2 NUTS 913243)(Used on graders prior to #3314)	
	068825	1	TUBE ASSEMBLY, tee to right tank outlet (8" long. Includes 2 NUTS 913243)(Used on graders #3314 and up)	
8	064877	1	TUBE ASSEMBLY, tee to left tank outlet (35-1/2" long. Includes 2 NUTS 913243)(Used on graders prior to #3314)	
	068822	1	TUBE ASSEMBLY, tee to left tank outlet (31-1/2" long. Includes 2 NUTS 913243)(Used on graders #3314 and up)	
	910947	1	CONNECTOR, flared, male, 1/2" tube, 3/8"NPT	
9	913243	6	NUT, flared, short, 1/2" tube	
			Items 10 thru 13 comprise the EARLY TYPE TANK CONNECTION as used on graders prior to serial No. 3314.	
10	910947	1	CONNECTOR, flared, male, 1/2" tube, 3/8"NPT	
11	913257	1	TEE, pipe, 3/8"NPT	
12	901838	1	BUSHING, pipe reducing, 3/8"NPT to 1/8"NPT	
13	061812	2	BUSHING, fuel tank	
14	910161	1	ELBOW, flared, male, 1/4" tube, 1/8"NPT (Used on tractors equipped with AIR HEATER)	
	901651	1	PLUG, pipe, 1/8"NPT (Used on tractors equipped with PRIMER SYSTEM)	
			Items 15 thru 18 comprise the LATE TYPE TANK CONNECTION as used on graders serial No. 3314 and up.	
15	068823	1	CONNECTOR, right tank outlet tube (flared, male, 1/2" tube, 3/8"NPT, has 1/8"NPT female side outlet for Air Heater connection)	
16	901651	1	PLUG, pipe, 1/8"NPT	
17	055245	2	ELBOW, right fuel shut-off cock (90°, 3/8"NPT male and female)	
18	904271	2	BUSHING, pipe reducing, 1/2"NPT to 3/8"NPT	
19	064322	2	COCK, fuel shut-off (3/8"NPT male and female ends)	
20	901839	1	BUSHING, pipe reducing, 1/2"NPT to 1/4"NPT	
21	910978	1	ELBOW, flared, male, 3/8" tube, 1/4"NPT	
22	062108	1	TUBE ASSEMBLY, filter to pump (48-3/8" long. Includes 2 NUTS 911208)	
23	911208	2	NUT, flared, long, 3/8" tube	
24	915291	1	ELBOW, flared, female, 3/8" tube, 1/4"NPT	
25	060677	1	HOSE, filter to pump (14-1/2" long)	
26	040796	2	CLIP, tube supporting (single, closed type, 3/8" diam., 13/32" bolt-hole)(3 used on graders prior to #3314)	
27	036032	2	CAPSCREW, 3/8"NF x 3/4"	
	911041	2	NUT, 3/8"NF	
	904206	2	LOCKWASHER, 3/8"	
28	048145	1	CLIP, tube supporting (single, closed type, 1/2" diam., 17/32" bolt-hole)	

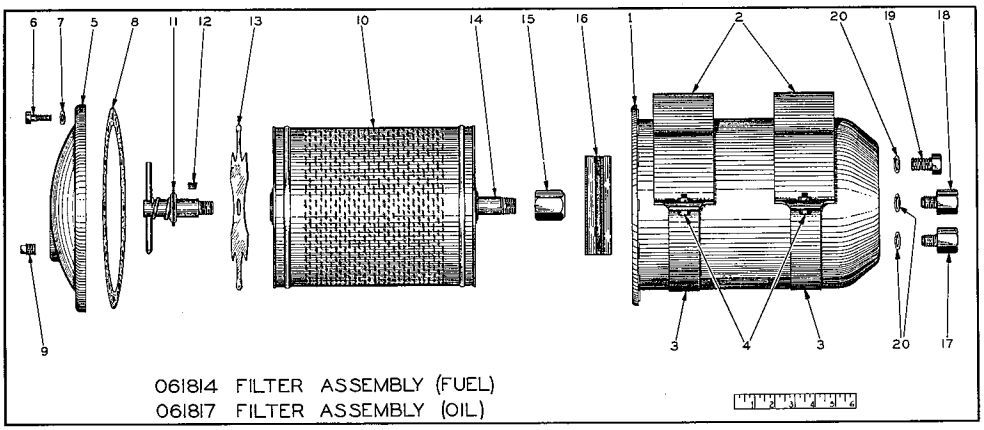

PLATE 1809A——FILTER PARTS

LUBERFINER FILTER PARTS
(See Plate 1809A)

061814 FILTER ASSEMBLY, fuel (See page 59)
061817 FILTER ASSEMBLY, oil (See page 43)

ITEM	PART NUMBER	QUANTITY 061814	QUANTITY 061817	DESCRIPTION	KIT NUMBER
1	------	1	1	HOUSING ASSEMBLY (Includes bolt RING)(Not serviced)	
2	063898	2	2	BRACKET, mounting	
3	063899	2	2	BAND, mounting bracket	
4	903771	4	4	CAPSCREW, 5/16"NC x 7/8"	
	906652	4	4	NUT, jam, 5/16"NC	
5	------	1	1	COVER, housing (Not serviced)	
6	045295	12	12	CAPSCREW, 5/16"NC x 1"	
7	910335	12	12	WASHER, plain, SAE std., 5/16"	
8	063896	1	1	GASKET, housing cover	
9	901652	1	1	PLUG, pipe, 1/4"NPT	
10	062101	1	1	ELEMENT KIT, filtering (Includes item 8)	
11	063892	1	1	TAKE-UP ASSEMBLY, element (Serviced only as a unit)	
12	063893	-	1	PLUG, orifice	
13	063897	1	1	PLATE, element centering	
14	063886	1	1	TUBE, outlet	
15	063887	1	1	NUT, outlet tube	
16	063888	1	1	PLATE, reinforcing, housing bottom	
17	063890	-	1	VALVE ASSEMBLY, inlet check (Includes 1 SPRING, 1 RING 1 CUP. Serviced only as a unit)	
	063889	1	-	BOLT, hollow	
18	063889	1	1	BOLT, hollow	
19	035159	1	1	CAPSCREW, 5/8"NC x 1" (drain plug)	
20	063891	3	3	GASKET	

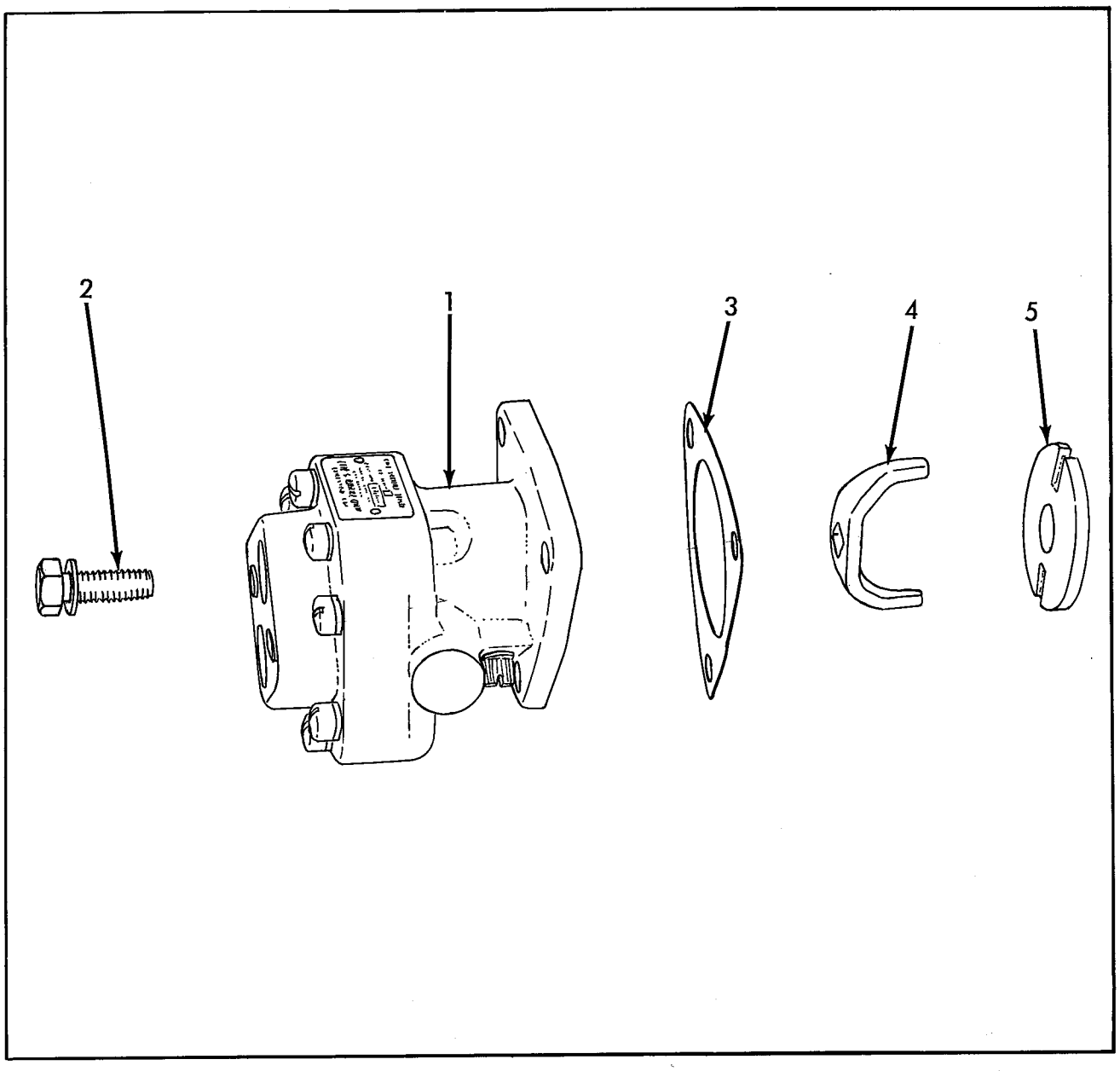

FUEL PUMP AND DRIVE

ITEM	PART NUMBER	QUANTITY AD3	QUANTITY AD4	DESCRIPTION	KIT NUMBER
1	5230031	1	-	PUMP ASSEMBLY, fuel (Vane type, See page 62 for repair parts)(Used on engines prior to #371-31595. Order PUMP ASSEMBLY 5175667)	
	5167750	-	1	PUMP ASSEMBLY, fuel (Rotor type. See page 63 for repair parts)(Used on engines prior to #471-30706. Order PUMP ASSEMBLY 5175667)	
	5175667	1	1	PUMP ASSEMBLY, fuel (Gear type. See page 64 for repair parts)(Started with engines #371-31595 and #471-30706)	
2	5171159	3	3	BOLT ASSEMBLY (Includes copper WASHER)	
3	5150193	1	1	GASKET, pump to blower	058034,37
4	5150199	1	1	FORK, coupling	
5	5154401	1	1	DISC, coupling	

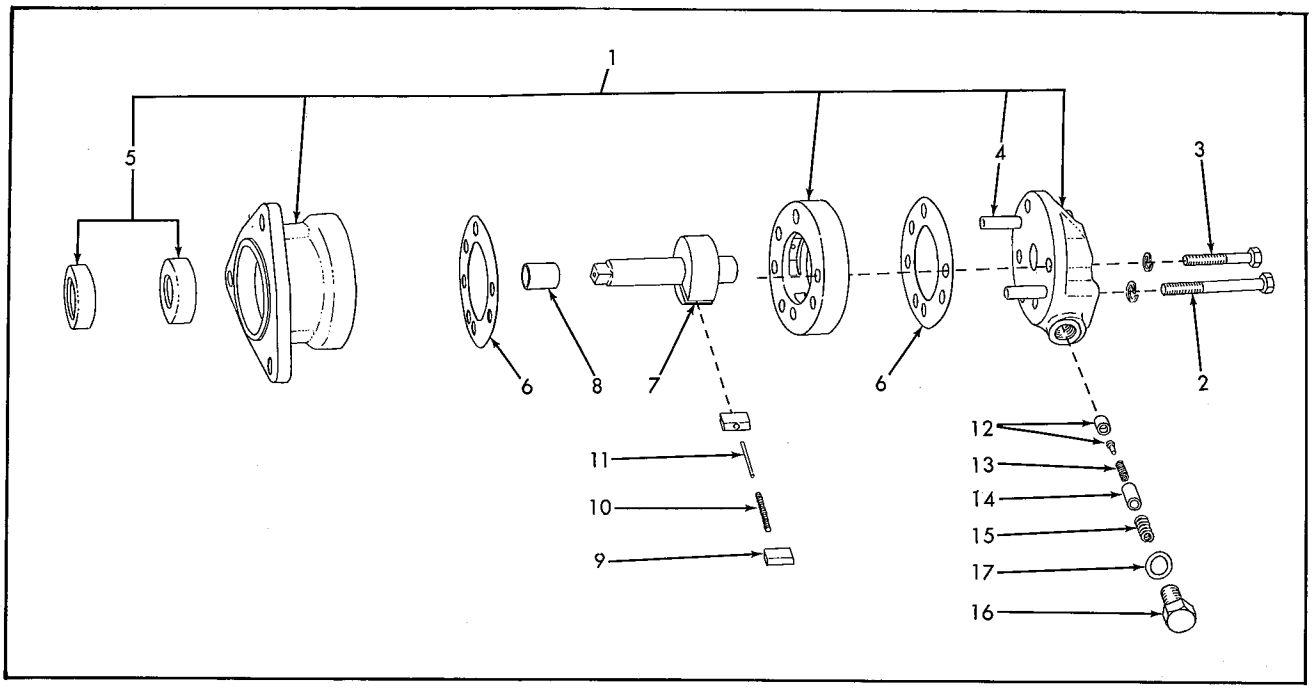

FUEL PUMP 5230031

USAGE: Model AD3 only. See page 61 for listing of complete PUMP ASSEMBLY.

ITEM	PART NUMBER	QTY.	DESCRIPTION	KIT NUMBER
1	5230050	1	BODY ASSEMBLY (Consists of 1 BODY, 1 front COVER, 1 rear COVER and items 4 and 5. Separate parts are not serviced because of doweled fit)	
2	054305	1	CAPSCREW, 1/4"NC x 2"	
	904204	1	LOCKWASHER, 1/4"	
3	054304	2	CAPSCREW, 1/4"NC x 1-1/4"	
	904204	2	LOCKWASHER, 1/4"	
4	5230029	2	PIN, dowel (standard size)	
	5230054	2	PIN, dowel (.005" oversize)	
5	5230007	2	SEAL, oil	
6	5230018	2	GASKET, body	058034,37
7	5178850	1	ROTOR ASSEMBLY (Includes item 8)	
8	5192649	1	SLEEVE, rotor shaft (Provides renewable seal surface for worn rotor shafts. Requires grinding rotor shaft to .415" diameter)	
9	5230020	2	VANE, rotor	
10	5230021	1	SPRING, rotor vane	
11	5230022	1	GUIDE, rotor vane spring	
12	5230010	1	VALVE ASSEMBLY, relief (1 VALVE and 1 SEAT)	
13	5230016	1	SPRING, relief valve (small)	
14	5230015	1	CAGE, relief valve	
15	5230014	1	SPRING, relief valve retaining (large)	
16	5230013	1	SCREW, relief valve retaining	
17	5226029	1	GASKET, relief valve retaining screw	058034,37

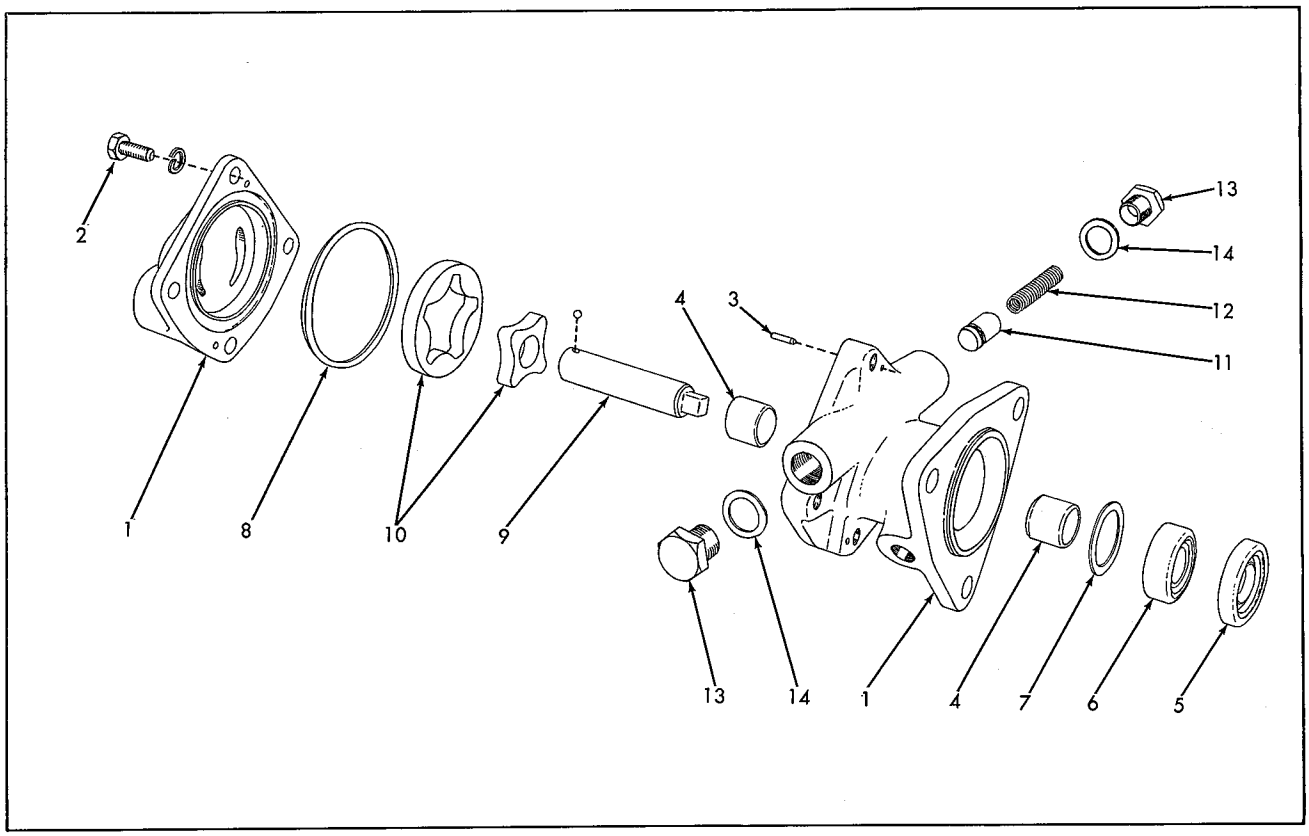

FUEL PUMP 5167750

USAGE: Model AD4 only. See page 61 for listing of complete PUMP ASSEMBLY.

ITEM	PART NUMBER	QTY.	DESCRIPTION	KIT NUMBER
1	5191838	1	BODY ASSEMBLY, fuel pump (Includes COVER and items 3 thru 7)	
2	047478	4	CAPSCREW, 1/4"NC x 5/8"	
	904204	4	LOCKWASHER, 1/4"	
3	5191849	2	PIN, dowel, pump body	
4	5191842	2	BUSHING, pump body	
5	5191843	1	SEAL, pump shaft - outer (1-1/8"O. D.)	
6	5192250	1	SEAL, pump shaft - inner (1"O. D.)	
7	5191850	1	GASKET, pump shaft - inner seal	
8	5191854	1	GASKET, pump body cover	
9	5191844	1	SHAFT, pump	
	905356	1	BALL, steel, 1/8" diam.	
10	5191845	1	ROTOR KIT, pump (Consists of 1 outer ROTOR and 1 inner ROTOR)	
11	5191851	1	VALVE, pressure relief	
12	5192279	1	SPRING, pressure relief	
13	5191853	2	PLUG, pressure relief	
14	5191855	2	GASKET, pressure relief plug	

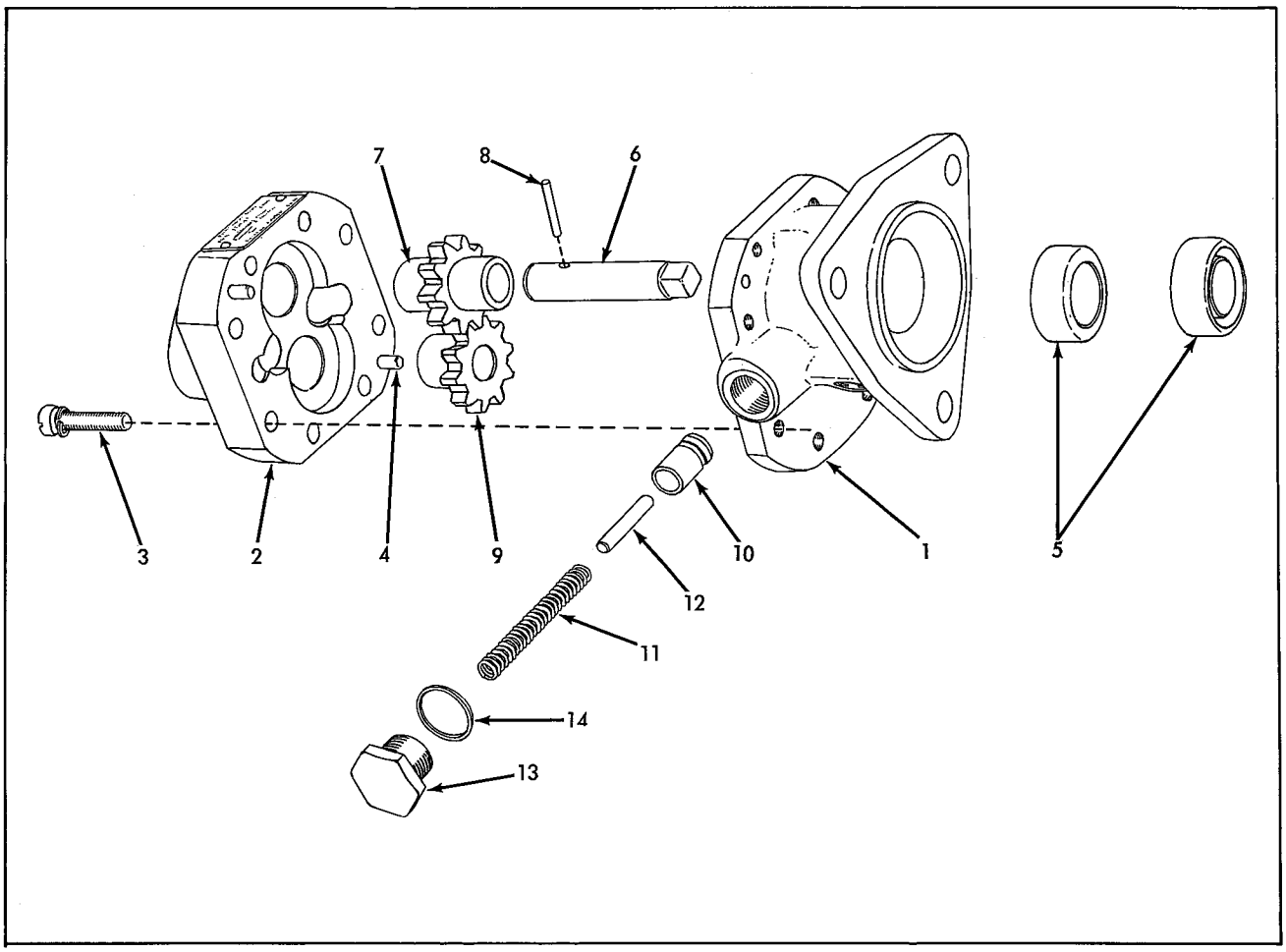

FUEL PUMP 5175667

USAGE: See page 61 for listing of complete PUMP ASSEMBLY.

ITEM	PART NUMBER	QTY.	DESCRIPTION	KIT NUMBER
1	------	1	STATOR (Not serviced. Order complete PUMP ASSEMBLY)	
2	------	1	HOUSING (Not serviced. Order complete PUMP ASSEMBLY)	
	914590	2	PLUG, expansion, 11/16" diam.	
3	5192813	8	BOLT ASSEMBLY (Includes LOCKWASHER)	
4	2225347	2	PIN, dowel, stator to housing (3/16" x 1")	
5	5192505	2	SEAL, pump shaft	
6	5192504	1	SHAFT, driving gear	
7	5192506	1	GEAR, driving	
8	5192786	1	PIN, shear (1/8" x 13/16")	
9	5192508	1	GEAR, driven	
10	2225351	1	PLUNGER, pressure relief	
11	5192509	1	SPRING, pressure relief plunger	
12	2225353	1	PIN, guiding, pressure relief spring (5/32" x 1")	
13	2225354	1	PLUG, pressure relief spring	
14	2225355	1	GASKET, pressure relief spring plug	

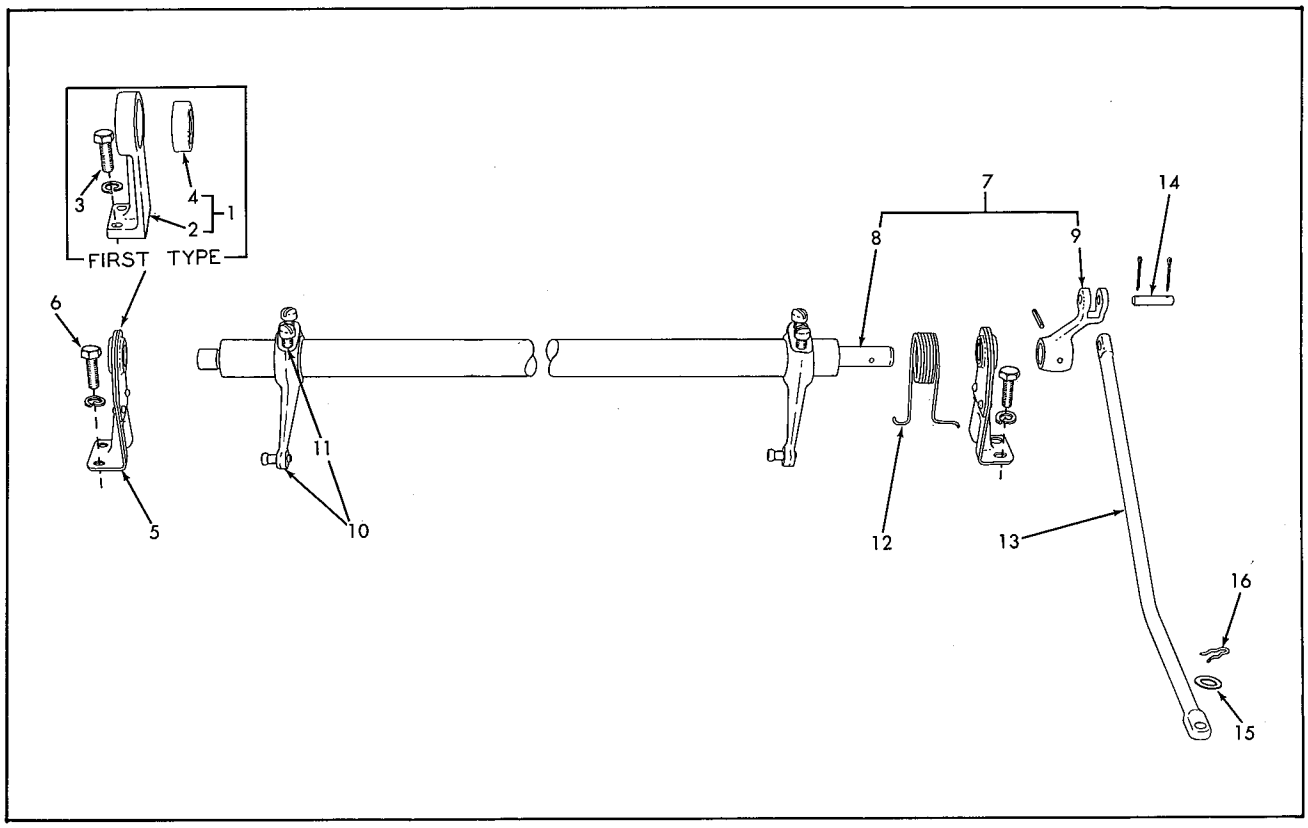

INJECTOR CONTROL

ITEM	PART NUMBER	QUANTITY AD3	QUANTITY AD4	DESCRIPTION	KIT NUMBER
				NOTE: Items 1 thru 4 were used on engines prior to #371-11603 only.	
1	5154356	2	-	BRACKET ASSEMBLY, control tube (Consists of items 2 and 4)	
2	5150264	2	-	BRACKET, control tube (cast type)	
3	034964	4	-	CAPSCREW, 1/4"NC x 3/4"	
	904204	4	-	LOCKWASHER, 1/4"	
4	042987	2	-	BEARING, ball, control tube bracket	
5	5161677	2	2	BRACKET ASSEMBLY, control tube (Riveted type. Includes plain BEARING. Serviced only as a unit)(Started with engine #371-11603)	
6	047478	4	4	CAPSCREW, 1/4"NC x 5/8"	
	904204	4	4	LOCKWASHER, 1/4"	
7	5190542	1	-	TUBE ASSEMBLY, injector control (Consists of items 8 & 9)	
	5190543	-	1	TUBE ASSEMBLY, injector control (Consists of items 8 & 9)	
8	------	1	1	TUBE, injector control (Not serviced. Order item 7)	
9	5150263	1	1	LEVER, injector control	
	910274	1	1	PIN, groove, 1/8" x 3/4"	
10	5150260	3	4	LEVER ASSEMBLY, injector control (Includes item 11)	
11	5153618	6	8	CAPSCREW, fil-hd., 1/4"NF x 3/4"	
12	5150994	1	1	SPRING, injector control tube	
13	5150990	1	1	LINK, governor to injector control lever	
14	5150265	1	1	PIN, control link	
	900970	2	2	PIN, cotter, 1/16" x 1/2"	
15	5150941	1	1	WASHER, control link retaining	
16	040403	1	1	CLIP, control link retaining	

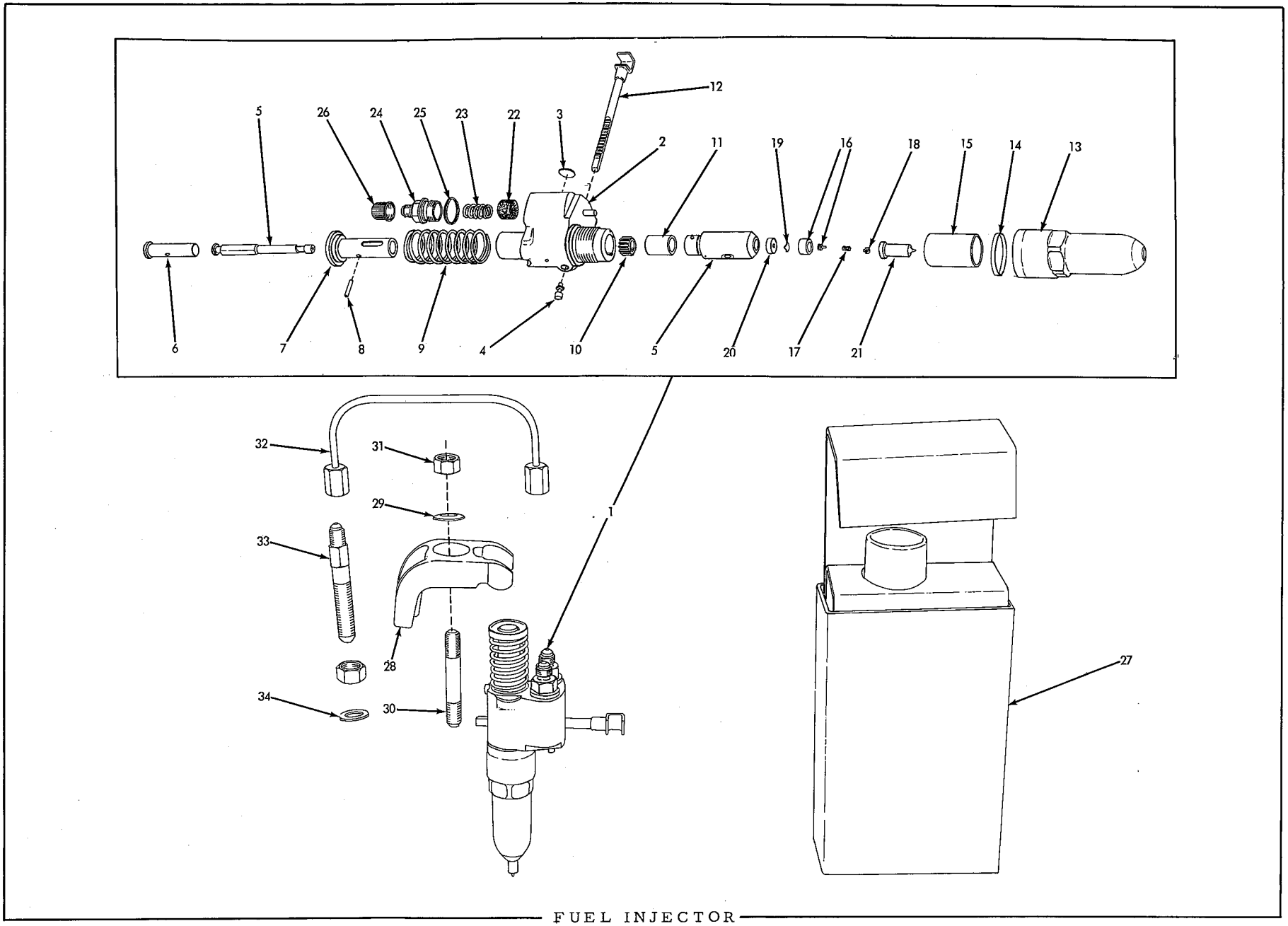

FUEL INJECTOR

FUEL INJECTOR

ITEM	PART NUMBER	QUANTITY AD3	QUANTITY AD4	DESCRIPTION	KIT NUMBER
1	5226710	3	4	INJECTOR ASSEMBLY, fuel (Consists of items 2 thru 27)	
2	5226913	3	4	BODY ASSEMBLY (Consists of 1 BODY ASSEMBLY 5227931 and 1 TAG 5227276)	
	5227931	3	4	BODY ASSEMBLY (Consists of 1 BODY and 1 PIN. Serviced only as a unit)	
3	5227276	3	4	TAG, identification (60mm., blue)	
4	5226717	3	4	PIN, plunger stop	
5	5226560	3	4	PLUNGER ASSEMBLY (Consists of 1 PLUNGER, 1 BUSHING and 1 PIN. Serviced only as a unit)	
6	5226394	3	4	FOLLOWER, plunger	
7	5226723	3	4	GUIDE, plunger follower	
8	5226397	3	4	PIN, plunger follower guide	
9	5226396	3	4	SPRING, plunger follower	
10	5226400	3	4	GEAR, plunger	
11	5226567	3	4	RETAINER, plunger gear	
12	5226719	3	4	RACK, control	
13	5226563	3	4	NUT	
14	5226564	3	4	RING, nut sealing	5191937
15	5226565	3	4	DEFLECTOR, fuel spill	
16	5227323	3	4	VALVE ASSEMBLY, fuel spray tip (1 VALVE and 1 SEAT. Serviced only as a unit)(When required for engines prior to #371-4929 order TIP KIT 5227324)	5227324
17	5226409	3	-	SPRING, fuel spray tip valve (15/32" long)(Not illustrated) (Used on engines prior to #371-4929)	
	5227210	3	4	SPRING, fuel spray tip valve (17/64" long)(Started with engine #371-4929)	5227324
18	5227287	3	-	STOP, fuel spray tip valve (Used on engines prior to #371-4929)	
	5227318	3	4	STOP, fuel spray tip valve (Started with engine #371-4929). . . .	5227324
19	5226411	3	4	VALVE, check	
20	5226570	3	4	SPACER, check valve	
21	5227321	3	4	TIP, fuel spray (When required for engines prior to #371-4929 order TIP KIT 5227324)	5227324
22	5228013	6	8	ELEMENT, fuel filtering	5191937
23	5226415	6	8	SPRING, retaining, fuel filtering element	
24	5226413	6	8	CAP, fuel filtering element	
25	5226186	6	8	GASKET, fuel filtering element cap.	5191937
26	5226414	6	8	CAP, shipping (Remove when installing INJECTOR)	
27	5227936	3	4	CARTON (For shipping and storing INJECTOR)	
28	5150249	3	4	CLAMP, injector	
29	5150250	3	4	WASHER, plain	
30	5150251	3	4	STUD (3/8"NC x 3/8"NF x 2-1/2")	
31	911041	3	4	NUT, 3/8"NF	

(Continued)

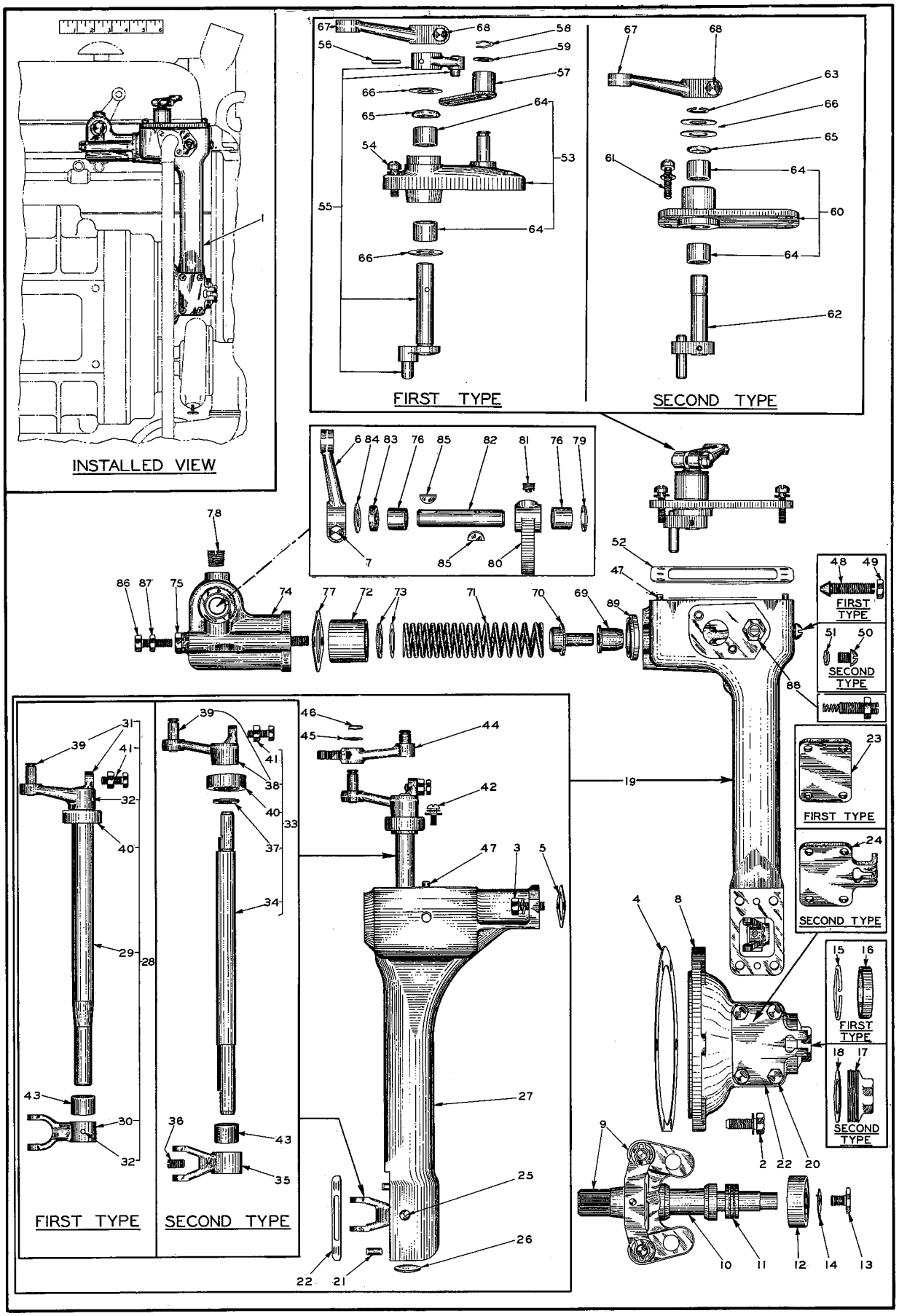

PLATE 1722A—GOVERNOR

FUEL INJECTOR (Cont'd)

ITEM	PART NUMBER	QUANTITY AD3	QUANTITY AD4	DESCRIPTION	KIT NUMBER
32	5151121	6	8	PIPE ASSEMBLY, injector fuel (Includes NUTS)	
33	5150566	6	8	CONNECTOR ASSEMBLY, fuel manifold (Includes item 34)	
	915633	6	8	NUT, lock, elastic stop, 7/16"NF	
34	5150568	6	8	WASHER, fuel pipe connector	

GOVERNOR
(See Plate 1722A)

NOTE: Where parts are different on the Models AD3 and AD4, only the AD3 part is illustrated. The AD4 part is identical, however, except for difference in length.

ITEM	PART NUMBER	AD3	AD4	DESCRIPTION	KIT NUMBER
1	5174438	1	-	GOVERNOR ASSEMBLY (Consists of items 8 thru 89)	
	5174440	-	1	GOVERNOR ASSEMBLY (Consists of items 8 thru 89)	
2	5171159	6	6	BOLT ASSEMBLY (Includes copper WASHER)	
3	034964	2	2	CAPSCREW, 1/4"NC x 3/4"	
	904204	2	2	LOCKWASHER, 1/4"	
4	5150246	1	1	GASKET, governor to blower	058034,37
5	5150269	1	1	GASKET, governor to cylinder head	058034,35,36 058037,38,39
6	5158432	1	1	LEVER, variable speed control	
7	905657	1	1	CAPSCREW, 1/4"NC x 1"	
	904204	1	1	LOCKWASHER, 1/4"	
8	5165781	1	-	HOUSING, weight (When required for engines prior to #371-8525 also order 1 CAP 5163097, 1 GASKET 5165221 and 1 COVER 5163514)	
	5165783	-	1	HOUSING, weight	
9	5174447	1	-	WEIGHT AND CARRIER ASSEMBLY (Includes SHAFT. Serviced only as a unit)(When required for engines prior to #371-29753 also order item 89)	
	5174448	-	1	WEIGHT AND CARRIER ASSEMBLY (Includes SHAFT. Serviced only as a unit)(When required for engines prior to #471-29649 also order item 89)	
10	5154501	1	-	RISER (1-3/8" long)	
	5154502	-	1	RISER (3" long)	
11	042989	1	1	BEARING, riser thrust	
12	074698	1	1	BEARING, ball, weight shaft (Used Eng. #3A-7578 & #4A-17382 & up)	
	040391	1	1	BEARING, ball, weight shaft (Used Eng. prior #3A-7578 & #4A-17382)	
13	5150884	1	1	SCREW, retaining	
14	5150897	1	1	LOCKWASHER	
15	5150911	1	-	RING, retaining, weight shaft bearing (Engines prior to #371-8525)	
16	5150906	1	-	CAP, weight housing (Engines prior to #371-8525)	
17	5163097	1	1	CAP, weight housing (Used Eng. #371-8525 thru #3A-7577 & on Eng. prior #4A-17382)	
	5183268	1	1	CAP, weight, housing (Used Eng. #3A-7578 & #4A-17382 & up)	
18	5165221	1	1	GASKET, weight housing cap (Started with engine #371-8525).	058034,37
19	5158904	1	1	HOUSING ASSEMBLY, control shaft (Consists of items 26, 27 and 33 thru 47)	
20	913299	4	4	CAPSCREW, 1/4"NC x 2-1/4" (Also attaches weight housing cover)	
	904204	4	4	LOCKWASHER, 1/4"	
21	5150942	2	2	PIN, dowel, control housing to weight housing	

(Continued)

ITEM	PART NUMBER	QUANTITY AD3	QUANTITY AD4	DESCRIPTION	KIT NUMBER
22	5150890	2	2	GASKET, weight housing (housing cover (1), control housing (1))	058034, 35, 36 058037, 38, 39
23	5150266	1	-	COVER, weight housing (Engines prior to #371-8525)	
24	5163514	1	1	COVER, weight housing (Started with engine #371-8525)	
25	913041	2	-	PLUG, expansion, 3/8" diam. (Used prior to March 1947)	
26	910002	1	1	PLUG, expansion, 3/4" diam.	
27	------	1	1	HOUSING, control shaft (Not serviced. Order item 19)	
				NOTE: Items 28 thru 32 were used on engines prior to #371-10296 only.	
28	5150913	1	-	SHAFT ASSEMBLY, control (Consists of items 29 thru 32, 40 and 41)	
29	------	1	-	SHAFT, control (Not serviced. Order item 28)	
30	------	1	-	FORK, control shaft (Not serviced. Order item 28)	
31	------	1	-	LEVER ASSEMBLY, control shaft (Includes item 39)(Not serviced. Order item 28)	
32	------	2	-	PIN, control shaft (Not serviced. Order item 28)	
				NOTE: Items 33 thru 38 were not used on engines prior to #371-10296.	
33	5154438	1	1	SHAFT ASSEMBLY, control (Consists of items 34, and 37 thru 41)	
34	5154435	1	1	SHAFT, control	
35	5154405	1	1	FORK, control shaft	
36	913889	1	1	SETSCREW, socket head, cup point, 1/4"NF x 1/2"	
37	5159080	1	1	WASHER, control shaft	
38	5154422	1	1	LEVER ASSEMBLY, control shaft	
39	5150943	1	1	PIN, control shaft lever	
40	042990	1	1	BEARING, ball, control shaft - upper	
41	5150898	1	1	SCREW, adjusting (hex head, 1/4"NF x 5/8")	
	910267	1	1	NUT, jam, 1/4"NF	
42	913048	1	1	SCREW, machine, round head, #10-24NC x 7/16"	
	906957	1	1	LOCKWASHER, internal teeth, #10	
	910243	1	1	WASHER, plain, SAE std., #10	
43	043021	1	1	BEARING, needle, control shaft - lower (1/2" lg.)(Used prior #3A-7578 & #4A-17382)	
	074699	2	2	BEARING, needle, fuel shut-off lever shaft (3/4"lg.)(Used #3A-7578 & #4A-17382 & up)	
44	5150394	1	1	LEVER ASSEMBLY, differential (Consists of 1 LEVER and 1 PIN. Serviced only as a unit)	
45	5150941	1	1	WASHER, retaining, differential lever	
46	040403	1	1	CLIP, retaining, differential lever	

(Continued)

ITEM	PART NUMBER	QUANTITY AD3	QUANTITY AD4	DESCRIPTION	KIT NUMBER
47	040397	2	-	PIN, dowel, control housing cover (1/8" x 3/8")(Engines prior to #371-4739)	
	5150942	2	2	PIN, dowel, control housing cover (3/16" x 7/16")(Started with engines #371-4739)	
48	-------	1	-	SCREW, load limit (Engines #371-1220 thru #371-4456. Not available. Order items 50 and 51)	
49	910980	1	-	NUT, jam, 5/16"NF	
50	048384	1	1	SCREW, machine, 5/16"NF x 3/8" (Started with engine #371-4457)	
51	040401	1	1	GASKET, control housing screw (Started with engine #371-4457)	
52	5150889	1	1	GASKET, control shaft housing cover	058034, 35, 36 058037, 38, 39
				NOTE: Items 53 thru 59 comprise the FIRST TYPE COVER ARRANGEMENT as used on engines prior to serial No. 371-29753 and 471-29649.	
53	-------	1	1	COVER ASSEMBLY, control housing (Includes 1 PIN and 2 BEARINGS 043021)(Order items 60, 62 and 63)	
54	5153407	4	4	CAPSCREW, fil-hd., 1/4"NC x 7/8"	
	904204	4	4	LOCKWASHER, 1/4"	
55	5153866	1	1	LEVER ASSEMBLY, shut-off (1 SHAFT, 1 LEVER, 2 PINS)	
56	914479	1	1	PIN, taper, #1 x 7/8"	
57	5152942	1	1	STOP, shut-off lever	
58	040403	1	1	CLIP, spring	
59	5150946	1	1	WASHER, plain	
				NOTE: Items 60 thru 63 comprise the SECOND TYPE COVER ARRANGEMENT as used on engines serial No. 371-29753 and up	
60	5174412	1	1	COVER ASSEMBLY, control housing (Includes items 64 and 65)	
61	901228	4	4	CAPSCREW, fil-hd., 1/4"NC x 3/4"	
	904204	4	4	LOCKWASHER, 1/4"	
62	5174425	1	1	SHAFT ASSEMBLY (Includes 1 LEVER and 2 PINS)	
63	5174429	1	1	RING, shaft retaining	
64	043021	2	2	BEARING, needle, fuel shut-off lever shaft	
65	5153059	1	1	PACKING, shut-off lever shaft (felt)(Used on engines prior to #3A-3807 and #4A-4266)	058034 058037
	5176557	1	1	SEAL, shut-off lever shaft (rubber)(Started with engines #3A-3807 and #4A-4266)	
66	5153060	2	2	WASHER, shut-off lever shaft	
67	5158432	1	1	LEVER, shut-off	
68	905657	1	1	CAPSCREW, 1/4"NC x 1"	
	904204	1	1	LOCKWASHER, 1/4"	
69	5152939	1	1	GUIDE, variable speed spring plunger	
70	5152938	1	1	PLUNGER, variable speed spring	
71	5152940	1	1	SPRING, variable speed	

(Continued)

GOVERNOR (Cont'd)

ITEM	PART NUMBER	QUANTITY AD3	QUANTITY AD4	DESCRIPTION	KIT NUMBER
72	5152941	1	1	RETAINER, variable speed spring	
73	5152962	1	1	SHIM, variable speed spring (.010" thick. Use as req'd)	
	5153904	1	1	SHIM, variable speed spring (.078" thick. Use as req'd)	
74	5153003	1	-	HOUSING ASSEMBLY, variable speed spring (Includes 2 BUSHINGS 5153004)(Used on engines prior to #371-25464)	
	5172552	1	1	HOUSING ASSEMBLY, variable speed spring (Includes 2 BEARINGS 043021)(Started with engine #371-25464)	
75	040378	2	2	CAPSCREW, 5/16"NC x 3-1/2"	
	904205	2	2	LOCKWASHER, 5/16"	
76	5153004	2	-	BUSHING, variable speed spring housing (Used on engines prior to #371-25464)	
	043021	2	2	BEARING, needle, variable speed spring housing (Started with engine #371-25464)	
77	5152944	1	1	GASKET, variable speed spring housing	058034, 37
78	910230	1	1	PLUG, pipe, slotted head, 1/8"NPT (Used on early units only)	
	911081	1	1	PLUG, pipe, slotted head, 1/4"NPT (Used on late units)	
79	910002	1	1	PLUG, expansion, 3/4" diam.	
80	5153002	1	1	LEVER, variable speed spring (no keyway)(Engines prior to #3A-2577 and #4A-2228)	
	5176629	1	1	LEVER, variable speed spring (keywayed)(Started with engines #3A-2577 and #4A-2228)	
81	5152239	1	1	SETSCREW, variable speed lever (taper point, 5/16"NF x 1/2")(Used on engines prior to #3A-2577 and #4A-2228)	
	915476	1	1	SETSCREW, socket head, dog-pt., 5/16"NF x 1/4" (Started with engines #3A-2577 and #4A-2228)	
82	5173964	1	1	SHAFT, variable speed lever (When required for engines prior to #3A-2577 and #4A-2228 also furnish 1 LEVER 5176629, 1 SETSCREW 915476 and 1 KEY 910173)	
83	5153007	1	1	PACKING, variable speed lever shaft	
84	5152932	1	1	WASHER, variable speed lever shaft packing	
85	910173	2	2	KEY, #2 woodruff, 3/32" x 1/2" (1 less used on engines prior to #3A-2577 and #4A-2228)	
86	5179613	1	1	BOLT, idling speed adjustment (1/4"NC x 1-1/4")	
87	911325	1	1	NUT, jam, 1/4"NC	
88	5177083	1	1	SCREW ASSEMBLY, buffer (Consists of 1 SCREW, 1 SPRING and 1 NUT. Serviced only as a unit)	
89	5171784	1	1	STOP, variable speed spring retainer (Used only when necessary to limit high speed)	

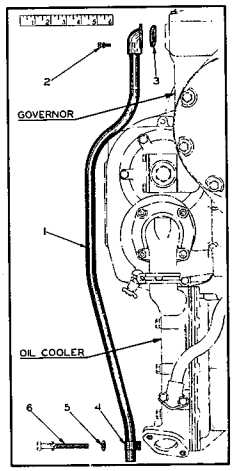

PLATE 1759

ENGINE BREATHING PIPE

ITEM	PART NUMBER	QUANTITY AD3	QUANTITY AD4	DESCRIPTION	KIT NUMBER
1	5154104	1	1	PIPE, breathing	
2	901217	2	2	SCREW, machine, fil-hd., #10NC x 5/8"	
	904203	2	2	LOCKWASHER, #10	
3	5150900	1	1	GASKET, breathing pipe	058034, 35, 36 058037, 38, 39
4	040404	1	1	CLIP, breathing pipe (single, closed type, 5/8" diam., 11/32" bolt hole)	
5	910335	1	1	WASHER, plain, SAE std., 5/16"	
6	------	1	1	CAPSCREW (See OIL COOLER)	

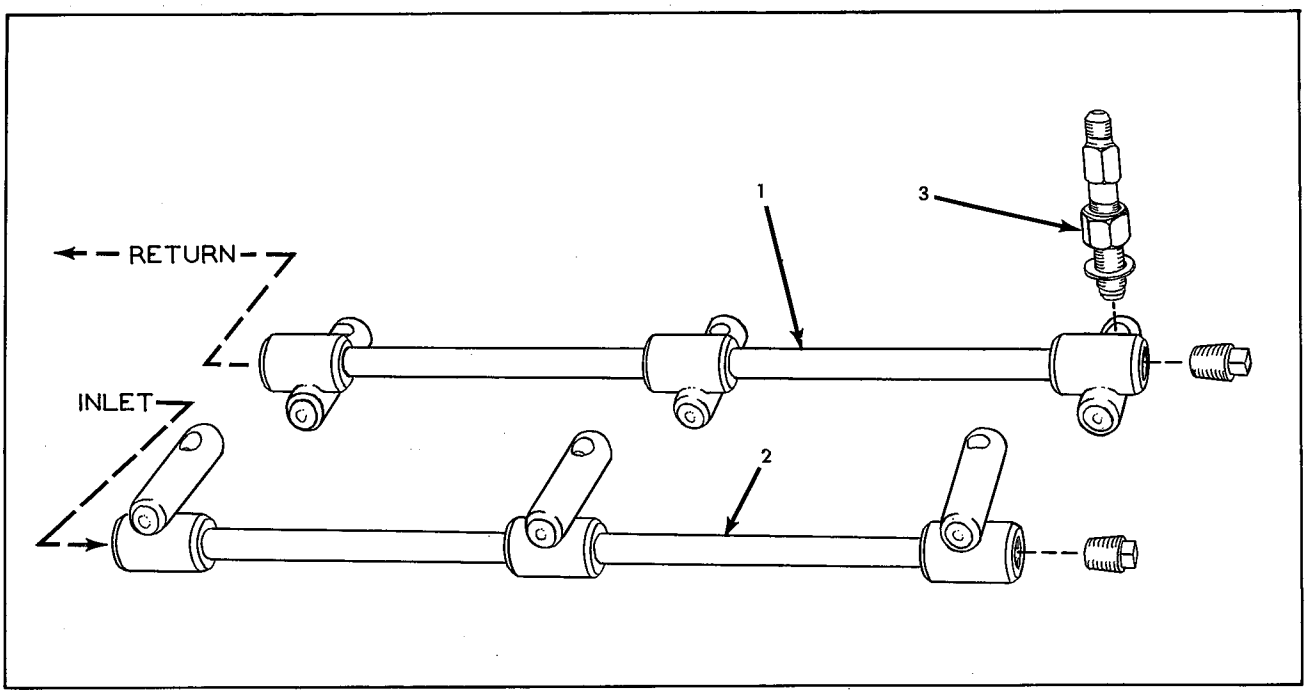

FUEL MANIFOLDS

ITEM	PART NUMBER	QUANTITY AD3	QUANTITY AD4	DESCRIPTION	KIT NUMBER
1	5150558	1	-	MANIFOLD, upper	
	5150560	-	1	MANIFOLD, upper (Not illustrated)	
	901652	1	1	PLUG, pipe, 1/4"NPT	
2	5150557	1	-	MANIFOLD, lower	
	5150559	-	1	MANIFOLD, lower (Not illustrated)	
	901652	1	1	PLUG, pipe, 1/4"NPT	
3	------	6	8	CONNECTOR ASSEMBLY (See INJECTOR)	

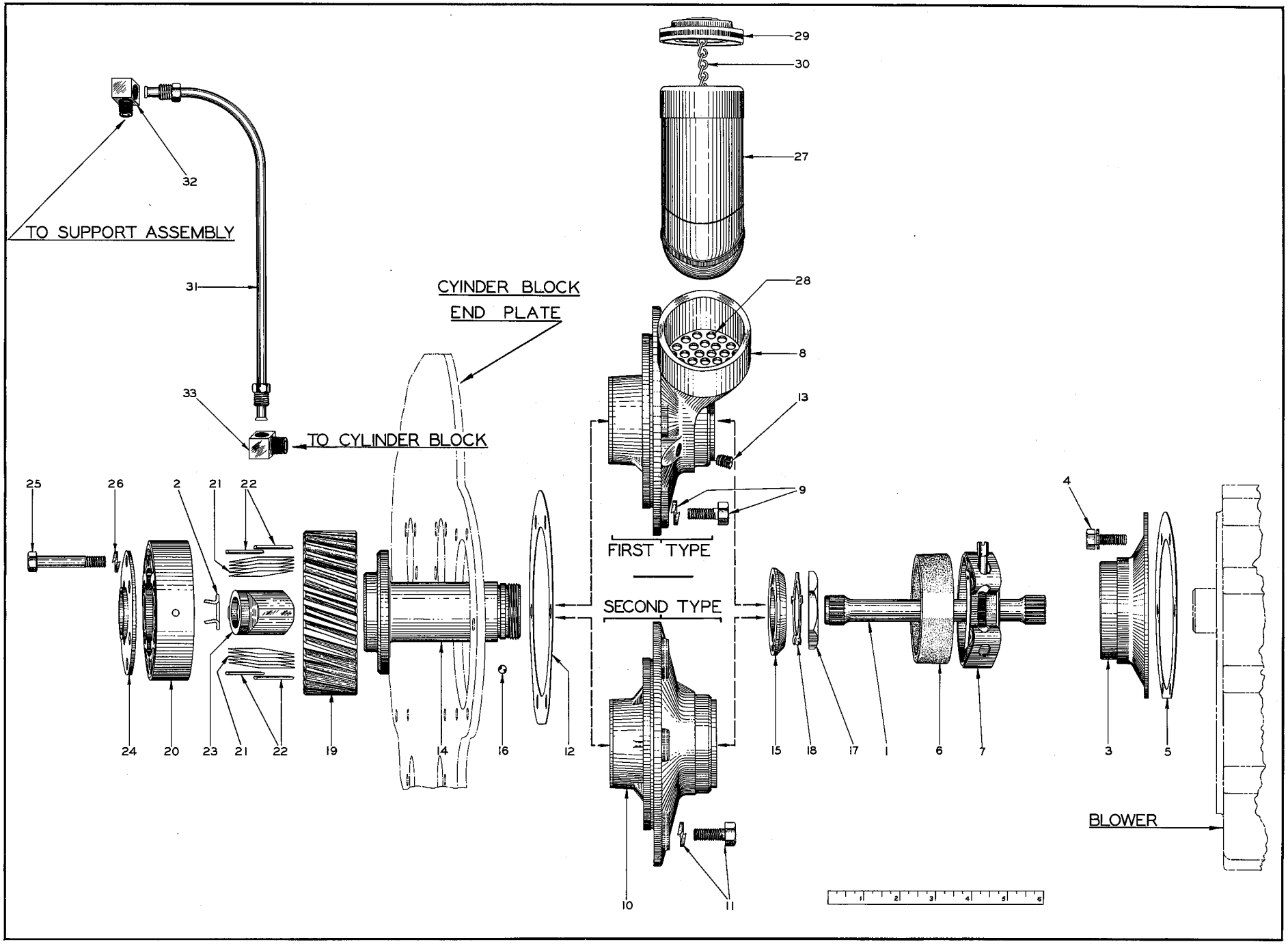

PLATE 1350A—BLOWER DRIVE

BLOWER DRIVE
(See Plate 1350A)

ITEM	PART NUMBER	QUANTITY AD3	QUANTITY AD4	DESCRIPTION	KIT NUMBER
1	5154638	1	-	SHAFT (6-3/16" long)	
	5154639	-	1	SHAFT (7-13/16" long)	
2	5167727	1	1	RING, snap, drive shaft	
3	-------	1	-	COVER, drive shaft (1-15/16" long)(Used on engines prior to #371-23901. Order 1 COVER 5172867, 1 SEAL 5172864 and 1 CLAMP 5173695)	
	5172867	1	-	COVER, drive shaft (1-5/16" long)(Used on engines #371-23901 and up)	
	5172868	-	1	COVER, drive shaft (2-15/16" long)	
4	5171159	6	6	BOLT ASSEMBLY (Includes copper WASHER)	
5	5150246	1	1	GASKET, drive shaft cover	058034, 37
6	-------	1	-	PACKING, drive shaft cover (Rubber ring. Not illustrated) (Used on engines prior to #371-23901. Order SEAL KIT 5192248)	
	5172864	1	-	SEAL, drive shaft cover (Rubber sleeve, shoulder type. Not illustrated)(Used on engines #371-23901 thru #371-27259). .	5192248
	5172865	1	1	SEAL, drive shaft cover (Rubber sleeve, plain type)(Started with engine #371-27260)	
7	5173695	1	1	CLAMP, cover seal (Started with engine #371-23901)	5192248
8	5172871	1	-	SUPPORT ASSEMBLY (Bushing is not serviced separately) (For graders prior to #328. Also order 1 SEAL 5172865, 1 CLAMP 5173695 and 1 COVER 5172867 to assure fit)	
9	5153347	2	-	CAPSCREW, 3/8"NF x 13/16"	
	904206	2	-	LOCKWASHER, 3/8"	
10	5155114	1	-	SUPPORT ASSEMBLY (Bushing is not serviced separately) (Started with grader #328 but later superseded on engine #371-27260)(Not illustrated)	
	5172870	1	1	SUPPORT ASSEMBLY (Bushing is not serviced separately) (Started with engine #371-27260)	
11	5153347	2	2	CAPSCREW, 3/8"NF x 13/16"	
	904206	2	2	LOCKWASHER, 3/8"	
12	5150286	1	1	GASKET, support	058034, 37
13	910230	1	-	PLUG, pipe, slotted head, 1/8"NPT (Used on graders prior to #328)	
14	5150279	1	1	HUB, gear	
15	5158901	1	1	WASHER, thrust	
16	912738	1	1	BALL, steel, 7/32" diam.	
17	5152804	1	1	NUT, gear hub locking	
18	5150281	1	1	LOCKWASHER, gear hub nut	
19	5150522	1	-	GEAR (32 teeth. 41° helix. Not illustrated)(Used on engines prior to #371-3858)	
	5173320	1	1	GEAR (40 teeth, 19° helix)(Started with engine #371-3858)	
20	5150345	1	1	SUPPORT, coupling	
21	5150347	42	42	SPRING, coupling	
22	5150346	4	4	SEAT, coupling spring	

(Continued)

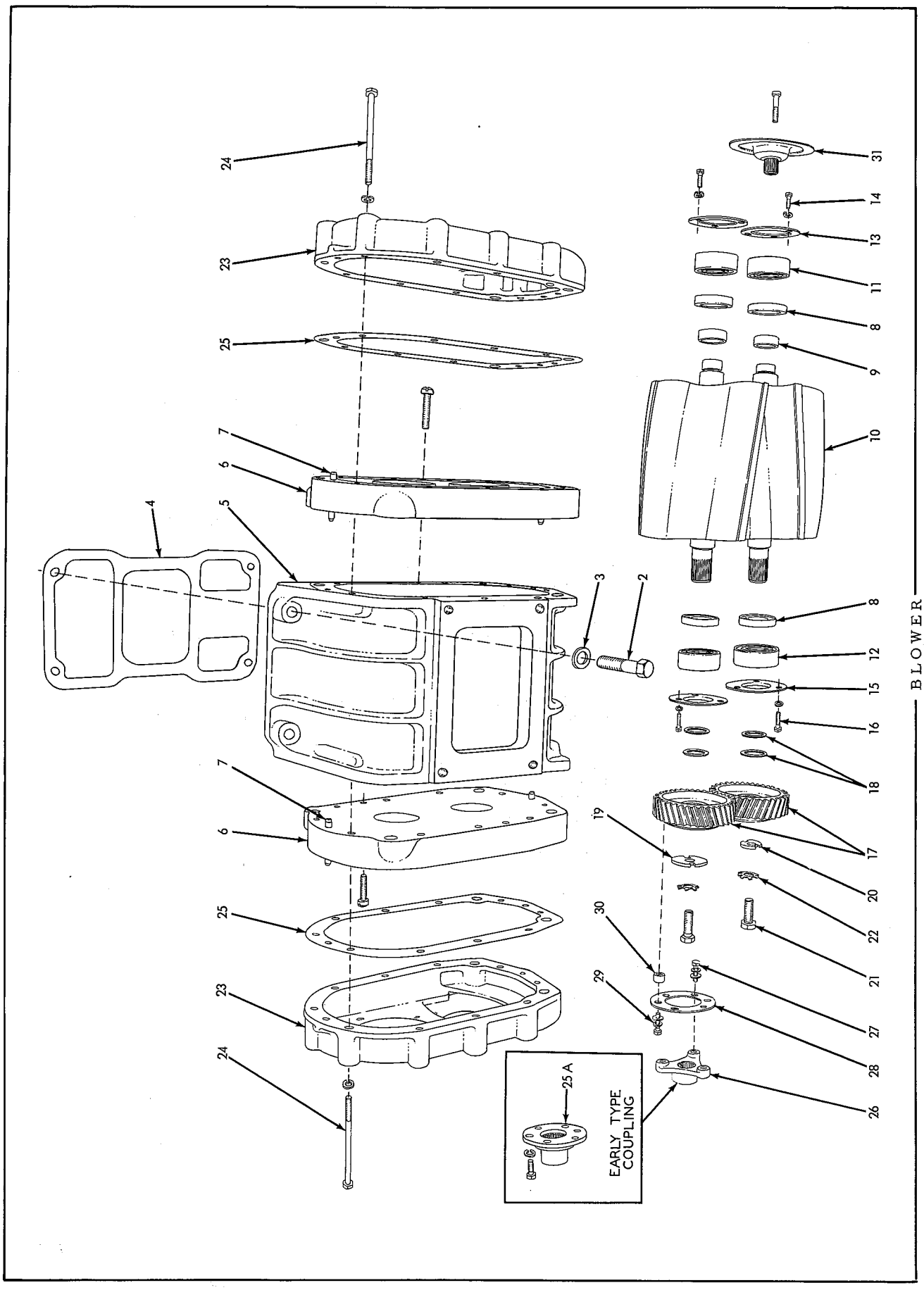
24
23
25
7
6
4
5
3
2
7
6
25
23
24
31
14
13
11
8
9
10
8
12
15
16
18
17
20
22
21
19
30
29
27
28
26
25 A
EARLY TYPE COUPLING

BLOWER

BLOWER DRIVE (Cont'd)

ITEM	PART NUMBER	QUANTITY AD3	QUANTITY AD4	DESCRIPTION	KIT NUMBER
23	5150348	1	1	CAM, coupling	
24	5150349	1	1	RETAINER, coupling	
25	5150350	6	6	BOLT, coupling (5/16"NF x 2")	
26	904205	6	6	LOCKWASHER, 5/16"	
27	5160971	1	-	TUBE, oil filler (Graders prior to #328 only)	
28	5150147	1	-	STRAINER, oil filler (Graders prior to #328 only)	
29	5156498	1	-	CAP, oil filler (Includes GASKET)(Graders prior to #328 only)	
30	5151373	1	-	CHAIN, oil filler cap (Graders prior to #328 only)	
31	5150433	1	1	PIPE ASSEMBLY, oil (Includes NUTS)	
32	913039	1	1	ELBOW, inverted flare, male, 90°, 1/4" tube, 1/8"NPT	
33	913040	1	1	ELBOW, inverted flare, male, 90°, 1/4" tube, 1/4"NPT	

BLOWER

NOTE: Where parts are different on the Models AD3 and AD4, only the AD3 part is illustrated. The AD4 part is identical, however, except for difference in length.

1	5158145	1	-	BLOWER ASSEMBLY (Consists of items 5 thru 31)	
	5158146	-	1	BLOWER ASSEMBLY (Consists of items 5 thru 31)	
2	041916	4	4	CAPSCREW, 7/16"NC x 2"	
3	5150238	4	4	WASHER, plain	
4	5150235	1	-	GASKET, blower to cylinder block	058034
	5150236	-	1	GASKET, blower to cylinder block	058037
5	5155865	1	-	HOUSING (When required for engines prior to #371-3519 also order ROTOR SET 5190009)	
	5157199	-	1	HOUSING	
6	5150218	2	2	PLATE ASSEMBLY, end (Includes items 7 and 8)	
	901240	4	4	CAPSCREW, fil-hd., 5/16"NC x 1-1/2"	
7	-------	4	4	PIN, dowel (Not serviced separately)	
8	5150220	4	4	SEAL, oil (1-3/16" shaft diam. Original Equipment)	
	5192438	4	4	SEAL, oil (1-3/8" shaft diam. For use when rotor shaft is too worn to permit use of standard SEAL 5150220. Also order SPACER 5192439 to make initial installation)	
9	5192439	4	4	SPACER (Provides new seal surface for worn rotor shafts. Requires use of oil SEAL 5192438)	
10	5192793	1	-	ROTOR SET (Consists of 1 upper ROTOR and 1 lower ROTOR, matched for proper operating clearance)	
	5192794	-	1	ROTOR SET (Consists of 1 upper ROTOR and 1 lower ROTOR, matched for proper operating clearance)	
11	042986	2	2	BEARING, ball - front (Used on engines prior to #3A-5160 and #4A-6616)	
	7450168	2	2	BEARING, roller - front (Started with engines #3A-5160 and #4A-6616)	

(Continued)

ITEM	PART NUMBER	QUANTITY AD3	QUANTITY AD4	DESCRIPTION	KIT NUMBER
12	042991	2	2	BEARING, ball - rear	
13	5150863	2	2	RETAINER, front bearing (Used on engines prior to #3A-5160 and #4A-6616)	
	5179017	2	2	RETAINER, front bearing (Started with engines #3A-5160 and #4A-6616)	
14	034964	6	6	CAPSCREW, 1/4"NC x 3/4"	
	904204	6	6	LOCKWASHER, 1/4"	
15	5150222	2	2	RETAINER, rear bearing	
16	034964	6	6	CAPSCREW, hex-hd., 1/4"NC x 3/4"	
	904204	6	6	LOCKWASHER, 1/4"	
17	5192234	1	1	GEAR SET (Gears are matched and are not serviced separately)	
18	5150372	-	-	SHIM, rotor gear (.002" thick. Use as req'd)	
	5153938	-	-	SHIM, rotor gear (.003" thick. Use as req'd)	
	5150855	-	-	SHIM, rotor gear (.005" thick. Use as req'd)	
	5150856	-	-	SHIM, rotor gear (.010" thick. Use as req'd)	
19	5154400	1	1	WASHER, retaining, upper rotor gear	
20	-------	1	1	DISC, coupling (See FUEL PUMP)	
21	5154399	2	2	CAPSCREW, hex-hd., 1/2"NF x 1-1/4"	
22	5154398	2	2	LOCKWASHER, special	
23	5150233	2	2	COVER, end plate	
24	040378	20	20	CAPSCREW, hex-hd., 5/16"NC x 3-1/2"	
	904205	20	20	LOCKWASHER, 5/16"	
25	5150234	2	2	GASKET, end plate cover	058034,37
				NOTE: The following comprise the FIRST TYPE Blower Coupling as used on engines prior to Serial #371-27467 and #471-26805.	
25A	------	1	1	HUB, driving (Order HUB KIT 5192441 or 5192751)	
	910167	6	6	CAPSCREW, 5/16"NF x 3/4"	
	904205	6	6	LOCKWASHER, 5/16"	
				NOTE: Items 26 thru 30 comprise the SECOND TYPE Blower Coupling which started with engines serial #371-27467 and #471-26805.	
26	5173366	1	1	HUB, driving	5192441 5192751
27	5173362	3	3	BOLT (hex-hd., 5/16"NF x 3/4")	5192441 5192751
	904205	3	3	LOCKWASHER, 5/16"	5192441 5192751
	910335	3	3	WASHER, plain, SAE std., 5/16"	5192441 5192751
28	5173365	1	2	PLATE, driving hub	5192441 5192751
29	5173363	3	3	BOLT (hex-hd., 5/16"NF x 1")	5192441 5192751
	904205	3	3	LOCKWASHER, 5/16"	5192441 5192751
	910335	3	3	WASHER, plain, SAE std., 5/16"	5192441 5192751
30	5173364	3	3	SPACER, driving hub plate	5192441 5192751
31	-------	1	1	COUPLING (See WATER PUMP)	

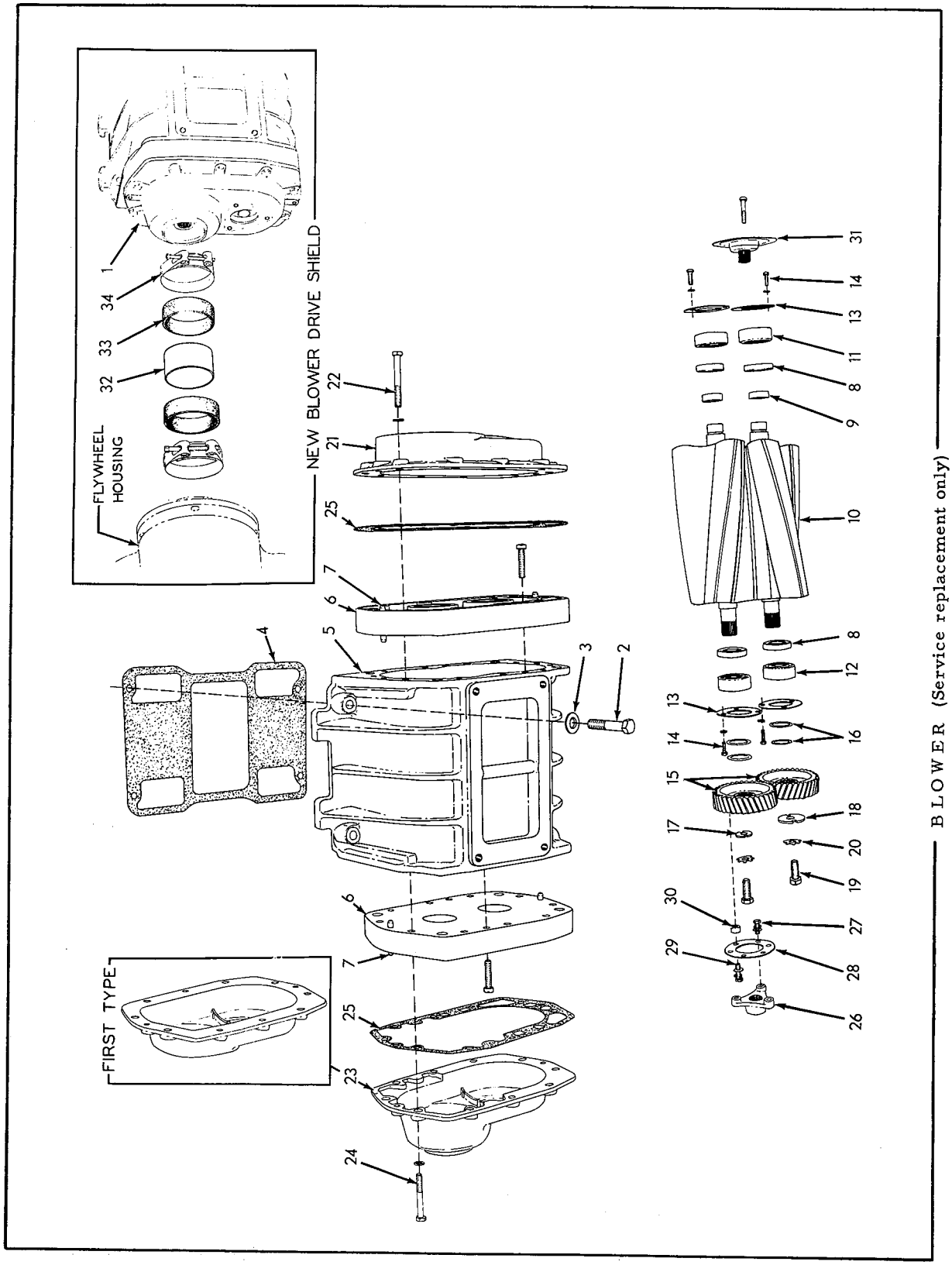

BLOWER (Service replacement only)

(Added Nov. 1959)

BLOWER

USAGE: Service replacement only. See previous pages for design used as original equipment.

* Used prior to (Models AD3 and AD30)
** Used prior to August 1959 (Models AD4 and AD40)
*** Effective (Models AD3 and AD30)
**** Effective August 1959 (Models AD4 and AD40)

ITEM	PART NUMBER	QTY. *	**	***	****	DESCRIPTION	PACKAGE NUMBER
-	5114467	1	-	-	-	BLOWER ASSEMBLY (Consists of items 5 thru 31)	
-	5114468	-	1	-	-	BLOWER ASSEMBLY (Consists of items 5 thru 31)	
1	5120991	-	-	1	-	BLOWER ASSEMBLY (Consists of items 5 thru 31)	
	5120992	-	-	-	1	BLOWER ASSEMBLY (Consists of items 5 thru 31)	
2	041916	4	4	4	4	CAPSCREW, 7/16"NC x 2"	
3	5150238	4	4	4	4	WASHER, plain	
4	5150235	1	-	1	-	GASKET, blower to cylinder block	058034 074688
	5115657	-	1	-	1	GASKET, blower to cylinder block	058037 074689
5	5155865	1	-	1	-	HOUSING	
	5114200	-	1	-	1	HOUSING	
6	5193719	2	2	2	2	PLATE ASSEMBLY, end (Includes item 7)	
	901240	4	4	4	4	CAPSCREW, fil-hd., 5/16"NC x 1-1/2"	
7	------	4	4	4	4	PIN, dowel (Not serviced separately)	
8	5150220	4	4	4	4	SEAL, oil (1-3/16" shaft diam. Original equipment)	
	5192438	4	4	4	4	SEAL, oil (1-3/8" shaft diam. For use when rotor shaft is too worn to permit use of standard SEAL 5150220. Also order SPACER 5192439 to make initial installation)	
9	5192439	4	4	4	4	SPACER (Provides new seal surface for worn rotor shafts. Requires use of oil SEAL 5192438)	
10	5192793	1	-	1	-	ROTOR SET (Consists of 1 upper rotor and 1 lower rotor, matched for operating clearance)	
	5192794	-	1	-	1	ROTOR SET (Consists of 1 upper rotor and 1 lower rotor, matched for operating clearance)	
11	7451054	2	2	2	2	BEARING, roller, front	
12	042991	2	2	2	2	BEARING, ball, rear	
13	5199017	4	4	4	4	RETAINER, bearing	
14	034964	12	12	12	12	CAPSCREW, 1/4"NC x 3/4"	
	904204	12	12	12	12	LOCKWASHER, 1/4"	

BLOWER (Continued)

ITEM	PART NUMBER	QTY. *	**	***	****	DESCRIPTION	PACKAGE NUMBER
15	5192234	1	1	1	1	GEAR SET (Gears are matched and are not serviced separately).	
16	5150372	-	-	-	-	SHIM, rotor gear (.002" thick. Use as req'd)	
	5153938	-	-	-	-	SHIM, rotor gear (.003" thick. Use as req'd)	
	5150855	-	-	-	-	SHIM, rotor gear (.005" thick. Use as req'd)	
	5150856	-	-	-	-	SHIM, rotor gear (.010" thick. Use as req'd)	
17	5154400	1	1	1	1	WASHER, retaining, upper rotor gear	
18	------	1	1	1	1	DISC, coupling (See FUEL PUMP AND DRIVE)	
19	070469	2	2	2	2	CAPSCREW, gear retaining (1/2"NF x 1-1/4")	
20	5154398	2	2	2	2	LOCKWASHER, gear retaining capscrew	
21	5114442	1	1	1	1	COVER, end plate, front	
22	5115190	10	10	10	10	BOLT ASSEMBLY, 5/16"NC x 2-1/2" (Includes lockwasher)	
23	5114442	1	1	-	-	COVER, end plate, rear	
	5120726	-	-	1	1	COVER, end plate, rear	
24	5115190	10	10	10	10	BOLT ASSEMBLY, 5/16"NC x 2-1/2" (Includes lockwasher)	
25	5114726	2	2	2	2	GASKET, end plate cover	
26	5173366	1	1	1	1	HUB, driving	
27	5173362	3	3	3	3	BOLT (5/16"NF x 3/4")	
	904205	3	3	3	3	LOCKWASHER, 5/16"	
	910335	3	3	3	3	WASHER, plain, SAE std., 5/16"	
28	5173365	1	2	1	2	PLATE, driving hub	
29	5173363	3	3	3	3	BOLT (5/16"NF x 1")	
	904205	3	3	3	3	LOCKWASHER, 5/16"	
	910335	3	3	3	3	WASHER, plain, SAE std., 5/16"	
30	5173364	3	3	3	3	SPACER, driving hub plate	
31	------	1	1	1	1	COUPLING (See WATER PUMP)	
32	5118354	-	-	-	1	TUBE, blower drive shaft	
33	5172865	-	-	1	2	SEAL, blower drive shaft tube	
34	5173695	-	-	1	2	CLAMP, tube seal	

(Added Nov. 1959)

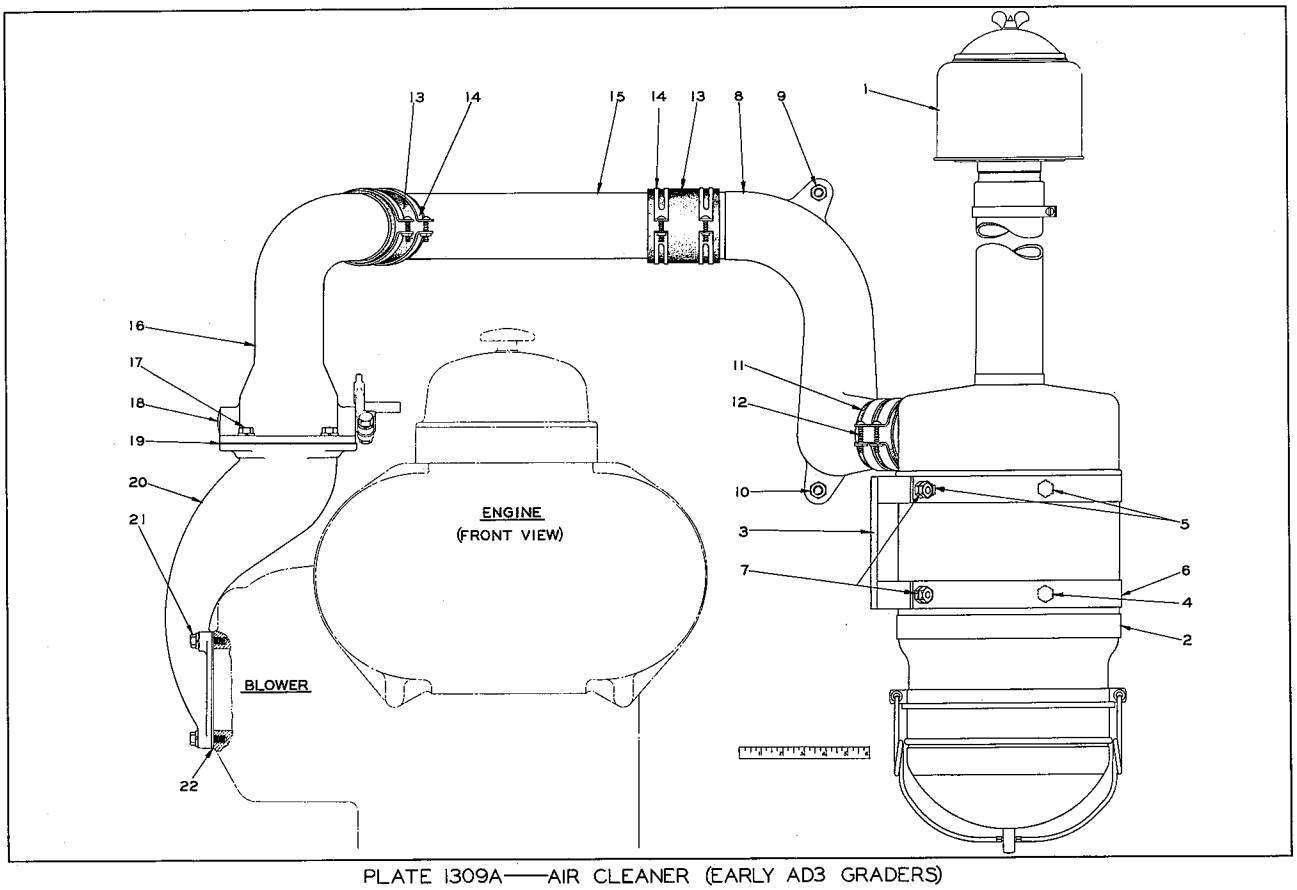

PLATE 1309A——AIR CLEANER (EARLY AD3 GRADERS)

AIR CLEANER
(See Plate 1309A)

USAGE: Model AD3 Graders prior to serial No. 328

ITEM	PART NUMBER	QTY.	DESCRIPTION	KIT NUMBER
1	604944	1	PRE-CLEANER ASSEMBLY, air (Used on graders prior to #234) (See page 84 for repair parts)	
	044988	1	PRE-CLEANER ASSEMBLY, air (Used on graders after #233)(See page 84 for repair parts)	
2	604946	1	CLEANER ASSEMBLY, air (See page 85 for repair parts)	
3	604933	1	BRACKET, air cleaner mounting	
4	903630	1	CAPSCREW, 3/8"NC x 1"	
	911026	1	NUT, 3/8"NC	
	904206	1	LOCKWASHER, 3/8"	
5	903631	2	CAPSCREW, 3/8"NC x 1-1/4"	
	911026	2	NUT, 3/8"NC	
	904206	2	LOCKWASHER, 3/8"	
6	604938	2	STRAP, air cleaner mounting	
7	903631	4	CAPSCREW, 3/8"NC x 1-1/4"	
	903584	8	NUT, jam, 3/8"NC	
8	604919	1	ELBOW, air inlet	
9	903630	1	CAPSCREW, 3/8"NC x 1"	
	911026	1	NUT, 3/8"NC	
	904206	1	LOCKWASHER, 3/8"	
10	903631	1	CAPSCREW, 3/8"NC x 1-1/4"	
	911026	1	NUT, 3/8"NC	
	904206	1	LOCKWASHER, 3/8"	
11	604939	1	HOSE, air cleaner (2-3/4" I. D. x 2" long)	
12	910250	2	CLAMP, hose, 3-1/8" I. D.	
13	041557	2	HOSE, air cleaner tube (3" I. D. x 3-1/4" long)	

(Continued)

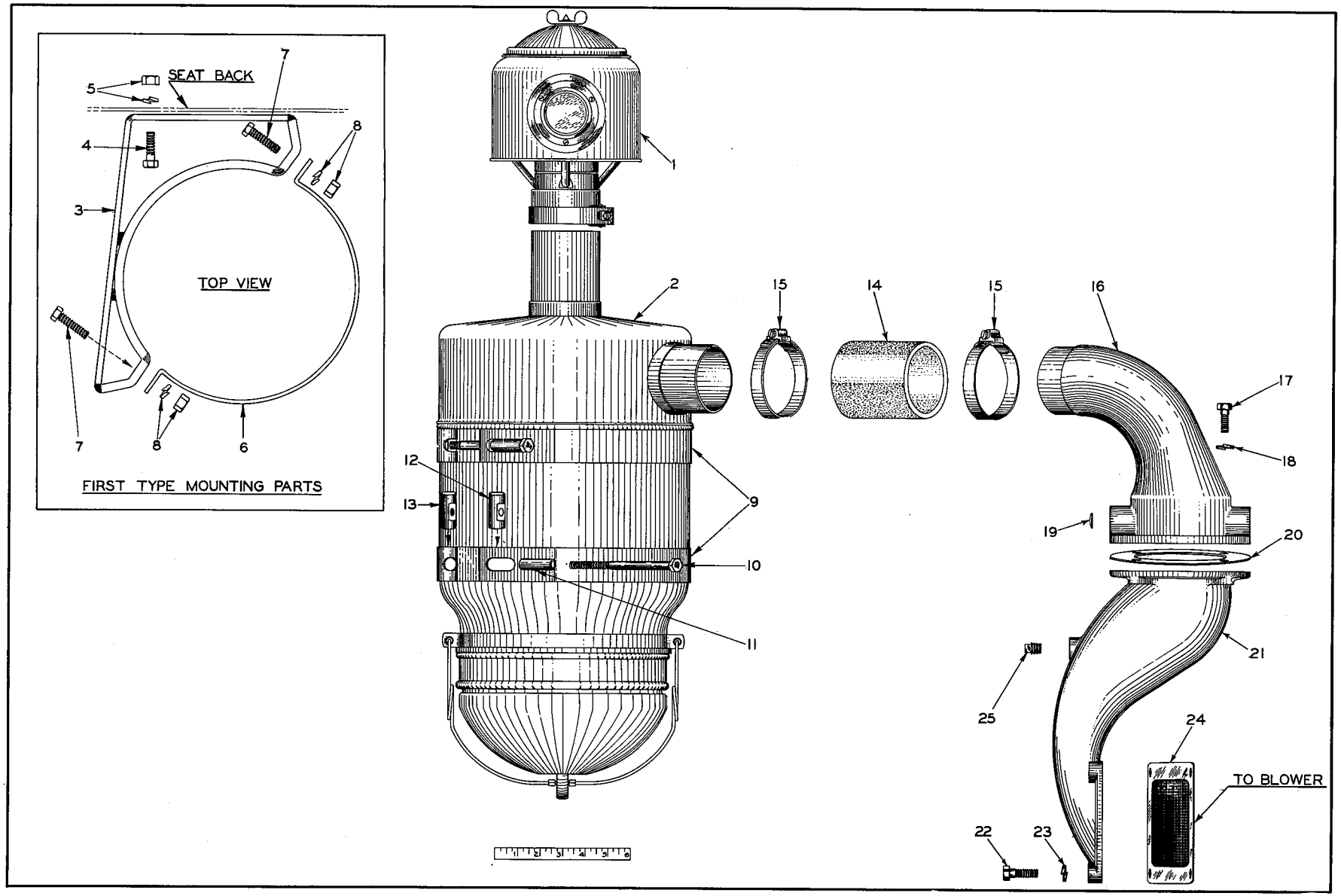

PLATE 1310B—— AIR CLEANER (AD3 GRADERS)

AIR CLEANER (Cont'd)

ITEM	PART NUMBER	QTY.	DESCRIPTION	KIT NUMBER
14	913220	4	CLAMP, hose, 3"I. D.	
15	604248	1	TUBE, air cleaner connecting	
16	605457	1	ELBOW, air intake	
17	903630	4	CAPSCREW, 3/8"NC x 1"	
	904206	4	LOCKWASHER, 3/8"	
18	910001	1	PLUG, expansion, 5/8" diam.	
19	040118	1	GASKET, air intake elbow	058034
20	065975	1	HOUSING, air inlet (Also order 1 PLUG 901652 to close primer hole)	
21	903631	4	CAPSCREW, 3/8"NC x 1-1/4"	
	904206	4	LOCKWASHER, 3/8"	
22	5150779	1	SCREEN, blower (also serves as air inlet housing GASKET)	058034

AIR CLEANER
(See Plate 1310B)

USAGE: Model AD3 Graders serial No. 328 and up.

1	044988	1	PRE-CLEANER ASSEMBLY, air (See page 85 for repair parts)
2	050988	1	CLEANER ASSEMBLY, air (10" diam.)(Used on graders prior to #553, and graders #563 thru #588)(See page 84 for repair parts)
	047883	1	CLEANER ASSEMBLY, air (11" diam.)(Used on graders #553 thru #562, and on graders after #588)(See page 84 for repair parts)
3	604933	2	BRACKET, air cleaner mounting (Used on graders prior to #553, and on graders #563 thru #588)
4	903631	3	CAPSCREW, 3/8"NC x 1-1/4"
5	911026	3	NUT, 3/8"NC
	904206	3	LOCKWASHER, 3/8"
6	604938	2	STRAP, air cleaner mounting (Used on graders prior to #553, and on graders #563 thru #588)
7	903632	4	CAPSCREW, 3/8"NC x 1-1/2"
8	911026	4	NUT, 3/8"NC
	904206	4	LOCKWASHER, 3/8"
			NOTE: Items 9 thru 13 were used only on graders #553 thru #562, and graders after #588)
9	052090	2	BAND, air cleaner mounting
10	053668	2	CAPSCREW, hex-head, 3/8"NC x 5"
11	053667	2	SPACER, mounting band screw
12	050735	2	PIN, mounting band (plain hole)
13	050734	2	PIN, mounting band (threaded hole)
14	041557	1	HOSE, air cleaner (3"I. D. x 3-1/4" long)
15	605828	2	CLAMP, hose (3-3/8" diam.)
16	605732	1	ELBOW, air intake
17	903630	4	CAPSCREW, 3/8"NC x 1"
18	904206	4	LOCKWASHER, 3/8"
19	910001	1	PLUG, expansion, 5/8" diam.
20	040118	1	GASKET, air intake elbow 058034
21	065975	1	HOUSING, air inlet (When required for graders prior to #2768 also order item 25)
22	903631	4	CAPSCREW, 3/8"NC x 1-1/4"
23	904206	4	LOCKWASHER, 3/8"

(Continued)

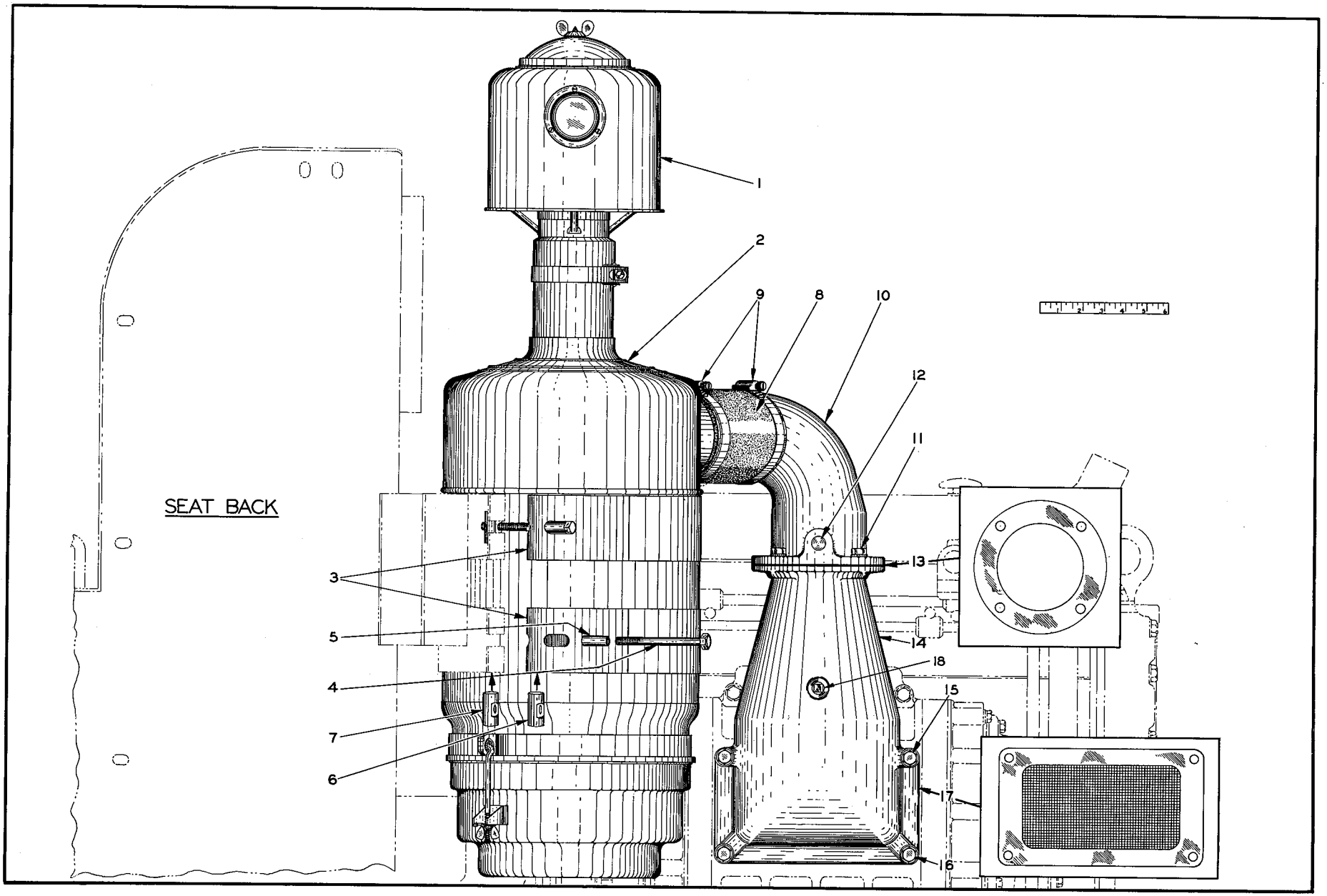

PLATE 1739A—— AIR CLEANER (AD4 GRADERS)

AIR CLEANER (Cont'd)

ITEM	PART NUMBER	QTY.	DESCRIPTION	KIT NUMBER
24	5150779	1	SCREEN, blower (also serves as air inlet housing GASKET.	058034
25	901652	1	PLUG, pipe, 1/4"NPT (Primer connection hole)	

AIR CLEANER
(See Plate 1739A)

USAGE: Model AD4 Graders only.

1	055341	1	PRE-CLEANER ASSEMBLY, air (See page 85 for repair parts)
2	059295	1	CLEANER ASSEMBLY, air (12" diam.)(See page 84 for repair parts)
3	059259	2	BAND, air cleaner mounting
4	040570	4	CAPSCREW, 3/8"NC x 4-1/4" (Not for graders with hood side plates)
	903634	2	CAPSCREW, 3/8"NC x 2" } For Graders with hood side plates only
	903777	2	CAPSCREW, 3/8"NC x 4" } For Graders with hood side plates only
5	053667	4	SPACER, mounting band screw (Not for graders with hood side plates)
6	050735	4	PIN, mounting band (plain hole)
7	050734	4	PIN, mounting band (threaded hole)
8	051517	1	HOSE, air cleaner (4" I. D. x 5-1/2" long)
9	061952	2	CLAMP, hose, adjustable, 3-7/8" to 4-3/4" diam.
10	051518	1	ELBOW, air intake
11	903630	4	CAPSCREW, 3/8"NC x 1"
	904206	4	LOCKWASHER, 3/8"
12	910001	1	PLUG, expansion, 5/8" diam.
13	040118	1	GASKET, air intake elbow. 058037
14	065976	1	HOUSING, air inlet (When required for graders prior to #2769 also order item 18)
15	904281	2	CAPSCREW, 3/8"NC x 2-1/4"
	904206	2	LOCKWASHER, 3/8"
16	910245	2	CAPSCREW, 3/8"NC x 1-3/8"
	904206	2	LOCKWASHER, 3/8"
17	5150780	1	SCREEN, blower (also serves as air inlet housing GASKET) 058037
18	901652	1	PLUG, pipe, 1/4"NPT (Primer connection hole)

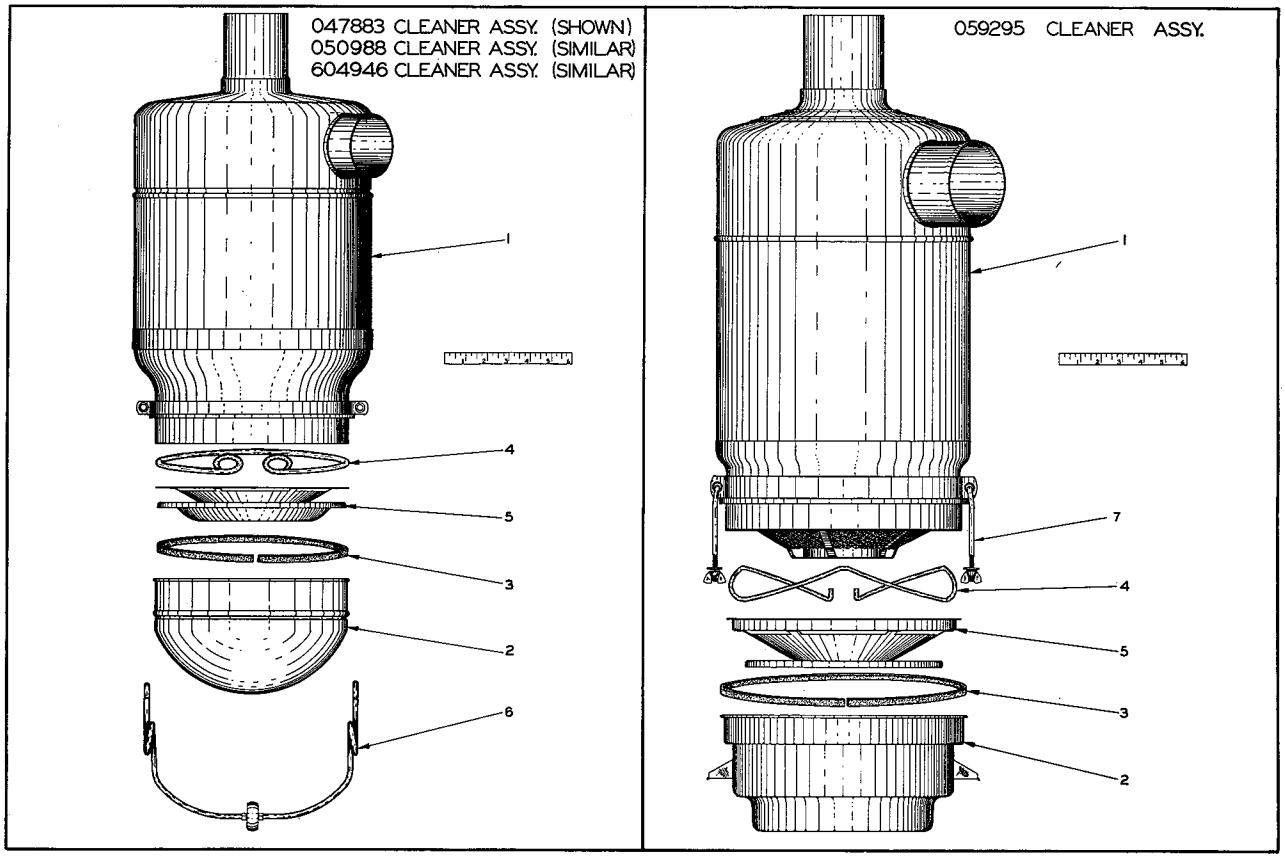

PLATE 1736A — AIR CLEANER PARTS

AIR CLEANER PARTS
(See Plate 1736A)

604946 CLEANER ASSEMBLY (Early AD3. See page 79)
050988 CLEANER ASSEMBLY (Early AD3. See page 81)
047883 CLEANER ASSEMBLY (AD3. See page 81)
059295 CLEANER ASSEMBLY (AD4. See page 83)

ITEM	PART NUMBER	QUANTITY 604946	050988	047883	059295	DESCRIPTION	KIT NUMBER
1	------	1	1	1	1	BODY (Not serviced. Order complete air CLEANER)	
2	040352	1	1	1	-	CUP, oil	
	067642	-	-	-	1	CUP, oil	
3	040354	1	1	1	-	GASKET, oil cup	
	059292	-	-	-	1	GASKET, oil cup	
4	040360	1	1	1	-	RING, baffle retaining	
	059291	-	-	-	1	RING, baffle retaining	
5	040359	1	1	1	-	BAFFLE	
	059297	-	-	-	1	BAFFLE	
6	040353	1	1	1	-	BAIL ASSEMBLY, oil cup (Consists of 1 BAIL and 1 ROLLER)	
7	059294	-	-	-	1	BOLT ASSEMBLY, oil cup (Includes WASHER and NUT)	

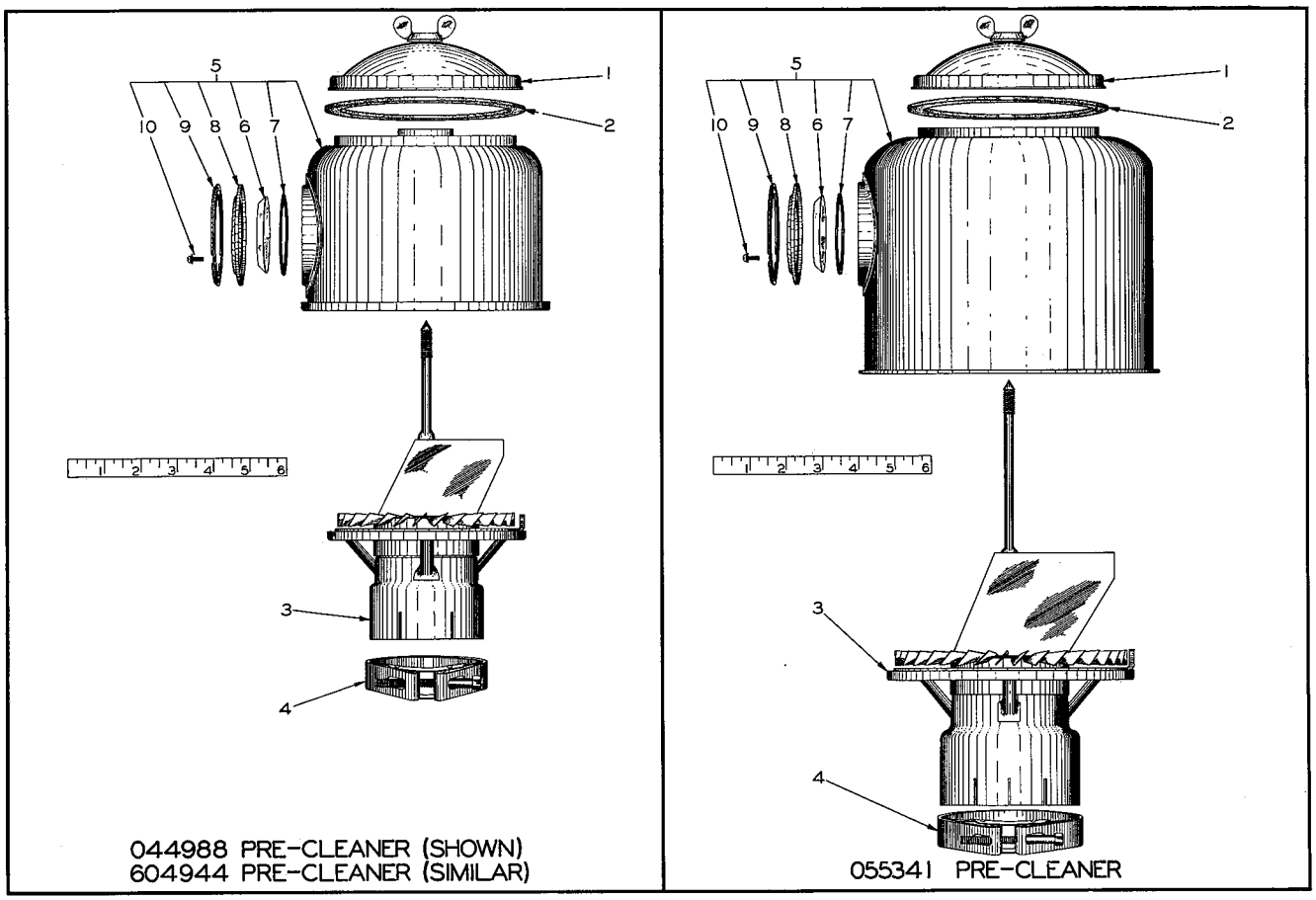

PLATE 1735A——— AIR PRE-CLEANER PARTS

AIR PRE-CLEANER PARTS
(See Plate 1735A)

604944 PRE-CLEANER ASSEMBLY (Early AD3. See page 79)
044988 PRE-CLEANER ASSEMBLY (AD3. See pages 79 and 81)
055341 PRE-CLEANER ASSEMBLY (AD4. See page 83)

ITEM	PART NUMBER	QUANTITY 604944	QUANTITY 044988	QUANTITY 055341	DESCRIPTION	KIT NUMBER
1	044255	1	1	1	CAP ASSEMBLY (Consists of 1 CAP and 1 NUT)	
2	044256	1	1	1	GASKET, cap	
3	044257	1	1	-	BODY	
	058725	-	-	1	BODY	
4	065411	1	1	-	CLAMP ASSEMBLY (Includes SCREW and NUT)	
	065413	-	-	1	CLAMP ASSEMBLY (Includes SCREW and NUT)	
5	------	1	-	-	SHELL (No window. Not illustrated)(Order SHELL ASSEMBLY 044918)	
	044918	-	1	-	SHELL ASSEMBLY (Includes items 6 thru 10)	
	058723	-	-	1	SHELL ASSEMBLY (Includes items 6 thru 10)	
6	043860	-	1	1	GLASS, shell window	
7	043852	-	1	1	GASKET, shell window glass	
8	043853	-	1	1	RETAINER, shell window glass	
9	043991	-	1	1	RING, shell window glass retainer	
10	043856	-	3	3	SCREW ASSEMBLY (Includes LOCKWASHER)	

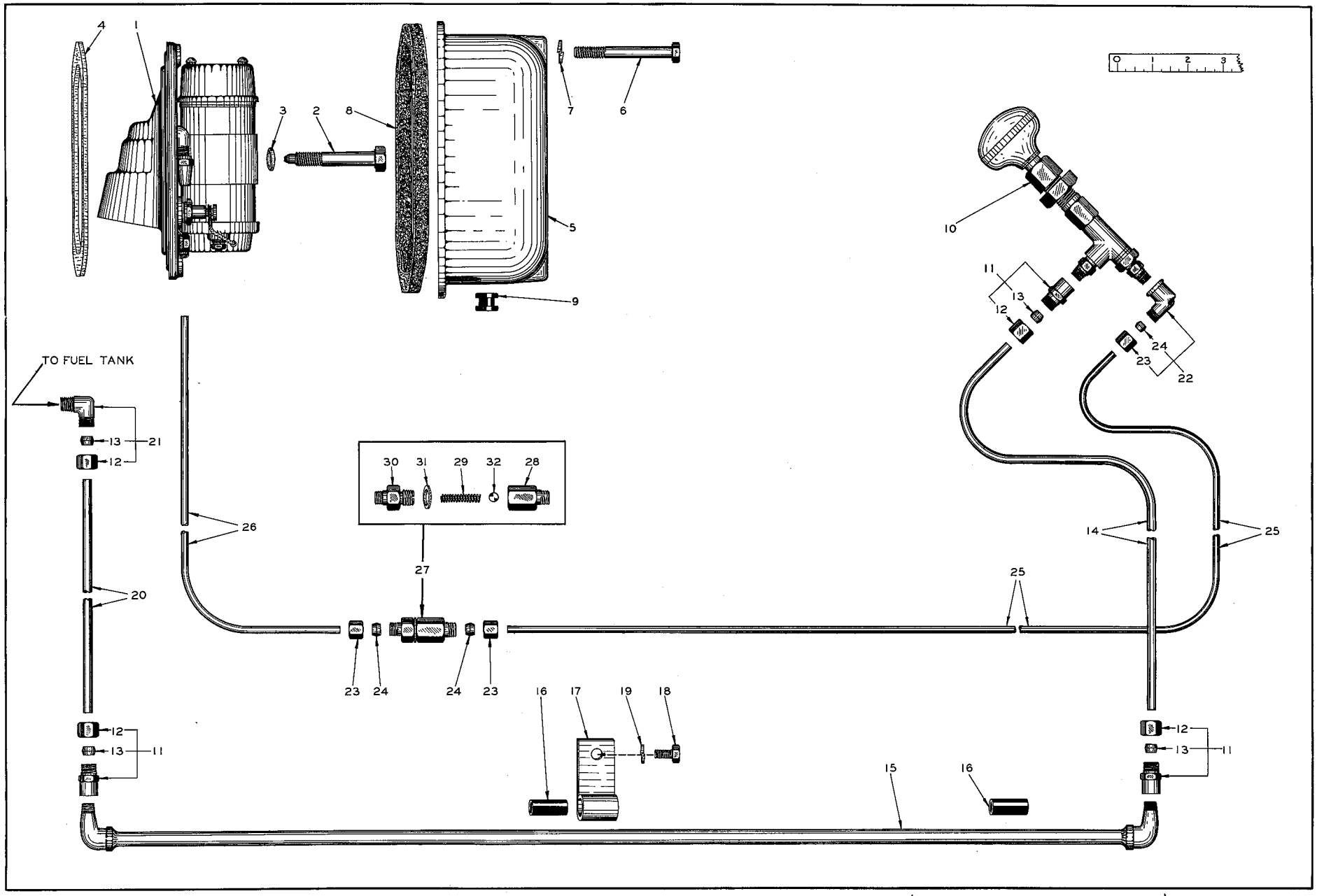

PLATE 1361A—AIR HEATER, PUMP AND LINES (EARLY AD3 GRADERS)

AIR HEATER SYSTEM
(See Plate 1361A)

USAGE: Model AD3 Graders prior to serial No. 328.

ITEM	PART NUMBER	QTY.	DESCRIPTION	KIT NUMBER
1	5153383	1	HEATER ASSEMBLY, engine air (See page 96 for repair parts)	
2	5153139	1	BOLT	
3	040400	1	GASKET (copper-asbestos)	058034
4	5150020	1	GASKET, air heater to block (cork)	058034
5	5158071	1	COVER, air heater (steel)	
6	913189	2	CAPSCREW, 5/16"NC x 2-7/8"	
7	904205	2	LOCKWASHER, 5/16"	
8	5154066	1	GASKET, air heater cover (felt)	
9	023176	1	GROMMET, air heater cable (rubber)	
10	5151922	1	PUMP ASSEMBLY, air heater (Discontinuted. Order PUMP ASSEMBLY 066782)(See page 92 for repair parts)	
11	910213	3	CONNECTOR, female, compression, 1/4" tube, 1/8"NPT (Includes NUT and SLEEVE)	
12	911437	4	NUT, compression fitting, 1/4" tube	
13	911435	4	SLEEVE, compression fitting, 1/4" tube	
14	604815	1	TUBE, pump to fuel pipe (copper, 1/4"O. D. x 47")	
15	604817	1	PIPE, fuel supply (30" long)	
16	600182	2	SLEEVE, fuel supply pipe (rubber)	
17	------	1	CLIP, fuel supply pipe (single, closed type, 1/2" diam., 5/16" bolt hole)(Not available)	
18	905655	1	CAPSCREW, 1/4"NC x 1/2"	
19	904204	1	LOCKWASHER, 1/4"	
20	604816	1	TUBE, fuel pipe to air heater (copper, 1/4"O. D. x 13")	
21	911018	1	ELBOW, male, compression, 1/4" tube, 1/4"NPT (Includes NUT and SLEEVE)	
22	913474	1	ELBOW, female, compression, 3/16" tube, 1/8"NPT (Includes NUT and SLEEVE)	
23	912064	3	NUT, compression fitting, 3/16" tube	
24	912367	3	SLEEVE, compression fitting, 3/16" tube	
25	------	1	TUBE, pump to check valve (copper, 3/16"O. D. x 74")(Order 1 VALVE ASSEMBLY 048604 and 1 TUBE 051191)	
26	------	1	TUBE, check valve to air heater (copper, 3/16"O. D. x 43")(Order 1VALVE ASSEMBLY 048604 and 1 TUBE 051191)	
27	------	1	VALVE ASSEMBLY, check, fuel supply tube (Consists of items 28 thru 32)(Order 1 VALVE ASSEMBLY 048604 and 1 TUBE 051191)	
28	------	1	BODY, check valve (Order 1 VALVE ASSEMBLY 048604 and 1 TUBE 051191)	
29	------	1	SPRING, check valve (Order 1VALVE ASSEMBLY 048604 and 1 TUBE 051191)	
30	------	1	HOUSING, check valve spring (Order 1VALVE ASSEMBLY 048604 and 1TUBE 051191)	
31	5151910	1	WASHER, check valve spring housing	
32	905358	1	BALL, steel, 1/4" diam.	

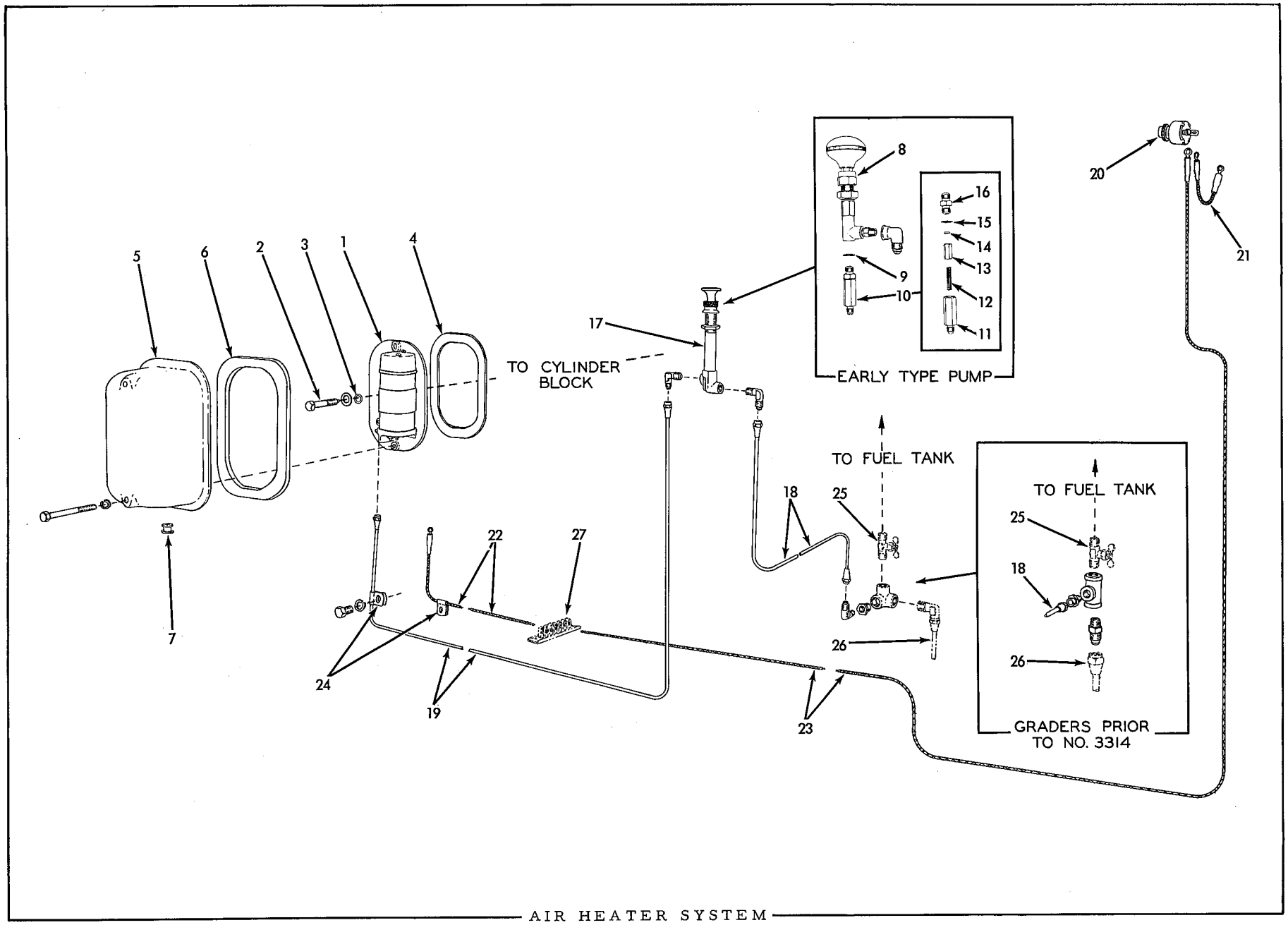

AIR HEATER SYSTEM

AIR HEATER SYSTEM

USAGE: Standard on Model AD3 Graders serial No. 328 thru 2767. Standard on Model AD4 Graders prior to serial No. 2768. Optional on later machines in place of standard Engine Primer System.

ITEM	PART NUMBER	QUANTITY AD3	QUANTITY AD4	DESCRIPTION	KIT NUMBER
1	5153383	1	1	HEATER ASSEMBLY, engine air (See page 96 for repair parts)	
2	5153139	1	1	BOLT	
	911115	1	1	WASHER, plain, SAE std., 3/8"	
3	040400	1	1	GASKET, attaching bolt	058034, 37
4	5150020	1	1	GASKET, air heater to block	058034, 37
5	5158071	1	1	COVER, air heater	
	913189	2	2	CAPSCREW, 5/16"NC x 2-7/8"	
	904205	2	2	LOCKWASHER, 5/16"	
6	5154066	1	1	GASKET, air heater cover (felt)	
7	023176	1	1	GROMMET, air heater cover	
				NOTE: Items 8 thru 16 comprise the EARLY TYPE PUMP ARRANGEMENT as used on graders built prior to May 1949.	
8	048661	1	1	PUMP ASSEMBLY (See page 92 for repair parts)(Order item 17)	
9	5151910	1	1	WASHER, pump outlet check valve	
10	048604	1	1	VALVE ASSEMBLY, check,pump outlet (Consists of items 11 thru 16)	
11	048607	1	1	BODY, outlet check valve	
12	048603	1	1	SPRING, outlet check valve	
13	048608	1	1	PLUNGER, outlet check valve	
14	048606	1	1	DISC, outlet check valve	
15	5151910	1	1	WASHER, outlet check valve	
16	048605	1	1	PLUG, seat, outlet check valve	
17	066782	1	1	PUMP ASSEMBLY (See page 93 for repair parts)(Started May 1949)	
18	068815	1	1	TUBE ASSEMBLY, pump to fuel tank (32" long. Includes 2 NUTS 910136)	
	910136	2	2	NUT, flared, long, 1/4" tube	
	913475	1	1	ELBOW, female, flared, 1/4" tube, 1/8"NPT (Used prior to May 1949)	
	910161	2	2	ELBOW, male, flared, 1/4" tube, 1/8"NPT	Started May 1949
	901825	1	1	*BUSHING, pipe reducing, 1/4"NPT to 1/8"NPT	
	901703	1	1	*TEE, pipe, 1/4"NPT	Graders prior to #3314
	914379	1	1	*CONNECTOR, male, flared, 1/4" tube, 1/4"NPT	
	912324	1	1	*CONNECTOR, male, flared, 3/8" tube, 1/4"NPT	
	913498	1	1	*ELBOW, pipe, side outlet, 1/4"NPT (Graders #3314 and up)	
				*Not required when LUBERFINER FUEL FILTER is installed.	
19	051191	1	1	TUBE ASSEMBLY, pump to air heater (71" long. Includes 2 NUTS 913676)	
	913676	2	2	NUT, flared, long, 3/16" tube	
	910268	1	1	ELBOW, male, flared, 3/16" tube, 1/8"NPT (Started May 1949)	
20	031337	1	1	SWITCH, push-button	
21	051006	1	1	CABLE, air heater switch to horn switch (4-1/2" long)	
22	066699	1	1	CABLE, air heater to switch - rear section (29-1/2" long)(This cable is an integral part of the main wiring harness on early units)	
23	066697	1	1	CABLE, air heater to switch - front section (120" long)(This cable is an integral part of the main wiring harness on early units)	
24	U-479	1	1	CLIP, pump discharge tube((3/16" diam., 13/32" bolt-hole)	
	AM-8763	1	1	CLIP, pump discharge tube (3/16" diam., 9/32" bolt hole)	
	605822	2	2	CLIP, pump discharge tube and cable (3/16" diam., 15/32" bolt hole)	
	912186	1	1	CAPSCREW, 7/16"NC x 3/4"	
	904207	1	1	LOCKWASHER, 7/16"	
25	------	-	-	COCK, fuel shut-off (See FUEL TANK AND LINES)	
26	------	-	-	MAIN FUEL LINE (See FUEL TANK AND LINES)	
27	------	-	-	BLOCK, junction (See LIGHTS, HORN AND WIRING)	

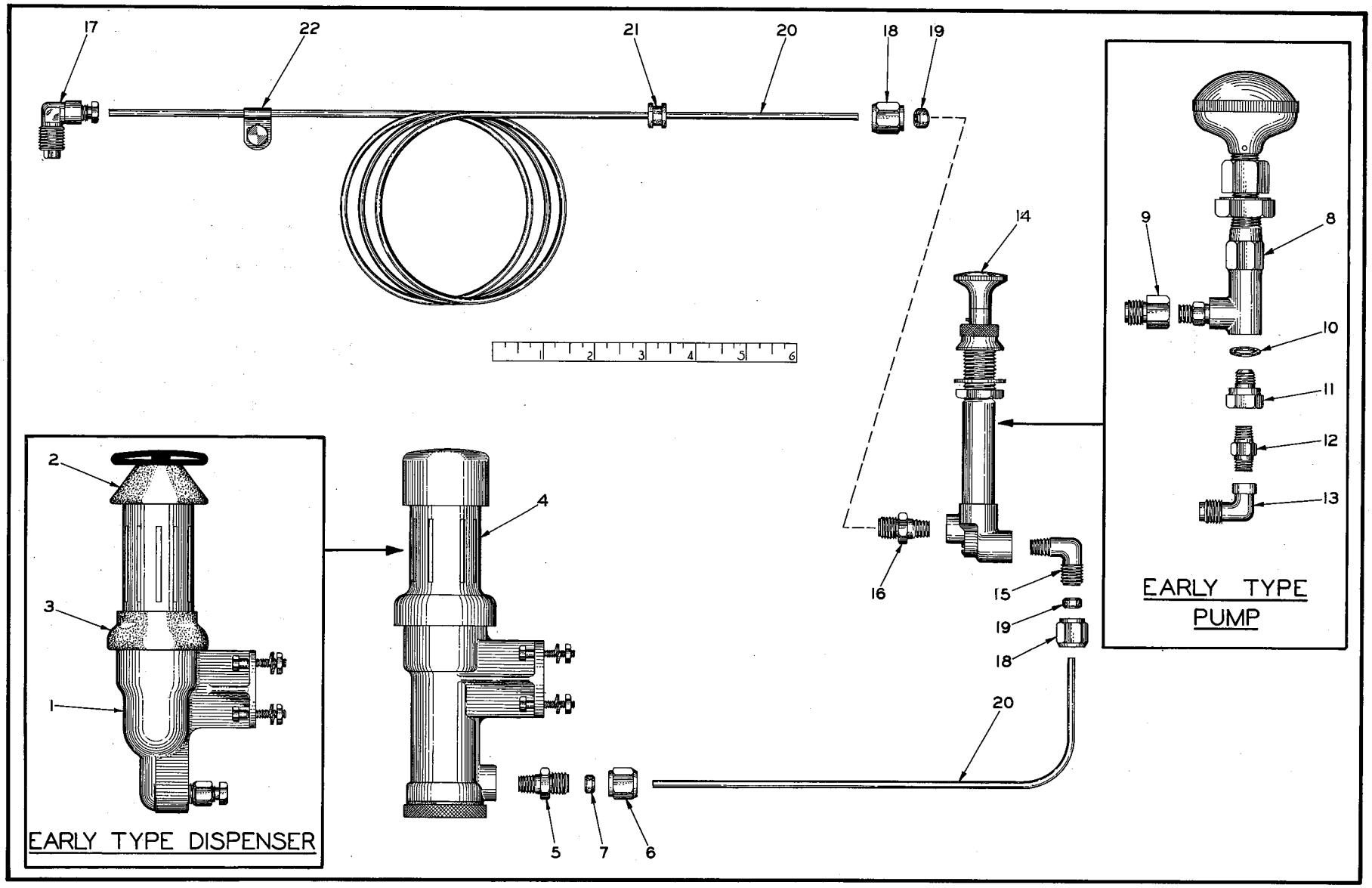

PLATE 2002—ENGINE PRIMER

ENGINE PRIMER
(See Plate 2002)

USAGE: Graders serial No. 2768 and up, except on units ordered with Air Heater as a substitute.

ITEM	PART NUMBER	QUANTITY AD3	QUANTITY AD4	DESCRIPTION	KIT NUMBER
				NOTE: Items 1 thru 3 comprise the EARLY TYPE DISPENSER as used on graders prior to serial No. 3330.	
1	066242	1	1	DISPENSER ASSEMBLY (See page 94 for repair parts)(Order item 4)	
	901217	4	4	SCREW, machine, hex-hd., #10-24NC x 5/8"	
	901310	4	4	NUT, #10-24NC	
	904203	4	4	LOCKWASHER, #10	
2	068496	1	1	BOOT, dispenser - upper	
3	068495	1	1	BOOT, dispenser - lower	
				NOTE: Items 4 thru 7 comprise the LATE TYPE DISPENSER ARRANGEMENT as used on graders serial No. 3330 and up.	
4	068880	1	1	DISPENSER ASSEMBLY (See page 95 for repair parts)	066122
	913464	4	4	SCREW, machine, hex-hd., #10-24NC x 7/8"	
	901310	4	4	NUT, #10-24NC	
	904203	4	4	LOCKWASHER, #10	
5	915556	1	1	CONNECTOR, Sealastic, male, 1/8"NPT, 1/8" tube	066122
6	915488	1	1	NUT, Sealastic fitting, 1/8" tube	066122
7	915486	1	1	RING ASSEMBLY, Sealastic fitting, 1/8" tube (Includes FERRULE)	066122
				NOTE: Items 8 thru 13 comprise the EARLY TYPE PUMP ARRANGEMENT as used on graders prior to serial No. 3186.	
8	048661	1	1	PUMP ASSEMBLY (See page 92 for repair parts)(Order item 14)	
9	915490	1	1	CONNECTOR, Sealastic, female, 1/8"NPT, 1/8" tube	066122
10	5151910	1	1	WASHER, check valve adapter	066122
11	066516	1	1	ADAPTER, outlet check valve	066122
12	5153358	1	1	VALVE ASSEMBLY, outlet check (Serviced only as a unit) . . .	066122
13	915492	1	1	ELBOW, Sealastic, female, 1/8"NPT, 1/8" tube	066122
				NOTE: Items 14 thru 16 comprise the LATE TYPE PUMP ARRANGEMENT as used on graders serial No. 3186 and up.	
14	066782	1	1	PUMP ASSEMBLY (See page 93 for repair parts)	
15	915557	1	1	ELBOW, Sealastic, male, 1/8"NPT, 1/8" tube	
16	915556	1	1	CONNECTOR, Sealastic, male, 1/8"NPT, 1/8" tube	066122
17	066517	1	1	ELBOW ASSEMBLY, fuel spray (Includes check VALVE, NUT and SLEEVE. Serviced only as a unit).	066122
18	915488	2	2	NUT, Sealastic fitting, 1/8" tube	066122
19	915486	2	2	RING ASSEMBLY, Sealastic fitting, 1/8" tube (Includes FERRULE)	066122
20	066253	1	1	TUBING, copper, 1/8"O. D., 10 ft. roll (Use as req'd).	066122
21	065946	1	1	GROMMET, tube protecting (rubber)	066122
22	065868	2	2	CLIP, tube supporting (single, closed type, 1/8" diam., 9/32" bolt hole).	066122
	905655	2	2	CAPSCREW, 1/4"NC x 1/2"	
	911024	2	2	NUT, 1/4"NC	
	904204	2	2	LOCKWASHER, 1/4"	

NOTE: The Primer arrangement shown above may also be installed on units already in the field. PRIMER KIT 066122 has been made available for this purpose. This kit includes all items shown above with the exception of the pump which is identical to the pump used with the Air Heater arrangement. Care should be taken that the Air Heater is rendered inoperative before putting the primer system in use. Using the two systems simultaneously may result in serious engine damage.

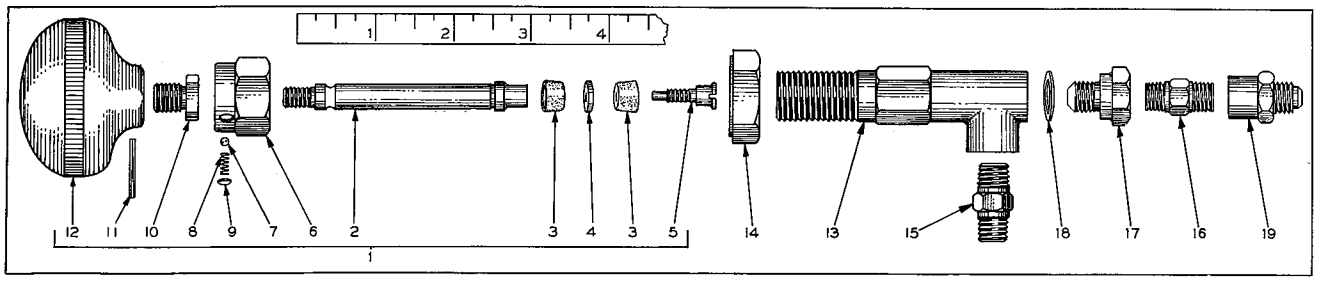

PLATE 1307A——PRIMER PUMP PARTS

PRIMER PUMP PARTS
(See Plate 1307A)

5151922 PUMP ASSEMBLY (Early Tractors. See page 87)
048661 PUMP ASSEMBLY (Late Tractors. See pages 89 and 91)

ITEM	PART NUMBER	QUANTITY 5151922	QUANTITY 048661	DESCRIPTION	KIT NUMBER
1	5152909	1	1	PLUNGER ASSEMBLY (Consists of items 2 thru 12)	
2	-------	1	1	PLUNGER (Discontinued. Order item 1)	
3	5151907	2	2	PISTON, plunger (leather)	
4	5151909	1	1	SEPARATOR, plunger piston	
5	5151908	1	1	SCREW, plunger piston retaining	
6	-------	1	1	NUT, plunger (Not serviced. Order item 1)	
7	-------	1	-	PIN, plunger locking (shoulder type)(Discontinued. Order item 1)	
	-------	1	-	PIN, plunger locking (straight type)(Discontinued. Order item 1)	
	-------	2	2	BALL, plunger locking (steel)(Replaced PIN. Not serviced. Order item 1)	
8	-------	2	2	SPRING, plunger locking (1 only used in old pumps. Order item 1)	
9	-------	2	2	PLUG, expansion, plunger nut (3/16" diam.)(1 used in old pumps. Order item 1)	
10	-------	1	1	ADAPTER, knob (Not serviced. Order item 1)	
11	913206	1	1	PIN, groove, 1/16" x 3/4"	
12	5152674	1	1	KNOB	
13	5151920	1	1	BODY	
14	911049	1	1	NUT, hex, jam, 5/8"NF	
15	5153357	1	1	VALVE ASSEMBLY, inlet check (Serviced only as a unit)	
16	5153358	1	-	VALVE ASSEMBLY, outlet check (Serviced only as a unit)	
17	066516	1	-	ADAPTER, outlet check valve	
18	5151910	1	-	WASHER, outlet check valve to pump body	
19	913037	1	-	CONNECTOR, female, flared, 3/16" tube, 1/8"NPT	

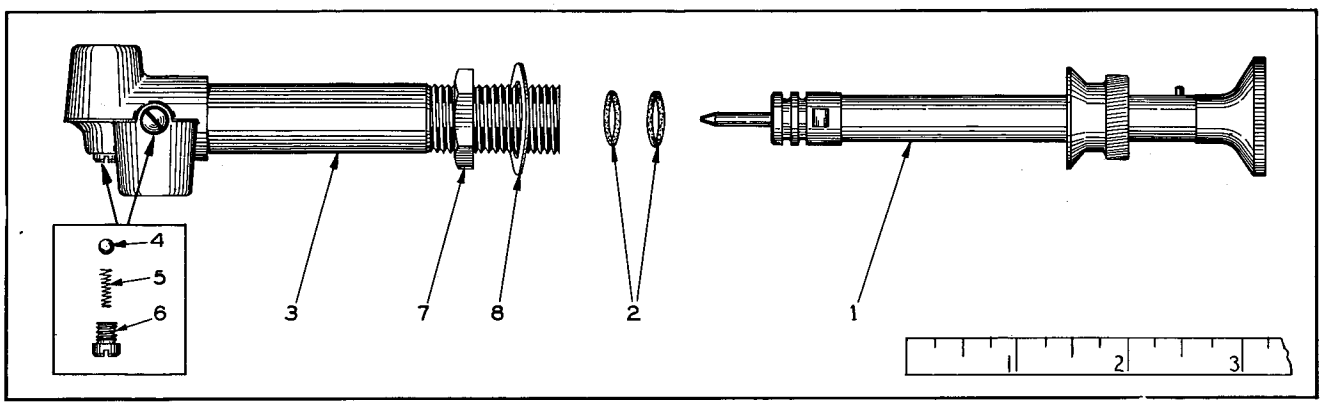

PLATE 1954A——PUMP ASSEMBLY 066782

PUMP ASSEMBLY 066782
(See Plate 1954A)

USAGE: See pages 89 and 91 for listing of complete Pump Assembly.

ITEM	PART NUMBER	QTY.	DESCRIPTION	KIT NUMBER
1	066877	1	PISTON ASSEMBLY (Serviced only as a unit)	
2	066878	2	RING, plunger packing (rubber)	
3	------	1	BARREL ASSEMBLY (Not serviced. Order complete PUMP ASSEMBLY 066782)	
4	066876	2	BALL, check valve (5/32" diam.)	
5	066875	2	SPRING, check valve	
6	066874	2	RETAINER, check valve	
7	066872	1	NUT, mounting	
8	066873	1	WASHER, mounting	

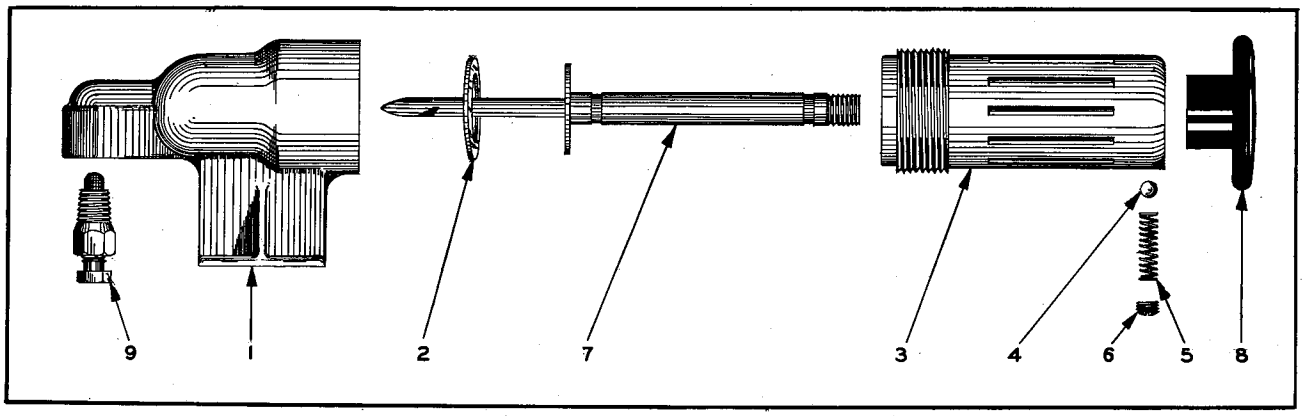

PLATE 2003——DISPENSER ASSEMBLY 066242

DISPENSER ASSEMBLY 066242
(See Plate 2003)

USAGE: See page 91 for listing of complete Dispenser Assembly.

ITEM	PART NUMBER	QTY.	DESCRIPTION	KIT NUMBER
1	066248	1	BODY, fuel dispenser	
2	066249	1	GASKET, fuel dispenser chamber	
3	066250	1	CHAMBER, fuel dispenser	
4	905357	1	BALL, steel, 3/16" diam.	
5	066251	1	SPRING, plunger locking ball	
6	066252	1	PLUG, retaining, locking ball spring	
7	066255	1	PLUNGER, fuel dispenser	
8	066254	1	KNOB, fuel dispenser plunger	
9	066256	1	CONNECTOR ASSEMBLY (Includes SCREEN, NUT and SLEEVE. Serviced only as a unit)	

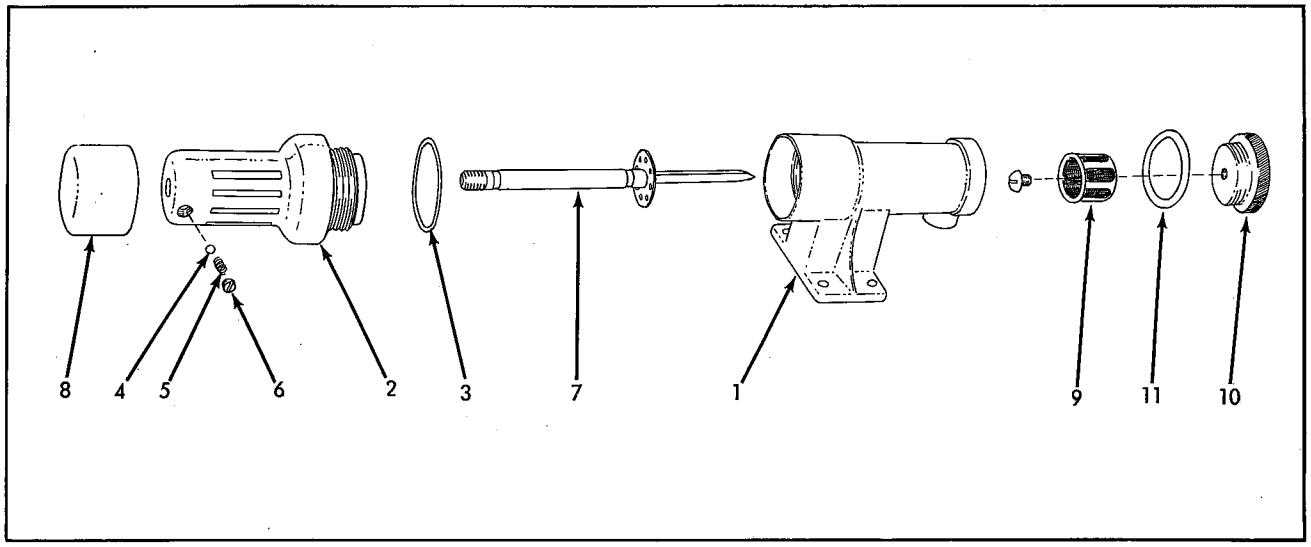

DISPENSER ASSEMBLY 068880

USAGE: See page 91 for listing of complete Dispenser Assembly.

ITEM	PART NUMBER	QTY.	DESCRIPTION	KIT NUMBER
1	068878	1	BODY, fuel dispenser	
2	068879	1	CHAMBER, fuel dispenser	
3	069164	1	GASKET, fuel dispenser chamber	
4	905357	1	BALL, steel, 3/16" diam.	
5	066251	1	SPRING, plunger locking ball	
6	066252	1	PLUG, retaining, locking ball spring	
7	066255	1	PLUNGER, fuel dispenser	
8	068881	1	KNOB, fuel dispenser plunger	
9	068875	1	STRAINER, fuel dispenser	
	915432	1	SCREW, machine, rd-hd., 1/4"NC x 5/16"	
10	068877	1	PLUG, fuel dispenser strainer	
11	068876	1	GASKET, fuel dispenser strainer plug	

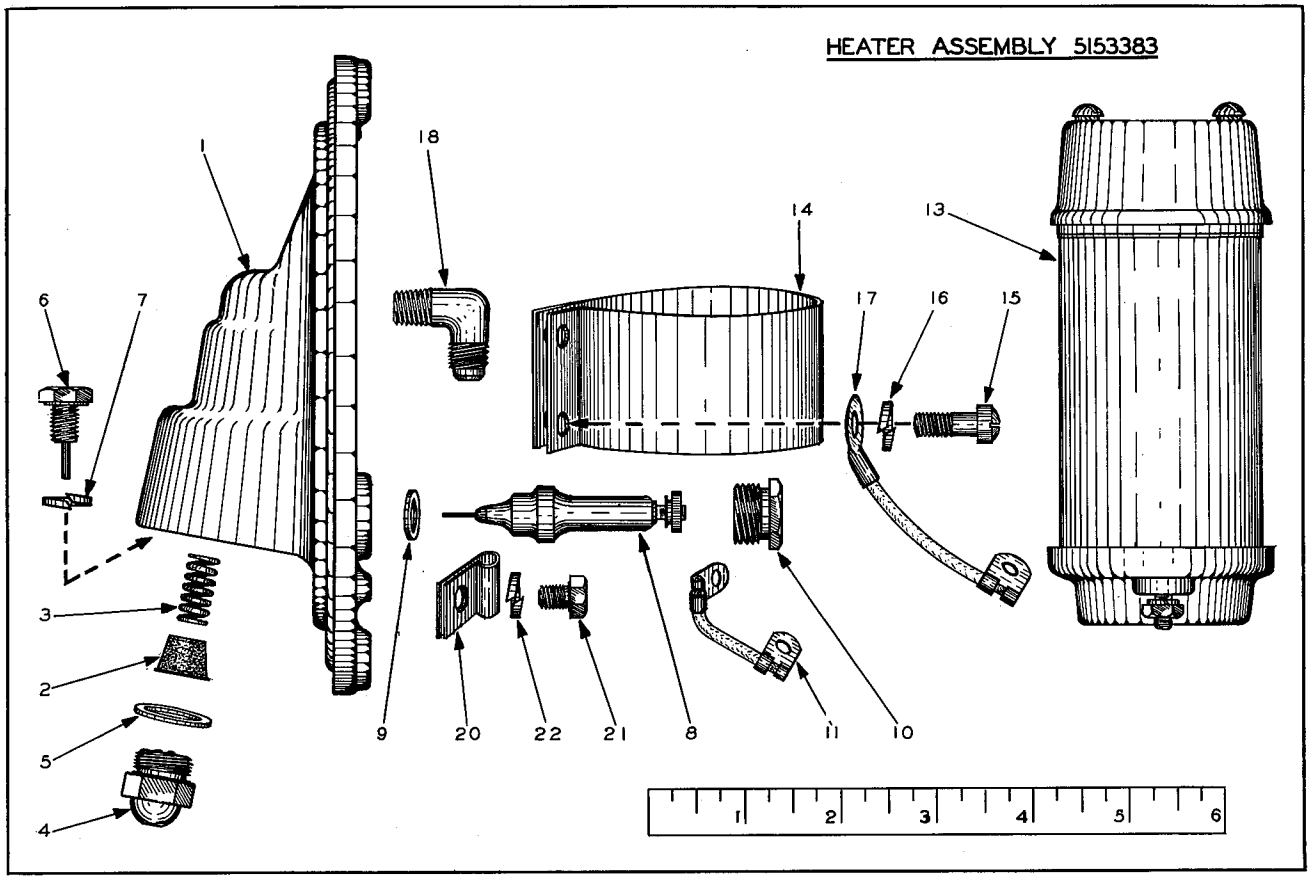

PLATE 1327B— AIR HEATER PARTS

AIR HEATER PARTS

5153383 HEATER ASSEMBLY (See pages 87 and 89)

ITEM	PART NUMBER	QTY.	DESCRIPTION	KIT NUMBER
1	5153385	1	BODY	
2	5153388	1	FILTER	
3	5153389	1	SPRING, filter	
4	5076204	1	NOZZLE, spray	
5	5151921	1	WASHER, spray nozzle	
6	5153390	1	SCREW ASSEMBLY, electrode (1 SCREW, 1 ELECTRODE)	
7	904204	1	LOCKWASHER, 1/4"	
8	1556410	1	INSULATOR PACKAGE (Includes item 9)	
9	5158594	1	GASKET, insulator	
10	5153395	1	NUT, insulator retaining	
11	5154125	1	LEAD, coil to insulator (high tension)	
13	1115485	1	COIL, ignition (Serviced only as a unit)	
14	1879753	1	BRACKET, ignition coil mounting	
15	912226	2	SCREW, machine, fil-hd., 1/4"NC x 5/8"	
16	904204	2	LOCKWASHER, 1/4"	
17	5152779	1	LEAD, ignition coil ground	
18	910268	1	ELBOW, male, flared, 3/16" tube, 1/8"NPT	
20	AM-8763	1	CLIP, fuel tube (single, closed type, 3/16" diam., 9/32" bolt hole)	
21	913032	1	CAPSCREW, 1/4"NC x 5/16"	
22	904204	1	LOCKWASHER, 1/4"	

COOLING SYSTEM

PAGE NUMBER

Fan 103

Fan Belt 103

Radiator 99

Radiator Curtain 269

Radiator Grille 203, 205

Radiator Shell 203, 205

Thermostat 99

Transfer (fan lubrication) 142

Water By-pass Tube 104

Water Manifold 99

Water Pump 101

Water Temperature Gauge 221, 223

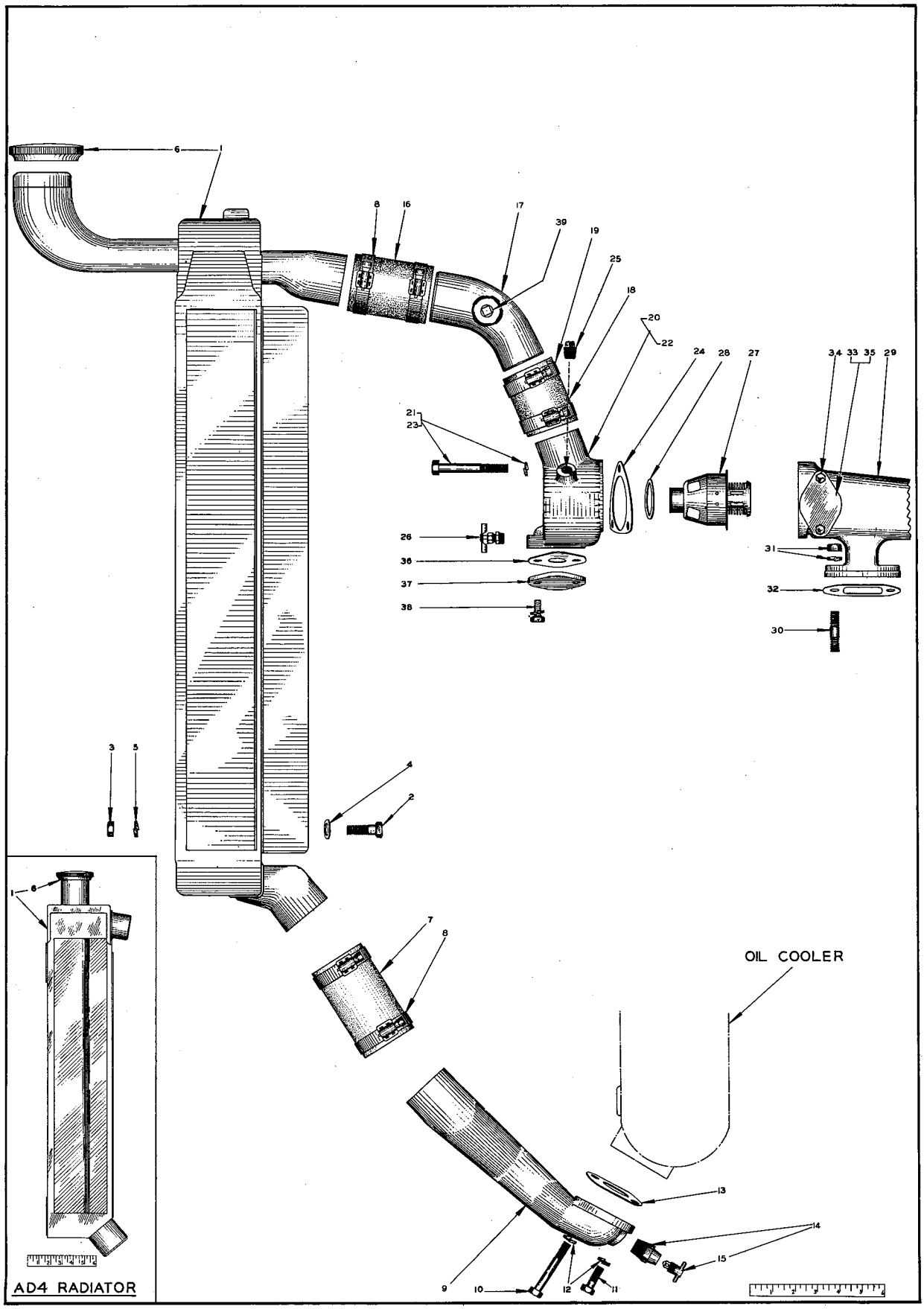

PLATE 1352B — RADIATOR AND WATER MANIFOLD

RADIATOR AND WATER MANIFOLD
(See Plate 1352B)

ITEM	PART NUMBER	QUANTITY AD3	QUANTITY AD4	DESCRIPTION	KIT NUMBER
1	604525	1	-	RADIATOR ASSEMBLY, engine cooling (Includes item 6)	
	061283	-	1	RADIATOR ASSEMBLY, engine cooling (Includes item 6)	
2	903775	8	-	CAPSCREW, 3/8"NC x 7/8" (Graders prior to #328)	
	903631	8	8	CAPSCREW, 3/8"NC x 1-1/4" (Graders after #327)	
3	911026	8	8	NUT, 3/8"NC (Graders after serial #327)	
4	911115	8	8	WASHER, plain, SAE std., 3/8" (Graders after serial #327)	
5	904206	8	8	LOCKWASHER, 3/8"	
6	074263	1	1	CAP, radiator (Includes GASKET which is not serviced separately)	
7	605396	1	1	HOSE, radiator outlet (2-1/4"I. D. x 4-1/2" long)	
8	051819	4	4	CLAMP, hose, adjustable, 1-7/8" to 2-3/4" diam.	
9	604221	1	1	CONNECTION, oil cooler water	
10	905666	1	1	CAPSCREW, 5/16"NC x 2-1/2"	
11	903772	1	1	CAPSCREW, 5/16"NC x 1"	
12	904205	2	2	LOCKWASHER, 5/16"	
13	040149	1	1	GASKET, oil cooler water connection	058034, 37
14	U-1671	1	1	COCK, drain, 3/8"NPT (Includes item 15)	
15	209359	1	1	HANDLE, drain cock	
16	040144	1	1	HOSE, inlet elbow to radiator (2-1/4" I. D. x 3-1/2" long)	
17	040145	1	1	ELBOW, radiator inlet	
18	041641	1	1	HOSE, thermostat housing to elbow (2"I. D. x 2-3/4" long)	
19	051819	2	2	CLAMP, hose, adjustable, 1-7/8" to 2-3/4" diam.	
20	3224176	1	-	HOUSING, thermostat (Graders prior to serial #295)	
21	905665	2	-	CAPSCREW, 5/16"NC x 2-1/4"	
	913025	1	-	CAPSCREW, 5/16"NC x 3-1/4"	
	904205	3	-	LOCKWASHER, 5/16"	
22	5157160	1	1	HOUSING, thermostat (Graders after serial #294)	
23	913025	3	3	CAPSCREW, 5/16"NC x 3-1/4"	
	904205	3	3	LOCKWASHER, 5/16"	
24	3222489	1	1	GASKET, thermostat housing	058034, 37
25	901652	1	1	PLUG, pipe, square head, 1/4"NPT (Discontinued)	
26	223255	1	1	VALVE ASSEMBLY, thermostat housing drain (Engines after #371-6926)(Serviced only as a unit)	
27	040276	1	-	THERMOSTAT, water outlet manifold (Graders prior to serial #295)(Not illustrated)	
	044873	1	1	THERMOSTAT, water outlet manifold (Used on graders after serial #294)	
28	044872	1	1	GASKET, thermostat	058034, 37
29	3222767	1	-	MANIFOLD, water	
	3223668	-	1	MANIFOLD, water	
30	5150362	6	8	STUD (3/8"NC x 3/8"NF x 1-11/16")	
31	911041	6	8	NUT, 3/8"NF	
	904206	6	8	LOCKWASHER, 3/8"	
32	5150361	3	4	GASKET, water manifold.	058034, 35, 36 058037, 38, 39
33	3222484	1	1	COVER, water manifold (Engines prior to #371-29836 and #471-28611 only)	
34	045312	2	2	CAPSCREW, 5/16"NC x 3/4"	
	904205	2	2	LOCKWASHER, 5/16"	
35	3222555	1	1	GASKET, manifold cover (Engines prior to #371-29836 and #471-28611 only)	058034, 37
36	5155815	1	1	COVER, thermostat housing (Engines after #371-29835 and #471-28610 only)	
37	045312	2	2	CAPSCREW, 5/16"NC x 3/4"	
	904205	2	2	LOCKWASHER, 5/16"	
38	5155816	1	1	GASKET, housing cover (Engines after #371-29835 and #471-28610 only)	058034, 37
39	901652	1	1	PLUG, pipe, 1/8"NPT	

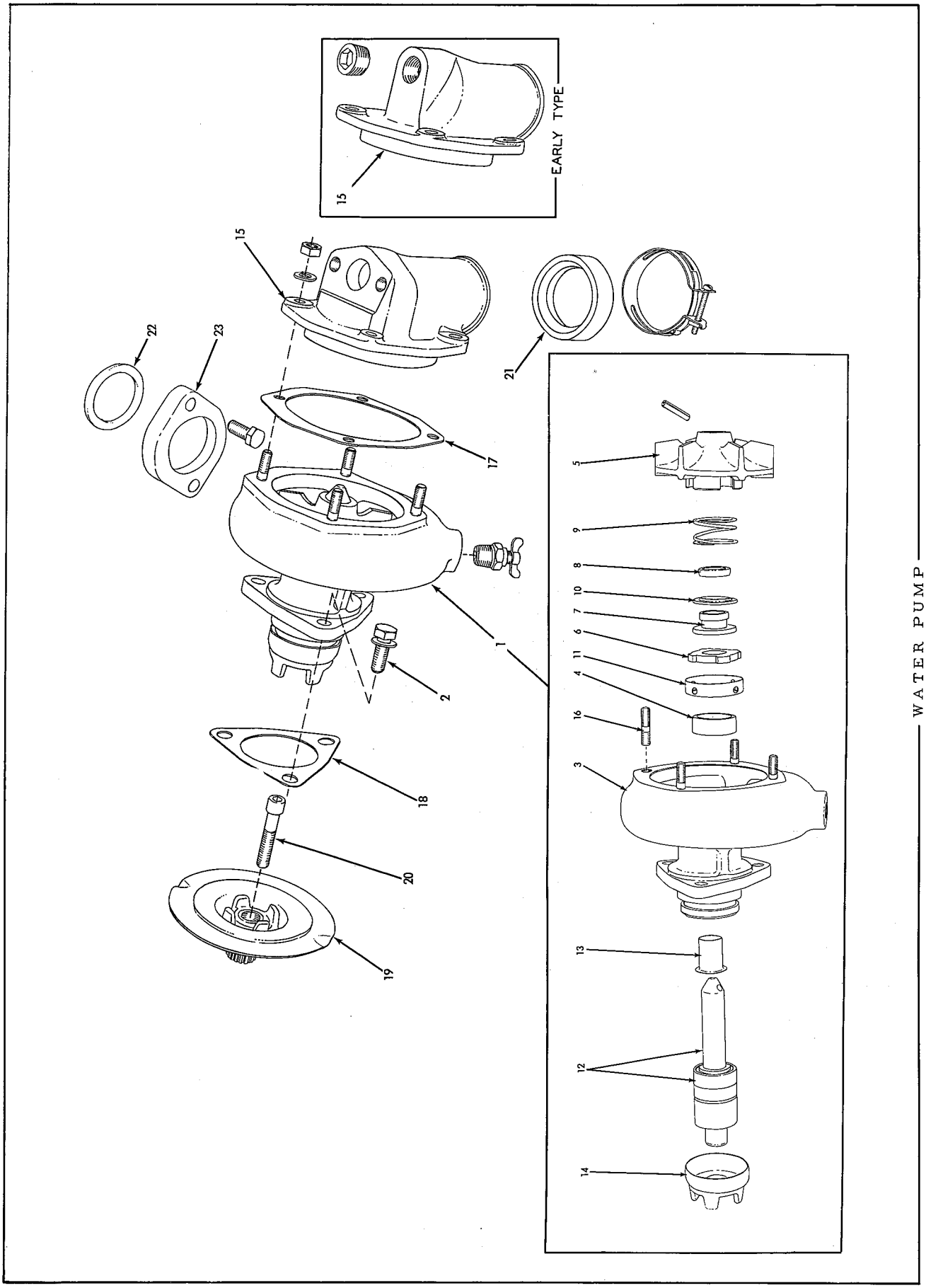

WATER PUMP

WATER PUMP

ITEM	PART NUMBER	QUANTITY AD3	QUANTITY AD4	DESCRIPTION	KIT NUMBER
-	5193239	1	1	SEAL KIT, water pump(Incl. 914836 of item 5 & 6 thru 11, 17, 18, 22)	
1	5159060	1	1	PUMP ASSEMBLY, water (Consists of items 3 thru 14) (Order PUMP KIT 065650)	065650
	915433	1	1	COCK, drain, T-handle, 1/4"NPT	
2	5171159	3	3	BOLT ASSEMBLY (Includes copper WASHER)	
3	5150438	1	1	BODY ASSEMBLY (Includes items 4 and 16)	
4	5178319	1	1	INSERT, pump body (Started with engines #3A-4433 and #4A-5333)	
5	5172820	1	1	IMPELLER ASSEMBLY (Includes items 6 thru 11)	
	914836	1	1	PIN, groove, 3/16" x 7/8" (Started with engine #371-24970)	
6	5153443	1	1	WASHER, sealing (carbon)	
7	040428	1	1	SEAL, impeller (neoprene)	
8	2007105	1	1	RING, impeller seal clamping	
9	040430	1	1	SPRING, impeller seal	
10	040431	1	1	GUIDE, impeller seal spring	
11	5153474	1	1	CUP, impeller seal retaining	
12	5172818	1	1	BEARING ASSEMBLY (Includes SHAFT, and SLINGER 059538)	
13	5150184	1	-	RING, slinger, pump shaft (snap-ring type) (Used on engines prior prior to #371-24971)	
	059538	1	1	SLINGER, pump shaft (Started with engine #371-24971)	
14	5153682	1	1	COUPLING, pump shaft	
15	5150187	1	1	COVER, pump body (Used on engines prior to #371-29836 and #471-28611)	
	904260	1	1	PLUG, pipe, ctsk-hd., 3/8"NPT	
				NOTE: Attaching parts are same as for COVER 5174857	
15A	5174857	1	1	COVER, pump body (Started with engines #371-29836 and #471-28611)	
16	5150182	4	4	STUD (1/4"NC x 1/4"NF x 1-1/16")	
--	911040	4	4	NUT, 1/4"NC	
--	904204	4	4	LOCKWASHER, 1/4"	
17	5150188	1	1	GASKET, body cover	058034, 37 065650
18	5150193	1	1	GASKET, pump to blower	058034, 37 065650
19	5172974	1	1	COUPLING ASSEMBLY, pump drive (Includes SETSCREW 5172976)(Used on engines prior to #3A-5085 and #4A-6269)	
	5179605	1	1	COUPLING, pump drive (Started with engines #3A-5085 and #4A-6269)	
20	913256	1	-	SETSCREW, socket-hd., 3/8"NC x 5/8" (Used on engines prior to #371-25834)	
	5172976	1	1	SETSCREW (socket-hd., taper point, 7/16"NC x 1-1/16" (Used on engines #371-25834 thru #3A-5084, and engines prior to #4A-6269)	
	069004	1	1	CAPSCREW, socket-hd., 5/16"NF x 1-1/2" (Started with engines #3A-5085 and #4A-6269)	
21	5153560	1	1	SEAL, pump to oil cooler	058034, 37 065650
	915000	1	1	CLAMP, hose, 2-1/8" diam.	
22	5150191	1	1	PACKING, pump outlet	058034, 37 065650
23	5150192	1	1	FLANGE, pump outlet packing	
	905662	2	2	CAPSCREW, 5/16"NC x 1-1/8"	

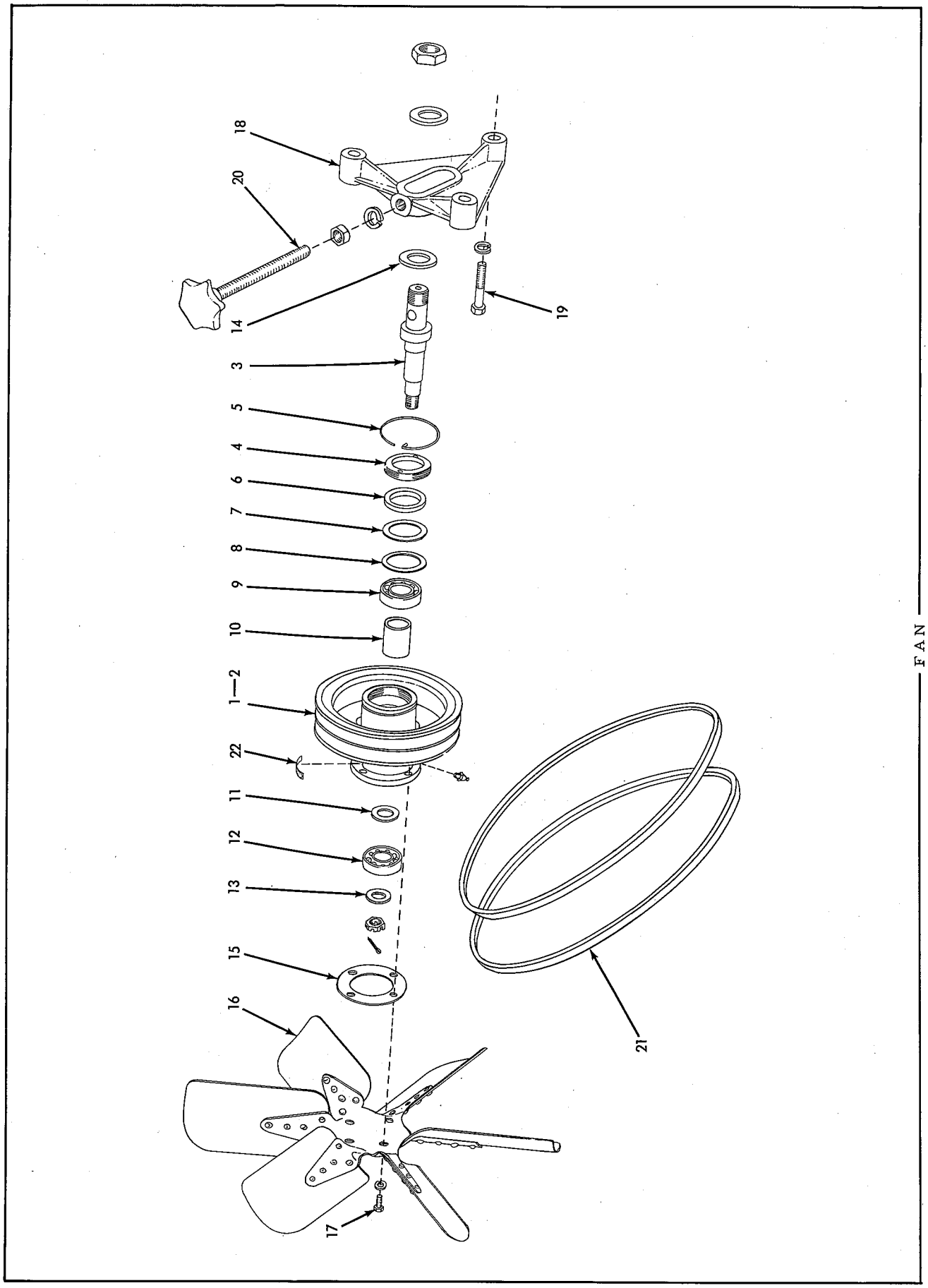

FAN

FAN

ITEM	PART NUMBER	QUANTITY AD3	QUANTITY AD4	DESCRIPTION	KIT NUMBER
1	044467	1	1	HUB ASSEMBLY (Consists of items 2 thru 15, and 17)	
2	040086	1	1	PULLEY (Standard)	
	915273	1	-	FITTING, lubricating, 30°, 1/8"NPT	
3	040087	1	1	SPINDLE	
	911051	1	1	NUT, jam, 1"NF	
	912840	1	1	NUT, slotted, 5/8"NF	
	900802	1	1	PIN, cotter, 3/32" x 1"	
4	040093	1	1	RETAINER, spindle sealing washer	
5	040094	1	1	RING, locking, sealing washer retainer	
6	040095	1	1	WASHER, sealing (cork)	058034, 37
7	040096	1	1	WASHER, spindle seal (steel)	
8	040097	1	1	GASKET, spindle washer	058034, 37
9	042986	1	1	BEARING, ball, fan spindle - rear	
10	040098	1	1	SPACER, spindle bearings	
11	040099	1	1	WASHER, spindle front bearing	
12	042979	1	1	BEARING, ball, fan spindle - front	
13	040089	1	1	WASHER, end, fan spindle	
14	040088	2	2	WASHER, spindle mounting	
15	040100	1	1	GASKET, fan	058034, 37
16	041441	1	-	FAN (2" deep)	
	054342	-	1	FAN (3" deep)	
17	045312	4	4	CAPSCREW, 5/16"NC x 3/4"	
	904205	4	4	LOCKWASHER, 5/16"	
18	040085	1	1	BRACKET, spindle mounting	
19	035712	3	3	CAPSCREW, 1/2"NC x 2-1/4"	
	904208	3	3	LOCKWASHER, 1/2"	
20	040090	1	1	SCREW ASSEMBLY, fan belt adjusting (Includes KNOB)	
	911043	1	1	NUT, 1/2"NF	
	904208	1	1	LOCKWASHER, 1/2"	
21	602944	2	2	BELT, fan	
22	------	1	1	TRANSFER, lubrication (See PAINTING AND MARKING)	

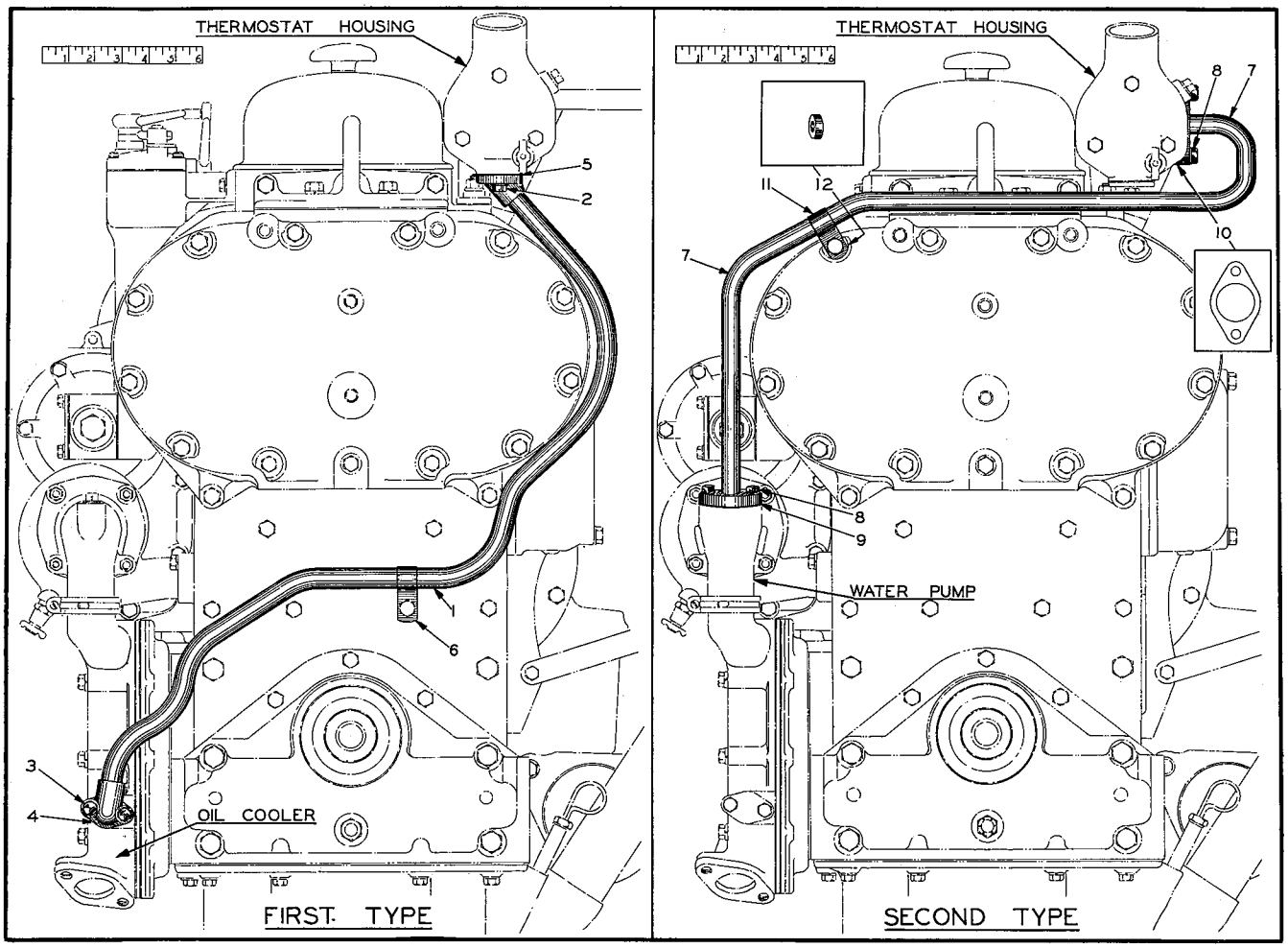

PLATE 1864——WATER BY-PASS TUBE

WATER BY-PASS TUBE
(See Plate 1864)

ITEM	PART NUMBER	QTY.	DESCRIPTION	KIT NUMBER
			FIRST TYPE - Used on engines prior to serial No. 371-29836 and 471-28611.	
1	5153238	1	TUBE, thermostat housing to oil cooler	
2	045295	2	CAPSCREW, 5/16"NC x 1"	
	904205	2	LOCKWASHER, 5/16"	
3	046321	2	CAPSCREW, 5/16"NC x 1-1/2"	
	904205	2	LOCKWASHER, 5/16"	
4	5151190	1	GASKET - lower	058034, 37
5	5155816	1	GASKET - upper	058034, 35, 36, 058037, 38, 39
6	5151189	1	CLIP, supporting	
			SECOND TYPE - Started with engines serial No. 371-29836 and 471-28611.	
7	5174818	1	TUBE, thermostst housing to water pump (AD 4 only)	
	5174820	1	TUBE, thermostat housing to water pump (AD 3 only)	
8	045295	4	CAPSCREW, 5/16"NC x 1"	
	904205	4	LOCKWASHER, 5/16"	
9	5150144	1	GASKET, tube to water pump	058034,37
10	3222555	1	GASKET, tube to thermostat housing	058034,37
11	5151189	1	CLIP, supporting	
12	5157412	1	SPACER, supporting clip (1/4" thick)	

POWER TRANSMISSION SYSTEM

	PAGE NUMBER
Engine Clutch and Housing	107, 109
Engine Clutch Parts	112, 113
Engine Clutch Pedal and Linkage	114, 115
Gear Shift	123, 127
Power Take-off	197
Power Control Box	189
Rear Axle	129
Tandems	133
Transmission	117
Transmission Brake	121

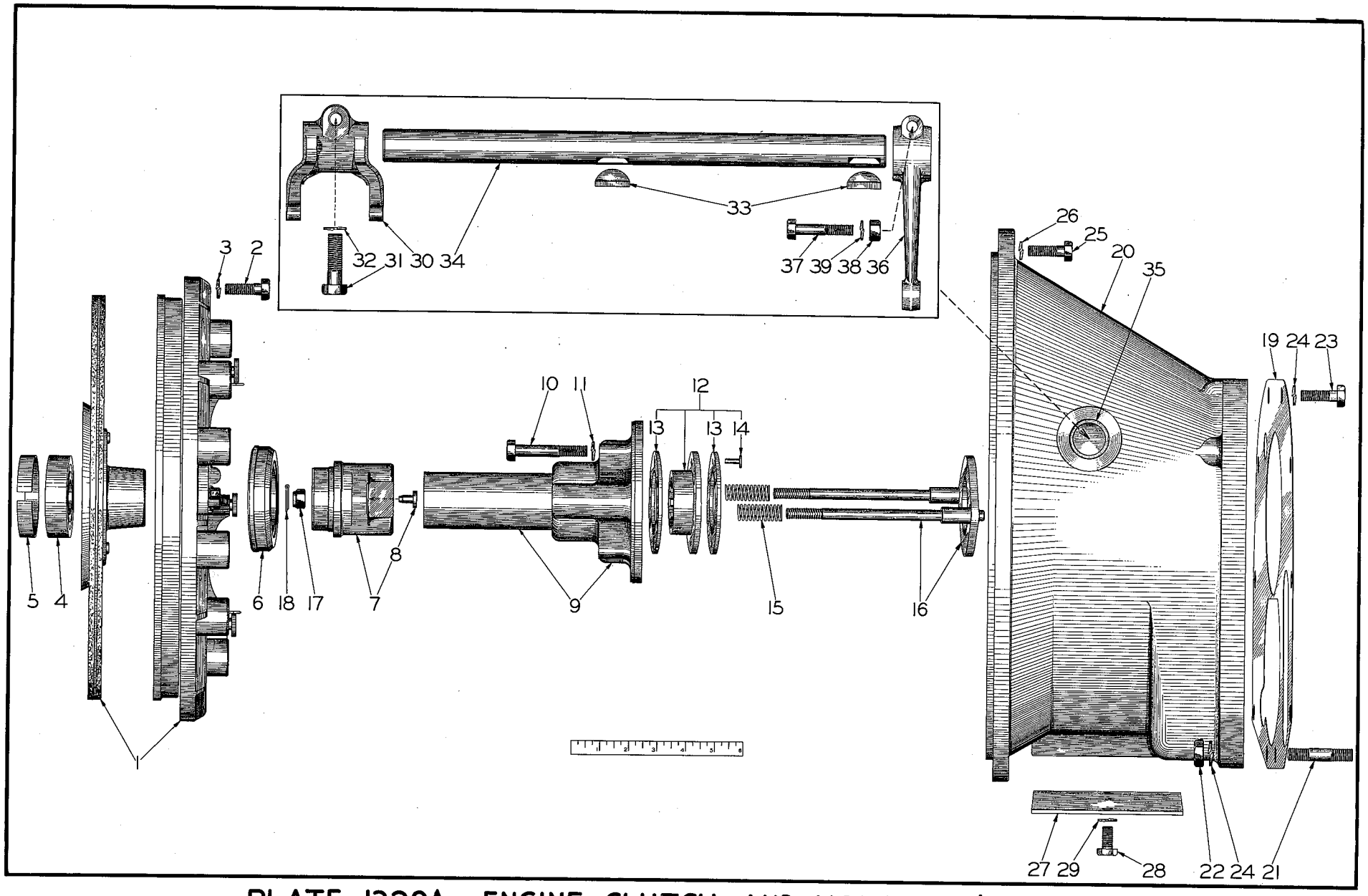

PLATE 1320A—ENGINE CLUTCH AND HOUSING (EARLY AD GRADERS)

ENGINE CLUTCH AND HOUSING
(See Plate 1320A)

USAGE: Model AD3 Graders prior to serial #328

ITEM	PART NUMBER	QTY.	DESCRIPTION	KIT NUMBER
1	207510	1	CLUTCH ASSEMBLY, engine (Order components. See page 112)	
2	013058	12	CAPSCREW, 3/8"NC x 1-1/4"	
3	904206	12	LOCKWASHER, 3/8"	
4	211013	1	BEARING, ball, engine flywheel	
5	604838	1	SPACER, flywheel bearing	
6	604924	1	BEARING, ball, clutch release	
7	604836	1	SHIFTER ASSEMBLY, clutch (Includes item 8)	
8	604837	2	PIN, wear, clutch shifter	
9	604829	1	CAGE ASSEMBLY, clutch brake (1 CAGE and 1 TUBE)	
10	605156	4	CAPSCREW, 3/8"NC x 2-1/2"	
11	904206	4	LOCKWASHER, 3/8"	
12	604831	1	HUB ASSEMBLY, clutch brake (Includes items 13 and 14)	
13	045447	2	FACING, clutch brake hub	
14	910914	6	RIVET, tubular, brass, flat head, 3/16" x 1/2"	
15	604835	2	SPRING, clutch brake	
16	604832	1	DISC, clutch brake	
17	913528	2	NUT, safety, 3/8"NF	
18	900801	2	PIN, cotter, 3/32" x 3/4"	
19	604822	1	GASKET, clutch housing to transmission case	
20	605109	1	HOUSING, clutch	
21	604821	6	STUD (1/2"NC x 2-1/4")	
22	911028	6	NUT, 1/2"NC	
23	035236	4	CAPSCREW, 1/2"NC x 1-3/4"	
24	904208	10	LOCKWASHER, 1/2"	
25	013058	12	CAPSCREW, 3/8"NC x 1-1/4"	
26	904206	12	LOCKWASHER, 3/8"	
27	604823	1	COVER, clutch housing	
28	903629	2	CAPSCREW, 3/8"NC x 3/4"	
29	904206	2	LOCKWASHER, 3/8"	
30	605108	1	FORK, clutch release	
31	035236	1	CAPSCREW, 1/2"NC x 1-3/4"	
32	904208	1	LOCKWASHER, 1/2"	
33	905129	2	KEY, #D woodruff, 5/16" x 1-1/4"	
34	604824	1	SHAFT, clutch release fork	
35	604820	2	BUSHING, clutch fork shaft (oilite)	
36	604825	1	LEVER, clutch release fork shaft	
37	013059	1	CAPSCREW, 3/8"NC x 2"	
38	911026	1	NUT, 3/8"NC	
39	904206	1	LOCKWASHER, 3/8"	

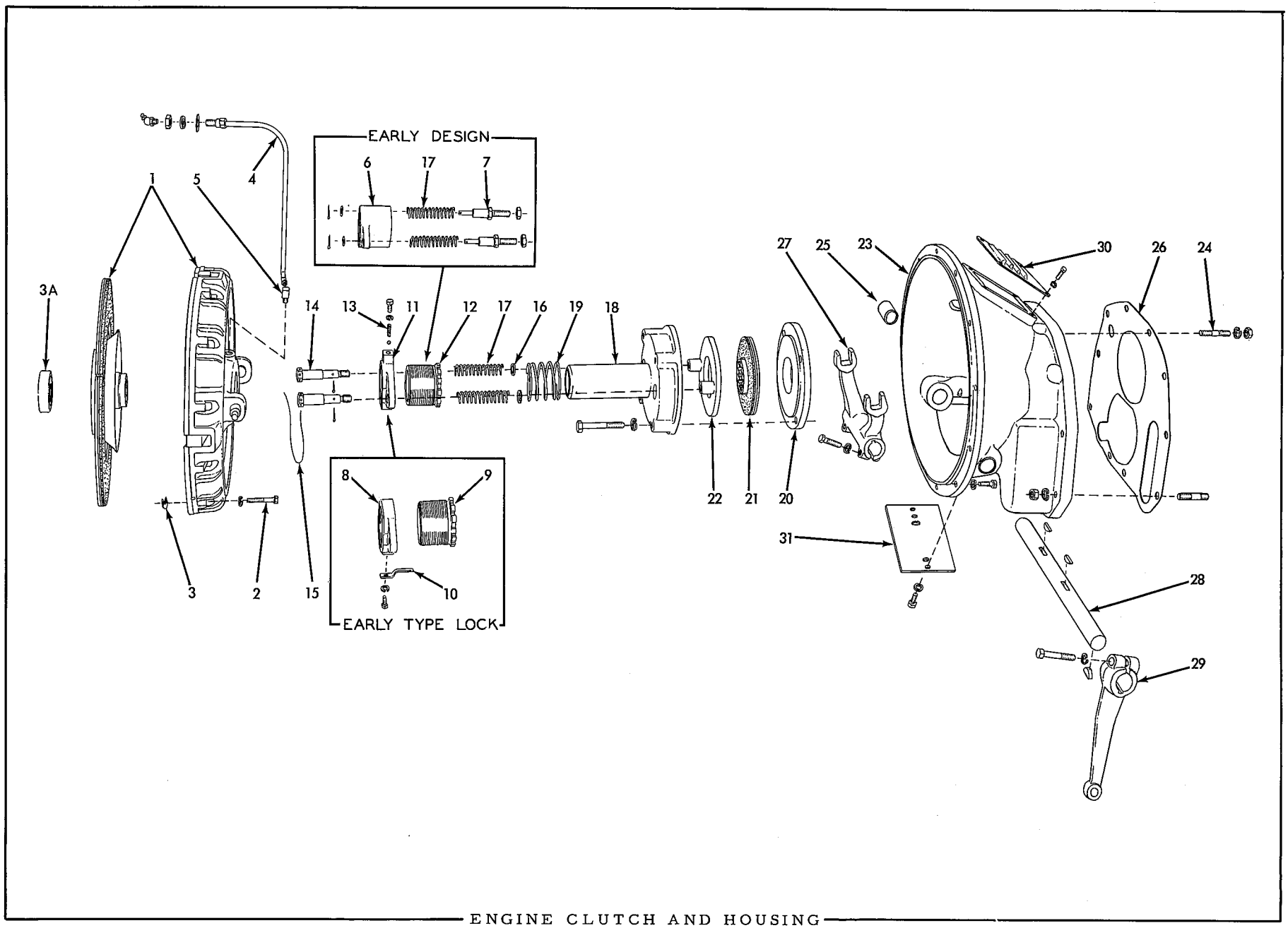

ENGINE CLUTCH AND HOUSING

ENGINE CLUTCH AND HOUSING

USAGE: Model AD4 Graders and Model AD3 Graders serial No. 328 and up.

ITEM	PART NUMBER	QUANTITY AD3	QUANTITY AD4	DESCRIPTION	KIT NUMBER
1	051260	1	1	CLUTCH ASSEMBLY, engine (See page 113 for repair parts)	
2	068320	12	12	CAPSCREW, 5/16"NC x 2"	
	904205	12	12	LOCKWASHER, 5/16"	
3	054649	6	6	SHIM, clutch (1/32" thick)(To be removed when refacing of flywheel or clutch pressure plate requires machining off an amount equal to thickness of shim)	
3A	211013	1	1	BEARING, ball, engine flywheel	
4	605782	1	1	HOSE, lubricating, clutch release bearing (8-1/2" long)(Used on graders prior to #3671)	
	911036	1	1	NUT, jam, 5/8"NC	
	914465	1	1	FITTING, lubricating, straight, 1/8"NPT	
	045496	1	1	HOSE, lubricating, clutch release bearing (19-3/4" long) (Used on graders #3671 and up)	
	911049	1	1	NUT, jam, 5/8"NF	
	911100	1	1	WASHER, plain, SAE std., 5/8"	
	904209	1	1	LOCKWASHER, 5/8"	
	915275	1	1	FITTING, lubricating, 67-1/2°, 1/8"NPT	
5	605794	1	1	ELBOW, clutch lubricating hose (90°, 1/8"NPT male and female)	
				NOTE: Items 6 and 7 comprise the EARLY TYPE CLUTCH BRAKE ADJUSTMENT as used on graders prior to #454.	
6	051204	1	-	COLLAR, clutch brake adjustment	
7	051856	2	-	STUD, clutch brake adjustment	
	911035	2	-	NUT, jam, 1/2"NC	
	911115	2	-	WASHER, plain, SAE std., 3/8"	
	900942	2	-	PIN, cotter, 3/32" x 5/8"	
				NOTE: Items 8 thru 10 were used on graders #454 thru #3515 only.	
8	057942	1	1	COLLAR, clutch brake adjustment	
9	057941	1	1	SLEEVE, clutch brake adjustment	
10	057944	1	1	LOCK, clutch brake adjustment sleeve	
	906692	1	1	CAPSCREW, 1/4"NC x 3/8"	
	904204	1	1	LOCKWASHER, 1/4"	
				NOTE: Items 11 thru 13 were used on graders #3516 and up.	
11	068975	1	1	COLLAR, clutch brake adjustment	
12	068976	1	1	SLEEVE, clutch brake adjustment	
13	600799	1	1	SPRING, adjustment collar locking ball	
	905358	1	1	BALL, steel, 1/4" diam.	
	905660	1	1	CAPSCREW, 5/16"NC x 1/2"	
	904205	1	1	LOCKWASHER, 5/16"	
14	057943	2	2	STUD, clutch brake (Used on graders #454 and up)	
	910967	2	2	PIN, cotter, 1/8" x 7/8"	
15	023756	1	1	WIRE, locking (1/16" x 26")	
16	060553	2	2	WASHER, plain, clutch brake stud (Graders #454 and up)	
17	051194	2	2	SPRING, pressure, clutch brake	
18	051202	1	1	SLEEVE, clutch throwout	
	905668	4	4	CAPSCREW, 1/2"NC x 3-1/4"	
	904208	4	4	LOCKWASHER, 1/2"	

(Continued)

ENGINE CLUTCH AND HOUSING (Cont'd)

ITEM	PART NUMBER	QUANTITY AD3	QUANTITY AD4	DESCRIPTION	KIT NUMBER
19	051192	1	1	SPRING, clutch brake retracting	
20	051201	1	1	PLATE, clutch brake	
21	068908	1	1	HUB ASSEMBLY, clutch brake (Includes FACINGS which are cemented in place and cannot be serviced separately)	
	051677	2	2	FACING, clutch brake hub (Replaceable type. Used only on graders prior to #3609)	
	910914	12	12	RIVET, tubular, brass, flat head, 3/16" x 1/2"	
22	051203	1	1	PLATE, pressure, clutch brake	
23	051259	1	1	HOUSING ASSEMBLY, clutch (Includes item 25)	
	910245	12	12	CAPSCREW, 3/8"NC x 1-3/8"	
	904206	12	12	LOCKWASHER, 3/8"	
24	604821	10	10	STUD (1/2"NC x 2-1/2")	
	904208	10	10	LOCKWASHER, 1/2"	
	911028	10	10	NUT, 1/2"NC	
25	604820	2	2	BUSHING, clutch fork shaft	
26	605799	1	1	GASKET, clutch housing to transmission case	
27	5157551	1	1	FORK, clutch shifting	
	904744	2	2	CAPSCREW, 7/16"NC x 1-1/2"	
	904207	2	2	LOCKWASHER, 7/16"	
28	605797	1	1	SHAFT, clutch shifting fork	
	905126	3	3	KEY, #15 woodruff, 1/4" x 1"	
29	605771	1	1	LEVER, shifting fork shaft	
	903633	1	1	CAPSCREW, 3/8"NC x 1-3/4"	
	904208	1	1	LOCKWASHER, 3/8"	
30	605796	1	1	COVER, ventilating, clutch housing	
	905655	4	4	CAPSCREW, 1/4"NC x 1/2"	
	904204	4	4	LOCKWASHER, 1/4"	
31	605783	1	1	COVER, clutch housing - lower	
	903629	2	2	CAPSCREW, 3/8"NC x 3/4"	
	904206	2	2	LOCKWASHER, 3/8"	

MEMO

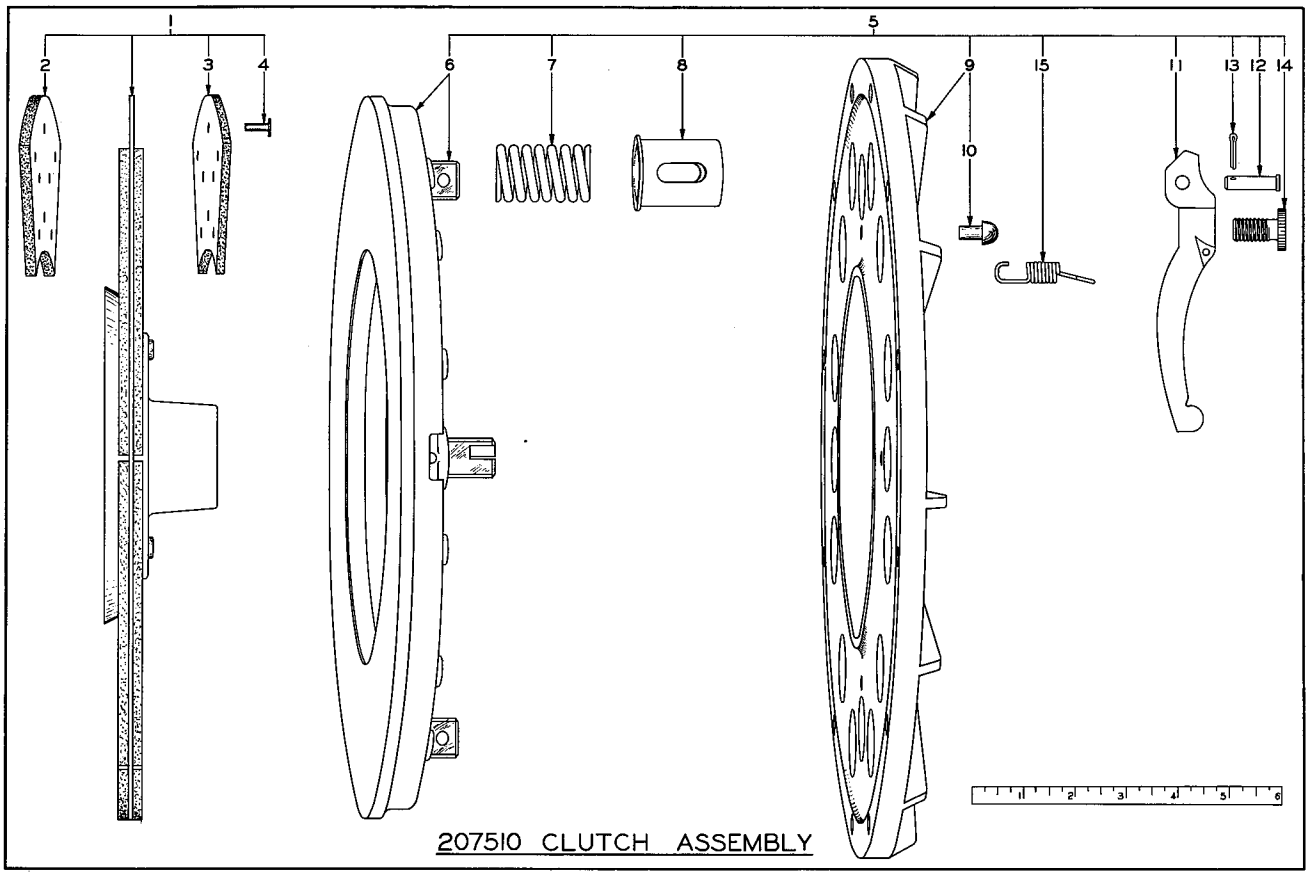

PLATE 1321 — ENGINE CLUTCH PARTS

ENGINE CLUTCH 207510
(See Plate 1321)

USAGE: Model AD3 Graders prior to serial No. 328. See page 107 for listing of complete Clutch Assembly.

ITEM	PART NUMBER	QTY.	DESCRIPTION	KIT NUMBER
1	207880	1	MEMBER ASSEMBLY, driven (Includes items 2 thru 4)	
2	207878	6	FACING, driven member (1/8" thick)	208358
3	207879	6	FACING, driven member (5/32" thick)	208358
4	912380	48	RIVET, tubular, brass, flat head, 9/64" x 7/16"	208358
5	217684	1	PLATE ASSEMBLY (Consists of items 6 thru 15)	
6	207169	1	PLATE ASSEMBLY, pressure (Includes 4 STUDS and 4 PINS)	
7	204843	12	SPRING, pressure	
8	204844	12	CUP, pressure spring	
9	207170	1	PLATE ASSEMBLY, back (Includes item 10)	
10	204891	4	SEAT, adjusting screw	
11	204892	4	LEVER, release	
12	204895	4	PIN, release lever	
13	904001	4	PIN, cotter, 3/32" x 1/2"	
14	207588	4	SCREW, adjusting	
15	204894	4	SPRING, release lever	

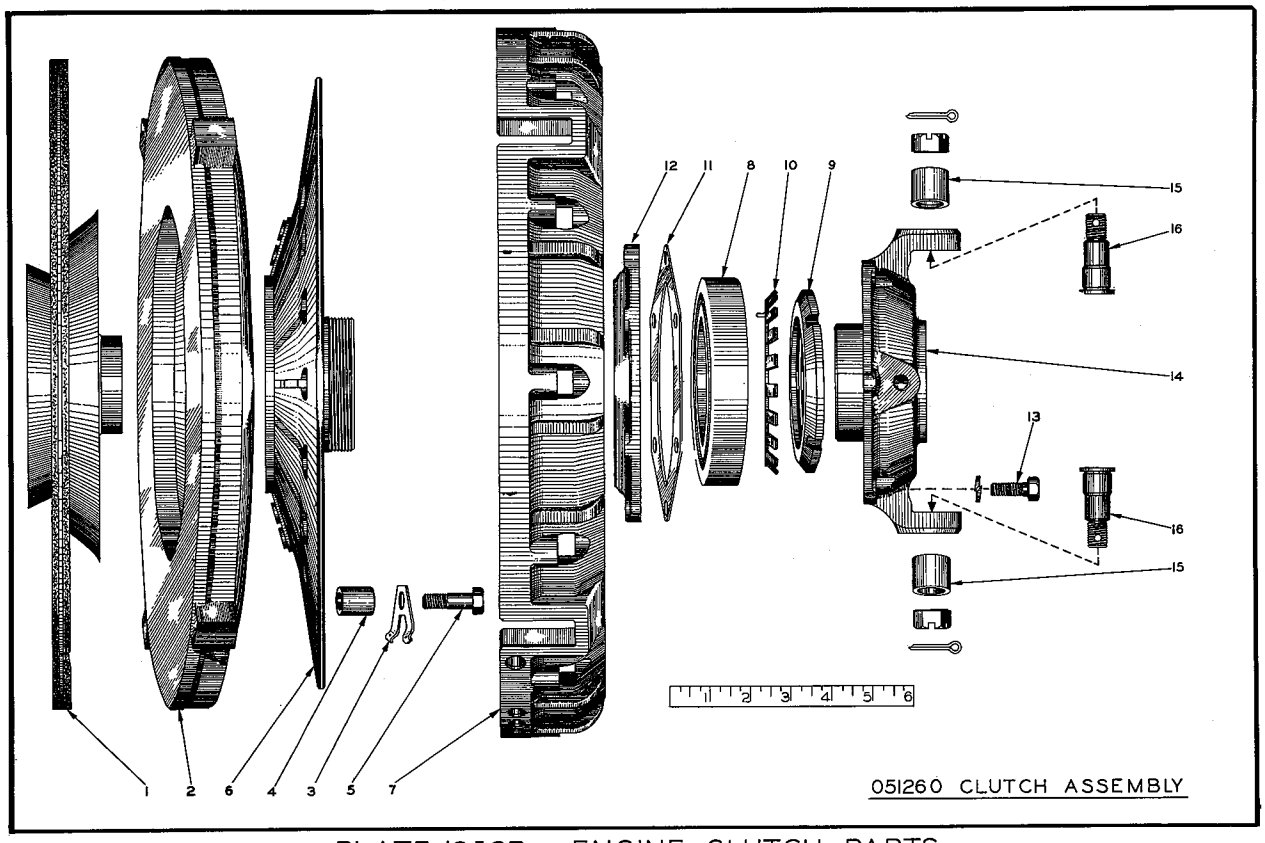

PLATE 1353B— ENGINE CLUTCH PARTS

ENGINE CLUTCH 051260
(See Plate 1353B)

USAGE: Model AD4 Graders and Model AD3 Graders serial No. 328 and up. See page 109 for listing of complete Clutch Assembly.

ITEM	PART NUMBER	QTY.	DESCRIPTION	KIT NUMBER
1	054126	1	DISC ASSEMBLY, driven (Facings are not serviced separately)	
2	054127	1	PLATE, pressure	
3	054132	3	SPRING, pressure plate retracting	
4	054131	3	SPACER	
5	056168	3	CAPSCREW, 3/8"NC x 1-1/4"	
6	054129	1	SPRING AND HUB ASSEMBLY (Serviced only as a unit)	
7	054128	1	COVER	
8	054122	1	BEARING, ball, clutch release	
9	054120	1	NUT, retaining, release bearing	
10	054121	1	WASHER, locking, release bearing nut	
11	054123	1	GASKET, release bearing cover	
12	054124	1	COVER, release bearing	
13	054130	6	CAPSCREW, 5/16"NC x 7/8"	
	904205	6	LOCKWASHER, 5/16"	
14	054125	1	SLEEVE ASSEMBLY, release bearing (Includes items 15 and 16)	
15	054118	2	BUSHING, release bearing sleeve pin	
16	054119	2	PIN, release bearing sleeve	
	910867	2	NUT, hex, slotted, 1/2"NF	
	910967	2	PIN, cotter, 1/8" x 7/8"	

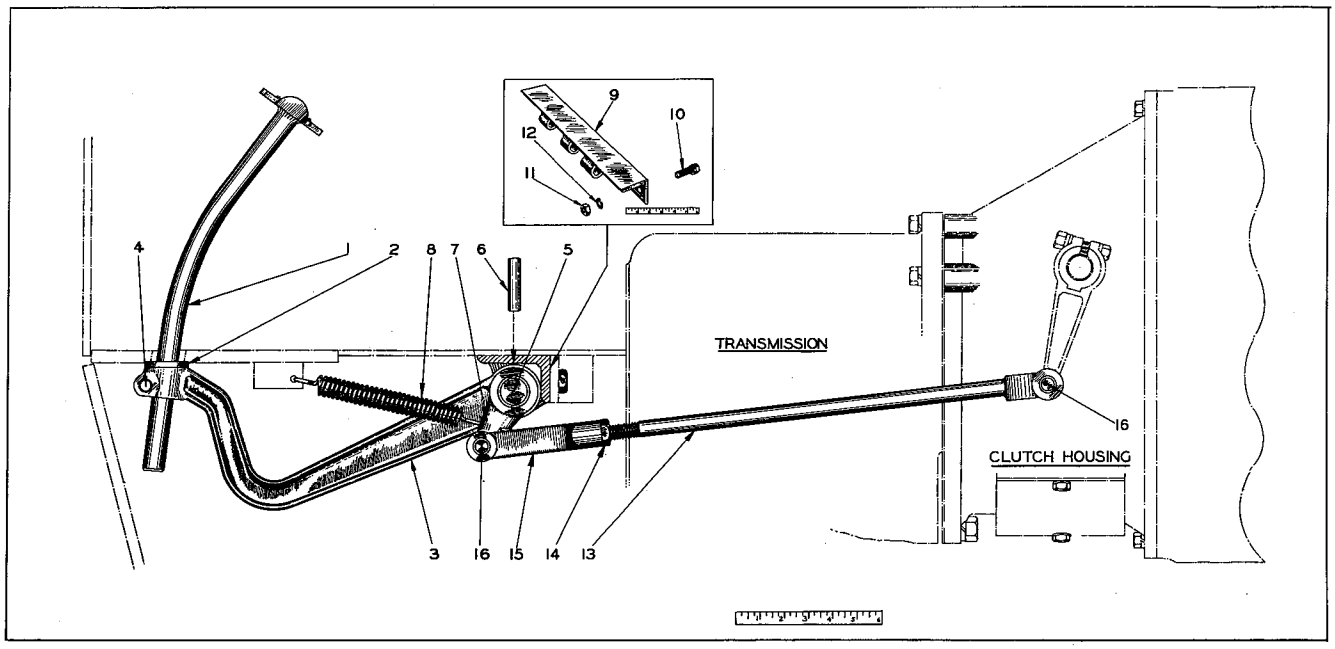

PLATE 1342A—— CLUTCH CONTROL LINKAGE (EARLY AD3 GRADERS)

ENGINE CLUTCH CONTROL

USAGE: Model AD3 Graders prior to serial No. 328.

ITEM	PART NUMBER	QTY.	DESCRIPTION	KIT NUMBER
1	604753	1	PEDAL, clutch operating	
2	604756	1	BUMPER, clutch pedal arm (rubber)	
3	604231	1	ARM, clutch pedal	
4	035190	1	CAPSCREW, 1/2"NC x 1-1/2"	
	904208	1	LOCKWASHER, 1/2"	
5	604826	1	SHAFT, pedal arm	
6	604752	2	PIN, pedal arm and lever (1/2" x 2-1/4")	
7	604749	1	LEVER, pedal arm shaft	
8	604757	1	SPRING, pedal retracting	
9	------	1	SUPPORT, clutch pedal (Not available)	
10	035190	4	CAPSCREW, 1/2"NC x 1-1/2"	
11	911028	4	NUT, 1/2"NC	
12	904208	4	LOCKWASHER, 1/2"	
13	604828	1	ROD, clutch control	
14	911049	1	NUT, jam, 5/8"NF	
15	604827	1	YOKE, control rod (5/8"NF)	
16	033075	2	PIN, control rod	
	900808	2	PIN, cotter, 1/8" x 1-1/2"	

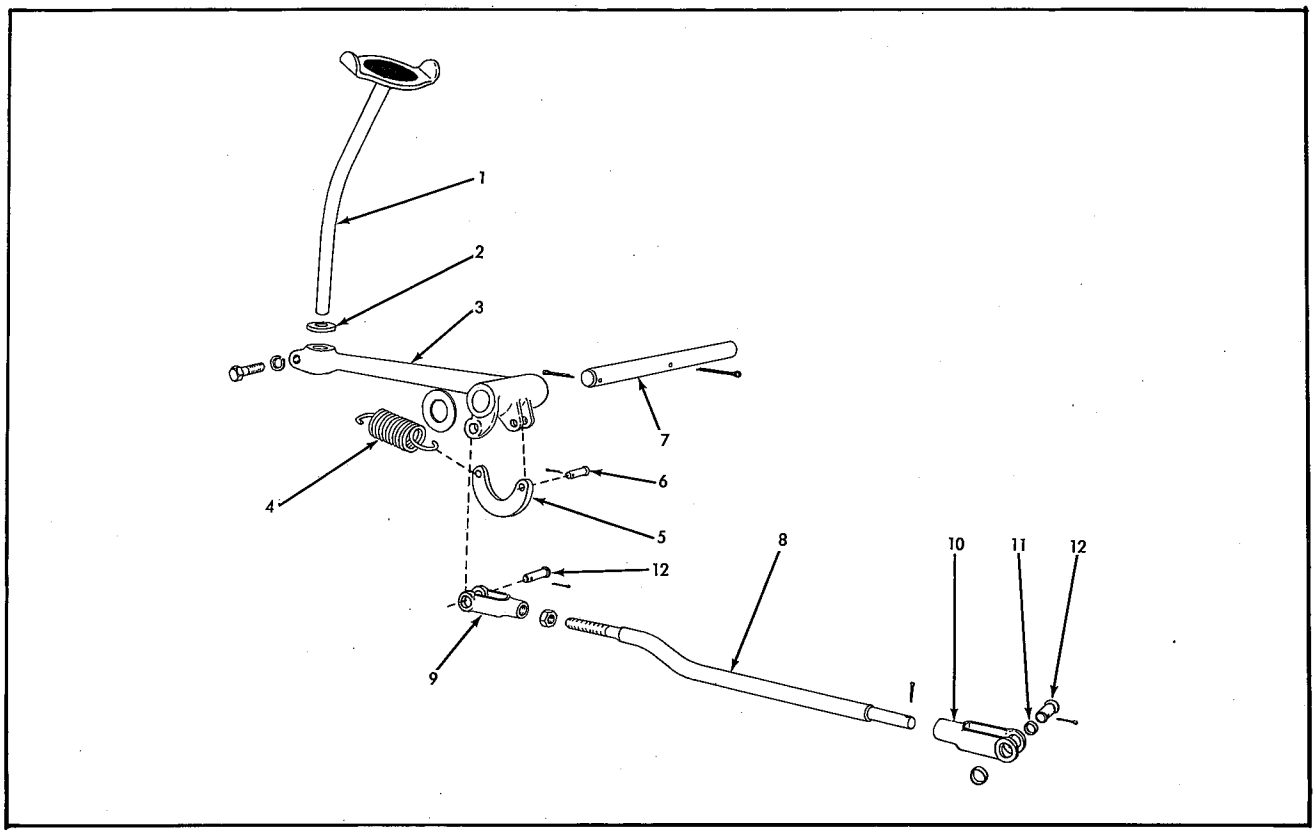

ENGINE CLUTCH CONTROL

USAGE: Model AD4 Graders, and Model AD3 Graders serial No. 328 and up.

ITEM	PART NUMBER	QUANTITY AD3	QUANTITY AD4	DESCRIPTION	KIT NUMBER
1	605795	1	1	PEDAL, clutch operating	
2	605785	1	1	BUMPER, clutch pedal arm (rubber)	
3	605722	1	1	ARM, clutch pedal	
	904541	1	1	CAPSCREW, 1/2"NC x 1-3/4"	
	904208	1	1	LOCKWASHER, 1/2"	
4	052357	1	1	SPRING, pedal retracting	
5	052358	1	1	LINK, pedal retracting spring	
6	604899	1	1	PIN, retracting spring link	
	900942	1	1	PIN, cotter, 3/32" x 5/8"	
7	051864	1	1	SHAFT, clutch pedal arm	
	911159	1	1	WASHER, plain, SAE std., 1"	
	900811	1	1	PIN, cotter, 3/16" x 1-1/2"	
	904381	1	1	PIN, cotter, 3/16" x 2-1/4"	
8	051033	1	1	ROD, clutch control	
	911043	1	1	NUT, 1/2"NF	
	900805	1	1	PIN, cotter, 1/8" x 3/4"	
9	068389	1	1	YOKE, adjusting	
10	051042	1	1	YOKE ASSEMBLY, sliding (Includes item 11)	
11	049991	2	2	BUSHING, sliding yoke	
12	049993	2	2	PIN, control rod yokes	
	900805	2	2	PIN, cotter, 1/8" x 3/4"	

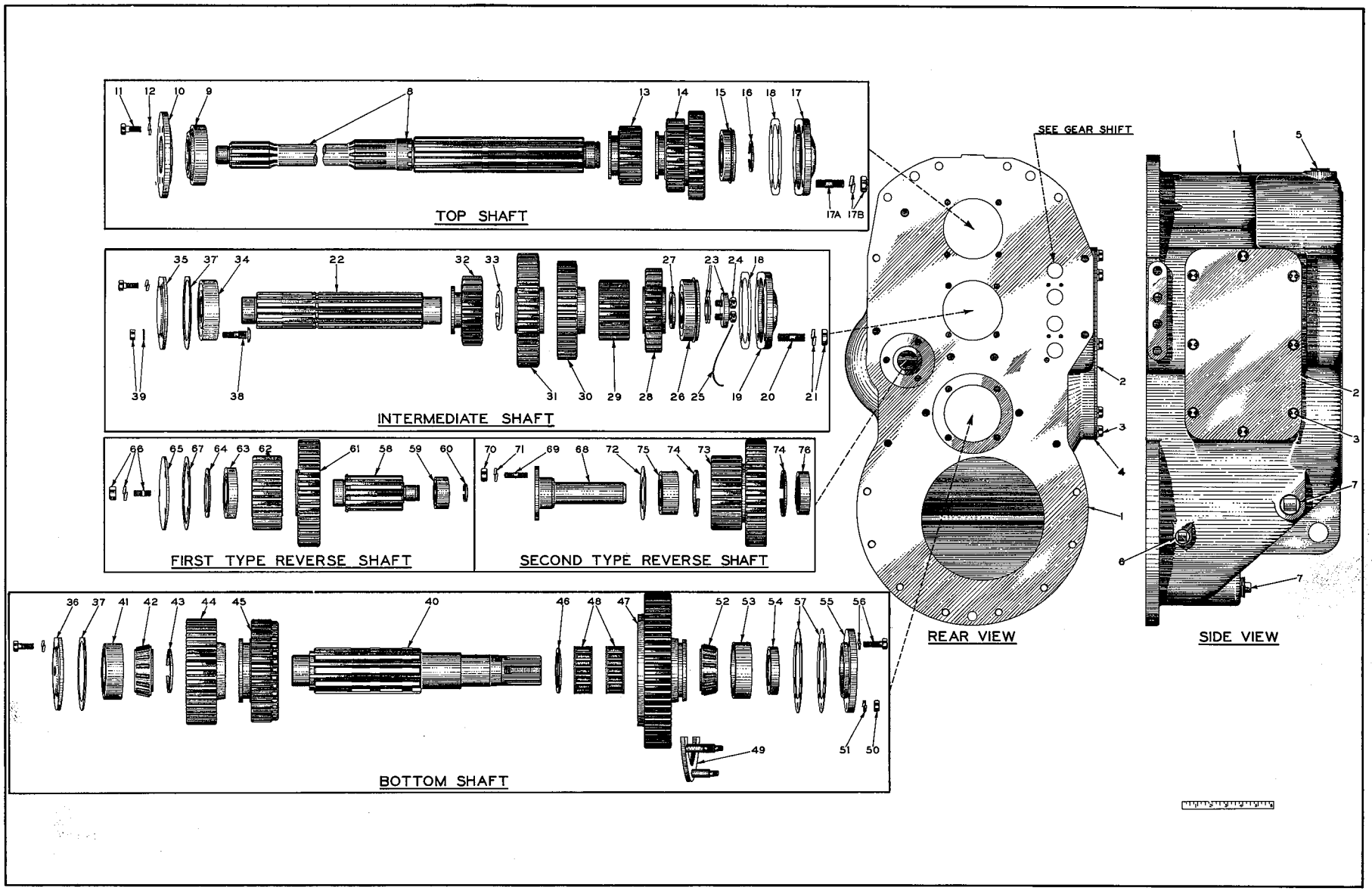

PLATE 1323B——TRANSMISSION

TRANSMISSION
(See Plate 1323B)

ITEM	PART NUMBER	QUANTITY AD3	QUANTITY AD4	DESCRIPTION	KIT NUMBER
A	605714	1	1	TRANSMISSION ASSEMBLY (Includes parts listed below; also all gear shifting forks)(For Graders #328 and up only)	
1	605001	1	-	CASE (Used on graders prior to #328)	
	605637	1	1	CASE (Used on graders #328 and up. When late type case is ordered for graders prior to #684 and for graders #686, #692, #700 and #704, also furnish 2 SCREWS 059120, 2 NUTS 911041 and 2 LOCKWASHERS 912301)	
2	605896	1	1	COVER, case (Used on graders #328 and up)	
3	903629	8	8	CAPSCREW, 3/8"NC x 3/4"	
	904206	8	8	LOCKWASHER, 3/8"	
4	605911	1	1	GASKET, case cover	
5	901666	1	1	PLUG, pipe, ctsk-hd., 1"NPT (Used on graders #328 and up)	
6	912725	1	1	PLUG, pipe, sq-hd., 1/2"NPT (oil level)	
7	049628	2	2	PLUG, oil drain (square head, 1"NPT, magnetic)	
8	604994	1	-	SHAFT, top (Used on graders prior to #328)	
	059089	1	1	SHAFT, top (For graders #328 and up. When required for graders #328 thru #683, #686, #692, #700 or #704, order following parts also: 1 snap RING 050293, 1 BEARING 059093, 1 COVER 059101, and 2 GASKETS 059103)	
9	605174	1	-	BEARING, ball, top shaft - rear (3.346"O.D.)(Graders prior to #328)	
	058966	1	1	BEARING, ball, top shaft - rear (3.937"O.D.)(Graders #328 and up)	
10	605107	1	-	FLANGE, retaining, top shaft rear bearing (Graders prior to #328)	
	051673	1	1	FLANGE, retaining, top shaft rear bearing (Graders #328 and up)	
11	035439	4	4	CAPSCREW, 3/8"NC x 1"	
12	904206	4	4	LOCKWASHER, 3/8"	
13	050939	1	1	PINION, sliding, top shaft (21 teeth)	
14	050952	1	1	PINION, sliding, top shaft (27 and 33 teeth)	
15	058968	1	-	BEARING, ball, top shaft - front (Graders prior to #684, and graders #686, #692, #700 and #704)	
	059093	1	1	BEARING, ball, top shaft - front (Used on graders #684 and up, excluding #686, #672, #700 and #704)	
16	050293	1	1	RING, snap, top shaft (Graders #684 and up, excluding #686, #692, #700 and #704)	
17	604998	1	-	COVER, top shaft front bearing (Graders prior to #684, and graders #686, #692, #700 and #704)	
	059101	1	1	COVER, top shaft front bearing (Graders #684 and up, excluding #686, #692, #700 and #704)	
17A	065118	4	-	STUD (1/2"NC x 1/2"NF x 1-3/4")(Graders prior to #328)	
	605913	4	4	STUD (1/2"NC x 1-5/8")(Graders #328 and up)	
17B	911043	4	-	NUT, 1/2"NF (Graders prior to #328)	
	911035	4	4	NUT, jam, 1/2"NC (Graders #328 and up)	
	904208	4	4	LOCKWASHER, 1/2"	

(Continued)

TRANSMISSION (Cont'd)
(See Plate 1323B)

ITEM	PART NUMBER	QUANTITY AD3	QUANTITY AD4	DESCRIPTION	KIT NUMBER
18	204786	2	-	SHIM (.020" thick)(Graders prior to #684, and graders #686, #692, #700 and #704. Use as required)	
	204766	8	-	SHIM (.005" thick)(Graders prior to #684, and graders #686, #692, #700 and #704. Use as required)	
	056999	2	-	SHIM (.003" thick)(Graders prior to #684, and graders #686, #692, #700 and #704. Use as required)	
	059103	2	2	GASKET, shaft bearing cover (Graders #684 and up, excluding #686, #692, #700 and #704)	
19	604998	1	-	COVER, intermediate shaft front bearing (Graders prior to #684, and graders #686, #692, #700 and #704)	
	059102	1	1	COVER, intermediate shaft front bearing (Graders #684 and up, excluding #686, #692, #700 and #704)	
20	065118	4	-	STUD (1/2"NC x 1/2"NF x 1-3/4")(Graders prior to #328)	
	605913	4	4	STUD (1/2"NC x 1-5/8")(Graders #328 and up)	
21	911043	4	-	NUT, 1/2"NF (Graders prior to #328)	
	911035	4	4	NUT, jam, 1/2"NC (Graders #328 and up)	
	904208	4	4	LOCKWASHER, 1/2"	
22	------	1	-	SHAFT, intermediate (Graders prior to #108. Order 1 SHAFT 605478, 1 NUT 913472 and 1 cotter PIN 900807)	
	605478	1	-	SHAFT, intermediate (Graders #108 thru #327)	
	050937	1	-	SHAFT, intermediate (Graders #328 thru #683, and graders #686, #692, #700 and #704)	
	059091	1	1	SHAFT, intermediate (Graders #684 and up, excluding #686, #692, #700 and #704)	
23	605009	1	-	WASHER, retaining, intermediate shaft front bearing (Graders prior to #328)	
	059022	1	1	WASHER, retaining, intermediate shaft front bearing (Graders #454 and up)	
	059788	6	6	SHIM, retaining washer (.005" thick)(Graders #454 and up. Use as required)	
	059789	5	5	SHIM, retaining washer (.028" thick)(Graders #454 and up. Use as required)	
24	------	1	-	CAPSCREW (Graders prior to #108. Order 1 STUD 605479, 1 NUT 913470 and 1 cotter PIN 900807)	
	605479	1	-	STUD (5/8"NF x 1-3/4")(Graders #108 thru #327. Recommend welding in place)	
	913470	1	-	NUT, jam, slotted, 5/8"NF (Graders #108 thru #327)	
	913472	1	-	NUT, jam, slotted, 3/4"NF (Used only for service with late type 605478 SHAFT)	
	059023	2	2	CAPSCREW (drilled hex head, 7/16"NC x 1")(Used on graders #454 and up)	
25	900807	1	-	PIN, cotter, 1/8" x 1-1/4" (Graders #108 thru #327)	
	023633	1	1	WIRE, locking (1/16" x 12")(Graders #454 and up)	
26	211530	1	-	BEARING, ball, intermediate shaft - front (Graders prior to #684, and graders #686, #692, #700 and #704)	
	059094	1	1	BEARING, ball, intermediate shaft - front (snap-ring type) (Graders #684 and up, excluding #686, #692, #700 and #704)	
27	059092	1	1	SPACER, intermediate shaft front bearing (Graders #684 and up, excluding #686, #692, #700 and #704)	
28	605007	1	1	GEAR, intermediate shaft (31 teeth)	
29	605006	1	1	GEAR, intermediate shaft (21 teeth)	

(Continued)

TRANSMISSION (Cont'd)
(See Plate 1323B)

ITEM	PART NUMBER	QUANTITY AD3	QUANTITY AD4	DESCRIPTION	KIT NUMBER
30	605005	1	1	GEAR, intermediate shaft (37 teeth)	
31	605004	1	1	GEAR, intermediate shaft (43 teeth)	
32	050941	1	1	GEAR, sliding, intermediate shaft (25 teeth)	
33	605003	1	1	RING, snap, intermediate shaft	
34	211530	1	-	BEARING, ball, intermediate shaft - rear (Graders prior to #684, and graders #686, #692, #700 and #704)	
	059095	1	1	BEARING, roller, intermediate shaft - rear (Graders #684 and up, excluding #686, #692, #700 and #704)	
35	605008	1	1	COVER, intermediate shaft rear bearing	
	903630	3	3	CAPSCREW, hex head, 3/8"NC x 1"	
	904206	3	3	LOCKWASHER, 3/8"	
36	068197	1	1	COVER, bottom shaft rear bearing	
	903630	3	3	CAPSCREW, 3/8"NC x 1"	
	904206	3	3	LOCKWASHER, 3/8"	
37	604997	2	2	GASKET, rear bearing covers	
38	059120	2	2	SCREW, retaining, intermediate shaft rear roller bearing (Used on graders #684 and up, excluding #686, #692, #700 and #704)	
39	911041	2	2	NUT, 3/8"NF	
	912301	2	2	LOCKWASHER, external teeth, 3/8"	
40	605011	1	-	SHAFT, bottom (Used on graders prior to #328)	
	050936	1	1	SHAFT, bottom (Used on graders #328 and up)	
41	061088	1	1	CUP, bottom shaft rear bearing	
42	061087	1	1	CONE ASSEMBLY, bottom shaft rear bearing	
43	605080	1	1	RING, snap, bottom shaft	
44	605012	1	1	GEAR, bottom shaft (33 teeth)	
45	050938	1	1	GEAR, sliding, bottom shaft (38 teeth)	
46	605081	1	1	WASHER, thrust, bottom shaft gear	
47	605015	1	1	GEAR, bottom shaft (60 teeth)	
48	061085	2	2	ROLLER ASSEMBLY, bottom shaft	
49	605090	1	1	SEGMENT ASSEMBLY, retaining, bottom shaft gear (Serviced only as a unit)	
50	911041	3	3	NUT, 3/8"NF	
51	904206	3	3	LOCKWASHER, 3/8"	
52	605175	1	1	CONE ASSEMBLY, bottom shaft front bearing	
53	210740	1	1	CUP, bottom shaft front bearing	
54	605093	1	1	SEAL, oil, bottom shaft	
55	605010	1	1	COVER, bottom shaft front bearing	
56	903631	4	4	CAPSCREW, 3/8"NC x 1-1/4"	
	904206	4	4	LOCKWASHER, 3/8"	
57	605082	12	12	SHIM, adjusting, bottom shaft bearings (.005" thick. Use as required)	
	056586	2	2	SHIM, adjusting, bottom shaft bearings (.003" thick. Use as required)	

(Continued)

TRANSMISSION (Cont'd)
(See Plate 1323B)

ITEM	PART NUMBER	QUANTITY AD3	QUANTITY AD4	DESCRIPTION	KIT NUMBER
				NOTE: Items 58 thru 67 were used only on graders prior to serial #328.	
58	604991	1	-	SHAFT, reverse gear	
59	061095	1	-	ROLLER AND RACE ASSEMBLY, reverse gear shaft front bearing	
	061094	1	-	RACE, inner, reverse gear shaft front bearing	
60	061093	1	-	RING, snap, reverse gear shaft	
61	604989	1	-	GEAR, reverse (40 teeth)	
62	604990	1	-	PINION, reverse (22 teeth)	
63	058968	1	-	BEARING, ball, reverse gear shaft - rear	
64	604992	1	-	SPACER, reverse gear shaft rear bearing	
65	205342	1	-	COVER, reverse gear shaft rear bearing	
66	U-3201	3	-	STUD (3/8"NC x 1-1/8")	
	911026	3	-	NUT, 3/8"NC	
	904206	3	-	LOCKWASHER, 3/8"	
67	604993	1	-	GASKET, reverse gear shaft rear bearing cover	
				NOTE: Items 68 thru 76 were used only on graders serial #328 and up.	
68	605915	1	1	SHAFT, reverse gear	
69	605906	3	3	STUD (3/8"NC x 1-1/2")	
70	911026	3	3	NUT, 3/8"NC	
71	904206	3	3	LOCKWASHER, 3/8"	
72	605905	1	1	GASKET, reverse gear shaft	
73	605914	1	1	GEAR, reverse (22 teeth and 40 teeth)	
74	605895	2	2	RING, snap, reverse gear	
75	058967	1	1	BEARING, ball, reverse gear - rear	
76	058974	1	1	BEARING, ball, reverse gear - front	

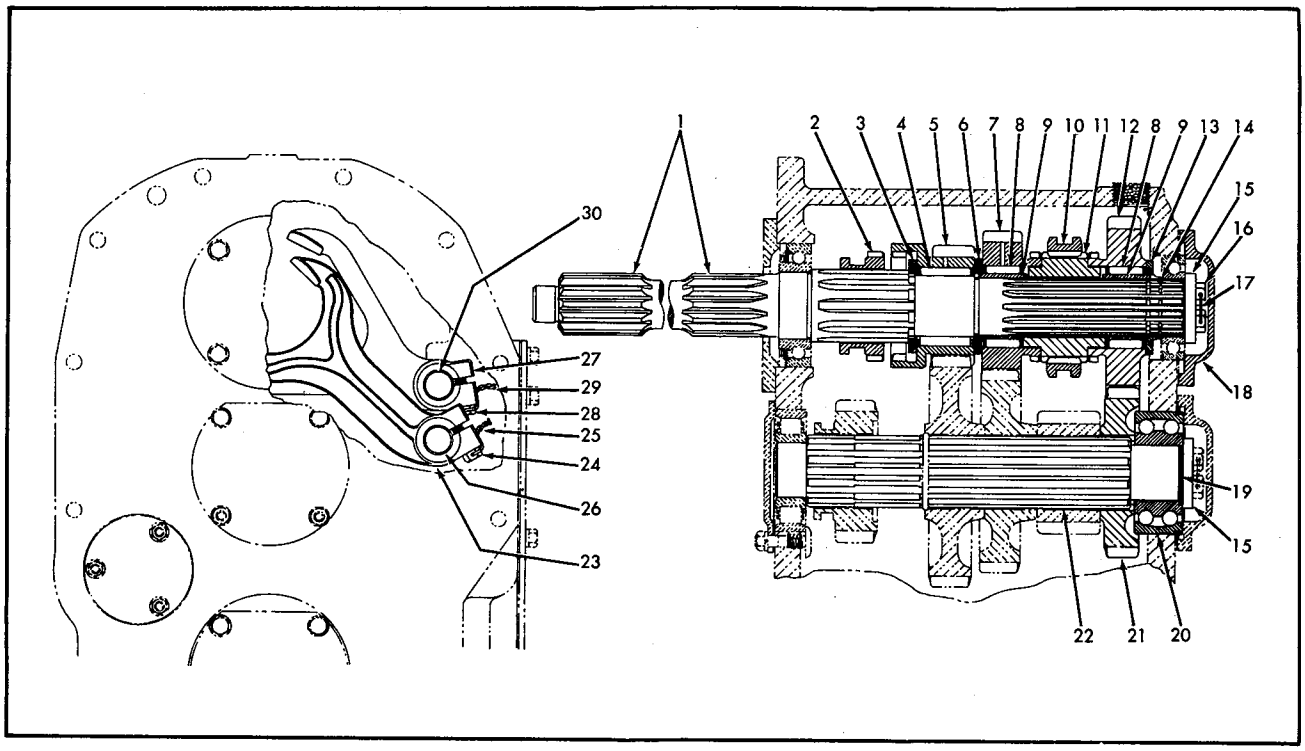

CONSTANT MESH TRANSMISSION

USAGE: Special Equipment. Applicable to the following graders:

ITEM	PART NUMBER	QUANTITY	DESCRIPTION	KIT NUMBER
-	077869	1	TRANSMISSION ASSEMBLY (Same as 605714 TRANSMISSION ASSEMBLY except includes parts listed below)	
1	078194	1	SHAFT, top	
	078174	-	SHAFT, top	
2	075275	1	GEAR, shifting, 1st and 4th speeds (18 teeth)	
3	075276	1	WASHER, spacing, 1st and 4th speed gear	
4	075277	1	BEARING, roller, 1st and 4th speed gear	
5	075278	1	GEAR, 1st and 4th speeds (18 and 21 teeth)	
6	075279	1	WASHER, spacing, 2nd and 5th speed gear	
7	075280	1	GEAR, 2nd and 5th speeds (18 and 27 teeth)	
8	075281	2	BEARING, roller	
9	075282	2	SLEEVE, roller bearing	
10	075284	1	COLLAR, shifting, 2nd, 3rd, 5th and 6th speeds	
11	075283	1	HUB, shifting collar	
12	075285	1	GEAR, 3rd and 6th speeds (33 teeth)	

(Continued)

(Added June, 1952)

ITEM	PART NUMBER	QUANTITY	DESCRIPTION	KIT NUMBER
13	078137	1	WASHER, thrust	
14	078135	1	RING, snap	
15	059022	2	WASHER, retaining, front bearing	
16	059023	2	CAPSCREW (drilled hex-hd., 7/16"NC x 1")	
17	023633	1	WIRE, locking (1/16" x 12")	
18	075287	1	COVER, front bearing	
19	059788	4	SHIM, retaining washer (.005" thick. Use as req'd)	
	059789	1	SHIM, retaining washer (.028" thick. Use as req'd)	
20	075289	1	BEARING, ball, front (snap-ring type)	
21	075288	1	GEAR, 3rd and 6th speeds (31 teeth)	
22	075290	1	SHAFT, intermediate	
23	076659	1	FORK, low	
24	076942	2	CAPSCREW (drilled hex-hd., 3/8"NF x 1-1/2")	
25	023633	2	WIRE, locking (1/16" x 12")	
26	077300	1	SHAFT, low shifting fork	
27	076660	1	FORK, 2nd and 3rd	
28	076942	2	CAPSCREW (drilled hex-hd., 3/8"NF x 1-1/2")	
29	023633	2	WIRE, locking (1/16" x 12")	
30	077299	1	SHAFT, 2nd and 3rd shifting fork	
--	077407	1	CONVERSION KIT, constant mesh transmission (Applicable to models AD3, AD4 Consists of items 1 thru 30)	

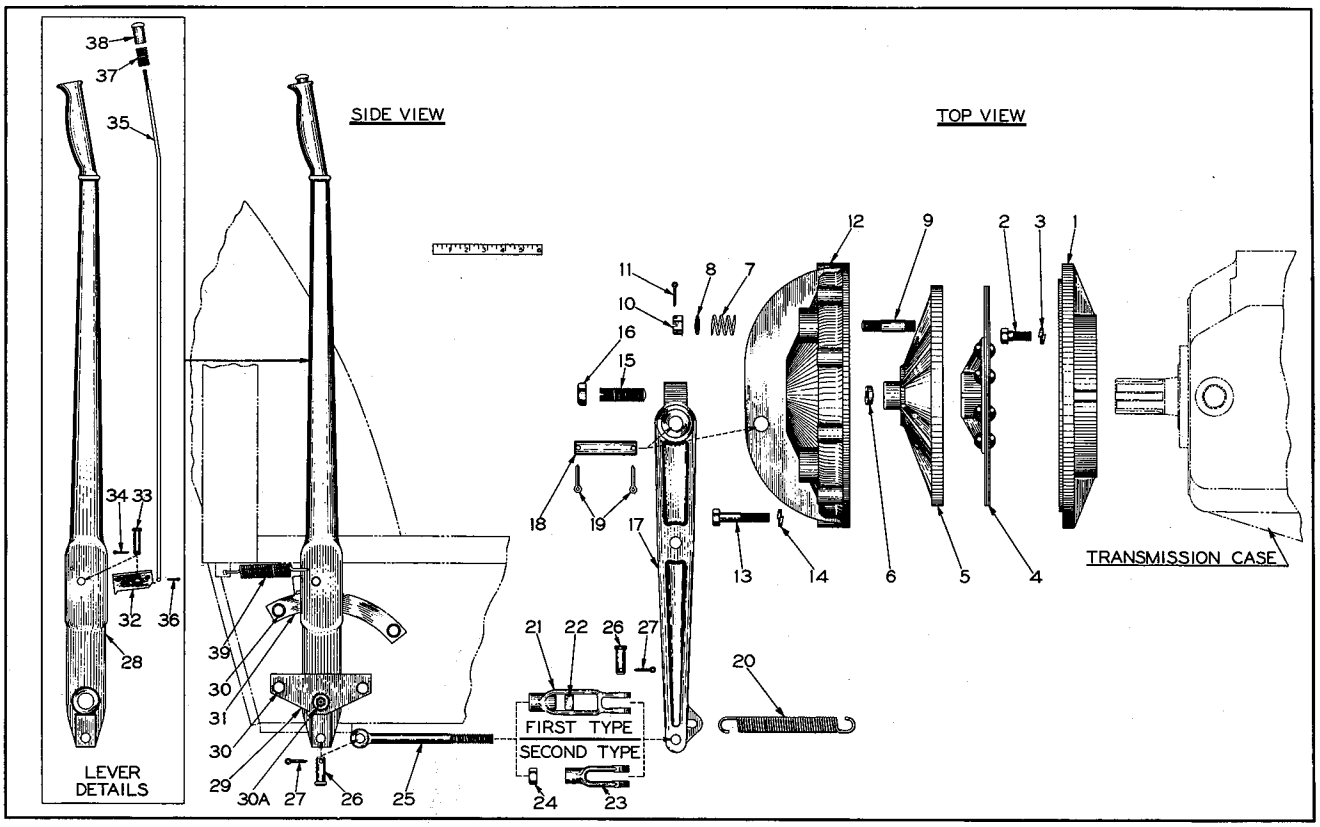

PLATE 1317B— TRANSMISSION BRAKE

TRANSMISSION BRAKE
(See Plate 1317B)

ITEM	PART NUMBER	QUANTITY AD3	QUANTITY AD4	DESCRIPTION	KIT NUMBER
1	604216	1	1	PLATE, pressure - inner	
2	903638	8	8	CAPSCREW, 1/2"NC x 1-1/4"	
3	904208	8	8	LOCKWASHER, 1/2"	
4	604881	1	1	DISC ASSEMBLY, brake (1 HUB, 1 DISC, 8 RIVETS. Serviced only as a unit)	
5	604215	1	1	PLATE, pressure - outer	
6	604880	1	1	INSERT, wear, outer pressure plate	
7	604878	4	4	SPRING, retracting, outer pressure plate	
8	604879	4	4	WASHER, retracting spring	
9	604877	4	4	STUD, retracting, outer pressure plate (5/8"NC x 5/8"NF x 2-7/8")	
10	912840	4	4	NUT, slotted, 5/8"NF	
11	900806	4	4	PIN, cotter, 1/8" x 1"	
12	604214	1	-	COVER (Used on graders prior to #328. Fits later machines also)(Not illustrated)	
	053698	1	1	COVER (Used on graders after #327)	
13	903781	10	10	CAPSCREW, 1/2"NC x 2-3/4"	
14	904208	10	10	LOCKWASHER, 1/2"	
15	913468	1	1	SCREW, set, slotted head, oval point, 3/4"NF x 2-1/2"	
16	910847	1	1	NUT, jam, 3/4"NF	
17	604885	1	1	LEVER, actuating	
18	604887	1	1	PIN, actuating lever	
19	911440	2	2	PIN, cotter, 3/16" x 1-1/8"	
20	604757	1	1	SPRING, retracting, brake lever	
21	604905	1	-	YOKE, brake rod (Used on graders prior to #328)	
22	910882	1	-	NUT, square, 1/2"NC (Used on graders prior to #328)	
23	068389	1	1	YOKE, brake rod (Used on graders #328 and up)	
24	911043	1	1	NUT, hex, 1/2"NF (Used on graders #328 and up)	
25	604906	1	-	ROD, brake (Used on graders prior to #328)	
	605801	1	1	ROD, brake (Used on graders #328 and up)	
26	033072	2	2	PIN, brake rod	
27	910967	2	2	PIN, cotter, 1/8" x 7/8"	
28	604889	1	1	LEVER, operating	
29	604901	1	-	PIVOT, operating lever (Used on graders prior to #572, excluding graders #564, #566, #568, #569 and #570)	
	057742	1	1	PIVOT, operating lever (Used on graders #572 and up, including graders #564, #566, #568, #569 and #570)	
30	903630	4	4	CAPSCREW, 3/8"NC x 1"	
	904206	4	4	LOCKWASHER, 3/8"	
30A	914465	1	1	FITTING, lubricating, straight, 1/8"NPT (Graders #4035 and up)	
31	604904	1	1	RATCHET, operating lever	
32	604895	1	1	PAWL, operating lever	
33	604899	1	1	PIN, pawl	
34	900942	1	1	PIN, cotter, 3/32" x 5/8"	

(Continued)

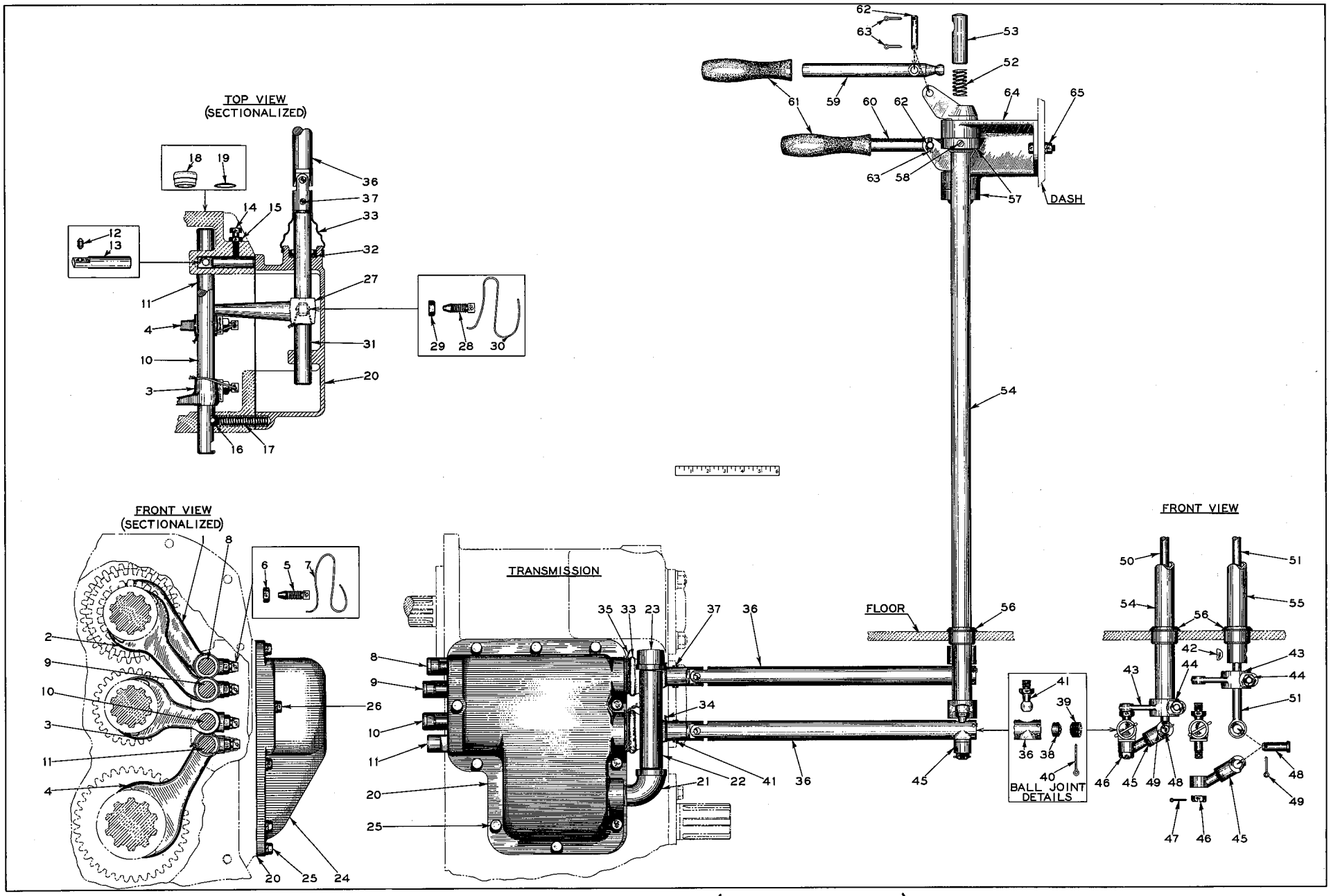

PLATE 1319A—GEAR SHIFT (EARLY AD GRADERS)

TRANSMISSION BRAKE (Cont'd)

ITEM	PART NUMBER	QUANTITY AD3	QUANTITY AD4	DESCRIPTION	KIT NUMBER
35	604896	1	1	ROD, lever pawl	
36	900970	1	1	PIN, cotter, 1/16" x 1/2"	
37	604835	1	1	SPRING, pawl rod	
38	604898	1	1	BUTTON, pawl rod	
39	605603	1	1	SPRING, retracting, operating lever	

GEAR SHIFT
(See Plate 1319A)

USAGE: Model AD Graders prior to serial No. 328.

ITEM	PART NUMBER	QTY.	DESCRIPTION	KIT NUMBER
1	605020	1	FORK, 2nd. and 3rd.	
2	605022	1	FORK, low	
3	605024	1	FORK, reverse	
4	605026	1	FORK, high-low	
5	605028	4	SETSCREW, shifting fork (square head, taper point, 1/2"NF x 1-7/16")	
6	913177	4	NUT, jam, 1/2"NF	
7	023633	4	WIRE, locking (1/16" x 12")	
8	605021	1	SHAFT, 2nd. and 3rd. shifting fork	
9	605023	1	SHAFT, low shifting fork	
10	605025	1	SHAFT, reverse shifting fork	
11	605027	1	SHAFT, high-low shifting fork	
12	605097	2	PLUNGER, interlocking, shifting fork shafts	
13	605096	2	PIN, retaining, interlocking plunger	
14	605098	2	SETSCREW (hex-head, taper point, 3/8"NC x 1-5/8")	
15	903584	2	NUT, jam, 3/8"NC	
16	910181	4	BALL, steel, 9/16" diam.	
17	605084	4	SPRING, shifting shaft locking ball	
18	605095	1	CAP, shifting fork shaft	
19	910006	3	PLUG, expansion, 1-1/4" diam.	
20	605035	1	GASKET, transmission case cover	
21	901726	1	ELBOW, street, 90°, 1"NPT	
22	605101	1	PIPE, transmission oil filling	
23	901755	1	CAP, pipe, 1"NPT	
24	605030	1	COVER, transmission case	
25	910211	9	CAPSCREW, 3/8"NC x 1-1/8"	
	904206	9	LOCKWASHER, 3/8"	
26	053616	1	CAPSCREW, 3/8"NC x 1-3/4"	
	904206	1	LOCKWASHER, 3/8"	
27	605032	2	LEVER, shift selecting	
28	605028	2	SETSCREW (square head, taper point, 1/2"NF x 1-7/16")	
29	913177	2	NUT, jam, 1/2"NF	
30	023633	2	WIRE, locking (1/16" x 12")	

(Continued)

ITEM	PART NUMBER	QTY.	DESCRIPTION	KIT NUMBER
31	605031	2	SHAFT, shift selecting lever	
32	603010	2	SEAL, oil, selecting lever shaft	
33	605034	2	BOOT, dust, selecting lever shaft	
34	------	2	WIRE, locking (1/16" x 5")	
35	023633	2	WIRE, locking (1/16" x 12")	
36	604807	2	ROD ASSEMBLY, control (Includes items 38 thru 41)	
37	604795	2	PIN, straight (5/16" x 1-1/4")	
38	605514	2	SEAT, control rod ball joint	
39	605516	2	SCREW, adjusting, control rod ball joint	
40	914668	2	PIN, cotter, 1/16" x 1-1/4"	
41	605515	2	PIN, ball, control rod	
42	905121	2	KEY, #5 woodruff, 1/8" x 5/8"	
43	604797	2	LEVER, shifting tube	
44	013059	2	CAPSCREW, 3/8"NC x 2"	
	911026	2	NUT, 3/8"NC	
	904206	2	LOCKWASHER, 3/8"	
45	605058	2	LINK, shift selecting	
46	913471	2	NUT, jam, slotted, 1/2"NF	
47	900801	2	PIN, cotter, 3/32" x 3/4"	
48	033072	2	PIN, shift selecting link	
49	910967	2	PIN, cotter, 1/8" x 7/8"	
50	604804	1	ROD, shift selecting - long	
51	604805	1	ROD, shift selecting - short	
52	604806	2	SPRING, shift selecting rod	
53	604783	2	PLUNGER, shift selecting rod	
54	604787	1	TUBE, shift control - long	
55	604788	1	TUBE, shift control - short	
56	604786	2	BUSHING, control tube	
57	604791	2	COLLAR, control tube (When ordered for graders prior to #51 also furnish SETSCREW 902870)	
58	903835	2	SETSCREW, socket head, cup point, 1/2"NC x 3/8" (Graders prior to #51)	
	902870	2	SETSCREW, socket head, cup point, 3/8"NC x 3/8" (Graders #51 and up)	
59	604460	1	LEVER, gear shifting - long	
60	604784	1	LEVER, gear shifting - short	
61	600940	2	GRIP, gear shifting lever	
62	601935	2	PIN, gear shifting lever	
63	900805	4	PIN, cotter, 1/8" x 3/4"	
64	604347	1	BRACKET, gear shifting levers	
65	013058	2	CAPSCREW, 3/8"NC x 1-1/4"	
	911034	2	NUT, jam, 3/8"NC	
	904206	2	LOCKWASHER, 3/8"	

MEMO

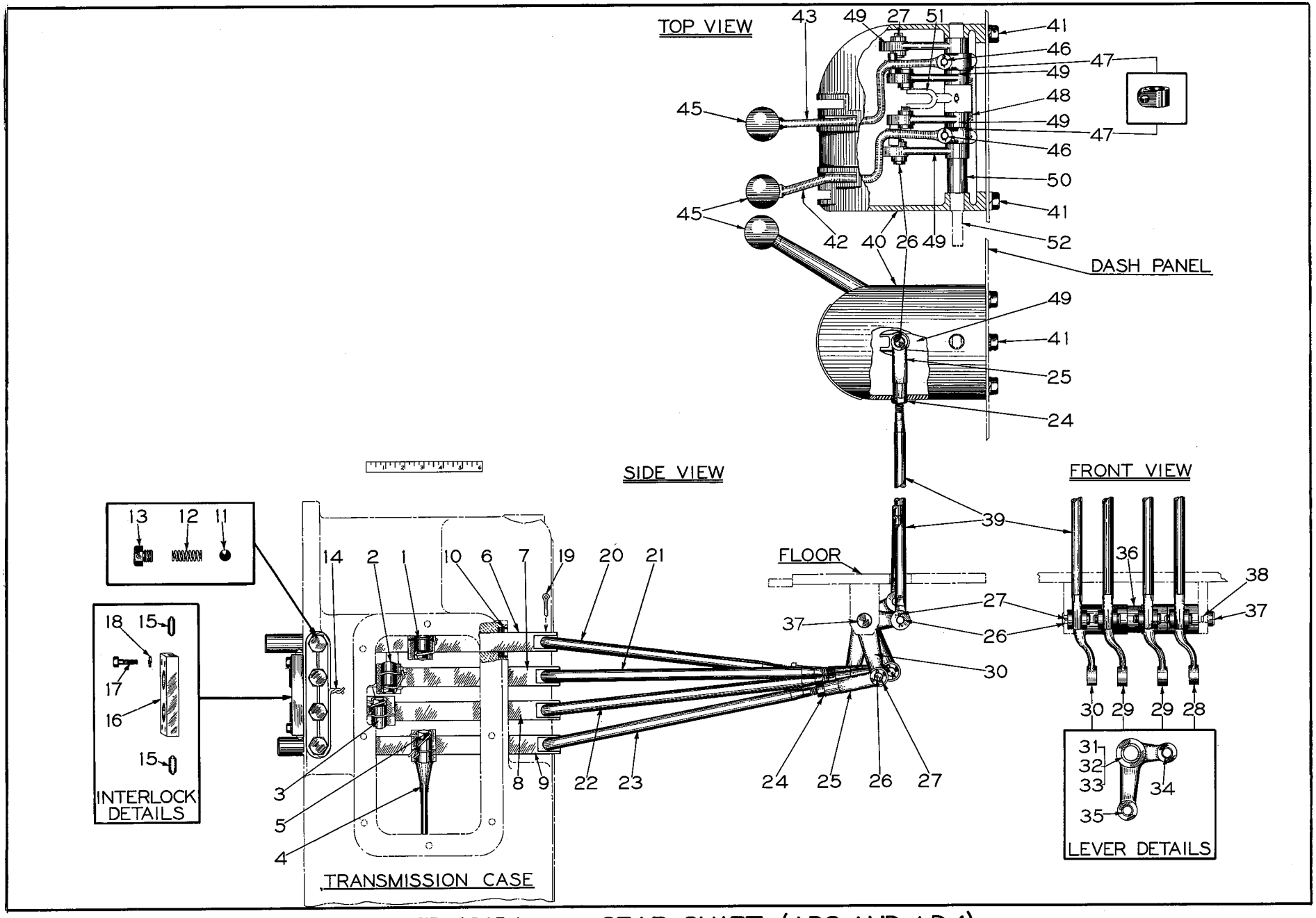

PLATE 1315A—— GEAR SHIFT (AD3 AND AD4)

GEAR SHIFT
(See Plate 1315A)

USAGE: Model AD4 Graders, and Model AD3 Graders serial No. 328 and up.

ITEM	PART NUMBER	QUANTITY AD3	QUANTITY AD4	DESCRIPTION	KIT NUMBER
1	605631	1	1	FORK, 2nd. and 3rd.	
2	605634	1	1	FORK, low	
3	605632	1	1	FORK, reverse	
4	605633	1	1	FORK, high-low	
5	045617	4	4	CAPSCREW, shifting fork (drilled hex head, 3/8"NC x 1-1/4")	
	023633	4	4	WIRE, locking (1/16" x 12")	
6	605901	1	1	SHAFT, 2nd. and 3rd. shifting fork	
7	605902	1	1	SHAFT, low shifting fork	
8	605903	1	1	SHAFT, reverse shifting fork	
9	605904	1	1	SHAFT, high-low shifting fork	
10	605898	4	4	SEAL, oil, shifting fork shaft	
11	910181	4	4	BALL, steel, 9/16" diam.	
12	605909	4	4	SPRING, shifting shaft locking ball	
13	605910	4	4	PLUG, shifting shaft locking ball	
14	023633	1	1	WIRE, locking (1/16" x 12")	
15	605900	2	2	PLUNGER, interlocking, shifting fork shafts	
16	605899	1	1	GUIDE, shifting shaft interlocking plunger	
17	905657	4	4	CAPSCREW, 1/4"NC x 1"	
18	904204	4	4	LOCKWASHER, 1/4"	
19	913115	4	4	PIN, cotter, 5/32" x 3/4"	
20	606012	1	1	ROD, gear shifting, 2nd. and 3rd.	
21	606011	1	1	ROD, gear shifting, low	
22	606013	1	1	ROD, gear shifting, reverse	
23	606014	1	1	ROD, gear shifting, high-low	
24	911042	8	8	NUT, hex, 7/16"NF	
25	605973	8	8	YOKE, shifting rods	
26	051049	12	12	PIN, shifting rod yokes	
27	900801	12	12	PIN, cotter, 3/32" x 3/4"	
28	606018	1	1	BELLCRANK ASSEMBLY, 2nd. and 3rd. shift (Includes items 31, 34 and 35)	
29	606016	2	2	BELLCRANK ASSEMBLY, low and reverse shift (Includes items 32, 34 and 35)	
30	606017	1	1	BELLCRANK ASSEMBLY, high-low shift (Includes items 33 thru 35)	
31	606010	1	1	BUSHING, bellcrank (oilite bronze, 1-5/8" long)	
32	606008	2	2	BUSHING, bellcrank (oilite bronze, 1-5/16" long)	
33	606009	1	1	BUSHING, bellcrank (oilite bronze, 1-1/2" long)	
34	051047	8	8	BUSHING, bellcrank (steel, 1/4" long)	
35	051044	4	4	BUSHING, bellcrank (steel, 5/16" long)	

(Continued)

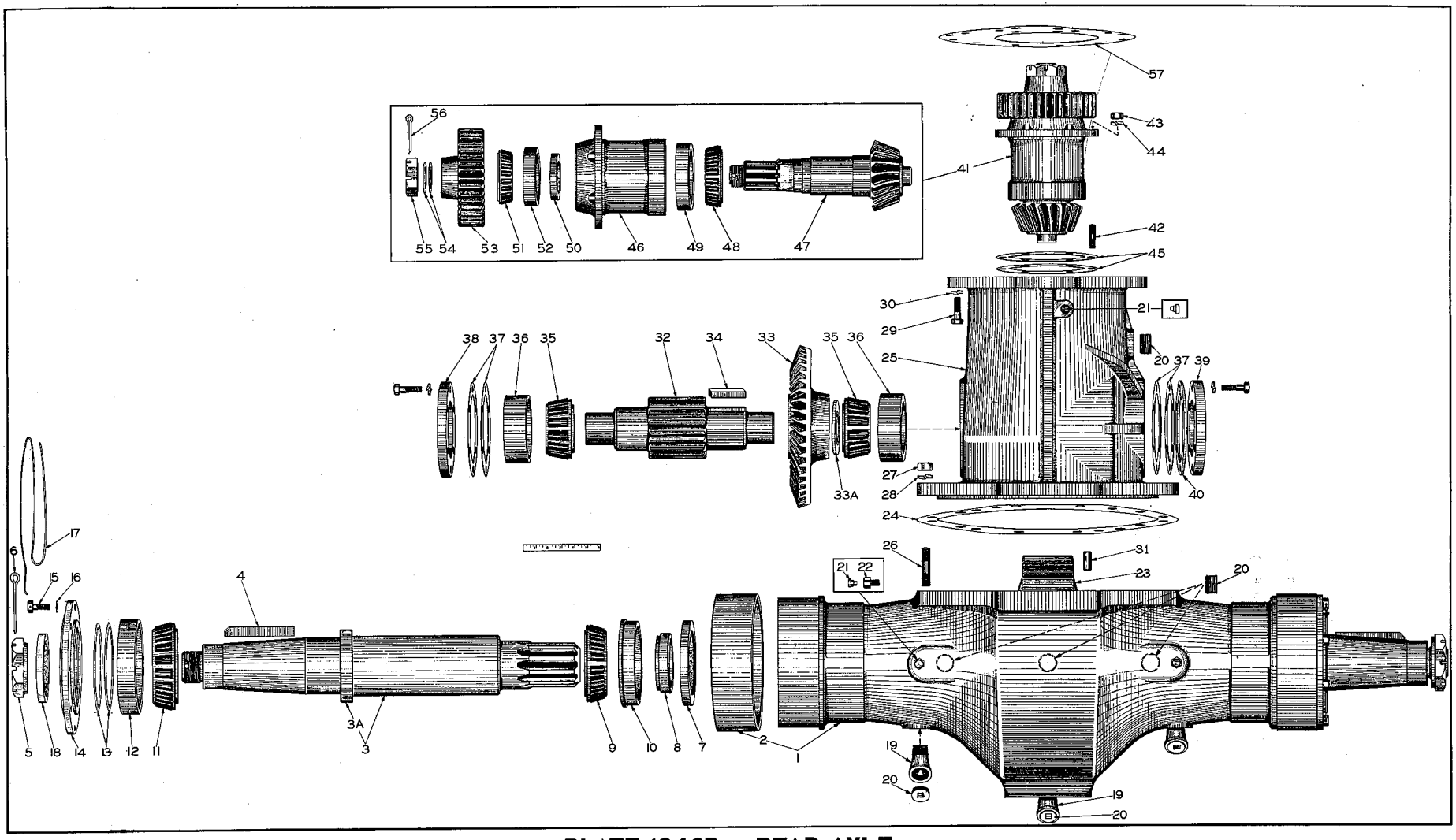

PLATE 1343B—REAR AXLE

GEAR SHIFT (Cont'd)

ITEM	PART NUMBER	QUANTITY AD3	QUANTITY AD4	DESCRIPTION	KIT NUMBER
36	606003	1	1	SPACER, bellcrank	
37	606007	1	1	SHAFT, bellcrank	
38	904002	1	1	PIN, cotter, 1/8" x 2"	
39	606005	4	4	ROD, gear shifting	
40	605768	1	1	HOUSING, gear shift	
41	035221	3	3	CAPSCREW, 1/2"NC x 1"	
	904208	3	3	LOCKWASHER, 1/2"	
42	055812	1	1	LEVER, high-low and reverse (When required for graders prior to #588 also order 1 LEVER 055795 and 1 SPRING 054453)	
43	055795	1	1	LEVER, 1st., 2nd. and 3rd. (When required for graders prior to #588 also order 1 LEVER 055812 and 1 SPRING 054453)	
45	U-171	2	2	KNOB, gear shift lever (bakelite)	
46	606006	2	2	PIN, gear shift lever pivot	
	900805	4	4	PIN, cotter, 1/8" x 3/4"	
47	605735	2	2	PIVOT, gear shift lever	
48	035887	1	-	SPRING, gear shift lever (Used on grader prior to #588)	
	054453	1	1	SPRING, gear shift lever (Used on grader #588 and up)	
49	051048	4	4	LEVER, gear shift selection	
50	606004	1	1	SPACER, gear shift selection levers	
51	------	1	1	LEVER, throttle (See ENGINE CONTROLS)	
52	------	1	1	SHAFT, throttle (See ENGINE CONTROLS)	

REAR AXLE
(See Plate 1343B)

1	605083	1	1	HOUSING ASSEMBLY, rear axle (Includes item 2)(When required for graders prior to #328 also order item 22)	
2	605053	2	2	BUSHING, housing	
3	051198	2	2	SHAFT ASSEMBLY, rear axle (Includes item 3A)(When required for graders prior to #328 also order 1 CAP 051148, 1 CASE 051149 and 1 BEARING 051152)	
	→ 096926				
3A	604971	2	2	COLLAR, rear axle shaft	
4	051151	2	2	KEY, rear axle shaft	
5	604968	2	2	NUT, rear axle shaft (hex, slotted, 2-1/2"NF)	
6	911690	2	2	PIN, cotter, 1/4" x 3-1/4"	
7	604974	2	2	SEAL, oil, rear axle shaft - inner	
8	604972	2	2	SPACER, rear axle shaft inner bearing	
9	605339	2	2	CONE ASSEMBLY, rear axle shaft inner bearing	
10	605338	2	2	CUP, rear axle shaft inner bearing	
11	605337	2	2	CONE ASSEMBLY, rear axle shaft outer bearing	
12	605336	2	2	CUP, rear axle shaft outer bearing	
13	604969	20	20	SHIM, adjusting, rear axle shaft bearings (.005" thick)(Use as required)	

(Continued)

ITEM	PART NUMBER	QUANTITY AD3	QUANTITY AD4	DESCRIPTION	KIT NUMBER
14	604962	2	2	COVER, rear axle shaft outer bearing	
15	604963	16	16	CAPSCREW (drilled hex head, 1/2"NC x 1-3/8")	
16	906961	16	16	LOCKWASHER, internal teeth, 1/2"	
17	052519	2	2	WIRE, locking (1/16" x 39")	
18	604973	2	2	SEAL, oil, rear axle shaft - outer	
19	911076	3	3	ELBOW, street, 45°, 1"NPT	
20	901666	7	7	PLUG, pipe, ctsk-hd., 1"NPT	
21	605132	3	3	VENT, air, rear axle and cross shaft housings	
22	605917	2	2	ADAPTER, rear axle housing air vent (Used on graders #328 and up)	
23	060994	1	1	GEAR, rear axle (72 teeth)	
24	605106	2	2	GASKET, cross shaft housing	
25	604977	1	1	HOUSING, cross shaft	
26	605416	16	16	STUD (5/8"NC x 3-1/16")	
27	911029	16	16	NUT, 5/8"NC	
28	904209	16	16	LOCKWASHER, 5/8"	
29	AM-8801	12	12	CAPSCREW, 1/2"NC x 2"	
30	904208	12	12	LOCKWASHER, 1/2"	
31	910179	2	2	PIN, dowel, cross shaft housing (5/8" x 1-1/2")	
32	057956	1	1	SHAFT AND PINION, cross (17 teeth)	
33	604981	1	1	GEAR, bevel, cross shaft (45 straight teeth)(Graders prior to #1790)	
	057809	1	1	GEAR, bevel, cross shaft (45 spiral teeth)(Graders #1790 and up)	
33A	066673	1	1	WASHER, cross shaft bevel gear (Used on graders No. 2784* and up)	
34	604982	1	1	KEY, cross shaft bevel gear (1/2" x 3/4" x 2-11/16")	
35	605335	2	2	CONE ASSEMBLY, cross shaft bearing	
36	605334	2	2	CUP, cross shaft bearing	
37	605085	16	16	SHIM, adjusting, cross shaft bearings (.005" thick. Use as required)	
	065042	4	4	SHIM, adjusting, cross shaft bearings (.015" thick. Use as required)	
38	604984	1	1	COVER, cross shaft right bearing	
	904541	6	6	CAPSCREW, 1/2"NC x 1-3/4"	
	904208	6	6	LOCKWASHER, 1/2"	
39	604984	1	1	COVER, cross shaft left bearing (Graders prior to No. 2784**)	
	904541	6	6	CAPSCREW, 1/2"NC x 1-3/4"	
	904208	6	6	LOCKWASHER, 1/2"	
	066751	1	1	COVER, cross shaft left bearing (Graders No. 2784* and up)	
	903640	6	6	CAPSCREW, 1/2"NC x 2"	
	904208	6	6	LOCKWASHER, 1/2"	
40	066674	1	1	WASHER, spacing, cross shaft bearing cover (Used on graders No. 2784* and up)	
41	057812	1	1	PINION AND SHAFT ASSEMBLY (Consists of items 46 thru 56. Has spiral bevel teeth)(For graders #1790 and up)	
42	061842	6	6	STUD (1/2"NC x 1/2"NF x 2")	
43	911043	6	6	NUT, 1/2"NF	
44	904208	6	6	LOCKWASHER, 1/2"	

(Continued)

ITEM	PART NUMBER	QUANTITY AD3	QUANTITY AD4	DESCRIPTION	KIT NUMBER
45	U-78	4	4	SHIM, adjusting, bevel pinion mesh (.005" thick. Use as req'd)	
	U-314	3	3	SHIM, adjusting, bevel pinion mesh (.015" thick. Use as req'd)	
46	065540	1	1	CARRIER ASSEMBLY, bevel pinion and shaft (Includes items 49 and 52)	
47	604958	1	-	PINION AND SHAFT (18 straight bevel teeth)(Use on graders prior to #159. Order PINION AND SHAFT 605476, NUT 605477 and PIN 901345)	
	605476	1	1	PINION AND SHAFT (18 straight bevel teeth)(Graders #158 thru #1789)	
	057810	1	1	PINION AND SHAFT (18 spiral bevel teeth)(Graders #1790 and up)	653982
48	065870	1	1	CONE ASSEMBLY, bevel pinion shaft rear bearing	
49	061086	1	1	CUP, bevel pinion shaft rear bearing	
50	604986	1	1	SEAL, oil, bevel pinion shaft	
51	061089	1	1	CONE ASSEMBLY, bevel pinion shaft front bearing	
52	061090	1	1	CUP, bevel pinion shaft front bearing	
53	604987	1	1	GEAR, bevel pinion shaft (36 teeth)(Graders prior to #1834)	
	064405	1	1	GEAR, bevel pinion shaft (36 teeth)(Graders after #1834 and up)	
54	605494	8	8	SHIM, adjusting, pinion shaft bearings (.002" thick. Use as req'd)	
	605493	6	6	SHIM, adjusting, pinion shaft bearings (.005" thick. Use as req'd)	
	605492	5	5	SHIM, adjusting, pinion shaft bearings (.020" thick. Use as req'd)	
55	605477	1	1	NUT, bevel pinion shaft (hex, slotted)	
56	901345	1	1	PIN, cotter, 1/4" x 2-1/2"	
57	604978	1	1	GASKET, cross shaft housing to transmission case	

*Excluding graders No. 2789, 2793, 2799, 2801, 2802 and 2803

**Including graders No. 2789, 2793, 2799, 2801, 2802 and 2803

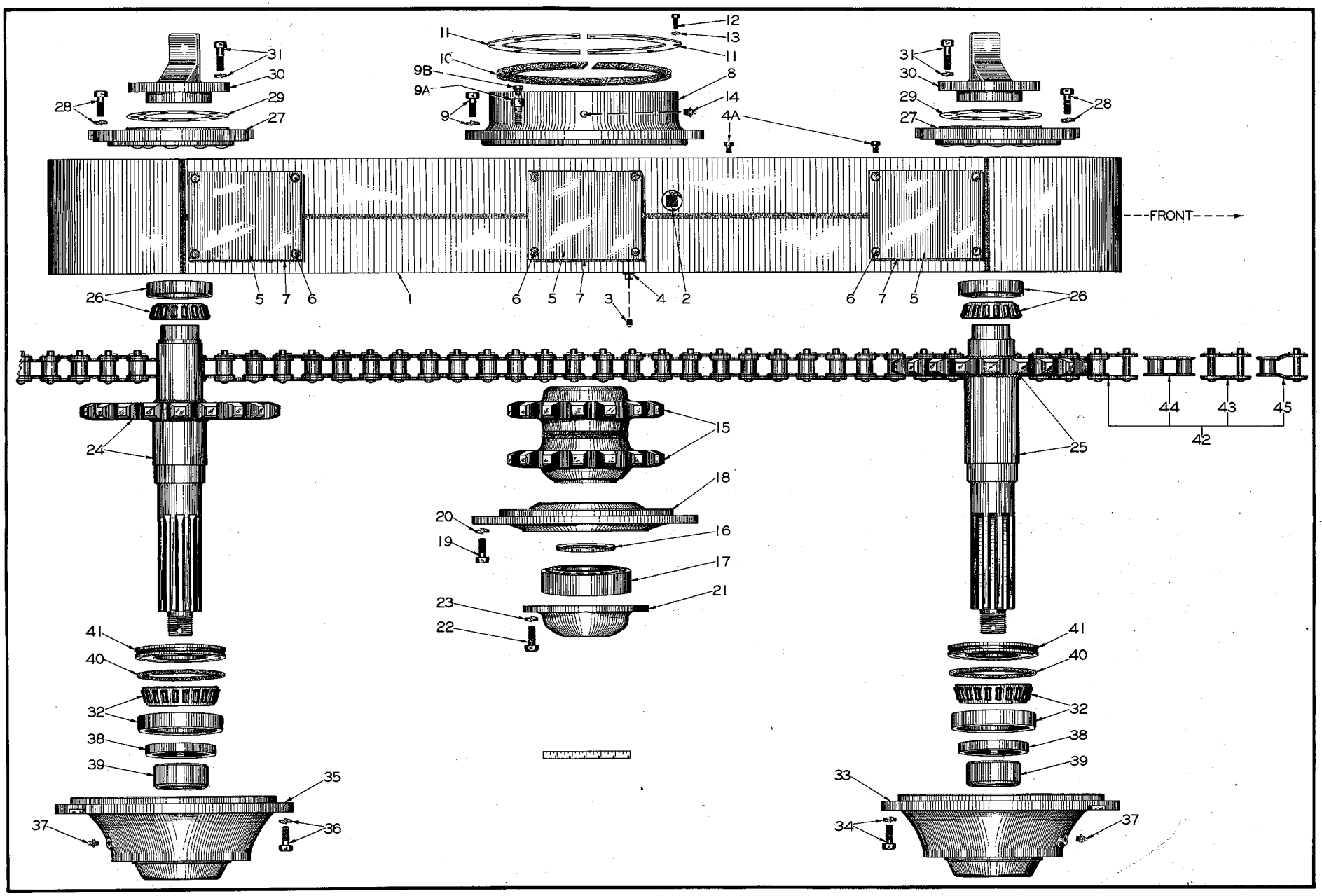

PLATE 1366A — TANDEMS

TANDEMS
(See Plates 1366A and 2111)

ITEM	PART NUMBER	QUANTITY AD3	QUANTITY AD4	DESCRIPTION	KIT NUMBER
1	604470	2	2	CASE, tandem (Not for graders with low-speed tandems. See item 50)	
2	912768	2	2	PLUG, pipe, 1"NPT (oil filling hole)	
3	901652	2	2	PLUG, pipe, 1/4"NPT (oil level checking)	
4	912725	2	2	PLUG, pipe, 1/2"NPT (oil drain)	
4A	903627	4	4	CAPSCREW, 3/8"NC x 1/2" (For plugging holes)	
5	604481	6	6	COVER, case access holes	
6	903630	24	24	CAPSCREW, 3/8"NC x 1"	
	904206	24	24	LOCKWASHER, 3/8"	
7	604482	6	6	GASKET, case cover	
8	604489	2	2	HUB, tandem case	
9	903638	22	22	CAPSCREW, 1/2"NC x 1-1/4"	
	904208	22	22	LOCKWASHER, 1/2"	
				NOTE: Items 9A and 9B were used on graders serial No. 1702 and up altho they may be installed on prior machines also.	
9A	064129	2	2	ADAPTER, air vent	
	904208	2	2	LOCKWASHER, 1/2"	
9B	605132	2	2	VENT, air, tandem case	
10	604487	2	2	SEAL, case hub	
11	604488	4	4	RING, retaining, case hub seal	
12	903626	20	20	CAPSCREW, 5/16"NC x 3/4"	
13	904205	20	20	LOCKWASHER, 5/16"	
14	914465	2	2	FITTING, lubricating, straight, 1/8"NPT	
15	051150	2	2	SPROCKET, driving (15 teeth)(Not for graders equipped with low-speed tandems. See item 51)	
16	604484	2	-	SPACER, rear axle tandem bearing (Used on graders prior to #328)	
17	604926	2	-	BEARING, roller, rear axle (5-1/2"O. D.)(Used on graders prior to #328)	
	051152	2	2	BEARING, roller, rear axle (6-5/16"O. D.)(Graders #328 and up)	
18	604474	2	-	CASE, rear axle bearing (5-1/2" bore)(Graders prior to #328)	
	051149	2	2	CASE, rear axle bearing (6-5/16" bore)(Graders #328 and up)	
19	903638	24	24	CAPSCREW, 1/2"NC x 1-1/4"	
20	904208	24	24	LOCKWASHER, 1/2"	
21	604171	2	-	CAP, rear axle bearing (Used on graders prior to #328)	
	051148	2	2	CAP, rear axle bearing (Used on graders #328 and up)	
22	903638	12	12	CAPSCREW, 1/2"NC x 1-1/4"	
23	904208	12	12	LOCKWASHER, 1/2"	
24	604380	2	-	SPROCKET AND SHAFT, rear wheel (keywayed)(Used on graders prior to #328)(Not illustrated)	
	051142	2	2	SPROCKET AND SHAFT, rear wheel (splined)(Used on graders #328 and up)	
	066990	2	2	SPROCKET & SHAFT, rear wheel (tapered & Keywayed)(Used f/Special Service to replace Splined Shaft on Grader w/Electric Brakes. (Required wheel 075666) 075768	

Continued

ITEM	PART NUMBER	QUANTITY AD3	QUANTITY AD4	DESCRIPTION	KIT NUMBER
25	604377	2	-	SPROCKET & SHAFT, front wheel (keywayed)(Used on Graders prior to #328)(Not illustrated)	
	051146	2	2	SPROCKET & SHAFT, front wheel (splined)(Used on Graders #328 & up)	
	066988	2	2	SPROCKET & SHAFT, front wheel (tapered & keywayed)(Used f/Spec. Service to replace splined shaft on Grader w/Elec. Brakes. Reg. wheel 075666)	076097
26	604928	4	4	BEARING, roller, tandem wheel shafts - inner (Each consists of 1 CUP and 1 ROLLER ASSEMBLY. Serviced only as a unit)	
27	604480	4	4	ECCENTRIC, tandem wheel shaft - inner	
28	903638	40	40	CAPSCREW, 1/2"NC x 1-1/4"	
	904208	40	40	LOCKWASHER, 1/2"	
29	064763	4	4	SHIM, adjusting, wheel shaft bearings (.005" thick)(Use as required)	
	604477	36	36	SHIM, adjusting, wheel shaft bearings (.010" thick)(Use as required)	
30	604486	4	4	STOP, tandem	
31	903639	40	40	CAPSCREW, 1/2"NC x 1-1/2"	
	904208	40	40	LOCKWASHER, 1/2"	
32	604927	4	4	BEARING, roller, tandem wheel shafts - outer (Each consists of 1 CUP and 1 ROLLER ASSEMBLY. Serviced only as a unit)	
33	605087	2	-	ECCENTRIC, front wheel shaft - outer (Graders prior to #328)	
	051140	2	2	ECCENTRIC, front wheel shaft - outer (Graders #328 and up)	
34	903638	20	20	CAPSCREW, 1/2"NC x 1-1/4"	
	904208	20	20	LOCKWASHER, 1/2"	
35	605195	2	-	ECCENTRIC, rear wheel shaft - outer (Graders prior to #328)	
	051140	2	2	ECCENTRIC, rear wheel shaft - outer (Graders #328 and up)	
36	903638	20	20	CAPSCREW, 1/2"NC x 1-1/4"	
	904208	20	20	LOCKWASHER, 1/2"	
37	914465	4	4	FITTING, lubricating, straight, 1/8"NPT	
38	604479	4	-	SEAL, oil, wheel shaft (4-1/8"O. D.)(Graders prior to #328)	
	051145	4	4	SEAL, oil, wheel shaft (4-7/8"O. D., 3-3/4"I. D.)(Grader #328 & up)	
	075767	4	4	SEAL, oil, wheel shaft (4-7/8"O. D., 3"I. D.)(f/Spec. Service Shafts 066988 and 066990 only)	076097, 075768
39	051144	4	4	SPACER, wheel shaft (Used on graders #328 and up)	
40	AM-8578	4	4	RING, sealing, bearing compartment (Used on graders #328 and up)	
41	051141	4	4	RETAINER, bearing compartment sealing ring (Graders #328 and up)	
42	604483	4	4	CHAIN, driving (45 links, 2" pitch. Consists of items 43 thru 45)(Not for graders equipped with low-speed tandems. See item 53)	
43	605508	88	88	LINK, connecting, driving chain (Includes side BAR and cotter PINS)	
44	605578	88	88	LINK, roller, driving chain	
45	605507	4	4	LINK, offset, driving chain (Includes connecting PIN and cotter PIN)	
46	051199	2	-	SLEEVE, adapting, rear axle tandem bearing (3.147"I. D. x 3-9/16"O. D. x 1-9/16" long)(Required to install BEARING 051152 on graders prior to #328. Not illustrated)	

(Continued)

ITEM	PART NUMBER	QUANTITY AD3	QUANTITY AD4	DESCRIPTION	KIT NUMBER
				NOTE: Parts listed below are applicable only to special graders equipped with low-speed tandems. See Plate 2111.	
50	064016	2	2	CASE, tandem	
51	062107	2	2	SPROCKET, driving (12 teeth)	
52	063999	2	2	RING, spacing, rear axle tandem bearing	
53	064005	8	8	CHAIN, driving (30 links, 2" pitch. See items 43 and 44 for repair parts)	
54	064013	4	4	SPROCKET, driven (20 teeth)	
55	063996	40	40	CAPSCREW (drilled end, 5/8"NF x 2")	
	912840	40	40	NUT, slotted, 5/8"NF	
	900806	40	40	PIN, cotter, 1/8" x 1"	
56	064006	4	4	SPROCKET AND SHAFT, intermediate (10 teeth)	
57	604928	8	8	BEARING, roller, intermediate shaft (Each consists of 1 CUP and 1 ROLLER ASSEMBLY. Serviced only as a unit)	
58	604480	8	8	ECCENTRIC, intermediate shaft	
	903628	80	80	CAPSCREW, 1/2"NC x 1-1/4"	
	904208	80	80	LOCKWASHER, 1/2"	
59	064010	8	8	COVER, intermediate shaft bearing	
	903639	40	40	CAPSCREW, 1/2"NC x 1-1/2"	
	904208	40	40	LOCKWASHER, 1/2"	
60	604477	72	72	SHIM, bearing cover (.010" thick. Use as required)	

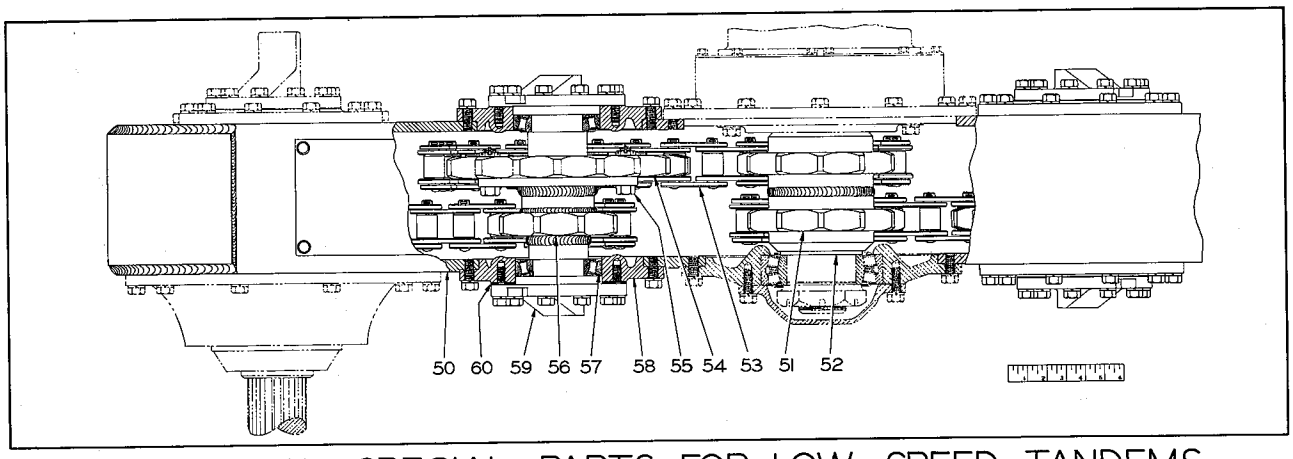

PLATE 2111—SPECIAL PARTS FOR LOW-SPEED TANDEMS

MEMO

CHASSIS PAGE NUMBER

Brake Compensator Parts (Hydraulic) 147
Brake Controller Parts (Electric) 156
Brake Cylinder Parts (Hydraulic) 151
Brake Drum 141
Brake Parts (Electric) 155
Brake Parts (Hydraulic) 149
Brake System (Electric) 152
Brake System (Hydraulic) 145
Brake (Transmission) 121
Canopy and Enclosures 249, 251, 253
Circle Turn and Parts 173, 175
Control Shafts 193, 245
Engine Controls 213, 217
Floor Plate 207, 209
Frame 139
Front Axle 169
Front Wheel Spindles 159
Hood 203, 205
Hood Side Plates 269
Moldboard 177
Moldboard Drawbar and Circle 173
Moldboard Extensions 178
Moldboard Lift 185
Moldboard Side Shift 181
Painting and Marking 142
Power Control Box 189
Power Take-off Group 197
Power Take-off Parts 195, 199, 200
Radiator Shell 203, 205
Radiator Shutter 203
Scarifier 238, 239, 241
Seat 207, 209, 211
Steering Control 157
Steering Gear and Parts 159, 163
Throttle Control 217
Tires Tubes and Rims 142
Tool Box 267
Transfers 142
Wheel Lean 167, 169
Wheels 141

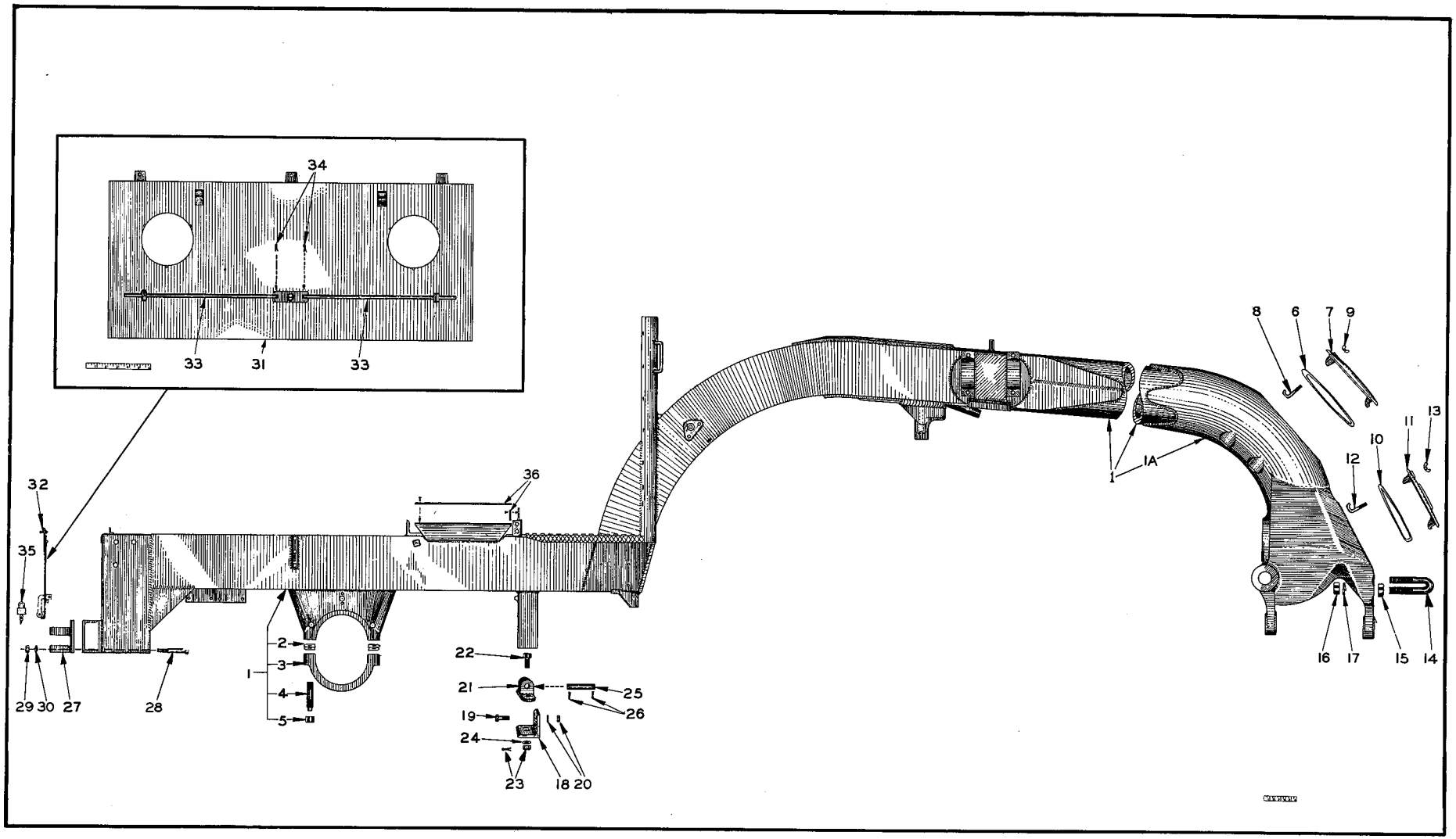

PLATE 1382B—FRAME

FRAME
(See Plate 1382B)

ITEM	PART NUMBER	QUANTITY AD3	QUANTITY AD4	DESCRIPTION	KIT NUMBER
1	604500	1	-	FRAME ASSEMBLY (Includes items 1A thru 5)(Used on graders prior to #328)	
	605833	1	1	FRAME ASSEMBLY (Includes items 1A thru 5)(Used on graders #328 and up. For graders prior to #564, or for graders #565, #567 and #571, also order 1 PIVOT 057742. If for graders prior to #3314, also order 1 DRIVE ASSEMBLY 061875, 1 TANK ASSEMBLY 073754, 2 STRAP ASSEMBLIES 068191, and 1 ROD 068783 if for AD3 or 1 ROD 068195 if for AD4)	
1A	061674	1	1	HEAD CASTING, frame (Welded in FRAME ASSEMBLY)	
2	604493	24	24	SHIM, trunnion cap (Use as required)	
3	054853	2	2	CAP, trunnion	
4	602258	4	4	STUD, (1"NF x 4-3/4")	
5	600236	4	4	NUT, high, 1"NF)	
6	602827	1	1	GASKET, steering chain inspection cover	
7	601692	1	1	COVER, steering chain inspection	
8	602765	1	1	J-BOLT	
9	915018	1	1	NUT, wing, 1/2"NC	
10	604634	1	1	GASKET, steering gear inspection cover	
11	604107	1	1	COVER, steering gear inspection	
12	602765	1	1	J-BOLT	
13	915018	1	1	NUT, wing, 1/2"NC	
14	604641	1	1	U-BOLT, towing	
15	912251	2	2	NUT, jam, 1-1/4"NF	
16	913097	2	2	NUT, 1-1/4"NF	
17	904210	2	2	LOCKWASHER, 1-1/4"	
18	604635	1	1	ANGLE, transmission supporting	
19	013238	4	4	CAPSCREW, 3/4"NC x 2"	
20	911030	4	4	NUT, hex, 3/4"NC	
	904369	4	4	LOCKWASHER, 3/4"	
21	604181	1	1	BRACKET, transmission supporting	
22	604637	2	2	CAPSCREW (hex head, drilled end, 3/4"NF x 2")	
23	912331	2	2	NUT, slotted, 3/4"NF	
	900807	2	2	PIN, cotter, 1/8" x 1-1/4"	
24	900820	2	2	WASHER, plain, U.S. Std., 3/4"	
25	604636	1	1	PIN, transmission supporting bracket	
26	901344	2	2	PIN, cotter, 1/4" x 2"	
27	604192	1	1	BRACKET, towing	
28	912075	4	4	CAPSCREW, 5/8"NC x 5"	
	903793	4	4	CAPSCREW, 5/8"NC x 2" (For use with special rear bumper only)	
29	911029	4	4	NUT, 5/8"NC	
30	904209	4	4	LOCKWASHER, 5/8"	
31	604642	1	1	DOOR, battery compartment	
32	910388	3	3	BOLT, carriage, 1/4"NC x 3/4" (Includes square NUT)	
	904204	3	3	LOCKWASHER, 1/4"	
33	604651	2	2	ROD, locking, battery compartment door	
34	900942	2	2	PIN, cotter, 3/32" x 5/8"	
35	912484	1	1	PADLOCK with KEYS	
36	604617	2	2	CUSHION, fuel tank (19" long)(Used on graders prior to #3314)	
	068199	2	2	CUSHION, fuel tank (18" long) } Use on graders #3314 and up	
	068190	4	4	CUSHION, fuel tank (2" long) } Use on graders #3314 and up	
	914768	16	16	RIVET, split, steel, oval head, 7/32" x 1/2" (8 req'd on graders prior to #3314)	

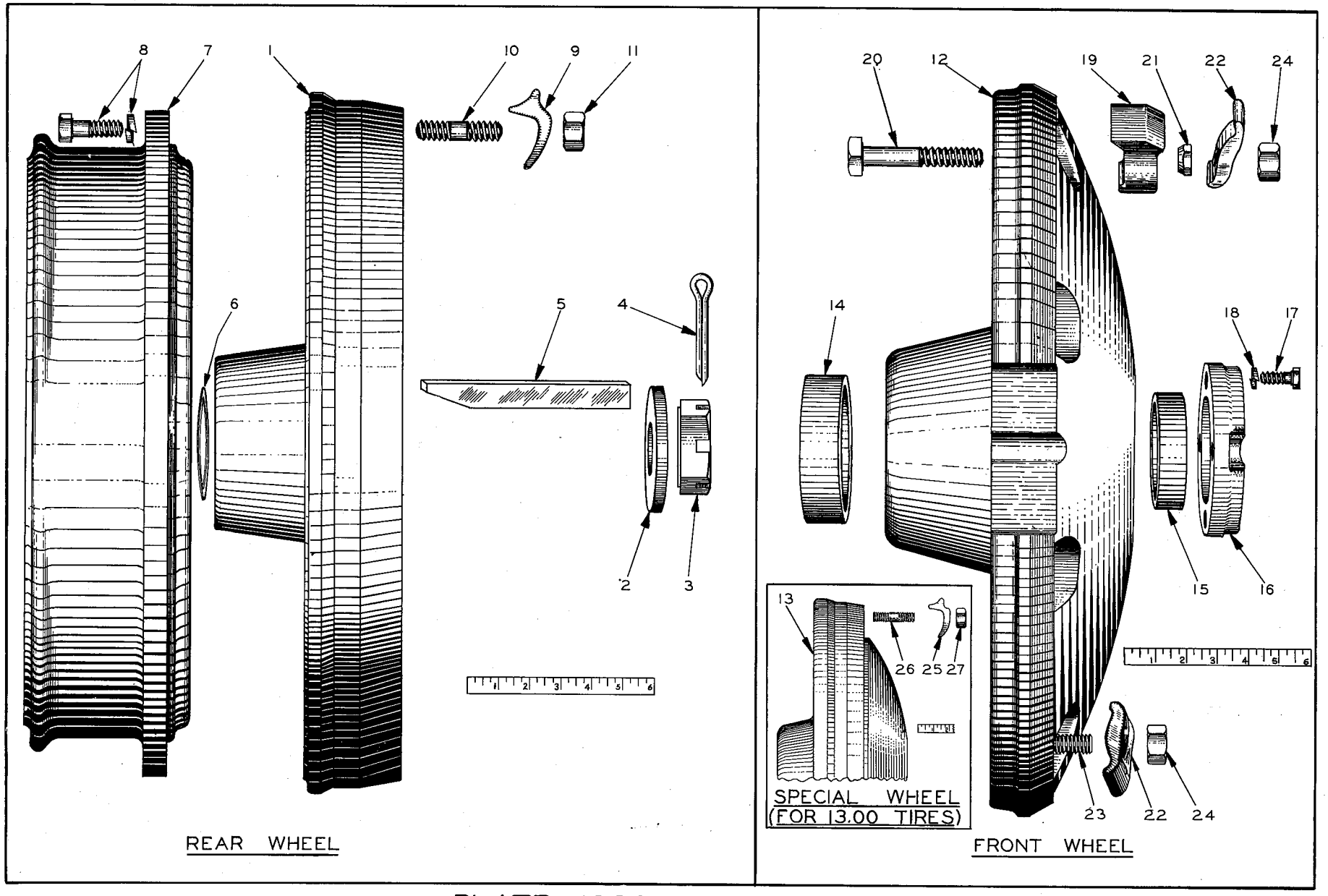

PLATE 1326A——WHEELS

REAR WHEELS
(See Plate 1326A)

ITEM	PART NUMBER	QUANTITY AD3	QUANTITY AD4	DESCRIPTION	KIT NUMBER
1	605088	2	-	WHEEL, tandem (Keywayed bore, machined for brake drum) (Used on graders prior to #328).	
	075666	4	4	WHEEL, tandem (tapered & keywayed)(Used f/Spec. Service to replace splined wheels on grader w/Electric Brakes.	076097, 075768
	605196	2	-	WHEEL, tandem (Keywayed bore. Not machined for brake drum)(Used on graders prior to #328)	
	605642	2	2	*WHEEL, tandem (Splined bore. Machined for brake drum) (Used on graders #328 and up)	
	605919	2	2	WHEEL, tandem (Splined bore. Not machined for brake drum)(Used on graders after #327. Replaced by WHEEL 605642 on graders with 4-wheel brakes)	
2	604491	4	-	WASHER, plain (Graders prior to #328)	
	605918	4	4	WASHER, plain (Graders #328 and up)	
3	060670	4	4	NUT (hex, jam, slotted, 1-3/4"NF)	
4	911446	4	4	PIN, cotter, 3/8" x 2-3/4"	
5	063822	4	-	KEY, tandem wheels (Used on graders prior to #328)	
	066986	4	4	KEY, tandem wheels (f/use w/Spec. Ser. wheel 075666 only)	07609[illegible], 076[illegible]
6	054876	2	2	*SHIM, wheel brake adjustment (Use as req'd)	
7	605089	2	-	DRUM, brake (Used on graders prior to #328)	
	605643	2	2	*DRUM, brake (Used on graders #328 and up)	
8	036707	16	-	CAPSCREW, 5/8"NC x 1-3/4" } Graders prior to #328	
	904209	16	-	LOCKWASHER, 5/8" } Graders prior to #328	
	903639	16	16	*CAPSCREW, 1/2"NC x 1-1/2" } Graders #328 and up	
	904208	16	16	*LOCKWASHER, 1/2" } Graders #328 and up	
9	603489	32	32	CLAMP, rear wheel rim	
10	603488	32	32	STUD (5/8"NC x 2-5/8")	
11	601405	32	32	NUT (hex, 5/8"NC)	

*Graders equipped with 4-wheel brakes use double the quantities indicated.

FRONT WHEELS
(See Plate 1326A)

12	065414	2	2	WHEEL, front (Standard. For use with 7.50, 9.00 or 10.00 tires)
13	056069	2	2	WHEEL, front (Special. For use with 13.00 or 14.00 tires)
14	211581	2	2	CUP, front wheel inner bearing
15	211567	2	2	CUP, front wheel outer bearing
16	604226	2	2	CAP, front wheel hub
17	903630	8	8	CAPSCREW, 3/8"NC x 1"
18	904204	8	8	LOCKWASHER, 3/8"
19	605208	16	16	ADAPTER, tire rim (Used with 10.00 TIRES only)
20	912128	16	16	BOLT, machine, sq-hd., 5/8"NC x 3-3/4"
21	605294	16	16	NUT (hex, thin, 5/8"NC)
22	604361	16	16	CLAMP, front wheel rim (Used with 7.50, 9.00 or 10.00 TIRES only)
23	912181	16	16	BOLT, machine, sq-hd., 5/8"NC x 2-3/4" (Used with 7.50 or 9.00 TIRES only)
24	601405	16	16	NUT (hex, 5/8"NC)
25	603489	16	16	CLAMP, front wheel rim (Used with 13.00 and 14.00 TIRES only)
26	603488	16	16	STUD (5/8"NC x 2-5/8")
27	601405	16	16	NUT (hex, 5/8"NC)

TIRES, TUBES AND RIMS
(Not Illustrated)

NOTE: Order from local Tire Dealer. Tire equipment listed below is optional.

ITEM	PART NUMBER	QUANTITY AD3	QUANTITY AD4	DESCRIPTION	KIT NUMBER
				REAR WHEELS	
1	------	4	4	RIM, pneumatic tire, semi-drop center, 24 x 8 (Goodyear No. 154D or Firestone No. 88RIT-8)	
2	------	4	4	TIRE, pneumatic road grader, 13.00-24", 8 ply rating	
	------	4	4	TIRE, pneumatic road grader, 14.00-24", 10 ply rating	
3	------	4	4	TUBE, pneumatic tire, 13.00-24" or 14.00-24" with TR-215 or TR-217 valve	
				FRONT WHEELS	
4	------	2	2	RIM, pneumatic tire, 24 x 7 (Goodyear No. 424 or Firestone No. 17R1-4)(Used with 7.50 or 9.00 tires)	
	------	2	-	RIM, pneumatic tire, 24 x 8 (Goodyear No. 444 or Firestone No. 19R-1)(Used with 10.00 tire)	
	------	2	2	RIM, pneumatic tire, semi-drop center, 24 x 8 (Goodyear No. 154D or Firestone No. 88RIT-8)(Used with 13.00 or 14.00 tire)	
5	------	2	-	TIRE, pneumatic road grader, ribbed tread, 7.50-24", 10 ply rating	
	------	2	2	TIRE, pneumatic road grader, ribbed tread, 9.00-24", 10 ply rating	
	------	2	-	TIRE, pneumatic road grader, ribbed tread, 10.00-24", 12 ply rating	
	------	2	2	TIRE, pneumatic road grader, 13.00-24", 8 ply rating	
	------	2	2	TIRE, pneumatic road grader, 14.00-24", 10 ply rating	
6	------	2	-	TUBE, pneumatic tire, 7.50-24", with TR-215 or TR-217 valve	
	------	2	2	TUBE, pneumatic tire, 9.00-24", with TR-215 or TR-217 valve	
	------	2	-	TUBE, pneumatic tire, 10.00-24", with TR-215 or TR-217 valve	
	------	2	2	TUBE, pneumatic tire, 13.00-24" or 14.00-24",with TR-215 or TR-217 valve	

PAINTING AND MARKING
(Not Illustrated)

NOTE: All transfers listed below are English language printings unless otherwise indicated.

1	055583	1	-	TRANSFER, grader check and lubrication guide (8-1/2" x 10-1/4")(Applied to seat front)	061489
2	061136	-	1	TRANSFER, grader check and lubrication guide (9-1/2" x 10-1/4")(Applied to seat front)	065037
3	060594	1	1	TRANSFER, scarifier check and lubrication guide (3" x 6-1/2") (Applies to scarifier lift support)	
4	042513	1	1	TRANSFER, caution, fan lubrication (1" x 1-3/4")(Applied to fan pulley)	061489 065037
5	053591	2	-	TRANSFER, identification, "MODEL AD3" (6" x 8-3/4") (Applied to sides of seat)	061489

(Continued)

ITEM	PART NUMBER	QUANTITY AD3	QUANTITY AD4	DESCRIPTION	KIT NUMBER
6	061210	-	2	TRANSFER, identification, "MODEL AD4" (6" x 8-3/4") (Applied to sides of seat)	065037
7	050842	1	1	TRANSFER, instruction, air cleaner (1-1/2" x 3-3/4") (Applied to air cleaner)	061489 065037
	074578	1	1	*TRANSFER, instruction, air cleaner (Spanish translation, 1-5/8" x 4")(Applied to air cleaner)	
8	050838	1	1	TRANSFER, instruction, air pre-cleaner (Applied to air pre-cleaner)	061489 065037
	074577	1	1	*TRANSFER, instruction, air pre-cleaner (Spanish translation, 1-5/8" x 4")(Applied to air pre-cleaner)	
9	053624	1	1	TRANSFER, instruction, air heater operation (2" x 6") (Applied to right side of seat)	
	074579	1	1	*TRANSFER, instruction, air heater operation (Spanish translation, 2" x 6")(Applied to right side of seat)	
10	066051	1	1	TRANSFER, instruction, primer operation (1-3/4" x 6") (Applied to right side of seat)	061489 065037
11	060611	2	2	TRANSFER, instruction, fuel filter (1-7/16" x 4")(Applied to old or new type filters)	061489, 065037
	074735	1	1	TRANSFER, inst., fuel filter (2-1/4" x 3")(Applied to fuel filter assy. 065590 only)	
	074581	2	2	*TRANSFER, instruction, fuel filter (Spanish translation, 1-7/16" x 4")(Applied to fuel filter)	
	074738	1	1	TRANSFER, inst., fuel filter (2-1/4" x 3")(Applied to fuel filter assy. 065596 only).	
12	074729	1	1	*TRANSFER, instruction, oil filter (2-1/4" x 2-1/2")(Applied to oil filter)	061489, 065037
	074582	1	1	*TRANSFER, instruction, oil filter (Spanish translation, 1-1/8" x 4")(Applied to engine oil filter)	
13	060769	1	-	TRANSFER, instruction, tire pump (2-1/4" x 3")(Applied to right side of dash)	
14	061946	1	1	TRANSFER, multi-language warning, special LUBERFINER oil filter (4-1/8" x 10")(Applied to oil filter)	
15	040851	2	2	*TRANSFER, name, "ALLIS-CHALMERS" (2-1/2" x 19") (Applied to sides of frame)	061489 065037
16	068831	3	3	*TRANSFER, name, "ALLIS-CHALMERS" (3" x 23")(Applied to sides of hood and to battery compartment door)	061489 065037
17	073357	2	2	*TRANSFER, marking "ROLL-AWAY MOLDBOARD" (5-1/2" diam.)(Applied to moldboard)	
18	914932	-	-	ENAMEL, persian orange, quart can (For spraying)	
	914966	-	-	ENAMEL, persian orange, gallon can (For spraying)	
				NOTE: Approximately 4 gallons of spraying enamel and 1/3 gallon of thinner are required to paint grader one coat	
19	914933	-	-	ENAMEL, persian orange, quart can (For brushing)	
	914967	-	-	ENAMEL, persian orange, gallon can (For brushing)	
20	915884	-	-	ENAMEL, persian orange, 12 oz. pressurized spray-type can (For touch-up)	
21	067937	-	-	CEMENT, transfer applieation, 1/2 pint jar (Makes solution by adding 4 parts water. Required to apply transfers indicated by asterisk (*) above)	
22	------	-	-	MONOGRAM, "A-C" (See RADIATOR SHELL AND HOOD)	

*Indicates permanent type transfer. See item 21

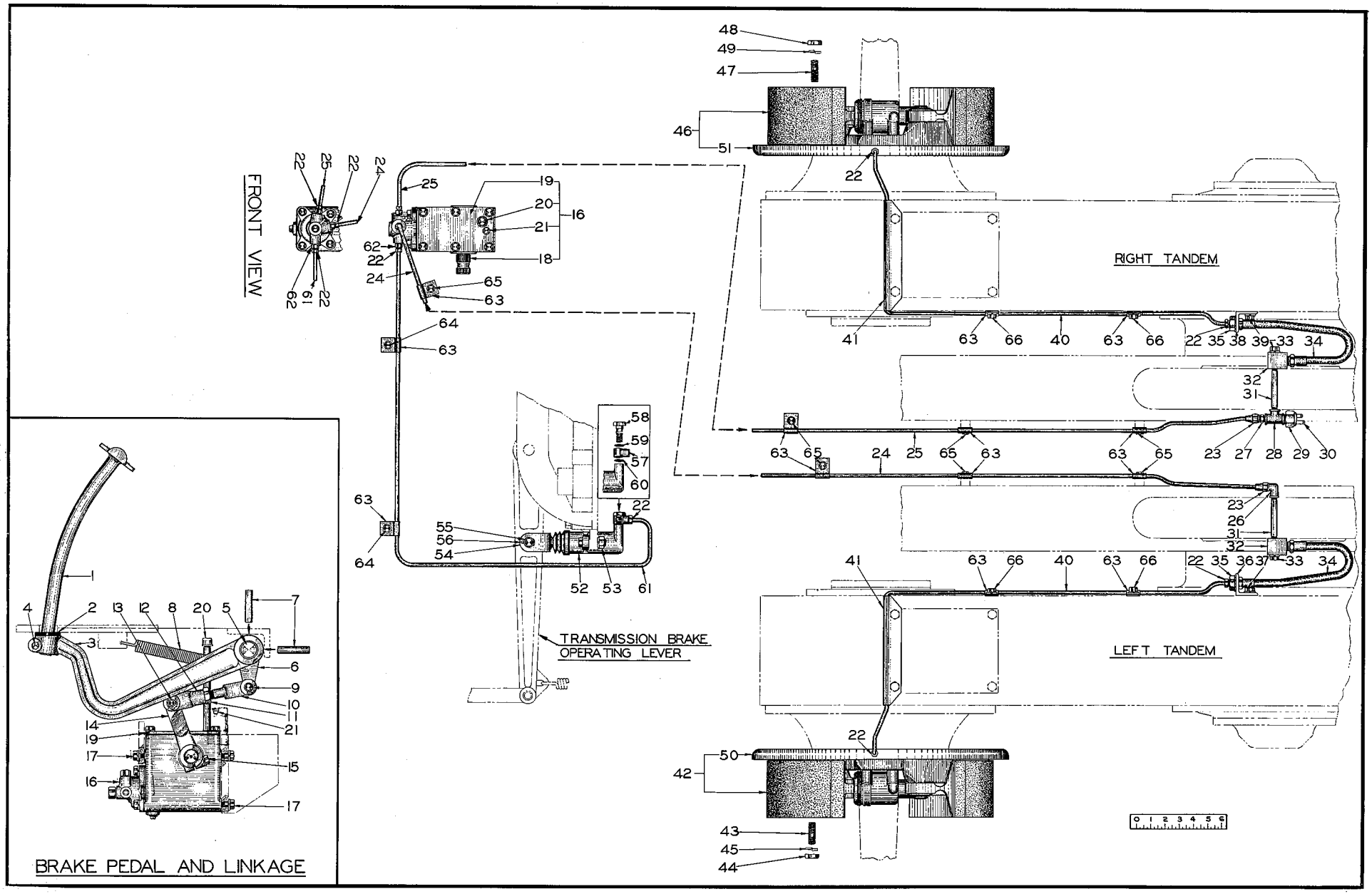

PLATE 1387A-HYDRAULIC BRAKE SYSTEM (EARLY AD3)

HYDRAULIC BRAKE SYSTEM
(See Plate 1387A)

USAGE: Model AD3 Graders prior to serial No. 328

ITEM	PART NUMBER	QTY.	DESCRIPTION	KIT NUMBER
1	604753	1	PEDAL, brake	
2	604756	1	BUMPER, brake pedal arm (rubber)	
3	604231	1	ARM, brake pedal	
4	903639	1	CAPSCREW, 1/2"NC x 1-1/2"	
	904208	1	LOCKWASHER, 1/2"	
5	604748	1	SHAFT, brake pedal	
6	604749	1	LEVER, brake shaft	
7	604752	2	PIN, brake pedal arm and lever (1/2" x 2-1/4")	
8	604757	1	SPRING, pedal retracting	
9	033075	1	PIN, brake yoke	
	900806	1	PIN, cotter, 1/8" x 1"	
10	604758	1	YOKE (male)	
11	911036	1	NUT, jam, 5/8"NC	
12	600665	1	YOKE (female)	
13	604759	1	PIN, brake yoke	
	900806	1	PIN, cotter, 1/8" x 1"	
14	605194	1	ARM, hydraulic compensator	
15	U-3188	1	CAPSCREW, 3/8"NF x 1-1/2"	
	904206	1	LOCKWASHER, 3/8"	
16	605436	1	COMPENSATOR ASSEMBLY, hydraulic (Consists of items 18 thru 21)	
17	035439	7	CAPSCREW, 3/8"NC x 1"	
	904206	7	LOCKWASHER, 3/8"	
18	605434	1	COMPENSATOR ASSEMBLY, hydraulic (Available only as part of item 16. See page 147 for repair parts)	
19	605437	1	COVER, hydraulic compensator	
20	901751	1	CAP, pipe, 1/4"NPT	
21	605132	1	VENT, air, hydraulic compensator	
22	913536	8	NUT, inverted flare, 1/4" tube	
23	910136	2	NUT, flared, long, 1/4" tube	
24	604762	1	TUBE, compensator to left brake (copper, 1/4"O. D. x 86" long)	
25	604761	1	TUBE, compensator to right brake (copper, 1/4"O. D. x 55" long)	
26	913475	1	ELBOW, female, flared, 1/4" tube, 1/8"NPT	
27	910141	1	CONNECTOR, male, flared, 1/4" tube, 1/8"NPT	
28	901702	1	TEE, pipe, 1/8"NPT	
29	605052	1	SWITCH, hydraulic, stop light	
30	900547	2	SCREW, machine, #6-32 x 3/8"	
	906963	2	LOCKWASHER, #6	
31	901473	2	NIPPLE, pipe, 1/8" x 4"	
32	604765	2	BLOCK, hose connecting	
33	053616	4	CAPSCREW, 3/8"NC x 1-3/4"	
	904206	4	LOCKWASHER, 3/8"	

(Continued)

ITEM	PART NUMBER	QTY.	DESCRIPTION	KIT NUMBER
34	600675	2	HOSE (16" long)	
35	911049	2	NUT, jam, 5/8"NF	
	910543	2	LOCKWASHER, external teeth, 5/8"	
36	604767	1	CLIP, angle, left brake hose	
37	903628	1	CAPSCREW, 3/8"NC x 5/8"	
	904206	1	LOCKWASHER, 3/8"	
38	604766	1	CLIP, angle, right brake hose	
39	903628	1	CAPSCREW, 3/8"NC x 5/8"	
	904206	1	LOCKWASHER, 3/8"	
40	604768	2	TUBE, brake (copper, 1/4"O. D. x 40" long)	
41	604769	2	SHIELD, brake tube	
42	605110	1	BRAKE ASSEMBLY, left wheel (Includes item 50)(See page 149 for repair parts)	
43	605099	10	STUD (1/2"NC x 1-1/2")	
44	911035	10	NUT, jam, 1/2"NC	
45	904208	10	LOCKWASHER, 1/2"	
46	605111	1	BRAKE ASSEMBLY, right wheel (Includes item 51)(See page 149 for repair parts)	
47	605099	10	STUD (1/2"NC x 1-1/2")	
48	911035	10	NUT, jam, 1/2"NC	
49	904208	10	LOCKWASHER, 1/2"	
50	605352	1	PLATE, back, left brake	
51	605351	1	PLATE, back, right brake	
52	604883	1	CYLINDER ASSEMBLY, transmission brake (See page 151 for repair parts)	
53	070960	2	CAPSCREW, 3/8"NC x 1-1/2"	
	911026	2	NUT, 3/8"NC	
	904206	2	LOCKWASHER, 3/8"	
54	604884	1	YOKE, transmission brake operating cylinder	
55	604886	1	PIN, transmission brake yoke	
56	911440	2	PIN, cotter, 3/16" x 1-1/8"	
57	605453	1	FITTING, transmission brake cylinder	
58	605452	1	BOLT	
59	605451	1	GASKET (copper, .537"I. D.)	
60	605450	1	GASKET, transmission brake cylinder connection (copper)	
61	604950	1	TUBE, transmission brake cylinder (copper, 1/4"O. D. x 39-1/2")	
62	913535	1	CONNECTOR, male, inverted flare, 1/4" tube, 1/8"NPT	
63	AM-8691	14	CLIP, brake tubes (single, closed type, 1/4" diam., 13/32"bolt hole)	
64	905657	2	CAPSCREW, 1/4"NC x 1"	
	911024	2	NUT, 1/4"NC	
	904204	2	LOCKWASHER, 1/4"	
	900816	2	WASHER, plain, U. S. std., 1/4"	
65	905665	8	CAPSCREW, 1/4"NC x 1/2"	
	900816	8	WASHER, plain, U. S. std., 1/4"	
66	903628	4	CAPSCREW, 3/8"NC x 5/8"	
	904206	4	LOCKWASHER, 3/8"	

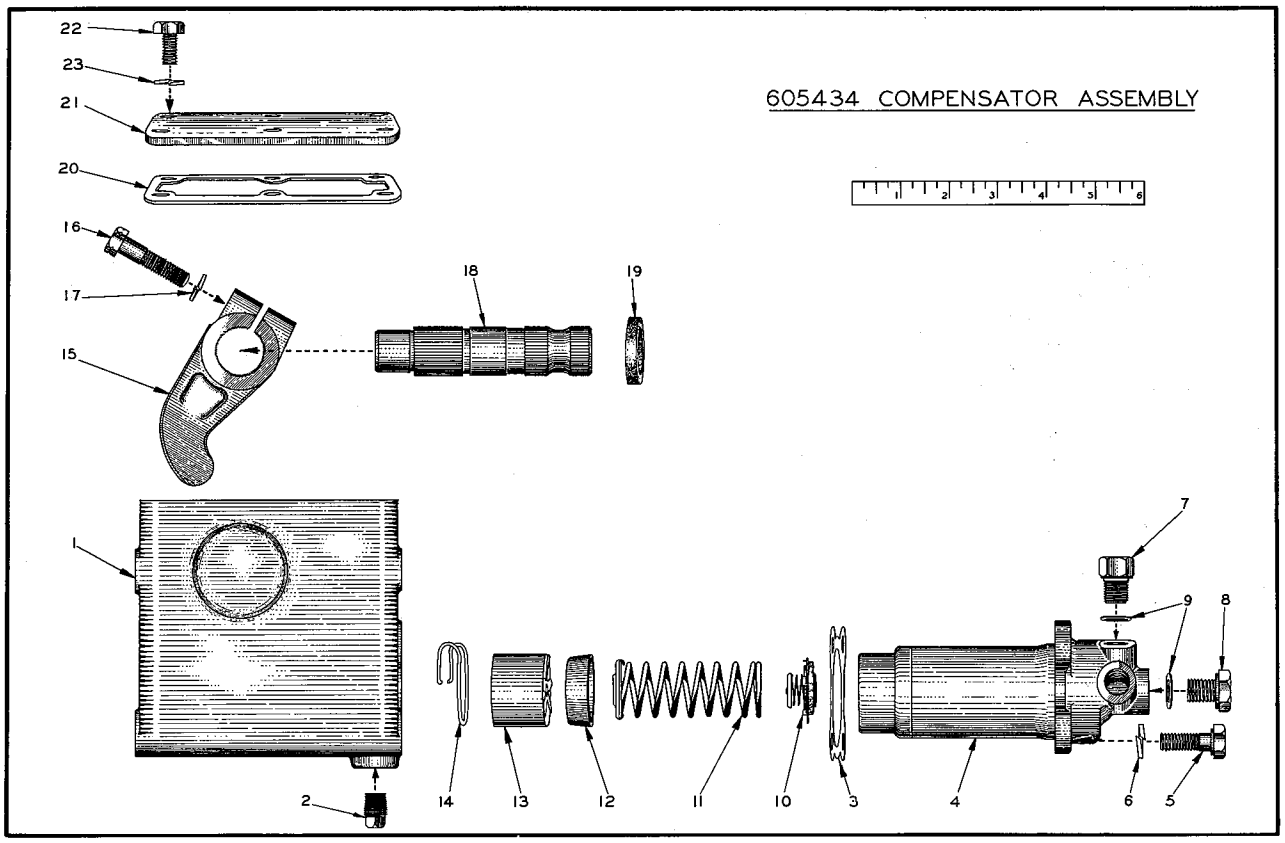

PLATE 1369A–HYDRAULIC BRAKE COMPENSATOR PARTS

HYDRAULIC BRAKE COMPENSATOR 605434
(See Plate 1369A)

USAGE: Model AD3 Graders prior to serial No. 328. See page 145 for listing of complete Compensator Assembly.

ITEM	WAGNER ELECTRIC PART NO.	QTY.	DESCRIPTION	KIT NUMBER
			NOTE: Order all parts from nearest WAGNER ELECTRIC COMPANY service staion.	
1	FD-2795	1	TANK	
2	FC-621	1	PLUG, drain	
3	FC-607	1	GASKET, head to tank	
4	FE-343	1	HEAD AND BARREL	
5	------	4	CAPSCREW, hex head, 3/8"NC x 1" (Allis-Chalmers No. 035439)	
6	------	4	LOCKWASHER, 3/8" (Allis-Chalmers No. 904206)	
7	FC-2832	2	FITTING, outlet	
8	FC-996	1	PLUG, head	
9	FC-17	3	GASKET, head plug	
10	FC-1266	1	VALVE ASSEMBLY (Serviced only as a unit)	
11	FC-1829	1	SPRING ASSEMBLY, piston return (1 SPRING, 1 WASHER)	
12	FD-962	1	CUP, piston	
13	FC-643	1	PISTON ASSEMBLY (Includes VALVE)	
14	FC-732	1	WIRE, piston stop	

(Continued)

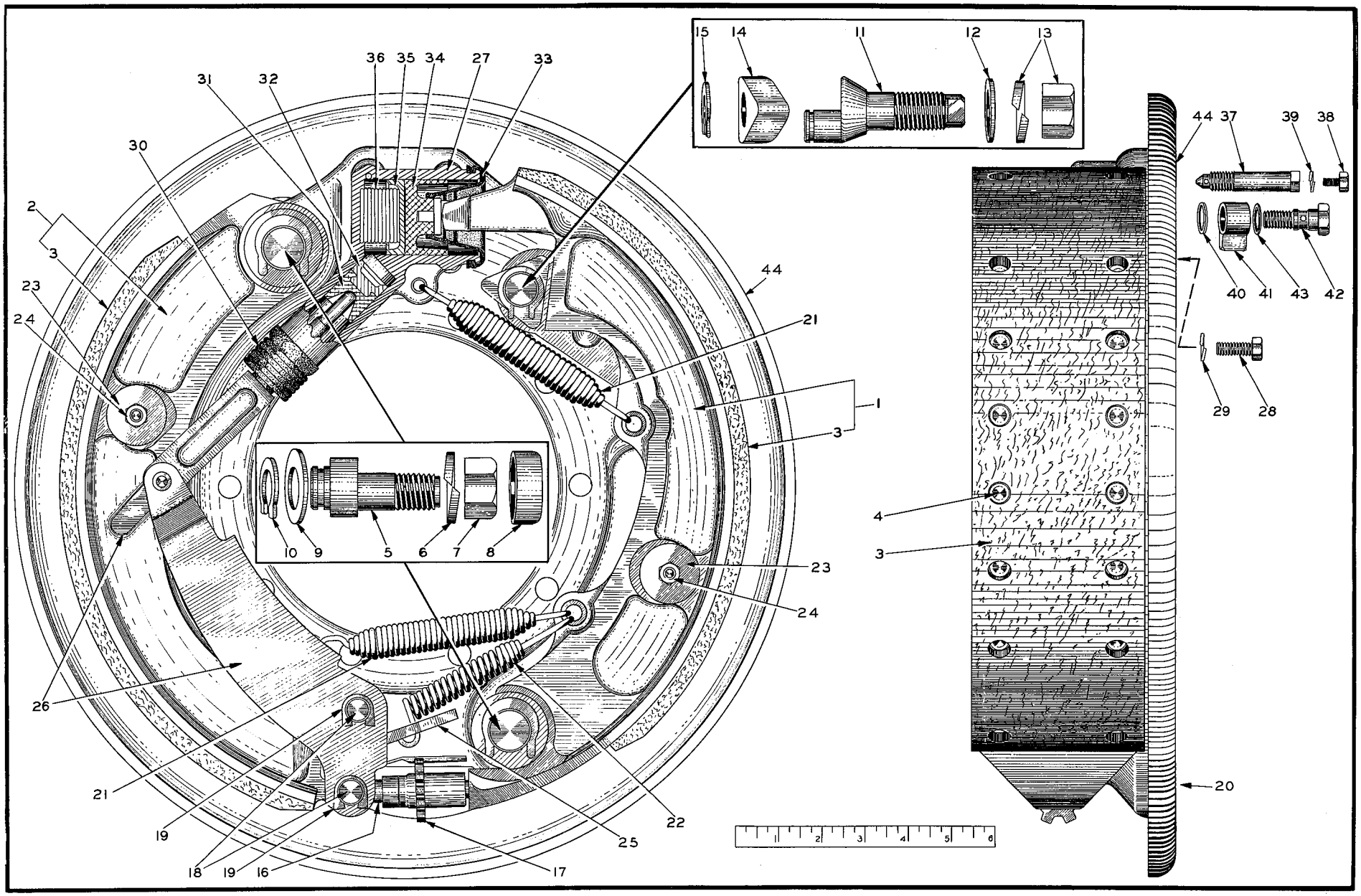

PLATE 1367A—HYDRAULIC BRAKE PARTS

HYDRAULIC BRAKE COMPENSATOR 605434 (Cont'd)

ITEM	WAGNER ELECTRIC PART NO.	QTY.	DESCRIPTION	KIT NUMBER
15	FD-1394	1	LEVER	
16	FC-1918	1	BOLT	
17	FC-1919	1	LOCKWASHER	
18	FD-459	1	SHAFT	
19	FD-273	1	SEAL, oil, lever shaft	
20	FD-354	1	GASKET, cover	
21	FC-8366	1	COVER (For shipping only. Replaced by COVER 605437 when installed)	
22	------	6	CAPSCREW, 5/16"NC x 5/8" (Allis-Chalmers No. 905661)	
23	------	6	LOCKWASHER, 5/16" (Allis-Chalmers No. 904205)	

HYDRAULIC BRAKE PARTS
(See Plate 1367A)

605110 BRAKE ASSEMBLY - LEFT
605111 BRAKE ASSEMBLY - RIGHT
} Model AD3 Graders prior to #328 only

ITEM	WAGNER ELECTRIC PART NO.	QUANTITY 605110	QUANTITY 605111	DESCRIPTION	KIT NUMBER
				NOTE: Order all parts from nearest WAGNER ELECTRIC COMPANY service station.	
1	FD-6580	1	1	SHOE ASSEMBLY - front (Includes items 3 and 4)	
2	FD-6560	1	1	SHOE ASSEMBLY - rear (Includes items 3 and 4)	
3	FC-9054	2	2	LINING, brake shoe	
4	FC-1470	32	32	RIVET	
5	FC-6917	2	2	PIN, anchor, brake shoe	
6	-------	2	2	NUT, 7/8"NF (Allis-Chalmers No. 911046)	
7	-------	2	2	LOCKWASHER, 7/8" (Allis-Chalmers No. 905347)	
8	FC-6922	2	2	COVER, brake shoe anchor pin nut	
9	FC-6802	2	2	WASHER, brake shoe anchor pin (plain)	
10	FC-779	2	2	WASHER, brake shoe anchor pin (C-type)	
11	FC-7618	1	1	PIN, stop, brake shoe return	
12	FC-6905	1	1	WASHER, plain	
13	-------	1	1	NUT, 7/8"NF (Allis-Chalmers No. 911046)	
	-------	1	1	LOCKWASHER, 7/8" (Allis-Chalmers No. 905347)	
14	FC-7617	1	1	SWIVEL, brake shoe return stop pin	
15	FC-718	1	1	WASHER, brake shoe return stop pin (C-type)	
16	FC-7572	1	-	SCREW ASSEMBLY, adjusting (Includes SPRING)	
	FC-7573	-	1	SCREW ASSEMBLY, adjusting (Includes SPRING)	
17	FC-7289	1	-	NUT, adjusting	
	FC-7290	-	1	NUT, adjusting	
18	FC-6908	2	2	PIN, brake shoe lever	
19	FC-6794	2	2	WASHER, brake shoe lever pin (C-type)	
20	FC-6797	1	1	COVER, brake adjustment hole (Not illustrated)	

(Continued)

HYDRAULIC BRAKE PARTS (Cont'd)
(See Plate 1367A)

ITEM	WAGNER ELECTRIC PART NO.	QUANTITY 605110	QUANTITY 605111	DESCRIPTION	KIT NUMBER
21	FC-6906	2	2	SPRING, brake shoe retracting	
22	FC-6919	1	1	SPRING, brake shoe retracting - lower	
23	FC-6783	2	2	WASHER, guide, brake shoe	
24	-------	2	2	BOLT, carriage, 1/4"NF x 1-5/8"	
	-------	2	2	NUT, 1/4"NF (Allis-Chalmers No. 911040)	
	-------	2	2	NUT, jam, 1/4"NF (Allis-Chalmers No. 910267)	
25	FC-6920	1	1	GUIDE, brake shoe (Riveted to back plate)	
26	FC-6907	1	1	LEVER ASSEMBLY, brake shoe (Includes push ROD)	
27	FE-1284	1	-	CASTING, brake cylinder	
	FE-1285	-	1	CASTING, brake cylinder	
28	-------	2	2	CAPSCREW, 3/8"NC x 3/4" (Allis-Chalmers No. 035244)	
29	-------	2	2	LOCKWASHER, 3/8" (Allis-Chalmers No. 904206)	
30	FC-6766	1	1	BOOT, brake cylinder - rear	
31	FC-6911	1	1	PISTON, brake cylinder - rear	
32	FC-2422	1	1	CUP, brake cylinder rear piston	
33	FC-6915	1	1	BOOT, brake cylinder - front	
34	FC-6912	1	1	PISTON, brake cylinder - front	
35	FC-966	1	1	CUP, brake cylinder front piston	
36	FC-965	1	1	SPRING, brake cylinder front piston	
37	FC-1587	1	1	SCREW, bleeding, brake cylinder	
38	-------	1	1	CAPSCREW, 1/4"NF x 3/8"	
39	-------	1	1	LOCKWASHER, 1/4" (Allis-Chalmers No. 904204)	
40	FC-1243	1	1	GASKET, brake cylinder inlet fitting (Allis-Chalmers No. 605450)	
41	FC-2579	1	1	FITTING, brake cylinder inlet (Allis-Chalmers No. 605453)	
42	FC-1241	1	1	BOLT (Allis-Chalmers No. 605452)	
43	FC-1242	1	1	GASKET (Allis-Chalmers No. 605451)	
44	-------	1	1	PLATE, back (See HYDRAULIC BRAKE SYSTEM)	

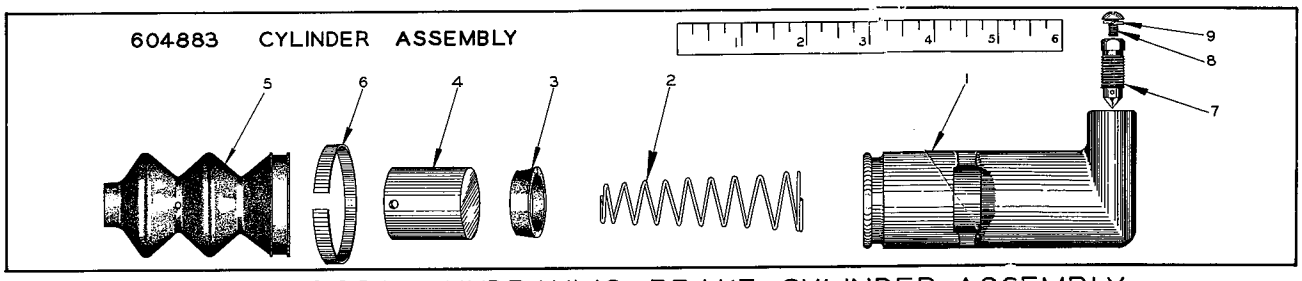

PLATE 1368A—HYDRAULIC BRAKE CYLINDER ASSEMBLY

HYDRAULIC BRAKE CYLINDER 604883
(See Plate 1368A)

USAGE: Model AD3 Graders prior to serial No. 328. See page 146 for listing of complete Cylinder Assembly.

ITEM	WAGNER ELECTRIC PART NO.	QTY.	DESCRIPTION	KIT NUMBER
			NOTE: Order all parts from nearest WAGNER ELECTRIC COMPANY service station.	
1	FC-4170	1	CASTING, cylinder	
2	FC-4167	1	SPRING	
3	FC-4168	1	CUP (rubber)	
4	FC-4166	1	PISTON	
5	FC-4169	1	BOOT, protecting	
6	FC-2931	1	STRAP, boot retaining	
7	FC-2933	1	SCREW, bleeding	
8	--------	1	SCREW, machine, #10-32NF x 1/4" (Allis-Chalmers No. 903753)	
9	--------	1	LOCKWASHER, #10 (Allis-Chalmers No. 910243)	

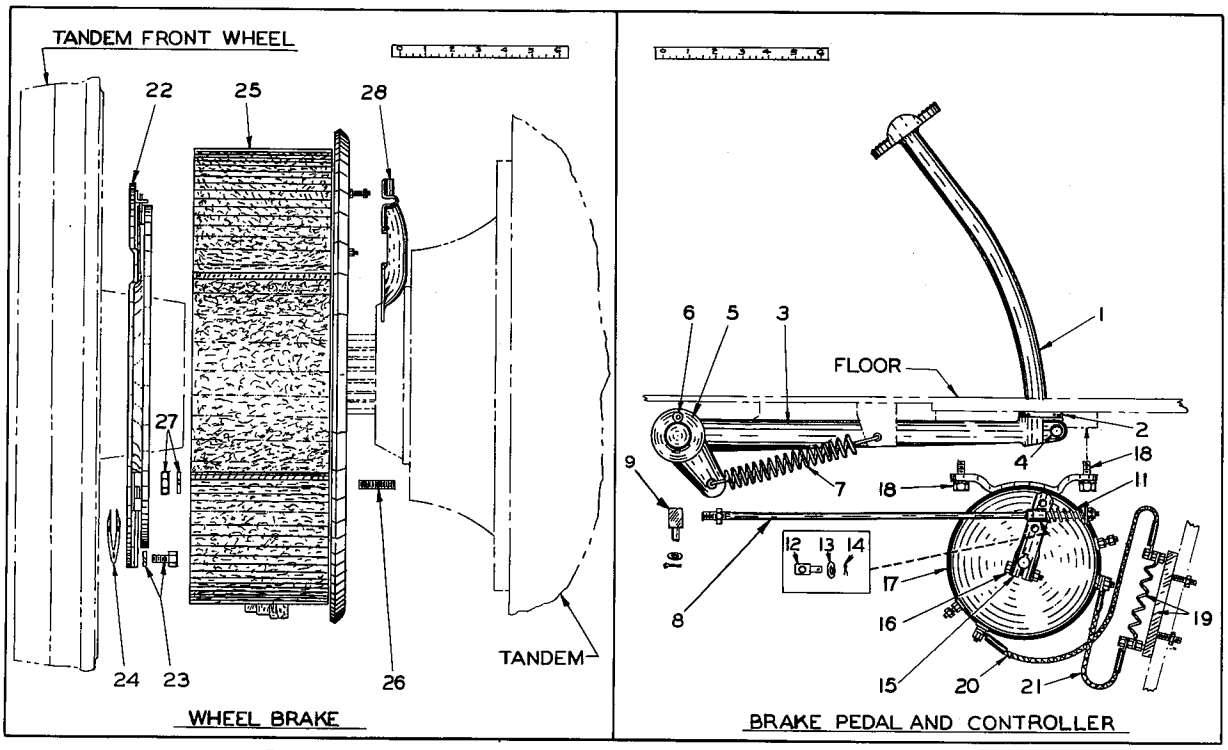

PLATE 1358B - ELECTRIC BRAKE SYSTEM

ELECTRIC BRAKE SYSTEM
(See Plate 1358B)

USAGE: Model AD4 Graders, and Model AD3 Graders serial No. 328 and up.

ITEM	PART NUMBER	QUANTITY AD3	QUANTITY AD4	DESCRIPTION	KIT NUMBER
1	605795	1	1	PEDAL, brake	
2	605785	1	1	BUMPER, brake pedal arm	
3	051867	1	1	ARM, brake pedal	
4	910245	1	1	CAPSCREW, 3/8"NC x 1-3/8"	
	904206	1	1	LOCKWASHER, 3/8"	
5	911159	1	1	WASHER, plain, SAE std., 1"	
6	900811	1	1	PIN, cotter, 3/16" x 1-1/2"	
7	051193	1	1	SPRING, brake pedal retracting	
8	064485	1	1	ROD, brake pedal to controller (When required for graders prior to #2130 also order item 9 and 1 NUT 911040)	
	911040	1	1	NUT, 1/4"NF (Graders #2130 and up)	
	911114	1	1	WASHER, plain, SAE std., 1/4"	
	911052	1	1	NUT, castle, 1/4"NF	
	900800	1	1	PIN, cotter, 1/16" x 3/4"	
	033068	1	1	PIN, brake control rod (Graders prior to #2130)	
	900970	1	1	PIN, cotter, 1/16" x 1/2"	
9	064487	1	1	SWIVEL, brake pedal arm (Graders #2130 and up)	
	911114	1	1	WASHER, plain, SAE std., 1/4"	
	900970	1	1	PIN, cotter, 1/16" x 1/2"	
11	605812	1	1	SPRING, brake controller rod	
12	051037	1	1	SWIVEL, brake controller lever	
13	911114	1	1	WASHER, plain, SAE std., 1/4"	
14	900970	1	1	PIN, cotter, 1/16" x 1/2"	

(Continued)

ELECTRIC BRAKE SYSTEM (Cont'd)

ITEM	PART NUMBER	QUANTITY AD3	QUANTITY AD4	DESCRIPTION	KIT NUMBER
15	053270	1	1	LEVER, brake controller	
16	912177	1	1	CAPSCREW, 1/4"NF x 1-1/4"	
	911040	1	1	NUT, hex, 1/4"NF	
	904204	1	1	LOCKWASHER, 1/4"	
17	605816	1	1	CONTROLLER ASSEMBLY, electric brake (See page 156 for repair parts)	
18	903630	2	2	CAPSCREW, 3/8"NC x 1"	
	904206	2	2	LOCKWASHER, 3/8"	
19	051239	1	1	RESISTOR ASSEMBLY (Standard. For graders equipped with 2-wheel brakes)(Serviced only as a unit)	
	056765	1	1	RESISTOR ASSEMBLY (Special. For graders equipped with 4-wheel brakes)(Serviced only as a unit)	
20	605808	1	1	CABLE, controller to resistor (10" long)	
21	605807	1	1	CABLE, controller to resistor (5" long)	
22	605817	1	1	*ARMATURE, electric brake - right wheel	
	605818	1	1	*ARMATURE, electric brake - left wheel	
23	034964	18	18	*CAPSCREW, 1/4"NC x 3/4"	
	904204	18	18	*LOCKWASHER, 1/4"	
24	054900	6	6	*SHIM, adjusting, brake armature (1/32" thick)(Use as req'd)	
25	056640	2	2	*BRAKE ASSEMBLY (See page 155 for repair parts)	
26	054882	20	20	*STUD (1/2"NC x 2-1/8")	
27	911028	20	20	*NUT, 1/2"NC	
	904208	20	20	*LOCKWASHER, 1/2"	
28	053434	2	2	*COVER, brake cable terminal	
29	056764	2	2	WIRING HARNESS, tandem front wheel brake to rear wheel brake (2 cables, 95" long. Not illustrated)(Special. For graders equipped with 4-wheel brakes)	
30	207091	4	4	CLIP, tandem rear wheel brake wiring harness (single, closed type, 1/2" diam., 13/32" bolt hole. Not illustrated)(Special. Used only on graders equipped with 4-wheel brakes)	
31	903628	4	4	CAPSCREW, 3/8"NC x 5/8"	
	904206	4	4	LOCKWASHER, 3/8"	

*Graders equipped with 4-wheel brakes use double the quantities indicated.

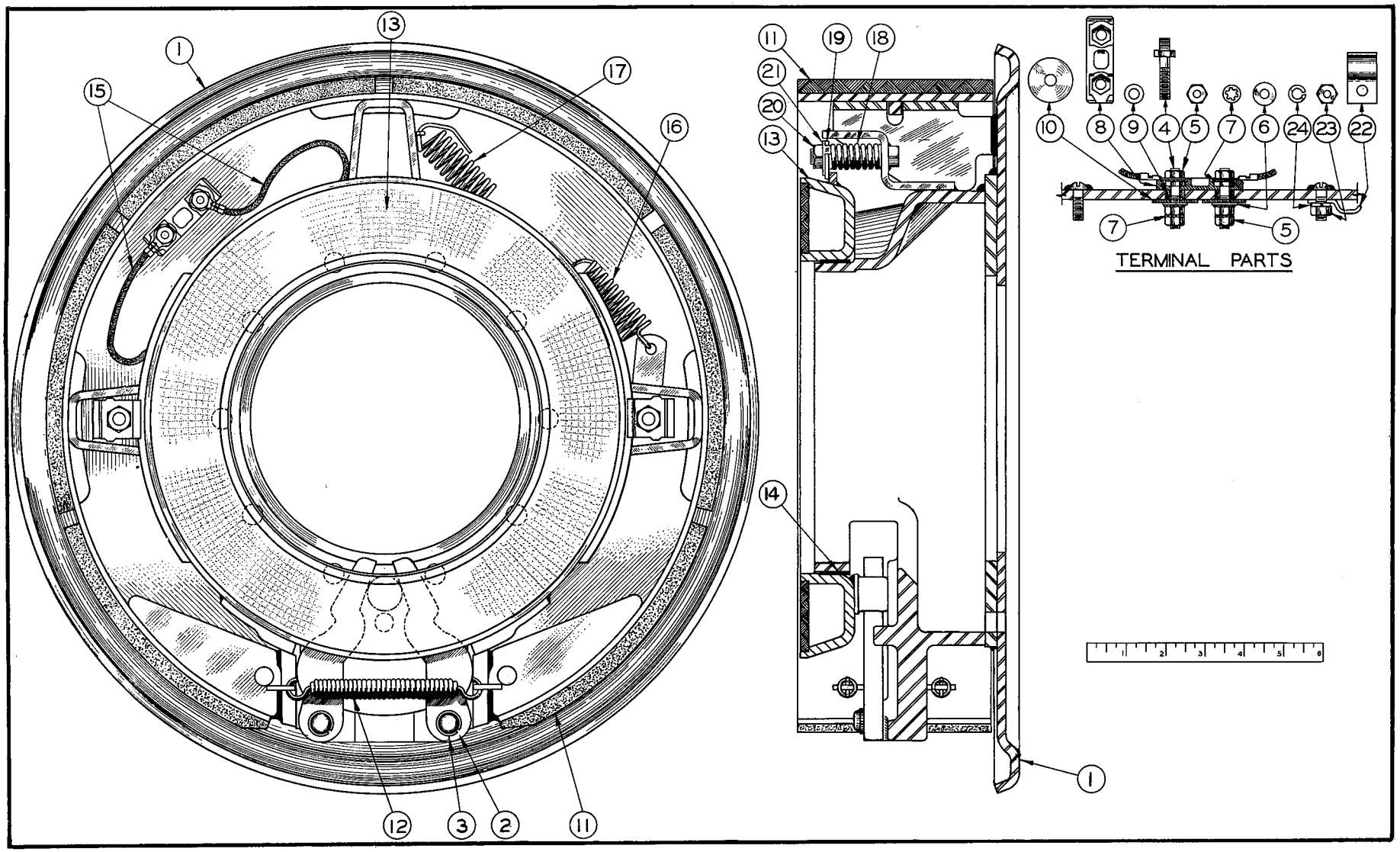

PLATE 1370B—ELECTRIC BRAKE PARTS

ELECTRIC BRAKE 056640
(See Plate 1370B)

USAGE: Model AD4 Graders, and Model AD3 Graders serial No. 328 and up. See page 153 for listing of complete Brake Assembly.

ITEM	PART NUMBER	QTY.	DESCRIPTION	KIT NUMBER
			NOTE: Quantities indicated are for one wheel only.	
1	054698	1	PLATE ASSEMBLY, back (Includes items 2 thru 10)	
2	054217	1	CAM, brake band operating	
3	054684	1	RING, cam retaining	
4	054694	2	STUD, terminal, magnet cables	
5	907830	6	NUT, brass, 1/4"NF	
6	054695	2	WASHER, plain (brass)	
7	909367	4	LOCKWASHER, internal teeth, 1/4"	
8	054696	1	INSULATOR, magnet terminal	
9	054693	2	BUSHING, insulating, magnet terminal stud	
10	054691	2	INSULATOR, magnet terminal stud	
11	056639	1	BAND AND LINING ASSEMBLY. (See EXCHANGE OFFER below)	
12	054686	1	SPRING, brake band retracting	
13	065485	1	MAGNET ASSEMBLY (Includes items 14 and 15)	
14	054700	1	BUSHING, magnet	
15	054697	1	CABLE ASSEMBLY, magnet to back plate (2 CABLES, 1 INSULATOR) (Used on graders prior to #2201)	
	065486	2	CABLE, magnet to back plate (Used on graders #2201 and up)	
16	054687	1	SPRING, magnet retracting - right	
17	054688	1	SPRING, magnet retracting - left	
18	054689	2	SPRING, magnet retaining plate	
19	054690	2	PLATE, magnet retaining	
20	911041	2	NUT, 3/8"NF	
21	054692	2	LOCK, nut	
22	054683	1	CLAMP, brake cable	
23	911024	1	NUT, 1/4"NC	
24	904204	1	LOCKWASHER, 1/4"	

BRAKE BAND EXCHANGE OFFER: Brake band linings are not serviced separately due to necessity of precision grinding after being riveted in place. Used BAND AND LINING ASSEMBLIES may be returned to the factory for credit to apply against the purchase of new BAND AND LINING ASSEMBLIES. The used part is identified as part No. 055143 and the amount of allowable credit is indicated in the Repair Parts Price List under this number.

RECONDITIONING SERVICE: Magnets and Armatures will be reconditioned by the manufacturer at a very reasonable charge.

Back Plates (item 1), which have the cam pins damaged, will be reconditioned at a nominal charge by the manufacturer.

Send old parts to: Warner Electric Brake Mfg. Co., Beloit, Wisconsin

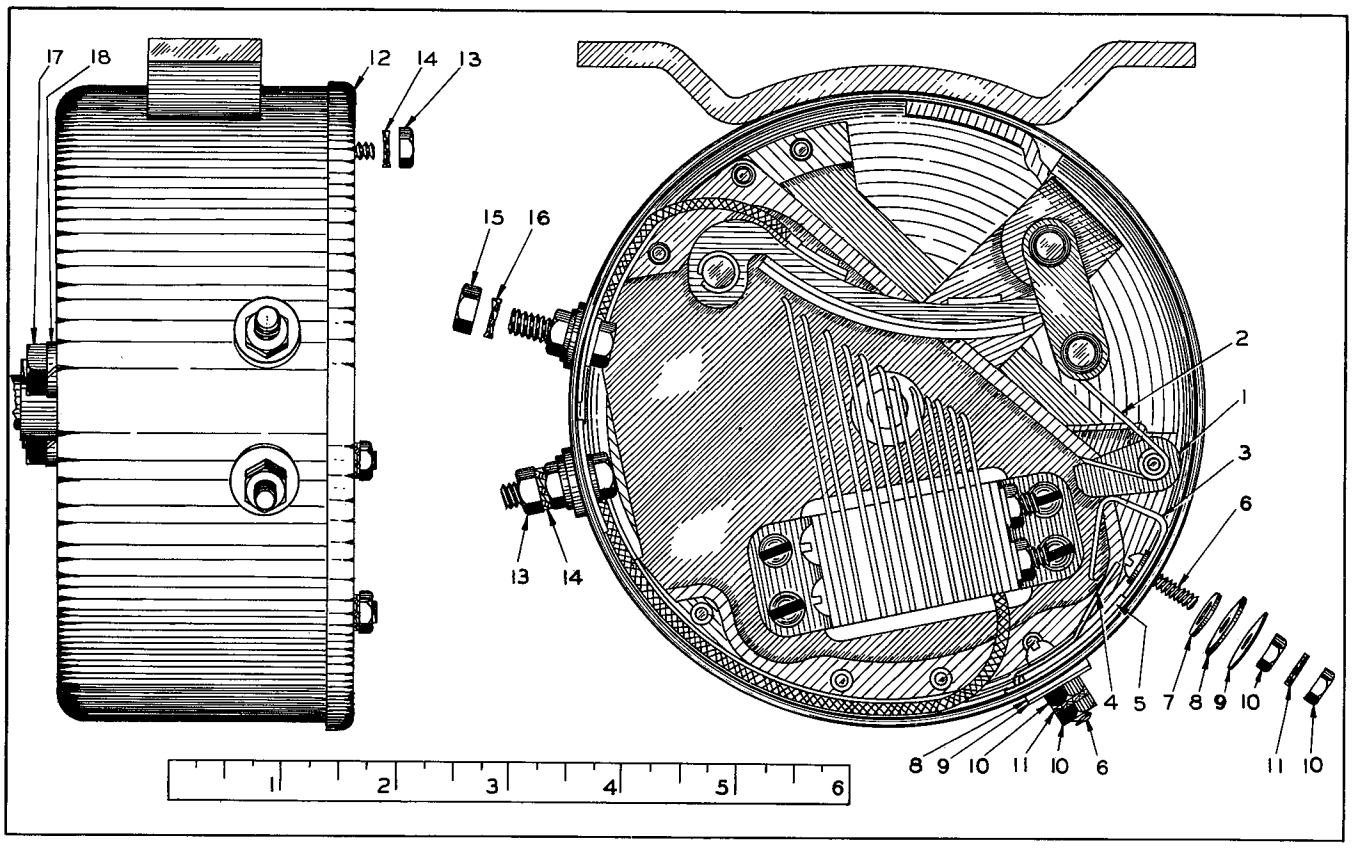

PLATE 1364A-ELECTRIC BRAKE CONTROLLER PARTS

ELECTRIC BRAKE CONTROLLER 605816
(See Plate 1364A)

USAGE: Model AD4 Graders and Model AD3 Graders serial No. 328 and up.
See page 153 for listing of complete Controller Assembly.

ITEM	PART NUMBER	QTY.	DESCRIPTION	KIT NUMBER
1	054904	1	CAM, stoplight contact	
2	054903	1	SPRING, stoplight contact cam	
3	054905	1	CONTACT, stoplight	
4	054910	1	CONTACT, stoplight	
5	054909	1	INSULATOR, stoplight contact (inside case)	
6	900560	2	SCREW, machine, round head, #10-32NF x 3/4"	
7	054906	2	INSULATOR (thru case)	
8	054907	2	INSULATOR (outside case)	
9	054908	2	WASHER, plain (brass)	
10	910251	4	NUT, #10-32NF	
11	909055	4	LOCKWASHER, external teeth, #10	
12	054911	1	COVER	
13	910251	3	NUT, #10-32NF	
14	909055	3	LOCKWASHER, external teeth, #10	
15	907830	2	NUT, brass, 1/4"NF (main terminal)	
16	909367	2	LOCKWASHER, external teeth, 1/4"	
17	911040	2	NUT, 1/4"NF (attach resistance unit to case)	
18	904204	2	LOCKWASHER, 1/4"	

NOTE: Should service be required on parts other than those listed above, the entire unit should be returned direct to Warner Electric Brake Mfg. Co., Beloit, Wisconsin or to the nearest authorized Warner Electric Service Station.

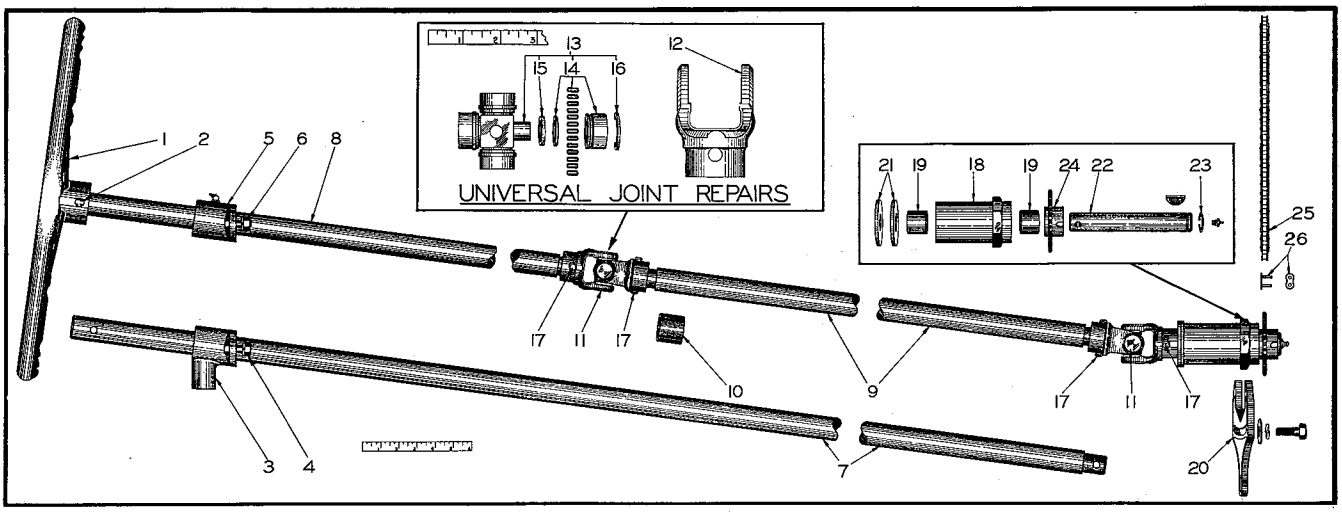

PLATE 2047—STEERING CONTROL

STEERING CONTROL
(See Plate 2047)

ITEM	PART NUMBER	QUANTITY AD3	QUANTITY AD4	DESCRIPTION	KIT NUMBER
1	056265	1	1	WHEEL, steering (When required for graders prior to #622 also order SHAFT 056383)	
2	053988	1	1	PIN, straight (1/2" x 2-1/2")	
3	604228	1	-	BRACKET, steering wheel shaft (Used on graders prior to #328)	
4	903631	2	-	CAPSCREW, 3/8"NC x 1-1/4"	
	904206	2	-	LOCKWASHER, 3/8"	
	911026	2	-	NUT, 3/8"NC	
5	605750	1	1	BRACKET, steering wheel shaft (Used on graders #328 and up)	
	915275	1	1	FITTING, lubricating, 67-1/2°, 1/8"NPT	
6	903631	2	2	CAPSCREW, 3/8"NC x 1-1/4"	
	904206	2	2	LOCKWASHER, 3/8"	
	911026	2	2	NUT, 3/8"NC	
7	------	1	-	SHAFT, steering wheel (163" long)(Used on graders prior to #328. Order 1 SHAFT 056383, 1 SHAFT 050926, 1 JOINT ASSEMBLY 053121, 2 PINS 601935 and 4 cotter PINS 900805)	
8	056383	1	1	SHAFT, steering wheel (45" long)(Graders #328 and up)	
9	050926	1	1	SHAFT, steering control (117-3/4" long)(Graders #328 and up)	
10	604549	1	1	BEARING, plain, steering control shaft	
11	053121	2	2	JOINT ASSEMBLY, universal (Includes items 12thru 16)(1 less used on graders prior to #328)	
				NOTE: The universal joints furnished as original equipment on graders prior to serial No. 680 cannot be repaired in the field and must be replaced as complete units. Do not order items 12 thru 16 for such machines unless the late type joints have since been installed.	
12	053119	4	4	YOKE, universal joint	
13	053120	2	2	SPIDER KIT, universal joint (Each consists of 1 SPIDER, 4 WASHERS 055733, 4 BEARING ASSEMBLIES 053114, 4 RINGS 053240)	
14	053114	8	8	BEARING ASSEMBLY, universal joint (Each consists of 1 CUP, 15 ROLLERS and 1 RETAINER)	
15	055733	8	8	WASHER, sealing, universal joint bearing (cork)	
16	053240	8	8	RING, snap, universal joint bearing	

(Continued)

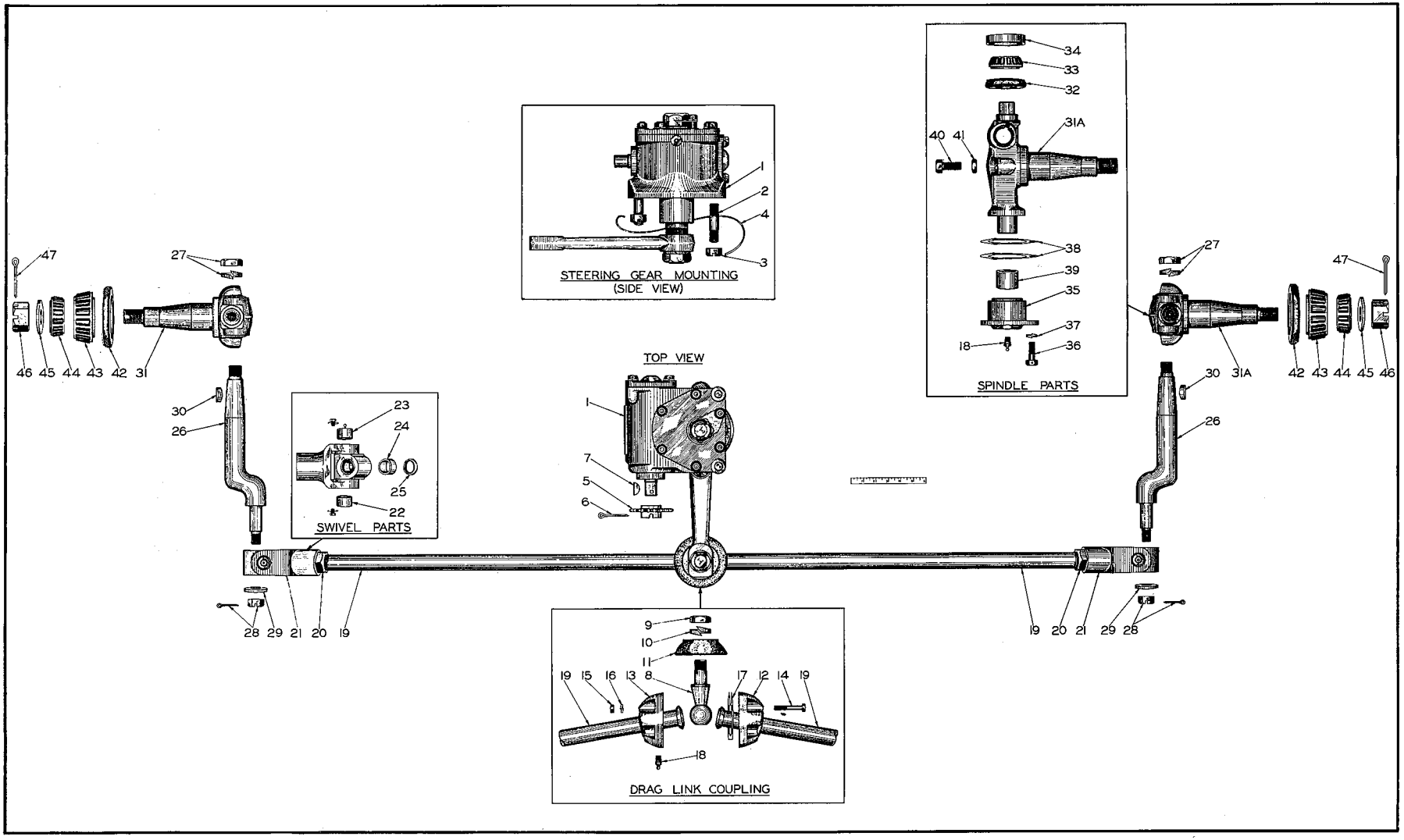

PLATE 1363B—STEERING GEAR AND FRONT WHEEL SPINDLES

STEERING CONTROL (Cont'd)

ITEM	PART NUMBER	QUANTITY AD3	QUANTITY AD4	DESCRIPTION	KIT NUMBER
17	601935	4	4	PIN, universal joint (3/8" x 2")(2 less used on graders prior to #328)	
	900805	8	8	PIN, cotter, 1/8" x 3/4"	
18	604490	1	1	CAGE, steering control shaft	
19	604925	2	2	BEARING, needle, steering control shaft	
20	604144	1	1	WRENCH, chain adjusting	
	903638	1	1	CAPSCREW, 1/2"NC x 1-1/4"	
	904208	1	1	LOCKWASHER, 1/2"	
	900818	1	1	WASHER, plain, U.S. std., 1/2"	
21	900822	2	2	WASHER, plain, U.S. std., 1" (Use as req'd)	
22	065628	1	1	SHAFT, steering control sprocket (When for graders prior to #2435 also order 1 RING 054182)	
	914465	1	1	FITTING, lubricating, straight, 1/8"NPT	
23	054182	1	1	RING, snap, sprocket shaft (Used on graders #2435 and up)	
24	604545	1	1	SPROCKET, steering control (20 teeth)	
	905126	1	1	KEY, #15 woodruff, 1/4" x 1"	
25	------	1	1	CHAIN, steering drive (No. 41, 124 links, 1/2" pitch, 1/4" wide. Includes LINK 915002.)(Used on graders prior to #2926. Order CHAIN 066246)	
	066246	1	1	CHAIN, steering drive (No. 40, 124 links, 1/2" pitch, 5/16" wide. Includes LINK 915515)(Used on graders #2926 and up)	
26	915002	1	1	LINK, connecting, steering drive chain (For No. 41 CHAIN only)(Used on graders prior to serial No. 2926)	
	915515	1	1	LINK, connecting, steering drive chain (For No. 40 CHAIN only)(Used on graders serial No. 2926 and up)	

STEERING GEAR AND FRONT WHEEL SPINDLES
(See Plate 1363B)

1	604554	1	-	GEAR ASSEMBLY, steering (Used on graders prior to #328. Order 1 GEAR ASSEMBLY 050996, 2 STUDS 050999, 2 NUTS 912331 and 1 WIRE 023756. Also enlarge two mounting holes in front casting to 25/32" diam.)	
	604555	2	-	STUD (5/8"NC x 3-1/8")	
	911029	2	-	NUT, 5/8"NC	
	904209	2	-	LOCKWASHER, 5/8"	
	050996	1	1	GEAR ASSEMBLY, steering (Used on graders #328 thru #362 Order GEAR ASSEMBLY 067525)	
	067525	1	1	GEAR ASSEMBLY, steering (Used on graders #3642 and up)	
2	050999	2	2	STUD (3/4"NF x 3-1/8")	
3	912331	2	2	NUT, slotted, 3/4"NF	
4	023756	1	1	WIRE, locking (1/16" x 26")	
				NOTE: See page 163 for repair parts of all steering Gear assemblies listed above.	
5	604545	1	1	SPROCKET, steering gear driving (20 teeth)	
6	900813	1	1	PIN, cotter, 3/16" x 2"	
7	905126	1	1	KEY, #15 woodruff, 1/4" x 1"	
8	604279	1	1	PIN, ball, steering gear arm	
9	911051	1	1	NUT, jam, 1"NF	
10	910916	1	1	LOCKWASHER, 1"	
11	604289	1	1	SHIELD, steering gear ball pin (neoprene)	
12	604109	1	1	CAP, steering gear ball pin	

(Continued)

STEERING GEAR AND FRONT WHEEL SPINDLES (Cont'd)

ITEM	PART NUMBER	QUANTITY AD3	QUANTITY AD4	DESCRIPTION	KIT NUMBER
13	604110	1	1	CAP, steering gear ball pin (threaded for lubricating fitting)	
14	046419	4	4	CAPSCREW, 3/8"NF x 2"	
15	911041	4	4	NUT, 3/8"NF	
16	904206	4	4	LOCKWASHER, 3/8"	
17	604290	18	18	SHIM, steering gear ball pin cap (Use as required)	
18	910260	3	3	FITTING, LUBRICATING, STRAIGHT, 1/8"NPT	
19	604350	2	2	LINK, drag	
20	912251	2	2	NUT, jam, 1-1/4"NF	
21	066627	2	2	SWIVEL ASSEMBLY, drag link (Each consists of 1 YOKE, 1 SWIVEL, 1 PIN, and items 22 thru 25)	
	914465	2	2	FITTING, lubricating, straight, 1/8"NPT (Graders prior to No. 3171**)	
22	051084	2	2	BUSHING, drag link swivel yoke - lower (Graders prior to No. 3171**)	
	066632	2	2	BEARING, needle, drag link swivel yoke - lower (Used on graders No. 3171* and up)	
	910196	2	2	CAPSCREW, 5/16"NC x 3/8"	
	901165	2	2	WASHER, plain, U.S. std., 5/16"	
23	051084	2	2	BUSHING, drag link swivel yoke - upper (Used on graders prior to No. 3171**)	
	066633	2	2	BEARING, needle, drag link swivel yoke - upper (Includes lubricating FITTING)(Used on graders No. 3171* and up)	
	910196	2	2	CAPSCREW, 5/16"NC x 3/8"	
	901165	2	2	WASHER, plain, U.S. std., 5/16"	
24	066631	4	4	BUSHING, drag link swivel (Graders No. 3171* and up)	
25	053926	4	4	SEAL, oil, drag link swivel (Graders No. 3171* and up)	
26	604104	2	2	ARM, steering, front wheel spindle	
27	911051	2	2	NUT, jam, 1"NF	
	910916	2	2	LOCKWASHER, 1"	
28	912331	2	2	NUT, slotted, 3/4"NF	
	900807	2	2	PIN, cotter, 1/8" x 1-1/4"	
29	602068	2	2	WASHER, plain	
30	049149	2	2	KEY, spindle steering arm (hardened, 5/16" x 1-1/8")	
31	066363	1	1	SPINDLE, left front wheel	
31A	066364	1	1	SPINDLE, right front wheel	
32	604343	2	2	SEAL, oil, front wheel spindle (external type)	
33	604388	2	2	CONE ASSEMBLY, front wheel spindle upper bearing	
34	604387	2	2	CUP, front wheel spindle upper bearing	
35	605037	2	2	BEARING ASSEMBLY, front wheel spindle - lower (Includes BUSHING 605036)(Used on graders prior to #2970)	
	066365	2	2	RETAINER, front wheel spindle needle bearing (Used on graders #2970 and up)	
36	903639	6	6	CAPSCREW, 1/2"NC x 1-1/2"	
37	904208	6	6	LOCKWASHER, 1/2"	
38	604292	18	18	SHIM, spindle lower bearing (Use as required)	

(Continued)

ITEM	PART NUMBER	QUANTITY AD3	QUANTITY AD4	DESCRIPTION	KIT NUMBER
39	605036	2	2	BUSHING, front wheel spindle (oilite bronze)(Used on graders prior to #2970)	
	066362	2	2	BEARING, needle, front wheel spindle (Used on graders #2970 and up)	
40	604349	4	4	BOLT, front wheel spindle stop (hex head, 5/8"NF x 1-1/2")	
41	911049	4	4	NUT, jam, 5/8"NF	
42	604345	2	2	SEAL, oil, front wheel (external type)	
43	043011	2	2	CONE ASSEMBLY, front wheel inner bearing	
44	604922	2	2	CONE ASSEMBLY, front wheel outer bearing	
45	601949	2	2	WASHER, front wheel spindle	
46	911843	2	2	NUT, hex, slotted, 1-1/4"NF	
47	910024	2	2	PIN, cotter, 3/16" x 2-1/2"	

*Including graders No. 3015 thru 3018, 3020 thru 3024 and 3026 thru 3028.

**Excluding graders No. 3015 thru 3018, 3020 thru 3024, and 3026 thru 3028.

604554 STEERING GEAR ASSEMBLY
050996 STEERING GEAR ASSEMBLY
067525 STEERING GEAR ASSEMBLY

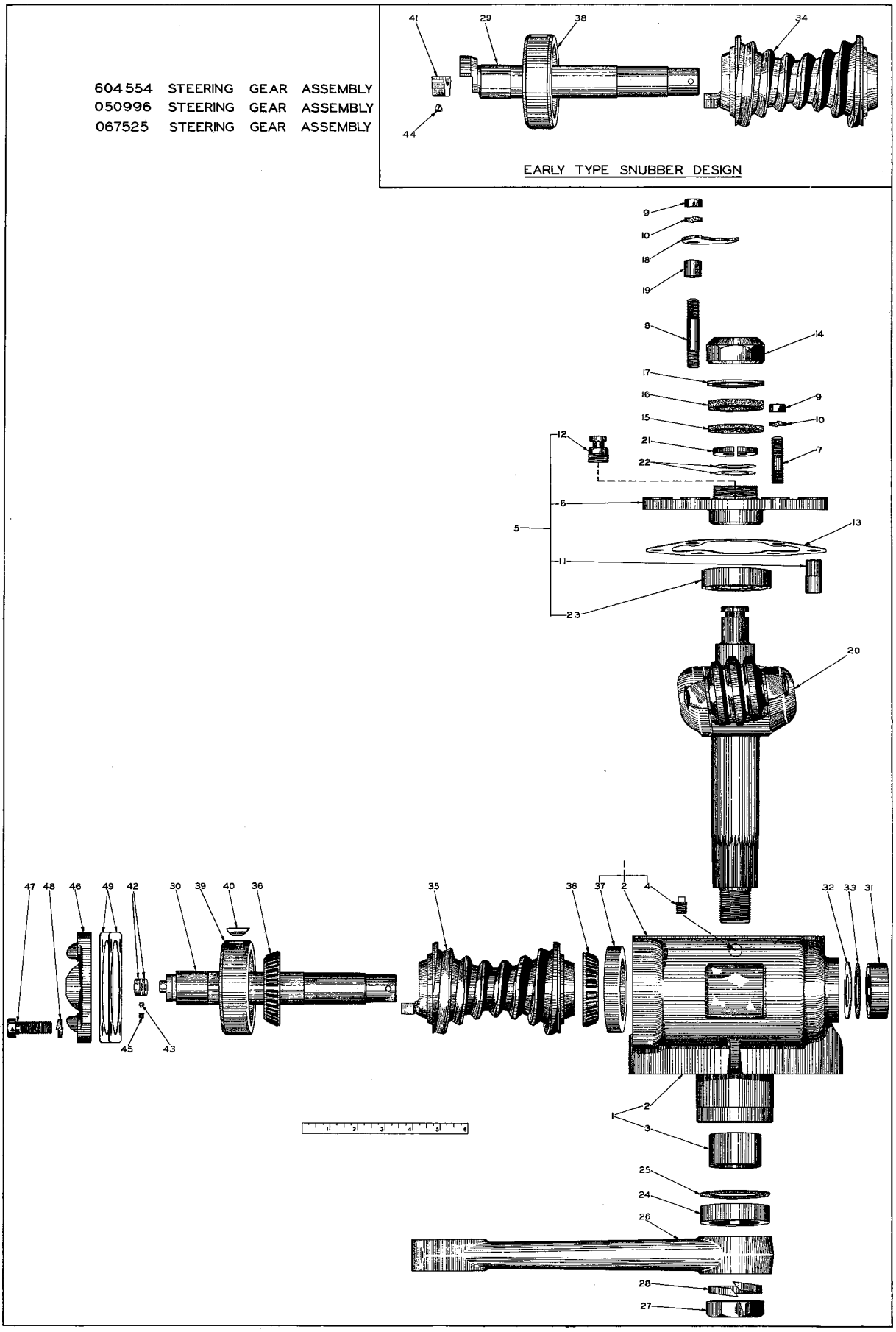

PLATE 1372B—STEERING GEAR PARTS

STEERING GEAR PARTS
(See Plate 1372B)

604554 STEERING GEAR ASSEMBLY (Early AD3 Graders)
050996 STEERING GEAR ASSEMBLY (AD3 and AD4 Graders)
067525 STEERING GEAR ASSEMBLY (LATE AD3 and AD4 Graders)
See page 159

ITEM	PART NUMBER	QUANTITY 604554	QUANTITY 050996	QUANTITY 067525	DESCRIPTION	KIT NUMBER
1	605231	1	-	-	HOUSING ASSEMBLY (For 5/8"NC mounting studs)(Consists of items 2 thru 12, and item 37)	
	054785	-	1	1	HOUSING ASSEMBLY (For 3/4"NF mounting studs)(Consists of items 2 thru 12, and item 37)	
2	------	1	1	1	HOUSING only (Not serviced. Order item 1)	
3	------	1	-	-	BUSHING, housing (1-15/16" long)(Order 2 BUSHINGS 605488)	
	605488	-	2	2	BUSHING, housing (1-1/8" long)	
4	901651	1	1	1	PLUG, pipe, square head, 1/8"NPT	
5	605234	1	1	1	COVER KIT - top (Consists of items 6, 11, 12 and 23)	
6	------	1	1	1	COVER only (Not serviced. Order item 5)	
7	605239	5	5	5	STUD (7/16"NC x 7/16"NF x 1-11/16")	
8	605246	1	1	1	STUD (7/16"NC x 7/16"NF x 2-5/16")	
9	911042	6	6	6	NUT, 7/16"NF	
10	904207	6	6	6	LOCKWASHER, 7/16"	
11	605262	2	2	2	PIN, dowel, housing top cover	
12	605238	1	1	1	PLUG, vent, housing top cover	
13	605235	1	1	1	GASKET, housing top cover	
14	605237	1	1	1	NUT, gear shaft thrust	
15	605240	1	1	1	WASHER, sealing, gear shaft thrust nut (rubber, 1/8" thick)	
16	605241	1	1	1	WASHER, sealing, gear shaft thrust nut (rubber, 1/4" thick)	
17	605242	1	1	1	RETAINER, thrust nut sealing washer	
18	605248	1	1	1	PLATE, locking, gear shaft thrust nut	
19	605247	1	1	1	SPACER, gear shaft	
20	605233	1	1	1	SHAFT AND GEAR ASSEMBLY (Serviced only as a unit)	
21	605243	2	2	2	WASHER, gear shaft thrust (half only)	
22	605244	2	2	2	SHIM, adjusting, gear shaft end play (.010" thick. Use as req'd)	
	605245	8	8	8	SHIM, adjusting, gear shaft end play (.020" thick. Use as req'd)	
23	605236	1	1	1	BEARING, roller, gear shaft	
24	605249	1	1	1	SEAL, oil, gear shaft	
25	605250	1	1	1	GASKET, gear shaft oil seal	
26	605267	1	1	1	ARM, steering gear	
27	605266	1	1	1	NUT	
28	914724	1	1	1	LOCKWASHER, 1-1/8"	
29	605251	1	1	-	SHAFT, worm	
30	067524	-	-	1	SHAFT, worm	
30A	076087	-	-	1	RING, snap, worm shaft (Used grader #4296 & up)	
31	605263	1	1	1	SEAL, oil, worm shaft	
32	605264	1	1	1	WASHER, backing, worm shaft oil seal (steel)	
33	605265	1	1	1	GASKET, oil seal backing washer (rubber)	

(Continued)

STEERING GEAR PARTS (Cont'd)

ITEM	PART NUMBER	QUANTITY 604554	050996	067525	DESCRIPTION	KIT NUMBER
34	605252	1	1	-	WORM	
35	067526	-	-	1	WORM	
36	605258	2	2	2	ROLLER ASSEMBLY, worm bearing	
37	605259	1	1	1	CUP, worm rear bearing	
38	605260	1	1	-	CUP, worm front bearing	
39	067426	-	-	1	CUP, worm front bearing	
40	605261	1	1	1	KEY, worm front bearing cup (woodruff, 3/16" x 3/4")	
41	------	1	-	-	BAR, snubber (Order 1 BAR 053542 and 1 SPRING 053543)	
	053542	-	1	-	BAR, snubber	
42	067522	-	-	2	ROLLER, snubber	
43	067402	-	-	1	BLOCK, snubber roller	
44	053543	-	1	-	SPRING, snubber bar	
45	067424	-	-	1	SPRING, snubber roller block	
46	605254	1	1	1	COVER, worm	
47	605257	4	4	4	CAPSCREW, 7/16"NF x 1-1/4"	
48	904207	4	4	4	LOCKWASHER, 7/16"	
49	605256	1	1	1	SHIM, worm cover (paper, .010" thick. Use as req'd)	
	605255	1	1	1	SHIM, worm cover (paper, .005" thick. Use as req'd)	
	054784	1	1	1	SHIM, worm cover (paper, .002" thick. Use as req'd)	

MEMO

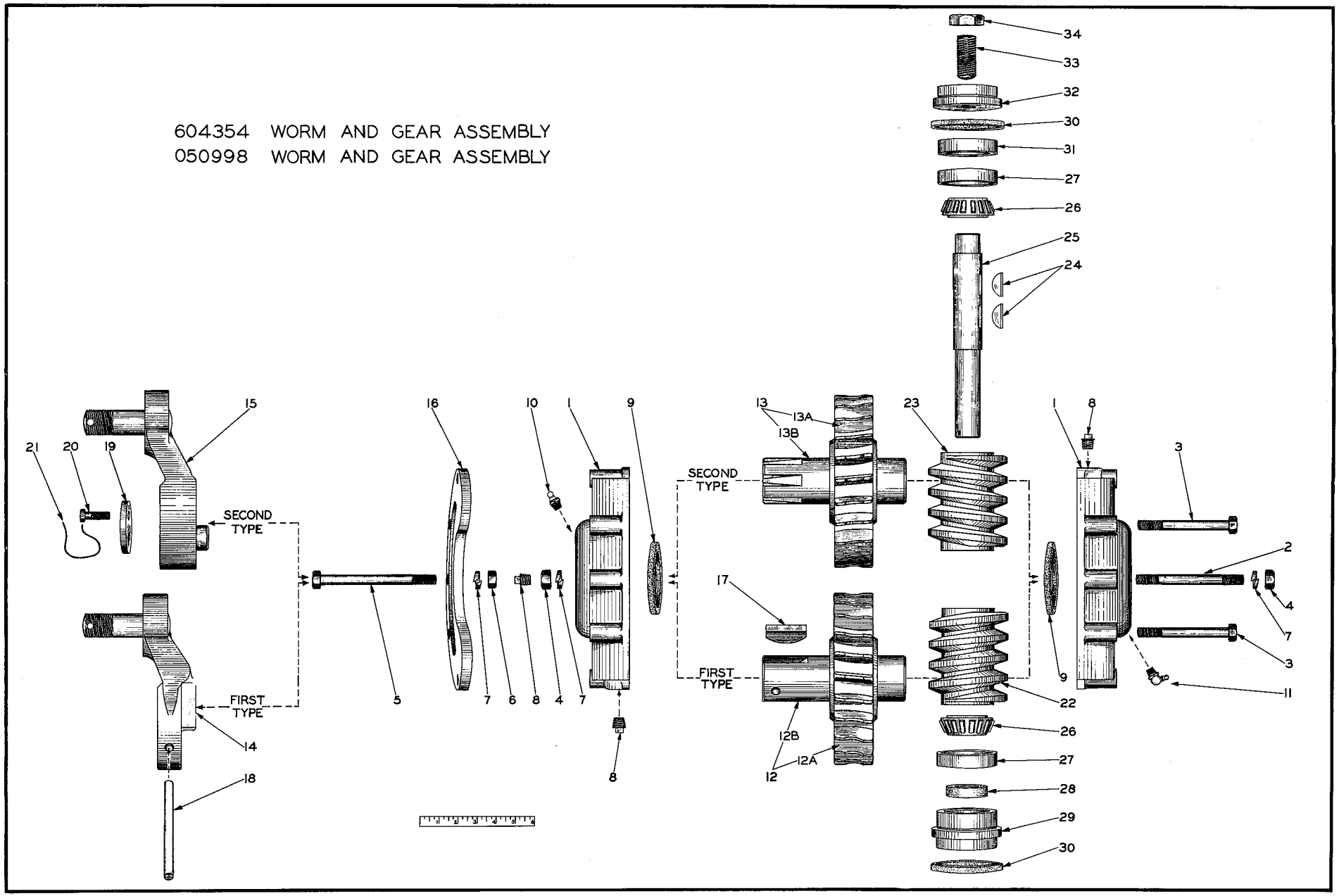

PLATE 1337A—FRONT WHEEL LEAN WORM AND GEAR PARTS

FRONT WHEEL LEAN WORM AND GEAR PARTS
(See Plate 1337A)

ITEM	PART NUMBER	QUANTITY 604354	QUANTITY 050998	DESCRIPTION	KIT NUMBER
				604354 WORM AND GEAR ASSEMBLY (Early AD3 Graders) 050998 WORM AND GEAR ASSEMBLY (AD3 and AD4 Graders)	See page 169
1	604346	1	-	HOUSING ASSEMBLY (Consists of 2 HOUSINGS, 4 STUDS 602264, 8 NUTS 911028 and 8 LOCKWASHERS 904208)	
1	602234	-	1	HOUSING ASSEMBLY (Consists of 2 HOUSINGS, 4 STUDS 602264, 8 NUTS 911028 and 8 LOCKWASHERS 904208)	
2	602264	2	1	STUD (1/2"NC x 5-1/2")	
3	910257	2	2	CAPSCREW, 1/2"NC x 4-3/4"	
4	911028	6	4	NUT, 1/2"NC	
5	053038	-	1	CAPSCREW, 1/2"NF x 6"	
6	911043	-	1	NUT, 1/4"NF	
7	904208	6	5	LOCKWASHER, 1/2"	
8	901653	3	3	PLUG, pipe, 3/8"NPT	
9	602265	2	2	SEAL, housing	
10	914465	1	1	FITTING, lubricating, straight, 1/8"NPT	
11	915273	1	1	FITTING, lubricating, 30°, 1/8"NPT	
12	604280	1	-	GEAR AND SHAFT ASSEMBLY (Consists of items 12A and 12B)	
12A	602268	1	-	GEAR only	
12A	602270	1	-	KEY	
12B	604288	1	-	SHAFT only	
13	050948	-	1	GEAR AND SHAFT ASSEMBLY (Consists of items 13A and 13B)	
13A	602269	-	1	GEAR only	
13A	602270	-	1	KEY	
13B	050898	-	1	SHAFT only	
14	604287	1	-	CRANK	
15	050940	-	1	CRANK	
16	053036	-	1	PLATE, crank stop	
17	602277	1	-	KEY, crank	
18	605510	1	-	PIN, crank retaining (1/2" x 4-7/8")	
19	050928	-	1	WASHER, crank retaining	
20	055373	-	2	CAPSCREW (drilled head, 3/8"NF x 1")	
21	023633	-	1	WIRE, locking (1/16" x 12")	
22	601448	1	-	WORM (right hand)	
23	601449	-	1	WORM (left hand)	
24	911201	2	2	KEY, #E woodruff, 3/8" x 1-1/4"	
25	602280	1	1	SHAFT, worm	
26	604388	2	2	CONE ASSEMBLY, worm shaft bearing	
27	604387	2	2	CUP, worm bearing	
28	603007	1	1	SEAL, oil, worm shaft	
29	602274	1	1	CAP, worm shaft lower bearing	
30	602462	2	2	SEAL, worm shaft bearing cap	
31	602272	1	1	PLUG, worm shaft bearing adjustment	

(Continued)

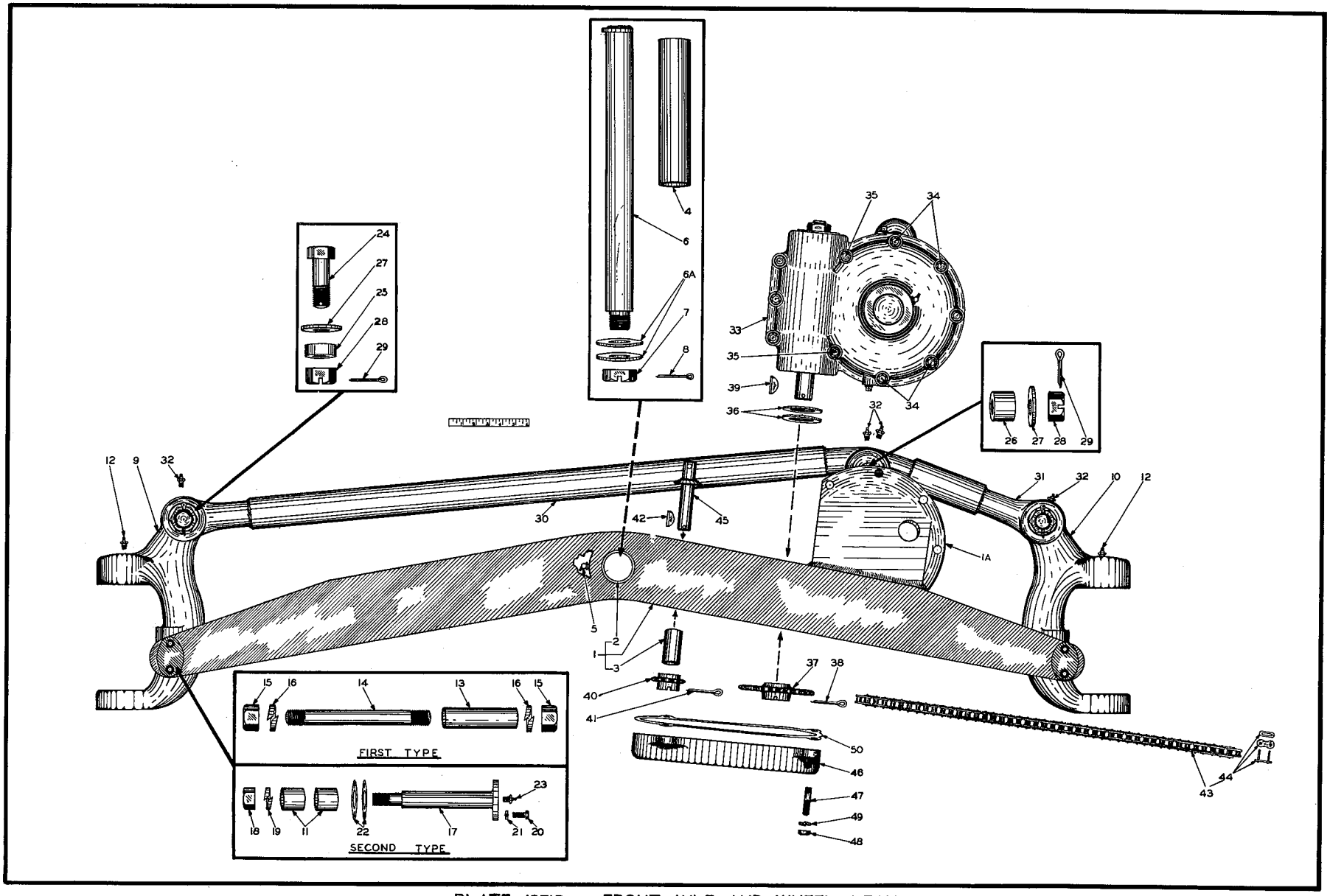

PLATE 1371B — FRONT AXLE AND WHEEL LEAN

FRONT WHEEL LEAN WORM AND GEAR PARTS (Cont'd)
(See Plate 1337A)

ITEM	PART NUMBER	QUANTITY 604354	QUANTITY 050998	DESCRIPTION	KIT NUMBER
32	602273	1	1	CAP, worm shaft upper bearing	
33	911227	1	1	SETSCREW, socket-hd., 1"NC x 2"	
34	911038	1	1	NUT, jam, 1"NC	

FRONT AXLE AND WHEEL LEAN
(See Plate 1371B)

ITEM	PART NUMBER	QUANTITY AD3	QUANTITY AD4	DESCRIPTION	KIT NUMBER
1	051097	1	1	AXLE ASSEMBLY, front (Includes items 1A thru 3)	
1A	050959	1	1	BRACKET, supporting, worm gear housing (Requires welding to axle)	
2	604949	2	2	BUSHING, front axle pivot (2"I. D.)	
3	604338	1	1	BUSHING, front wheel lean sprocket shaft (1"I. D.)	
4	605438	1	1	SPACER, front axle pivot bushings (Graders #57 and up)	
5	915275	2	2	FITTING, lubricating, 67-1/2°, 1/8"NPT	
6	604357	1	1	PIN, front axle pivot	
6A	900825	2	2	WASHER, plain, U. S. std., 1-1/2" (Use as req'd)	
7	913527	1	1	NUT, jam, slotted, 1-1/2"NF	
8	900813	1	1	PIN, cotter, 3/16" x 2"	
9	604067	1	-	KNUCKLE, front wheel lean - left (Used on graders prior to #328)	
	051045	1	1	KNUCKLE ASSEMBLY, front wheel lean - left (Includes item 11)(Used on graders #328 and up)	
10	604066	1	-	KNUCKLE, front wheel lean - right (Used on graders prior to #328)	
	051046	1	1	KNUCKLE ASSEMBLY, front wheel lean - right (Includes item 11)(Used on graders #328 and up)	
11	051043	4	4	BUSHING, front wheel lean knuckle (Used on graders #328 and up)	
12	914465	2	2	FITTING, lubricating, straight, 1/8"NPT	
13	604342	2	-	SPACER, front wheel lean knuckle stud (Graders prior to #328)	
14	604296	2	-	STUD, pivot, front wheel lean knuckle (Graders prior to #328)	
15	900374	4	-	NUT, 1-1/8"NC	
16	914724	4	-	LOCKWASHER, 1-1/8"	
17	051078	2	2	BOLT, pivot, front wheel lean knuckle (Graders after #327)	
18	911047	2	2	NUT, 1"NF	
19	910916	2	2	LOCKWASHER, 1"	
20	036034	4	4	CAPSCREW, 3/8"NF x 1"	
21	904206	4	4	LOCKWASHER, 3/8"	
22	052960	10	10	SHIM, knuckle pivot bolt (Use as req'd)(Graders #327 and up)	
23	914465	2	2	FITTING, lubricating, straight, 1/8"NPT (Graders #328 and up)	
24	601968	2	2	BOLT, wheel lean link	
25	601966	2	2	SPACER, wheel lean link outer bolt	

(Continued)

FRONT AXLE AND WHEEL LEAN (Cont'd)

(See Plate 1371B)

ITEM	PART NUMBER	QUANTITY AD3	QUANTITY AD4	DESCRIPTION	KIT NUMBER
26	604293	1	1	SPACER, wheel lean link inner bolt	
27	601967	3	3	WASHER, wheel lean link bolt	
28	911061	3	3	NUT, hex, slotted, 1-1/4"NC	
29	901344	3	3	PIN, cotter, 1/4" x 2"	
30	604284	1	1	LINK, wheel lean - long (Standard)	
	074700	1	1	LINK, wheel lean - long (Heavy type. For graders with front-mounted equipment)	
31	604283	1	1	LINK, wheel lean - short	
32	912808	4	4	FITTING, lubricating, straight, 1/4"NF	
33	604354	1	-	WORM AND GEAR ASSEMBLY, front wheel lean (Used on graders prior to #328. Order 050998)(See page 167 for repair parts)	
	050998	1	1	WORM AND GEAR ASSEMBLY, front wheel lean (Used on graders #328 and up)(See page 167 for repair parts)	
34	053038	4	4	CAPSCREW, 1/2"NF x 6"	
	911043	4	4	NUT, 1/2"NF	
	904208	4	4	LOCKWASHER, 1/2"	
35	053037	2	2	CAPSCREW, 1/2"NF x 5-1/2"	
	911043	2	2	NUT, 1/2"NF	
	904208	2	2	LOCKWASHER, 1/2"	
36	601941	2	2	SEAL, worm and gear assembly (cork)	
37	604286	1	1	SPROCKET, driven, front wheel lean (27 teeth)	
38	900813	1	1	PIN, cotter, 3/16" x 2"	
39	910156	1	1	KEY, #C woodruff, 5/16" x 1-1/8"	
40	601936	1	1	SPROCKET, driving, front wheel lean (12 teeth)	
41	900813	1	1	PIN, cotter, 3/16" x 2"	
42	905126	1	1	KEY, #15 woodruff, 1/4" x 1"	
43	604297	1	1	CHAIN, wheel lean drive (46 links, 5/8" pitch)(Includes item 44)	
44	605509	1	1	LINK, connecting, wheel lean drive chain	
45	604334	1	1	SHAFT, wheel lean driving sprocket	
46	604089	1	1	COVER, wheel lean driving sprockets	
47	601940	4	4	STUD (1/2"NC x 2")	
48	911028	4	4	NUT, 1/2"NC	
49	904208	4	4	LOCKWASHER, 1/2"	
50	604285	1	1	GASKET, wheel lean driving sprocket cover	

MEMO

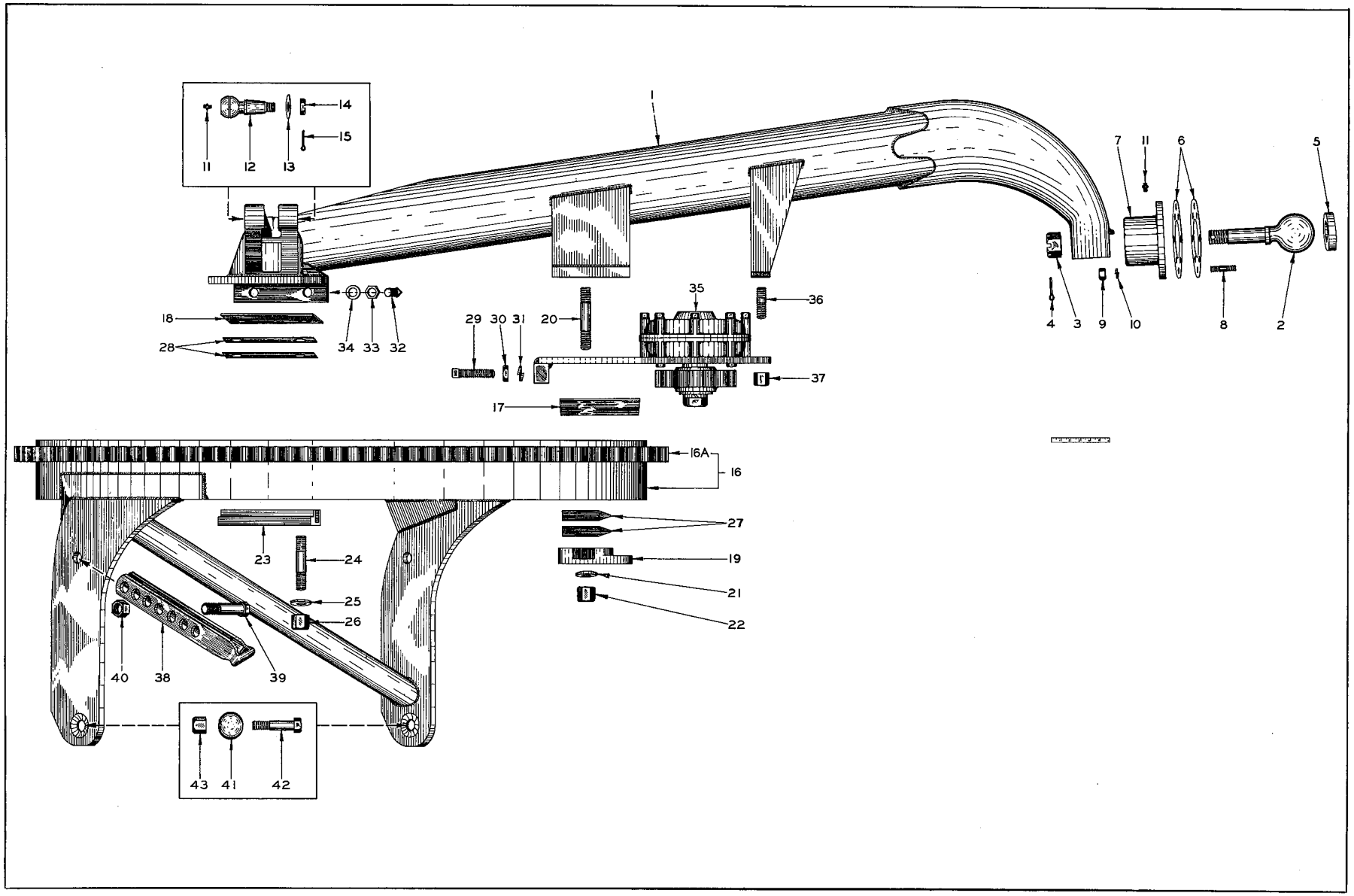

PLATE 1374B—MOLDBOARD DRAWBAR & CIRCLE

MOLDBOARD DRAWBAR AND CIRCLE

(See Plate 1374B)

ITEM	PART NUMBER	QUANTITY AD3	QUANTITY AD4	DESCRIPTION	KIT NUMBER
1	065525	1	1	DRAWBAR, moldboard (When required for graders prior to #1765, and graders #1906 thru #1969, also order 1 SHAFT 064085, 1 SHAFT 064086 and 1 SHAFT 064088)	
2	602201	1	1	BALL, drawbar	
3	902279	1	1	NUT, slotted, 1-1/2"NC	
4	911279	1	1	PIN, cotter, 5/16" x 2-1/4"	
5	602198	1	1	SEAT, drawbar ball	
6	602199	10	10	SHIM, drawbar ball socket (Use as req'd)	
7	600961	1	1	SOCKET, drawbar ball	
8	602200	8	8	STUD (5/8"NC x 2-1/2")	
9	911029	8	8	NUT, 5/8"NC	
10	904209	8	8	LOCKWASHER, 5/8"	
11	914465	4	4	FITTING, lubricating, straight, 1/8"NPT	
12	601972	3	3	PIN, ball, circle lift and side shift	
13	900822	3	3	WASHER, plain, U. S. Std., 1"	
14	911174	3	3	NUT, jam, slotted, 1"NF	
15	900808	3	3	PIN, cotter, 1/8" x 1-1/2"	
16	604249	1	1	CIRCLE, moldboard (Includes item 16A)	
16A	604150	6	6	SEGMENT, circle gear (11-tooth section). Requires welding in place	
17	604272	1	1	PLATE, wear, moldboard circle - front	
18	602667	2	2	PLATE, wear, moldboard circle - rear	
19	604153	1	1	GUIDE, moldboard circle - front	
20	602721	3	3	STUD (1-1/8"NF x 6-1/4")	
21	602663	3	3	WASHER, plain	
22	053994	3	3	NUT, high, 1-1/8"NF	
23	601771	2	2	GUIDE, moldboard circle - rear	
24	602664	4	4	STUD (1-1/8"NF x 5-1/2")	
25	602663	4	4	WASHER, plain	
26	053994	4	4	NUT, high, 1-1/8"NF	
27	604270	14	14	SHIM, circle front guide (Use as req'd)	
28	602688	28	28	SHIM, circle rear guide (Use as req'd)	
29	912606	2	2	SETSCREW, square head, oval point, 7/8"NC x 3-1/2"	
30	911842	2	2	NUT, jam, 7/8"NC	
31	905347	2	2	LOCKWASHER, 7/8"	
32	901267	4	4	SETSCREW, sq-hd., oval point, 7/8"NC x 2-1/2"	
33	911842	4	4	NUT, jam, 7/8"NC	
34	905347	4	4	LOCKWASHER, 7/8"	
35	604273	1	-	CIRCLE TURN ASSEMBLY (Used on graders prior to #328. See page 175 for repair parts)	
	053019	1	1	CIRCLE TURN ASSEMBLY (Used on graders #328 and up. See page 175 for repair parts)	
36	602248	2	2	STUD (1"NF x 3-1/8")	
37	600236	2	2	NUT, high, 1"NF	
38	602937	2	2	LINK, adjusting, moldboard pitch	
39	031055	2	2	CAPSCREW, 1"NF x 3-3/4"	
40	600236	2	2	NUT, high, 1"NF	
41	601133	2	2	BALL, moldboard connection	
42	036546	2	2	CAPSCREW, 1"NF x 4-1/4"	
43	600236	2	2	NUT, high, 1"NF	

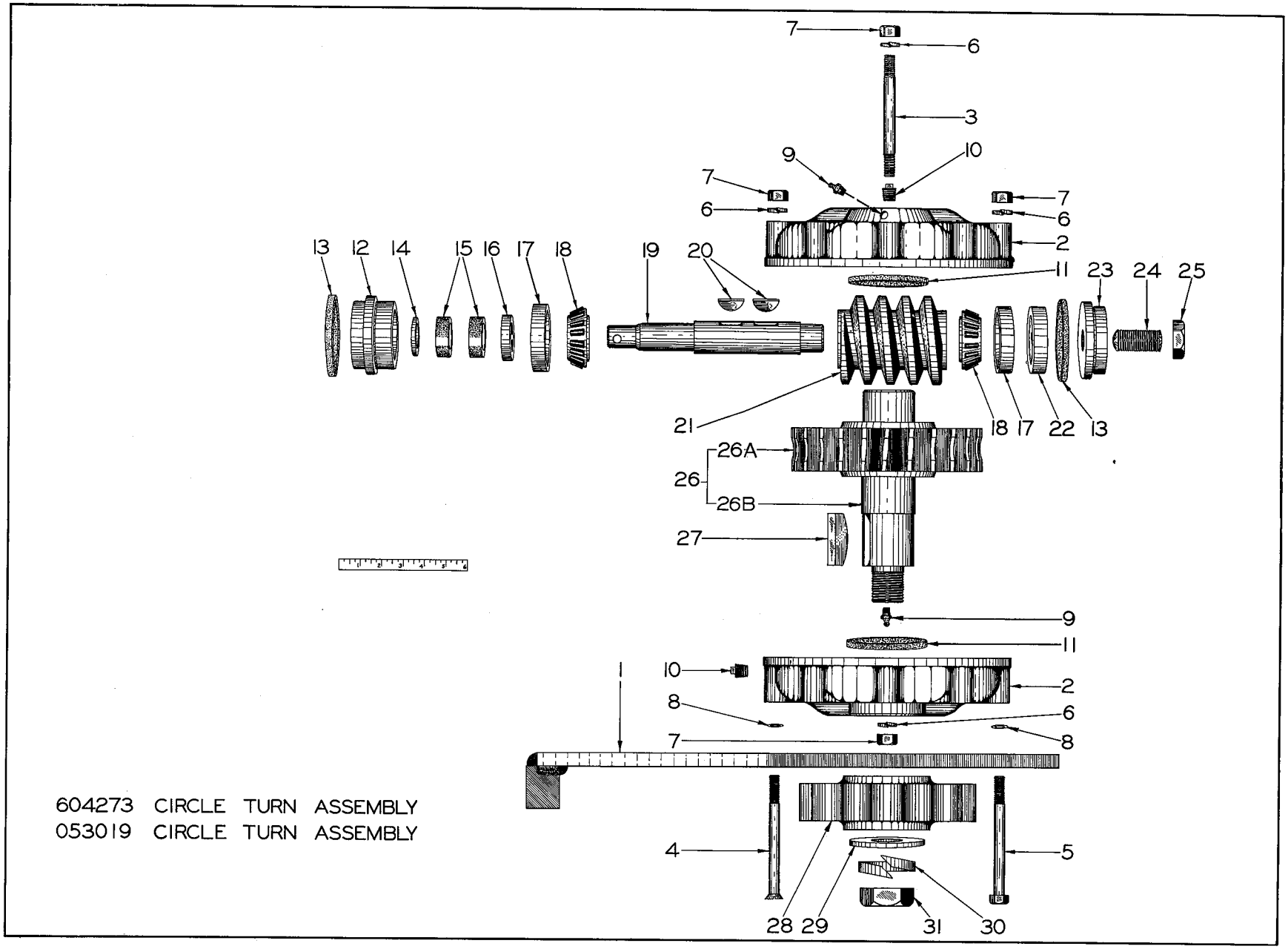

604273 CIRCLE TURN ASSEMBLY
053019 CIRCLE TURN ASSEMBLY

PLATE 1373A - CIRCLE TURN PARTS

CIRCLE TURN PARTS
(See Plate 1373A)

604273 CIRCLE TURN ASSEMBLY (Early AD3 Graders)
053019 CIRCLE TURN ASSEMBLY (AD3 and AD4 Graders)
See page 173

ITEM	PART NUMBER	QUANTITY 604273	QUANTITY 053019	DESCRIPTION	KIT NUMBER
1	604252	1	1	PLATE, circle turn supporting	
2	602237	1	1	HOUSING ASSEMBLY, worm gear (Consists of 2 HOUSINGS, 4 STUDS 602264, 8 NUTS 911028 and 8 LOCKWASHERS 904208)	
3	602264	2	2	STUD (1/2"NC x 5-1/2")	
4	911258	1	1	CAPSCREW, flat head, 1/2"NC x 5-1/2"	
5	911259	7	7	CAPSCREW, hex-head, 1/2"NC x 5-1/2"	
6	904208	12	12	LOCKWASHER, 1/2"	
7	911028	12	12	NUT, 1/2"NC	
8	603585	8	8	WASHER, plain (copper, 1/32" thick)	
9	914465	2	2	FITTING, lubricating, straight, 1/8"NPT	
10	901653	2	2	PLUG, pipe, sq-hd., 3/8"NPT	
11	602265	2	2	SEAL, oil, worm gear housing (cork, 3-3/4"O. D.)	
12	602274	1	1	CAP, retaining, worm shaft rear bearing	
13	602462	2	2	SEAL, oil, worm shaft bearing cap (cork, 3-7/8"O. D.)	
14	603232	1	1	WASHER, worm shaft retaining	
15	603408	2	2	PACKING, worm shaft (felt)	
16	603007	1	1	SEAL, oil, worm shaft	
17	604387	2	2	CUP, worm shaft bearing	
18	604388	2	2	CONE ASSEMBLY, worm shaft bearing	
19	602271	1	1	SHAFT, worm	
20	911201	2	2	KEY, #E woodruff, 3/8" x 1-1/4"	
21	601449	1	-	WORM (left hand. Not illustrated)	
	601448	-	1	WORM (right hand)	
22	602272	1	1	PLUG, worm shaft bearing adjustment	
23	602273	1	1	CAP, worm shaft front bearing	
24	911227	1	1	SETSCREW, socket head, oval point, 1" NC x 2"	
25	911038	1	1	NUT, jam, 1"NC	
26	604258	1	-	GEAR AND SHAFT ASSEMBLY (Consists of items 26A and 26B)	
	053018	-	1	GEAR AND SHAFT ASSEMBLY (Consists of items 26A and 26B)	
26A	602269	1	-	GEAR only (Left helix. Not illustrated)	
	602268	-	1	GEAR only (Right helix. As illustrated)	
	602270	1	1	KEY (woodruff, 5/8" x 2-7/16")	
26B	604257	1	1	SHAFT only	
27	602270	1	1	KEY, pinion (5/8" x 2-7/16")	
28	604154	1	1	PINION (7 teeth)	
29	602560	1	1	WASHER, plain	
30	913077	1	1	LOCKWASHER, 1-1/2"	
31	911207	1	1	NUT, jam, 1-1/2"NF	

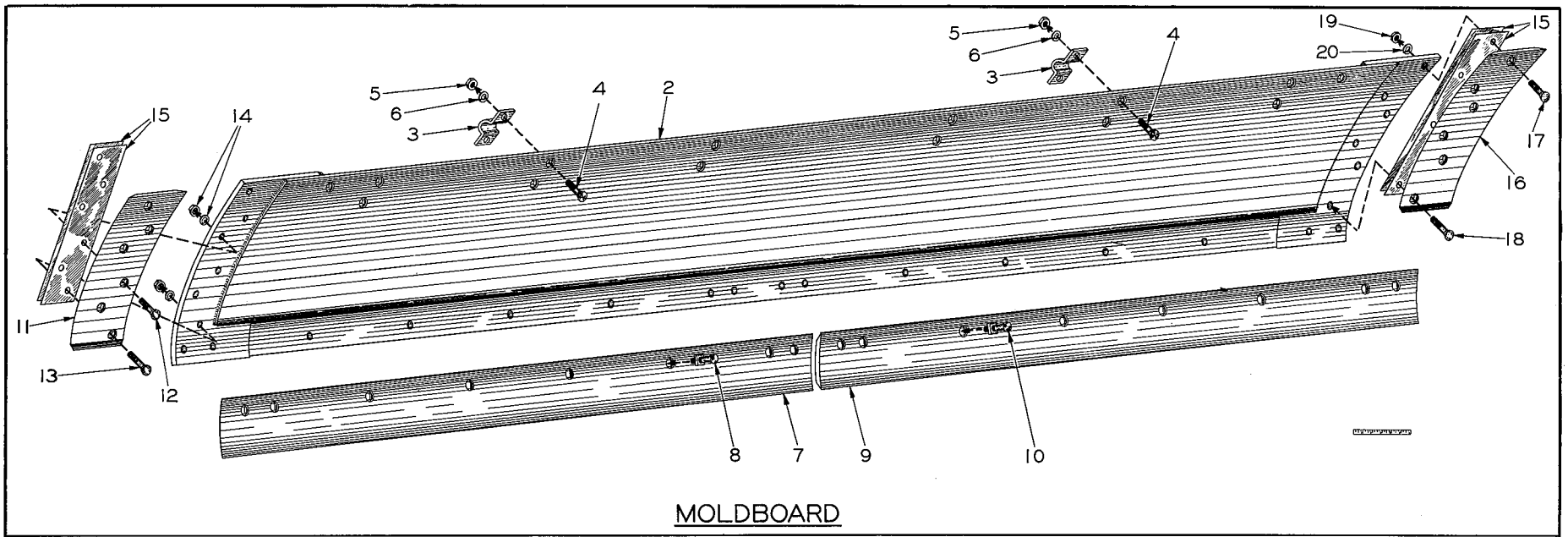

MOLDBOARD

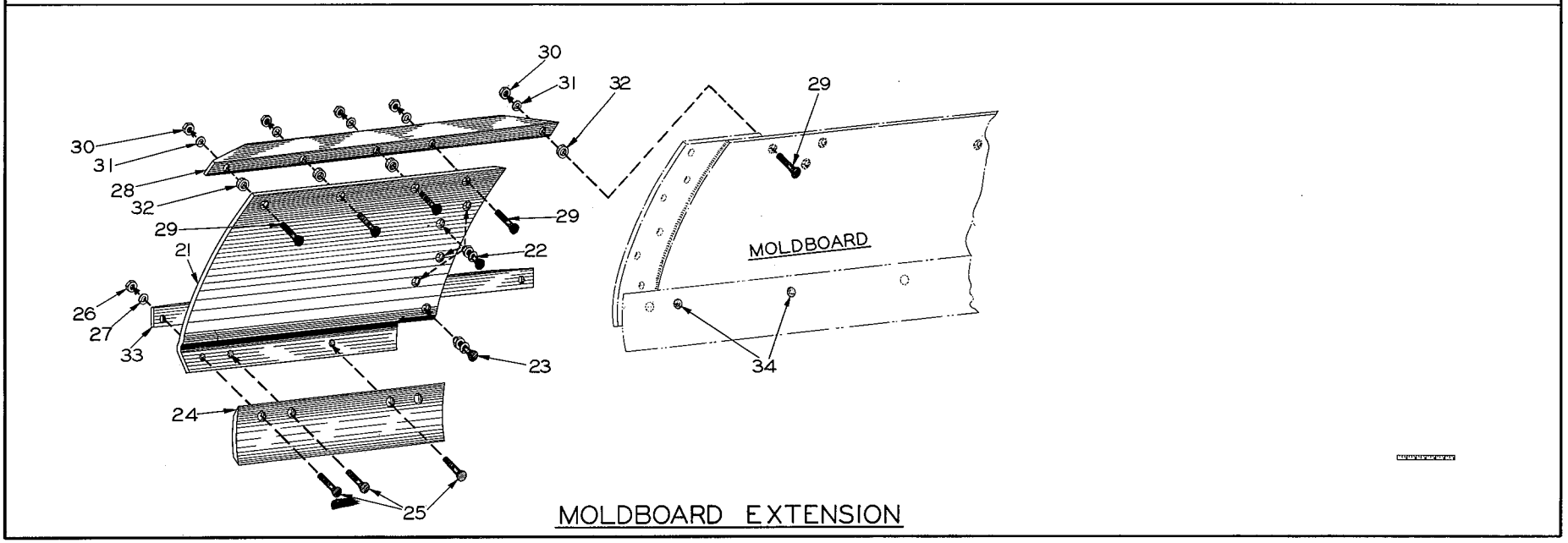

MOLDBOARD EXTENSION

PLATE 1330B- MOLDBOARDS AND EXTENSIONS

MOLDBOARD
(See Plate 1330B)

USAGE: 10 foot - Special Equipment
12 foot - Standard Equipment
14 foot - Special Equipment

ITEM	PART NUMBER	QUANTITY 10 Ft.	12 Ft.	14 Ft.	DESCRIPTION	KIT NUMBER
1	605065	1	-	-	MOLDBOARD ASSEMBLY (10 ft.)	
	605066	-	1	-	MOLDBOARD ASSEMBLY (12 ft., 5/8" thick)(Not used on Model AD4 graders after #3669)	
	068305	-	1	-	MOLDBOARD ASSEMBLY (12 ft., 3/4" thick)(Standard on Model AD4 graders #3670 and up)	
	605067	-	-	1	MOLDBOARD ASSEMBLY (14 ft.)	
					NOTE: Each MOLDBOARD ASSEMBLY listed above consists of items 2 thru 20)	
2	054841	1	-	-	MOLDBOARD only (10 ft.)	
	054840	-	1	-	MOLDBOARD only (12 ft., 5/8" thick)(Not used on Model AD4 graders after #3669)	
	068302	-	1	-	MOLDBOARD only (12 ft., 3/4" thick)(Standard on Model AD4 graders #3670 and up)	
	054842	-	-	1	MOLDBOARD only (14 ft.)	
2A	604134	2	2	2	BRACKET, moldboard attaching (Reqs. welding to moldboard)	
3	601181	2	2	2	BRACKET, moldboard pitch	
4	911633	4	4	4	BOLT, plow, 5/8"NC x 2-1/4"	
5	911029	4	4	4	NUT, 5/8"NC	
6	904209	4	4	4	LOCKWASHER, 5/8"	
7	601500	1	-	-	EDGE, cutting - right hand (5 ft. section)	
	601502	-	1	-	EDGE, cutting - right hand (6 ft. section)	
	601504	-	-	1	EDGE, cutting - right hand (7 ft. section)	
8	914484	7	8	9	BOLT, plow, 5/8"NC x 2"	
	900407	7	8	9	NUT, square, heavy, 5/8"NC	
9	601501	1	-	-	EDGE, cutting - left hand (5 ft. section)	
	601503	-	1	-	EDGE, cutting - left hand (6 ft. section)	
	601505	-	-	1	EDGE, cutting - left hand (7 ft. section)	
10	914484	7	8	9	BOLT, plow, 5/8"NC x 2"	
	900407	7	8	9	NUT, square, heavy, 5/8"NC	
11	054848	1	-	-	BIT, end - right hand (1/2" thick)	
	054836	-	1	-	BIT, end - right hand (5/8" thick)(Not used on Model AD4 graders after #3669)	
	054832	-	1	1	BIT, end - right hand (5/8" thick)(Standard on Model AD4 graders #3670 and up)	
12	911633	5	5	5	BOLT, plow, 5/8"NC x 2-1/4"	
13	913648	1	1	1	BOLT, plow, 5/8"NC x 2-3/4"	
14	911029	6	6	6	NUT, 5/8"NC	
	904209	6	6	6	LOCKWASHER, 5/8"	
15	061479	-	6	6	SHIM, end bit (Use as req'd, For 3/4" thick moldboards only)	
16	054847	1	-	-	BIT, end - left hand (1/2" thick)	
	054835	-	1	-	BIT, end - left hand (5/8" thick)(Not used on Model AD4 graders after #3669)	
	054831	-	1	1	BIT, end - left hand (5/8" thick)(Standard on Model AD4 graders #3670 and up)	
17	911633	5	5	5	BOLT, plow, 5/8"NC x 2-1/4"	
18	913648	1	1	1	BOLT, plow, 5/8"NC x 2-3/4"	
19	911029	6	6	6	NUT, 5/8"NC	
20	904209	6	6	6	LOCKWASHER, 5/8"	

MOLDBOARD EXTENSIONS
(See Plate 1330B)

USAGE: Special Equipment. Applicable to all Moldboards

ITEM	PART NUMBER	QTY.	DESCRIPTION	KIT NUMBER
21	054845	1	EXTENSION, moldboard - left hand	
	054846	1	EXTENSION, moldboard - right hand	
22	911633	8	BOLT, plow, 5/8"NC x 2-1/4"	
	911029	8	NUT, 5/8"NC	
	904209	8	LOCKWASHER, 5/8"	
23	913648	2	BOLT, plow, 5/8"NC x 2-3/4"	
	911029	2	NUT, 5/8"NC	
	904209	2	LOCKWASHER, 5/8"	
24	601438	2	EDGE, cutting (2 ft.)	
25	913648	6	BOLT, plow, 5/8"NC x 2-3/4"	
26	911029	6	NUT, 5/8"NC	
27	904209	6	LOCKWASHER, 5/8"	
28	603156	1	ANGLE, top reinforcing - right hand	
	603157	1	ANGLE, top reinforcing - left hand	
29	913648	10	BOLT, plow, 5/8"NC x 2-3/4"	
30	911029	10	NUT, 5/8"NC	
31	904209	10	LOCKWASHER, 5/8"	
32	602449	8	SPACER, moldboard extension	
33	602457	1	ANGLE, bottom reinforcing - right hand	
	602451	1	ANGLE, bottom reinforcing - left hand	
34	913648	4	BOLT, plow, 5/8"NC x 2-3/4"	
	911029	4	NUT, 5/8"NC	
	904209	4	LOCKWASHER, 5/8"	

MEMO

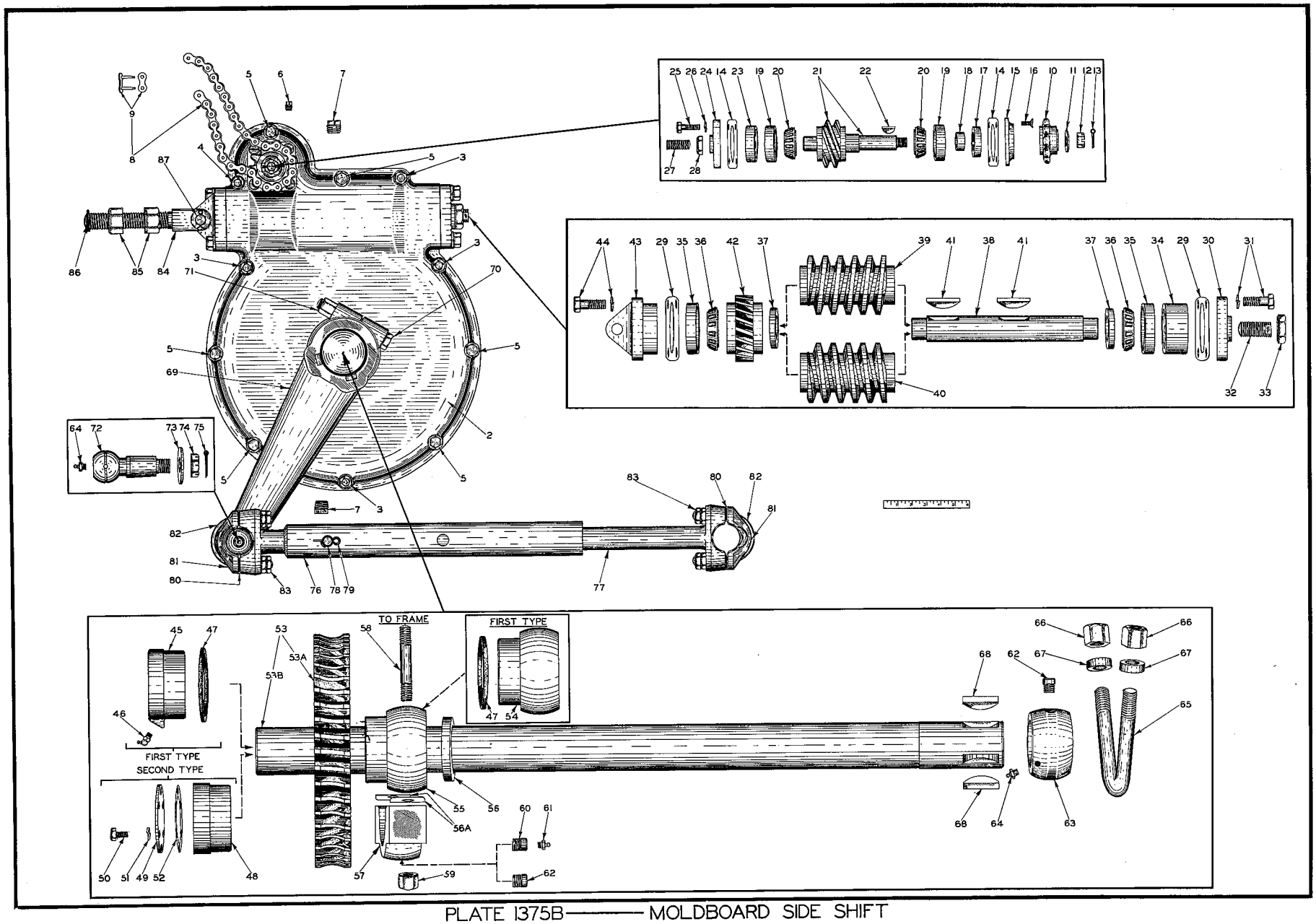

PLATE 1375B——— MOLDBOARD SIDE SHIFT

MOLDBOARD SIDE SHIFT
(See Plate 1375B)

ITEM	PART NUMBER	QUANTITY AD3	QUANTITY AD4	DESCRIPTION	KIT NUMBER
1	604325	1	-	SHIFT GROUP, side - complete (Consists of parts listed below)(Used on graders prior to #328)	
	053048	1	1	SHIFT GROUP, side - complete (Consists of parts listed below)(Used on graders #328 and up)	
2	602654	1	1	HOUSING ASSEMBLY (Consists of 2 HOUSINGS, 4 STUDS 601825, 1 STUD 059812, 10 LOCKWASHERS 904208 and 10 NUTS 911028)	
3	601825	4	4	STUD (1/2"NC x 5-3/8")	
	911028	8	8	NUT, 1/2"NC	
	904208	8	8	LOCKWASHER, 1/2"	
4	059812	1	1	STUD (1/2"NC x 6")	
	911028	2	2	NUT, 1/2"NC	
	904208	2	2	LOCKWASHER, 1/2"	
5	910257	6	6	CAPSCREW, 1/2"NC x 4-3/4"	
	911028	6	6	NUT, 1/2"NC	
	904208	6	6	LOCKWASHER, 1/2"	
6	050903	1	1	PLUG, vent, gear housing	
7	912725	2	2	PLUG, pipe, sq-hd., 1/2"NPT	
8	604374	1	1	CHAIN, driving (30 links, Includes item 9)	
9	MA-1526	1	1	LINK, connecting, driving chain	
10	604373	1	1	SPROCKET, input shaft (12 teeth)	
11	911100	1	1	WASHER, plain, SAE std., 5/8"	
12	913470	1	1	NUT, jam, slotted, 5/8"NF	
13	900806	1	1	PIN, cotter, 1/8" x 1"	
14	601842	2	2	GASKET, input shaft bearing cap	
15	604096	1	1	COVER, retaining, input shaft front bearing	
16	914814	4	4	SCREW, machine, flat head, 3/8"NC x 1"	
17	604372	1	1	SEAL, oil, input shaft	
18	604375	1	1	SPACER, input shaft sprocket	
19	604383	2	2	CUP, input shaft bearing	
20	604382	2	2	CONE ASSEMBLY, input shaft bearing	
21	604370	1	1	GEAR AND SHAFT ASSEMBLY, input (Serviced only as a unit)	
22	905126	1	1	KEY, #15 woodruff, 1/4" x 1"	
23	601841	1	1	PLUG, input shaft bearing adjustment	
24	601467	1	1	CAP, input shaft rear bearing	
25	903631	4	4	CAPSCREW, 3/8"NC x 1-1/4"	
26	904206	4	4	LOCKWASHER, 3/8"	
27	911230	1	1	SETSCREW, socket head, oval point, 5/8"NC x 1-1/2"	
28	911036	1	1	NUT, jam, 5/8"NC	
29	601839	2	2	GASKET, worm shaft bearing cap	
30	601463	1	1	CAP, worm shaft left bearing	
31	903792	4	4	CAPSCREW, 5/8"NC x 1-3/4"	
	904209	4	4	LOCKWASHER, 5/8"	
32	604369	1	1	SETSCREW, worm shaft bearing adjustment (1"NC x 2-5/8")	
33	911038	1	1	NUT, jam, 1"NC	
34	601838	1	1	PLUG, worm shaft bearing adjustment	
35	U-2573	2	2	CUP, worm shaft bearing	

(Continued)

MOLDBOARD SIDE SHIFT (Cont'd)
(See Plate 1375B)

ITEM	PART NUMBER	QUANTITY AD3	QUANTITY AD4	DESCRIPTION	KIT NUMBER
36	604389	2	2	CONE ASSEMBLY, worm shaft bearing	
37	602641	2	2	SPACER, worm shaft	
38	602647	1	1	SHAFT, worm	
39	601456	1	-	WORM (left hand)(Used on graders prior to #328)	
40	601455	1	1	WORM (right hand)(Used on graders #328 and up)	
41	911238	2	2	KEY, #U woodruff, 7/16" x 2-3/4"	
42	601835	1	1	GEAR, spiral (20 teeth)	
43	601464	1	1	CAP, worm shaft right bearing	
44	903792	4	4	CAPSCREW, 5/8"NC x 1-3/4"	
	904209	4	4	LOCKWASHER, 5/8"	
45	------	1	-	BEARING, worm gear shaft - rear (Used on graders prior to #328)(Order 1 BEARING 050914, 1 COVER 050856, 1 GASKET 050840, 6 CAPSCREWS 903775 and 6 LOCKWASHERS 904206)	
46	915273	1	-	FITTING, lubricating, 30°, 1/8"NPT (Graders prior to #328)	
47	602640	2	-	SEAL, oil, worm gear shaft (cork)(Graders prior to #328)	
48	050914	1	1	BEARING, worm gear shaft - rear (Used on graders #328 and up)	
49	050856	1	1	COVER, worm gear shaft rear bearing (Graders #328 and up)	
50	903775	6	6	CAPSCREW, 3/8"NC x 7/8"	
51	904206	6	6	LOCKWASHER, 3/8"	
52	050840	1	1	GASKET, rear bearing cover (Graders #328 and up)	
53	604367	1	-	GEAR AND SHAFT ASSEMBLY, worm (Graders prior to #328)	
	053003	1	1	GEAR AND SHAFT ASSEMBLY, worm (Used on graders #328 and up)	
53A	602653	1	-	GEAR only (left helix)(Graders prior to #328)	
	602652	1	1	GEAR only (right helix)(Graders #328 and up)	
	601833	2	2	KEY (woodruff, 3/4" x 2-7/16")	
53B	604368	1	1	SHAFT only	
54	------	1	-	BEARING, worm gear shaft - front (Used on graders prior to #328. Order 1 BEARING 050904 and 1 SEAL 031163)	
55	050904	1	1	BEARING, worm gear shaft - front (Used on graders #328 and up)	
56	066309	1	1	SEAL, oil, worm gear shaft (Used on graders #328 and up)	
56A	061181	6	6	SHIM, ball cap(1/32" thick. Use as req'd)	
	061182	10	10	SHIM, ball cap(.013" thick. Use as req'd)	
57	601288	1	1	CAP, ball	
58	602207	2	-	STUD (3/4"NC x 5")(Graders prior to #553)	
	050913	2	2	STUD (3/4"NF x 5-3/16")(Graders #553 and up)	
59	911030	2	-	NUT, 3/4"NC (Graders prior to #553)	
	904369	2	-	LOCKWASHER, 3/4" (Graders prior to #553)	
	012767	2	2	NUT, high, 3/4"NF (Graders #553 and up)	
60	605307	1	-	NIPPLE, worm gear shaft lubricating (Graders prior to #328)	
61	914465	1	-	FITTING, lubricating, straight, 1/8"NPT (Graders prior to #328)	

(Continued)

MOLDBOARD SIDE SHIFT (Cont'd)
(See Plate 1375B)

ITEM	PART NUMBER	QUANTITY AD3	QUANTITY AD4	DESCRIPTION	KIT NUMBER
62	605308	2	2	PIN, anchor, worm gear shaft bearing (1 used on graders prior to #328)	
63	605324	1	1	BEARING, worm gear shaft - outer	
64	914465	2	2	FITTING, lubricating, straight, 1/8"NPT	
65	602763	1	1	U-BOLT, worm gear shaft outer bearing	
66	600236	2	2	NUT, hex, high, 1"NF	
67	602214	2	2	WASHER, plain	
68	601833	2	2	KEY, crank (woodruff, 3/4" x 2-7/16")	
69	063989	1	1	CRANK (When required for graders prior to #2763 also order 2 CAPSCREWS 051655)	
70	051655	2	2	CAPSCREW, 3/4"NF x 5-1/4"	
71	012767	2	2	NUT, hex, high, 3/4"NF	
72	601972	1	1	PIN, ball	
73	900822	1	1	WASHER, plain, U.S. std., 1"	
74	911174	1	1	NUT, jam, slotted, 1"NF	
75	900808	1	1	PIN, cotter, 1/8" x 1-1/2"	
76	604364	1	1	TUBE, link	
77	604366	1	1	ROD, link	
78	602224	1	1	PIN, coupling, link rod and tube	
79	911179	1	1	PIN, cotter, 1/4" x 1-1/4"	
80	053992	16	16	SHIM, socket cap (Use as required)	
81	053986	2	2	CAP, socket	
82	------	2	-	U-BOLT (5/8"NC)(Used on graders prior to #328. Order 1 U-BOLT 605665 and 4 NUTS 911049)	
	605665	2	2	U-BOLT (5/8"NF)(Used on graders #328 and up)	
83	911036	8	-	NUT, jam, 5/8"NC (Graders prior to #328)	
	911049	8	8	NUT, jam, 5/8"NF (Graders #328 and up)	
84	604362	1	1	YOKE, torque	
85	913469	2	2	NUT, 1-1/8"NF	
86	900812	1	1	PIN, cotter, 3/16" x 1-3/4"	
87	012526	1	-	CAPSCREW, 3/4"NF x 2-1/4" (Graders prior to #328)	
	912767	1	-	NUT, high, 3/4"NF	
	904369	1	-	LOCKWASHER, 3/4"	
	605433	1	1	PIN, torque yoke (Used on graders #328 and up)	
	900938	2	2	PIN, cotter, 3/16" x 1"	

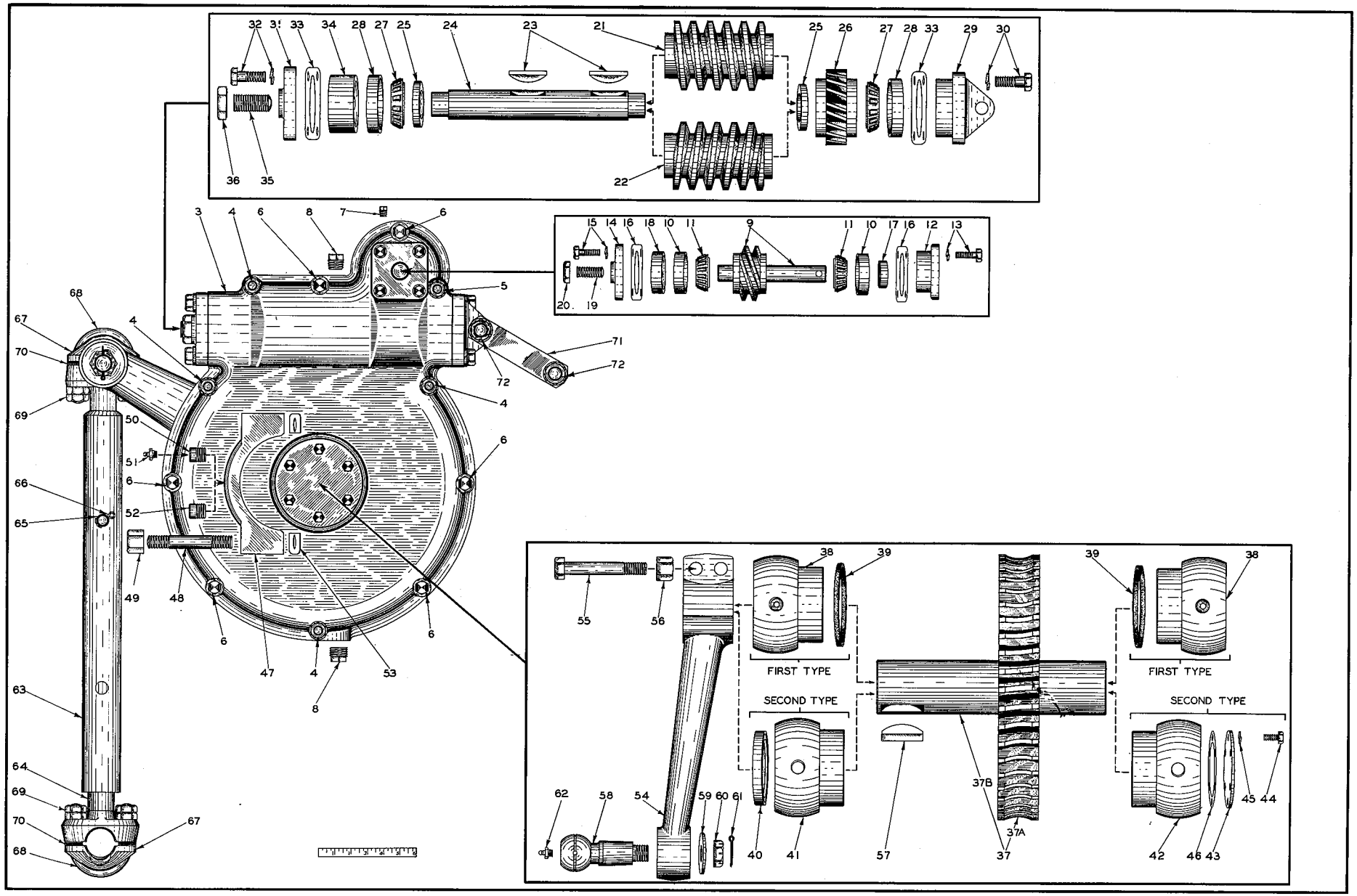

PLATE 1377B—MOLDBOARD LIFT

MOLDBOARD LIFT
(See Plate 1377B)

ITEM	PART NUMBER	QUANTITY AD3	QUANTITY AD4	DESCRIPTION	KIT NUMBER
1	604306	1	-	LIFT GROUP, moldboard - right (Consists of parts listed below)(Used on graders prior to #328)	
	053070	1	1	LIFT GROUP, moldboard - right (Consists of parts listed below)(Used on graders #328 and up)	
2	604307	1	-	LIFT GROUP, moldboard - left (Consists of parts listed below)(Used on graders prior to #328)	
	053069	1	1	LIFT GROUP, moldboard - left (Consists of parts listed below)(Used on graders #328 and up)	
3	602654	2	2	HOUSING ASSEMBLY (Each consists of 2 HOUSINGS, 4 STUDS 601825, 1 STUD 059812, 10 LOCKWASHERS 904208 and 10 NUTS 911028)	
4	601825	8	8	STUD (1/2"NC x 5-3/8")	
	911028	16	16	NUT, 1/2"NC	
	904208	16	16	LOCKWASHER, 1/2"	
5	059812	2	2	STUD (1/2"NC x 6")	
	911028	4	4	NUT, 1/2"NC	
	904208	4	4	LOCKWASHER, 1/2"	
6	910257	12	12	CAPSCREW, 1/2"NC x 4-3/4"	
	911028	12	12	NUT, 1/2"NC	
	904208	12	12	LOCKWASHER, 1/2"	
7	050903	2	2	PLUG, vent, gear housing	
8	912725	4	4	PLUG, pipe, 1/2"NPT	
9	601837	2	2	GEAR AND SHAFT ASSEMBLY, input (Serviced only as a unit)	
10	604383	4	4	CUP, input shaft bearing	
11	604382	4	4	CONE ASSEMBLY, input shaft bearing	
12	601466	2	2	CAP, input shaft rear bearing	
13	903631	8	8	CAPSCREW, 3/8"NC x 1-1/4"	
	904206	8	8	LOCKWASHER, 3/8"	
14	601467	2	2	CAP, input shaft front bearing	
15	903631	8	8	CAPSCREW, 3/8"NC x 1-1/4"	
	904206	8	8	LOCKWASHER, 3/8"	
16	601842	4	4	GASKET, input shaft bearing cap	
17	603010	2	2	SEAL, oil, input shaft	
18	601841	2	2	PLUG, input shaft bearing adjustment	
19	911230	2	2	SETSCREW, socket head, oval point, 5/8"NC x 1-1/2"	
20	911036	2	2	NUT, jam, 5/8"NC	
21	601455	2	-	WORM (right hand)(Used on graders prior to #328)	
22	601456	2	2	WORM (left hand)(Used on graders #328 and up)	
23	911238	4	4	KEY, #U woodruff, 7/16" x 2-3/4"	
24	602647	2	2	SHAFT, worm	
25	602641	4	4	SPACER, worm shaft	
26	601835	2	2	GEAR, spiral (20 teeth)	
27	604389	4	4	CONE ASSEMBLY, worm shaft bearing	
28	U-2573	4	4	CUP, worm shaft bearing	
29	601464	2	2	CAP, worm shaft inner bearing	
30	903792	8	8	CAPSCREW, 5/8"NC x 1-3/4"	
	904209	8	8	LOCKWASHER, 5/8"	

(Continued)

ITEM	PART NUMBER	QUANTITY AD3	QUANTITY AD4	DESCRIPTION	KIT NUMBER
31	601463	2	2	CAP, worm shaft outer bearing	
32	903792	8	8	CAPSCREW, 5/8"NC x 1-3/4"	
	904209	8	8	LOCKWASHER, 5/8"	
33	601839	4	4	GASKET, worm shaft bearing cap	
34	601838	2	2	PLUG, worm shaft bearing adjustment	
35	911228	2	2	SETSCREW, socket head, oval point, 1"NC x 2-1/4"	
36	911038	2	2	NUT, jam, 1"NC	
37	602650	2	-	GEAR AND SHAFT ASSEMBLY (Used on graders prior to #328)	
	602651	2	2	GEAR AND SHAFT ASSEMBLY (Used on graders #328 and up)	
37A	602652	2	-	GEAR only (right helix)(Graders prior to #328)	
	602653	2	2	GEAR only (left helix)(Graders #328 and up)	
	601833	4	4	KEY (woodruff, 3/4" x 2-7/16")	
37B	602646	2	2	SHAFT only	
38	------	4	-	BEARING, worm gear shaft (Used on graders prior to #328. Order 1 BEARING 050904 and 1 SEAL 031163)	
39	602640	4	-	SEAL, oil, worm gear shaft (cork)(Graders prior to #328)	
40	066309	2	2	SEAL, oil, worm gear shaft (Graders #328 and up)	
41	050904	2	2	BEARING, worm gear shaft - front (Graders #328 and up)	
42	050906	2	2	BEARING, worm gear shaft - rear (Graders #328 and up)	
43	050856	2	2	COVER, worm gear shaft rear bearing (Graders #328 and up)	
44	903775	12	12	CAPSCREW, 3/8"NC x 7/8"	
45	904206	12	12	LOCKWASHER, 3/8"	
46	050840	2	2	GASKET, worm gear shaft rear bearing cover (Graders #328 and up)	
47	601288	4	4	CAP, ball	
48	602207	8	-	STUD (3/4"NC x 5")(Graders prior to #354)	
	050913	8	8	STUD (3/4"NF x 5-3/16")(Graders #354 and up)	
49	911030	8	-	NUT, 3/4"NC (Graders prior to #354)	
	904369	8	-	LOCKWASHER, 3/4" (Graders prior to #354)	
	012767	8	8	NUT, high, 3/4"NF (Graders #354 and up)	
50	605307	4	-	NIPPLE, worm gear shaft lubricating (Graders prior to #328)	
51	914465	4	-	FITTING, lubricating, straight, 1/8"NPT (Graders prior to #328)	
52	605308	4	4	PIN, anchor, worm gear shaft bearing (Graders #328 and up)	
53	061181	24	24	SHIM, ball cap (1/32" thick. Use as req'd)	
	061182	40	40	SHIM, ball cap (.013" thick. Use as req'd)	
54	063988	2	2	CRANK, lifting (When required for graders prior to #2725 also order 2 CAPSCREWS 051655)	
55	051655	4	4	CAPSCREW, 3/4"NF x 5-1/4"	
56	012767	4	4	NUT, high, 3/4"NF	
57	601833	4	4	KEY, lifting crank (woodruff, 3/4" x 2-7/16")	
58	601972	2	2	PIN, ball, lifting crank	
59	900822	2	2	WASHER, plain, U S. std., 1"	
60	911174	2	2	NUT, jam, slotted, 1"NF	
61	900808	2	2	PIN, cotter, 1/8" x 1-1/2"	

(Continued)

MOLDBOARD LIFT (Cont'd)

ITEM	PART NUMBER	QUANTITY AD3	QUANTITY AD4	DESCRIPTION	KIT NUMBER
62	914465	2	2	FITTING, lubricating, straight, 1/8"NPT	
63	602691	2	2	TUBE, link	
64	603419	2	2	ROD, link	
65	602224	2	2	PIN, coupling, link rod and tube	
66	911179	2	2	PIN, cotter, 1/4" x 1-1/4"	
67	053986	4	4	CAP, socket	
68	605665	4	4	U-BOLT (5/8"NF)(When required for graders prior to #328 also order 4 NUTS 911049)	
69	911036	16	-	NUT, jam, 5/8"NC (Graders prior to #328)	
	911049	16	16	NUT, jam, 5/8"NF (Graders #328 and up)	
70	053992	32	32	SHIM, socket cap (Use as required)	
71	602642	4	4	STRAP, torque	
72	012526	4	4	CAPSCREW, 3/4"NF x 3-1/4"	
	904369	4	4	LOCKWASHER, 3/4"	
	911045	4	4	NUT, 3/4"NF	

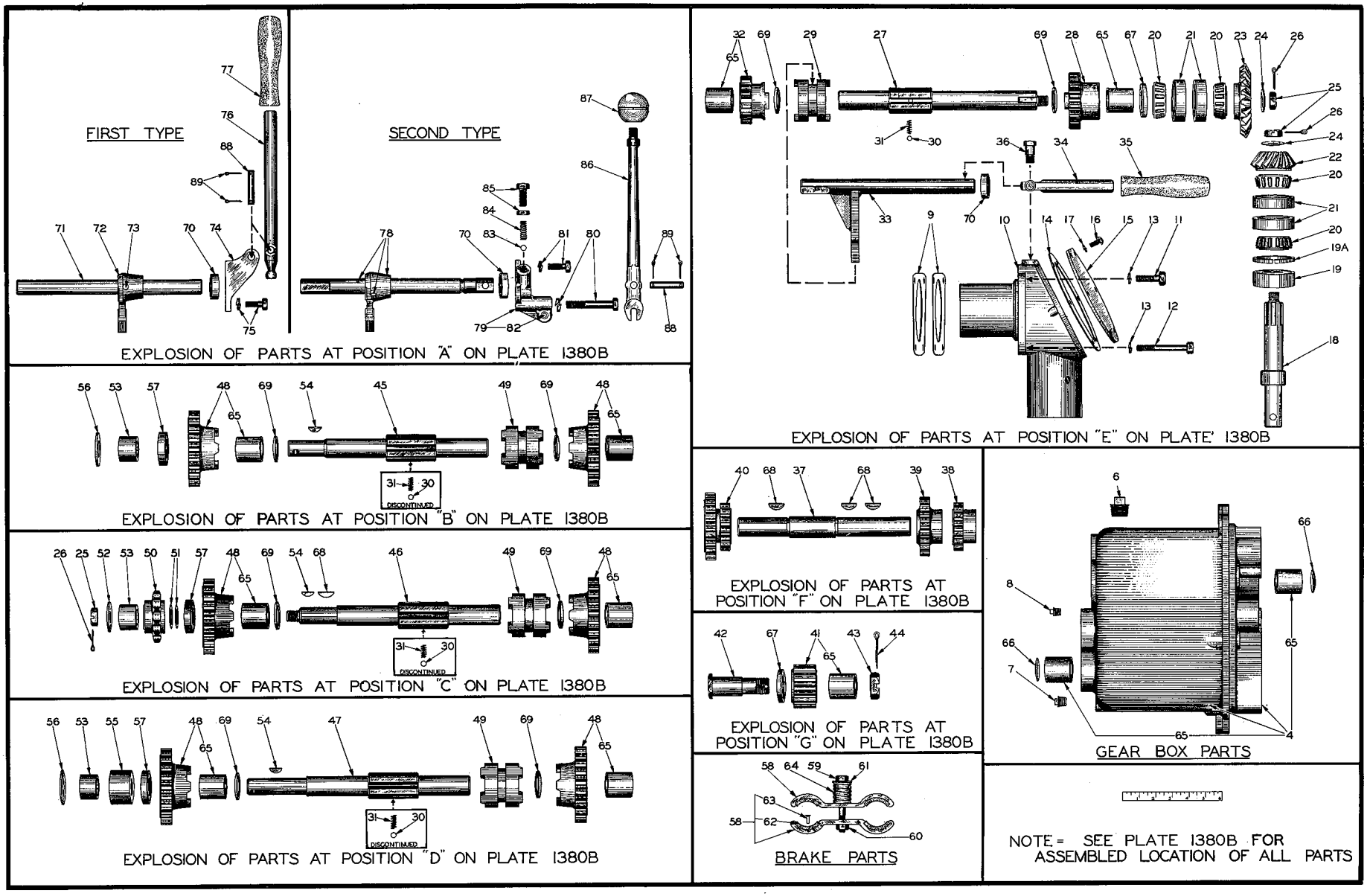

PLATE 1381B — POWER CONTROL BOX PARTS

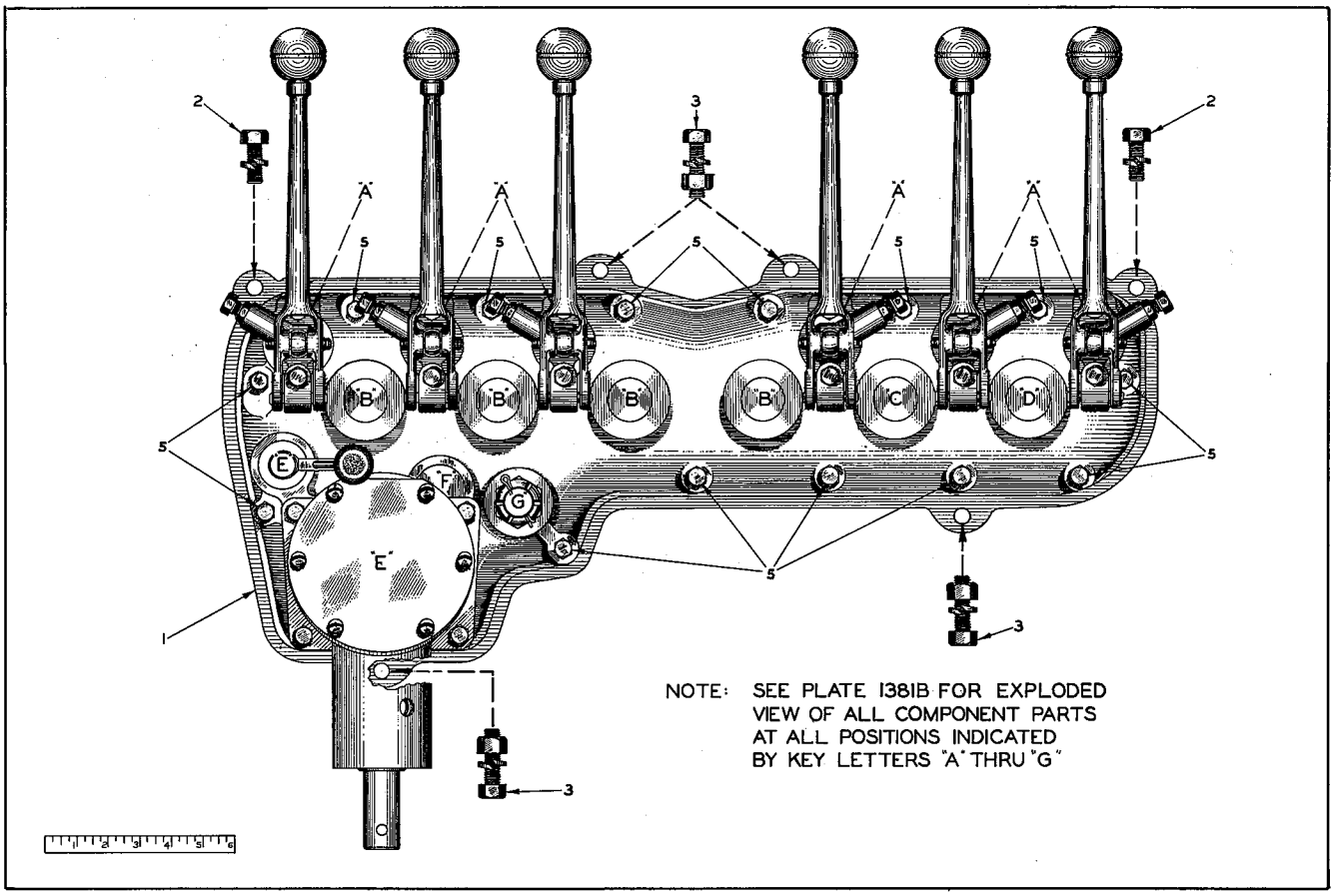

PLATE 1380B—CONTROL BOX ASSEMBLY

POWER CONTROL BOX
(See Plates 1380B and 1381B)

ITEM	PART NUMBER	QUANTITY AD3	QUANTITY AD4	DESCRIPTION	KIT NUMBER
1	604316	1	1	BOX ASSEMBLY - complete (Consists of items 2 thru 89)	
2	903638	2	2	CAPSCREW, 1/2"NC x 1-1/4"	
	904208	2	2	LOCKWASHER, 1/2"	
3	904541	4	4	CAPSCREW, 1/2"NC x 1-3/4"	
	911028	4	4	NUT, 1/2"NC	
	904208	4	4	LOCKWASHER, 1/2"	
4	605209	1	1	HOUSING ASSEMBLY (Consists of 1 HOUSING, 1 COVER, 2 dowel PINS, 4 CAPSCREWS 903632, 4 LOCKWASHERS 904206 and 15 BUSHINGS 600793)(When ordered for graders prior to #1050 also furnish 9 Expansion PLUGS 910014 to assure fit)	
5	903632	14	14	CAPSCREW, 3/8"NC x 1-1/2"	
	904206	14	14	LOCKWASHER, 3/8"	
6	051094	1	1	PLUG, vent (3/4"NPT)	
7	901653	1	1	PLUG, pipe, 3/8"NPT (oil drain)	
8	901651	1	1	PLUG, pipe, 1/8"NPT (oil check)	
9	055033	2	2	GASKET, bevel gear housing (Use as required)	
10	604173	1	1	HOUSING, bevel gear	
11	903631	2	2	CAPSCREW, 3/8"NC x 1-1/4"	
12	905667	2	2	CAPSCREW, 3/8"NC x 3"	
13	904206	4	4	LOCKWASHER, 3/8"	
14	604451	1	1	GASKET, bevel gear housing cover	

(Continued)

POWER CONTROL BOX (Cont'd)

ITEM	PART NUMBER	QUANTITY AD3	QUANTITY AD4	DESCRIPTION	KIT NUMBER
15	604450	1	1	COVER, bevel gear housing	
16	900575	6	6	SCREW, machine, 1/4"NC x 5/8"	
17	904204	6	6	LOCKWASHER, 1/4"	
18	604465	1	-	SHAFT, bevel gear (Both ends splined. Not illustrated)(Used on graders prior to #51)	
	605440	1	-	SHAFT, bevel gear (Used on graders #51 thru #1088)	
	056913	1	1	SHAFT, bevel gear (Used on graders #1089 and up)	
19	604439	1	1	SEAL, oil, bevel gear shaft	
19A	066879	1	1	RING, spacing, bevel gear shaft oil seal	
20	604923	4	4	CONE ASSEMBLY, bevel gear shaft bearing	
21	209983	4	4	CUP, bevel gear shaft bearing	
22	604456	1	-	GEAR, bevel (15 straight teeth)(Used on graders prior to #1089)	
	056942	1	1	GEAR, bevel (15 spiral teeth)(Used on graders #1089 and up)	
23	604457	1	-	GEAR, bevel (25 straight teeth)(Used on graders prior to #1089)	
	056940	1	1	GEAR, bevel (25 spiral teeth)(Used on graders #1089 and up)	
24	911100	2	2	WASHER, plain, SAE std., 5/8"	
25	913470	3	3	NUT, jam, slotted, 5/8"NF	
26	900806	3	3	PIN, cotter, 1/8" x 1"	
27	604466	1	-	SHAFT, bevel gear (Used on graders prior to #1089)	
	056985	1	1	SHAFT, bevel gear (Used on graders #1089 and up)	
28	604441	1	1	PINION, bevel gear shaft (18 teeth)	
29	604443	1	1	CLUTCH, sliding, bevel gear shaft	
30	905358	1	1	BALL, steel, 1/4" diam. (7 used prior to grader #328)	
31	600799	1	1	SPRING, clutch locking ball (7 used prior to grader #328)	
32	605126	1	1	PINION ASSEMBLY, bevel gear shaft (Includes 1BUSHING 600793)	
33	604459	1	1	YOKE, high-low shift	
34	604458	1	1	LEVER, high-low shift	
35	600940	1	1	GRIP, high-low shift lever	
36	602179	1	1	BOLT, high-low shift lever	
37	604446	1	1	SHAFT, counter	
38	604455	1	1	PINION, counter shaft (15 teeth)	
39	604442	1	1	GEAR, counter shaft (19 teeth)	
40	604452	1	1	GEAR, counter shaft (15 teeth and 22 teeth)	
41	605128	1	1	PINION ASSEMBLY, reverse (Includes 1 BUSHING 600793)	
42	604448	1	1	STUD, reverse pinion	
43	911174	1	1	NUT, jam, slotted, 1"NF	
44	900812	1	1	PIN, cotter, 3/16" x 1-3/4"	
45	604454	4	-	SHAFT, driving, circle turn, left circle lift, front wheel lean and scarifier lift (Used on graders prior to #328)	
	050345	4	4	SHAFT, driving, circle turn, left circle lift, front wheel lean and scarifier lift (Used on graders #328 and up)	

(Continued)

ITEM	PART NUMBER	QUANTITY AD3	QUANTITY AD4	DESCRIPTION	KIT NUMBER
46	604453	1	-	SHAFT, driving, circle side shift (Used on graders prior to #328)	
	051138	1	1	SHAFT, driving, circle side shift (Used on graders #328 and up)	
47	605304	1	-	SHAFT, driving, right circle lift (Used on graders prior to #328)	
	051079	1	1	SHAFT, driving, right circle lift (Used on grader #328 and up)	
48	603431	12	-	GEAR ASSEMBLY, clutch (3-jaw type. Includes 1 BUSHING 600793)(Used on graders prior to #1033)	
	055456	12	12	GEAR ASSEMBLY, clutch (4-jaw type. Includes 1 BUSHING 600793)(Used on graders #1033 and up)	
49	604447	6	-	CLUTCH, sliding (3-jaw type)(Used on graders prior to #328)	
	051137	6	-	CLUTCH, sliding (3-jaw type)(Used on graders #328 thru #1032)	
	055420	6	6	CLUTCH, sliding (4-jaw type)(Used on graders #1033 and up)	
50	604373	1	1	SPROCKET, driving, side shift (12 teeth)	
51	604438	5	5	SHIM, aligning, side shift driving sprocket (Use as req'd)	
52	900819	1	1	WASHER, plain, U.S. std., 5/8"	
53	602189	6	6	COLLAR, driving shaft brake	
54	911233	6	6	KEY, #11 woodruff, 3/16" x 7/8"	
55	604952	1	1	SPACER, right circle lift driving shaft	
56	911159	5	5	WASHER, plain, SAE std., 1"	
57	044741	6	6	SEAL, oil, driving shafts	
58	604954	6	6	SHOE ASSEMBLY, driving shaft brake (Includes items 62 and 63)	
59	013059	3	-	CAPSCREW, 3/8"NC x 2" (Graders prior to #328)	
	905667	3	3	CAPSCREW, 3/8"NC x 3" (Graders #328 and up)	
60	911026	3	3	NUT, 3/8"NC	
	904206	3	-	LOCKWASHER, 3/8" (Graders prior to #328)	
61	900817	3	3	WASHER, plain, U.S. std., 3/8" (Graders #328 and up)	
62	053991	12	12	LINING, brake shoe	
63	912312	12	12	RIVET, split, ctsk. head, steel, brass plated, 5/32" x 1/2"	
64	516686	3	-	SPRING, brake shoe (3/4" long)(Used on graders prior to #328. Can be replaced by 1 SPRING 050972 and 1 CAPSCREW 905667)	
	050972	3	3	SPRING, brake shoe (1-5/16" long)(Used on graders #328 and up)	
65	600793	30	30	BUSHING, control box and gears	
66	910007	9	-	PLUG, expansion, 1-3/8" diameter (Graders prior to #1050)	
	910014	9	9	PLUG, expansion, 1-1/2" diameter (Graders #1050 and up)	
67	600899	2	2	WASHER, bevel gear shaft and reverse pinion stud	
68	905126	4	4	KEY, #15 woodruff, 1/4" x 1"	
69	600909	14	14	WASHER, thrust	
70	041516	7	7	SEAL, oil, shifting shafts	
				NOTE: Items 71 thru 77 were used only on graders prior to #328	
71	604951	6	-	SHAFT, shifting yoke	
72	604436	6	-	YOKE, shifting	
73	600923	6	-	PIN, straight	

(Continued)

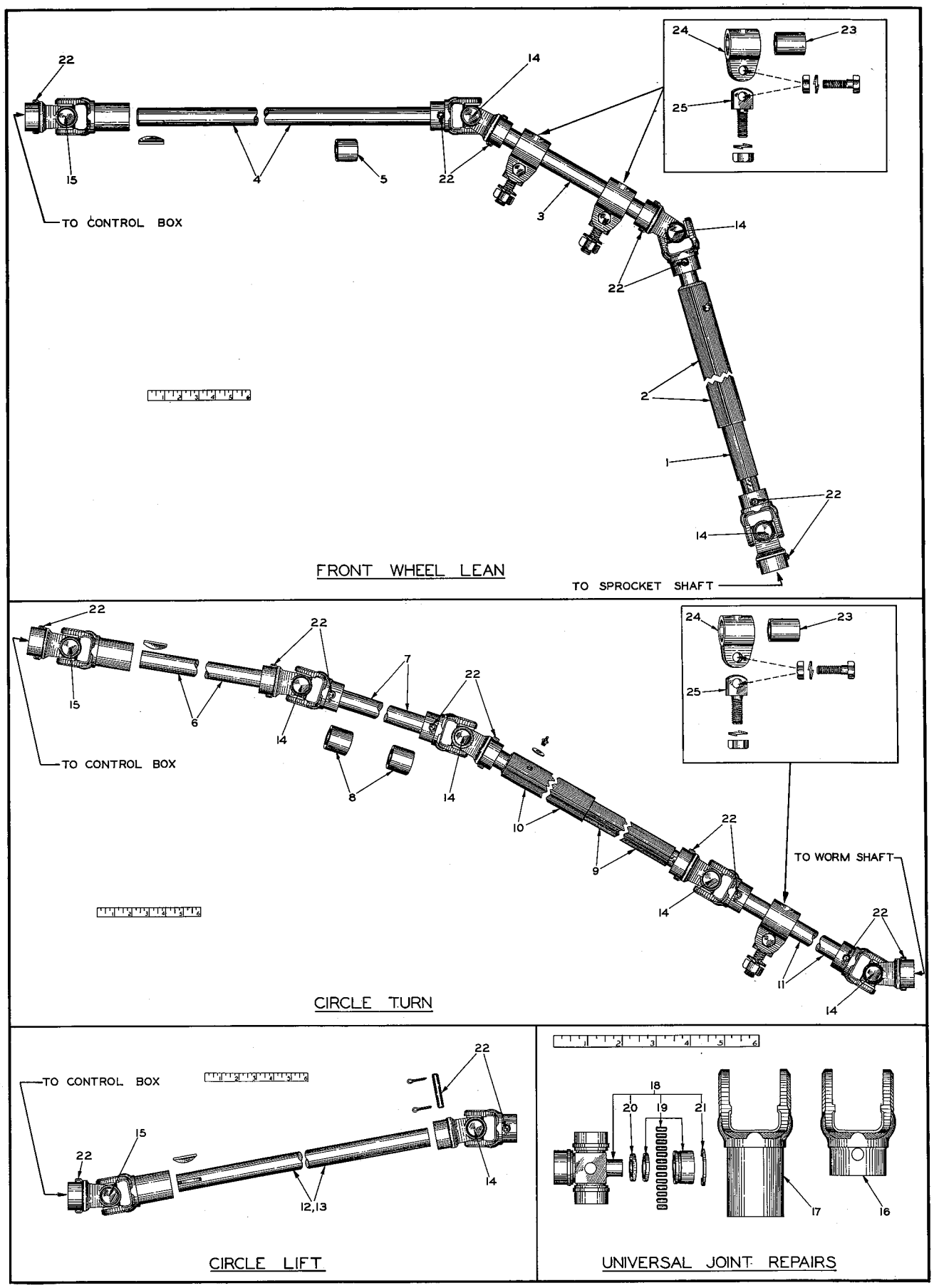

PLATE 1997——POWER CONTROL SHAFTS

POWER CONTROL BOX (Cont'd)

ITEM	PART NUMBER	QUANTITY AD3	QUANTITY AD4	DESCRIPTION	KIT NUMBER
74	604461	6	-	BRACKET, operating lever	
75	903630	12	-	CAPSCREW, 3/8"NC x 1"	
	904206	12	-	LOCKWASHER, 3/8"	
76	604460	6	-	LEVER, operating	
77	600940	6	-	GRIP, operating lever	
				NOTE: Items 78 thru 87 were used only on graders #328 and up.	
78	051003	3	3	SHAFT ASSEMBLY, shifting - left (1 SHAFT, 1 YOKE, 1 PIN)	
	051004	3	3	SHAFT ASSEMBLY, shifting - right (1 SHAFT, 1 YOKE, 1 PIN)	
79	051028	3	3	BRACKET ASSEMBLY, operating lever - left (Includes item 82)	
	051027	3	3	BRACKET ASSEMBLY, operating lever - right (Includes item 82)	
80	903636	6	6	CAPSCREW, 3/8"NC x 2-3/4"	
	904206	6	6	LOCKWASHER, 3/8"	
81	903630	6	6	CAPSCREW, 3/8"NC x 1"	
	904206	6	6	LOCKWASHER, 3/8"	
82	051001	6	6	PIN, operating lever pivot	
83	905360	6	6	BALL, steel, 3/8" diam.	
84	050975	6	6	SPRING, operating lever ball	
85	913729	6	6	CAPSCREW, 7/16"NF x 1"	
	910876	6	6	NUT, jam, 7/16"NF	
86	051002	6	6	LEVER, operating	
87	U-171	6	6	KNOB, operating lever	
88	601935	6	6	PIN, operating lever pivot	
89	900805	12	12	PIN, cotter, 1/8" x 3/4"	

POWER CONTROL SHAFTS
(See Plate 1997)

1	604543	1	1	SHAFT, sliding, front wheel lean control - male (17-1/2" long)	
		1	1		
2	604541	1	1	SHAFT, sliding, front wheel lean control - female (16-3/4" long)	
	915275	1	1	FITTING, lubricating, 67-1/2°, 1/8"NPT	
3	604540	1	1	SHAFT, front wheel lean control (11" long)	
4	604544	1	1	SHAFT, front wheel lean control (136-1/2" long)	
	911273	1	1	KEY, #127 woodruff, 1/4" x 2-1/8"	
5	604552	1	1	BEARING, plain, front wheel lean control shaft	
6	604537	1	1	SHAFT, circle turn control (21-1/4" long)	
	911273	1	1	KEY, #127 woodruff, 1/4" x 2-1/8"	
7	604538	1	1	SHAFT, circle turn control (26-1/4" long)	
8	604553	2	2	BEARING, plain, circle turn control shafts	
9	602845	1	1	SHAFT, sliding, circle turn control - male (23-1/2" long) (Graders prior to #1765; also graders #1906 thru #1969)	
	064086	1	1	SHAFT, sliding, circle turn control - male (27-3/4" long) (Graders #1765 thru #1905 and graders #1970 and up)	

(Continued)

POWER CONTROL SHAFTS (Cont'd)

ITEM	PART NUMBER	QUANTITY AD3	QUANTITY AD4	DESCRIPTION	KIT NUMBER
10	602342	1	1	SHAFT, sliding, circle turn control - female (25" long) (Graders prior to #1765; also graders #1906 thru #1969)	
	064088	1	1	SHAFT, sliding, circle turn control - female (29-1/2" long) (Graders #1765 thru #1905 and graders #1970 and up)	
	912808	1	1	FITTING, lubricating, straight, 1/4"NF	
	911114	1	1	WASHER, plain, SAE std., 1/4"	
11	604539	1	1	SHAFT, circle turn control (13" long)(Graders prior to #1765; also graders #1906 thru #1969)	
	064085	1	1	SHAFT, circle turn control (10-3/4" long)(Graders #1765 thru #1905 and graders #1970 and up)	
12	604536	1	1	SHAFT, circle lift control - left (43" long)	
	911273	1	1	KEY, #127 woodruff, 1/4" x 2-1/8"	
13	602836	1	1	SHAFT, circle lift control - right (41-1/2" long)	
	911273	1	1	KEY, #127 woodruff, 1/4" x 2-1/8"	
14	053121	9	9	JOINT ASSEMBLY, universal (Includes items 16 and 18 thru 21)	
15	053123	4	4	JOINT ASSEMBLY, universal (Includes items 16 thru 21)	
				NOTE: Universal Joint (item 14) furnished as original equipment on graders prior to serial No. 680 and Universal Joint (item 15) furnished as original equipment on graders prior to serial No. 770, cannot be repaired in the field and must be replaced as complete units. Do not order items 16 thru 21 for such machines unless the late type joints have since been installed.	
16	053119	22	22	YOKE, universal joint (plain)	
17	053122	4	4	YOKE, universal joint (keywayed)	
18	053120	13	13	SPIDER KIT, universal joint (Each consists of 1 SPIDER, 4 WASHERS 055733, 4 BEARING ASSEMBLIES 053114 and 4 RINGS 053240)	
19	053114	52	52	BEARING ASSEMBLY, universal joint (Each consists of 1 CUP, 15 ROLLERS, 1 RETAINER)	
20	055733	52	52	WASHER, sealing, universal joint bearing (cork)	
21	053240	52	52	RING, snap, universal joint bearing	
22	601935	22	22	PIN, universal joint (3/8" x 2")	
	900805	44	44	PIN, cotter, 1/8" x 3/4"	
23	602170	3	3	BUSHING, control shaft bearing (oilite bronze)	
24	602172	3	3	BEARING ASSEMBLY, control shaft (Includes item 23)	
	904541	3	3	CAPSCREW, 1/2"NC x 1-3/4"	
	911028	3	3	NUT, 1/2"NC	
	904208	3	3	LOCKWASHER, 1/2"	
25	064469	2	2	BOLT, eye, front wheel lean control shaft bearing (1-7/8" long)	
	602328	1	1	BOLT, eye, circle turn control shaft bearing (1-5/8" long)	
	911029	3	3	NUT, 5/8"NC	
	904209	3	3	LOCKWASHER, 5/8"	

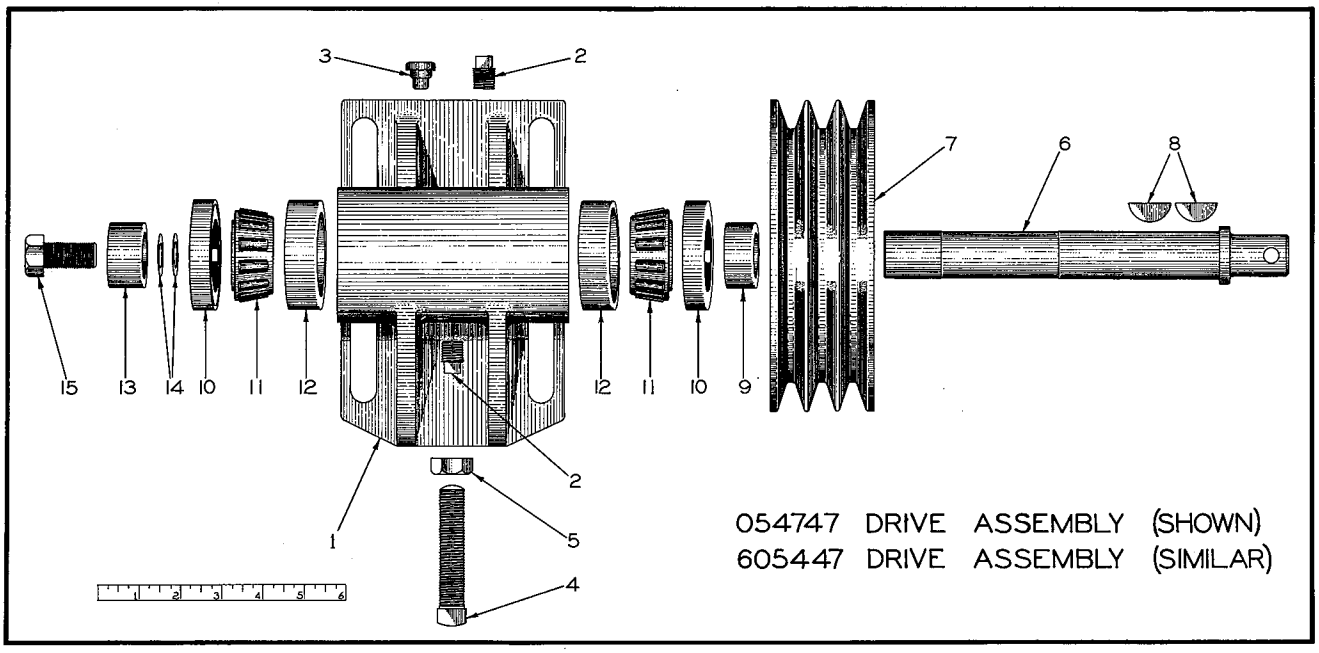

PLATE 1752——POWER TAKE-OFF PARTS

POWER TAKE-OFF PARTS
(See Plate 1752)

605447 DRIVE ASSEMBLY (Early AD3 Graders)
054747 DRIVE ASSEMBLY (Early AD3 and AD4 Graders)

See page 197

ITEM	PART NUMBER	QUANTITY 605447	QUANTITY 054747	DESCRIPTION	KIT NUMBER
1	604556	1	-	HOUSING (Not illustrated)	
	605837	-	1	HOUSING	
2	901653	2	2	PLUG, pipe, 3/8"NPT	
3	605132	1	1	VENT, air	
4	900668	1	1	SETSCREW, square head, oval point, 5/8"NC x 3"	
5	911036	1	1	NUT, jam, 5/8"NC	
6	604558	1	1	SHAFT	
7	604223	1	1	PULLEY	
8	905126	2	2	KEY, #15 woodruff, 1/4" x 1"	
9	604559	1	1	SPACER	
10	605133	2	2	SEAL, oil	
11	605176	2	2	CONE ASSEMBLY, shaft bearing	
12	605177	2	2	CUP, shaft bearing	
13	605047	1	1	CAP, bearing adjustment	
14	605048	12	12	SHIM, adjusting, shaft bearing (Use as required)	
15	060788	1	1	CAPSCREW (hex head, left hand thread, 5/8"NF x 1-1/4")	

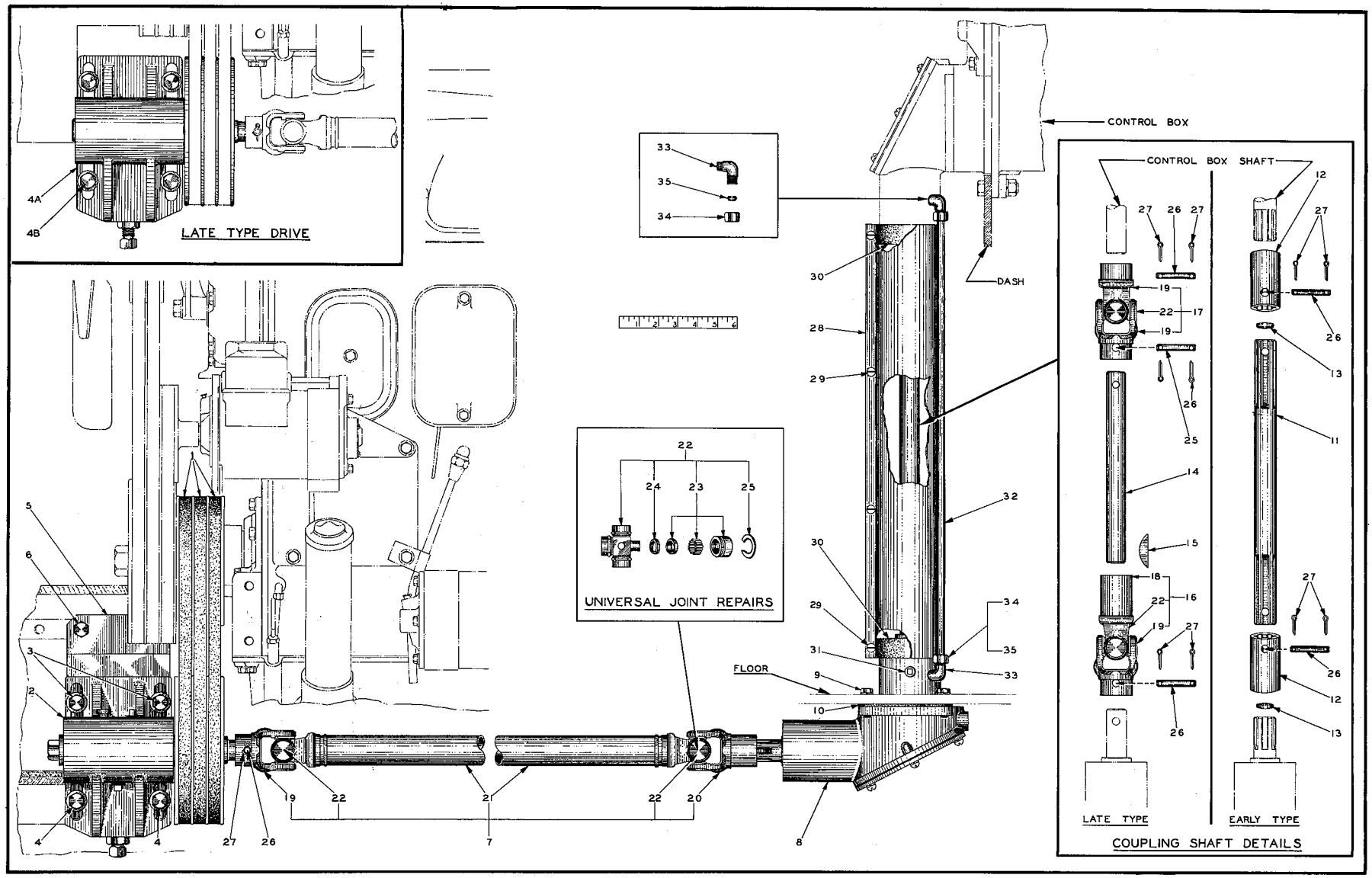

PLATE 1751A——POWER TAKEOFF GROUP

POWER TAKE-OFF GROUP
(See Plate 1751A)

ITEM	PART NUMBER	QUANTITY AD3	QUANTITY AD4	DESCRIPTION	KIT NUMBER
1	604929	3	3	BELT, drive (V-type, 21/32" wide x 47" long)	
2	605447	1	-	DRIVE ASSEMBLY, power take-off (Used on graders prior to #340. See page 195 for repair parts)	
	054747	1	1	DRIVE ASSEMBLY, power take-off (Used on graders #340 thru #3313 excluding #3311)(See page 195 for repair parts)	
3	903638	2	2	CAPSCREW, 1/2"NC x 1-1/4"	
	910244	2	2	WASHER, plain, SAE std., 1/2"	
4	903638	2	2	CAPSCREW, 1/2"NC x 1-1/4" (Graders prior to #1152)	
	903642	2	2	CAPSCREW, 1/2"NC x 2-1/2" (Graders after #1151)	
	911028	2	2	NUT, 1/2"NC (Graders after #1151)	
	904208	2	2	LOCKWASHER, 1/2"	
	910244	2	2	WASHER, plain, SAE std., 1/2"	
4A	061875	1	1	DRIVE ASSEMBLY, power take-off (See page 199 for repair parts)(Graders #3314 and up, including #3311)	
4B	903638	4	4	CAPSCREW, 1/2"NC x 1-1/4"	
	910244	4	4	WASHER, plain, SAE std., 1/2"	
5	061173	1	1	PLATE, adapting, power take-off drive (Graders #1152 thru #3313, excluding #3311)	
6	903638	2	2	CAPSCREW, 1/2"NC x 1-1/4"	
	904208	2	2	LOCKWASHER, 1/2"	
7	604560	1	-	JOINT ASSEMBLY, universal (Serviced only as a unit)(Used on graders prior to #492, excluding graders #367 thru #412. Order JOINT ASSEMBLY 053126)	
	053126	1	-	JOINT ASSEMBLY, universal (61-1/4" long. Includes items 19 thru 25)(Used on graders after #491. Including graders #367 thru #412)	
	061177	-	1	JOINT ASSEMBLY, universal (67" long. Includes items 19 thru 25)	
8	604566	1	1	HOUSING ASSEMBLY, bevel gear (When required for graders prior to #51 following parts must also be furnished to assure fit: 1 SHAFT 605439, 1 KEY 911273, 1 JOINT ASSY. 053123, 1 JOINT ASSY. 053121 and 1 SHAFT 605440)(See page 200 for repair parts)	
9	903633	4	-	CAPSCREW, 3/8"NC x 1-3/4" (Graders prior to #454)	
	903631	4	4	CAPSCREW, 3/8"NC x 1-1/4" (Graders #454 and up)	
	904206	4	4	LOCKWASHER, 3/8"	
	911026	4	-	NUT, 3/8"NC (Graders prior to #454)	
	900817	4	-	WASHER, plain, U.S. std., 3/8" (Graders prior to #454)	
10	605483	1	1	GASKET, bevel gear housing to floor plate	
11	604564	1	-	SHAFT, vertical coupling (Used on graders prior to #51)	
12	------	2	-	COUPLING, vertical coupling shaft (Used on graders prior to #51. Order 1 SHAFT 605439, 2 SHAFTS 605440, 1 KEY 911273, 1 JOINT ASSEMBLY 053121 and 1 JOINT ASSY. 053123)	
13	604561	2	-	PAD, vertical coupling shaft (rubber)(Graders prior to #51)	
14	605439	1	1	SHAFT, vertical coupling (Graders #51 and up)	
15	911273	1	1	KEY, #127 woodruff, 1/4" x 2-1/8" (Graders #51 and up)	
16	604551	1	-	JOINT ASSEMBLY, universal (Serviced only as a unit)(Used on graders #51 thru #719. Order JOINT ASSY. 053123)	
	053123	1	1	JOINT ASSEMBLY, universal (Includes items 18, 19 and 22) (Used on graders #720 and up)	
17	604550	1	-	JOINT ASSEMBLY, universal (Serviced only as a unit)(Used on graders #51 thru #719. Order JOINT ASSY. 053121)	
	053121	1	1	JOINT ASSEMBLY, universal (Includes items 19 and 22)(Used on graders after #719)	

(Continued)

ITEM	PART NUMBER	QUANTITY AD3	QUANTITY AD4	DESCRIPTION	KIT NUMBER
				NOTE: Items 18 thru 25 are repairs for universal JOINT ASSEMBLIES 053121, 053123, 053126 and 061177. These parts will not fit old style JOINT ASSEMBLIES 604550, 604551 and 604560, which must be replaced as complete units.	
18	053122	1	1	YOKE, universal joint (keywayed)	
19	053119	4	4	YOKE, universal joint (plain)	
20	053124	1	1	YOKE, universal joint (splined)	
21	053125	1	-	TUBE, universal joint (55-7/8" long)	
	061178	-	1	TUBE, universal joint (61-5/8" long)	
22	053120	4	4	SPIDER KIT, universal joint (Each consists of 1 SPIDER 4 WASHERS 055733, 4 BEARING ASSEMBLIES 053114 and 4 RINGS 053240)	
23	053114	16	16	BEARING ASSEMBLY, universal joint (Each consists of 1 CUP, 15 ROLLERS and 1 RETAINER)	
24	055733	16	16	WASHER, sealing, universal joint bearing (cork)	
25	053240	16	16	RING, snap, universal joint bearing	
26	601935	4	4	PIN, coupling (3 used on graders prior to #51)	
27	900805	8	8	PIN, cotter, 1/8" x 3/4" (6 used prior to grader #51)	
28	604562	1	1	GUARD, vertical coupling shaft	
29	900578	4	4	SCREW, machine, 1/4"NC x 1-1/4"	
	911024	4	4	NUT, 1/4"NC	
	904204	4	4	LOCKWASHER, 1/4"	
30	604563	2	2	WEBBING, vertical coupling shaft guard	
31	901651	1	1	PLUG, pipe, 1/8"Npt	
				NOTE: The following items were used only on graders #1068 and up although they may be installed on prior graders by adding tapped hole in Control Box Bevel Gear Housing (See Service Bulletin S-427)	
32	061185	1	1	TUBE, oil	
33	915279	2	2	ELBOW, male, compression, 3/8" tube, 1/4"NPT	
34	912065	2	2	NUT, compression fitting, 3/8" tube	
35	912588	2	2	SLEEVE, compression fitting, 3/8" tube	

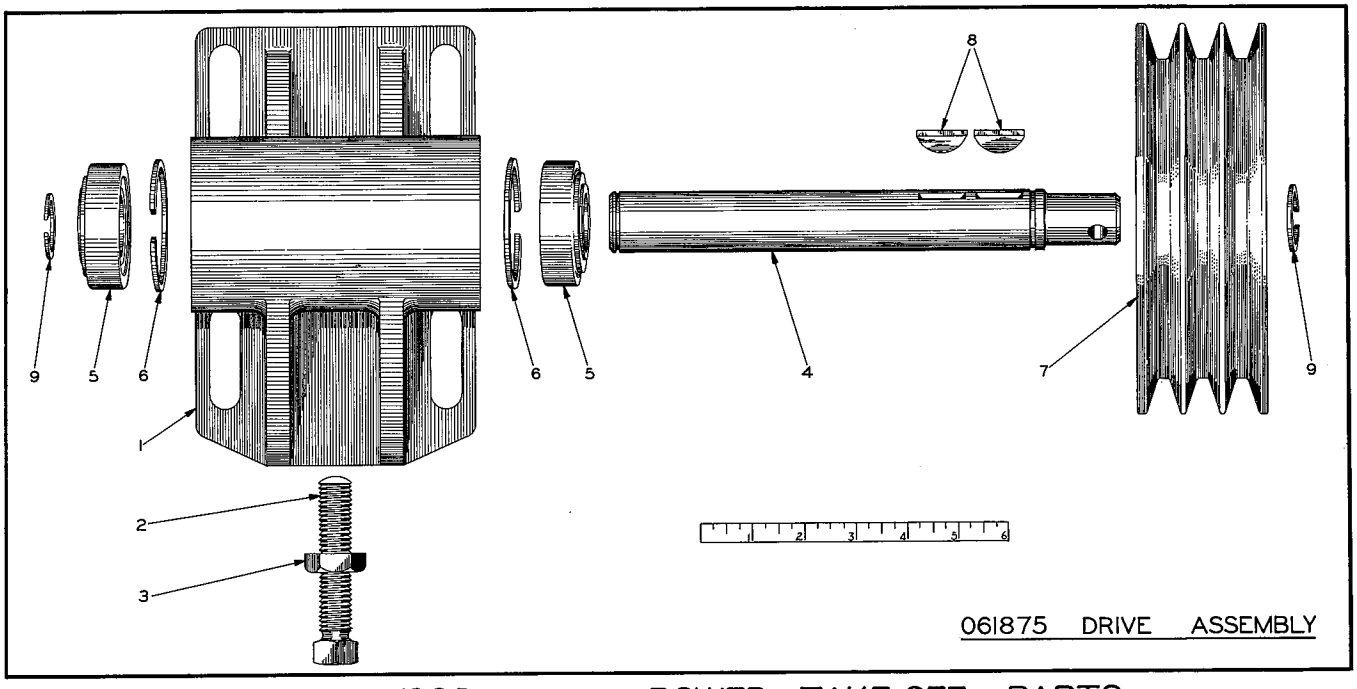

PLATE 1885 ——— POWER TAKE-OFF PARTS

POWER TAKE-OFF PARTS
(See Plate 1885)

061875 DRIVE ASSEMBLY (See page 197)

ITEM	PART NUMBER	QTY.	DESCRIPTION	KIT NUMBER
1	061876	1	HOUSING	
2	900668	1	SETSCREW, sq-hd., oval point, 5/8"NC x 3"	
3	911036	1	NUT, jam, 5/8"NC	
4	061878	1	SHAFT	
5	069951	2	BEARING, ball (sealed type)	
6	050291	2	RING, bearing retaining	
7	065498	1	PULLEY	
8	905126	2	KEY, #15 woodruff, 1/4" x 1"	
9	052224	2	RING, shaft retaining	

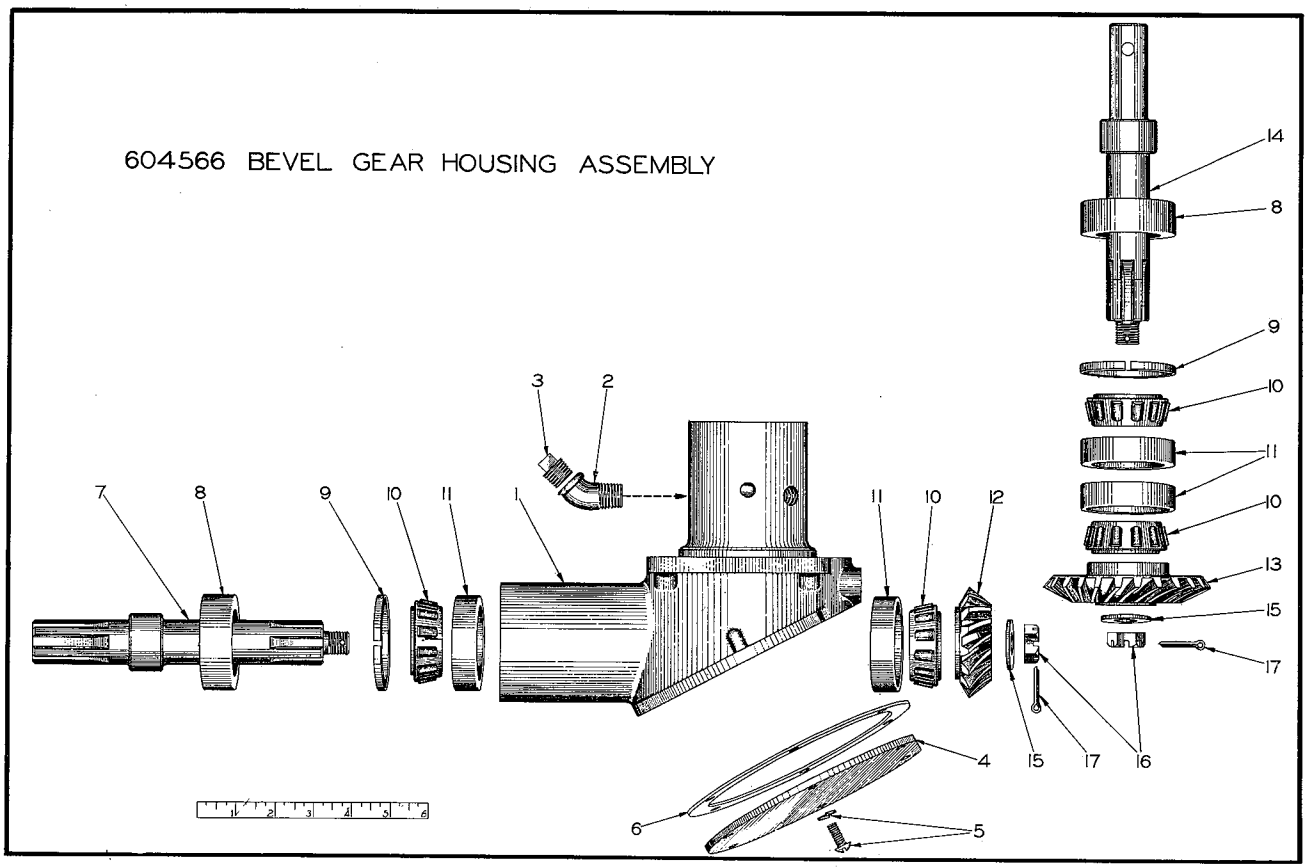

PLATE 1753A—POWER TAKE-OFF PARTS

POWER TAKE-OFF PARTS
(See Plate 1753A)

604566 BEVEL GEAR HOUSING ASSEMBLY (See Page 197)

ITEM	PART NUMBER	QUANTITY AD3	QUANTITY AD4	DESCRIPTION	KIT NUMBER
1	604173	1	-	HOUSING (Used on graders prior to #454)	
	055794	1	1	HOUSING (Used on graders #454 and up)	
2	910149	1	-	ELBOW, street, 45°, 3/8"NPT (Graders prior to #1068)	
3	605207	1	-	PLUG, filling and venting (Graders prior to #1068)	
4	604450	1	1	COVER, gear housing	
5	900575	6	6	SCREW, machine, 1/4"NC x 5/8"	
	904204	6	6	LOCKWASHER, 1/4"	
6	604451	1	1	GASKET, housing cover	
7	604465	1	-	SHAFT, horizontal (Used on graders prior to #1089)	
	056941	1	1	SHAFT, horizontal (Used on graders #1089 and up)	
8	604439	2	2	SEAL, oil	
9	066879	2	2	RING, seal spacing (Started with grader #3226)	
10	604923	4	4	CONE ASSEMBLY, shaft bearing	
11	209983	4	4	CUP, shaft bearing	
12	604456	1	-	GEAR, horizontal shaft (15 straight bevel teeth)(Used on graders prior to #1089)	
	056942	1	1	GEAR, horizontal shaft (15 spiral bevel teeth)(Used on graders #1089 and up)	

(Continued)

POWER TAKE-OFF PARTS (Cont'd)

ITEM	PART NUMBER	QUANTITY AD3	QUANTITY AD4	DESCRIPTION	KIT NUMBER
13	604457	1	-	GEAR, vertical shaft (25 straight bevel teeth)(Used on graders prior to #1089)	
	056940	1	1	GEAR, vertical shaft (25 spiral bevel teeth)(Used on graders #1089 and up)	
14	604465	1	-	SHAFT, vertical (Used on graders prior to #51)	
	605440	1	-	SHAFT, vertical (Used on graders #51 thru #1088)	
	056939	1	1	SHAFT, vertical (Used on graders #1089 and up)	
15	911100	2	2	WASHER, plain, SAE std., 5/8"	
16	913470	2	2	NUT, jam, slotted, 5/8"NF	
17	900806	2	2	PIN, cotter, 1/8" x 1"	

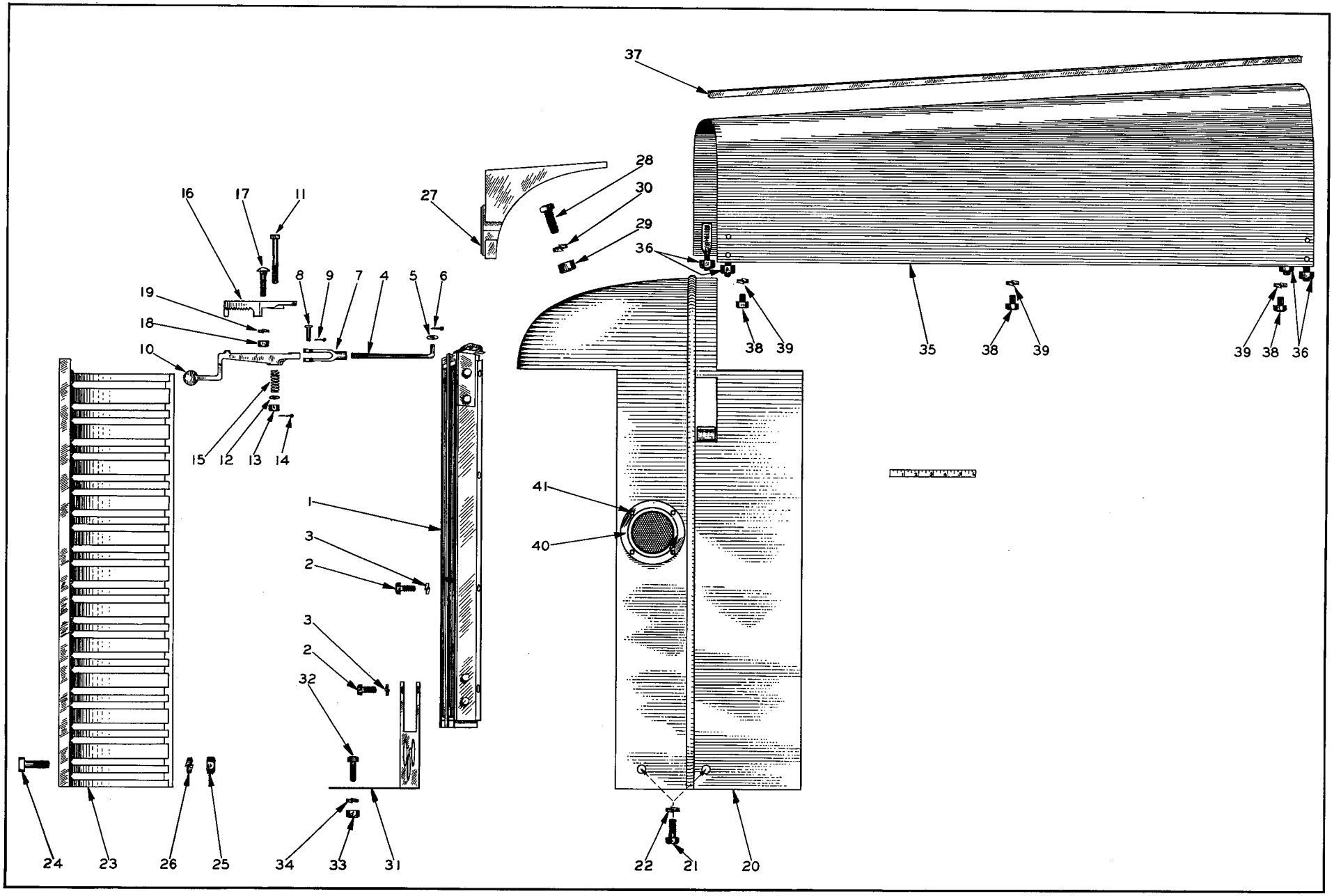

PLATE 1329A —— RADIATOR SHELL, SHUTTER AND HOOD (EARLY AD3 GRADERS)

RADIATOR SHUTTER
(See Plate 1329A)

USAGE: Model AD3 Graders prior to serial No. 328.

ITEM	PART NUMBER	QTY.	DESCRIPTION	KIT NUMBER
1	041638	1	SHUTTER ASSEMBLY, radiator (Serviced only as a unit)	
2	903775	8	CAPSCREW, 3/8"NC x 7/8"	
3	904206	8	LOCKWASHER, 3/8"	
4	604527	1	ROD, control	
5	910335	1	WASHER, plain, SAE std., 5/16"	
6	900942	1	PIN, cotter, 3/32" x 5/8"	
7	042676	1	YOKE, control rod	
8	033067	1	PIN, control rod yoke	
9	900942	1	PIN, cotter, 3/32" x 1/2"	
10	604220	1	LEVER, control	
11	040705	1	BOLT (3/8"NC x 3")	
12	911115	1	WASHER, plain, SAE std., 3/8"	
13	911026	1	NUT, 3/8"NC	
14	900942	1	PIN, cotter, 3/32" x 5/8"	
15	040704	1	SPRING, operating lever	
16	040701	1	BRACKET, operating lever	
17	911752	2	BOLT, carriage, 3/8"NC x 1-3/8"	
18	911026	2	NUT, 3/8"NC	
19	904206	2	LOCKWASHER, 3/8"	

RADIATOR SHELL AND HOOD
(See Plate 1329A)

USAGE: Model AD3 Graders prior to serial No. 328.

20	604506	1	SHELL, radiator	
21	035061	4	CAPSCREW, 1/2"NC x 1-1/4"	
22	904208	4	LOCKWASHER, 1/2"	
23	604518	1	GRILLE, radiator protecting	
24	604524	8	T-BOLT	
25	911027	8	NUT, 7/16"NC	
26	904207	8	LOCKWASHER, 7/16"	
27	041639	1	MONOGRAM, "A-C", radiator shell	
28	912112	2	BOLT, machine, 1/2"NC x 1-1/2"	
29	911028	2	NUT, 1/2"NC	
30	904208	2	LOCKWASHER, 1/2"	
31	604528	1	SHIELD, radiator	
32	903631	3	CAPSCREW, 3/8"NC x 1-1/4"	
33	911026	3	NUT, 3/8"NC	
34	904206	3	LOCKWASHER, 3/8"	
35	604529	1	HOOD, engine	
36	911026	4	NUT, 3/8"NC	
37	604532	1	BAR, stiffening, engine hood	
38	903627	3	CAPSCREW, 3/8"NC x 1/2"	
39	904206	3	LOCKWASHER, 3/8"	
40	053830	2	MARKER, ruby	
41	901171	4	SCREW, machine, #10-24NC x 3/8"	
	904203	4	LOCKWASHER, #10	

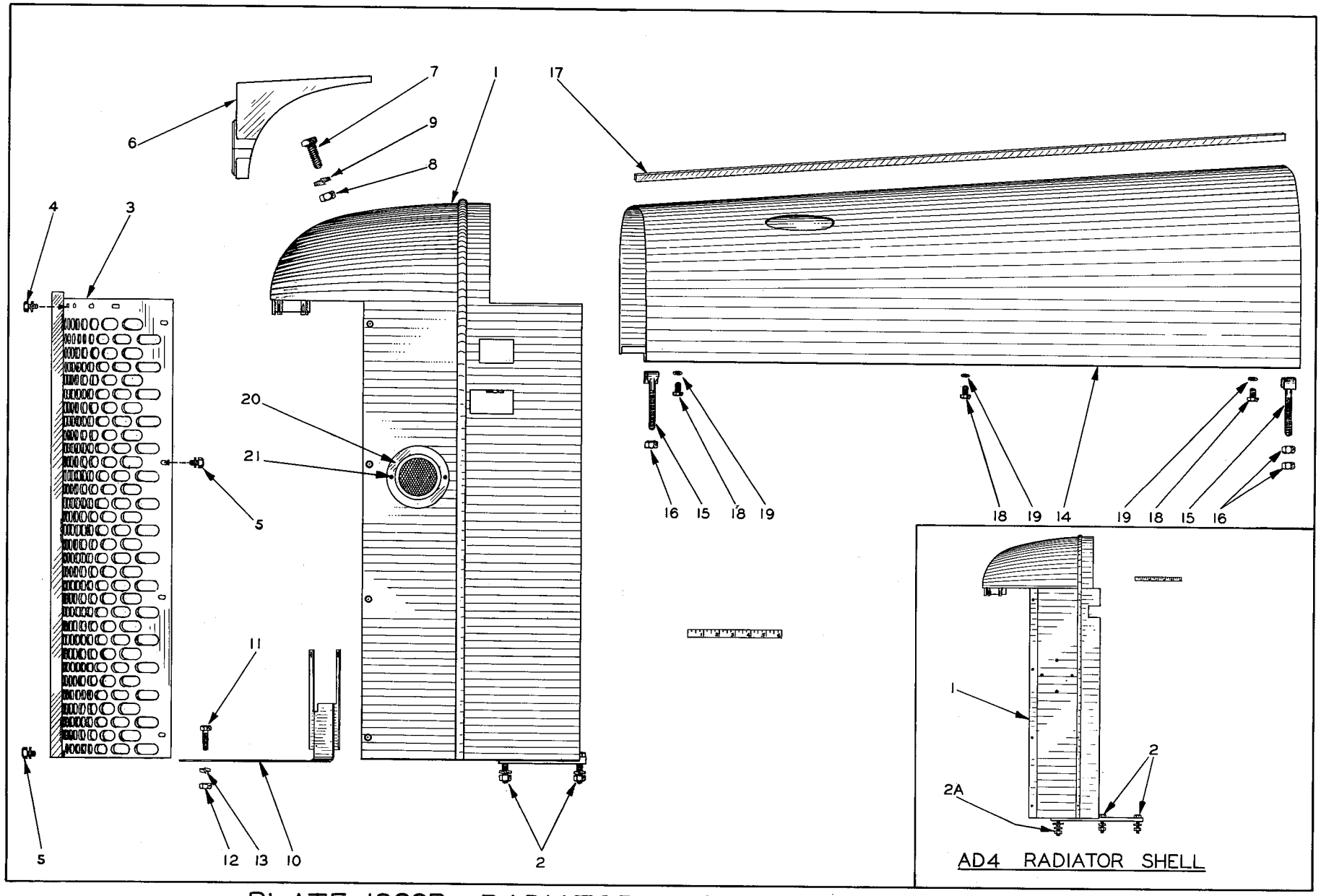

PLATE 1328B—RADIATOR SHELL AND HOOD (AD3 & AD4)

RADIATOR SHELL AND HOOD
(See Plate 1328B)

USAGE: Model AD4 Graders and Model AD3 Graders serial No. 327 and up.

ITEM	PART NUMBER	QUANTITY AD3	QUANTITY AD4	DESCRIPTION	KIT NUMBER
1	605949	1	-	SHELL, radiator	
	061270	-	1	SHELL, radiator	
2	903632	6	6	CAPSCREW, 3/8"NC x 1-1/2"	
	911026	6	6	NUT, 3/8"NC	
	904206	6	6	LOCKWASHER, 3/8"	
2A	903633	-	2	CAPSCREW, 3/8"NC x 1-3/4"	
	911026	-	2	NUT, 3/8"NC	
	904206	-	2	LOCKWASHER, 3/8"	
	911115	-	2	WASHER, plain, SAE std., 3/8"	
3	605968	1	1	GRILLE, radiator protecting	
4	903626	6	6	CAPSCREW, 5/16"NC x 3/4"	
	910335	6	6	WASHER, plain, SAE std., 5/16"	
5	903626	10	10	CAPSCREW, 5/16"NC x 3/4"	
	910335	10	10	WASHER, plain, SAE std., 5/16"	
6	041639	1	1	MONOGRAM, "A-C", radiator shell	
7	912112	2	2	BOLT, machine, 1/2"NC x 1-1/2"	
8	911028	2	2	NUT, 1/2"NC	
9	904208	2	2	LOCKWASHER, 1/2"	
10	052351	1	-	SHIELD, radiator	
	061276	-	1	SHIELD, radiator	
11	903631	3	3	CAPSCREW, 3/8"NC x 1-1/4"	
12	911026	3	3	NUT, 3/8"NC	
13	904206	3	3	LOCKWASHER, 3/8"	
14	605963	1	-	HOOD, engine	
	058050	-	1	HOOD, engine (Not illustrated)	
15	605956	4	4	BOLT, hook	
16	911026	6	6	NUT, 3/8"NC	
17	605960	1	-	BAR, stiffening, engine hood	
	058048	-	1	BAR, stiffening, engine hood (Not illustrated)	
18	903627	3	3	CAPSCREW, 3/8"NC x 1/2"	
19	911115	3	3	WASHER, plain, SAE std., 3/8"	
20	053830	2	2	MARKER, ruby	
21	901171	4	4	SCREW, machine, #10-24NC x 3/8"	8 required on early machines
	904203	4	4	LOCKWASHER, #10	

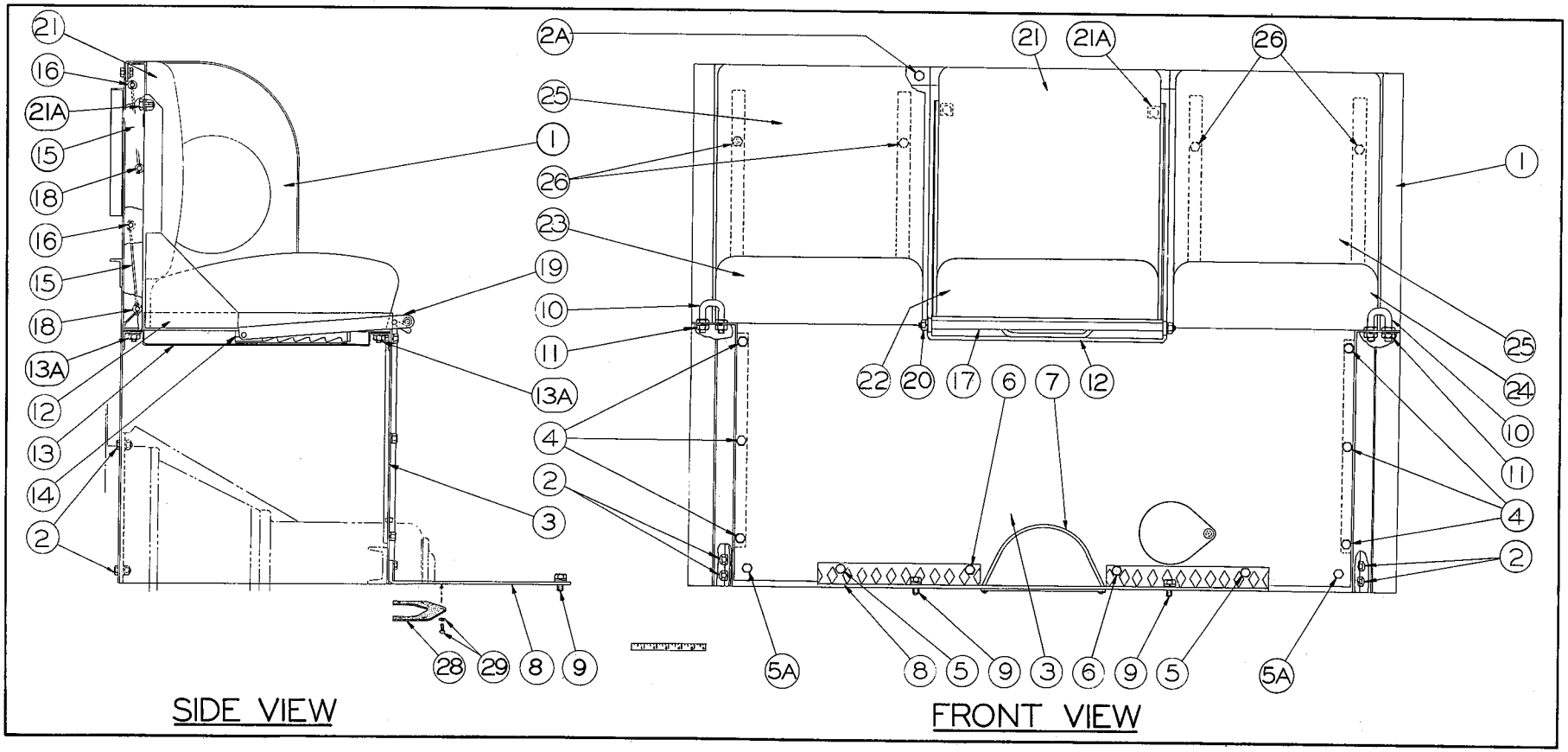

PLATE 1333A——SEAT AND FLOOR PLATE (EARLY AD 3 GRADERS)

SEAT AND FLOOR
(See Plate 1333A)

USAGE: Model AD3 Graders prior to serial No. 328

ITEM	PART NUMBER	QTY.	DESCRIPTION	KIT NUMBER
1	604652	1	BACK, seat	
2	035439	8	CAPSCREW, 3/8"NC x 1"	
	911026	8	NUT, 3/8"NC	
	904206	8	LOCKWASHER, 3/8"	
2A	045312	4	CAPSCREW, 5/16"NC x 3/4"	
	911025	4	NUT, 5/16"NC	
	904205	4	LOCKWASHER, 5/16"	
3	604670	1	FRONT, seat	
4	903628	6	CAPSCREW, 3/8"NC x 5/8"	
	904206	6	LOCKWASHER, 3/8"	
5	070960	2	CAPSCREW, 3/8"NC x 1-1/2"	
	904206	2	LOCKWASHER, 3/8"	
	911026	2	NUT, 3/8"NC	
	900817	2	WASHER, plain, U.S. std., 3/8"	
5A	013058	2	CAPSCREW, 3/8"NC x 1-1/4"	
	904206	2	LOCKWASHER, 3/8"	
	900817	2	WASHER, plain, U.S. std., 3/8"	
	911026	2	NUT, 3/8"NC	
6	035439	2	CAPSCREW, 3/8"NC x 1"	
	904206	2	LOCKWASHER, 3/8"	
7	604674	1	SEAL, seat front (rubber, 1/2" x 1/2" x 15")	
8	604676	1	PLATE, floor	
9	035221	2	CAPSCREW, 1/2"NC x 1"	
	904208	2	LOCKWASHER, 1/2"	
	900818	2	WASHER, plain, U.S. std., 1/2"	
10	604677	2	HANDLE, grab	
11	911035	8	NUT, jam, 1/2"NC	
	904208	4	LOCKWASHER, 1/2"	
12	604678	1	SEAT, center	
13	604687	1	PAN, center seat	
13A	914814	4	SCREW, machine, flat head, 3/8"NC x 1"	
	911026	4	NUT, 3/8"NC	
	904206	4	LOCKWASHER, 3/8"	
14	604688	1	SUPPORT, center seat - right	
	604689	1	SUPPORT, center seat - left	
15	604694	2	LINK, center seat suspension	
16	604696	2	SHAFT, center seat suspension (19-3/4" long)	
	900805	4	PIN, cotter, 1/8" x 3/4"	
17	604703	1	SPACER, center seat adjustment arms	
18	604697	2	SHAFT, center seat suspension (18" long)	
	900805	4	PIN, cotter, 1/8" x 3/4"	
19	604698	1	ARM, center seat adjustment - right	
	604699	1	ARM, center seat adjustment - left	
20	604702	1	ROD, tie, center seat adjustment arms (stud, 3/8"NC x 19-7/8")	
	911026	2	NUT, 3/8"NC	
	904206	2	LOCKWASHER, 3/8"	
21	604704	1	CUSHION, back - center	
21A	035439	2	CAPSCREW, 3/8"NC x 1"	
	904206	2	LOCKWASHER, 3/8"	
22	604705	1	CUSHION, seat - center	
23	604706	1	CUSHION, seat - right	
24	604707	1	CUSHION, seat - left	
25	604708	2	CUSHION, back - left and right	
26	903635	4	CAPSCREW, 3/8"NC x 2-1/2"	
	904206	4	LOCKWASHER, 3/8"	
28	605064	1	STRIP, floor plate sealing (rubber)	
29	914373	5	SCREW, drive, #14 x 1/2"	
	900816	5	WASHER, plain, U.S. std., 1/4"	

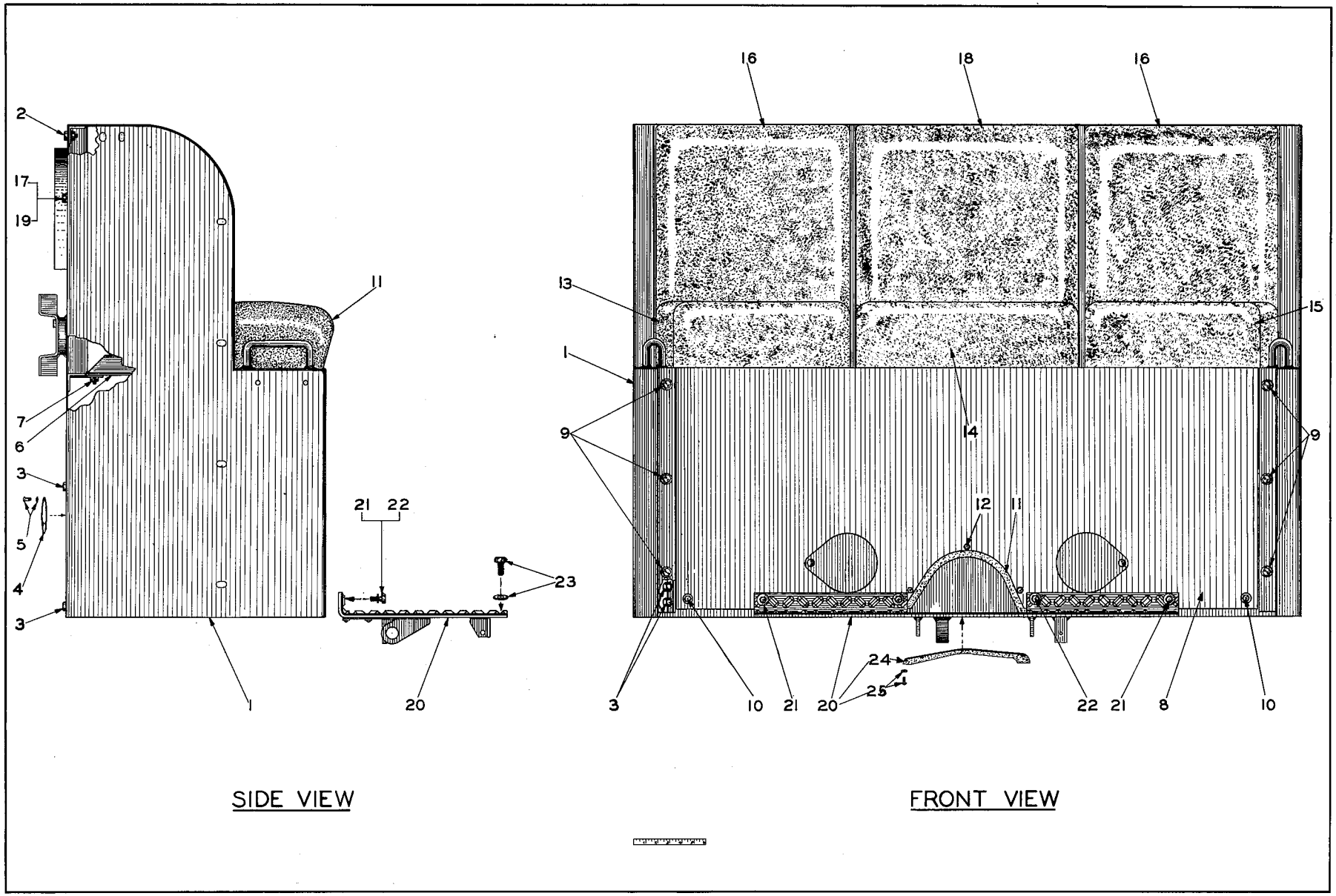

PLATE 1332B—SEAT AND FLOOR PLATE (AD3 AND AD4)

SEAT AND FLOOR
(See Plate 1332B)

USAGE: Model AD4 Graders and Model AD3 Graders serial No. 328 and up.

ITEM	PART NUMBER	QUANTITY AD3	QUANTITY AD4	DESCRIPTION	KIT NUMBER
1	050950	1	-	BACK, seat (Graders prior to #553, and graders #563 thru #588)	
	055544	1	-	BACK, seat (Graders #553 thru #562, and graders #589 thru #3313)	
	066200	1	-	BACK, seat (Graders #3314 and up)	
	061289	-	1	BACK, seat (Graders prior to #3314)	
	068675	-	1	BACK, seat (Graders #3314 and up)	
2	045312	5	-	CAPSCREW, 5/16"NC x 3/4"	Used with BACK 050950 only
	904205	5	-	LOCKWASHER, 5/16"	
	911025	5	-	NUT, 5/16"NC	
3	903630	8	8	CAPSCREW, 3/8"NC x 1"	4 less used on graders #3314 and up
	904206	8	8	LOCKWASHER, 3/8"	
	911026	8	8	NUT, 3/8"NC	
	903775	2	2	CAPSCREW, 3/8"NC x 7/8"	Used on graders #3314 and up
	904206	2	2	LOCKWASHER, 3/8"	
4	050751	1	1	COVER, hour meter mounting hole (Used on graders #440 thru #3313 only)	
5	040226	3	3	SCREW, thread-cutting, cross-recessed-hd., #6 x 1/2"	
	912729	3	3	LOCKWASHER, internal teeth, #6	
6	054858	2	-	ANGLE, supporting (Used on graders prior to #500)	
	050963	2	2	ANGLE, supporting (Used on graders #500 and up)	
7	910271	4	4	SCREW, machine, fl-hd., 1/4"NC x 5/8"	
	911114	4	4	WASHER, plain, SAE std., 1/4"	
	911024	4	4	NUT, 1/4"NC	
8	050961	1	1	PLATE, seat - front (Graders prior to #3314)	
	066201	1	1	PLATE, seat - front (Graders #3314 and up)	
9	903628	6	6	CAPSCREW, 3/8"NC x 5/8"	
	911115	6	6	WASHER, plain, SAE std., 3/8"	
10	903630	2	2	CAPSCREW, 3/8"NC x 1"	Used on graders prior to #3434
	900817	4	4	WASHER, plain, U.S. std., 3/8"	
	911026	2	2	NUT, 3/8"NC	
	903628	2	2	CAPSCREW, 3/8"NC x 5/8"	Used on graders #3434 and up
	911115	2	2	WASHER, plain, SAE std., 3/8"	
				NOTE: Also see page 211 for special front plate used with adjustable type seat.	
11	053094	1	1	STRIP, sealing, seat front (rubber)	
12	034964	3	3	CAPSCREW, 1/4"NC x 3/4"	
	900816	3	3	WASHER, plain, U.S. std., 1/4"	
	911024	3	3	NUT, 1/4"NC	
13	604706	1	1	CUSHION, seat - right	
14	050965	1	1	CUSHION, seat - center	
15	604707	1	1	CUSHION, seat - left	
16	604708	2	2	CUSHION, back - left and right	
17	903632	4	4	CAPSCREW, 3/8"NC x 1-1/2"	
	904206	4	4	LOCKWASHER, 3/8"	
18	050967	1	1	CUSHION, back - center	
19	903632	2	2	CAPSCREW, 3/8"NC x 1-1/2"	
	904206	2	2	LOCKWASHER, 3/8"	

(Continued)

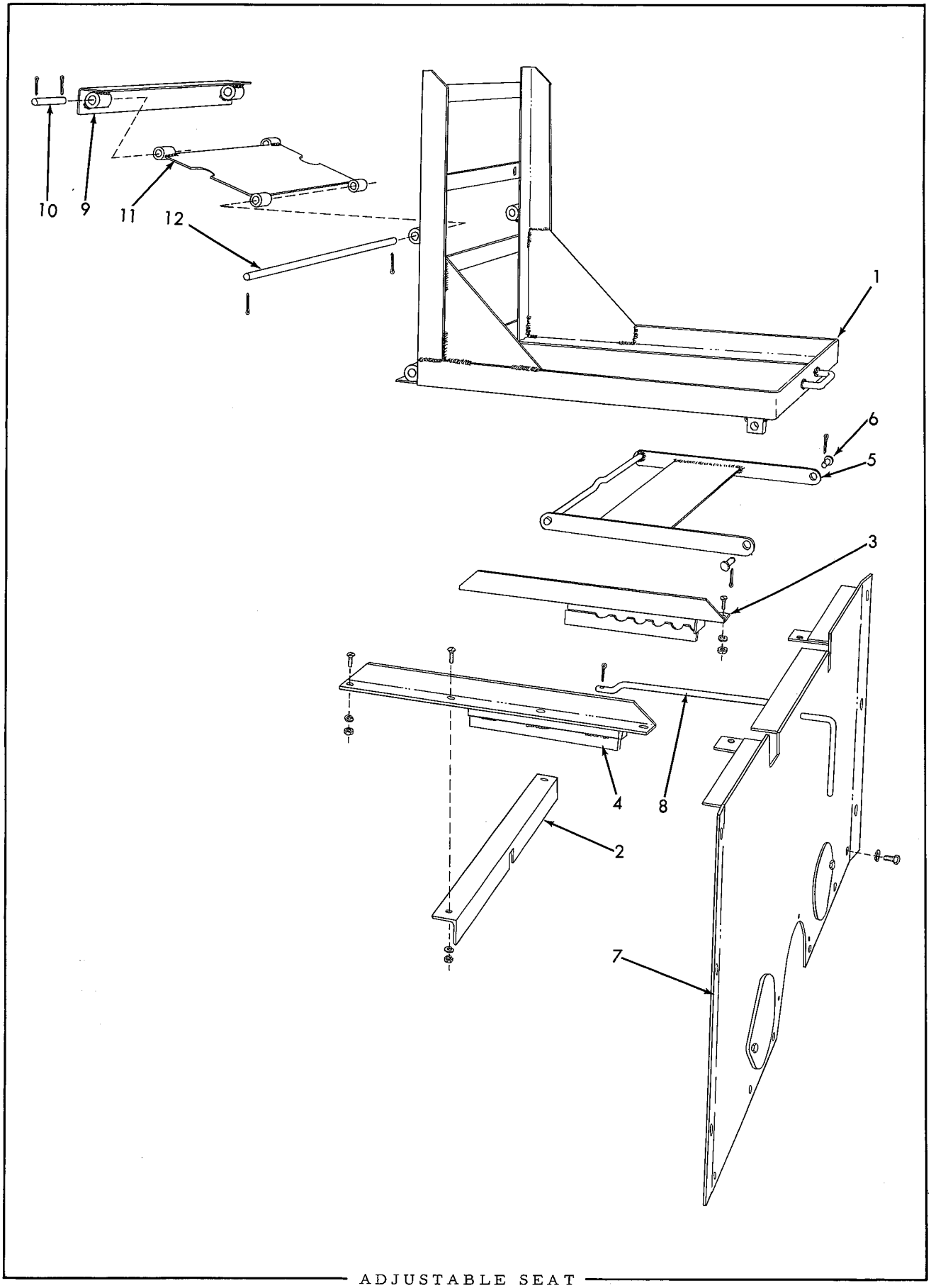

ADJUSTABLE SEAT

SEAT AND FLOOR (Cont'd)

ITEM	PART NUMBER	QUANTITY AD3	QUANTITY AD4	DESCRIPTION	KIT NUMBER
20	051092	1	1	PLATE ASSEMBLY, floor (Includes items 24 and 25)	
21	910245	2	2	CAPSCREW, 3/8"NC x 1-3/8"	Used on graders prior to #3434
	900817	4	4	WASHER, plain, U.S. std., 3/8"	
	911026	2	2	NUT, 3/8"NC	
	903630	2	2	CAPSCREW, 3/8"NC x 1"	Used on graders #3434 and up
	911115	2	2	WASHER, plain, SAE std., 3/8"	
22	903630	2	2	CAPSCREW, 3/8"NC x 1"	
	911026	2	2	NUT, 3/8"NC	
	900817	4	4	WASHER, plain, U.S. std., 3/8"	
23	903630	2	2	CAPSCREW, 3/8"NC x 1"	
	911115	2	2	WASHER, plain, SAE std., 3/8"	
24	605064	2	-	STRIP, sealing, floor plate (rubber)(Used on graders prior to #588)	
	053525	1	1	STRIP, sealing, floor plate (rubber)(Used on graders #588 and up)	
25	914373	5	5	SCREW, drive, #14 x 1/2"	
	900816	5	5	WASHER, plain, U.S. std., 1/4"	

ADJUSTABLE SEAT

USAGE: Special Equipment. Applicable to graders serial No. 328 and up.

ITEM	PART NUMBER	QTY.	DESCRIPTION	KIT NUMBER
1	068755	1	FRAME, adjustable seat	
2	068742	1	ANGLE, seat frame	
	910271	2	SCREW, machine, flat-hd., 1/4"NC x 5/8"	
	911024	2	NUT, 1/4"NC	
	904204	2	LOCKWASHER, 1/4"	
3	068731	1	ANGLE, seat ratchet - left	
	910271	2	SCREW, machine, flat-hd., 1/4"NC x 5/8"	
	911024	2	NUT, 1/4"NC	
	904204	2	LOCKWASHER, 1/4"	
4	068732	1	ANGLE, seat ratchet - right	
	910271	2	SCREW, machine, flat-hd., 1/4"NC x 5/8"	
	911024	2	NUT, 1/4"NC	
	904204	2	LOCKWASHER, 1/4"	
5	068741	1	BAR, seat ratchet	
6	604899	2	PIN, seat ratchet bar	
	900942	2	PIN, cotter, 3/32" x 5/8"	
7	068760	1	PLATE, seat front (Used in place of standard PLATE 066201)	
	903628	6	CAPSCREW, 3/8"NC x 5/8"	
	911115	6	WASHER, plain, SAE std., 3/8"	
8	068761	1	CRANK, seat adjusting	
	900942	1	PIN, cotter, 3/32" x 5/8"	
9	------	2	ANGLE, seat pivot (Welded to seat BACK)	
10	068743	4	ROD, seat pivot angle	
	900942	8	PIN, cotter, 3/32" x 5/8"	
11	068746	2	PLATE, seat pivot	
12	068744	2	ROD, seat pivot plate	
	900942	4	PIN, cotter, 3/32" x 5/8"	

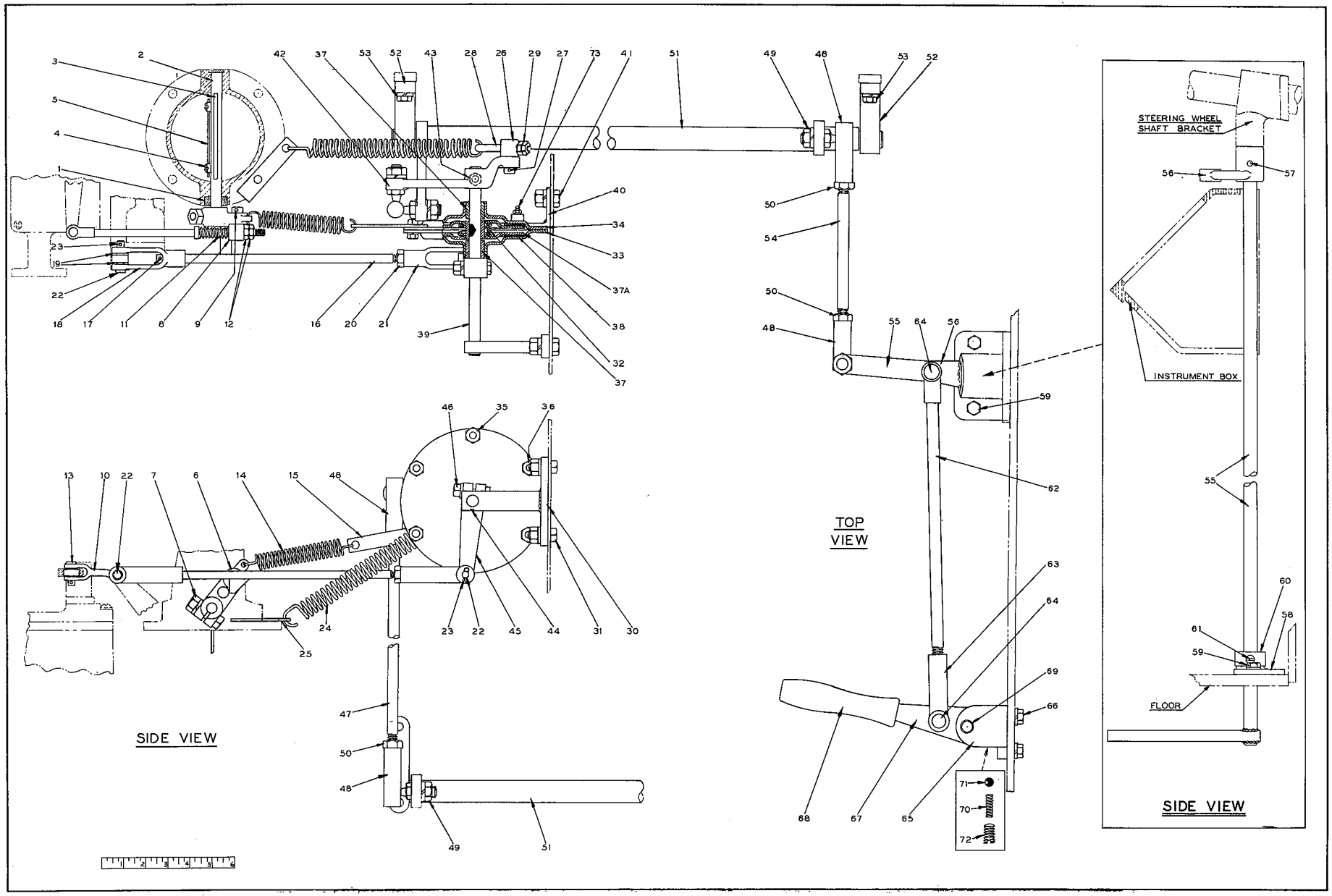

PLATE 1312B——ENGINE CONTROLS (EARLY AD3 GRADERS)

ENGINE CONTROLS
(See Plate 1312B)

USAGE: Model AD3 Graders prior to serial No. 328.

ITEM	PART NUMBER	QTY.	DESCRIPTION	KIT NUMBER
1	040302	1	SEAL, engine air shut-off valve shaft	
2	040161	1	SHAFT, engine air shut-off valve	
3	040164	1	VALVE, engine air shut-off	
4	040162	3	CAPSCREW (filister head, #10-24NC x 1/2")	
5	040163	1	WIRE, locking (1/32" x 7")	
6	604243	1	LEVER, engine air shut-off valve	
7	070960	1	CAPSCREW, 3/8"NC x 1-1/2"	
	911026	1	NUT, 3/8"NC	
	904206	1	LOCKWASHER, 3/8"	
8	604709	1	SWIVEL, engine shut-off control rod	
9	900805	1	PIN, cotter, 1/8" x 3/4"	
10	604710	1	ROD, engine shut-off control	
11	070385	1	SPRING, engine shut-off control rod	
12	913636	2	NUT, hex, 5/16"NF	
13	033067	1	PIN, engine shut-off control rod	
	904001	1	PIN, cotter, 3/32" x 1/2"	
14	605469	1	SPRING, retracting, engine air shut-off valve lever	
15	------	1	CLIP, shut-off lever retracting spring (Not available)	
16	604714	1	ROD, throttle control	
17	900805	1	PIN, cotter, 1/8" x 3/4"	
18	604717	1	YOKE, sliding, throttle control rod	
19	910335	2	WASHER, plain, SAE std., 5/16"	
20	911041	1	NUT, 3/8"NF	
21	604718	1	YOKE, adjusting, throttle control rod	
22	604719	2	PIN, throttle control rod yoke	
23	900801	2	PIN, cotter, 3/32" x 3/4"	
24	604720	1	SPRING, retracting, throttle control lever	
25	604721	1	CLIP, control rod retracting spring	
26	604709	1	SWIVEL, retracting spring adjusting screw	
27	900805	1	PIN, cotter, 1/8" x 3/4"	
28	605043	1	SCREW, adjusting, lever retracting spring	
29	906652	2	NUT, jam, 5/16"NC	
30	------	1	BRACKET, supporting, throttle control - right (Not available)	
31	035439	2	CAPSCREW, 3/8"NC x 1"	
	911026	2	NUT, 3/8"NC	
	904206	2	LOCKWASHER, 3/8"	
32	071810	1	SPRING, throttle control pressure plate	
33	071799	1	COVER ASSEMBLY, throttle control - right (Includes 1 BUSHING 071800)	
34	072369	1	COVER ASSEMBLY, throttle control - left (Includes 1 BUSHING 071800)	
35	035244	4	CAPSCREW, 3/8"NC x 3/4"	
	911026	4	NUT, 3/8"NC	
	904206	4	LOCKWASHER, 3/8"	
36	035439	2	CAPSCREW, 3/8"NC x 1"	
	911026	2	NUT, 3/8"NC	
	904206	2	LOCKWASHER, 3/8"	

(Continued)

ENGINE CONTROLS (Cont'd)
(See Plate 1312B)

ITEM	PART NUMBER	QTY.	DESCRIPTION	KIT NUMBER
37	071800	2	BUSHING, throttle control cover	
37A	071798	2	PLATE, pressure, throttle control	
38	071808	2	DISC, friction, throttle control (fibre)	
39	604726	1	SHAFT, throttle control	
40	071995	1	BRACKET, supporting, throttle control- left	
41	035244	2	CAPSCREW, 3/8"NC x 3/4"	
	911026	2	NUT, 3/8"NC	
	904206	2	LOCKWASHER, 3/8"	
42	604235	1	BELLCRANK, throttle control	
43	045295	1	CAPSCREW, 5/16"NC x 1"	
	904205	1	LOCKWASHER, 5/16"	
44	905121	2	KEY, #5 woodruff, 1/8" x 5/8"	
45	604238	1	LEVER, throttle control	
46	046321	1	CAPSCREW, 5/16"NC x 1-1/2"	
	911025	1	NUT, 5/16"NC	
	904205	1	LOCKWASHER, 5/16"	
47	604728	1	ROD, throttle control	
48	910939	4	JOINT ASSEMBLY, ball and socket (1/2"NF)(Serviced only as a unit)	
49	913830	4	NUT, jam, 1/2"NF	
	904208	4	LOCKWASHER, 1/2"	
50	913830	4	NUT, jam, 1/2"NF	
51	604730	1	SHAFT, throttle control	
52	604229	2	BRACKET, throttle control shaft	
53	035439	4	CAPSCREW, 3/8"NC x 1"	
	904206	4	LOCKWASHER, 3/8"	
54	604734	1	ROD, throttle control	
55	604735	1	ROD, throttle control (vertical)	
56	604230	1	LEVER, throttle control	
57	604738	1	PIN, straight (1/4" x 1-3/8")	
58	604739	1	COVER, throttle control rod opening	
59	045295	2	CAPSCREW, 5/16"NC x 1"	
	904205	2	LOCKWASHER, 5/16"	
60	604745	1	COLLAR, throttle control vertical rod	
61	902870	1	SETSCREW, hex socket, 3/8"NC x 3/8"	
62	604740	1	ROD, throttle control	
63	068389	1	YOKE, adjusting, throttle control rod	
64	033072	2	PIN, control rod yoke	
	910967	2	PIN, cotter, 1/8" x 7/8"	
65	604232	1	BRACKET, throttle hand lever	
66	035439	2	CAPSCREW, 3/8"NC x 1"	
	904206	2	LOCKWASHER, 3/8"	
67	604233	1	LEVER, throttle operating	
68	600940	1	GRIP, throttle operating lever	
69	604746	1	PIN, throttle operating lever	
	900806	1	PIN, cotter, 1/8" x 1"	
70	064468	1	SPRING, throttle operating lever ball	

(Continued)

ENGINE CONTROL (Cont'd)
(See Plate 1312B)

ITEM	PART NUMBER	QTY.	DESCRIPTION	KIT NUMBER
71	905360	1	BALL, steel, 3/8" diam. (throttle lever locking)	
72	901029	1	SETSCREW, headless, oval point, 1/2"NC x 3/4"	
73	914465	1	FITTING, lubricating, straight, 1/8"NPT	

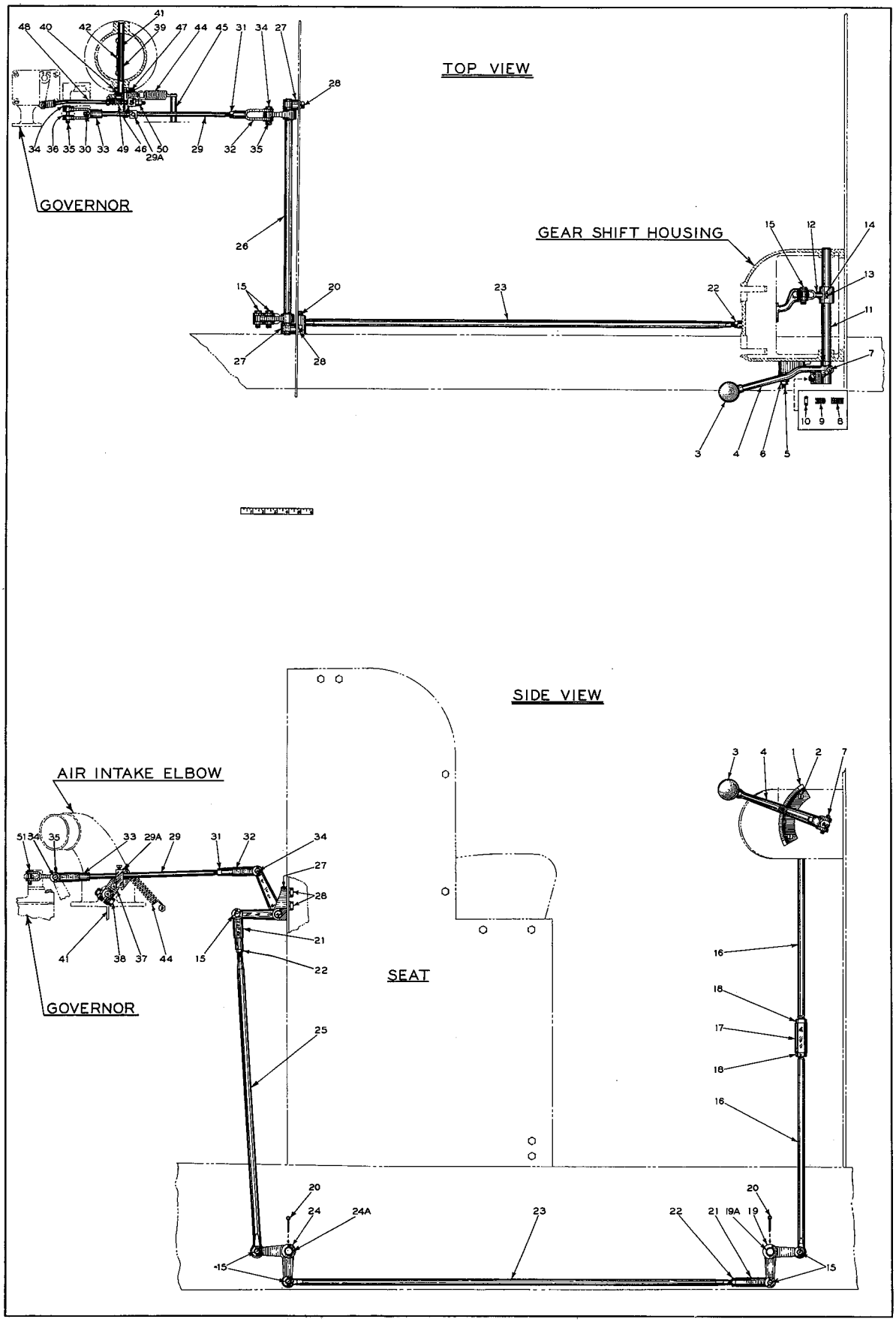

PLATE 1318B —— ENGINE CONTROLS (AD3 AND AD4 GRADERS)

ENGINE CONTROLS
(See Plate 1318B)

USAGE: Model AD4 Grader and Model AD3 Grader serial No. 328 and up.

ITEM	PART NUMBER	QUANTITY AD3	QUANTITY AD4	DESCRIPTION	KIT NUMBER
1	605986	1	1	QUADRANT, throttle control	
2	900574	2	2	SCREW, machine, 1/4"NC x 1/2"	
	904204	2	2	LOCKWASHER, 1/4"	
3	U-171	1	1	KNOB, throttle control lever	
4	605988	1	1	LEVER, throttle control	
5	605984	1	1	SETSCREW, throttle control lever (5/16"NC x 1-1/2")	
6	906652	1	1	NUT, jam, 5/16"NC	
7	605983	1	1	PIN, throttle control lever (5/16" x 1-5/8")	
	900801	2	2	PIN, cotter, 3/32" x 3/4"	
8	051986	1	1	SPRING, throttle control lever	
9	914480	1	1	SETSCREW, headless, rd-point, 7/16"NF x 3/4"	
10	910876	1	1	NUT, jam, 7/16"NF	
11	606015	1	1	SHAFT, throttle control lever	
12	605762	1	1	LEVER, throttle control	
13	606002	1	1	PIN, straight (1/4" x 1-11/16")	
14	904001	2	2	PIN, cotter, 3/32" x 1/2"	
15	051049	6	6	PIN, throttle control linkage (7/16" x 1-1/4")	
	900801	6	6	PIN, cotter, 3/32" x 3/4"	
16	605975	2	2	ROD, throttle control (vertical)	
17	605976	1	1	TURNBUCKLE, throttle control rods	
18	911331	2	2	NUT, 9/16"NF	
19	065167	1	1	BELLCRANK ASSEMBLY, throttle control - front (Includes item 19A)	
19A	065169	1	1	BUSHING, throttle control front bellcrank (Graders #3190 and up)	
20	900806	2	2	PIN, cotter, 1/8" x 1" (Retains bellcrank)	
21	605973	2	2	YOKE, throttle control rods	
22	911042	2	2	NUT, 7/16"NF	
23	605982	1	1	ROD, throttle control (horizontal)	
24	605746	1	1	BELLCRANK, throttle control - rear (Graders prior to #3190)	
	065170	1	1	BELLCRANK ASSEMBLY, throttle control - rear (Includes item 24A)(Used on graders #3190 and up)	
24A	065172	1	1	BUSHING, throttle control rear bellcrank (Graders #3190 and up)	
25	605981	1	1	ROD, throttle control (vertical)	
26	605989	1	1	SHAFT AND LEVERS, throttle control (Graders prior to #2795)	
	065173	1	1	SHAFT AND LEVERS, throttle control (Graders #2795 and up)	
27	605745	2	2	BEARING, throttle control shaft	
28	903629	4	4	CAPSCREW, 3/8"NC x 3/4"	
	904206	4	4	LOCKWASHER, 3/8"	
29	605979	1	-	ROD, governor control (13-1/4" long)	When for graders prior to #2239 also order item 29A
	061205	-	1	ROD, governor control (19-1/2" long)	

(Continued)

ENGINE CONTROLS (Cont'd)

ITEM	PART NUMBER	QUANTITY AD3	QUANTITY AD4	DESCRIPTION	KIT NUMBER
29A	065175	1	1	BAR, adjustable, governor control rod (Used on graders #2239 and up)	
	900685	1	1	SETSCREW, sq-hd., cup point, 1/4"NC x 1/2"	
30	900805	1	1	PIN, cotter, 1/8" x 3/4"	
31	911041	1	1	NUT, hex, 3/8"NF	
32	604718	1	1	YOKE, adjustable, governor control rod	
33	604717	1	1	YOKE, sliding, governor control rod	
34	604719	2	2	PIN, governor control rod yokes	
35	900801	2	2	PIN, cotter, 3/32" x 3/4"	
36	910335	2	2	WASHER, plain, SAE std., 5/16"	
37	604243	1	1	LEVER, engine air shut-off	
38	903632	1	1	CAPSCREW, 3/8"NC x 1-1/2"	
	911026	1	1	NUT, 3/8"NC	
	904206	1	1	LOCKWASHER, 3/8"	
39	040161	1	1	SHAFT, air shut-off valve	
40	040302	1	1	SEAL, air shut-off valve shaft	
41	040164	1	1	VALVE, air shut-off	
42	040162	3	3	SCREW, machine (#10-24NC x 1/2", drilled head)	
	040163	1	1	WIRE, locking (1/32" x 7")	
44	049108	1	-	SPRING, retracting, air shut-off valve lever (3-7/8" long)	
	061099	-	1	SPRING, retracting, air shut-off valve lever (6-5/8" long)	
45	605977	1	1	ANCHOR, lever retracting spring	
46	604709	1	1	SWIVEL, fuel shut-off control rod	
47	900806	1	1	PIN, cotter, 1/8" x 1"	
48	604710	1	-	ROD, fuel shut-off control (8-1/2" long)	
	061207	-	1	ROD, fuel shut-off control (11-3/8" long)	
49	070385	1	1	SPRING, fuel shut-off control rod	
50	913636	2	2	NUT, 5/16"NF	
51	033067	1	1	PIN, fuel shut-off control rod	
	904001	1	1	PIN, cotter, 3/32" x 1/2"	

INSTRUMENTS AND ELECTRIC STARTING AND LIGHTING

	PAGE NUMBER
Air Heater	87, 89
Air Heater Switch	221, 223
Ammeter	221, 223
Battery and Cables	231
Fuel Pressure Gauge	221, 223
Gauge-Units (Electric)	225
Generator	230
Generator Belt	230
Head Light and Parts	225, 229
Horn	225
Horn Switch	221, 223
Hour Meter	236
Instruments	221, 223
Lights	225, 229, 235
Light Switch	221, 223
Oil Pressure Gauge	221, 223
Rear Flood Light	235
Starters	232, 233
Tail Light and Parts	225, 229
Wiring	225, 229, 231, 232, 233, 235

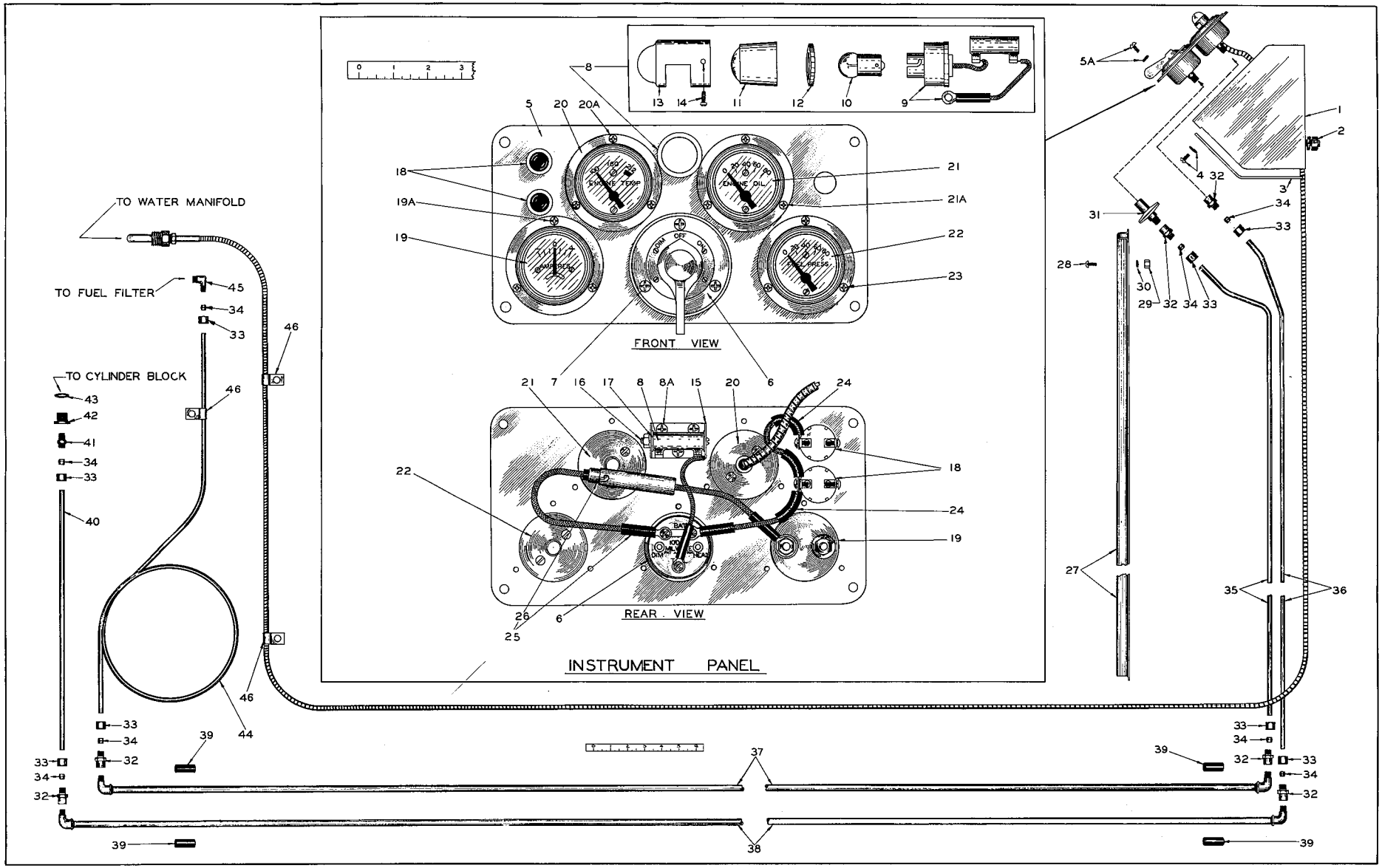

PLATE 1376A — INSTRUMENTS (EARLY AD GRADERS)

INSTRUMENTS
(See Plate 1376A)

USAGE: Model AD3 Graders prior to serial No. 328

ITEM	PART NUMBER	QTY.	DESCRIPTION	KIT NUMBER
1	604360	1	BOX, instrument	
2	013058	2	CAPSCREW, 3/8"NC x 1-1/4"	
	911026	2	NUT, 3/8"NC	
	904206	2	LOCKWASHER, 3/8"	
3	604840	1	COVER, instrument box	
4	900574	4	SCREW, machine, 1/4"NC x 1/2"	
	904204	4	LOCKWASHER, 1/4"	
5	604841	1	PANEL, instrument	
5A	900574	4	SCREW, machine, 1/4"NC x 1/2"	
	904204	4	LOCKWASHER, 1/4"	
6	605051	1	SWITCH, lights	
7	034076	3	SCREW, thread-cutting, cross-recess head, #8 x 1/2"	
	906964	3	LOCKWASHER, #8	
8	040936	1	LIGHT ASSEMBLY, instrument panel (Consists of items 9 thru 14)	
8A	034076	3	SCREW, thread-cutting, cross-recess head, #8 x 1/2"	
	906964	3	LOCKWASHER, #8	
9	------	1	BASE ASSEMBLY (Not serviced. Order item 8)	
10	031805	1	BULB, panel light (single contact, 3C. P., 6 volt)	
11	040974	1	GLASS, panel light	
12	040969	1	GASKET, panel light glass	
13	040973	1	COVER, panel light	
14	044211	2	SCREW	
15	040963	1	BRACKET, panel light resistor	
16	913162	1	SCREW, machine, #8-32NC x 1-3/4"	
	907154	1	NUT, #8-32NC	
	906964	1	LOCKWASHER, #8	
17	040968	2	WASHER, centering, panel light resistor	
18	031337	2	SWITCH, push-button, horn and engine air heater	
19	034911	1	AMMETER	
19A	040226	3	SCREW, thread-cutting, cross-recess head, #6 x 1/2"	
	912729	3	LOCKWASHER, internal teeth, #6	
20	604851	1	GAUGE, engine temperature	
20A	040226	3	SCREW, thread-cutting, cross-recess head, #6 x 1/2"	
	912729	3	LOCKWASHER, internal teeth, #6	
21	034910	1	GAUGE, engine oil pressure	
21A	040226	3	SCREW, thread-cutting, cross-recess head, #6 x 1/2"	
	912729	3	LOCKWASHER, internal teeth, #6	
22	040152	1	GAUGE, fuel pressure	
23	040226	3	SCREW, thread-cutting, cross-recess head, #6 x 1/2"	
	912729	3	LOCKWASHER, internal teeth, #6	
24	605154	2	CABLE, switch connecting (4-3/4" long)	
25	605150	1	CABLE ASSEMBLY, ammeter to light switch (13" long. Includes item 26)	
26	041318	1	FUSE, 20 ampere (1/4" x 1-1/4")	
27	604853	1	SHIELD, pressure and temperature gauge tubes	
28	900561	8	SCREW, machine, 5/16"NC x 3/4"	
29	911025	8	NUT, 5/16"NC	
30	904205	8	LOCKWASHER, 5/16"	
31	------	1	RESTRICTOR, fuel pressure gauge (No longer available)	

(Continued)

INSTRUMENTS (Contd')

ITEM	PART NUMBER	QTY.	DESCRIPTION	KIT NUMBER
32	910213	6	CONNECTOR, female, compression, 1/4" tube, 1/8"NPT (Includes NUT and SLEEVE)	
33	911437	8	NUT, compression fitting, 1/4" tube	
34	911435	8	SLEEVE, compression fitting, 1/4" tube	
35	604847	1	TUBE, fuel pressure gauge to fuel pipe (1/4"O. D. x 48-1/2" long)	
36	604842	1	TUBE, oil pressure gauge to oil pipe (1/4"O. D. x 48" long)	
37	604848	1	PIPE, fuel pressure gauge (51-1/4" long)	
38	604843	1	PIPE, oil pressure gauge (52-1/4" long)	
39	600182	4	SLEEVE, fuel and oil pipes (rubber)	
40	604845	1	TUBE, fuel pipe to cylinder block (1/4"O. D. x 15" long)	
41	910197	1	CONNECTOR, male, compression, 1/4" tube, 1/8"NPT (Includes NUT and SLEEVE)	
42	604846	1	BUSHING, reducing, fuel tube connector (3/8"NPT to 1/8"NPT)	
43	604876	1	WASHER, reducing bushing (copper)	
44	604850	1	TUBE, oil pipe to fuel filter (1/4"O. D. x 45-1/2" long)	
45	911018	1	ELBOW, male, compression, 1/4" tube, 1/8"NPT (Includes NUT and SLEEVE)	
46	AM-8691	3	CLIP, gauge tubes (single, closed type, 1/4" diam., 13/32" bolt-hole)	

INSTRUMENTS
(See Plate 1365B)

USAGE: Model AD4 Graders and Model AD3 Graders serial No. 328 and up.

ITEM	PART NUMBER	QUANTITY AD3	QUANTITY AD4	DESCRIPTION	KIT NUMBER
1	050969	1	1	BOX, instrument	
2	903630	2	2	CAPSCREW, 3/8"NC x 1"	
3	904206	2	2	LOCKWASHER, 3/8"	
4	051007	1	1	PANEL, instrument	
5	900574	4	4	SCREW, machine, 1/4"NC x 1/2"	
6	904204	4	4	LOCKWASHER, 1/4"	
7	065839	1	1	GAUGE, engine temperature (Includes mounting CLAMP) (When replacing original gauge on graders prior to #2914 also order GAUGE-UNIT 065838)	
8	051220	1	1	GAUGE, engine oil pressure (Includes mounting CLAMP)	
9	057218	1	1	GAUGE, fuel pressure (80 lb. capacity. Includes mounting CLAMP)(When replacing 30lb. gauge on graders prior to #441 also order GAUGE-UNIT 057172)	
10	051218	1	1	AMMETER (Includes mounting CLAMP)	
11	031337	1	1	SWITCH, push button, horn	
12	051195	1	1	SWITCH, lights (Includes operating KNOB)	
13	040936	1	1	LIGHT ASSEMBLY, instrument panel (Consists of items 15 thru 20)	
14	034076	3	3	SCREW, thread-cutting, cross-recessed head, #8 x 1/2"	
	906964	3	3	LOCKWASHER, #8	

(Continued)

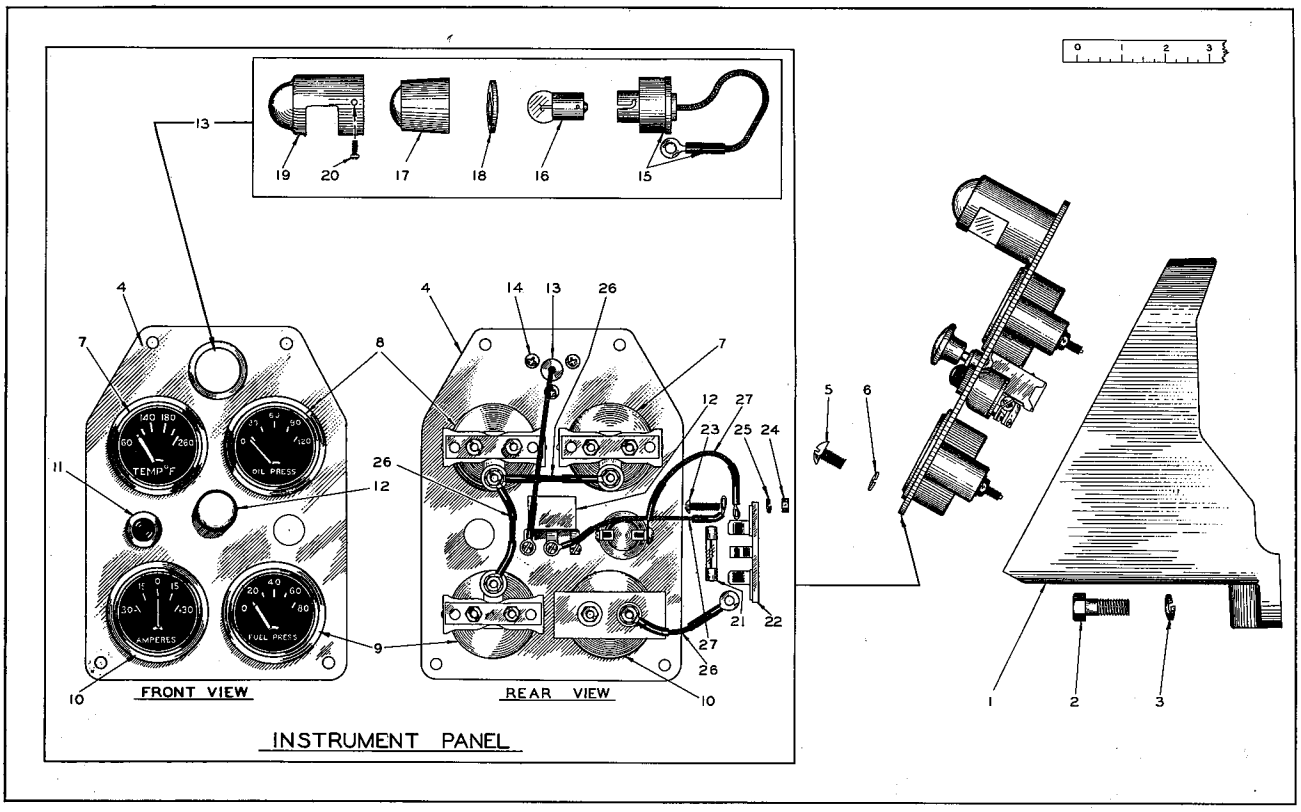

PLATE 1365B—INSTRUMENTS

INSTRUMENTS (Cont'd)
(See Plate 1365B)

ITEM	PART NUMBER	QUANTITY AD3	QUANTITY AD4	DESCRIPTION	KIT NUMBER
15	------	1	1	BASE ASSEMBLY (Not serviced. Order item 13)	
16	048799	1	1	BULB, panel light (single contact, 3 c.p., 12 volt)	
17	040974	1	1	GLASS, panel light	
18	040969	1	1	GASKET, panel light glass	
19	040973	1	1	COVER, panel light	
20	044211	2	2	SCREW, panel light cover	
21	041318	1	1	FUSE, 20 ampere (1/4" x 1-1/4")	
22	605842	1	1	BLOCK, fuse mounting	
23	900555	2	2	SCREW, machine, #8NC x 3/4"	
24	907154	2	2	NUT, #8NC	
25	906964	2	2	LOCKWASHER, #8	
26	051005	3	3	CABLE, instrument connecting (3" long)	
27	051006	2	2	CABLE, panel switches (4-1/2" long)	

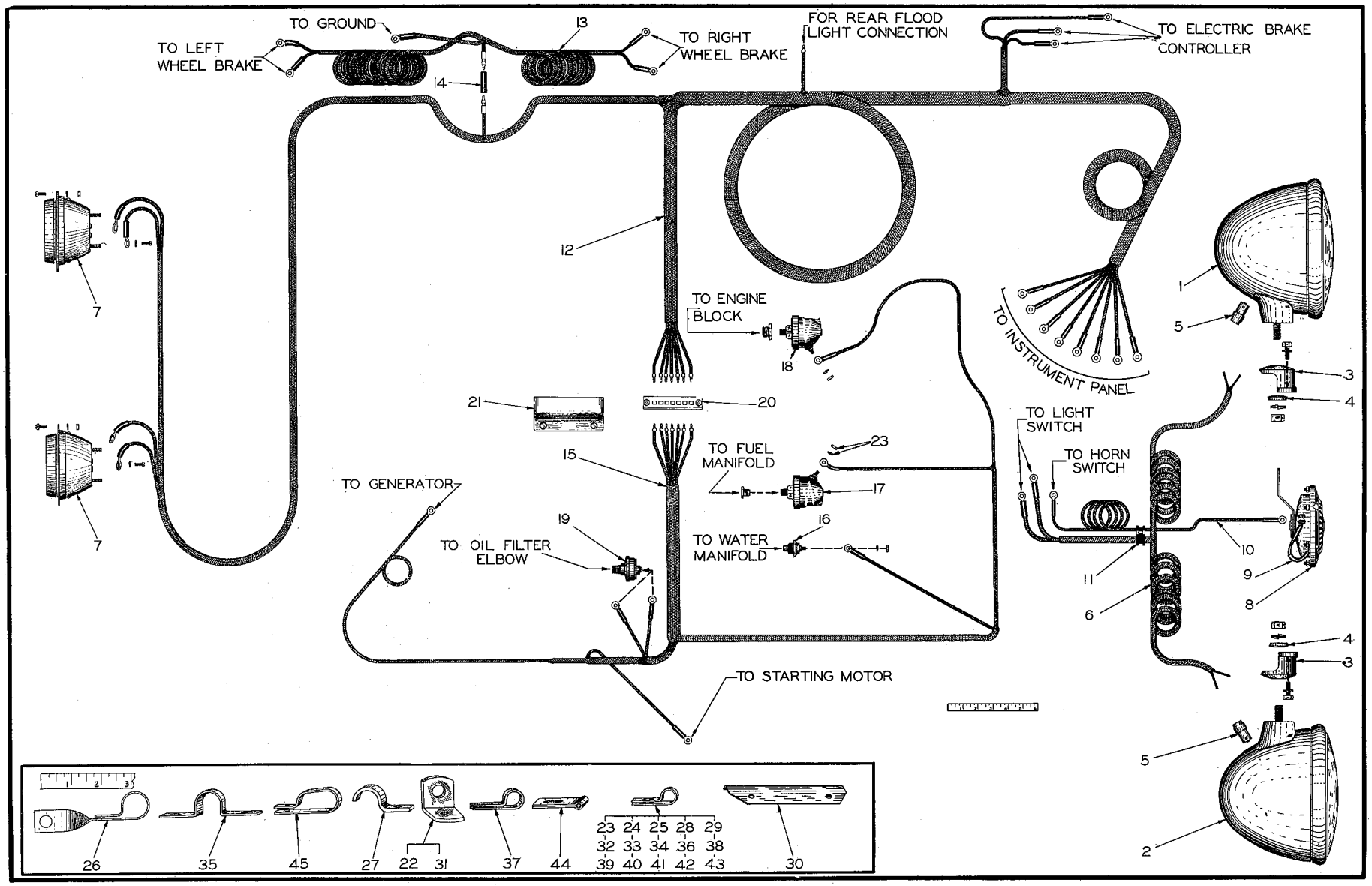

PLATE 1746A — LIGHTS, HORN AND WIRING

LIGHTS, HORN, AND WIRING
(See Plate 1746A)

ITEM	PART NUMBER	QUANTITY AD3	QUANTITY AD4	DESCRIPTION	KIT NUMBER
1	603774	1	1	LIGHT ASSEMBLY, head - left (See page 229 for repair parts)	
	911043	1	1	NUT, 1/2"NF	
	904208	1	1	LOCKWASHER, 1/2"	
2	603775	1	1	LIGHT ASSEMBLY, head - right (See page 229 for repair parts)	
	911043	1	1	NUT, 1/2"NF	
	904208	1	1	LOCKWASHER, 1/2"	
3	601376	2	2	BRACKET, head light mounting	
	903775	4	4	CAPSCREW, 3/8"NC x 7/8"	
	904206	4	4	LOCKWASHER, 3/8"	
4	053635	2	2	WASHER, ball, head light mounting	
5	603684	2	2	PLUG ASSEMBLY, head light (Serviced only as a unit)	
6	605050	1	1	HARNESS, head light wiring	
7	604874	2	2	LIGHT ASSEMBLY, combination tail and stop (See page 229 for repair parts)	
	901172	6	6	SCREW, machine, rd-hd., #10NC x 1/2"	
	901310	6	6	NUT, #10-24NC	
	904203	6	6	LOCKWASHER, #10	
	900553	4	4	SCREW, machine, #8-32NC x 1/2" } For cable terminals	
	906964	4	4	LOCKWASHER, #8 } For cable terminals	
8	604873	1	1	HORN ASSEMBLY, warning (Serviced only as a unit)	
9	051005	1	1	CABLE, horn ground	
10	605165	1	-	CABLE, horn to switch (31" long)(Used on graders prior to #328)	
	605885	1	1	CABLE, horn to switch (39-1/2" long)(Used on graders #328 and up)	
11	605164	1	1	GROMMET, horn cable and head light wiring harness (rubber)	
12	605049	1	-	HARNESS, main wiring (Graders prior to #328)	
	065963	1	1	HARNESS, main wiring (Graders #328 and up. When required for graders prior to #2468 also furnish items 13 and 14)	
				NOTE: Items 13 and 14 were used only on graders #2468 and up.	
13	064915	1	1	HARNESS, brake wiring	
14	048142	1	1	CONNECTOR, brake wiring harness to main wiring harness	
				NOTE: Items 15 thru 21 were used only on graders #328 and up.	
15	065964	1	1	HARNESS, engine wiring	
16	065838	1	1	GAUGE-UNIT, sending, engine temperature (When replacing original unit on graders prior to #2914 also furnish new GAUGE 065839)	
	910251	1	1	NUT, #10-32NF	
	904203	1	1	LOCKWASHER, #10	
17	057182	1	1	GAUGE-UNIT, sending, fuel pressure (When replacing original unit on graders prior to #440, also order new GAUGE 057218)	
	910251	1	1	NUT, #10-32NF	
	904203	1	1	LOCKWASHER, #10	
	901825	1	1	BUSHING, pipe reducing, 1/4"NPT to 1/8"NPT	
18	051262	1	1	GAUGE-UNIT, sending, engine oil pressure	
	910251	1	1	NUT, #10-32NF	
	904203	1	1	LOCKWASHER, #10	
	904269	1	1	BUSHING, pipe reducing, 1/2"NPT to 1/8"NPT	
19	050288	1	1	SWITCH, pressure, sending gauge-units	

(Continued)

ITEM	PART NUMBER	QUANTITY AD3	QUANTITY AD4	DESCRIPTION	KIT NUMBER
20	064978	1	1	BLOCK, junction, electric wiring (When replacing original BLOCK on graders prior to #2830, also order new COVER 064977)	
	913593	2	2	SCREW, thread-cutting, hex-hd., 1/4"NC x 5/8"	
	904204	2	2	LOCKWASHER, 1/4"	
21	064977	1	1	COVER, wiring junction box	
	913593	2	2	SCREW, thread-cutting, hex-hd., 1/4"NC x 5/8"	
	904204	2	2	LOCKWASHER, 1/4"	
				NOTE: Items 22 thru 27 were used only on graders prior to serial No. 328	
22	602230	1	-	CLIP, angle, battery cable and main wiring harness)	
	903632	1	-	CAPSCREW, 3/8"NC x 1-1/2"	
	911026	1	-	NUT, 3/8"NC	
	904206	1	-	LOCKWASHER, 3/8"	
23	034152	1	-	CLIP, generator cable (single, closed type, 7/16" diam., 17/32" bolt hole)	
24	AM-8691	1	-	CLIP, air heater cable (single, closed type, 1/4" diam., 13/32" bolt hole)	
25	605163	3	-	CLIP, main wiring harness (single, closed type, 13/16" diam., 9/32" bolt hole)	
	905655	3	-	CAPSCREW, 1/4"NC x 1/2"	
	904204	3	-	LOCKWASHER, 1/4"	
26	------	1	-	CLIP, main wiring harness (single, closed type, 13/16" diam., 13/32" bolt hole, 3-3/8" long)(Not serviced)	
	903625	1	-	CAPSCREW, 1/4"NC x 3/4"	
	911024	1	-	NUT, 1/4"NC	
	904204	1	-	LOCKWASHER, 1/4"	
27	605168	1	-	CLIP, main wiring harness (single, open type, 3/4" diam., 9/32" bolt hole)	
	905658	1	-	CAPSCREW, 1/4"NC x 1-1/4"	
	911024	1	-	NUT, 1/4"NC	
	904204	1	-	LOCKWASHER, 1/4"	
				NOTE: Items 28 thru 42 were used only on graders serial No. 328 and up.	
28	034632	6	6	CLIP, brake cable (single, closed type, 5/16" diam., 13/32" bolt hole)	
	903628	6	6	CAPSCREW, 3/8"NC x 5/8"	
	904206	6	6	LOCKWASHER, 3/8"	
29	044044	4	4	CLIP, brake cable (single, closed type, 1/4" diam., 17/32" bolt hole)	
30	604769	2	2	SHIELD, electric brake cables (attached to tandem case) (4 used on graders equipped with 4-wheel brakes)	
31	605874	1	1	BRACKET, angle, battery cable and main wiring harness clip	
	903632	1	1	CAPSCREW, 3/8"NC x 1-1/2"	
	911026	1	1	NUT, 3/8"NC	
	904206	1	1	LOCKWASHER, 3/8"	
32	605841	6	6	CLIP, main wiring harness and battery cable (single, closed type, 3/4" diam., 9/32" bolt hole)	
	905655	5	5	CAPSCREW, 1/4"NC x 1/2"	
	905658	1	1	CAPSCREW, 1/4"NC x 1-1/4"	
	911024	1	1	NUT, 1/4"NC	
	904204	6	6	LOCKWASHER, 1/4"	
33	051348	3	3	CLIP, main wiring harness (single, closed type, 5/16" diam., 9/32" bolt hole)	
	905655	1	1	CAPSCREW, 1/4"NC x 1/2" (front clip)	
	904204	1	1	LOCKWASHER, 1/4"	

(Continued)

ITEM	PART NUMBER	QUANTITY AD3	QUANTITY AD4	DESCRIPTION	KIT NUMBER
34	041919	2	2	CLIP, main wiring harness (single, closed type, 1/2" diam., 11/32" bolt hole)	
	905655	1	1	CAPSCREW, 1/4"NC x 1/2" (front clip)	
	911024	1	1	NUT, 1/4"NC	
	904204	1	1	LOCKWASHER, 1/4"	
35	605880	3	3	CLIP, main wiring harness (single, open type, 3/4" diam.,two 13/32" bolt holes)	
	903627	6	6	CAPSCREW, 3/8"NC x 1/2"	
	904206	6	6	LOCKWASHER, 3/8"	
36	051179	1	1	CLIP, engine wiring harness (single, closed type, 3/8" diam., 13/32" bolt hole)(Used with Air Heater only)	
37	041225	1	1	CLIP, engine wiring harness (single, closed type, 1/2" diam., 13/32" bolt slot)	
	913593	1	1	SCREW, thread-cutting, hex-hd., 1/4" x 5/8"	
	904204	1	1	LOCKWASHER, 1/4"	
38	207091	1	1	CLIP, engine wiring harness (single, closed type, 1/2" diam., 13/32" bolt hole)	
39	040796	2	2	CLIP, engine wiring harness (single, closed type, 3/8" diam., 13/32" bolt hole)(3 used on graders prior to #2863)	
40	034632	1	1	CLIP, engine wiring harness (single, closed type, 5/16" diam., 13/32" bolt hole)	
41	U-479	2	2	CLIP, engine wiring harness sending unit cable (single, closed type, 3/16" diam., 13/32" bolt hole)	
42	605822	3	3	CLIP, engine wiring harness (single, closed type, 3/16" diam., 15/32" bolt hole)	
				NOTE: Following items were used on all graders.	
43	033043	2	2	CLIP, head light cable (single, closed type, 7/16" diam., 13/32" bolt hole)	
44	605169	1	1	CLIP, horn cable (single, closed type, 5/32" diam., 21/32" bolt hole)	
45	605160	2	2	CLIP, battery cable and main wiring harness (double, closed type, for one 5/8" diam. line and one 11/16" diam. line, 5/16" bolt hole)(4 used on graders prior to #328)	
	905655	1	1	CAPSCREW, 1/4"NC x 1/2" (3 used prior to #328)	
	905657	1	1	CAPSCREW, 1/4"NC x 1" (rear clip only)	
	911024	1	1	NUT, 1/4"NC	
	904204	2	2	LOCKWASHER, 1/4" (4 used prior to #328)	

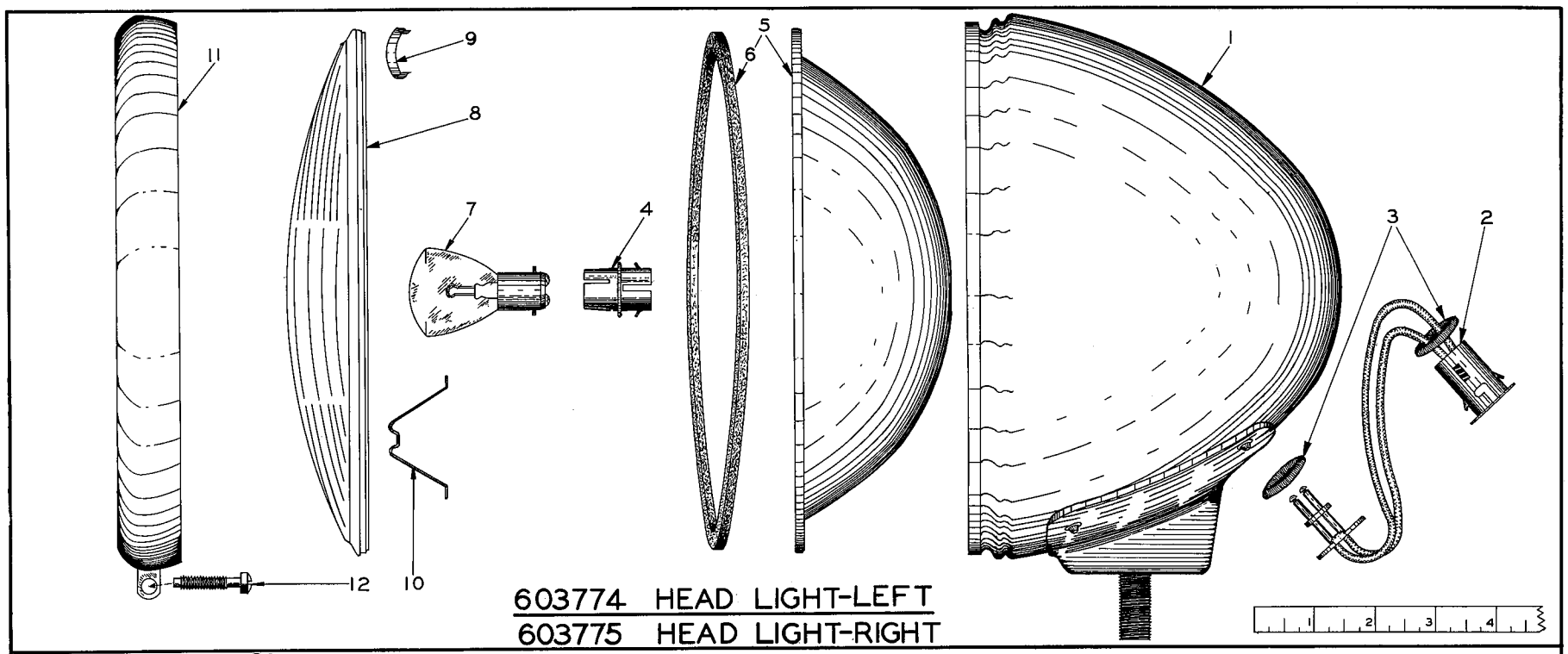

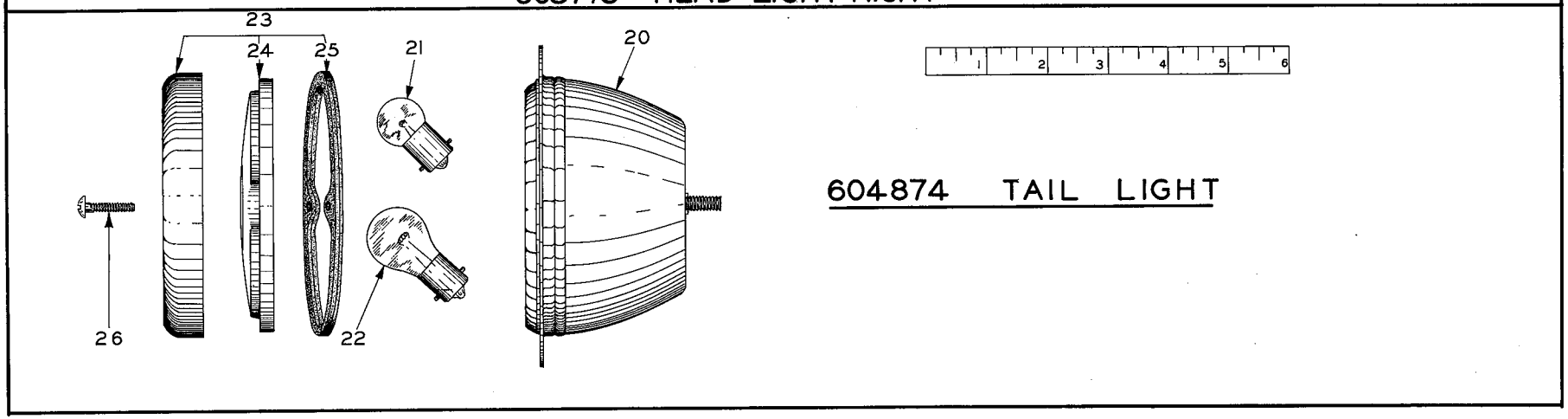

PLATE 1339B–HEAD LIGHT AND TAIL LIGHT PARTS

HEAD LIGHT PARTS
(See Plate 1339B)

ITEM	PART NUMBER	QUANTITY 603774	QUANTITY 603775	603774 LIGHT ASSEMBLY - LEFT (See pages 225 and 235) 603775 LIGHT ASSEMBLY - RIGHT (See page 225) DESCRIPTION	KIT NUMBER
1	------	1	1	BODY (Not serviced. Order complete LIGHT ASSEMBLY)	
2	605620	1	1	WIRING ASSEMBLY (Serviced only as a unit)	
3	605622	2	2	SPRING, socket retaining	
4	605621	1	1	SLEEVE, reflector socket	
5	605618	1	1	REFLECTOR ASSEMBLY (Includes item 6)	
6	605619	1	1	GASKET, lens	
7	054325	1	1	BULB, incandescent (double filament, 21 c.p., 12 volt)	
8	605596	1	1	LENS (glass)	
9	033231	1	1	CLIP, lens retaining	
10	050889	2	2	SPRING, lens retaining	
11	605614	1	1	MOLDING	
12	042600	1	1	SCREW, molding	

TAIL LIGHT PARTS
(See Plate 1339B)

604874 LIGHT ASSEMBLY (See page 225)

ITEM	PART NUMBER	QTY.	DESCRIPTION	KIT NUMBER
20	------	1	BODY (Not serviced. Order complete LIGHT ASSEMBLY)	
21	031806	1	BULB, incandescent, tail light (single contact, 3 c.p., 12 volt)	
22	054324	1	BULB, incandescent, stop light (single contact, 15 c.p., 12 volt)	
23	605606	1	DOOR ASSEMBLY (Includes items 24 and 25)	
24	605604	1	LENS, ruby	
25	054289	1	GASKET, lens	
26	209826	1	SCREW, door	

NOTE: Quantities indicated are for one light only.

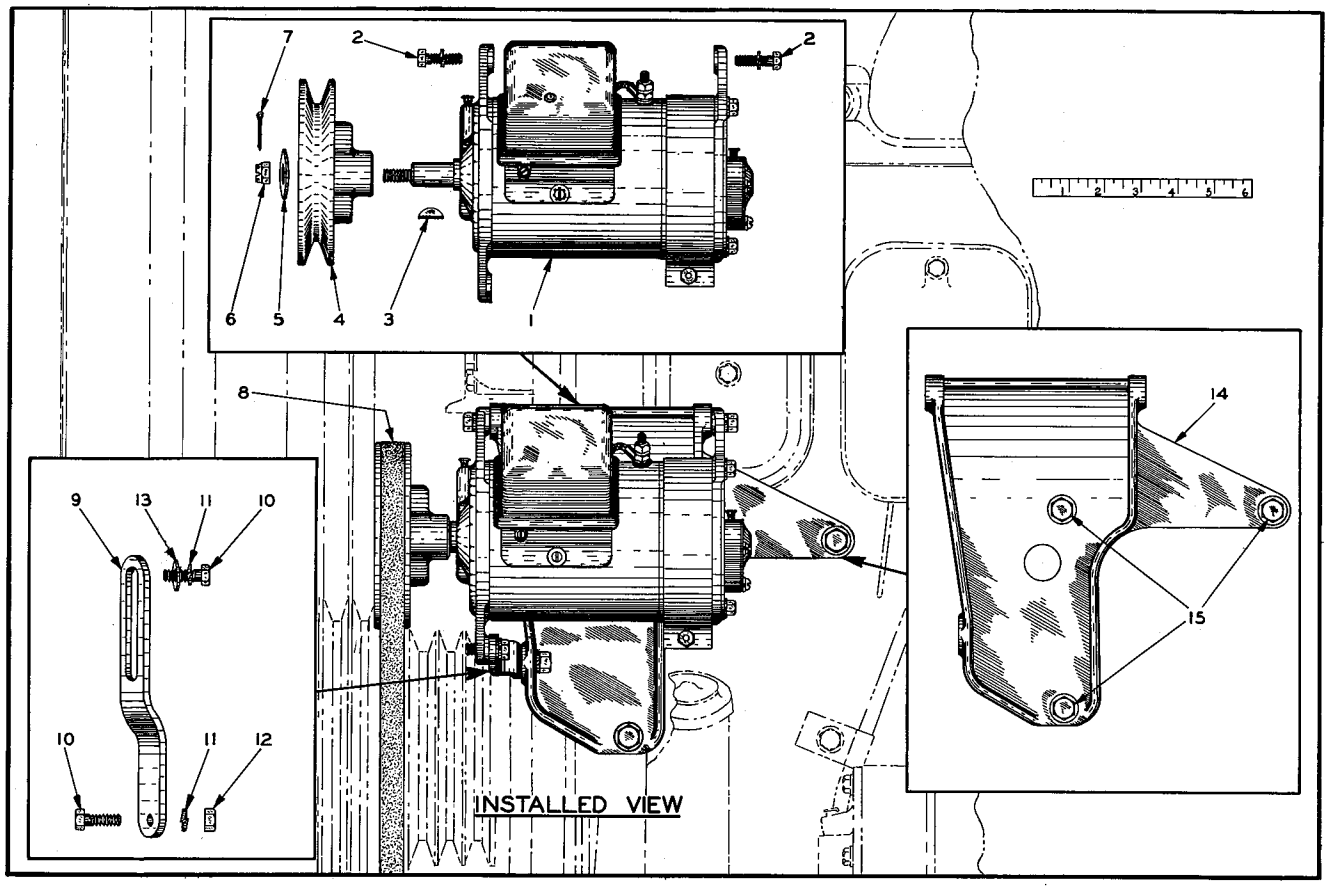

PLATE 1741 — GENERATOR

GENERATOR
(See Plate 1741)

ITEM	PART NUMBER	QTY.	DESCRIPTION	KIT NUMBER
1	605199	1	GENERATOR ASSEMBLY, electric (Includes items 3, 5, and 6) (DELCO-REMY #1101749. Order parts from local United Motor Service dealer)	
2	903772	2	CAPSCREW, 5/16"NC x 1"	
	904205	2	LOCKWASHER, 5/16"	
3	905121	1	KEY, #5 woodruff, 1/8" x 5/8"	
4	040128	1	PULLEY, driving	
5	900818	1	WASHER, plain, U.S. Std., 1/2"	
6	911054	1	NUT, castle, 1/2"NF	
7	900801	1	PIN, cotter, 3/32" x 3/4"	
8	040549	1	BELT, driving (21/32" wide x 42" long)	
9	3222369	1	LINK, belt adjusting	
10	903772	2	CAPSCREW, 5/16"NC x 1"	
11	904205	2	LOCKWASHER, 5/16"	
12	911025	1	NUT, 5/16"NC	
13	901165	1	WASHER, plain, U.S. Std., 5/16"	
14	605210	1	BRACKET, mounting	
15	041250	3	CAPSCREW, 7/16"NC x 1-1/4"	
	904207	3	LOCKWASHER, 7/16"	

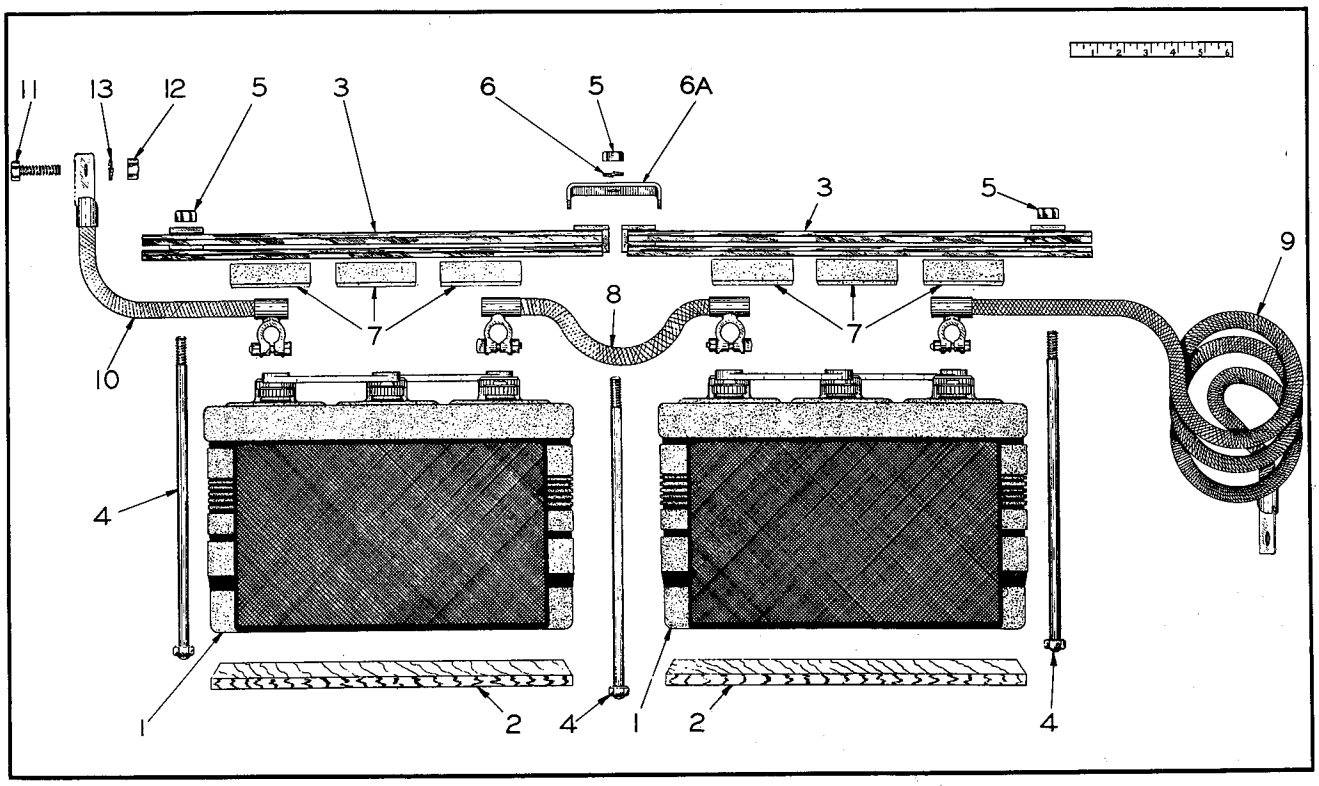

PLATE 1743B—— BATTERIES AND CABLES

BATTERIES AND CABLES
(See Plate 1743B)

ITEM	PART NUMBER	QTY.	DESCRIPTION	KIT NUMBER
1	------	2	BATTERY, storage, 6 volts, 21 plates (Autolite #5H-170R or Exide #XH-21. Order from local battery dealer)	
2	604857	2	BOARD, bottom (1/2" x 6-3/4" x 13-3/8")	
3	604858	2	HOLD-DOWN, battery	
4	055044	3	STUD ASSEMBLY (Includes riveted NUT)	
5	911026	3	NUT, 3/8"NC	
6	904206	1	LOCKWASHER, 3/8"	
6A	066175	1	CLAMP, battery hold-down	
7	042534	12	BLOCK, battery hold-down (rubber, 3" long)	
8	605159	1	CABLE, battery connecting (10" long)	
9	604856	1	CABLE, battery to starting motor (60-1/2" long)	
10	605158	1	CABLE, battery to ground (11" long)	
11	903632	1	CAPSCREW, 3/8"NC x 1-1/2"	
12	911026	1	NUT, 3/8"NC	
13	904206	1	LOCKWASHER, 3/8"	

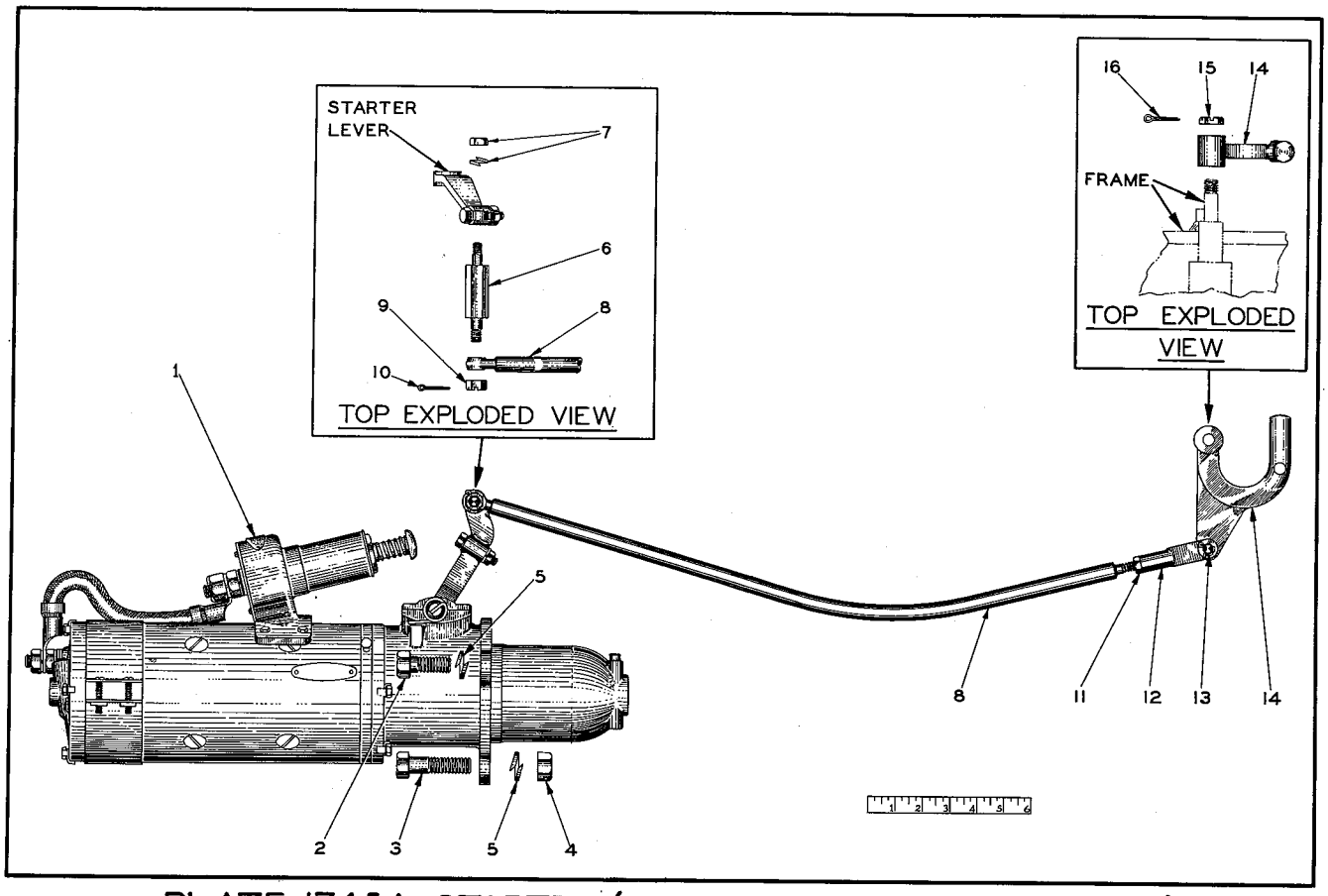

PLATE 1745A—STARTER (AD4 AND EARLY AD3 GRADERS)

STARTER
(See Plate 1745A)

USAGE: Model AD4 Graders, and Model AD3 Graders serial #328 thru #493. See page 233 for parts applicable to other Model AD3 Graders.

ITEM	PART NUMBER	QUANTITY AD3	QUANTITY AD4	DESCRIPTION	KIT NUMBER
1	034917	1	1	MOTOR, starting (DELCO-REMY #1108811. Was formerly #1108714. Order parts from local United Motor Service dealer) (Incl. item 5A)	also #D14
2	035440	2	2	CAPSCREW, 5/8"NC x 1-1/2"	
3	035248	1	1	CAPSCREW, 5/8"NF x 2-1/4"	
4	911044	1	1	NUT, 5/8"NF	
5	904209	3	3	LOCKWASHER, 5/8"	
5A	034917	1	1	SWITCH, starting motor (Delco-Remy #407C Order parts from local United Motor Service Dealer)	
6	054054	1	1	EXTENSION, starting motor lever	
7	911025	1	1	NUT, 5/16"NC	
	904205	1	1	LOCKWASHER, 5/16"	
8	054055	1	1	ROD, operating (Used on graders prior to #3314)	
	068195	-	1	ROD, operating (Used on graders #3314 and up)	
9	903416	1	1	NUT, slotted, 3/8"NC	
10	900802	1	1	PIN, cotter, 3/32" x 1"	
11	911048	1	1	NUT, jam, 3/8"NF	
12	033056	1	1	YOKE, operating rod	
13	033069	1	1	PIN, operating rod	
	900942	1	1	PIN, cotter, 3/32" x 5/8"	
14	605733	1	1	PEDAL, operating	
15	914382	1	1	NUT, jam, slotted, 1/2"NC	
16	900806	1	1	PIN, cotter, 1/8" x 1"	

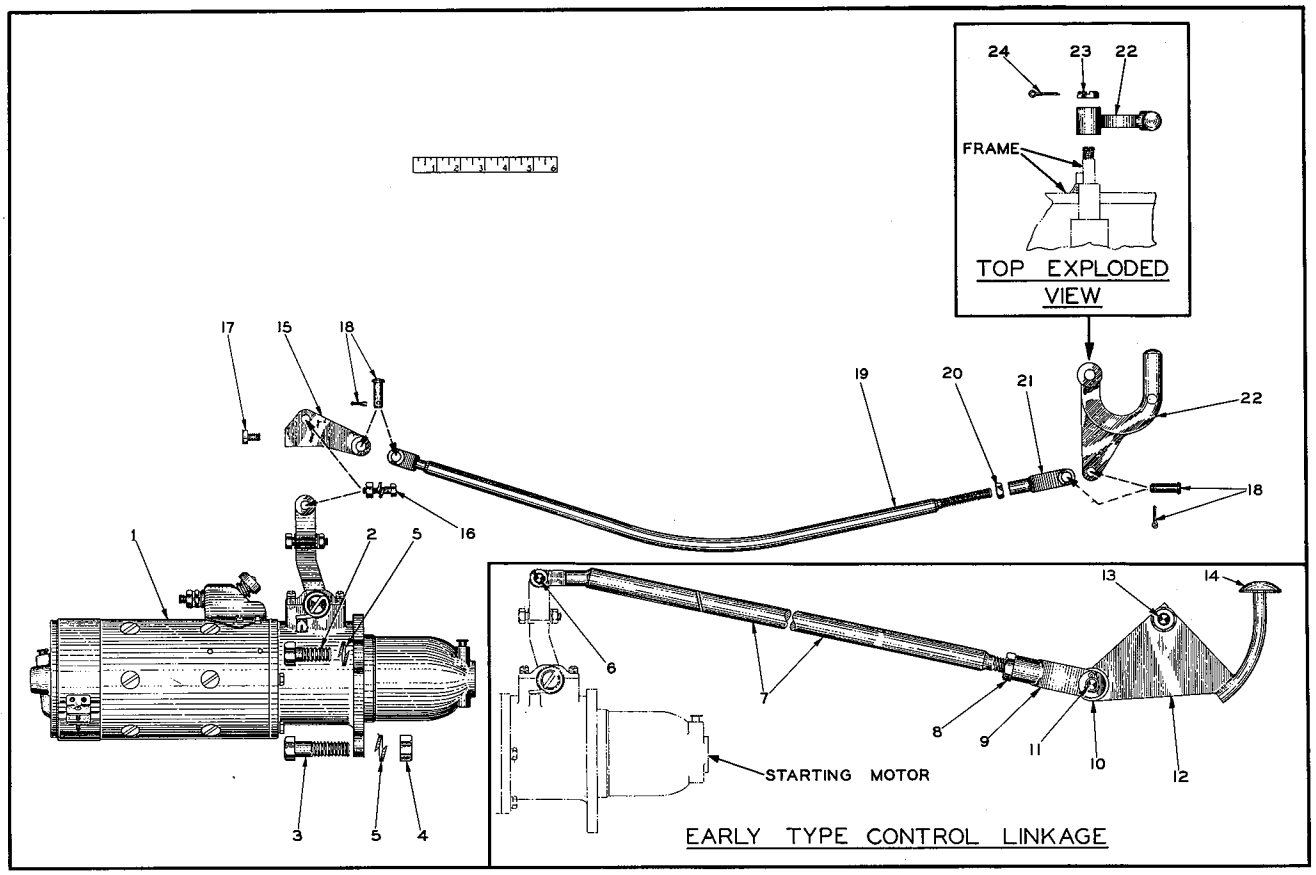

PLATE 1744A——STARTER (AD3 GRADERS)

STARTER
(See Plate 1744A)

USAGE: All Model AD3 Graders except serial Nos. 328 thru 493.
See page 232 for parts applicable to these machines.

ITEM	PART NUMBER	QTY.	DESCRIPTION	KIT NUMBER
1	605200	1	MOTOR, starting (DELCO-REMY #1109114. Order parts from local United Motor Service dealer) (Incl. item 5A)	
2	035440	2	CAPSCREW, 5/8"NC x 1-1/2"	
3	035248	1	CAPSCREW, 5/8"NF x 2-1/4"	
4	911044	1	NUT, 5/8"NF	
5	904209	3	LOCKWASHER, 5/8"	
5A	078040	1	SWITCH, starting motor (Delco-Remy #1857519. Order parts from local United Motor Service Dealer)	
			NOTE: Items 6 thru 14 were used on graders prior to serial #328 only.	
6	605431	1	PIN, operating rod (5/16" diam.)	
	900942	1	PIN, cotter, 3/32" x 5/8"	
7	604865	1	ROD, operating	
8	911036	1	NUT, jam, 5/8"NC	
9	600665	1	YOKE, operating rod (5/8"NC)	
10	900818	2	WASHER, plain, U.S. std., 1/2"	
11	604759	1	PIN, operating rod yoke (1/2" diam.)	
	900806	1	PIN, cotter, 1/8" x 1"	
12	604869	1	PEDAL, operating	
13	035712	1	CAPSCREW, 1/2"NC x 2-1/4"	
	911035	1	NUT, jam, 1/2"	
	904208	1	LOCKWASHER, 1/2"	

(Continued)

ITEM	PART NUMBER	QTY.	DESCRIPTION	KIT NUMBER
14	604872	1	BUTTON, operating pedal	
			NOTE: Items 15 thru 24 were used on graders after serial #493. See page 232 for parts applicable to graders #328 thru 493.	
15	605734	1	EXTENSION, starting motor lever	
16	905662	1	CAPSCREW, 5/16"NC x 1-1/8"	
	911025	1	NUT, 5/16"NC	
	904205	1	LOCKWASHER, 5/16"	
17	901275	1	SETSCREW, square head, cup point, 3/8"NC x 1/2"	
18	033069	2	PIN, operating rod (3/8" diam.)	
	900942	2	PIN, cotter, 3/32" x 5/8"	
19	068783	1	ROD, operating	
20	911048	1	NUT, jam, 3/8"NF	
21	033056	1	YOKE, operating rod (3/8"NF)	
22	605733	1	PEDAL, operating	
23	914382	1	NUT, jam, slotted, 1/2"NC	
24	900806	1	PIN, cotter, 1/8" x 1"	

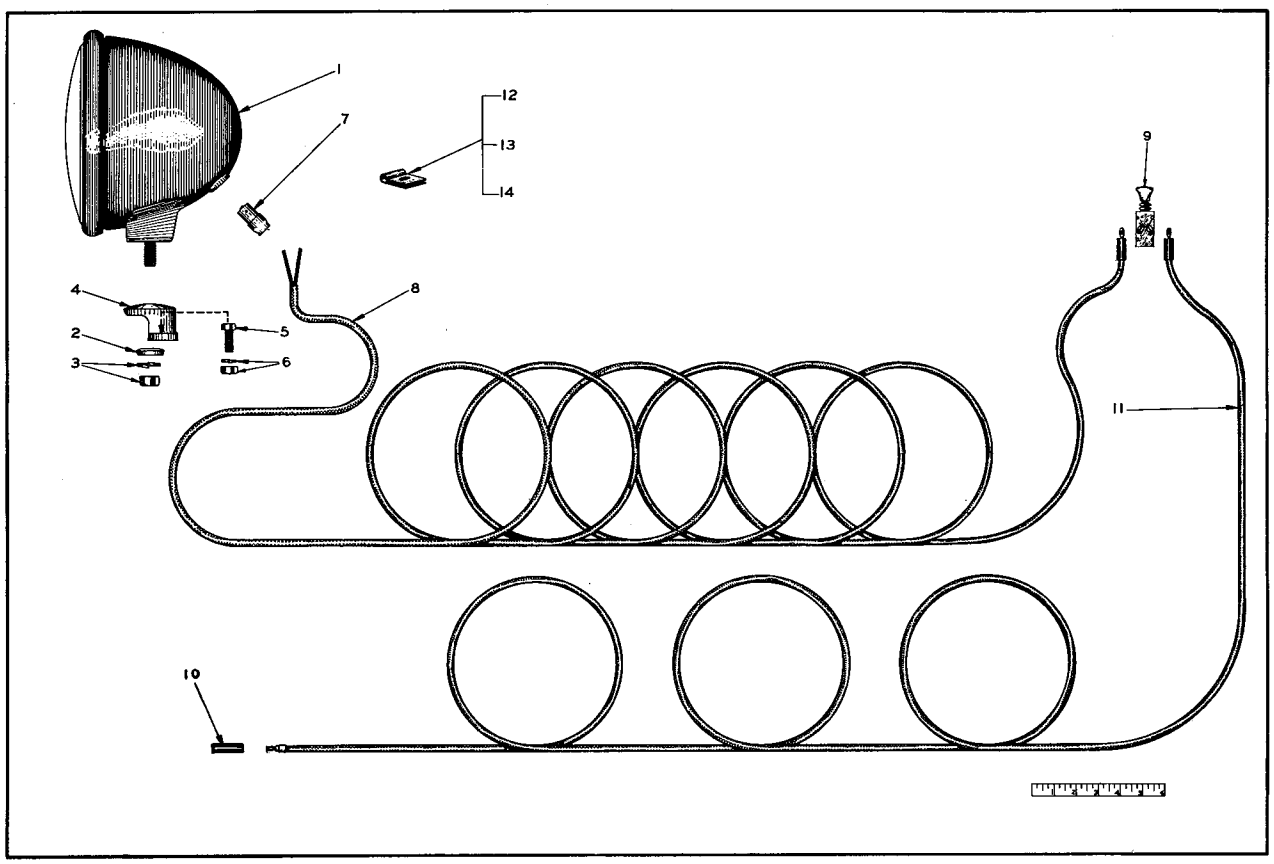

PLATE 2120 —FLOOD LIGHT

REAR FLOOD LIGHT
(See Plate 2120)

USAGE: Special Equipment. Applicable to AD3 and AD4 Graders.

ITEM	PART NUMBER	QTY.	DESCRIPTION	KIT NUMBER
1	603774	1	LIGHT ASSEMBLY, rear flood (See page 229 for repair parts)	
2	053635	1	WASHER, ball	
3	911043	1	NUT, 1/2"NF	
	904208	1	LOCKWASHER, 1/2"	
4	601376	1	BRACKET, flood light mounting	
5	903630	2	CAPSCREW, 3/8"NC x 1"	
6	911026	2	NUT, 3/8"NC	
	904206	2	LOCKWASHER, 3/8"	
7	603684	1	PLUG ASSEMBLY (Serviced only as a unit)	
8	061936	1	CABLE, flood light to switch (118" long)	
9	605411	1	SWITCH, push-pull	
10	048142	1	CONNECTOR, switch cable to wiring harness	
11	056694	1	CABLE, switch to connector (48" long)	
12	U-479	2	CLIP, flood light cable (single, closed type, 3/16" diam., 13/32" bolt hole)	
13	AM-8763	2	CLIP, flood light cable (single, closed type, 3/16" diam., 9/32" bolt hole)	
14	034632	1	CLIP, flood light cable (single, closed type, 5/16" diam., 13/32" bolt hole)	

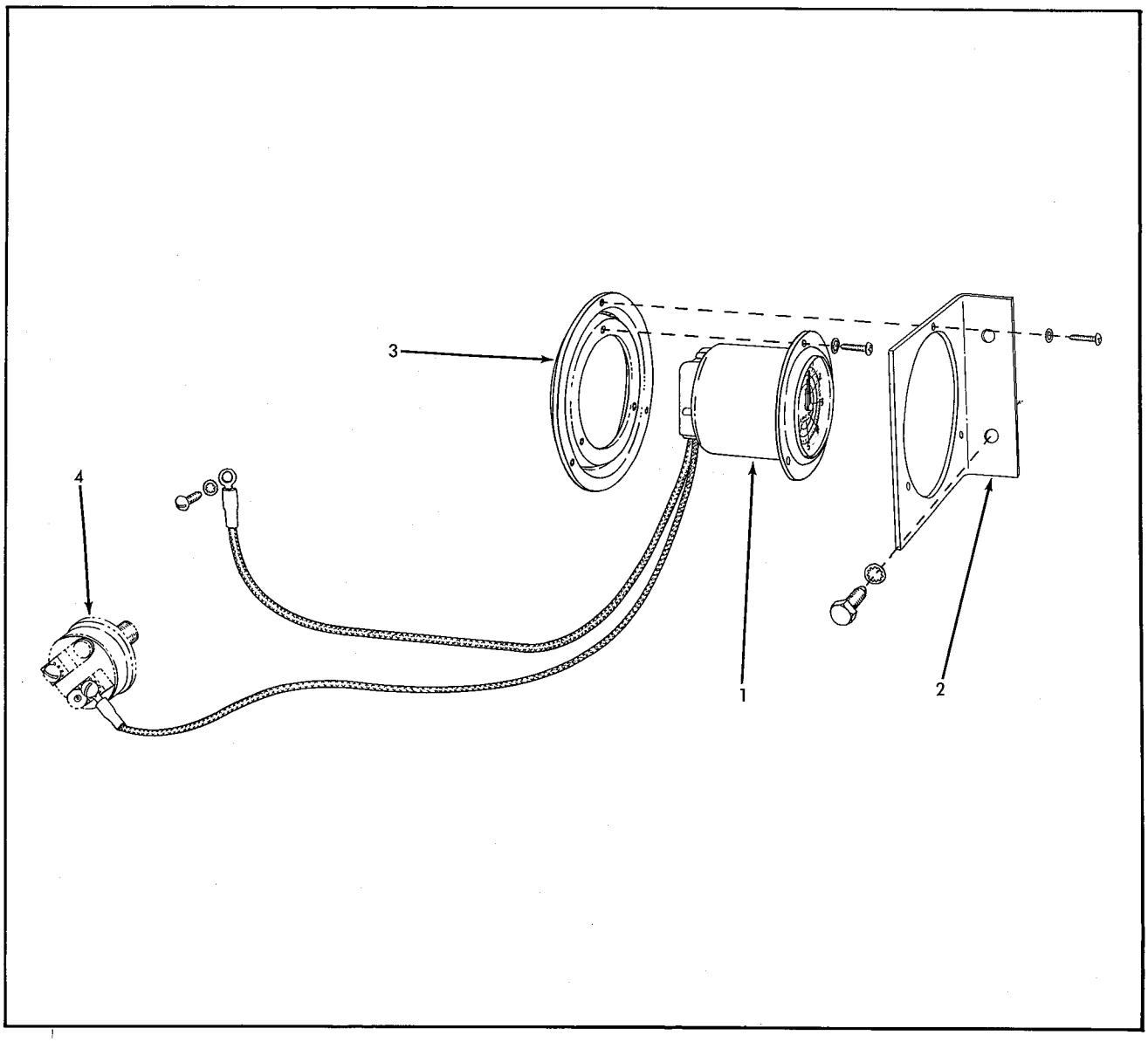

HOUR METER

USAGE: Special Equipment. Applicable to Model AD3 and AD4 Graders

ITEM	PART NUMBER	QTY.	DESCRIPTION	KIT NUMBER
1	044902	1	METER, hour (See note below)	
	903752	3	SCREW, machine, #6-32NC x 1/2"	
	912729	3	LOCKWASHER, internal teeth, #6	
	907618	1	SCREW, thread-cutting, #8-32NC x 1/4"	For cable terminal
	912739	1	LOCKWASHER, internal teeth, #8	For cable terminal
2	069317	1	BRACKET, mounting	
	915803	2	SCREW, thread-cutting, hex-hd., 5/16"NC x 5/8"	
	904205	2	LOCKWASHER, 5/16"	
3	066467	1	DAMPER, vibration	
	903752	3	SCREW, machine, #6-32NC x 1/2"	
	912729	3	LOCKWASHER, internal teeth, #6	
4	------	1	SWITCH, pressure (See Electrical System)	

NOTE: Meter carries manufacturer's warranty and in case of failure should be returned to John W. Hobbs Corporation, Springfield, Illinois, for repairs.

SPECIAL EQUIPMENT

	PAGE NUMBER
Bumper	269
Cab Enclosures	249, 253
Cab Heater	246
Canopy	249, 251
Defroster Fan	257
Engine Pre-Heater	263
Grease Gun and Parts	268
Hood Side Plates	269
Hour Meter	236
Moldboard Extensions	178
Odometer	265
Radiator Curtain	269
Rear Flood Light	235
Scarifier	238, 239, 241
Scarifier Control Shafts	245
Scarifier Lift	243
Tire Pump (Power-driven)	259, 261
Tools	267
Tool Box	267
Transfers (Scarifier, tire pump, tool box)	142
Windshield Wiper	256

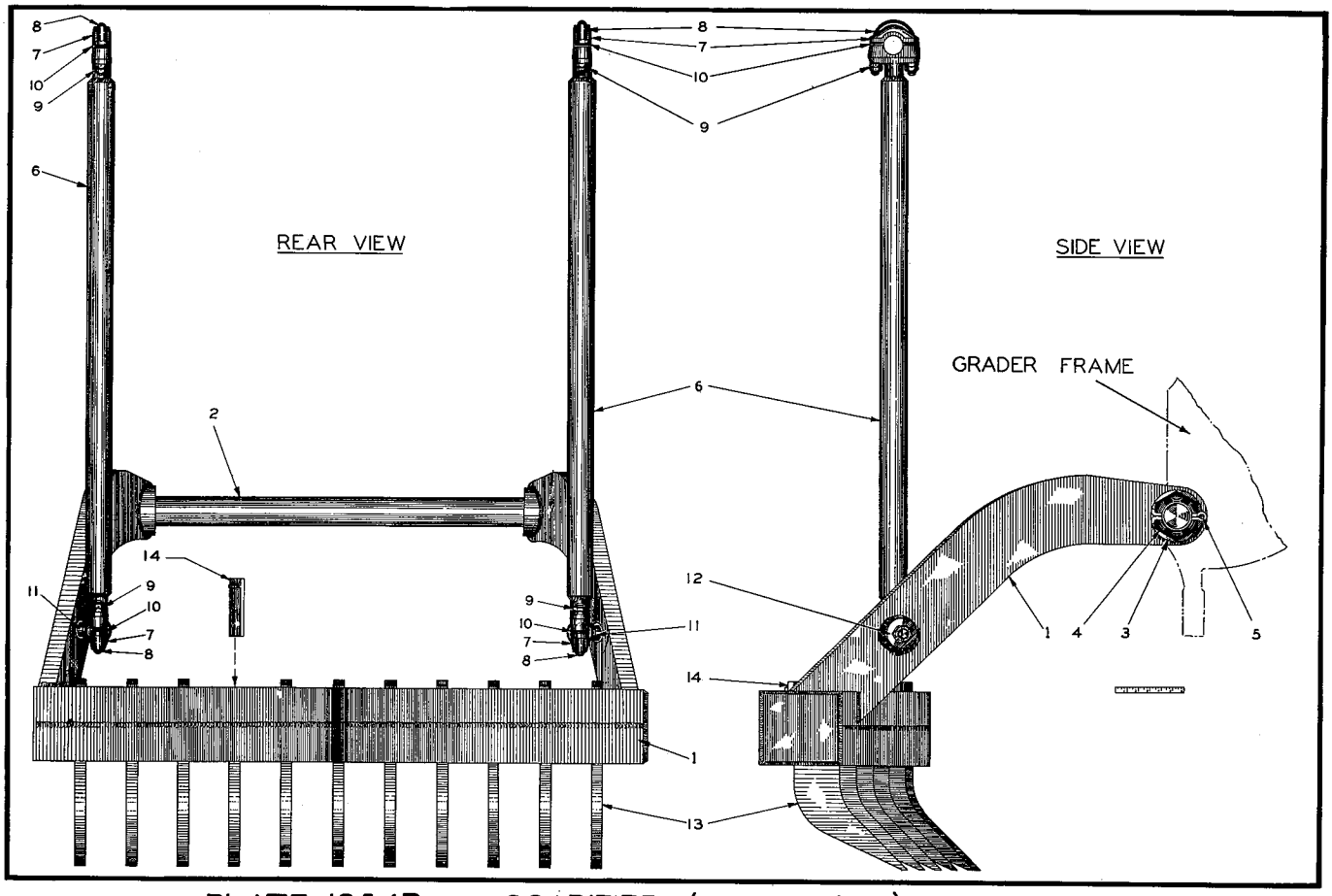

PLATE 1354B——SCARIFIER (FIRST TYPE)

SCARIFIER
(See Plate 1354B)

USAGE: Special Equipment. Not applicable to Graders with 13.00-24" Front Tires. Was used on early Model AD3 Graders only (Scarifiers prior to serial No. 1G-326)

ITEM	PART NUMBER	QTY.	DESCRIPTION	KIT NUMBER
1	------	1	FRAME (Not serviced. Order items 1 thru 10 as listed on page 241)	
2	605135	1	SHAFT, frame pivot	
3	603233	2	WASHER, plain	
4	601997	2	NUT (hex, slotted, 2-1/2"NF)	
5	911232	2	PIN, cotter, 1/2" x 4-1/2"	
6	605148	2	LINK, scarifier lift (51-1/2" long)	
7	053986	4	CAP, lift link	
8	605665	4	U-BOLT (5/8"NF)	
9	911036	16	NUT, jam, 5/8"NC (No longer used)	
	911049	16	NUT, jam, 5/8"NF (Replaced NUT 911036)	
10	053992	32	SHIM, lift link cap (Use as required)	
11	601972	2	PIN, ball, scarifier lift	
	914465	2	FITTING, lubricating, straight, 1/8"NPT	
12	900822	2	WASHER, plain, U.S. std., 1"	
	911174	2	NUT, jam, slotted, 1"NF	
	900808	2	PIN, cotter, 1/8" x 1-1/2"	
13	------	11	TOOTH, scarifier (Not serviced. Order TOOTH 062160 and SHANK 062159)	
14	602522	11	KEY, scarifier tooth retaining	

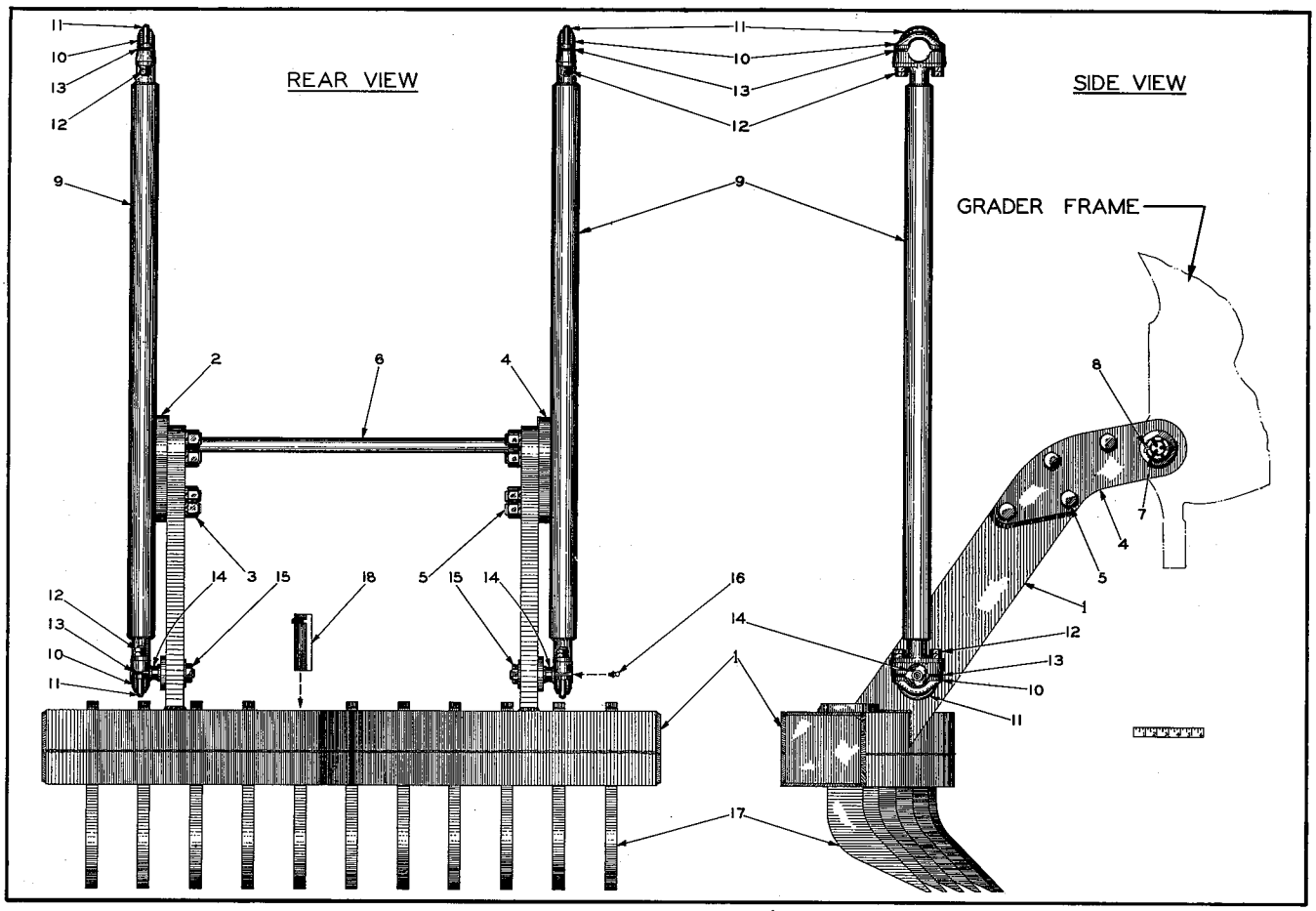

PLATE 1771A—SCARIFIER (SECOND TYPE)

SCARIFIER
(See Plate 1771A)

USAGE: Special Equipment. Used on Model AD3 and AD4 Graders. (Scarifiers serial No. 1G-326 thru 1G-1147)

ITEM	PART NUMBER	QTY.	DESCRIPTION	KIT NUMBER
1	------	1	FRAME (Not serviced. Order items 1, 2, 3, 15 and 16 as listed on page 241)	
2	056927	1	HUB, frame - left	
3	036546	4	CAPSCREW, 1"NF x 4-1/4"	
	911047	4	NUT, 1"NF	
	910916	4	LOCKWASHER, 1"	
4	056928	1	HUB, frame - right	
5	036546	4	CAPSCREW, 1"NF x 4-1/4"	
	911047	4	NUT, 1"NF	
	910916	4	LOCKWASHER, 1"	
6	056919	1	SHAFT, frame pivot	
7	912841	2	NUT, slotted, 1-1/4"NF	
8	900812	2	PIN, cotter, 3/16" x 1-3/4"	
9	056922	2	LINK, scarifier lift (54-1/2" long)	
10	053986	4	CAP, lift link	
11	605665	4	U-BOLT	
12	911049	16	NUT, jam, 5/8"NF	
13	053992	32	SHIM, lift link cap (Use as required)	
14	601972	2	PIN, ball, scarifier lift	
15	900822	2	WASHER, plain, U.S. Std., 1"	
	911174	2	NUT, jam, slotted 1"NF	
	900808	2	PIN, cotter, 1/8" x 1-1/2"	

(Continued

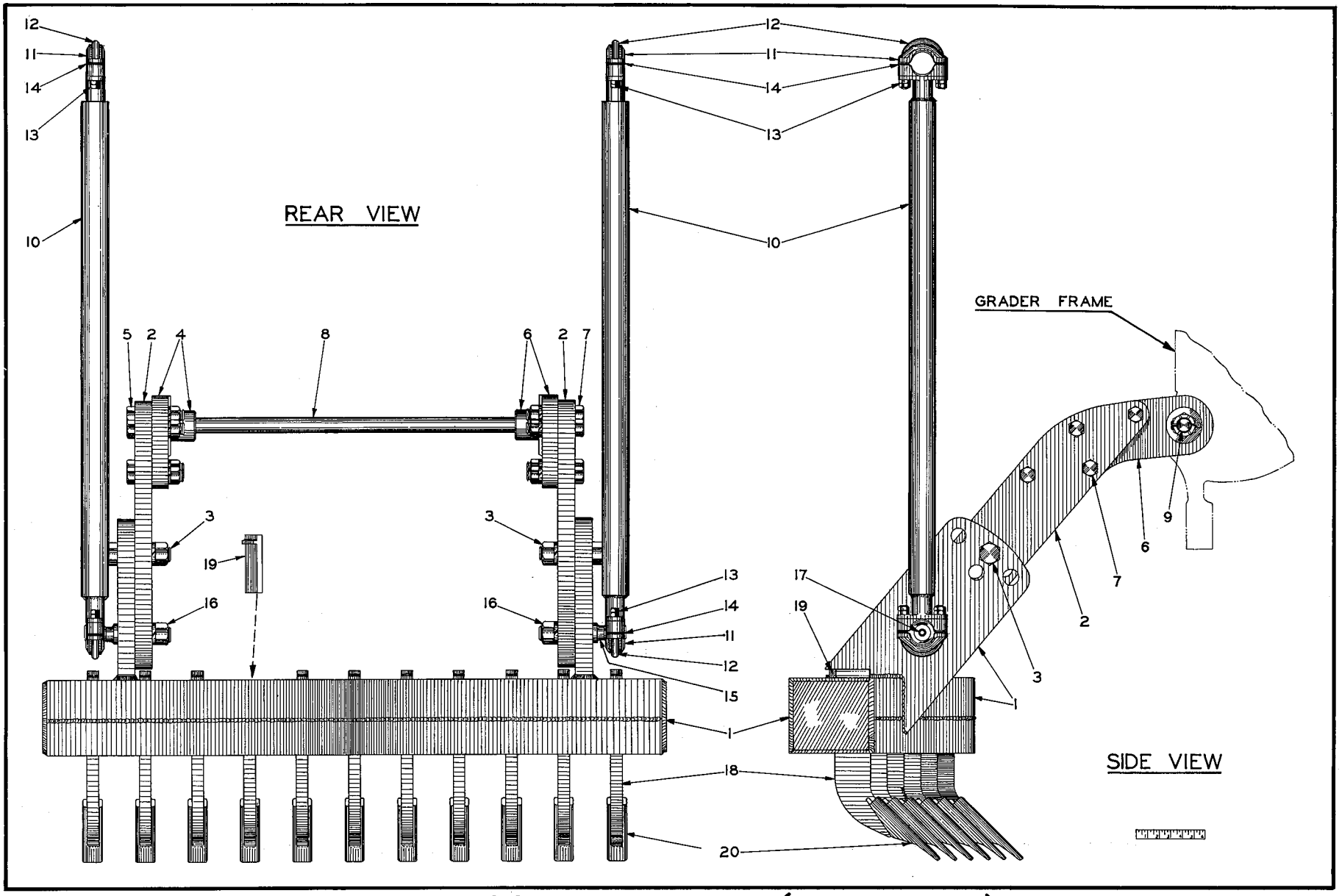

PLATE 1892A—SCARIFIER (THIRD TYPE)

SCARIFIER (Cont'd)
(See Plate 1771A)

ITEM	PART NUMBER	QTY.	DESCRIPTION	KIT NUMBER
16	914465	2	FITTING, lubricating, straight, 1/8"NPT	
17	------	11	TOOTH, scarifier (Discontinued on scarifier #1509. Order TOOTH 062160 and SHANK 062159)	
18	602522	11	KEY, scarifier tooth retaining	

SCARIFIER
(See Plate 1892A)

USAGE: Special Equipment. Applicable to all Model AD3 and AD4 Graders. (Scarifiers serial No. 1G-1148 and up)

ITEM	PART NUMBER	QTY.	DESCRIPTION	KIT NUMBER
1	058753	1	FRAME	
2	058751	2	ARM, frame adjustment	
3	053251	2	CAPSCREW, 1-1/4"NF x 4-1/2"	
	904210	2	LOCKWASHER, 1-1/4"	
	913097	2	NUT, 1-1/4"NF	
4	056927	1	HUB, frame - left	
5	036546	4	CAPSCREW, 1"NF x 4-1/4"	
	911047	4	NUT, 1"NF	
	910916	4	LOCKWASHER, 1"	
6	056928	1	HUB, frame - right	
7	036546	4	CAPSCREW, 1"NF x 4-1/4"	
	911047	4	NUT, 1"NF	
	910916	4	LOCKWASHER, 1"	
8	056919	1	SHAFT, frame hub pivot	
9	912841	2	NUT, slotted, 1-1/4"NF	
	904381	2	PIN, cotter, 3/16" x 2-1/4"	
10	056922	2	LINK, scarifier lift (54-9/16" long)	
11	053986	4	CAP, lift link	
12	605665	4	U-BOLT	
13	911049	16	NUT, jam, 5/8"NF	
14	053992	32	SHIM, lift link cap (Use as required)	
15	058752	2	PIN, ball, scarifier lift	
16	913097	2	NUT, 1-1/4"NF	
	904210	2	LOCKWASHER, 1-1/4"	
17	914465	2	FITTING, lubricating, straight, 1/8"NPT	
18	062159	11	SHANK, scarifier tooth	
19	602522	11	KEY, shank retaining	
20	062160	11	TOOTH, scarifier	

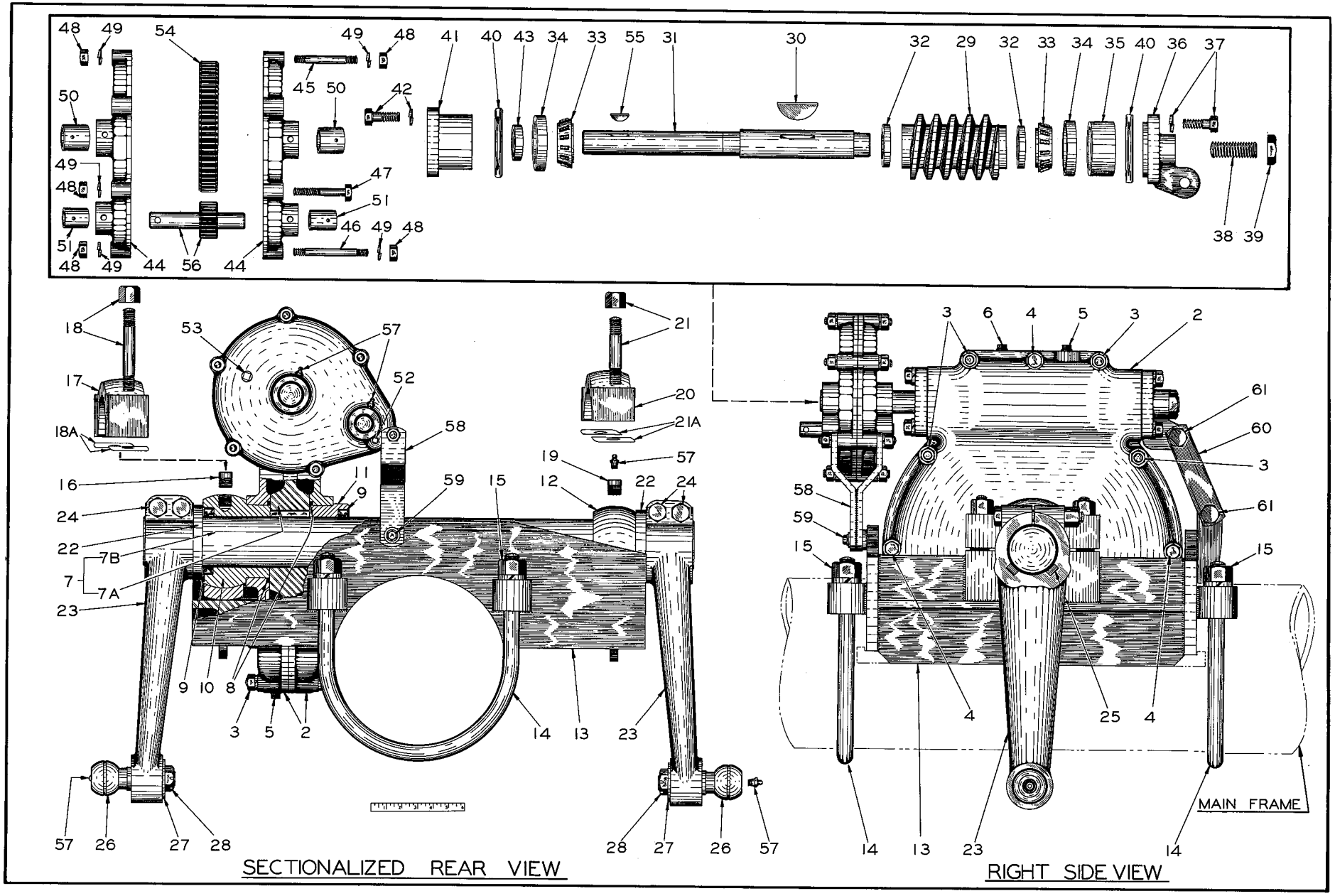

PLATE 1383A-SCARIFIER LIFT

SCARIFIER LIFT
(See Plate 1383A)

USAGE: Special Equipment. Applicable to Model AD3 and AD4 Graders.

ITEM	PART NUMBER	QTY.	DESCRIPTION	KIT NUMBER
1	605151	1	LIFT ASSEMBLY - complete (Consists of items 2 thru 61)	
2	603015	1	HOUSING ASSEMBLY, worm gear (Consists of 2 HOUSINGS, 5 STUDS 601825, 10 NUTS 911028 and 10 LOCKWASHERS 904208)	
3	601825	5	STUD	
	911028	10	NUT, 1/2"NC	
	904208	10	LOCKWASHER, 1/2"	
4	910257	5	CAPSCREW, 1/2"NC x 4-3/4"	
	911028	5	NUT, 1/2"NC	
	904208	5	LOCKWASHER, 1/2"	
5	912725	2	PLUG, pipe, 1/2"NPT	
6	050839	1	PLUG, vent, worm gear housing	
7	605302	1	GEAR AND SHAFT ASSEMBLY (Used on scarifiers prior to #1G-181 & after	#1G-2860
	053191	1	GEAR AND SHAFT ASSEMBLY (Used on scarifiers #1G-181 thru #1G-2860	
7A	602652	1	GEAR only (right helix)(Used on scarifiers prior to #1G-181 & after #1G-2860	
	602653	1	GEAR only (left helix)(Used on scarifiers #1G-181 thru #1G-2860	
	601833	2	KEY	
7B	603106	1	SHAFT only	
8	602640	2	SEAL, oil, worm gear housing (cork)(Used on scarifiers prior to #1G-181)	
9	066309	2	SEAL, oil, worm gear shaft (Used on scarifiers #1G-181 and up)	
10	050904	1	BEARING, worm gear shaft - left (When required for scarifiers prior to #1G-181 also order 1 PIN 605308 and 1 SEAL 031163)	
11	050912	1	BEARING, worm gear shaft - intermediate (When required for scarifiers prior to #1G-181 also order SEAL 031163)	
	914465	1	FITTING, lubricating, straight, 1/8"NPT (Used on scarifiers prior to #1G-181 only)	
12	605328	1	BEARING, worm gear shaft - right	
13	605296	1	SUPPORT, scarifier lift	
14	603107	2	U-BOLT	
15	911032	4	NUT, 1"NC	
	910916	4	LOCKWASHER, 1"	
16	605307	1	NIPPLE, lubricating, worm gear shaft left bearing (Used on scarifiers prior to #1G-181)	
	914465	1	FITTING, lubricating, straight, 1/8"NPT	
	605308	1	PIN, anchor, worm gear shaft left bearing (Used on scarifiers #1G-181 and up)	
17	601288	1	CAP, worm gear shaft left bearing	
18	602207	2	STUD (3/4"NC x 5")	Used on scarifiers prior to #1G-330
	911030	2	NUT, 3/4"NC	Used on scarifiers prior to #1G-330
	904369	2	LOCKWASHER, 3/4"	Used on scarifiers prior to #1G-330
	050913	2	STUD (3/4"NF x 5-3/16")	Used on scarifiers #1G-330 and up
	012767	2	NUT, high, 3/4"NF	Used on scarifiers #1G-330 and up
18A	061181	6	SHIM, left bearing cap (1/32" thick. Use as req'd)	
	061182	10	SHIM, left bearing cap (.013" thick. Use as req'd)	
19	605307	1	NIPPLE, lubricating, worm gear shaft right bearing	

(Continued)

ITEM	PART NUMBER	QTY.	DESCRIPTION	KIT NUMBER
20	601717	1	CAP, worm gear shaft right bearing	
21	602209	2	STUD (3/4"NC x 4-1/4")	Used on scarifiers prior to #1G-330
	911030	2	NUT, 3/4"NC	
	904369	2	LOCKWASHER, 3/4"	
	050905	2	STUD (3/4"NF x 4-11/16")	Used on scarifiers #1G-330 and up
	012767	2	NUT, high, 3/4"NF	
21A	061179	10	SHIM, right bearing cap (.013" thick. Use as req'd)	
	061180	6	SHIM, right bearing cap (1/32" thick. Use as req'd)	
22	605139	2	SPACER, lift crank	
23	063989	2	CRANK, scarifier lift (When required for scarifiers prior to #1964 also order 2 CAPSCREWS 051655)	
24	051655	4	CAPSCREW, 3/4"NF x 5-1/4"	
	012767	4	NUT, high, 3/4"NF	
25	601833	4	KEY, lift crank (woodruff, 3/4" x 2-7/16")	
26	601972	2	PIN, ball, lift crank	
27	900822	2	WASHER, plain, U.S. std., 1"	
28	911174	2	NUT, jam, slotted, 1"NF	
	900808	2	PIN, cotter, 1/8" x 1-1/2"	
29	601455	1	WORM (right hand)(Scarifiers prior to #1G-181 & after #1G-2860	
	601456	1	WORM (left hand)(Scarifiers #1G-181 thru #1G-2860	
30	911238	1	KEY, #U woodruff, 7/16" x 2-3/4"	
31	603014	1	SHAFT, worm	
32	602641	2	SPACER, worm	
33	604389	2	CONE ASSEMBLY, worm shaft bearing	
34	U-2573	2	CUP, worm shaft bearing	
35	601838	1	PLUG, worm shaft bearing adjustment	
36	601663	1	CAP, worm shaft front bearing	
37	903792	4	CAPSCREW, 5/8"NC x 1-3/4"	
	904209	4	LOCKWASHER, 5/8"	
38	911229	1	SETSCREW, socket head, oval point, 1"NC x 3"	
39	911038	1	NUT, jam, 1"NC	
40	601839	2	GASKET, worm shaft bearing caps	
41	602989	1	CAP, worm shaft rear bearing	
42	903792	4	CAPSCREW, 5/8"NC x 1-3/4"	
	904209	4	LOCKWASHER, 5/8"	
43	603462	1	SEAL, oil, worm shaft	
44	602531	1	HOUSING ASSEMBLY, reduction gear (Consists of 2 HOUSINGS, 2 BUSHINGS 053258, 2 BUSHINGS 053259, 2 STUDS 602028, 4 NUTS 911028 and 4 LOCKWASHERS 904208)	
45	602028	1	STUD (1/2"NC x 4")	
46	605303	1	STUD (1/2"NC x 4-3/4")	
47	905668	4	CAPSCREW, 1/2"NC x 3-1/4"	
48	911028	8	NUT, 1/2"NC	
49	904208	8	LOCKWASHER, 1/2"	
50	053258	2	BUSHING, reduction gear housing (Scarifiers #1G-251 and up)	
51	053259	2	BUSHING, reduction gear housing (Scarifiers #1G-251 and up)	
52	901652	1	PLUG, pipe, 1/4"NPT (No longer used)	
53	901653	1	PLUG, pipe, 3/8"NPT	

(Continued)

ITEM	PART NUMBER	QTY.	DESCRIPTION	KIT NUMBER
54	601684	1	GEAR, reduction, worm shaft (48 teeth)	
55	911201	1	KEY, #E woodruff, 3/8" x 1-1/4"	
56	602510	1	GEAR AND SHAFT ASSEMBLY, reduction (Serviced only as a unit)	
57	914465	7	FITTING, lubricating, straight, 1/8"NPT	
58	603102	1	STRAP, torque, reduction gear housing	
59	035244	1	CAPSCREW, 3/8"NC x 3/4"	
	900817	1	WASHER, plain, U.S. std., 3/8"	
	904206	1	LOCKWASHER, 3/8"	
60	605800	2	STRAP, torque, worm gear housing	
61	012526	2	CAPSCREW, 3/4"NF x 3-1/4"	
	911045	2	NUT, 3/4"NF	
	904369	2	LOCKWASHER, 3/4"	
62	------	1	TRANSFER, check and lubrication guide (See PAINTING AND MARKING)	

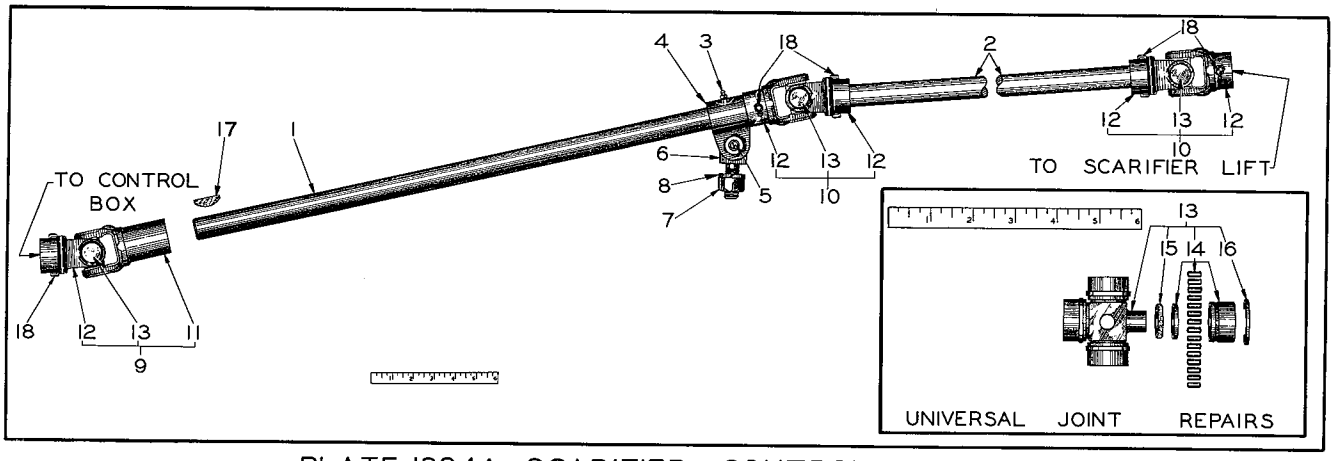

PLATE 1384A—SCARIFIER CONTROL SHAFTS

SCARIFIER CONTROL SHAFTS
(See Plate 1384A)

USAGE: Special Equipment, Applicable to Model AD3 and AD4 Grader.

ITEM	PART NUMBER	QTY.	DESCRIPTION	KIT NUMBER
1	605149	1	SHAFT, scarifier control - rear (27-1/4" long)	
2	605134	1	SHAFT, scarifier control - front (61-5/16" long)	
3	914465	1	FITTING, lubricating, straight, 1/8"NPT	
4	600970	1	BEARING, rear control shaft	
5	904541	1	CAPSCREW, 1/2"NC x 1-3/4"	
	911028	1	NUT, 1/2"NC	
	904208	1	LOCKWASHER, 1/2"	
6	602328	1	BOLT, eye, control shaft bearing	
7	911029	1	NUT, 5/8"NC	
8	904209	1	LOCKWASHER, 5/8"	
9	604551	1	JOINT ASSEMBLY, universal (Serviced only as a unit)(Used on scarifiers prior to #1G-562. Order JOINT ASSEMBLY 053123)	
	053123	1	JOINT ASSEMBLY, universal (Includes items 11, 12 and 13)(Used on scarifiers #1G-562 and up)	

(Continued)

SCARIFIER CONTROL SHAFTS (Cont'd)
(See Plate 1384A)

ITEM	PART NUMBER	QTY.	DESCRIPTION	KIT NUMBER
10	604550	2	JOINT ASSEMBLY, universal (Serviced only as a unit)(Used on scarifiers prior to #1G-459. Order JOINT ASSEMBLY 053121)	
	053121	2	JOINT ASSEMBLY, universal (Includes items 12 and 13)(Used on scarifiers #1G-562 and up)	
			NOTE: Items 11 thru 16 are repairs for universal JOINT ASSEMBLIES 053121 and 053123. These parts will not fit old style JOINT ASSEMBLIES 604550 and 604551, which must be replaced as complete units.	
11	053122	1	YOKE, universal joint (keywayed)	
12	053119	5	YOKE, universal joint (plain)	
13	053120	3	SPIDER KIT, universal joint (Each consists of 1 SPIDER, 4 WASHERS 055733, 4 BEARING ASSEMBLIES 053114 and 4 RINGS 053240)	
14	053114	12	BEARING ASSEMBLY, universal joint (Each consists of 1 CUP, 15 ROLLERS and 1 RETAINER)	
15	055733	12	WASHER, sealing, universal joint bearing (cork)	
16	053240	12	RING, snap, universal joint bearing	
17	911273	1	KEY, #127 woodruff, 1/4" x 2-1/8"	
18	601935	5	PIN, oontrol shaft universal joint (3/8" x 2")	
	900805	10	PIN, cotter, 1/8" x 3/4"	

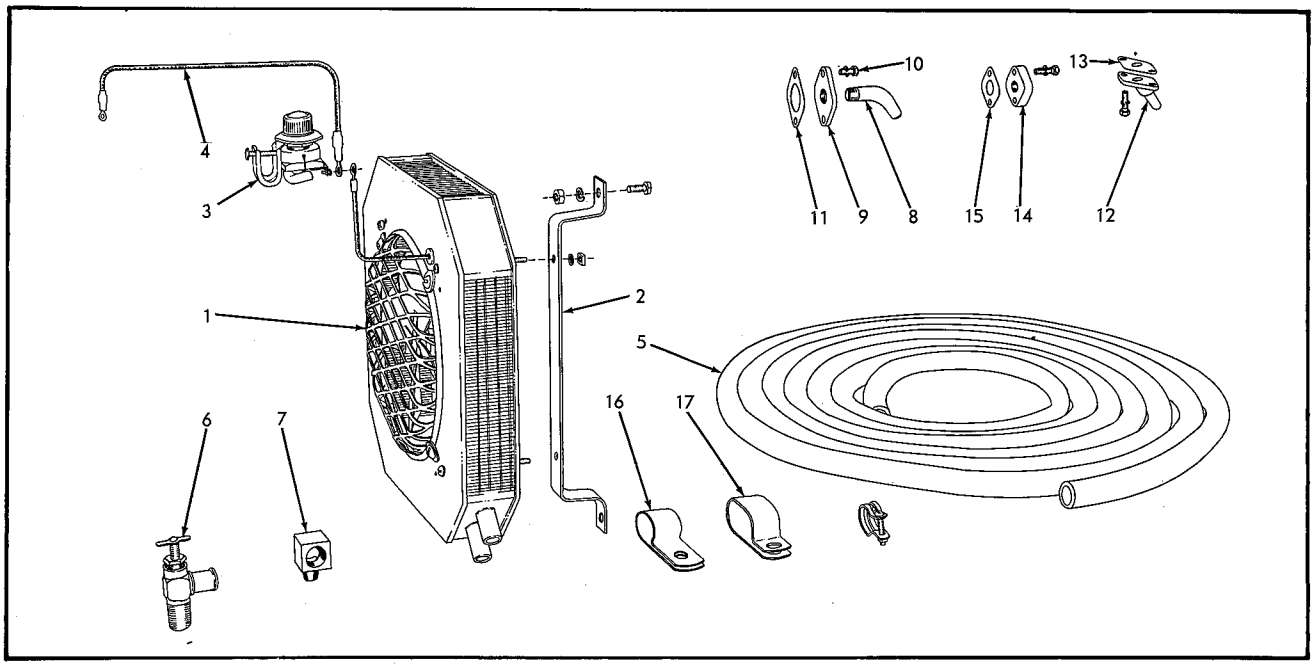

CAB HEATER

USAGE: Special Equipment

ITEM	PART NUMBER	QUANTITY AD3	QUANTITY AD4	DESCRIPTION	KIT NUMBER
1	605520	1	1	HEATER ASSEMBLY (Ha Dees Model FR-40-12V-M. Order repair parts from Burd Piston Ring Company, Rockford, Illinois)	
	901310	4	4	NUT, #10-24NC	
	906957	4	4	LOCKWASHER, internal teeth, #10	

(Continued)

ITEM	PART NUMBER	QUANTITY AD3	QUANTITY AD4	DESCRIPTION	KIT NUMBER
2	055673	2	2	BRACKET, heater mounting (Started at factory with grader #441)	
	903625	4	4	CAPSCREW, 1/4"NC x 3/4"	
	904204	4	4	NUT, 1/4"NC	
	911024	4	4	LOCKWASHER, 1/4"	
3	605521	1	1	SWITCH, rheostat type (Two-speed. Includes FUSE)	
4	605565	1	-	CABLE, switch to fuse block (16" long)(Graders prior to #441)	
	055992	1	1	CABLE, switch to fuse block (14" long)(Graders #441 and up)	
5	064504	2	2	HOSE, water (140" long)	
	911300	4	4	CLAMP, hose, 15/16" diam.	
6	605525	1	1	VALVE, water shut-off (angle type, 3/8"NPT)	
				NOTE: Items 7 thru 11 are applicable only to graders having engines prior to serial No. 371-29836 and 471-28611, on which the water by-pass tube connects to the oil cooler housing.	
7	055245	-	1	ELBOW, water shut-off valve (90°, 3/8"NPT male and female)	
8	605526	1	1	NIPPLE, hose connection at water manifold (3/8"NPT, 60° bend)	
9	605566	1	1	PLATE, hose connection (Replaces std. COVER 3222484 on water manifold)	
10	045312	2	2	CAPSCREW, 5/16"NC x 3/4"	
	904205	2	2	LOCKWASHER, 5/16"	
11	3222555	1	1	GASKET, hose connection plate	
				NOTE: Items 12 thru 15 are applicable only to graders having engines after serial No. 371-29835 and 471-28610, on which the water by-pass tube connects to the water pump.	
12	064526	1	1	ELBOW, hose connection at thermostat housing	
	903772	2	2	CAPSCREW, 5/16"NC x 1"	
	904205	2	2	LOCKWASHER, 5/16"	
13	064477	1	1	GASKET, hose connection at thermostat housing	
14	064439	1	1	PLATE, hose connection (Replaces std. COVER 5151305 on oil cooler housing)	
	903772	2	2	CAPSCREW, 5/16"NC x 1"	
	904205	2	2	LOCKWASHER, 5/16"	
15	064476	1	1	GASKET, hose connection plate	
16	605569	1	-	CLIP, hose supporting (single, closed type, 15/16" diameter, 15/32" bolt-hole)(Used on graders prior to #441)	
	041303	1	1	CLIP, hose supporting (single, closed type, 1" diameter, 13/32" bolt-hole)(Used on graders with late type water by-pass tube)	
	911115	1	1	WASHER, plain, SAE std., 3/8"	
17	605568	1	-	CLIP, hose supporting (double, closed type, for two 1" diameter lines, 9/16" bolt-hole)(Used on graders prior to #441)	
	605567	2	-	CLIP, hose supporting (double, closed type, for two 1" diameter lines, 5/16" bolt-hole)(Used on graders prior to #441)	
	055991	4	4	CLIP, hose supporting (double, closed type, for two 1" diameter lines, 17/32" bolt-hole)(First used at factory starting with grader #441)	
	903631	1	1	CAPSCREW, 3/8"NC x 1-1/4"	
	911026	1	1	NUT, 3/8"NC	
	911115	4	4	WASHER, plain, SAE std., 3/8"	

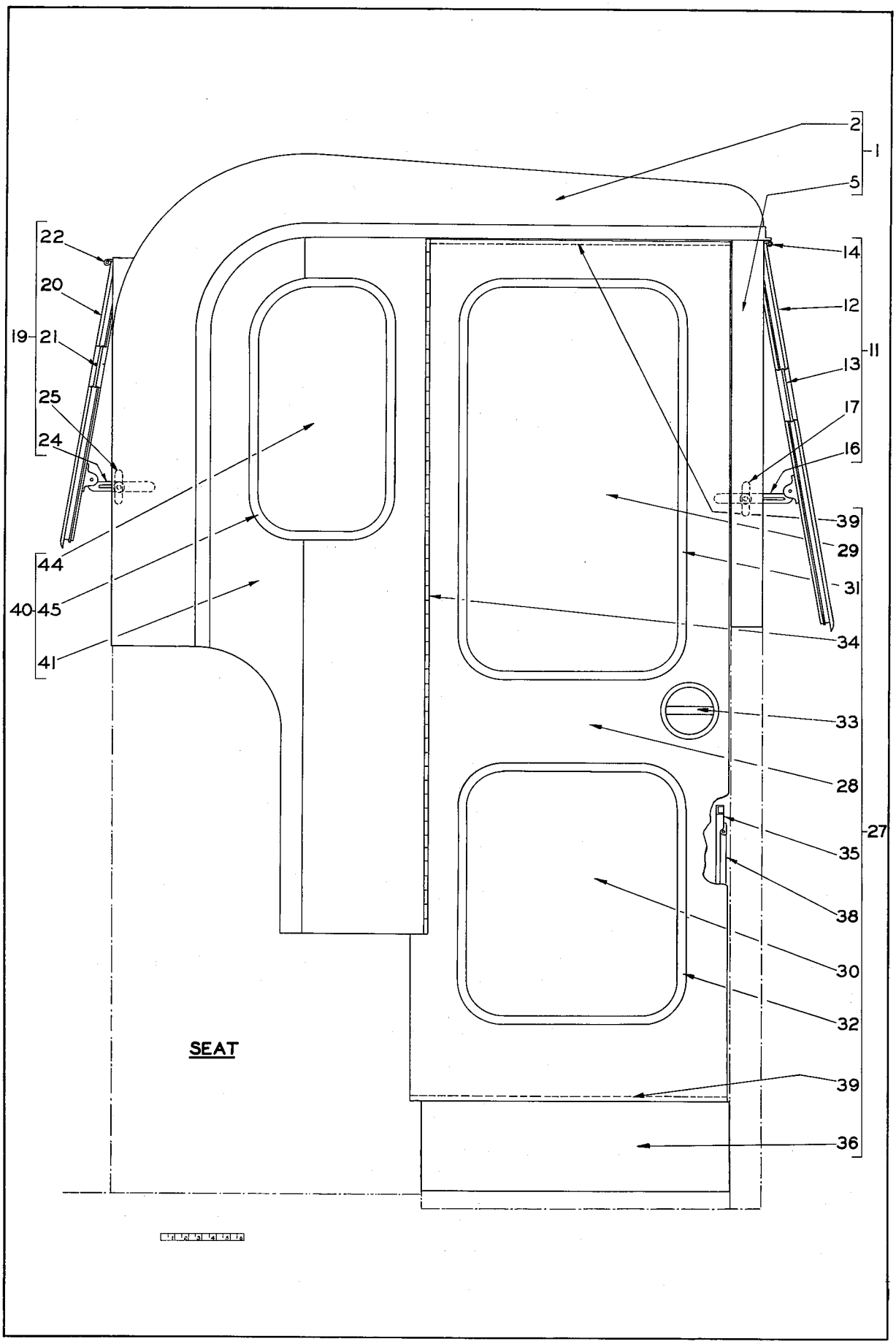

PLATE 1334A —— CANOPY AND ENCLOSURES (1ST TYPE)

CANOPY
(See Plate 1334A)

USAGE: Special Equipment. Used on Model AD3 Graders prior to serial No. 907 only.

ITEM	PART NUMBER	QTY.	DESCRIPTION	KIT NUMBER
2	605386	1	*CANOPY	
3	045312	7	CAPSCREW, 5/16"NC x 3/4" (To seat BACK)	
	045295	2	CAPSCREW, 5/16"NC x 1" (To seat BACK)	
	911025	9	NUT, 5/16"NC	
	904205	9	LOCKWASHER, 5/16"	
4	035439	8	CAPSCREW, 3/8"NC x 1"	
	904206	8	LOCKWASHER, 3/8"	
5	605355	1	*POST, front - right	
	605356	1	*POST, front - left	
6	035061	4	CAPSCREW, 1/2"NC x 1-1/4" (To FRAME)	
	904208	4	LOCKWASHER, 1/2"	

*Order from BARKOW COMPANY, 153 N. Milwaukee St. Milwaukee, Wisconsin.

CAB ENCLOSURES
(See Plate 1334A)

USAGE: Special Equipment. Used on Model AD3 Graders prior to serial No. 907 only.

11	605280	1	*WINDSHIELD GROUP - front (Consists of items 12 thru 18)	
12	------	1	FRAME, front windshield (Not serviced. Order item 11)	
13	605381	1	*GLASS, front windshield	
14	605379	1	*HINGE, front windshield	
15	------	10	*SCREW, sheet metal, oval head, #7 x 1/2"	
16	605360	1	*ARM, windshield adjusting - right	
	605361	1	*ARM, windshield adjusting - left	
17	605359	2	*THUMBSCREW ASSEMBLY (1 SCREW, 1 ANCHOR, 1 STUD)	
18	901165	4	WASHER, plain, U.S. std., 5/16"	
19	605281	1	*WINDSHIELD GROUP - rear (Consists of items 20 thru 26)	
20	------	1	FRAME, rear windshield (Not serviced. Order item 19)	
21	605382	1	*GLASS, rear windshield	
22	605380	1	*HINGE, rear windshield	
23	------	12	*SCREW, sheet metal, oval head, #7 x 1/2"	
24	605360	1	*ARM, windshield adjusting - right	
	605361	1	*ARM, windshield adjusting - left	
25	605359	2	*THUMBSCREW ASSEMBLY (1 SCREW, 1 ANCHOR, 1 STUD)	
26	901165	4	WASHER, plain, U.S. std., 5/16"	
27	605282	1	*DOOR GROUP - right (Consists of items 28 thru 39)	
	605283	1	*DOOR GROUP - left (Consists of items 28 thru 39)	
28	------	2	FRAME, door (Not serviced. Order item 27)	
29	605383	2	*GLASS, door - upper	
30	605384	2	*GLASS, door - lower	

(Continued)

CAB ENCLOSURES (Cont'd)

ITEM	PART NUMBER	QTY.	DESCRIPTION	KIT NUMBER
31	605366	2	*RUBBER, door - upper glass	
32	605376	2	*RUBBER, door - lower glass	
33	605369	1	*LOCK ASSEMBLY, right door (Serviced only as a unit)	
	605370	1	*LOCK ASSEMBLY, left door (Serviced only as a unit)	
34	605371	1	*HINGE, right door	
	605372	1	*HINGE, left door	
35	605373	1	*JAM AND STRIKER, right door	
	605374	1	*JAM AND STRIKER, left door	
36	605377	1	*PLATE, closure, right door	
	605378	1	*PLATE, closure, left door	
37	------	8	*SCREW, thread-cutting, hex-hd., 3/8" x 3/4"	
38	605367	2	*RUBBER, door sealing - side	
39	605375	4	*RUBBER, door sealing - upper and lower	
40	605284	1	*PANEL GROUP, side - right (Consists of items 41 thru 45)	
	605285	1	*PANEL GROUP, side - left (Consists of items 41 thru 45)	
41	------	2	FRAME, side panel (Not serviced. Order item 40)	
42	035439	6	CAPSCREW, 3/8"NC x 1"	To CANOPY
	904206	6	LOCKWASHER, 3/8"	
43	045295	8	CAPSCREW, 5/16"NC x 1"	To SEAT BACK
	911025	8	NUT, 5/16"NC	
	904205	8	LOCKWASHER, 5/16"	
44	605385	2	*GLASS, side panel	
45	605368	2	*RUBBER, side panel glass	

*Order from BARKOW COMPANY, 153 N. Milwaukee St., Milwaukee, Wisconsin.

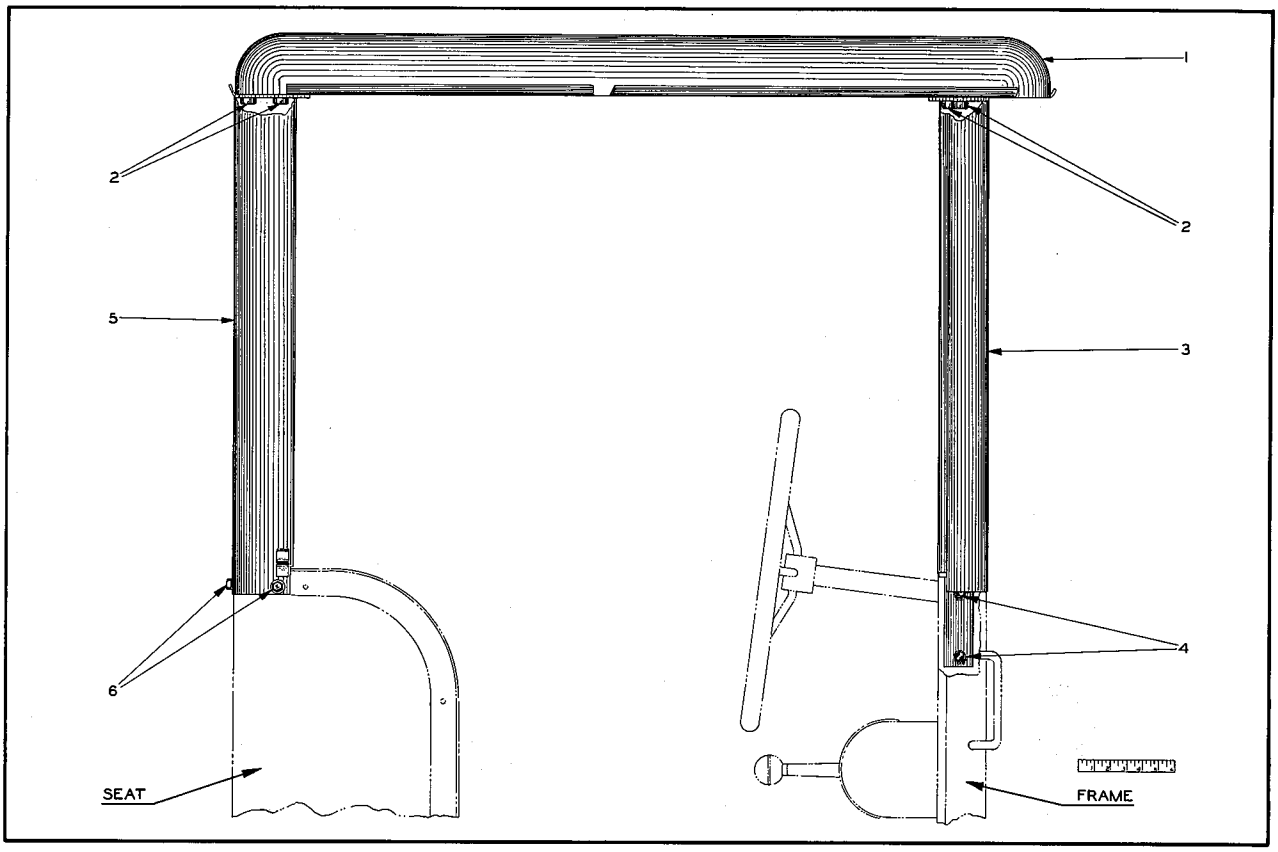

PLATE 1727—CANOPY (2ND TYPE)

CANOPY
(See Plate 1727)

USAGE: Special Equipment. Applicable to Model AD3 and AD4 Graders.
First used at factory starting with grader serial No. 907.

ITEM	PART NUMBER	QTY.	DESCRIPTION	KIT NUMBER
1	057043	1	TOP, canopy	
2	070467	8	CAPSCREW, 1/2"NF x 1"	
	904208	8	LOCKWASHER, 1/2"	
	911043	8	NUT, 1/2"NF	
3	057071	1	CHANNEL, front - left	
	057072	1	CHANNEL, front - right	
4	070467	4	CAPSCREW, 1/2"NF x 1"	
	910244	4	WASHER, plain, SAE std., 1/2"	
5	057059	1	CHANNEL, rear - left	
	057060	1	CHANNEL, rear - right	
6	036032	4	CAPSCREW, 3/8"NF x 3/4"	
	904206	4	LOCKWASHER, 3/8"	
	911041	4	NUT, 3/8"NF	
	911115	4	WASHER, plain, SAE std., 3/8"	

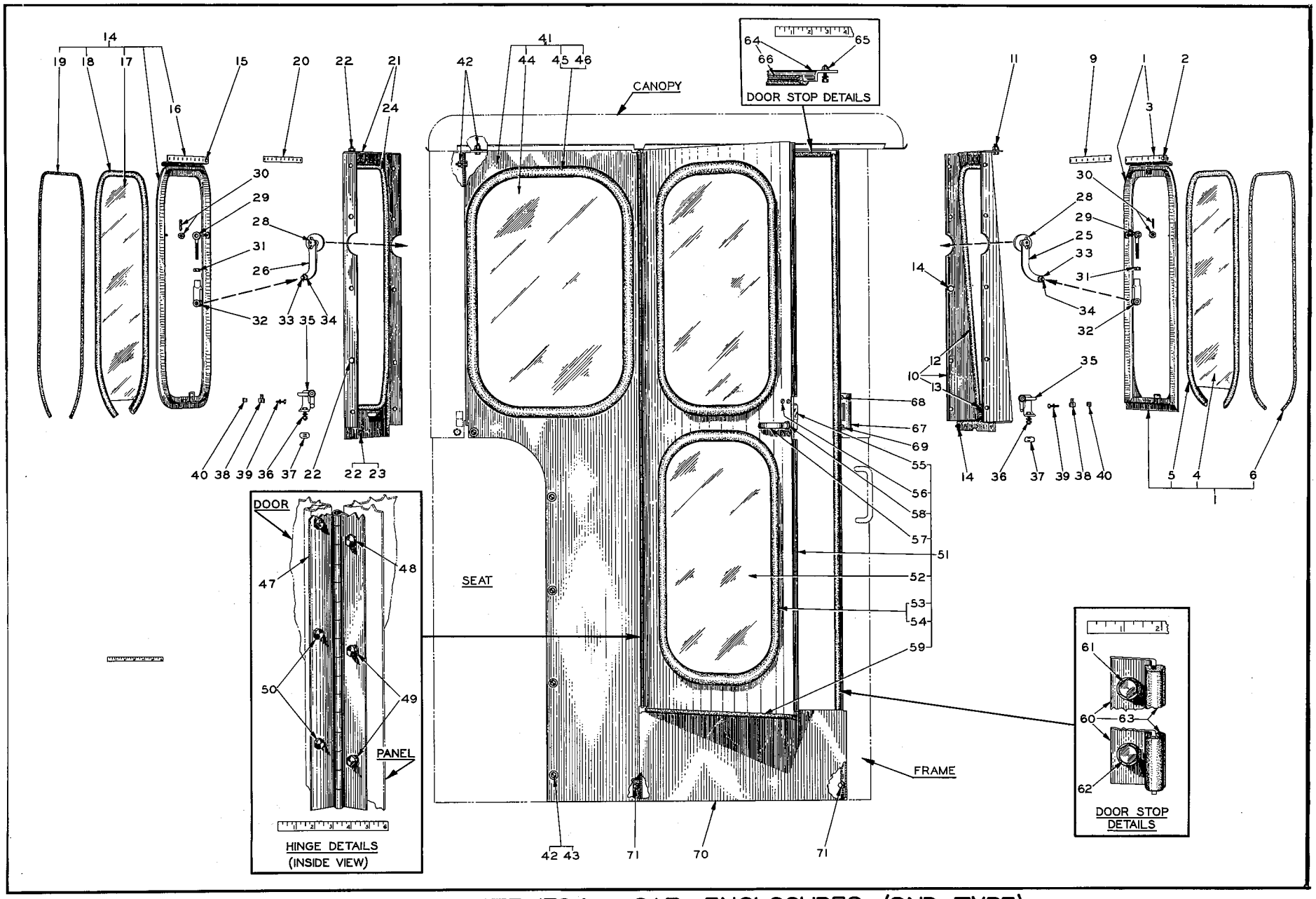

PLATE 1724—CAB ENCLOSURES (2ND TYPE)

CAB ENCLOSURES

(See Plate 1724)

USAGE: Special Equipment. Applicable only to graders equipped with CANOPY TOP 057043. First used at factory starting with grader serial No. 907.

ITEM	PART NUMBER	QTY.	DESCRIPTION	KIT NUMBER
1	064502	1	WINDSHIELD ASSEMBLY front (Includes items 3 thru 6)	
2	912789	8	CAPSCREW, 1/4"NF x 3/4"	
	911040	8	NUT, 1/4"NF	
	904204	8	LOCKWASHER, 1/4"	
	911114	8	WASHER, plain, SAE std., 1/4"	
3	057123	1	HINGE, front windshield (female part only)	
4	------	1	GLASS, front windshield (Has 2 round corners and 2 square corners) (Used on graders Nos. 907, 908, 915, 916, 922, 923, 924, 930, and 956 only)	
	057119	1	GLASS, front windshield (32-1/4" long. Has 4 round corners)(First used on grader #931 but later superseded by GLASS 064491)	
	064491	1	GLASS, front windshield (31-3/4" long)(Used after August 1, 1948)	
5	057135	1	SEAL, front windshield glass (rubber, 130-1/2" long)(For use with square-corner windshield only. Non-current)	
	057120	1	SEAL, front windshield glass (rubber, 106-1/2" long)(Used with round-corner windshield. First used on grader #931)	
6	057136	1	STRIP, expanding, front windshield glass seal (rubber, 130-1/2" long)(For use with square-corner windshield only. Non-current)	
	057121	1	STRIP, expanding, front windshield glass seal (rubber, 106-1/2" long)(Used with round-corner windshield. First used on grader #931)	
9	057176	6	SHIM, spacing, front windshield hinge (Use as required)	
10	057164	1	PANEL ASSEMBLY, front windshield (Has 34-1/2" windshield opening. Includes items 12 and 13)(Used prior to August 1948)	
	064500	1	PANEL ASSEMBLY, front windshield (Has 34" windshield opening. Includes items 12 and 13)(Used after August 1, 1948)	
11	036034	23	CAPSCREW, 3/8"NF x 1"	
	911041	23	NUT, 3/8"NF	
	904206	23	LOCKWASHER, 3/8"	
12	057171	1	SEAL, front windshield panel - upper (rubber, 83-5/8" long)	
13	058122	1	SEAL, front windshield panel - lower (rubber, 35-5/8" long)	
14	057127	1	WINDSHIELD ASSEMBLY - rear (46-3/4" wide. Includes items 16 thru 19)(Used prior to August 1948)	
	064519	1	WINDSHIELD ASSEMBLY - rear (46-1/4" wide. Includes items 16 thru 19)	
15	912789	10	CAPSCREW, 1/4"NF x 3/4"	
	911040	10	NUT, 1/4"NF	
	904204	10	LOCKWASHER, 1/4"	
	911114	10	WASHER, plain, SAE std., 1/4"	
16	057129	1	HINGE, rear windshield (female part only)	
17	057137	1	GLASS, rear windshield (43-1/2" long)(Used prior to August 1948)	
	064510	1	GLASS, rear windshield (43" long)(Used after August 1, 1948)	
18	057135	1	SEAL, rear windshield glass (rubber, 130-1/2" long)	
19	057136	1	STRIP, expanding, rear windshield glass seal (rubber, 130-1/2" long)	
20	057175	6	SHIM, spacing, rear windshield hinge (Use as required)	

(Continued)

ITEM	PART NUMBER	QTY.	DESCRIPTION	KIT NUMBER
21	057157	1	PANEL ASSEMBLY, rear windshield (Has 46-1/8" windshield opening. Includes item 24)(Used prior to August 1948)	
	064517	1	PANEL ASSEMBLY, rear windshield (Has 45-5/8" windshield opening. Includes item 24)(Used after August, 1948)	
22	036034	22	CAPSCREW, 3/8"NF x 1"	
	911041	22	NUT, 3/8"NF	
	904206	22	LOCKWASHER, 3/8"	
23	911115	5	WASHER, plain, SAE std., 3/8"	
24	057162	1	SEAL, rear windshield panel (rubber, 136" long)	
25	057151	1	ARM, adjusting, front windshield - left	
	057152	1	ARM, adjusting, front windshield - right	
26	057149	1	ARM, adjusting, rear windshield - left	
	057150	1	ARM, adjusting, rear windshield - right	
28	058263	4	WINGSCREW, adjusting arm	
29	057148	4	BOLT, eye, windshield adjusting	
30	911053	4	NUT, castle, 3/8"NF	
	900801	4	PIN, cotter, 3/32" x 3/4"	
31	911041	4	NUT, hex, 3/8"NF	
32	033056	4	YOKE, windshield adjusting	
33	011258	4	CAPSCREW, windshield adjusting arm (hex head, drilled end, 3/8" NF x 1-1/4")	
34	910863	4	NUT, slotted, 3/8"NF	
	900801	4	PIN, cotter, 3/32" x 3/4"	
35	057138	2	LATCH ASSEMBLY, front and rear windshield (Each consists of 1 LEVER, 2 PINS, 1 CLEVIS and 1 BRACKET. Serviced only as a unit)	
36	036034	4	CAPSCREW, 3/8"NF x 1"	
	911041	4	NUT, 3/8"NF	
	904206	4	LOCKWASHER, 3/8"	
37	057145	10	SHIM, latch adjusting (Use as required)	
38	057144	2	HOOK, windshield latch	
39	914106	4	CAPSCREW, 1/4"NF x 7/8"	
	904204	4	LOCKWASHER, 1/4"	
40	057146	10	SHIM, hook adjusting (Use as required)	
41	057109	1	PANEL ASSEMBLY, side - left (Includes items 44 thru 46)	
	057110	1	PANEL ASSEMBLY, side - right (Includes items 44 thru 46)	
42	036034	28	CAPSCREW, 3/8"NF x 1"	
	911041	28	NUT, 3/8"NF	
	904206	28	LOCKWASHER, 3/8"	
43	911115	5	WASHER, plain, SAE std., 3/8"	
44	057083	2	GLASS, side panel	
45	057084	2	SEAL, side panel glass (rubber, 78" long)	
46	057085	2	STRIP, expanding, side panel glass seal (rubber, 78" long)	
47	057495	1	HINGE, left door	
	057496	1	HINGE, right door	
48	911101	16	CAPSCREW, 1/4"NF x 1/2"	
	911040	16	NUT, 1/4"NF	
	904204	16	LOCKWASHER, 1/4"	
49	912789	4	CAPSCREW, 1/4"NF x 3/4"	
	904204	4	LOCKWASHER, 1/4"	
50	911101	20	CAPSCREW, 1/4"NF x 1/2"	

(Continued)

ITEM	PART NUMBER	QTY.	DESCRIPTION	KIT NUMBER
51	057079	1	DOOR ASSEMBLY - left (Includes items 52 thru 59)	
	057080	1	DOOR ASSEMBLY - right (Includes items 52 thru 59)	
52	057083	4	GLASS, door	
53	057084	4	SEAL, door glass (rubber, 78" long)	
54	057085	4	STRIP, expanding, door glass seal (rubber, 78" long)	
55	058265	1	LOCK, door - left (Includes inner handle)	
	058266	1	LOCK, door - right (Includes inner handle)	
56	900553	8	SCREW, machine, #8-32NC x 1/2"	
	907154	8	NUT, hex, #8-32NC	
	906964	8	LOCKWASHER, #8	
57	057097	2	HANDLE, door - outer	
	900552	2	SCREW, machine, #8-32NC x 3/8"	
	910243	2	WASHER, plain, SAE std., #10	
58	057101	2	WASHER, spacing, door handle	
59	057095	2	SEAL, door - bottom (rubber, 21-3/4" long)	
60	057103	2	ANGLE ASSEMBLY, door stop - front (Includes item 63)	
61	912789	10	CAPSCREW, 1/4"NF x 3/4"	
	911040	10	NUT, 1/4"NF	
	911114	10	WASHER, plain, SAE std., 1/4"	
	904204	10	LOCKWASHER, 1/4"	
62	905655	12	CAPSCREW, 1/4"NC x 1/2"	
	911114	12	WASHER, plain, SAE std., 1/4"	
63	057105	2	SEAL, front door stop angle (rubber, 59-7/8")	
64	057106	2	ANGLE ASSEMBLY, door stop - top (21-3/8" long. Includes item 66)(Used prior to April 1949)	
	065563	1	ANGLE ASSEMBLY, left door stop - top (22-5/8" long. Includes item 66)(Used after April 1, 1949)	
	065564	1	ANGLE ASSEMBLY, right door stop - top (22-5/8" long. Includes item 66)(Used after April 1, 1949)	
65	912789	12	CAPSCREW, 1/4"NF x 3/4"	
	911040	12	NUT, 1/4"NF	
	911114	12	WASHER, plain, SAE std., 1/4"	
	904204	12	LOCKWASHER, 1/4"	
66	065560	2	SEAL, top door stop angle (rubber, 21-3/4" long)	
67	058264	2	STRIKER, door lock	
68	910271	2	SCREW, machine, flat head, 1/4"NC x 3/4"	
	911024	2	NUT, 1/4"NC	
	904204	2	LOCKWASHER, 1/4"	
69	910271	2	SCREW, machine, flat head, 1/4"NC x 3/4"	
70	057115	1	PANEL, door bottom - left	
	057116	1	PANEL, door bottom - right	
71	035439	8	CAPSCREW, 3/8"NC x 1"	
	911115	8	WASHER, plain, SAE std., 3/8"	
72	033288	-	CEMENT, neoprene (1/2 pint can)(For attaching rubber seals)	
73	054890	-	SOLVENT, neoprene cement (1/2 pint can)	

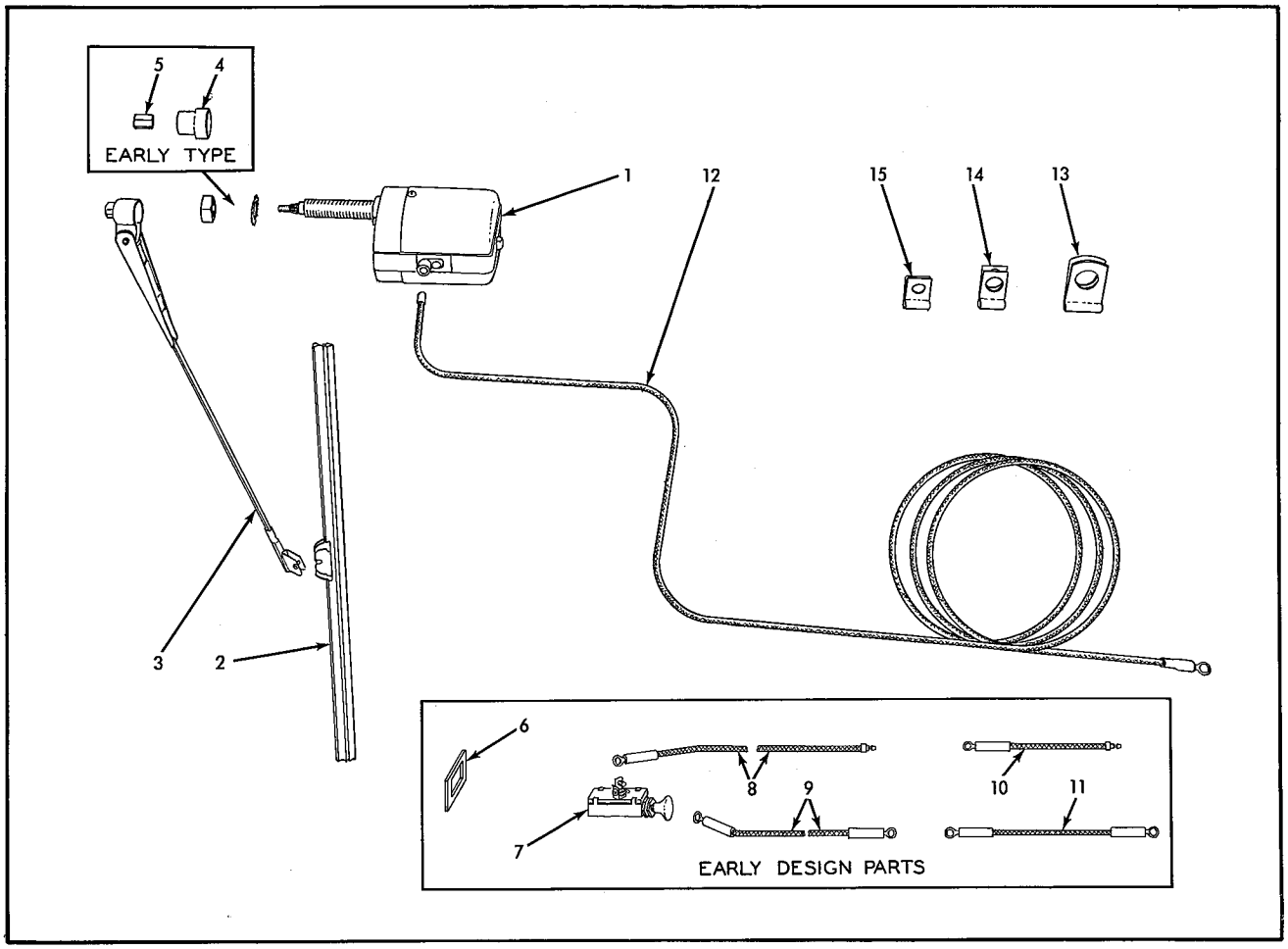

WINDSHIELD WIPER

USAGE: Special Equipment

ITEM	PART NUMBER	QUANTITY AD3	QUANTITY AD4	DESCRIPTION	KIT NUMBER
1	055414	1	1	MOTOR, windshield wiper (American Bosch Model WWA-12C-215. Has built-in SWITCH)(When replacing earlier Model WWA-12-144 MOTOR which used separate SWITCH, also order 1 CABLE 055415 and 1 CLIP 033044. Order repair parts from nearest authorized service station)	
	910876	1	1	NUT, jam, 7/16"NF	
	914666	1	1	LOCKWASHER, external teeth, 7/16"	
2	065035	1	1	BLADE, wiping	
3	065036	1	1	ARM, wiping blade (Non-adjustable. When required for replacement of the adjustable type arm used on early units, new BLADE 065035 must be furnished also)	
				NOTE: Items 4 and 5 were used only with the adjustable type wiping blade arm as furnished on graders built prior to September 1948.	
4	056126	1	1	ADAPTER, wiping blade arm	
5	056125	1	1	NUT, retaining, wiping blade arm	
6	605448	1	-	PLATE, spacing, motor mounting (Used with BARKOW cab on early units only)	
				NOTE: Items 7 thru 11 were used only with the old type wiper motor which required a separate switch.	

(Continued)

WINDSHIELD WIPER (Cont'd)

ITEM	PART NUMBER	QUANTITY AD3	QUANTITY AD4	DESCRIPTION	KIT NUMBER
7	605411	1	-	SWITCH, push - pull	
8	605454	1	-	CABLE, motor to switch (75" long)	
9	605412	1	-	CABLE, switch to fuse block (22" long)	
10	605455	1	-	CABLE, motor to ground (4-1/2" long)(Used with BARKOW cab)	
11	055903	1	-	CABLE, motor to ground (6" long)(Used with A-C cab)	
12	059184	1	1	CABLE, motor to fuse block (86" long)(Use with late type wiper motor only)	
13	AM-9622	1	1	CLIP, cable supporting (3/16" diam., 17/32" bolt-hole)	
14	U-479	3	3	CLIP, cable supporting (3/16" diam., 13/32" bolt-hole)	
15	AM-8763	1	1	CLIP, cable supporting (3/16" diam., 9/32" bolt-hole)	

DEFROSTER FAN
(Not Illustrated)

USAGE: Special Equipment

ITEM	PART NUMBER	QTY.	DESCRIPTION	KIT NUMBER
1	605597	1	FAN ASSEMBLY (Includes MOTOR, FAN, GUARD, PEDASTAL, SWITCH and WIRING)(HaDees No. 81-14. Order repair parts from Burd Piston Ring Co., Rockford, Illinois)	
2	910160	4	SCREW, thread-cutting, rd. hd., #10 x 1/2"	
3	U-479	2	CLIP, fan cable (single, closed type, 3/16" diam., 13/32" bolt-hole)	
4	AM-9622	1	CLIP, fan cable (single, closed type, 3/16" diam., 17/32" bolt-hole)	

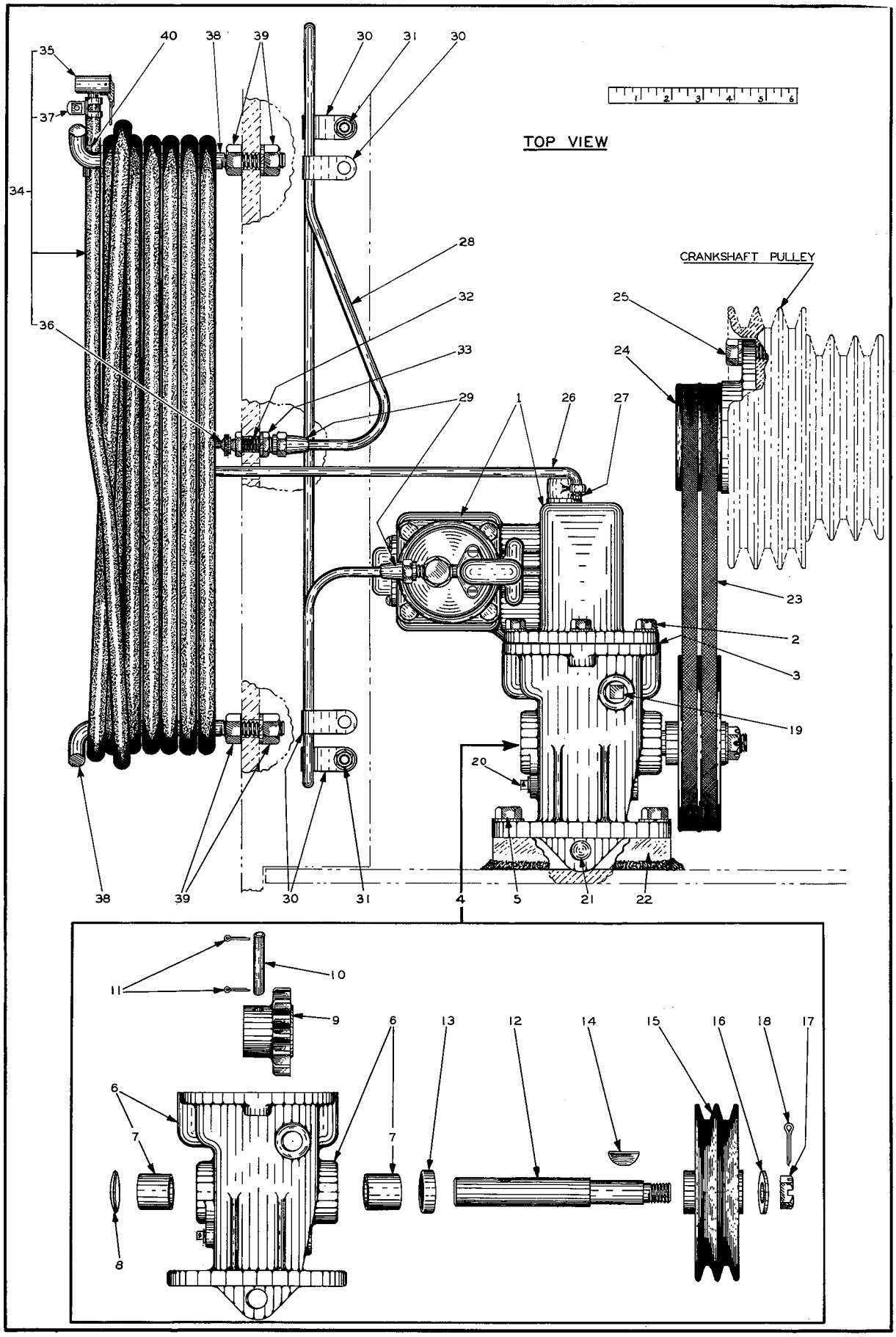

PLATE 1757A— TIRE PUMP

TIRE PUMP
(See Plate 1757A)

USAGE: Special Equipment. Applicable to Model AD3 Graders only.

ITEM	PART NUMBER	QTY.	DESCRIPTION (Saylor-Beall #1218-FD)	KIT NUMBER
1	057487	1	PUMP ASSEMBLY, air (Order repair parts from Saylor-Beall Mfg. Co 401 Kirbie St., St. Johns, Mich.)	
2	903631	6	CAPSCREW, 3/8"NC x 1-1/4"	
	904206	6	LOCKWASHER, 3/8"	
3	057506	1	GASKET, pump to adapter	
4	057399	1	ADAPTER ASSEMBLY, air pump (Includes items 6 thru 18)	
5	903638	4	CAPSCREW, 1/2"NC x 1-1/4"	
	910244	4	WASHER, plain, SAE std., 1/2"	
6	057322	1	HOUSING ASSEMBLY, air pump adapter (Includes item 7)	
7	057329	2	BEARING, adapter housing (bronze)	
8	910007	1	PLUG, expansion, 1-3/8" diam.	
9	058436	1	GEAR, air pump adapter	
10	057426	1	PIN, straight	
11	900942	2	PIN, cotter, 3/32" x 5/8"	
12	057398	1	SHAFT, air pump adapter	
13	052641	1	SEAL, oil, air pump adapter shaft	
14	036997	1	KEY, driven pulley	
15	057397	1	PULLEY, driven	
16	911100	1	WASHER, plain, SAE std., 5/8"	
17	913470	1	NUT, jam, slotted, 5/8"NF	
18	900806	1	PIN, cotter, 1/8" x 1"	
19	901653	2	PLUG, pipe, 3/8"NPT	
20	901651	1	PLUG, pipe, 1/8"NPT	
21	900668	1	SETSCREW, square head, oval point, 5/8"NC x 3"	
	911036	1	NUT, jam, 5/8"NC	
22	------	1	PLATE, adapter mounting (Not serviced. Welded to FRAME)	
23	057499	2	BELT, driving (V-type, 17/32" wide x 39" long)	
24	057380	1	PULLEY, driving	
25	903638	4	CAPSCREW, 1/2"NC x 1-1/4"	
	904208	4	LOCKWASHER, 1/2"	
26	058445	1	ROD, air pump control	
27	904001	1	PIN, cotter, 3/32" x 1"	
28	058448	1	TUBE ASSEMBLY, air pump (Includes item 29)	
29	910137	2	NUT, flared, long, 5/16" tube	
30	206641	4	CLIP, air pump tube (single, closed type, 5/16" diam., 13/32" bolt hole)	
31	903631	2	CAPSCREW, 3/8"NC x 1-1/4"	
	911026	2	NUT, 3/8"NC	
	904206	2	LOCKWASHER, 3/8"	
32	058442	1	CONNECTOR, air pump tube	
33	913830	1	NUT, jam, 1/2"NF	
	904208	1	LOCKWASHER, 1/2"	
34	058438	1	HOSE ASSEMBLY, tire inflating (30 ft. long)(Includes items 35 thru 37)	
35	058441	1	THUMB-LOCK, tire inflating hose	
36	058440	1	CONNECTION, ball joint, tire inflating hose	
37	058439	2	CLAMP, tire inflating hose connections	
38	058444	2	ROD, air hose supporting	
39	911028	4	NUT, 1/2"NC	
	904208	2	LOCKWASHER, 1/2"	
40	058443	1	CLIP, supporting, air hose end	
41	------	1	TRANSFER, instruction (See PAINTING AND MARKING)	

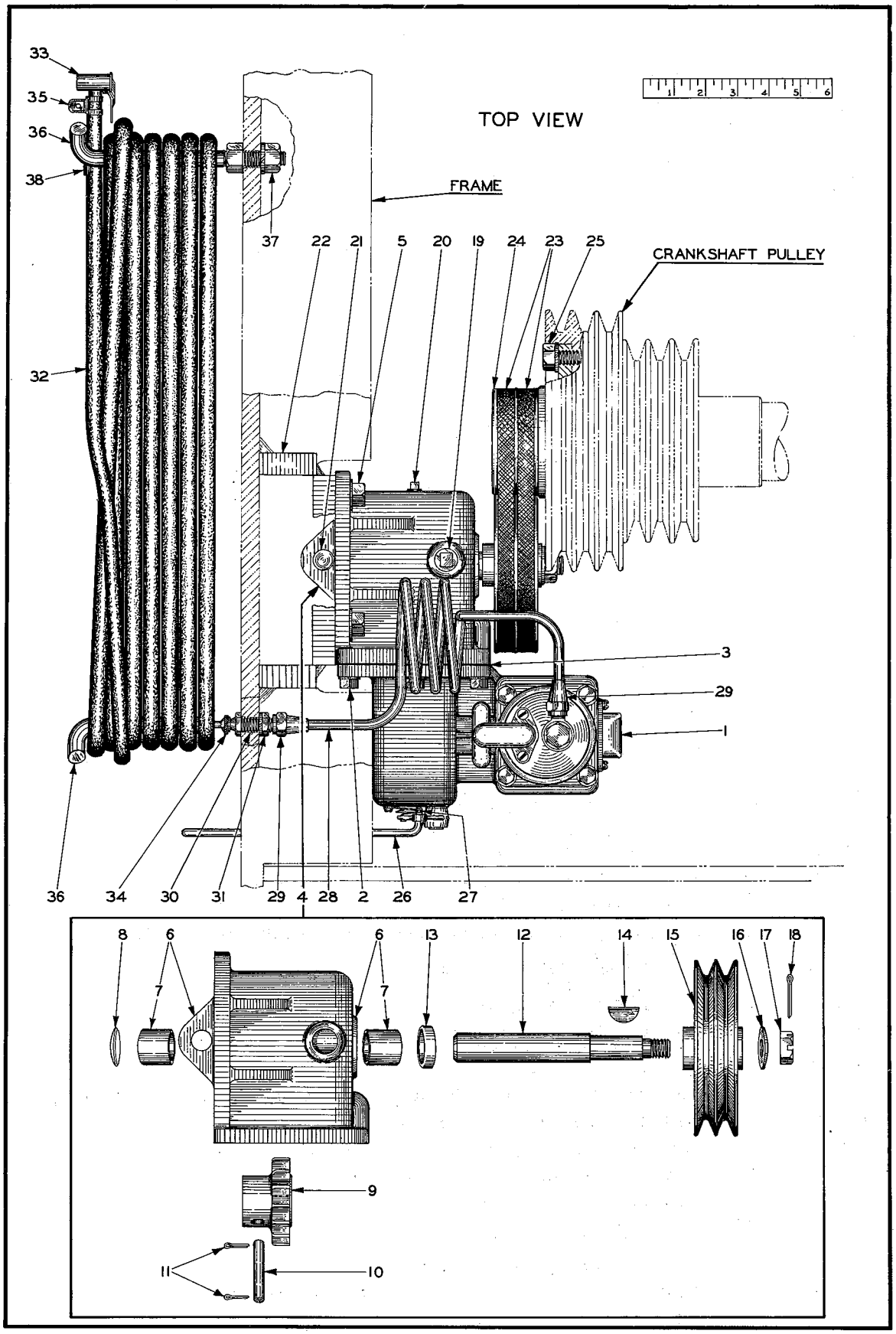

PLATE 1977——TIRE PUMP

TIRE PUMP
(See Plate 1977)

USAGE: Special Equipment. Applicable to Model AD4 Graders only.

ITEM	PART NUMBER	QTY.	DESCRIPTION	KIT NUMBER
			(Saylor-Beall #1218-FD)	
1	057487	1	PUMP ASSEMBLY, air (Order repair parts from Saylor-Beall Mfg. Co. 401 Kirbie St., St. Johns, Mich.)	
2	903630	6	CAPSCREW, 3/8"NC x 1"	
	904206	6	LOCKWASHER, 3/8"	
3	057506	1	GASKET, pump to adapter	
4	066444	1	ADAPTER ASSEMBLY, air pump (Includes items 6 thru 18)	
5	903639	4	CAPSCREW, 1/2"NC x 1-1/2"	
	910244	4	WASHER, plain, SAE std., 1/2"	
6	066442	1	HOUSING ASSEMBLY, air pump adapter (Includes item 7)	
7	057329	2	BEARING, adapter housing (bronze)	
8	910007	1	PLUG, expansion, 1-3/8" diam.	
9	058436	1	GEAR, air pump adapter	
10	057426	1	PIN, straight	
11	900942	2	PIN, cotter, 3/32" x 5/8"	
12	066443	1	SHAFT, air pump adapter	
13	052641	1	SEAL, oil, air pump adapter shaft	
14	036997	1	KEY, driven pulley	
15	057397	1	PULLEY, driven	
16	911100	1	WASHER, plain, SAE std., 5/8"	
17	913470	1	NUT, jam, slotted, 5/8"NF	
18	900806	1	PIN, cotter, 1/8" x 1"	
19	901653	2	PLUG, pipe, 3/8"NPT	
20	901651	1	PLUG, pipe, 1/8"NPT	
21	900668	1	SETSCREW, sq-hd., oval point, 5/8"NC x 3"	
	911036	1	NUT, jam, 5/8"NC	
22	------	1	PLATE, adapter mounting (Not serviced. Welded to FRAME)	
23	066580	2	BELT, driving (V-type, 1/2" wide x 32" long)	
24	057380	1	PULLEY, driving	
25	903638	4	CAPSCREW, 1/2"NC x 1-1/4"	
	904208	4	LOCKWASHER, 1/2"	
26	066435	1	ROD, air pump control	
27	904001	1	PIN, cotter, 3/32" x 1"	
28	066437	1	TUBE ASSEMBLY, air pump (Includes item 29)	
29	910137	2	NUT, flared, long, 5/16" tube	
30	058442	1	CONNECTOR, air pump tube	
31	913830	1	NUT, jam, 1/2"NF	
	904208	1	LOCKWASHER, 1/2"	
32	058438	1	HOSE ASSEMBLY, tire inflating (30 ft. long)(Includes items 33 thru 35)	
33	058441	1	THUMB-LOCK, tire inflating hose	
34	058440	1	CONNECTION, ball joint, tire inflating hose	
35	058439	2	CLAMP, tire inflating hose connections	
36	058444	2	ROD, air hose supporting	
37	911028	4	NUT, 1/2"NC	
	904208	2	LOCKWASHER, 1/2"	
38	058443	1	CLIP, supporting, air hose end	
39	------	1	TRANSFER, instruction (See PAINTING AND MARKING)	

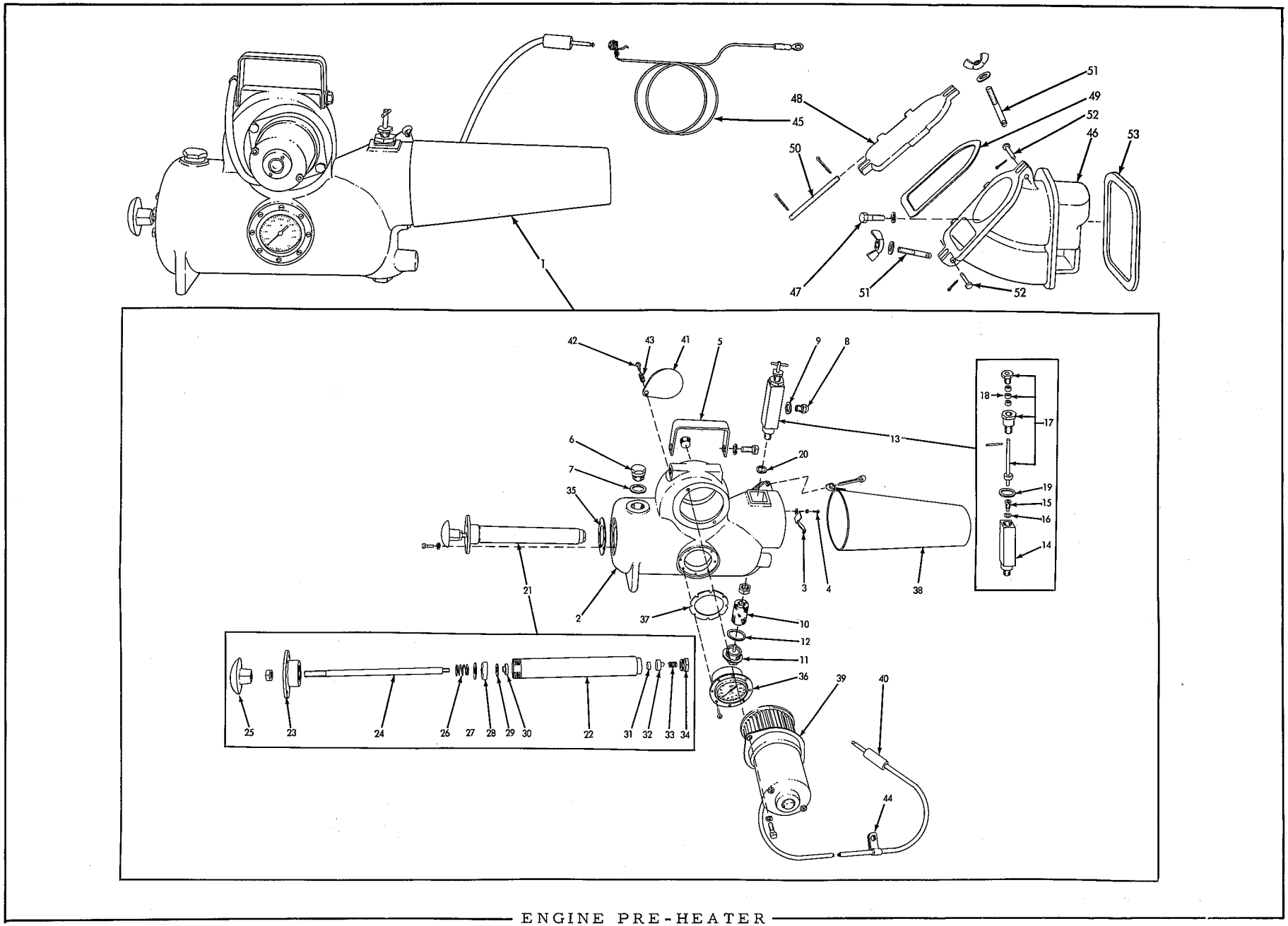

ENGINE PRE-HEATER

ENGINE PRE-HEATER

USAGE: Special Equipment

ITEM	PART NUMBER	QTY.	DESCRIPTION	KIT NUMBER
1	047747	1	PRE-HEATER ASSEMBLY (Consists of items 2 thru 44)	
2	042713	1	CASE, main	
	904223	1	PLUG, pipe, ctsk-hd., 1/2"NPT	
3	042715	1	BLADE, air deflecting	
4	034076	2	SCREW, thread-cutting, cross-recessed-hd., #8 x 1/2"	
	906964	2	LOCKWASHER, #8	
5	042730	1	HANDLE, carrying	
	903628	2	CAPSCREW, 3/8"NC x 5/8"	
	904206	2	LOCKWASHER, 3/8"	
6	042752	1	PLUG, filling hole	
7	042751	1	GASKET, filling hole plug	
8	042738	1	NOZZLE, spray	
9	5151921	1	WASHER, spray nozzle	
10	042743	1	FILTER, fuel	
11	042739	1	PLUG, filter access hole	
12	042744	1	GASKET, filter access hole plug	
13	047734	1	VALVE ASSEMBLY, fuel shut-off (Includes items 14 thru 19)	
	913830	1	NUT, jam, 1/2"NF	
14	047735	1	BODY, fuel shut-off valve	
15	223914	1	VALVE ASSEMBLY, fuel (Consists of 1 NEEDLE, 1 SEAT and 1 GASKET 224151)	
16	224151	1	GASKET, fuel valve	
17	047738	1	STEM ASSEMBLY, fuel shut-off valve (Serviced only as a unit. Includes item 18)	
18	048734	3	RING, packing, fuel shut-off valve	
19	047744	1	GASKET, fuel shut-off valve	
20	5151921	1	WASHER, fuel shut-off valve body	
21	042716	1	PUMP ASSEMBLY, air (Consists of items 22 thru 34)	
	905656	6	CAPSCREW, 1/4"NC x 5/8"	
	904204	6	LOCKWASHER, 1/4"	
22	042718	1	TUBE, air pump	
23	042717	1	NUT, air pump tube	
24	042721	1	SHAFT, air pump	
	911041	1	NUT, 3/8"NF	
25	049659	1	KNOB, air pump	
26	016702	1	SPRING, air pump shaft	
27	042722	1	WASHER, outer, air pump leather	
28	042723	1	LEATHER, air pump	
29	042724	1	WASHER, inner, air pump leather	
30	042725	1	NUT, air pump shaft	
31	042726	1	GASKET, air pump valve	

(Continued)

ITEM	PART NUMBER	QTY.	DESCRIPTION	KIT NUMBER
32	042727	1	VALVE, air pump	
33	031580	1	SPRING, air pump valve	
34	042728	1	NUT, air pump valve	
35	042729	1	GASKET, air pump to case	
36	042745	1	GAUGE, air pressure	
	903748	8	SCREW, machine, fil-hd., #6NC x 3/8"	
37	042753	1	GASKET, air pressure gauge	
38	042747	1	TUBE, extension	
	901344	1	PIN, cotter, 1/4" x 2"	
39	047733	1	MOTOR AND FAN, blower (Serviced only as a unit)	
	906692	2	CAPSCREW, 1/4"NC x 3/8"	
	904204	2	LOCKWASHER, 1/4"	
40	047732	1	PLUG, motor connection	
41	042750	1	PLATE, air regulating	
42	033200	1	SCREW, thread-cutting, cross-recessed-hd., 1/4"NF x 3/4"	
43	031580	1	SPRING, air regulating plate	
44	AM-8691	1	CLIP, motor cable (single, closed type, 1/4" diam., 13/32" bolt hole)	
			NOTE: Items listed below comprise the PRE-HEATER ADAPTING PARTS which are mounted permanently on the engine.	
45	047730	1	JACK, motor connection (Includes CABLE and mounting NUT)	
46	048728	1	ELBOW, inlet	
47	035439	1	CAPSCREW, 3/8"NC x 1"	
	904206	1	LOCKWASHER, 3/8"	
48	042694	1	COVER, inlet elbow	
49	042692	1	GASKET, inlet elbow cover	
50	042693	1	PIN, hinge, inlet elbow cover	
	904001	2	PIN, cotter, 3/32" x 1/2"	
51	042691	2	STUD, fastening, inlet elbow cover	
	915017	2	NUT, wing, 3/8"NC	
	911115	2	WASHER, plain, SAE std., 3/8"	
52	U-2787	2	PIN, hinge, inlet elbow cover stud	
	900970	2	PIN, cotter, 1/16" x 1/2"	
53	049205	1	GASKET, inlet elbow to cylinder block (heat resistant)	

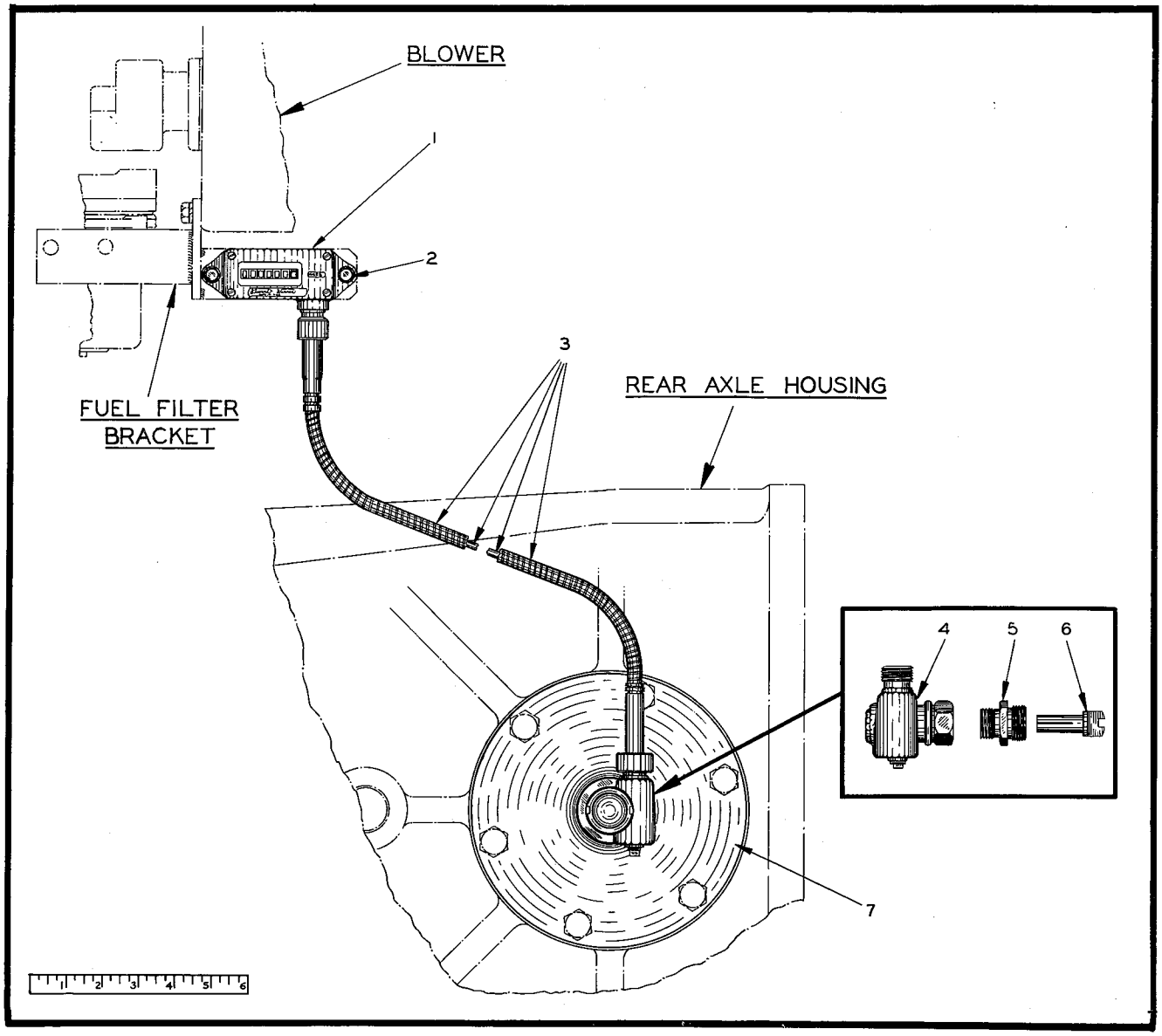

PLATE 1388A—ODOMETER

ODOMETER

USAGE: Special Equipment

ITEM	PART NUMBER	QTY.	DESCRIPTION	KIT NUMBER
1	031491	1	ODOMETER (registers miles)	
	031492	1	ODOMETER (registers kilometers)	
2	905657	2	CAPSCREW, 1/4"NC x 1"	
	911024	2	NUT, 1/4"NC	
	904204	2	LOCKWASHER, 1/4"	
3	605220	1	SHAFT ASSEMBLY, flexible (27" long)(Consists of 1 HOUSING and 1 CABLE. Serviced only as a unit)	
4	605217	1	ANGLE JOINT ASSEMBLY (Serviced only as a unit)	
5	605221	1	SLEEVE, angle joint adapting	
6	605222	1	TIP, angle joint driving	
7	605056	1	COVER, rear axle cross shaft bearing (Used in place of standard COVER 066751)	

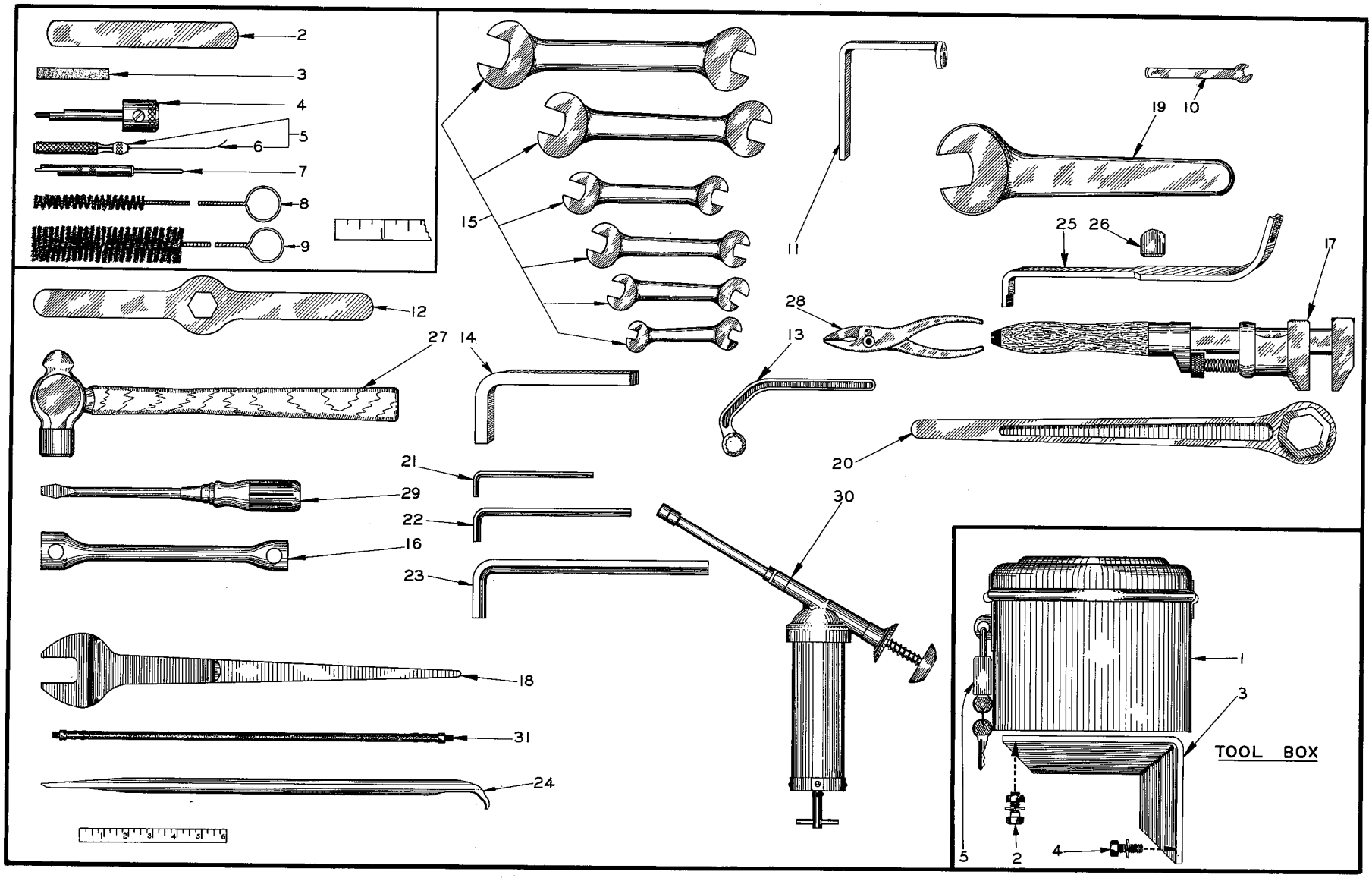

PLATE 1385C—SPECIAL TOOLS AND TOOL BOX

SPECIAL TOOLS
(See Plate 1385C)

ITEM	PART NUMBER	QUANTITY AD3	QUANTITY AD4	DESCRIPTION	KIT NUMBER
2	074549	1	1	GAUGE, feeler, rocker clearance	060593
3	044814	1	1	STONE, sharpening	060593
4	059251	1	1	GAUGE, injector timing	060593
5	044822	1	1	VISE, pin, injector probing wire (Includes item 6)	060593
6	044818	1	1	WIRE, probing, injector spray tip	
7	044819	1	1	REAMER, injector spray tip	060593
8	044812	1	1	BRUSH, cleaning, injector rack hole	060593
9	044811	1	1	BRUSH, cleaning, injector fuel hole	060593
10	048193	1	1	WRENCH, push rod holding (5/16" open end)	
11	048163	1	1	WRENCH, push rod locking nut (1/2" open end)	
12	040284	1	1	WRENCH, injector nut	
13	040286	1	1	WRENCH, fuel pump removal	
14	043769	1	1	WRENCH, drain and filling plugs (90°, 1/2" square)	
15	012377	1	1	WRENCH KIT (6 WRENCHES 7/16" to 1-1/4" in a cloth case)	
16	603723	1	1	WRENCH, socket, tire rim nut	
17	912486	1	1	WRENCH, automotive, adjustable, 15"	
18	912554	1	1	WRENCH, structural, offset, 1-7/64" opening	
19	043421	1	1	WRENCH, fan belt adjustment	
20	040794	1	1	WRENCH, engine cranking	
21	912785	1	1	KEY, socket screw, hexagonal, long, 3/16"	
22	912787	1	1	KEY, socket screw, hexagonal, long, 5/16"	
23	912485	1	1	KEY, socket screw, hexagonal, long, 9/16"	
24	605206	1	1	TOOL, tire	
25	044835	1	1	TOOL, valve lifting and injector removing	
26	044825	1	1	FULCRUM, valve lifting and injector removing tool	
27	012387	1	1	HAMMER, ball peen, 1 lb.	
28	012389	1	1	PLIERS	
29	036268	1	1	SCREWDRIVER	
30	034239	1	1	GUN, grease (high pressure, push type, 9 oz. capacity)(See page 268 for repair parts)	
31	605230	1	-	HOSE, bleeding, hydraulic brakes (For Model AD3 Graders prior to #328)	

NOTE: For complete line of service tools for General Motors Diesel Engines, consult Kent-Moore Organization, General Motors Research Building, Detroit 2, Michigan.

TOOL BOX
(See Plate 1385C)

1	604943	1	1	BOX, tool
2	903630	4	4	CAPSCREW, 3/8"NC x 1"
	911026	4	4	NUT, 3/8"NC
	904206	4	4	LOCKWASHER, 3/8"
3	604855	2	-	BRACKET, supporting (Graders prior to #328)
	051196	2	2	BRACKET, supporting (Graders #328 and up)
4	903629	4	4	CAPSCREW, 3/8"NC x 3/4"
	904206	4	4	LOCKWASHER, 3/8"
5	912484	1	1	PADLOCK with KEYS

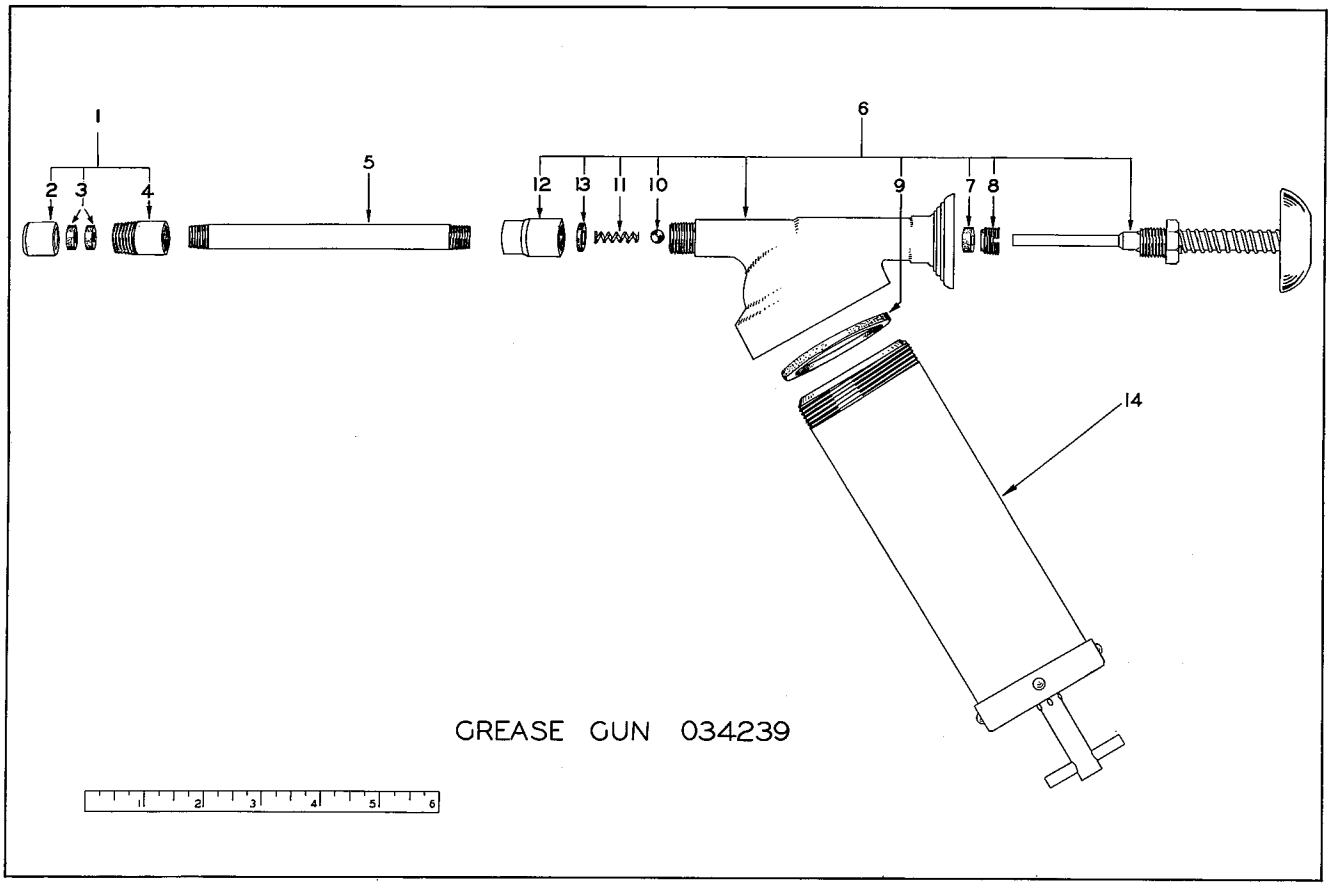

PLATE 1331—GREASE GUN REPAIRS

GREASE GUN 034239
(See Plate 1331)

ITEM	PART NUMBER	QTY.	DESCRIPTION	KIT NUMBER
1	034213	1	NOZZLE ASSEMBLY (Includes items 2 thru 4)	
2	034214	1	CAP, nozzle	
3	064026	2	PACKING, nozzle	
4	034216	1	BODY, nozzle	
5	034240	1	EXTENSION, nozzle	
6	034218	1	HEAD ASSEMBLY (Includes items 7 thru 13)	
7	034225	1	PACKING, plunger	
8	034226	1	SCREW, plunger packing	
9	034227	1	GASKET, container	
10	912738	1	BALL, steel, 7/32" diam.	
11	034223	1	SPRING, check	
12	034219	1	ADAPTER, nozzle	
13	034222	1	GASKET, nozzle adapter	
14	034229	1	CONTAINER ASSEMBLY (Includes SPRING, PISTON, CAP and HANDLE)	

RADIATOR CURTAIN
(See Plate 1868)

USAGE: Special Equipment

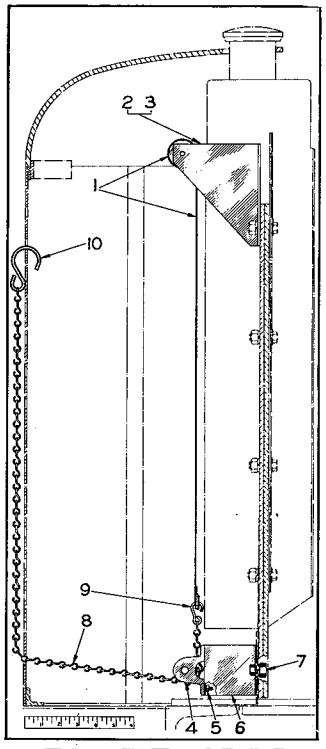

PLATE 1868

ITEM	PART NUMBER	QUANTITY AD3	QUANTITY AD4	DESCRIPTION
1	046353	1	-	CURTAIN ASSEMBLY (21" wide. Includes curtain ROLLER)(Used on first machines only. Unrolls upward)
	060653	1	1	CURTAIN ASSEMBLY (21-7/8" wide. Includes ROLLER)(Used on later machines. Unrolls downward)
2	057632	1	-	BRACKET, curtain mounting - left (Used with CURTAIN ASSEMBLY 046353 only)
	060652	1	1	BRACKET, curtain mounting - left (Used with CURTAIN ASSEMBLY 060653 only)
3	057633	1	-	BRACKET, curtain mounting - right (Used with CURTAIN ASSEMBLY 046353 only)
	060651	1	1	BRACKET, curtain mounting - right (Used with CURTAIN ASSEMBLY 060653 only)
4	057634	1	1	PULLEY, curtain adjusting chain
5	901287	2	2	SCREW, machine, filister head, #10-24NC x 5/8"
	901310	2	2	NUT, #10-24NC
	904203	2	2	LOCKWASHER, #10
6	064840	-	1	BRACKET, mounting, curtain pulley
7	903628	-	2	CAPSCREW, 3/8"NC x 5/8"
	911026	-	2	NUT, 3/8"NC
	904206	-	2	LOCKWASHER, 3/8"
8	057636	1	1	CHAIN, curtain adjusting
9	057638	1	1	HOOK, curtain adjusting chain (inside)
10	057637	1	1	HOOK, curtain adjusting chain (outside)

HOOD SIDE PLATES

USAGE: Special Equipment

ITEM	PART NUMBER	QUANTITY AD3	QUANTITY AD4	DESCRIPTION	KIT NUMBER
1	055892	1	-	PLATE ASSEMBLY, hood side - left	
	064542	-	1	PLATE ASSEMBLY, hood side - left	
2	056196	1	-	PLATE ASSEMBLY, hood side - right	
	064541	-	1	PLATE ASSEMBLY, hood side - right	
				NOTE: Each of above includes items 3 and 4	
3	033060	4	4	FASTENER, hold-down	
	900764	12	12	RIVET, fl-hd., 3/16" x 1/2"	
4	032834	4	4	HANDLE, lifting	
	900764	8	8	RIVET, fl-hd., 3/16" x 1/2"	
5	------	1	1	ANGLE, fastening - left (Not serviced. Welded to FRAME)	
6	------	1	1	ANGLE, fastening - right (Not serviced. Welded to FRAME)	

REAR BUMPER
(Not Illustrated)

USAGE: Special Equipment

ITEM	PART NUMBER	QTY.	DESCRIPTION	KIT NUMBER
1	057364	1	BUMPER, rear	
	912075	8	CAPSCREW, 5/8"NC x 5"	
	904209	8	LOCKWASHER, 5/8"	
	911029	8	NUT, 5/8"NC	

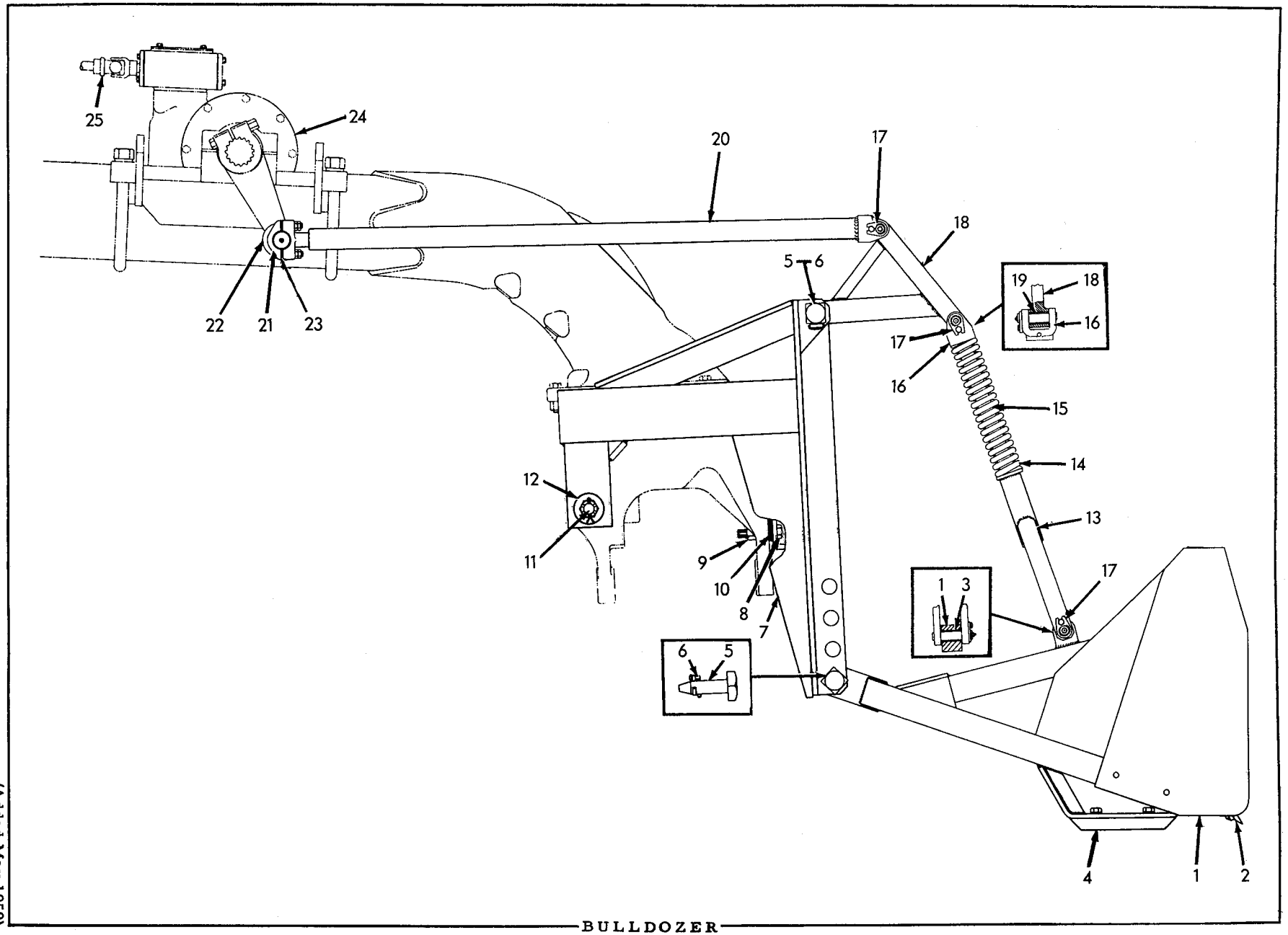

BULLDOZER

(Added May 1959)

USAGE: Special Equipment. For graders equipped with scarifier control.

ITEM	PART NUMBER	QTY.	DESCRIPTION	KIT NUMBER
1	090327	1	MOLDBOARD ASSEMBLY (Includes items 2 and 3)	
2	611561	1	EDGE, cutting	
	915206	13	BOLT, plow, 1/2"NC x 1-3/4"	
	904208	13	LOCKWASHER, 1/2"	
	911028	13	NUT, 1/2"NC	
3	606811	2	BUSHING, moldboard	
4	611554	2	SHOE, wear	
	906709	4	CAPSCREW, 3/4"NC x 1-3/4"	
	904369	4	LOCKWASHER, 3/4"	
5	611250	4	PIN, pivot	
6	611235	4	LOCK, pivot pin	
7	611256	1	FRAME, push	
8	085026	4	CAPSCREW, 7/8"NF x 4-1/2"	
9	070400	4	NUT, high, 7/8"NF	
10	611261	16	SHIM, spacing (1/16" thick. Use as req'd)	
11	611288	1	SHAFT, push frame	
	911061	2	NUT, slotted, 1-1/4"NC	
	918392	2	PIN, cotter, 7/32" x 2-1/2"	
12	611289	2	BUSHING, push frame shaft	
13	611569	2	TUBE, moldboard lift	
14	611580	2	SPRING, bumper	
15	611570	2	SHAFT, moldboard lift	
16	612044	2	CLEVIS, moldboard lift shaft	
17	609898	6	PIN, moldboard lift	
	903629	6	CAPSCREW, 3/8"NC x 1-3/4"	
	904206	6	LOCKWASHER, 3/8"	
	914465	6	FITTING, lubricating, straight, 1/8"NPT	
18	611566	2	BELLCRANK ASSEMBLY (Includes item 19)	
19	606811	4	BUSHING, bellcrank	
20	611567	2	LINK, moldboard lift	
21	053986	2	CAP, moldboard lift rod	
22	605665	2	U-BOLT	
	911049	8	NUT, jam, 5/8"NF	
23	053992	16	SHIM, moldboard lift rod cap (Use as req'd)	
24	------	-	LIFT ASSEMBLY (See SCARIFIER LIFT)	
25	------	-	CONTROL SHAFTS (See SCARIFIER CONTROL SHAFTS)	

(Added May 1959)

KIT NUMBER	DESCRIPTION
051584	CHANGEOVER KIT, air box drain (For converting graders prior to serial No. 328)
	1 S-903 INSTRUCTIONS
	1 043030 CLIP
	1 048245 TUBE
	1 910978 ELBOW
	1 911198 NUT
052676	BEARING KIT, crankshaft rear main (standard size)
	1 5179630 SHELL - lower
	1 5179631 SHELL - upper
	4 5159353 WASHER, thrust
	4 040398 PIN, dowel
052677	BEARING KIT, crankshaft rear main (.010" undersize)
	1 5192883 SHELL - lower
	1 5192884 SHELL - upper
	4 5159353 WASHER, thrust
	4 040398 PIN, dowel
052678	BEARING KIT, crankshaft rear main (.020" undersize)
	1 5192887 SHELL - lower
	1 5192888 SHELL - upper
	4 5159353 WASHER, thrust
	4 040398 PIN, dowel
052679	BEARING KIT, crankshaft rear main (.030" undersize)
	1 5192891 SHELL - lower
	1 5192892 SHELL - upper
	4 5159353 WASHER, thrust
	4 040398 PIN, dowel
058034	GASKET SET, engine major overhaul (Prior Eng. #3A-8330 only)
	1 040095 WASHER, fan spindle (cork)
	1 040097 GASKET, fan spindle washer
	1 040100 GASKET, fan
	1 040118 GASKET, air intake
	1 040149 GASKET, water connection
	1 040395 GASKET, oil filter case retainer
	2 040399 GASKET, relief valve plug
	3 040400 GASKET, hand hole cover bolt
	2 040942 GASKET, by-pass valve plug
	1 044872 GASKET, thermostat
	1 207046 GASKET, oil filter case
	1 3222489 GASKET, thermostat housing
	1 3222555 GASKET, water manifold cover
	2 3249110 GASKET (Not A-C. Discard)
	1 3290577 GASKET (Not A-C. Discard)
	3 5150020 GASKET, hand hole cover
	1 5150024 GASKET, water hole cover
	1 5150043 GASKET, cylinder head
	2 5150052 GASKET, engine lifter bracket
	1 5150054 GASKET, flywheel housing
	2 5150055 GASKET, flywheel housing
	1 5150057 GASKET, star cover
	2 5150059 GASKET, flywheel housing cover
	1 5150071 GASKET, balance weight cover
	1 5150115 GASKET, oil pan
	1 5150144 GASKET, water by-pass tube
	2 5150154 GASKET, oil cooler adapter
	1 5150155 GASKET, oil cooler housing
	1 5150181 GASKET, crankshaft front cover
	1 5150188 GASKET, water pump body
	1 5150191 PACKING, water pump outlet
	2 5150193 GASKET, pump to blower
	1 5150194 GASKET, exhaust manifold
	2 5150234 GASKET, blower end cover
	1 5150235 GASKET, blower to block
	2 5150246 GASKET, blower drive
	4 5150269 GASKET, cylinder head hole cover
	1 5150286 GASKET, blower drive support
	1 5150327 GASKET, rocker cover
	3 5150361 GASKET, water manifold

(Continued)

KIT NUMBER	DESCRIPTION		
058034	GASKET SET, engine major overhaul (Continued)		
	1	5150779	SCREEN, blower inlet
	1	5150889	GASKET, governor cover
	2	5150890	GASKET, governor weight housing
	1	5150900	GASKET, breather pipe
	1	5151190	GASKET, water by-pass tube
	3	5151370	GASKET, oil pipe
	1	5152904	GASKET, spacing
	1	5152944	GASKET, governor spring housing
	1	5153059	PACKING, governor shut-off shaft
	2	5153313	GASKET, oil pipe
	1	5153560	SEAL, pump to cooler
	1	5153627	GASKET, oil pump inlet
	2	5153902	GASKET (Not AD3. Discard)
	1	5154199	GASKET, oil by-pass valve
	1	5154215	GASKET, oil cooler element
	1	5155816	GASKET, water by-pass tube
	1	5156768	GASKET, relief valve plug
	1	5161003	GASKET (Not A-C. Discard)
	1	5165221	GASKET, governor cap
	1	5168176	GASKET, oil filling tube adapter
	2	5169478	GASKET (Not AD3. Discard)
	1	5177773	GASKET, relief valve plug
	1	5177798	GASKET, end plate
	1	5192918	GASKET SET, oil, cylinder head
	1	5226029	GASKET, fuel pump valve screw
	2	5230018	GASKET, fuel pump body
058035	GASKET SET, cylinder head (Model AD3) (Prior Eng. #3A-8330 only)		
	1	3222555	GASKET, water manifold cover
	2	3249110	GASKET (Not A-C. Discard)
	1	5150043	GASKET, cylinder head
	2	5150052	GASKET, lifter bracket
	1	5150194	GASKET, exhaust manifold
	4	5150269	GASKET, head hole covers
	1	5150327	GASKET, rocker cover
	3	5150361	GASKET, water manifold
	1	5150889	GASKET, governor cover
	2	5150890	GASKET, governor weight housing
	1	5150900	GASKET, breather pipe
	1	5155816	GASKET, water by-pass tube
	2	5169478	GASKET (Not AD3. Discard)
	1	5192918	GASKET SET, oil
058036	GASKET SET, piston ring replacement (Model AD3 Prior Eng. #3A-8330 only)		
	2	040399	GASKET, relief valve (Not AD3. Discard)
	2	040942	GASKET, by-pass valve plug (Not AD3. Discard)
	1	3222555	GASKET, water manifold cover
	2	3249110	GASKET (Not A-C. Discard)
	1	5150043	GASKET, cylinder head
	2	5150052	GASKET, lifter bracket
	1	5150115	GASKET, oil pan
	1	5150194	GASKET, exhaust manifold
	4	5150269	GASKET, head hole covers
	1	5150327	GASKET, rocker cover
	3	5150361	GASKET, water manifold
	1	5150889	GASKET, governor cover
	2	5150890	GASKET, governor weight housing
	1	5150900	GASKET, breather pipe
	3	5151370	GASKET, oil pipe
	2	5153313	GASKET, oil pipe
	1	5153627	GASKET, oil pump inlet
	1	5154199	GASKET, oil by-pass valve
	1	5155816	GASKET, water by-pass tube
	2	5169478	GASKET (Not AD3. Discard)
	1	5192918	GASKET SET, oil
058037	GASKET SET, engine major overhaul (Model AD4 Prior Eng. #4A-19529 only)		
	1	040095	WASHER, fan spindle (cork)
	1	040097	GASKET, fan spindle washer
	1	040100	GASKET, fan
	1	040118	GASKET, air intake
	1	040149	GASKET, water connection

(Continued)

KIT NUMBER	DESCRIPTION		
058037	GASKET SET, engine major overhaul (Continued)		
	1	040395	GASKET, oil filter case retainer
	2	040399	GASKET, relief valve plug
	4	040400	GASKET, hand hole cover bolt
	2	040492	GASKET, by-pass valve plug (Not AD4. Discard)
	1	044872	GASKET, thermostat
	1	207046	GASKET, oil filter case
	1	3222489	GASKET, thermostat housing
	1	3222555	GASKET, water manifold cover
	2	3249110	GASKET (Not A-C. Discard)
	1	3290612	GASKET (Not A-C. Discard)
	4	5150020	GASKET, hand hole cover
	1	5150024	GASKET, water hole cover
	1	5150044	GASKET, cylinder head
	2	5150052	GASKET, engine lifter bracket
	1	5150054	GASKET, flywheel housing
	2	5150055	GASKET, flywheel housing
	1	5150057	GASKET, star cover
	2	5150059	GASKET, flywheel housing cover
	1	5150071	GASKET, balance weight cover
	1	5150116	GASKET, oil pan
	1	5150144	GASKET, water by-pass tube
	2	5150154	GASKET, oil cooler adapter
	1	5150155	GASKET, oil cooler housing
	1	5150181	GASKET, crankshaft front cover
	1	5150188	GASKET, water pump body
	1	5150191	PACKING, water pump outlet
	2	5150193	GASKET, pump to blower
	2	5150195	GASKET, exhaust manifold
	2	5150234	GASKET, blower end cover
	1	5150236	GASKET, blower to block
	2	5150246	GASKET, blower drive
	4	5150269	GASKET, cylinder head hole cover
	1	5150286	GASKET, blower drive support
	1	5150328	GASKET, rocker cover
	4	5150361	GASKET, water manifold
	1	5150780	SCREEN, blower inlet
	1	5150889	GASKET, governor cover
	2	5150890	GASKET, governor weight housing
	1	5150900	GASKET, breather pipe
	1	5151190	GASKET, water by-pass tube
	3	5151370	GASKET, oil pipe
	1	5152904	GASKET, spacing
	1	5152944	GASKET, governor spring housing
	1	5153059	PACKING, governor shut-off shaft
	2	5153313	GASKET, oil pipe
	1	5153560	SEAL, pump to cooler
	1	5153627	GASKET, oil pump inlet
	2	5153902	GASKET (Not AD4. Discard)
	1	5154199	GASKET, oil by-pass valve
	1	5154215	GASKET, oil cooler element
	1	5155816	GASKET, water by-pass tube
	1	5156768	GASKET, relief valve plug
	1	5161003	GASKET (Not A-C. Discard)
	1	5165221	GASKET, governor cap
	1	5168176	GASKET, oil filling tube adapter
	2	5169478	GASKET (Not AD4. Discard)
	1	5177773	GASKET, relief valve plug
	2	5177798	GASKET, end plate
	1	5192919	GASKET SET, oil, cylinder head
	1	5226029	GASKET, fuel pump valve screw
	2	5230018	GASKET, fuel pump body
058038	GASKET SET, piston ring replacement (Model AD4 Prior Eng. #4A-19529 only)		
	2	040399	GASKET, relief valve plug (Not AD4. Discard)
	2	040942	GASKET, by-pass valve plug (Not AD4. Discard)
	1	3222555	GASKET, water manifold cover
	2	3249110	GASKET (Not A-C. Discard)
	1	5150044	GASKET, cylinder head
	2	5150052	GASKET, lifter bracket
	1	5150116	GASKET, oil pan
	2	5150195	GASKET, exhaust manifold
	4	5150269	GASKET, head hole cover

(Continued)

KIT NUMBER	DESCRIPTION		
058038	GASKET SET, piston ring replacement (Continued)		
	1	5150328	GASKET, rocker cover
	4	5150361	GASKET, water manifold
	2	5150890	GASKET, governor weight housing
	1	5150889	GASKET, governor cover
	1	5150900	GASKET, breather pipe
	3	5151370	GASKET, oil pipe
	2	5153313	GASKET, oil pipe
	1	5153627	GASKET, oil pump inlet
	1	5154199	GASKET, oil by-pass valve
	1	5155816	GASKET, water by-pass tube
	2	5169478	GASKET (Not AD4. Discard)
	1	5192919	GASKET SET, oil, cylinder head
058039	GASKET SET, cylinder head (Model AD4)(Prior Eng. #4A-19529 only)		
	1	3222555	GASKET, water manifold cover
	2	3249110	GASKET (Not A-C. Discard)
	1	5150044	GASKET, cylinder head
	2	5150052	GASKET, lifter bracket
	2	5150195	GASKET, exhaust manifold
	4	5150269	GASKET, head hole covers
	1	5150328	GASKET, rocker cover
	4	5150361	GASKET, water manifold
	1	5150889	GASKET, governor cover
	2	5150890	GASKET, governor weight housing
	1	5150900	GASKET, breather pipe
	1	5155816	GASKET, water by-pass tube
	2	5169478	GASKET (Not AD4. Discard)
	1	5192919	GASKET SET, oil
060593	TOOL KIT, injector		
	1	044811	BRUSH, cleaning, rack hole
	1	044812	BRUSH, cleaning, fuel hole
	1	044814	STONE, sharpening
	1	044819	REAMER, spray tip
	1	044822	VISE, pin, probing wire
	1	059251	GAUGE, timing
	1	074549	GAUGE, feeler, rocker clearance
	1	------	CASE, cloth
061489	TRANSFER SET, instruction and marking (Model AD3)		
	2	040851	TRANSFER, name, "ALLIS-CHALMERS"
	1	042513	TRANSFER, caution, fan lubrication
	1	050838	TRANSFER, instruction, air pre-cleaner
	1	050842	TRANSFER, instruction, air cleaner
	2	053591	TRANSFER, identification, "MODEL AD3"
	1	055583	TRANSFER, check and lubrication guide
	1	060611	TRANSFER, instruction, fuel filter
	1	066051	TRANSFER, instruction, primer operation
	3	068831	TRANSFER, name, "ALLIS-CHALMERS"
	1	069335	TRANSFER, instruction, oil filter
065037	TRANSFER SET, instruction and marking (Model AD4)		
	2	040851	TRANSFER, name, "ALLIS-CHALMERS"
	1	042513	TRANSFER, caution, fan lubrication
	1	050838	TRANSFER, instruction, air pre-cleaner
	1	050842	TRANSFER, instruction, air cleaner
	1	060611	TRANSFER, instruction, fuel filter
	1	061136	TRANSFER, check and lubrication guide
	2	061210	TRANSFER, identification, "MODEL AD4"
	1	066051	TRANSFER, instruction, primer operation
	3	068831	TRANSFER, name, "ALLIS-CHALMERS"
	1	069335	TRANSFER, instruction, oil filter
065650	PUMP KIT, water		
	1	5159060	PUMP ASSEMBLY
	1	5150188	GASKET, pump body cover
	1	5150191	PACKING, pump outlet
	1	5150193	GASKET, pump to blower
	1	5153560	SEAL, pump to oil cooler
	1	5156770	SEAL, pump to oil cooler (Not AD. Discard)
	1	5159457	SEAL, pump to oil cooler (Not AD. Discard)

KIT NUMBER	DESCRIPTION		
066122	PRIMER KIT, engine starting (For graders prior to serial No. 2768)		
	1	036032	CAPSCREW, 3/8"NF x 3/4" (Not AD. Discard)
	2	065868	CLIP, tube supporting
	1	065946	GROMMET, tube protecting
	1	065953	CLIP, tube supporting (Not AD. Discard)
	1	066232	CHANNEL, dispenser mounting (Requires welding to SEAT)
	1	066253	TUBING, copper, 1/8"O. D., 10 ft. roll
	1	066260	CLIP (Not AD. Discard)
	6	066261	GASKET, dispenser mounting (Not AD. Discard)
	1	066516	ADAPTER, outlet check valve
	1	066517	ELBOW ASSEMBLY, fuel spray
	1	068880	DISPENSER ASSEMBLY, priming fuel
	4	901310	NUT, #10-24NC
	4	904203	LOCKWASHER, #10
	2	904204	LOCKWASHER, 1/4"
	1	904206	LOCKWASHER, 3/8" (Not AD. Discard)
	2	905655	CAPSCREW, 1/4" x 1/2"
	2	911024	NUT, 1/4"NC
	1	911041	NUT, 3/8"NF (Not AD. Discard)
	4	913464	SCREW, machine, hex-hd., #10-24NC x 7/8"
	3	915486	RING ASSEMBLY, Sealastic fitting, 1/8" tube
	3	915488	NUT, Sealastic fitting, 1/8" tube
	2	915490	CONNECTOR, Sealastic, female, 1/8"NPT, 1/8" tube(1 reqd. on AD)
	1	915492	ELBOW, Sealastic, female, 1/8"NPT, 1/8" tube
	1	915556	CONNECTOR, Sealastic, male, 1/8"NPT, 1/8" tube
	1	5151910	WASHER, check valve adapter
	1	5153358	VALVE ASSEMBLY, outlet check
208358	FACING KIT, engine clutch (AD3 graders prior to #328)		
	6	207878	FACING
	6	207879	FACING
	48	912380	RIVET
5191937	ELEMENT KIT, injector fuel filter		
	2	5226186	GASKET, filter element cap
	1	5226564	RING, nut sealing
	2	5228013	ELEMENT, fuel filtering
5192248	SEAL KIT, blower drive shaft cover (Use to convert engines prior to #371-23901)		
	1	5172864	SEAL
	1	5173695	CLAMP
	1		INSTRUCTIONS
5192441	HUB KIT, blower rotor gear (Model AD3)		
	6	904205	LOCKWASHER, 5/16"
	6	910335	WASHER, plain, SAE std., 5/16"
	3	5173362	BOLT, coupling
	3	5173363	BOLT, coupling
	3	5173364	SPACER, driving hub plate
	1	5173365	PLATE, driving hub
	1	5173366	HUB, driving
5192743	RING KIT, piston		
	2	5179836	RING, oil control
	2	5192770	RING, compression (plain)
	2	5177186	RING, compression (chrome plated)
5192747	CYLINDER KIT		
	1	5153590	PIN, piston
	1	5171524	PISTON ASSEMBLY
	1	5171520	LINER, cylinder
	1	5192743	RING KIT
5192751	HUB KIT, blower rotor gear (Model AD4)		
	6	904205	LOCKWASHER, 5/16"
	6	910335	WASHER, plain, SAE std., 5/16"
	3	5173362	BOLT, coupling
	3	5173363	BOLT, coupling
	3	5173364	SPACER, driving hub plate
	2	5173365	PLATE, driving hub
	1	5173366	HUB, driving

SERVICE KITS

KIT NUMBER	DESCRIPTION		
5192874	SHELL KIT, crankshaft main bearing (standard size)		
	1	5179630	SHELL - lower
	1	5179631	SHELL - upper
5192875	SHELL KIT, crankshaft main bearing (.002" undersize)		
	1	5192879	SHELL - lower
	1	5192880	SHELL - upper
5192876	SHELL KIT, crankshaft main bearing (.010" undersize)		
	1	5192884	SHELL - upper
	1	5192883	SHELL - lower
5192877	SHELL KIT, crankshaft main bearing (.020" undersize)		
	1	5192887	SHELL - lower
	1	5192888	SHELL - upper
5192878	SHELL KIT, crankshaft main bearing (.030" undersize)		
	1	5192891	SHELL - lower
	1	5192892	SHELL - upper
5192895	SHELL KIT, connecting rod (standard size)		
	1	5179632	SHELL - upper
	1	5179633	SHELL - lower
5192896	SHELL KIT, connecting rod (.002" undersize)		
	1	5192881	SHELL - upper
	1	5192882	SHELL - lower
5192897	SHELL KIT, connecting rod (.010" undersize)		
	1	5192885	SHELL - upper
	1	5192886	SHELL - lower
5192898	SHELL KIT, connecting rod (.020" undersize)		
	1	5192889	SHELL - upper
	1	5192890	SHELL - lower
5192899	SHELL KIT, connecting rod (.030" undersize)		
	1	5192893	SHELL - upper
	1	5192894	SHELL - lower
5193239	SEAL KIT, water pump		
	1	040428	SEAL, impeller
	1	040430	SPRING, impeller seal
	1	040431	GUIDE, impeller seal spring
	1	914836	PIN, groove, 3/16" x 7/8"
	1	2007105	RING, impeller seal clamping
	1	5150188	GASKET, body cover
	1	5150191	PACKING, pump outlet
	1	5150193	GASKET, pump to blower
	1	5153443	WASHER, sealing
	1	5153474	CUP, impeller seal retaining
5227324	TIP KIT, injector		
	1	5227210	SPRING, valve
	1	5227318	STOP, valve
	1	5227321	TIP, spray
	1	5227323	VALVE ASSEMBLY

SERVICE KITS

KIT NUMBER	DESCRIPTION
075768	WHEEL KIT (Special. Used to change rear tandem wheel from splined type to tapered keywayed type on grader w/Electric Brakes.

32	054900	SHIM, brake armature
1	066986	KEY, tandem wheel
1	066990	SPROCKET AND SHAFT
1	075666	WHEEL, tandem
1	075767	SEAL, oil, wheel shaft
1	911446	PIN, cotter, 3/8" x 2-3/4"

076097 WHEEL KIT (Special, Used to change front tandem wheel from splined type to tapered and keywayed type on grader w/Elec. Brakes).

32	054900	SHIM, brake armature
1	066986	KEY, tandem wheel
1	066988	SPROCKET AND SHAFT
1	075666	WHEEL, tandem
1	075767	SEAL, oil, wheel shaft
1	911446	PIN, cotter, 3/8" x 2-3/4"

NUMERICAL INDEX

Part No.	Page
FC-17	147
U-78	131
U-171	129, 193, 217
FD-273	273, 149
U-314	131
FE-343	147
FD-354	149
FD-459	149
U-479	49 thru 257
FC-607	147
FC-621	147
FC-643	147
FC-718	149
FC-732	147
FC-779	149
FD-962	147
FC-965	150
FC-966	150
FC-996	147
FC-1241	150
FC-1242	150
FC-1243	150
FC-1266	147
FE-1284	150
FE-1285	150
FD-1394	149
FC-1470	149
MA-1526	181
FC-1587	150
U-1671	99
FC-1829	147
FC-1918	149
FC-1919	149
FC-2422	150
U-2573	181, 185, 244
FC-2579	150
U-2787	264
FD-2795	147
FC-2832	147
FC-2931	151
FC-2933	151
U-3188	21, 145
U-3201	120
FC-4166	151
FC-4167	151
FC-4168	151
FC-4169	151
FC-4170	151
FD-6560	149
FD-6580	149
FC-6766	150
FC-6783	150
FC-6794	149
FC-6797	149
FC-6802	149
FC-6905	149
FC-6906	150
FC-6907	150
FC-6908	149
FC-6911	150
FC-6912	150
FC-6915	150
FC-6917	149
FC-6919	150
FC-6920	150
FC-6922	149
FC-7289	149
FC-7290	149
FC-7572	149
FC-7573	149
FC-7617	149
FC-7618	149
FC-8366	149
8526	35
AM-8578	134
AM-8691	146 thru 264
AM-8763	53 thru 257
AM-8801	11, 26, 130
FC-9054	149
AM-9622	257
011258	254
012377	267
012387	267
012389	267
012526	183, 187, 245
012767	182 thru 244
012871	13
012992	46
013058	21 thru 221
013059	107, 124, 191
013238	139
016702	263
023176	53, 87, 89
023633	118 thru 167
023756	109, 159
031055	173
031337	89, 221, 222
031491	265
031492	265
031580	264
031805	221
031806	229
032834	269
033043	227
033056	232, 234, 254
033060	269
033067	203, 218
033068	152
033069	232, 234
033072	121, 124, 214
033075	114, 145
033200	264
033231	229
033288	255
033751	35, 37
034076	221, 222, 263
034152	226
034213	268
034214	268
034216	268
034218	268
034219	268
034222	268
034223	268
034225	268
034226	268
034227	268
034229	268
034239	267
034240	268
034632	226, 227, 235
034910	221
034911	221
034914	40
034917	232
034964	25 thru 209
035018	43
035061	203, 249
035159	60
035190	114
035220	11, 13
035221	129, 207
035236	107
035244	203, 214, 245
035248	232, 233
035336	46, 47
035439	11 thru 264
035440	232, 233
035712	13, 103, 233
035733	46, 47
035887	129
036032	13 thru 254
036268	267
036546	173, 239, 241
036707	141
036997	259, 261
037450	14, 31, 33
040011	23
040085	103
040086	103
040087	103
040088	103
040089	103
040090	103
040093	103
040094	103
040095	103
040096	103
040097	103
040098	103
040099	103
040100	103
040118	81, 83
040128	230
040144	99
040145	99
040149	99
040152	221
040161	213, 218
040162	213, 218
040163	213, 218
040164	213, 218
040226	209, 221
040276	99
040284	267
040286	267
040290	40
040302	213, 218
040327	40
040328	40
040330	40
040331	40
040352	84
040353	84
040354	84
040359	84
040360	84
040378	37, 72, 78
040382	35, 37
040383	46, 47
040391	69
040395	35
040397	71
040398	17
040399	29, 31, 33
040400	9, 87, 89
040401	71
040403	65, 70, 71
040404	72
040426	11
040428	101
040430	101
040431	101
040549	230
040570	83
040701	203
040704	203
040705	203
040742	49, 51, 53
040788	40
040794	267
040796	59, 227
040798	47
040805	40
040834	18
040842	49
040851	143
040891	54
040896	54
040897	54
040929	54
040930	54
040931	54
040932	54
040936	222
040942	39
040963	221
040968	221
040969	221, 223
040973	221, 223
040974	221, 223
041225	227
041234	46, 47
041236	47
041242	41
041250	230
041251	9
041262	41
041303	247
041318	221, 223
041441	103
041516	191
041557	79, 81
041614	46
041615	46
041616	46
041617	46
041638	203
041639	203, 205
041641	99
041911	11
041913	13
041914	13, 35, 37
041915	13, 41
041916	77
041917	11
041919	227
041945	56
041959	11
041965	56
041966	56
041972	56
041975	56
042265	11, 13
042426	40
042513	142
042534	231
042600	229
042606	49, 51
042639	49, 51
042641	49, 51
042645	49, 51
042676	203
042691	264
042692	264
042693	264
042694	264
042713	263
042715	263
042716	263
042717	263
042718	263
042721	263
042722	263
042723	263
042724	263

NUMERICAL INDEX

Part No.	Page
042726	263
042725	263
042727	264
042728	264
042729	264
042730	263
042738	263
042739	263
042743	263
042744	263
042745	264
042747	264
042750	264
042751	263
042752	263
042753	264
042979	103
042986	77, 103
042987	65
042989	69
042990	70
042991	78
043011	161
043021	70, 71, 72
043030	15
043128	57
043130	55, 57
043132	57
043344	51, 53
043421	267
043733	37
043769	267
043852	85
043853	85
043856	85
043860	85
043886	11, 15
043991	85
044044	226
044211	221, 223
044249	35, 37
044255	85
044256	85
044257	85
044467	103
044741	191
044811	267
044812	267
044814	267
044818	267
044819	267
044822	267
044825	267
044835	267
044872	99
044873	99
044902	236
044918	85
044988	79, 81
045295	14 thru 249
045312	9 thru 249
045447	107
045496	109
045617	127
046321	31 thru 214
046353	269
046419	160
047478	63, 65
047730	264
047732	264
047733	264
047734	263
047735	263
047738	263
047744	263
047747	263
047883	81
048068	57
048142	225, 235
048145	59
048163	267
048193	267
048245	15
048384	71
048603	89
048604	89
048605	89
048606	89
048607	89
048608	89
048661	89, 91
048728	264
048734	263
048799	223
049108	218
049149	160
049205	264
049628	117
049659	263
049666	56
049991	115
049993	115
050288	225
050291	199
050293	117
050345	190
050734	81, 83
050735	81, 83
050751	209
050838	143
050839	243
050840	182, 186
050842	143
050856	182, 186
050889	229
050898	167
050903	181, 185
050904	182, 186, 243
050905	244
050906	186
050912	243
050913	182, 186, 243
050914	182
050926	157
050928	167
050936	119
050937	118
050938	119
050939	117
050940	167
050941	119
050948	167
050950	209
050952	117
050959	169
050961	209
050963	209
050965	209
050969	222
050972	191
050975	193
050988	81
050992	51
050993	51
050996	159
050998	170
050999	159
051001	193
051002	193
051003	193
051004	193
051005	223, 225
051006	89, 223
051007	222
051025	49, 51
051027	193
051028	193
051033	115
051037	152
051042	115
051043	169
051044	127
051045	169
051046	169
051047	127
051048	129
051049	127, 217
051078	169
051079	191
051080	40
051084	160
051092	211
051094	189
051097	169
051137	191
051138	191
051140	134
051141	134
051142	133
051145	134
051146	134
051148	133
051149	133
051150	133
051151	129
051152	133
051153	40
051179	227
051191	89
051192	110
051193	152
051194	109
051195	222
051196	267
051198	129
051199	134
051201	110
051202	109
051203	110
051204	109
051220	222
051239	153
051259	110
051260	109
051262	225
051348	226
051473	29 thru 39
051504	47
051505	47
051506	47
051517	83
051518	83
051584	270
051655	183, 186, 244
051673	117
051677	110
051819	99
051856	109
051864	115
051867	152
051986	217
052090	81
052224	199
052351	205
052357	115
052358	115
052390	51
052519	130
052641	259, 261
052652	31
052676	270
052677	270
052678	270
052679	270
052960	169
053003	182
053018	175
053019	173
053036	167
053037	170
053038	167, 170
053048	181
053069	185
053070	185
053094	209
053114	157 thru 246
053119	157 thru 246
053120	157 thru 246
053121	157 thru 246
053122	194, 198, 246
053123	194, 197, 245
053124	198
053125	198
053126	197
053191	243
053240	157 thru 246
053251	241
053258	244
053259	244
053270	153
053434	153
053525	211
053542	164
053543	164
053591	142
053616	123, 145
053624	143
053635	225, 235
053667	81, 83
053668	81
053669	18
053698	121
053830	203, 205
056913	190
053926	160
053986	183 thru 241
053988	157
053991	191
053992	183 thru 241
053994	173
054054	232
054055	232
054118	113
054119	113
054120	113
054121	113
054122	113
054123	113
054124	113
054125	113
054126	113
054127	113
054128	113
054129	113
054130	29 thru 113
054131	113

NUMERICAL INDEX

Part No.	Page
054132	113
054182	159
054217	155
054289	229
054304	62
054305	62
054324	209
054325	229
054342	103
054453	129
054649	109
054683	155
054684	155
054686	155
054687	155
054688	155
054689	155
054690	155
054691	155
054692	155
054693	155
054694	155
054695	155
054696	155
054697	155
054698	155
054700	155
054747	197
054784	164
054785	163
054831	177
054832	177
054835	177
054836	177
054840	177
054841	177
054842	177
054845	178
054846	178
054847	177
054848	177
054853	139
054858	209
054876	141
054882	153
054890	255
054900	153
054903	156
054904	156
054905	156
054906	156
054907	156
054908	156
054909	156
054910	156
054911	156
055033	189
055044	231
055244	43
055245	59, 247
055341	83
055373	167
055414	256
055420	191
055456	191
055544	209
055583	142
055673	247
055733	157 thru 246
055794	200
055795	129
055812	129
055892	269
055903	257
055991	247
055992	247
056069	141
056125	256
056126	256
056168	113
056196	269
056265	157
056383	157
056586	119
056639	155
056640	153
056694	235
056764	153
056765	153
056919	239, 241
056922	239, 241
056927	239, 241
056928	239, 241
056939	201
056940	190, 201
056941	200
056942	190, 200
056985	190
056999	118
057043	251
057059	251
057060	251
057071	251
057072	251
057079	255
057080	255
057083	254, 255
057084	254, 255
057085	254, 255
057095	255
057097	255
057101	255
057103	255
057105	255
057106	255
057109	254
057110	254
057115	255
057116	255
057119	253
057120	253
057121	253
057123	253
057127	253
057129	253
057135	253
057136	253
057137	253
057138	254
057144	254
057145	254
057146	254
057148	254
057149	254
057150	254
057151	254
057152	254
057154	255
057157	254
057162	254
057164	253
057171	253
057175	253
057176	253
057182	225
057218	222
057322	259
057329	259, 261
057364	269
057380	259, 261
057397	259
057398	259
057397	261
057399	259
057426	259, 261
057487	259, 261
057495	254
057496	254
057499	259
057506	259, 261
057632	269
057633	269
057634	269
057636	269
057637	269
057638	269
057742	121
057809	130
057810	131
057812	130
057941	109
057942	109
057943	109
057944	109
057956	130
058034	270, 271
058035	271
058036	271
058037	271, 272
058038	272, 273
058039	273
058048	205
058050	205
058122	253
058263	254
058264	255
058265	255
058266	255
058428	56
058429	56
058430	56
058436	259, 261
058438	259, 261
058439	259, 261
058440	259, 261
058441	259, 261
058442	259, 261
058443	259, 261
058444	259, 261
058445	259
058446	259
058723	85
058725	85
058751	241
058752	241
058753	241
058966	117
058967	120
058968	117, 120
058974	120
059022	118
059023	118
059089	117
059091	118
059092	118
059093	117
059094	118
059095	119
059101	117
059102	118
059103	118
059120	119
059184	257
059251	257
059259	83
059291	84
059292	84
059294	84
059295	83
059297	84
059538	101
059788	118
059789	118
059812	181, 185
060553	109
060593	273
060594	142
060611	143
060651	269
060652	269
060653	269
060670	141
060677	51, 53, 59
060769	143
060788	195
060994	130
061085	119
061086	131
061087	119
061088	119
061089	131
061090	131
061093	120
061094	120
061095	120
061099	218
061136	142
061173	197
061177	197
061178	198
061179	244
061180	244
061181	182, 186, 243
061182	182, 186, 243
061185	198
061195	7
061201	7
061203	18
061205	217
061207	218
061210	143
061270	205
061276	205
061283	99
061289	209
061479	177
061489	273
061674	139
061812	59
061814	59
061817	43
061842	130
061875	197
061876	199
061878	199
061936	235
061946	143
061952	83
062030	43
062044	59
062101	60
062107	135
062108	59
062121	43
062122	43
062124	43

NUMERICAL INDEX

Part No.	Page
062125	43
062159	241
062160	241
063822	141
063886	60
063887	60
063888	60
063889	60
063890	60
063891	60
063892	60
063893	60
063896	60
063897	60
063898	60
063899	60
063988	186
063989	244
063996	135
063999	135
064006	135
064005	135
064010	135
064013	135
064016	135
064026	268
064085	194
064086	193
064088	194
064129	133
064322	59
064439	247
064468	214
064469	194
064476	247
064477	247
064485	152
064487	152
064491	253
064500	253
064502	253
064504	247
064510	253
064517	254
064519	253
064526	247
064541	269
064542	269
064763	134
064840	269
064877	59
064879	59
064915	225
064977	226
064978	226
065035	256
065036	256
065037	273
065042	130
065118	117,118
065167	217
065169	217
065170	217
065172	217
065173	217
065175	218
065265	33
065411	85
065413	85
065414	141
065472	57
065473	57
065485	155
065486	155
065498	199
065525	173
065540	131
065560	255
065563	255
065564	255
065577	55,57
065578	55,57
065579	55,57
065581	57
065582	55
065583	55
065584	55
065585	55
065586	55
065590	55
065593	57
065596	51,53
065621	57
065628	159
065650	273
065665	51,53
065679	51
065681	51,53
065838	225
065839	222
065868	91
065917	26
065946	91
065963	225
065964	225
065975	81
065976	83
066051	143
066122	274
066175	231
066200	209
066201	209
066242	91
066246	159
066248	94
066249	94
066250	94
066251	94,95
066252	94,95
066253	91
066254	94
066255	94,95
066256	94
066309	182,186,243
066362	161
066363	160
066364	160
066365	160
066435	261
066437	261
066442	261
066443	261
066444	261
066467	236
066516	91,92
066517	91
066580	261
066627	160
066631	160
066632	160
066633	160
066673	130
066674	130
066697	89
066699	89
066751	130
066782	89,91
066872	93
066873	93
066874	93
066875	93
066876	93
066877	93
066878	93
066879	190,200
067402	164
067424	164
067426	164
067481	55
067522	164
067524	163
067525	159
067526	164
067642	84
067937	143
068190	139
068191	53
068195	232
068197	119
068199	139
068302	177
068305	177
068320	109
068389	115,121,214
068495	91
068496	91
068625	53
068675	209
068727	53
068729	53
068731	211
068732	211
068741	211
068743	211
068744	211
068746	211
068755	211
068760	211
068761	211
068783	234
068815	89
068822	59
068823	59
068825	59
068831	143
068875	95
068876	95
068877	95
068878	95
068879	95
068880	91
068881	95
068908	110
068975	109
068976	109
069004	101
069164	95
069171	25
069317	236
069335	143
069951	199
070385	203,218
070467	251
070960	146,203,207
071798	214
071799	203
071800	214
071808	214
071810	203
071995	214
072369	203
073357	143
073424	18
073753	53
073754	53
074263	99
074549	267
074577	143
074578	143
074579	143
074581	143
074582	143
074700	170
204766	118
204786	118
204843	112
204844	112
204891	112
204892	112
204894	112
204895	112
205342	120
206641	259
207046	35
207091	153,227
207169	112
207170	112
207510	107
207588	112
207878	112
207879	112
207880	112
208358	274
208540	56
209359	99
209826	229
209983	190,200
210740	119
211013	107,109
211530	118,119
211567	141
211581	141
217684	112
223255	99
223914	263
224151	263
516686	191
600182	87,222
600236	139,173,183
600665	145,233
600675	146
600793	191
600799	109,190
600899	191
600909	191
600923	191
600940	124,190,193
600961	173
600970	245
601133	173
601181	177
601288	182,186,243
601376	225,235
601405	141
601438	178
601448	167,175
601449	167,175
601455	182,185,244
601456	182,185,244
601463	181,186
601464	182,185
601466	185
601467	181,185
601500	177
601501	177
601502	177

NUMERICAL INDEX

Part No.	Page
601503	177
601504	177
601505	177
601663	244
601684	245
601692	139
601717	244
601771	173
601825	181, 185, 243
601833	182 thru 244
601835	182, 185
601837	185
601838	181, 186, 244
601839	181, 186, 244
601841	181, 185
601842	181, 185
601935	124 thru 246
601936	170
601940	170
601941	170
601949	161
601966	169
601967	170
601968	169
601972	173 thru 244
601997	238
602028	244
602068	160
602170	194
602172	194
602179	190
602189	191
602198	173
602199	173
602200	173
602201	173
602207	182, 186, 243
602209	244
602214	183
602224	183, 187
602230	226
602234	167
602237	175
602248	173
602258	139
602264	167, 175
602265	167, 175
602268	167, 175
602269	167, 175
602270	167, 175
602271	175
602272	167, 175
602273	169, 175
602274	167, 175
602277	167
602280	167
602328	194, 245
602342	194
602345	193
602449	178
602451	178
602457	178
602462	167, 175
602510	245
602522	238, 241
602531	244
602560	175
602640	182, 186, 243
602641	182, 185, 244
602642	187
602646	186
602647	182, 185
602650	186
602651	186
602652	182, 186, 243
602653	182, 186, 243
602654	181, 185
602663	173
602664	173
602677	173
602688	173
602691	187
602721	173
602763	183
602765	139
602827	139
602836	194
602944	103
602989	244
603007	167, 175
603010	124, 185
603014	244
603015	243
603102	245
603106	243
603107	243
603156	178
603157	178
603232	175
603233	238
603408	175
603419	187
603431	191
603462	244
603488	141
603489	141
603585	175
603684	225, 235
603723	267
603774	225, 235
603775	225
603989	183
604066	169
604067	169
604089	170
604096	181
604104	160
604107	139
604109	159
604110	160
604112	18
604144	159
604150	173
604153	173
604154	175
604171	133
604173	189, 200
604177	7
604181	139
604192	139
604214	121
604215	121
604216	121
604220	203
604221	99
604223	195
604226	141
604228	157
604229	214
604230	214
604231	114, 145
604232	214
604233	214
604235	214
604238	214
604239	7
604240	7
604241	7
604242	7
604243	203, 218
604248	81
604249	173
604252	175
604257	175
604258	175
604270	173
604271	46
604272	173
604273	173
604279	159
604280	167
604283	170
604284	170
604285	170
604286	170
604287	167
604288	167
604289	159
604290	160
604292	160
604293	170
604296	169
604297	170
604306	185
604307	185
604316	189
604325	181
604334	170
604338	169
604342	169
604343	160
604345	161
604346	167
604347	124
604349	161
604350	160
604354	170
604357	169
604360	221
604361	141
604362	183
604364	183
604366	183
604367	182
604368	182
604369	181
604370	181
604372	181
604373	181, 191
604374	181
604375	181
604377	134
604380	133
604382	181, 185
604383	181, 185
604387	160, 167, 175
604388	160, 167, 175
604389	182, 185, 244
604405	131
604436	191
604438	191
604439	190, 200
604441	190
604442	190
604443	190
604446	190
604447	191
604448	190
604450	190, 200
604451	189, 200
604452	190
604453	191
604454	190
604455	190
604456	190, 200
604457	190, 201
604458	190
604459	190
604460	124, 193
604461	193
604465	190, 200, 201
604466	190
604470	133
604474	133
604477	134, 135
604479	134
604480	134, 135
604481	133
604482	133
604483	134
604484	133
604486	134
604487	133
604488	133
604489	133
604490	159
604491	141
604493	139
604500	139
604506	203
604518	203
604524	203
604525	99
604527	203
604528	203
604529	203
604532	203
604536	194
604537	193
604538	193
604539	194
604540	193
604543	193
604544	193
604545	159
604549	157
604550	197, 246
604551	197, 245
604552	193
604553	193
604554	159
604555	159
604556	195
604558	195
604559	195
604560	197
604561	197
604562	198
604563	198
604564	197
604566	197
604617	139
604634	139
604635	139
604636	139
604637	139
604641	139
604642	139
604651	139
604652	207
604670	207
604674	207
604676	207
604677	207
604678	207
604687	207

NUMERICAL INDEX

Part No.	Page
604688	207
604689	207
604694	207
604696	207
604697	207
604698	207
604699	207
604702	207
604703	207
604704	207
604705	207
604706	207, 209
604707	207, 209
604708	207, 209
604709	203, 218
604710	203, 218
604714	203
604717	203, 218
604718	203, 218
604719	203, 218
604720	203
604721	203
604726	214
604728	214
604730	214
604734	214
604735	214
604738	214
604739	214
604740	214
604745	214
604746	214
604748	145
604749	114, 145
604752	114, 145
604753	114, 145
604756	114, 145
604757	114, 121, 145
604758	145
604759	145, 233
604761	145
604762	145
604765	145
604766	146
604767	146
604768	146
604769	146, 226
604783	124
604784	124
604786	124
604787	124
604788	124
604791	124
604795	124
604797	124
604804	124
604805	124
604806	124
604807	124
604808	49
604810	49
604811	49, 51
604815	87
604816	87
604817	87
604820	107, 110
604821	107, 110
604822	107
604823	107
604824	107
604826	114
604827	114
604828	114
604829	107
604831	107
604832	107
604835	107, 123
604836	107
604837	107
604838	107
604840	221
604841	221
604842	222
604843	222
604845	222
604846	222
604847	222
604848	222
604850	222
604853	221
604855	267
604856	231
604857	231
604858	231
604865	233
604869	233
604872	234
604873	225
604874	225
604876	222
604877	121
604878	121
604879	121
604880	121
604881	121
604883	146
604884	146
604885	121
604886	146
604887	121
604889	121
604896	123
604898	123
604899	115, 121, 211
604901	121
604904	121
604905	121
604906	121
604919	79
604922	161
604923	190, 200
604924	107
604925	159
604926	133
604927	134
604928	134, 135
604929	197
604933	79, 81
604938	79, 81
604939	79
604943	267
604944	79
604946	79
604949	169
604950	146
604951	191
604952	191
604954	191
604958	131
604962	130
604963	130
604968	129
604969	129
604971	129
604972	129
604973	130
604974	129
604977	130
604978	131
604981	130
604982	130
604984	130
604986	131
604987	131
604989	120
604990	120
604991	120
604992	120
604993	120
604994	117
604997	119
604998	117, 118
605001	117
605003	119
605004	119
605005	119
605006	118
605007	118
605008	119
605009	118
605010	119
605011	119
605012	119
605015	119
605020	123
605021	123
605022	123
605023	123
605024	123
605025	123
605026	123
605027	123
605028	123
605030	123
605031	124
605032	123
605034	124
605035	123
605036	161
605037	160
605043	203
605047	195
605048	195
605049	225
605050	225
605051	221
605052	145
605053	129
605054	49, 51
605055	49, 51
605056	265
605058	124
605064	207, 211
605065	177
605066	177
605067	177
605080	119
605081	119
605082	119
605083	129
605084	123
605085	130
605087	134
605088	141
605089	141
605090	119
605093	119
605095	123
605096	123
605097	123
605098	123
605099	146
605101	123
605106	130
605107	117
605108	107
605109	107
605110	146
605111	146
605126	190
605128	190
605132	130 thru 195
605133	195
605134	245
605135	238
605139	244
605148	238
605149	245
605150	221
605151	243
605154	221
605156	101
605158	231
605159	231
605160	227
605163	226
605164	51, 53, 225
605165	225
605168	226
605139	227
605174	117
605175	119
605176	195
605177	195
605194	145
605195	134
605196	141
605199	230
605200	233
605205	49, 53
605206	267
605207	200
605208	141
605209	189
605210	230
605217	265
605220	265
605221	265
605222	265
605227	43 thru 53
605228	51, 54, 55
605229	54, 55
605230	267
605231	163
605233	163
605234	163
605235	163
605236	163
605237	163
605238	163
605239	163
605240	163
605241	163
605242	163
605243	163
605244	163
605245	163
605246	163
605247	163
605248	163
605249	163
605250	163
605251	163
605252	164
605254	164
605255	164

NUMERICAL INDEX

Part No.	Page
605256	164
605257	164
605258	164
605259	164
605260	164
605261	164
605262	163
605263	163
605264	163
605265	163
605266	163
605267	163
605270	54
605280	249
605281	249
605282	249
605283	249
605284	250
605285	250
605294	141
605296	243
605302	243
605303	244
605304	191
605307	182, 186, 243
605308	183, 186, 243
605324	183
605328	243
605334	130
605335	130
605336	129
605337	129
605338	129
605339	129
605351	146
605352	146
605356	249
605359	249
605360	249
605361	249
605366	250
605367	250
605368	250
605369	250
605370	250
605371	250
605372	250
605373	250
605374	250
605375	250
605376	250
605377	250
605378	250
605379	249
605380	249
605381	249
605382	249
605383	249
605384	249
605385	250
605386	249
605396	99
605411	235, 257
605412	257
605416	130
605431	233
605433	183
605434	145
605436	145
605437	145
605438	169
605439	197
605440	190, 201
605447	197
605448	256
605450	146
605451	146
605452	146
605453	146
605454	257
605455	257
605457	81
605469	203
605476	131
605477	131
605478	118
605479	118
605483	197
605488	163
605492	131
605493	131
605494	131
605507	134
605508	134
605509	170
605510	167
605514	124
605515	124
605516	124
605520	246
605521	247
605525	247
605526	247
605565	247
605566	247
605567	247
605568	247
605569	247
605578	134
605596	229
605597	257
605603	123
605604	229
605606	229
605614	229
605618	229
605619	229
605620	229
605621	229
605622	229
605631	127
605632	127
605633	127
605634	127
605637	117
605642	141
605643	141
605665	183 thru 241
605714	117
605722	115
605732	81
605733	232, 234
605734	234
605735	129
605745	217
605746	217
605750	157
605754	47
605755	47
605762	217
605768	129
605771	110
605777	51
605782	109
605783	110
605785	115, 152
605793	41 thru 55
605794	109
605795	115, 152
605796	110
605797	110
605799	110
605800	245
605801	121
605807	153
605808	153
605812	152
605816	153
605817	153
605818	153
605822	89, 227
605828	81
605833	139
605837	195
605841	226
605842	223
605870	131
605874	226
605880	227
605885	225
605895	120
605896	117
605898	127
605899	127
605900	127
605901	127
605902	127
605903	127
605904	127
605905	120
605906	120
605909	127
605910	127
605911	117
605913	117, 118
605914	120
605915	120
605917	130
605918	141
605919	141
605942	7
605949	205
605956	205
605960	205
605963	205
605968	205
605973	127, 217
605975	217
605976	217
605977	218
605979	217
605981	217
605982	217
605983	217
605984	217
605986	217
605988	217
605989	217
606002	217
606003	129
606004	129
606005	129
606006	129
606007	129
606008	127
606009	127
606010	127
606011	127
606012	127
606013	127
606014	127
606015	217
606016	127
606017	127
606018	127
900374	169
900407	177
900547	145
900552	255
900553	255
900555	223
900560	156
900561	221
900574	217, 221, 222
900575	190, 200
900577	54
900578	198
900668	195 thru 261
900685	218
900764	269
900800	152
900801	19 thru 254
900802	103, 232
900805	115 thru 246
900806	9 thru 261
900807	118, 139, 160
900808	114 thru 244
900811	115, 152
900812	183, 190, 239
900813	49 thru 170
900816	43 thru 211
900817	191 thru 245
900818	207 thru 233
900819	191
900820	139
900822	159 thru 244
900825	169
900872	40
900886	56
900938	183
900940	214
900942	109 thru 261
900970	65 thru 264
901029	215
901165	160, 230, 249
901171	203, 205
901172	225
901217	72, 91
901228	71
901240	77
901267	173
901275	234
901287	269
901310	91 thru 269
901344	139, 170, 264
901345	131
901473	145
901651	59 thru 261
901652	17 thru 244
901653	167 thru 261
901666	9, 117, 130
901677	53
901702	145
901703	49, 89
901726	123
901751	145
901755	123
901825	89, 225
901838	59
901839	43, 53, 59
902279	173
902870	124, 214
903416	232
903584	79, 123
903625	226, 247
903626	133, 205

NUMERICAL INDEX

Part No.	Page
903627	133 thru 227
903628	135 thru 269
903629	107 thru 267
903630	79 thru 267
903631	51 thru 259
903632	81 thru 231
903633	110, 197, 205
903634	83
903635	207
903636	193
903638	121 thru 261
903639	7 thru 261
903640	130
903642	197
903748	264
903752	236
903771	60
903772	99 thru 247
903775	49 thru 225
903777	83
903781	121
903792	181 thru 244
903793	139
903835	124
904001	112 thru 264
904002	129
904203	72 thru 269
904204	23 thru 263
904205	9 thru 250
904206	11 thru 269
904207	11 thru 230
904208	7 thru 261
904209	9 thru 269
904210	139, 241
904223	9, 263
904224	9, 23
904260	9, 23, 101
904269	225
904271	59
904281	83
904369	139 thru 245
904381	115, 241
904541	115 thru 245
904706	41
904744	110
905121	29 thru 230
905123	29, 31, 33
905126	110 thru 199
905129	107
905347	173
905356	63
905357	94, 95
905358	87, 109, 190
905360	193, 215
905365	39
905655	53 thru 255
905656	263
905657	57 thru 265
905658	226
905660	109
905662	101, 234
905665	99, 146
905666	99
905667	189, 191
905668	109, 244
906652	60, 203, 217
906692	109, 264
906957	70, 246
906961	130
906963	145
906964	221 thru 263
907154	221, 223
907618	236
907830	155, 156
907859	55
909055	156
909367	155, 156
910001	81, 83
910002	70, 72
910006	123
910007	191, 259, 261
910014	191
910024	161
910129	15, 49
910136	89, 145
910137	259, 261
910141	145
910149	200
910156	170
910160	257
910161	59, 89
910167	59, 78
910173	72
910179	130
910181	123, 127
910196	160
910197	222
910211	123
910213	87, 222
910230	9 thru 75
910243	70, 255
910244	251 thru 261
910245	83 thru 211
910250	79
910251	156, 225
910257	167 thru 243
910260	160
910267	70
910268	51 thru 96
910271	209, 211, 255
910335	29 thru 218
910388	139
910543	146
910847	121
910863	254
910867	113
910868	49
910876	193, 217, 256
910882	121
910906	53
910914	107, 110
910916	159 thru 243
910922	40
910939	214
910943	49
910947	59
910967	109 thru 214
910274	65
910978	15 thru 59
910980	71
911018	87, 222
911024	54 thru 265
911025	37 thru 250
911026	46 thru 269
911027	203
911028	7 thru 261
911029	130 thru 269
911030	139 thru 244
911032	243
911034	124
911035	49 thru 233
911036	109 thru 238
911038	169 thru 244
911040	43 thru 255
911041	9 thru 263
911042	127, 163, 217
911043	43 thru 251
911044	232, 233
911045	245
911046	233
911047	169, 239, 241
911048	232, 234
911049	92 thru 241
911051	103, 159, 160
911052	152
911053	254
911054	230
911061	170
911076	130
911081	9, 72
911100	109 thru 261
911101	254
911114	152 thru 255
911115	9 thru 264
911159	115, 152, 191
911168	43
911174	173 thru 244
911179	183, 187
911195	49
911198	15 thru 53
911201	18 thru 245
911207	175
911208	40, 43, 59
911227	169, 175
911228	186
911229	244
911230	181, 185
911232	238
911233	191
911238	182, 185, 244
911258	175
911259	175
911273	193 thru 246
911279	173
911300	247
911309	59
911313	49
911325	72
911331	217
911435	87, 222
911437	87, 222
911440	121, 146
911446	141
911633	177, 178
911690	129
911752	203
911842	173
911843	161
912064	15, 49, 87
912065	49, 198
912075	139, 269
912112	203, 205
912128	141
912177	153
912181	141
912186	89
912226	96
912251	139, 160
912301	119
912312	191
912319	51
912324	41
912331	139, 159, 160
912367	15, 49, 87
912380	112
912484	139, 267
912485	267
912486	267
912554	267
912588	49, 198
912606	173
912725	117 thru 243
912726	11
912729	209, 221, 236
912738	31, 75, 268
912739	236
912767	183
912768	133
912785	267
912787	267
912789	244, 253, 255
912808	170, 194
912840	103, 121, 135
912841	239, 241
913025	99
913032	96
913037	92
913039	77
913040	77
913041	70
913048	70
913077	175
913097	139, 241
913115	127
913162	221
913177	123
913189	37, 87, 89
913206	92
913220	81
913243	59
913256	101
913257	59
913299	69
913464	91
913468	121
913469	183
913470	118 thru 261
913471	124
913472	118
913474	87, 89, 145
913498	89
913527	169
913528	107
913535	146
913536	145
913593	226, 227
913607	43
913636	37 thru 218
913648	178
913676	89
913729	193
913830	214 thru 263
913889	70
913922	41
914094	15
914106	254
914330	43
914373	207, 211
914375	51, 53
914376	43, 51, 53
914378	51, 53
914379	89
914382	232, 234
914453	53
914465	109, 183, 245
914479	71
914480	217
914484	177
914590	64
914666	256
914668	124
914724	163, 169
914768	139
914814	181, 207
914836	101
914932	143

NUMERICAL INDEX

Part No.	Page
914933	143
914966	143
914967	143
915000	101
915002	159
915017	264
915018	139
915273	103, 167, 182
915275	109 thru 193
915279	49, 198
915291	59
915292	59
915432	55, 57, 95
915433	54 thru 101
915476	72
915486	91
915488	91
915490	91
915492	91
915515	159
915556	91
915557	91
915633	69
915803	236
915884	143
1115485	96
1556410	96
1879753	96
2007105	101
2190595	19
2225347	64
2225351	64
2225353	64
2225354	64
2225355	64
3222369	230
3222484	99
3222489	99
3222555	99, 104, 247
3222767	99
3223668	99
3224176	99
5076204	96
5150013	23
5150014	9
5150020	9, 87, 89
5150023	9
5150024	9
5150025	21
5150026	21
5150027	21
5150032	39
5150041	23
5150043	23
5150044	23
5150050	23
5150052	23
5150054	11
5150055	11
5150057	11
5150059	11
5150060	11
5150071	13
5150087	21
5150089	21
5150094	19
5150095	19
5150115	14
5150116	14
5150129	29
5150130	9
5150140	19
5150144	104
5150147	41, 77
5150154	35, 37
5150155	35, 37
5150174	18
5150175	18
5150181	13
5150182	101
5150184	101
5150187	101
5150188	101
5150190	101
5150191	101
5150192	101
5150193	61, 101
5150194	46
5150195	47
5150197	46, 47
5150198	46, 47
5150199	61
5150218	77
5150220	77
5150222	78
5150233	78
5150234	78
5150235	77
5150236	77
5150238	77
5150246	69, 75
5150249	67
5150250	67
5150251	67
5150260	65
5150263	65
5150264	65
5150265	65
5150266	70
5150268	23
5150269	23, 69
5150271	17
5150273	26
5150274	26
5150277	11
5150279	75
5150281	75
5150286	75
5150289	25
5150290	25
5150291	25
5150292	25
5150298	25
5150299	25
5150300	25
5150301	25
5150302	25
5150303	25
5150304	25
5150305	25
5150310	25
5150315	25
5150318	25
5150319	25
5150322	25
5150324	25
5150325	25
5150327	23
5150328	23
5150330	23
5150333	23
5150334	29
5150345	75
5150346	75
5150347	75
5150348	77
5150349	77
5150350	77
5150361	99
5150362	99
5150372	78
5150379	21
5150380	21
5150381	23
5150394	70
5150410	13
5150433	77
5150438	101
5150454	17
5150458	17
5150464	37
5150516	17
5150522	75
5150557	73
5150558	73
5150559	73
5150560	73
5150566	69
5150568	69
5150572	9
5150779	81, 83
5150780	83
5150846	18
5150855	78
5150856	78
5150863	78
5150884	69
5150889	71
5150890	70
5150897	69
5150898	70
5150900	72
5150906	69
5150911	69
5150913	70
5150941	65, 70
5150942	69, 71
5150943	70
5150946	71
5150990	65
5150994	65
5155114	75
5151121	69
5151122	9
5151154	9
5151159	23
5151187	29
5151189	104
5151190	37, 104
5151197	29
5151206	29
5151218	29
5151265	23
5151266	23
5151305	37
5151350	19
5151370	31, 33, 39
5151373	77
5151374	41
5151392	18
5151414	9
5151420	18
5151456	35, 37
5151461	39
5151576	11, 13
5151601	25
5151907	92
5151908	92
5151909	92
5151910	87 thru 92
5151920	92
5151921	96, 263
5151922	87
5151983	21
5151986	21
5152148	37
5152149	9
5152239	72
5152381	37
5152528	14
5152613	29, 31, 33
5152617	29
5152674	92
5152707	29
5152719	29
5152720	29
5152721	29
5152779	96
5152797	29
5152804	75
5152814	26
5152878	13
5152904	35, 37
5152909	92
5152932	72
5152939	71
5152938	71
5152940	71
5152941	72
5152942	71
5152944	72
5152962	72
5152992	29
5152993	29
5152994	29
5153000	21
5153001	21
5153002	72
5153003	72
5153004	72
5153007	72
5153046	35
5153059	71
5153060	71
5153117	9
5153139	9, 87, 89
5153147	31, 33
5153154	31, 33
5153229	35
5153238	104
5153247	29, 31, 33
5153294	35
5153299	31, 33
5153301	31
5153309	31, 33
5153310	31, 33
5153313	31, 35, 39
5153347	75
5153357	92
5153358	91, 92
5153372	13
5153373	18
5153383	87, 89
5153385	96
5153388	96
5153389	96
5153390	96
5153395	96
5153407	71
5153443	101
5153474	101
5153553	29
5153560	101
5153562	19
5153590	19
5153592	19

NUMERICAL INDEX

Part No.	Page
5153615	29
5153616	29
5153618	65
5153623	18
5153626	29
5153627	29, 31, 35
5153682	101
5153713	18
5153779	17
5153847	17
5153866	71
5153874	29
5153904	72
5153914	21
5153938	78
5153951	21
5153972	39
5154066	87, 89
5154077	46
5154078	47
5154082	9
5154104	72
5154125	96
5154199	39
5154215	35, 37
5154319	9
5154332	19
5154356	65
5154360	19
5154398	78
5154399	78
5154400	78
5154401	61
5154405	70
5154422	70
5154435	70
5154438	70
5154457	29, 31, 35
5154501	69
5154502	69
5154504	14
5154506	14
5154507	14
5154508	29
5154509	29, 31, 35
5154510	29
5154542	41
5154638	75
5154639	75
5154669	11
5155026	29
5155765	31, 33
5155815	99
5155816	99, 104
5155865	77
5156498	41, 77
5156520	31
5156521	31, 33
5156528	31, 33
5156532	31, 33
5156629	72
5156683	31, 33
5156768	37
5156769	37
5156782	37
5156815	39
5156816	39
5156819	39
5156955	31, 33
5157160	99
5157192	23
5157194	23
5157199	77
5157412	104
5157473	39
5157551	110
5157587	39
5158071	87, 89
5158145	77
5158146	77
5158432	69, 71
5158578	39
5158594	96
5158671	21
5158672	21
5158674	9
5158901	75
5158904	69
5158917	21
5158922	21
5159060	101
5159080	70
5159353	17
5159384	39
5159388	39
5159423	35
5159469	11
5159493	11
5159837	25
5160037	23
5160303	19
5160542	17
5160971	77
5161677	65
5163097	69
5163514	70
5165221	69
5165781	69
5165783	69
5166649	31, 33
5166650	31, 33
5166694	31
5166821	31, 33
5166840	31, 33
5167714	11, 26
5167727	75
5167750	61
5167813	31, 33
5168158	31
5168175	41
5168176	41
5168178	14
5169195	33
5169197	33
5169343	17
5171159	61 thru 101
5171520	19
5171524	19
5171784	72
5172552	72
5172734	21
5172740	21
5172818	101
5172820	101
5172864	75
5172865	75
5172867	75
5172868	75
5172870	75
5172871	75
5172874	23
5172875	23
5172974	101
5172976	101
5173320	75
5173330	17
5173362	78
5173363	78
5173364	78
5173365	78
5173366	78
5173695	75
5173964	72
5174131	31, 35
5174150	14
5174412	71
5174425	71
5174429	71
5174438	69
5174440	69
5174447	69
5174448	69
5174687	14
5174690	14
5174693	14
5174820	104
5174857	101
5175667	61
5175680	33
5175932	13
5175944	33
5175982	33
5176035	33
5176119	29, 31, 33
5176457	21
5176458	21
5176557	71
5176995	26
5176996	26
5176998	26
5177083	72
5177186	19
5177528	17
5177709	11
5177769	21
5177772	37
5177773	37
5177777	37
5177778	37
5177798	11, 13
5178244	37
5178319	101
5178406	23
5178540	25
5178590	25
5178850	62
5178997	9
5178998	9
5179017	78
5179605	101
5179613	72
5179630	17
5179631	17
5179632	19
5179633	19
5179836	19
5179971	11
5179999	26
5182941	17
5184215	17
5190348	25
5190542	65
5190543	65
5190948	13
5191842	63
5191843	63
5191844	63
5191845	63
5191849	63
5191850	63
5191851	63
5191853	63
5191854	63
5191855	63
5191937	274
5191938	63
5192226	19
5192232	21
5192234	78
5192248	274
5192250	63
5192279	63
5192379	9
5192380	9
5192438	77
5192439	77
5192441	274
5192496	18
5192497	19
5192504	64
5192505	64
5192506	64
5192508	64
5192509	64
5192568	11
5192569	26
5192587	21
5192589	21
5192590	21
5192649	62
5192717	25
5192718	25
5192743	274
5192747	274
5192751	274
5192775	18
5192776	18
5192786	64
5192793	77
5192794	77
5192813	64
5192874	275
5192875	275
5192876	275
5192877	275
5192878	275
5192879	17
5192880	17
5192881	19
5192882	19
5192883	17
5192884	17
5192885	19
5192886	19
5192887	17
5192888	17
5192889	19
5192890	19
5192891	17
5192892	17
5192893	19
5192894	19
5192895	275
5192896	275
5192897	275
5192898	275
5192899	275
5192918	23
5192919	23
5226029	62
5226186	67
5226394	67
5226396	67
5226397	67
5226400	67
5226409	67

NUMERICAL INDEX

Part No.	Page
5226411	67
5226413	67
5226414	67
5226415	67
5226560	67
5226563	67
5226564	67
5226565	67
5226567	67
5226570	67
5226710	67
5226717	67
5226719	67
5226723	67
5226913	67
5227210	67
5227276	67
5227287	67
5227318	67
5227321	67
5227323	67
5227324	275
5227931	67
5227936	67
5228013	67
5230007	62
5230010	62
5230013	62
5230014	62
5230015	62
5230016	62
5230018	62
5230020	62
5230021	62
5230022	62
5230029	62
5230031	61
5230050	62
5230054	62
7450082	26
7450168	77
8501327	35, 37
8501328	37

LATE ADDITIONS

028979	13
058022	120B
066986	141
066988	134
066990	133
074688	23A
074689	23B
074698	69
074699	70
074729	143
074735	143
074738	143
075275	120A
075276	120A
075277	120A
075278	120A
075279	120A
075280	120A
075281	120A
075282	120A
075283	120A
075284	120A
075285	120A
075286	120A
075287	120B
075288	120B
075289	120B
075290	120B
075666	141
075767	134
075768	275
076097	275
076659	120B
076660	120B
076942	120B
077299	120B
077300	120B
077407	120B
078040	233
078135	120B
078137	120B
078174	120A
078194	120A
602667	173
604134	177
5155114	75
5170881	23A
5172346	21
5174818	104
5183268	69
5183305	23A
5183329	23
5183330	23A
5183476	23A
5183584	21
5183948	23A
5184171	21
5184301	23A
5184484	11
5184577	13
5185326	25
5185342	23
5185343	23
5193107	9
5193108	9
5193116	23B
5193117	23B
5193125	21
5193197	25
5193239	101, 275
8518912	27
8518916	35, 37