LeTOURNEAU

TRADE MARK REG. U. S. PAT. OFF.

EQUIPMENT

MODEL D TOURNAPULL*
WITH
MODEL E4 CARRYALL*

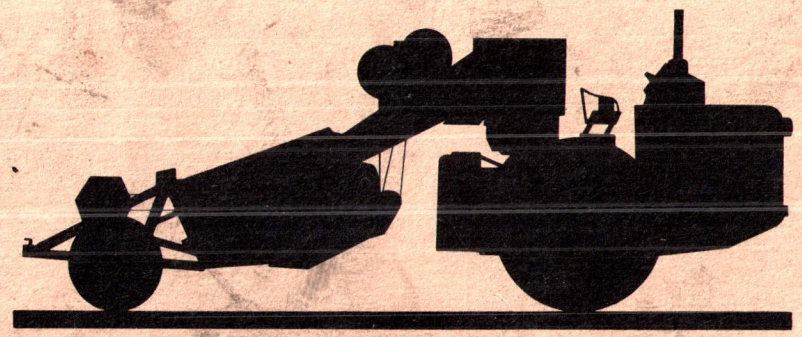

PARTS CATALOG

FORM PC 310 R. G. LeTOURNEAU, INC. TOCCOA, GA.

LeTOURNEAU-WESTINGHOUSE COMPANY

INDEX

Description	Page No.
Air Brake Assembly	62 & 63
Air Cleaner	24
Air Compressor	31 & 32
Air Tank	37
Brush Assembly	49
Cable Threading Diagram	92
Carburetor	16, 17, 18
Case Group	33, 34, 35
Clutch Assembly (Transmission)	64 & 65
Clutch Guard & Battery Case	45
Cockpit & Hood	40
Contactors (Switch Panel)	51 & 52
Cranking Motor	25 & 26
Differential Assembly	58
Distributor	30
Exhaust Manifold	39
Final Drive Axles	60 & 61
Final Drive Pinions	59
Fuel Pump	19 & 20
Fuel Tank	38
Gear Box Assembly (Scraper)	83 & 84
Gear Box Assembly (Steering)	56 & 57
Generator "AC"	47 & 48
Generator, Engine "DC"	27 & 28
Governor	21 & 22
Instrument Panel	44
Oil Filter	23
Oil Pump (For Final Drive)	75 & 76
Parking Brake Assembly	66 & 67
Parking Brake Air Valve	46
Piping Diagram	77 & 78
Radiator	36
Scraper Apron	87
Scraper Main Body	85
Scraper Light	90
Scraper Motor Groups	80, 81, 82
Scraper Tailgate	88
Scraper Wheels	89
Scraper Yoke	86
Seat Assembly	41
Steering Motor Group	55
Steering Trunnion	53 & 54
Switch Panel Group	50
Tool Group	91
Tournapull Wheels	79
Transmission Compound Shaft Assembly	69
Transmission Control Valve	43
Transmission Engine Shaft Assembly	68
Transmission High Forward Shaft Assy.	74
Transmission Low Forward Shaft Assy.	70
Transmission Low Reverse Shaft Assy.	71 & 72
Transmission Output Shaft Assembly	73
Treadle Air Valve	42
Voltage Regulator	29

NOTE: See Buda Engine Co. Parts Manual for Engine Parts not shown in this Book.

Item No.	Part No.	Description	Quantity
1	SD-5802	Carburetor Assembly	1
2	SD-6758	Gasket	2
3	SD-5916	Stud	2
4	SD-6759	Nut	2
5	SD-6756	Lockwasher	2
6	SD-6761	Fuel Line Assembly	1
7	SD-6762	Elbow	2
8	SD-6765	Screw	1
9	SD-6766	Plug	1

IF CARBURETOR HAS SPACER USE MODIFICATION INFORMATION LISTED BELOW

CARBURETOR MODIFICATION

Part No.	Name	Quantity
R-2779	Throttle Spring	1
DC-9666	TREADLE TO THROTTLE ROD ASSEMBLY	1
DC-9662	Carburetor Spacer	1
DC-9667	Throttle Arm Machining	1
DD-53	Hand Throttle Lever	1
H-8500	10-32x1/4 Rnd. Hd. Machine Screw	1
D-4097	1/16x1 Cotter Key	1
DC-9699	Throttle Wire Anchor	1
DC-9698	Throttle Control Anchor	1
DC-8164	Clamp for 1/4 O.D. Tubing	1
DC-9663	Carburetor Stud	2

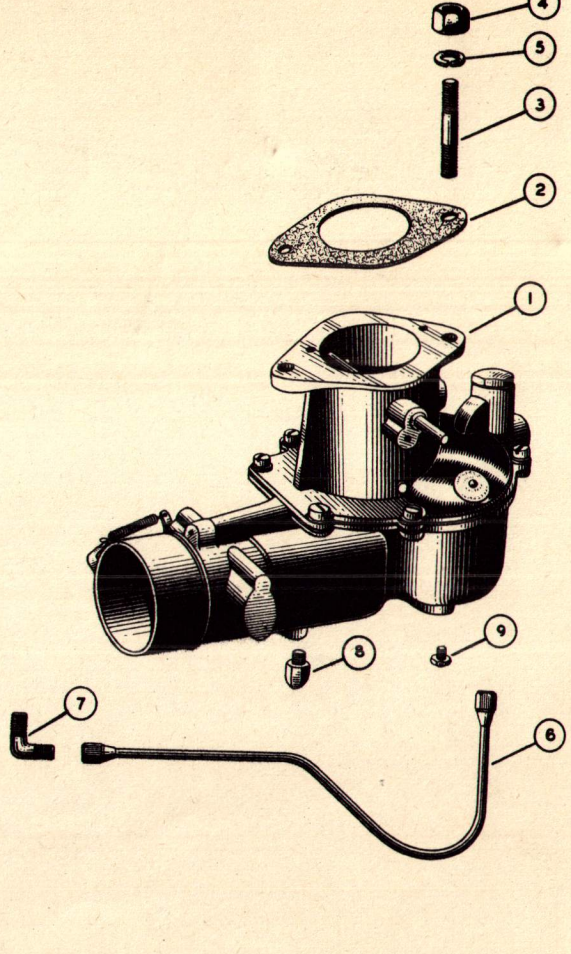

CARBURETOR ASSEMBLY

CARBURETOR ASSEMBLY

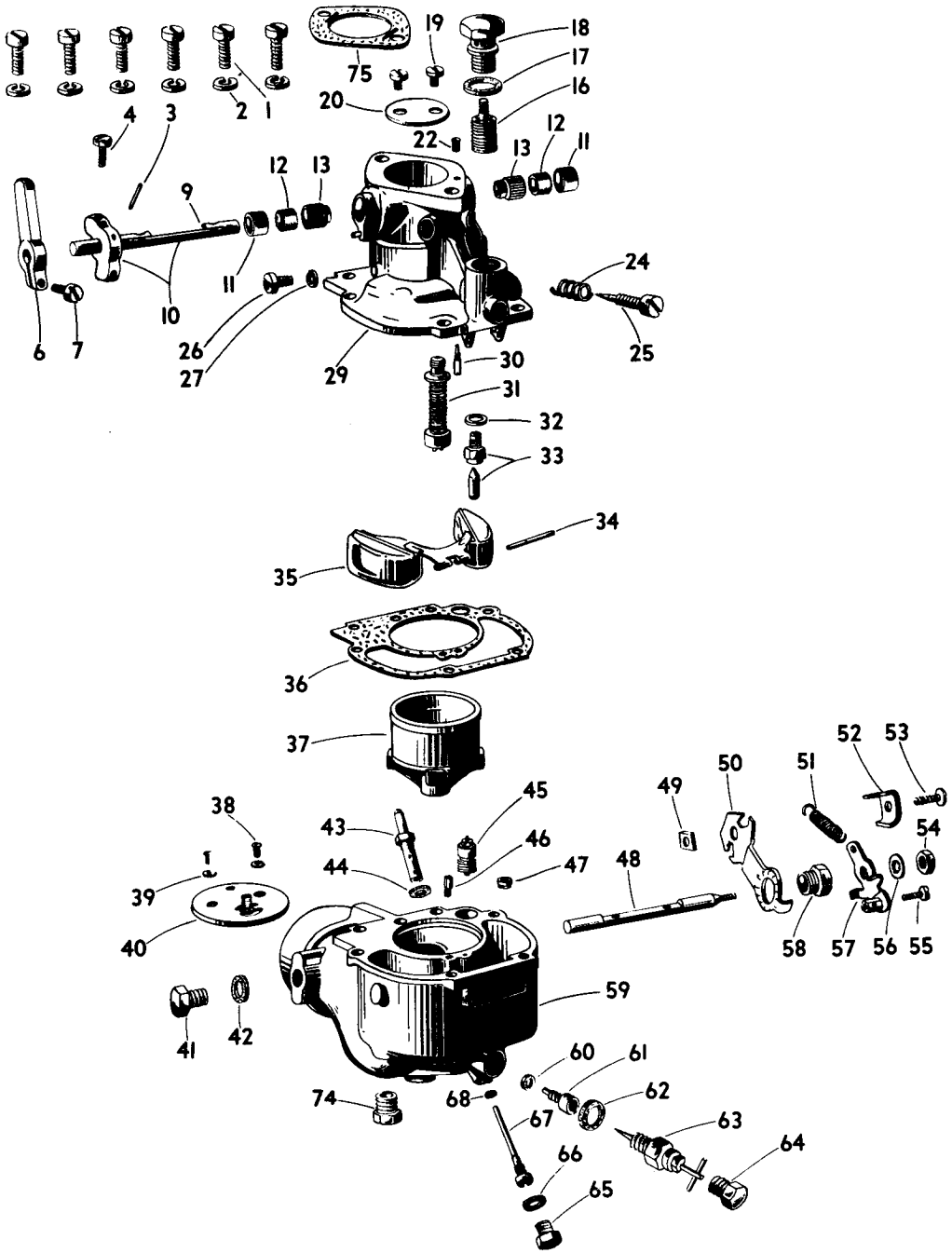

Item No.	Part No.	Description	Quantity
None	SD-8057	Carburetor Assembly	1
1	SD-8058	Screw	6
2	SD-8059	Lockwasher	6
3	SD-8060	Taper Pin	1
4	SD-8061	Screw	1
6	SD-8062	Lever	1
7	SD-8063	Shaft	1
9	SD-8064	Throttle Shaft	1
10	SD-8065	Shaft & Stop Lever	1
11	SD-8066	Retainer	2
12	SD-8067	Washer	2
13	SD-8068	Bushing	2
16	SD-8069	Filter Element	1
17	SD-8070	Fibre Washer	1
18	SD-8071	Filter Head	1
19	SD-8072	Screw	2
20	SD-8073	Throttle Plate	1
22	SD-8074	Vacum Channel Screw	1
24	SD-8075	Spring	1
25	SD-8076	Idle Adjusting Needle	1
26	SD-8077	Screw	1
27	SD-8078	Lockwasher	1
29	SD-8079	Throttle Body	1
30	SD-8080	Idling Jet	1
31	SD-8081	Vacum Pump	1
32	SD-8082	Fibre Washer	1
33	SD-8083	Valve & Seat	1
34	SD-8084	Float Axle	1
35	SD-8085	Float	1
36	SD-8086	Gasket	1
37	SD-8087	Venturi	1
38	SD-8088	Screw	2

Item No.	Part No.	Description	Quantity
39	SD-8089	Lockwasher	2
40	SD-8090	Choke Plate	1
41	SD-8091	Plug	1
42	SD-8082	Fibre Washer	1
43	SD-8092	Discharge Jet	1
44	SD-8093	Fibre Washer	1
45	SD-8094	Power Jet Valve	1
46	SD-8095	Well Vent Jet	1
47	SD-8096	Pump Check Valve	1
48	SD-8097	Choke Shaft	1
49	SD-8098	Nut	1
50	SD-8099	Choke Bracket	1
51	SD-8250	Lever Return Spring	1
52	SD-8251	Tube Clamp	1
53	SD-8252	Tube Clamp Screw	1
54	SD-8253	Choke Shaft Nut	1
55	SD-8254	Swivel Screw	1
56	SD-8255	Lockwasher	1
57	SD-8256	Choke Lever	1
58	SD-8257	Screw	1
59	SD-8258	Fuel Bowl	1
60	SD-8259	Fibre Washer	1
61	SD-8260	Main Jet	1
62	SD-8261	Fibre Washer	1
63	SD-8262	Main Jet Adjustment	1
65	SD-8263	Plug	1
66	SD-8082	Fibre Washer	1
67	SD-8264	Power & Accelerating	1
68	SD-8265	Fibre Washer	1
74	SD-8266	Drain Plug	1
75	SD-8267	Flange Gasket (Not in Kit)	1
None	SD-8268	Gasket Kit	1

CARBURETOR ASSEMBLY

ALWAYS GIVE SERIAL NUMBER WHEN ORDERING PARTS

FUEL PUMP ASSEMBLY

Item No.	Part No.	Description	Quantity
1	SD-5798	Fuel Pump Assembly	1
2	SD-6768	Adaptor	1
3	SD-6769	Capscrew	4
4	SD-6770	Lockwasher	6
5	SD-6771	Gasket	1
6	SD-6772	Gasket	1
7	SD-6773	Capscrew	2

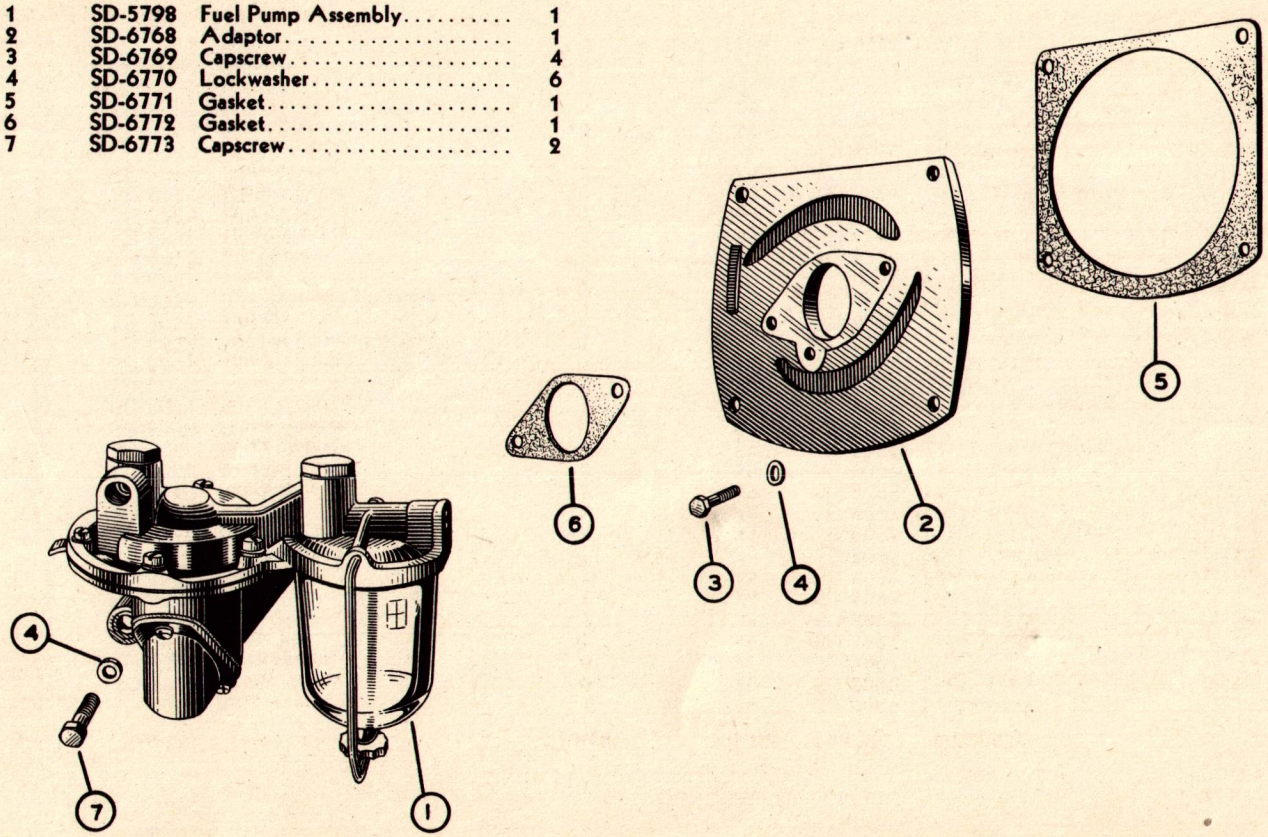

NOTE:
1 REPAIR KIT(WITHOUT ROCKER ARM)----SD-8316
1 DIAPHRAM REPAIR KIT----------SD-8317

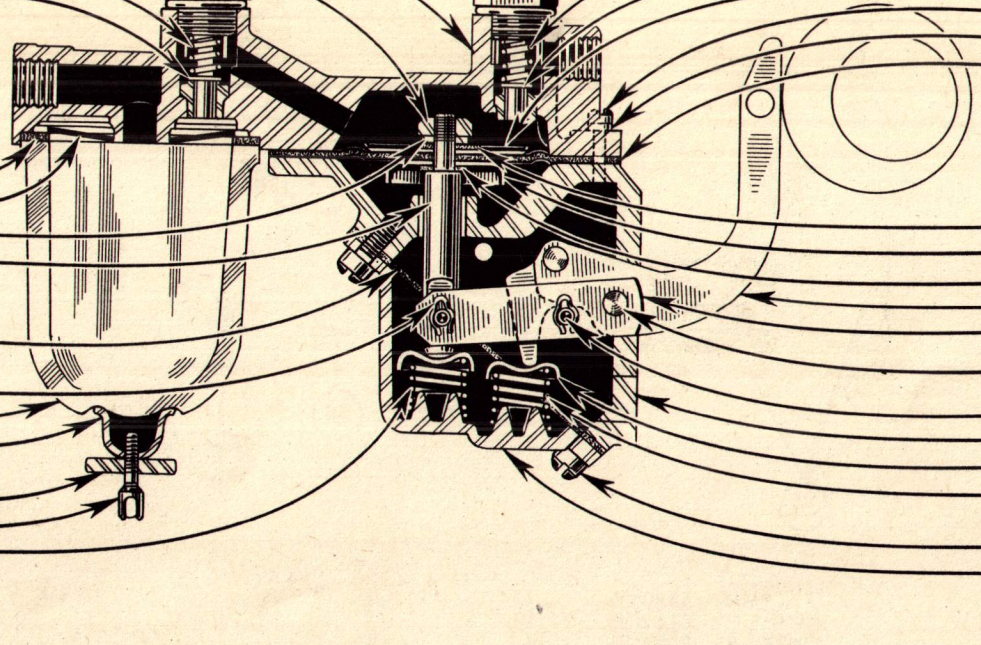

FUEL PUMP ASSEMBLY--SD-8334

GOVERNOR ASSEMBLY

Item No.	Part No.	Description	Quantity
1	SD-5799	Governor Assembly	1
2	SD-6812	Weight	2
3	SD-5800	Spring	1
4	SD-6814	Lever	1
5	SD-6815	Gear	1
6	SD-6816	Pin	1
None	SD-6817	Link Assembly	1
7	SD-6818	Rod	1
8	SD-6819	Ball Joint	1
9	SD-6820	Ball Joint	1
10	SD-6821	Nut	3
11	SD-6822	Washer	2
12	SD-6823	Oil Line Assembly	1
13	SD-6764	Elbow	2
14	SD-6771	Gasket	1
15	SD-6824	Capscrew	4
16	SD-6770	Lockwasher	4
17	SD-6825	Valve Box	1

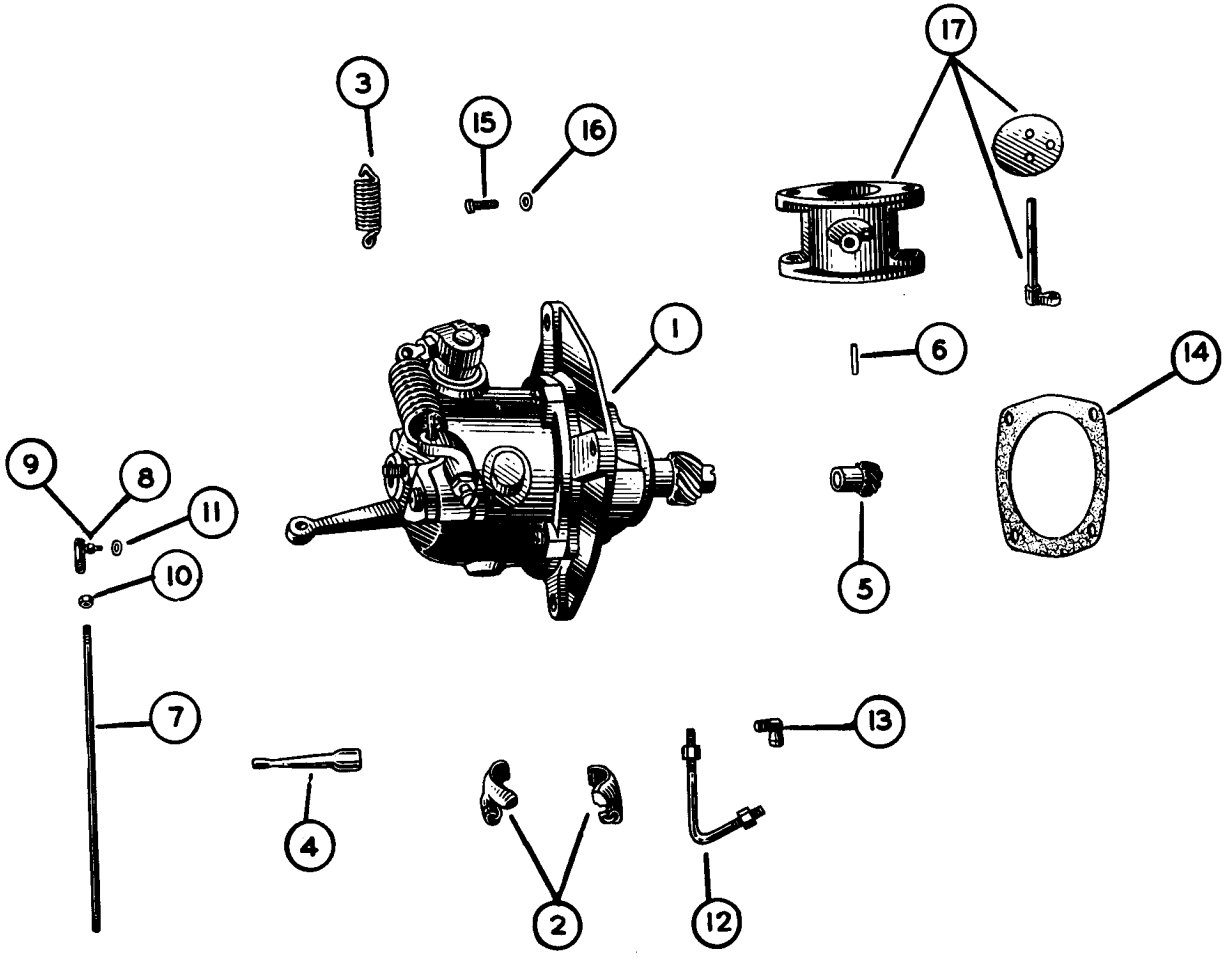

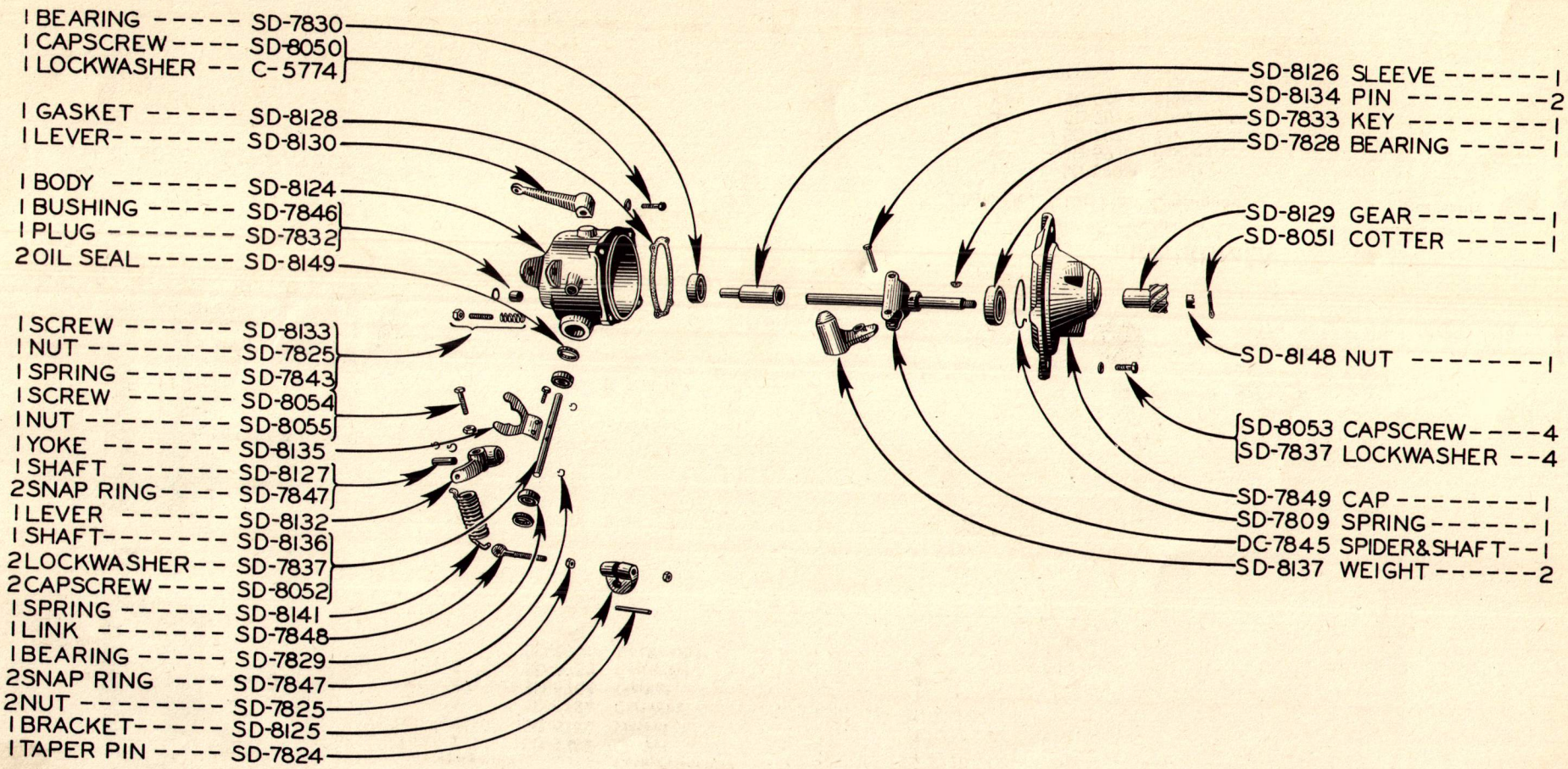

GOVERNOR ASSEMBLY--SD-7844

ALWAYS GIVE SERIAL NUMBER WHEN ORDERING PARTS.

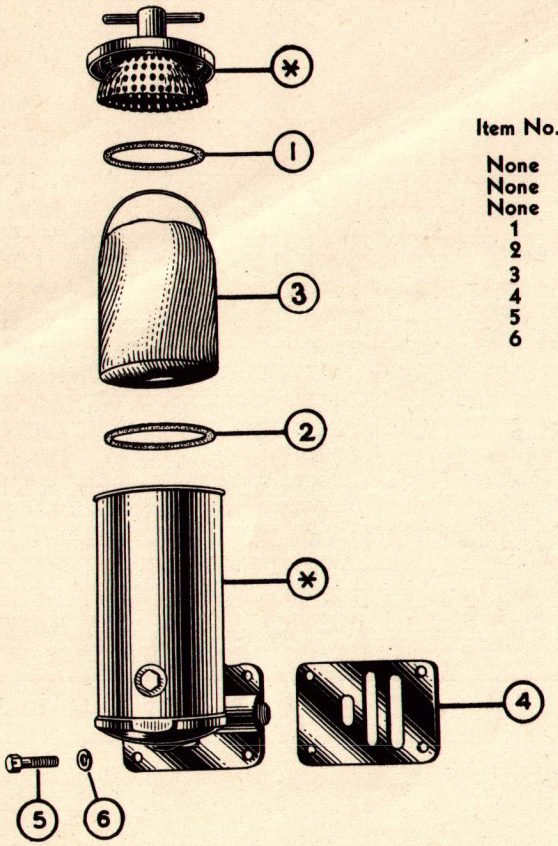

OIL FILTER ASSEMBLY

Item No.	Part No.	Description	Quantity
None	SD-6750	Oil Filter Assembly	1
None	.....	Cover Assembly	1
None	.....	Case Assembly	1
1	SD-5785	Gasket	1
2	SD-6752	Gasket	1
3	SD-5784	Cartridge	1
4	SD-6754	Gasket	1
5	SD-6755	Capscrew	4
6	SD-6756	Lockwasher	4

* NOT SOLD SEPARATELY

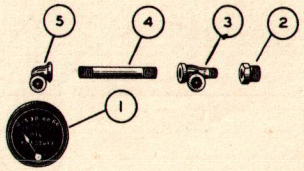

INSTRUMENTS

Item No.	Part No.	Description	Quantity
1	SD-5803	Gauge	1
2	SD-6976	Bushing	1
3	SD-7011	Tee	1
4	SD-7012	Nipple	1
5	SD-7013	Elbow	1

Item No.	Part No.	Description	Quantity
None	SD-6956	Air Cleaner Assembly	1
1	SD-6957	Wing nut	1
2	SD-6958	Washer	1
3	SD-6959	Shell	1
4	SD-6960	Screen (Outside)	1
5	SD-6961	Screen (Inside)	1
6	SD-6962	Body and Tube Assembly	1
7	SD-6963	Body Assembly	1
8	SD-6964	Eyebolt	1
9	SD-6965	Nut	1
10	SD-6966	Gasket	1
11	SD-6967	Retainer	1
12	SD-6968	Baffle	1
13	SD-6969	Oil Cup	1

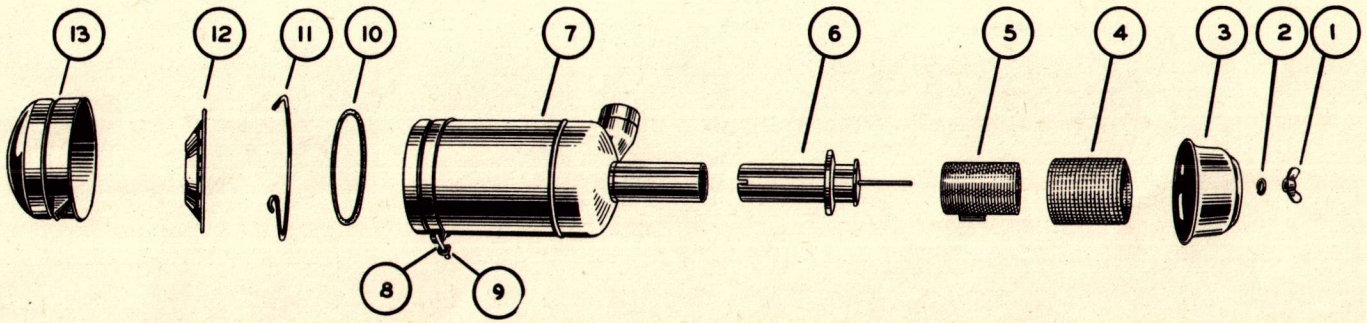

AIR CLEANER ASSEMBLY

CRANKING MOTOR--EXPLODED

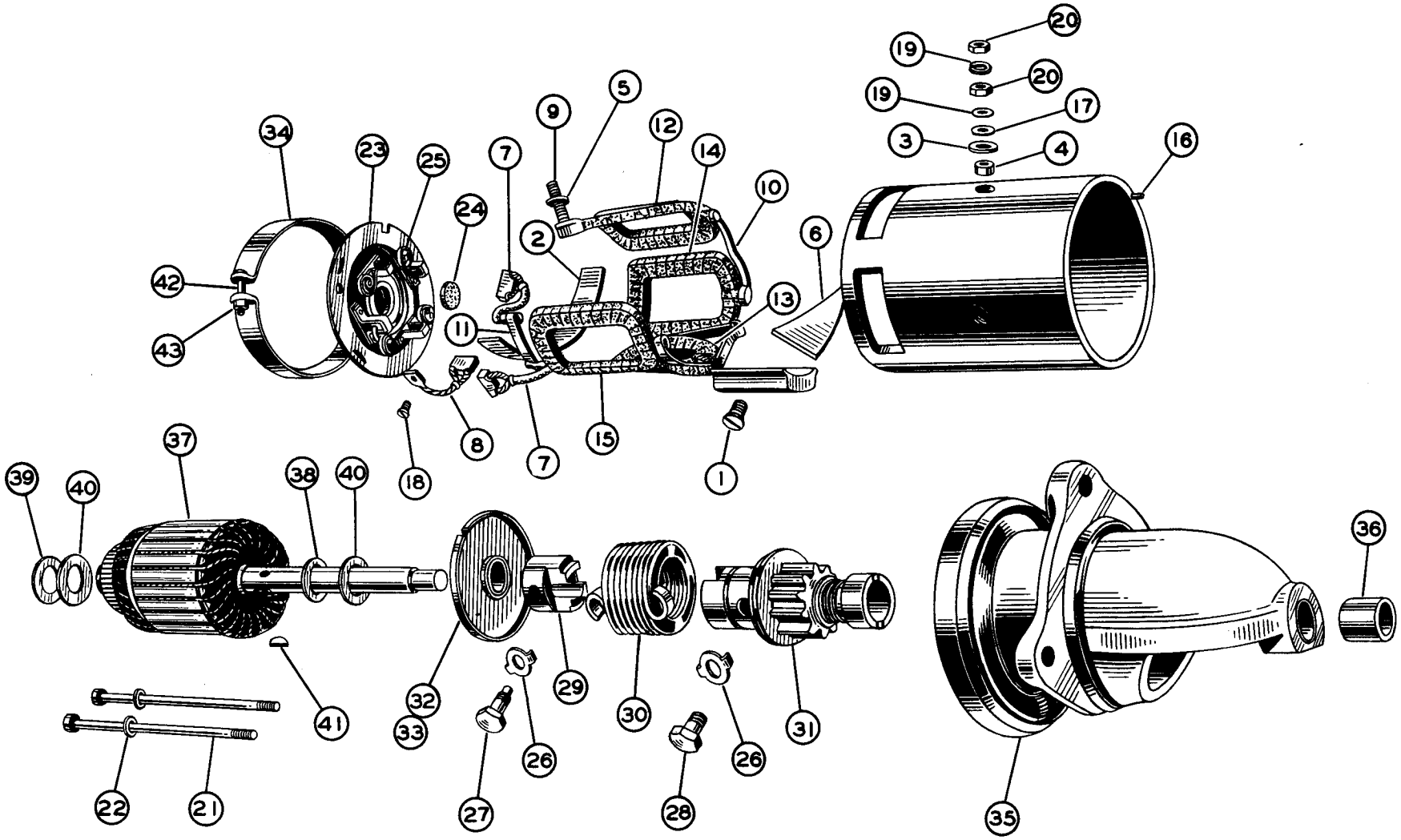

Item No.	Part No.	Description	Quantity
None	SD-8595	Cranking Motor Assembly	1
None	SD-8553	Frame & Field Assembly	1
1	SD-8554	Pole Shoe Screw	4
2	SD-8555	Field Connection Insulation	1
3	DC-3540	Insulating Washer	1
4	SD-8557	Insulating Bushing	1
5	SD-8558	Insulating Bushing	1
6	SD-8559	Field Connedtion Insulation	1
7	SD-8560	Insulated Brush	2
8	SD-8561	Grounded Brush	2
9	SD-8562	Terminal Stud	1
10	SD-8563	Field Coil Connector	2
11	SD-8564	Insulated Brush Connector	1
12	SD-8565	Field Coil	1
13	SD-8566	Field Coil	1
14	SD-8567	Field Coil	1
15	SD-8568	Field Coil	1
16	SD-8569	Dowel Pin	2
17	DC-3544	Washer	1
18	SD-8571	Brush Ground Screw	2
19	SD-8572	Terminal Stud Lockwasher	2
20	SD-8573	Terminal Stud Nut	2
21	SD-8574	Thru Bolt	2
22	C-5774	Thru Bolt Lockwasher	2

Item No.	Part No.	Description	Quantity
23	SD-8575	Commutator End Head Assembly	1
24	SD-8576	Felt	1
25	DC-3660	Brush Spring	4
None	SD-8583	Bendix Drive Assembly	1
26	DC-3531	Lockwasher	2
27	SD-8585	Head Spring Screw	1
28	SD-8586	Shaft Spring Screw	1
None	DC-3532	Compression Sleeve	1
29	DC-3533	Driving Head	1
30	SD-8589	Drive Spring	1
None	DC-3537	Take Up Ring	1
31	SD-8591	Shaft & Pinion	1
32	DC-3522	Intermediate Brg. Ass'y	1
33	DC-3539	Absorbent Bronze Bearing	1
34	SD-8594	Cover Band	1
35	SD-8551	Pinion Housing Assembly	1
None	DC-3633	Dowel Pin	1
36	DC-3539	Absorbent Bronze Bearing	1
37	SD-8579	Armature Assembly	1
38	SD-8580	Brg. Thrust Spacer	1
39	SD-8578	Armature Thrust Washer	1
40	DC-3541	Armature Thrust Washer	2
41	DC-3666	Woodruff Key	1
42	SD-8570	Cover Band Screw	1
43	SD-8550	Cover Band Screw Nut	1
None	DC-9704	Solenoid Switch (Not Shown)	1

CRANKING MOTOR ASS'Y.

"DC" GENERATOR — EXPLODED

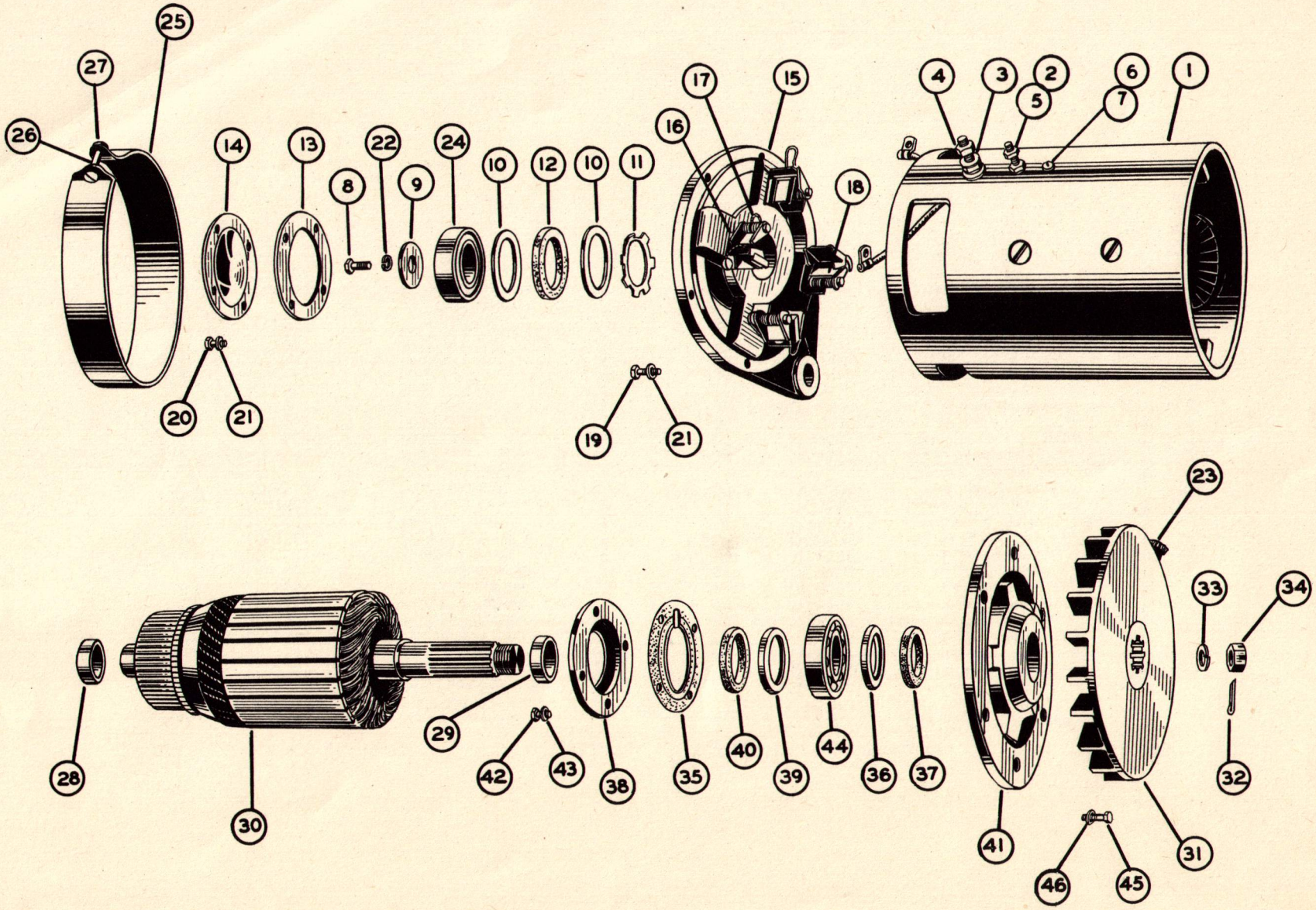

Item No.	Part No.	Description	Quantity
None	SD-8646	Generator Assembly	1
1	SD-8790	Frame & Field Assembly	1
None	SD-8791	Condenser	2
None	SD-8792	Condenser Mounting Screw	2
2	SD-8542	Terminal Stud Lockwasher	1
3	DC-3656	Armature Terminal Lockwasher	1
4	SD-8573	Terminal Stud Nut	1
5	SD-8793	Terminal Stud Nut	1
6	SD-8542	Ground Screw Lockwasher	1
7	SD-8539	Ground Screw	1
8	SD-8794	Bearing Retaining Screw	1
9	SD-8795	Bearing Retaining Washer	1
10	SD-8796	Felt Retaining Washer	2
11	SD-8797	Spring Washer	1
12	SD-8798	Felt Washer	1
13	SD-8799	Cover Gasket	1
14	SD-8800	Commutator End Cover	1
15	SD-8801	Commutator End Hea J Ass'y	1
16	SD-8802	Brush Arm	4
17	SD-8803	Brush Spring	4
18	SD-8804	Brush	4
19	SD-8805	Head Attaching Screw	6
20	CC-5977	Cover Attaching Screw	4
None	SD-8806	Brush Head Screw Lockwasher	4
21	SD-8542	Cover & Head Screw Lockwasher	10
22	C-5774	Bearing Retaining Screw Lockwasher	1
None	DC-3830	Brush Lead Screw	4

Item No.	Part No.	Description	Quantity
23	DC-3841	Hinge Top Oiler	2
24	SD-8808	Ball Bearing	1
25	SD-8826	Cover Board	1
26	SD-8827	Cover Band Screw	1
27	SD-8824	Cover Band Screw Nut	1
28	SD-8809	Armature Shaft Spacer	1
None	SD-8810	Armature Shaft Spacer	1
29	SD-8811	Armature Shaft Spacer	1
30	SD-8812	Armature	1
31	SD-8813	Ventilating Fan	1
32	SD-8814	Cotter	1
33	C-1541	Armature Shaft Lockwasher	1
34	SD-8815	Armature Shaft Nut	1
None	SD-8816	Drive End Head Assembly	1
35	SD-8817	Bearing Retainer Gasket	1
36	SD-8818	Felt Retainer	1
37	SD-8819	Felt Washer	1
None	SD-8820	Bearing Retainer Ass'y	1
38	SD-8821	Bearing Retainer	1
39	SD-8818	Felt Retainer	1
40	SD-8819	Felt Washer	1
41	SD-8822	Head	1
42	CC-5977	Bearing Retainer Screw	4
43	SD-8542	Retaining Screw Lockwasher	4
44	SD-8823	Ball Bearing	1
45	SD-8805	Drive End Attaching Screw	6
46	SD-8825	Attaching Screw Lockwasher	6

GENERATOR ASS'Y.

VOLTAGE REGULATOR ASSY. SD-8544

Part No.	Description	Quantity
SD-8500	Base, Insulation	1
SD-8501	Base, Mounting	1
SD-8502	Bracket, Resistor Mtg. C.R. Core	1
SD-8503	Coil Assy., Current Regulator	1
SD-8504	Armature	1
SD-8505	Bracket, Air Gap Adjusting	1
SD-8506	Nut, Adjusting	1
SD-8507	Screw, Adjusting	1
DC-3866	Screw, Mtg. Adjusting Brkt.	4
SD-8509	Screw, Mtg., Bridge & Res. Brkt.	2
SD-8510	Spring, Armature	1
DC-3699	Washer, Lock, Adjusting Brkt.	6
SD-4811	Washer, Plain, Adjusting Brkt.	5
SD-8513	Coil Assy., Cutout Relay	1
SD-8514	Armature	1
SD-8515	Contact & Bracket, Stationary	1
SD-8516	Insulation, Stationary Contact Brkt.	1
SD-8516	Insulation, Stationary Contact Brkt.	1
SD-8506	Nut Adjusting	1
SD-8507	Screw, Adjusting	1
SD-8509	Screw, Mntg., Bridge & Contact Brkt.	4
DC-3866	Screw, Mntg.	2
SD-8510	Spring, Armature	1
SD-8518	Washer, Insulating	2
SD-4811	Washer, Plain	4
SD-8520	Coil Assy., Voltage Regulator	1
SD-8521	Armature	1
SD-8505	Bracket, Air Gap Adjusting	1
SD-8506	Nut, Adjusting	—
SD-8507	Screw, Adjusting	1
DC-3866	Screw, Mounting	4
SD-8522	Screw, Mounting	2
SD-8523	Spring, Armature	1
DC-3699	Washer, Lock	6

Part No.	Description	Quantity
SD-4811	Washer, Plain	4
SD-8524	Connector, Series Coil	1
SD-8525	Cover, Regulator	1
SD-8526	Gasket, Cover	1
SD-8527	Lead Assy., Resistor	1
SD-8528	Terminal	2
SD-8529	Lead, V. R. Armature & C. R. Armature	2
SD-8530	Name Plate	1
SD-8531	Nut, Coil Mounting	3
SD-8532	Nut, Cover Holding	2
DC-3801	Nut, Series Connection	1
SD-8534	Plug, Drain, 1/8	1
SD-8535	Resistance, Cargon, Marked 100	1
SD-8536	Resistance, Wire, Marked 175	1
SD-8537	Resistance, Wire, Marked 20	1
SD-8538	Resistance, Wire, Marked 40	1
SD-8539	Screw, Ground (2) Lead Connection (1)	3
CC-5977	Screw, Lead Connection (1), Base Mtg. (6)	7
S-9861	Screw, Lead Connection, Rd. Hd.	1
SD-8540	Screw, Name Plate Attaching	2
DC-3830	Screw, Resistor Attaching	6
CC-5710	Screw, Resistor Attaching	2
SD-8508	Screw, Terminal	3
SD-8512	Seal, Regulator	1
SD-8542	Washer, Lock, Base Mtg. (6) Lead Conn. (4) Grd. Sc. (2)	12
SD-8543	Washer, Lock, Coil Mounting	3
DC-3699	Washer, Lock	8
C-5774	Washer, Lock, Cover Holding	2
DC-3656	Washer, Lcok	3
SC-3117	Washer, Plain	11
C-1546	Washer, Plain	4
SD-4811	Washer, Plain	8
SD-8519	Washer, Rubber	2

Part No.	Description	Quantity
SD-8547	Gear, Tachometer, Driver	1
SD-8548	Gear, Tachometer. Follower	1
SD-8549	Cam & Stop Plate 6 Cyl. R.H.	1
SD-8750	Plate Assembly, Breaker	1
SD-8751	Plate, Breaker	1
SD-8596	Clip, Spring, Contact Arm	1
SD-8597	Screw, Spring Clamp, Hex Head	1
SD-8598	Contact, Breaker	1
SD-8599	Arm Assembly, Breaker	1
SD-8752	Spring	1
SD-8753	Condenser	1
SD-4811	Washer, Plain, Contact Lock Screw No. 8	1
SD-8828	Washer, Plain, Clamp Screw No. 6	1
SD-8754	Screw, Lock, Breaker Contact, Fil. Head	1
SD-8755	Lockwasher, Condenser & Clamp	1
SD-8756	Screw, Condenser Mntg., Fil. Hd.	1
SD-8757	Plate Assembly, Seal	1
SD-8758	Washer, Felt	1
SD-8759	Base Assembly, Dist.	1
SD-8760	Connector, Term. Stud	1
SD-8761	Insulation, Term. Stud, Inner	1
SD-8762	Bushing, Ins., Term. Stud	1
SD-8763	Bearing, Abs. Bronze	2
SD-8764	Stud, Terminal No. 10-32x5/16	1
SD-8765	Washer, Ins. Term. Stud, Outer	1
DC-3801	Nut, Term. Stud, Hex	2

Part No.	Description	Quantity
SC-3117	Washer, Term. Stud No. 10	1
SD-8542	Washer, Term. Stud No. 10	2
SD-8766	Cup, Grease, 1/8 Pipe	1
SD-8767	Washer, Thrust, Drive Shaft, Lower	2
SD-8768	Terminal, H.T. Wire	1
SD-8769	Snap Ring, Cam Retaining	1
SD-8770	Washer, Thrust Advance Arm	1
SD-8771	Cap Assembly, Dist.	1
SD-8772	Contact, Plunger	1
SD-8773	Spring, Contact	1
SD-8774	Arm, Advance	1
SD-8775	Wick, Felt, Cam Sleeve	1
SD-8776	Cover, Hsng., Tach. Shaft	1
SD-8777	Washer Thrust	1
SD-8778	Spacer, Cam	1
SD-8779	Shaft, Drive, Tachometer	1
SD-8780	Rotor	1
SD-8781	Shaft & Gov. Assembly	1
SD-8782	Spring, Set, Gov. Weight	1
SD-8783	Weight, Governor	2
SD-8784	Shaft, Drive	1
SD-8785	Spring, Anti-Rattle	1
SD-8786	Rivet	1
SD-8787	Lockwasher, Connector	1
SD-8788	Bearing, Ball, S.A.E. No. 202	1
SD-8789	Screw, Connector, Rd. Hd. No. 6-32x3/16	1
H-9396	Screw, Breaker Plate Mntg. Fil. Hd.	2

DISTRIBUTOR ASSEMBLY SD-8545

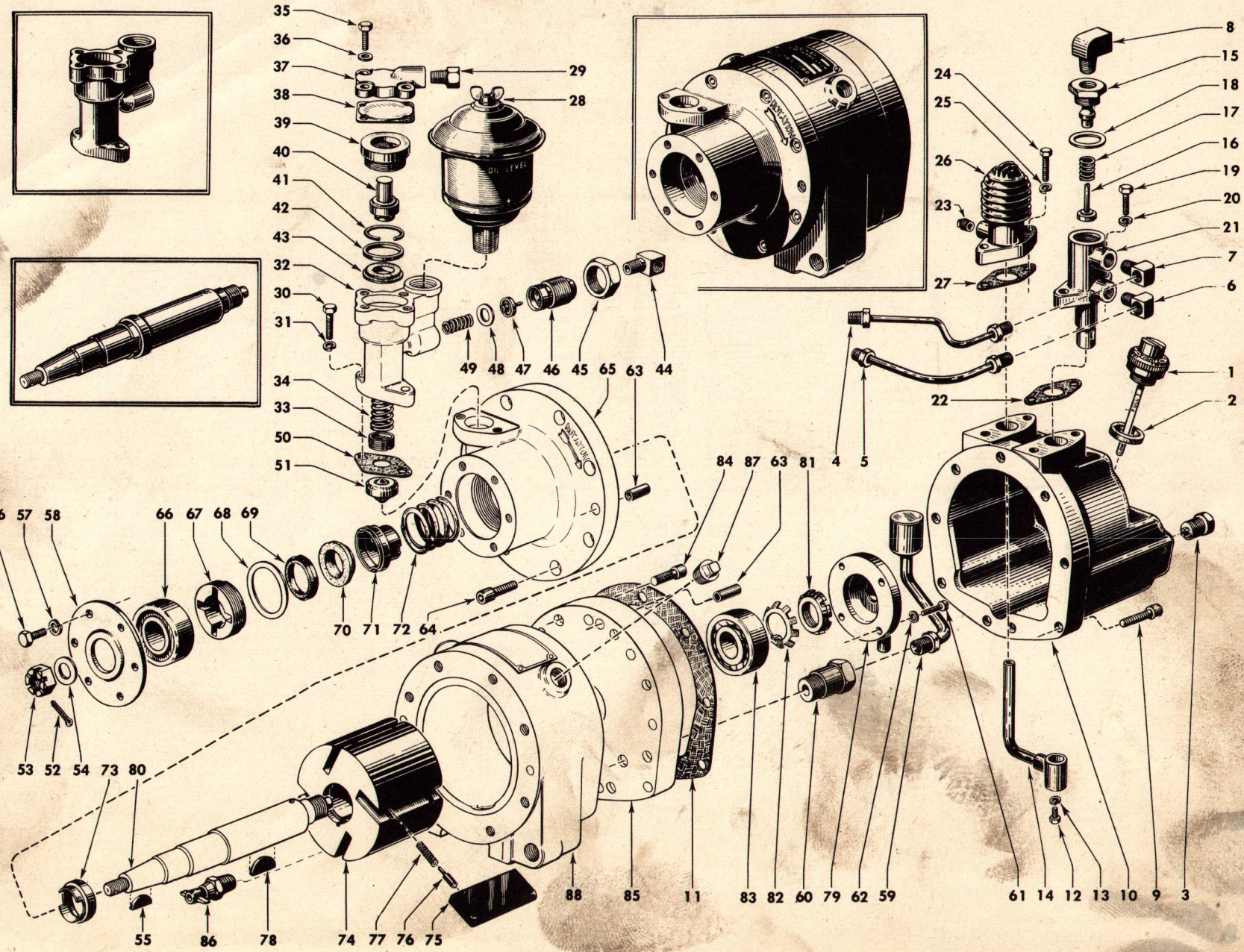
35
36
37
38
39
40
41
42
43
32
30
31
34
33
50
51
29
28
OIL LEVEL
49 48 47 46 45 65 63 44
24
25
26
23
27
8
15
18
17
16
19
20
21
7
6
1
2
22
4 5
84 87 63 81
56 57 58
66 67 68 69
70 71 72 64
53 52 54 73 80
55 86 78 74 77 76 75
88 85 11 83 82 60 79 62 59
61 14 12 13 10 9 3

AIR COMPRESSOR ASS'Y.

Item No.	Part No.	Description	Quantity
None	DC-7131	Air Compressor Assembly	1
1	SD-8336	Filler Plug & Gauge	1
2	SD-2105	Filler Plug Insert	1
3	SD-8337	Oil Drain Plug	1
4	SD-8338	Control Tube Assembly	1
5	SD-8339	Relief Tube Assembly	1
6	SD-8207	Tube Elbow	1
7	SD-8341	Tube Elbow	1
8	SD-8342	Tube Elbow	1
9	SD-8343	Capscrew	9
10	SD-8344	Oil Dome	1
11	SD-8345	Oil Dome Gasket	1
12	H-5768	Capscrew	1
13	C-5774	Lockwasher	1
14	SD-8346	Tube & Connector Assembly	1
15	SD-8347	Valve Piston Guide	1
16	SD-8348	Valve Piston Assembly	1
17	SD-2083	Check Valve Spring	1
18	SD-8349	Check Valve Gasket	1
19	S-5716	Capscrew	2
20	C-5774	Lockwasher	2
21	SD-8350	Check Valve Housing	1
22	SD-8351	Check Valve Gasket	1
23	C-5768	Pipe Plug	1
24	S-5716	Capscrew	2
25	C-5774	Lockwasher	2
26	SD-8352	Condenser Dome	1
27	SD-8351	Condenser Dome Gasket	1
28	SD-8353	Air Cleaner	1
29	SD-8354	Control Tube Nipple	1
30	S-5716	Capscrew	2
31	C-5774	Lockwasher	2
32	SD-8355	Control Valve Body	1
33	SD-8356	Spring Adjusting Screw	1
34	SD-8357	Regulating Spring	1
35	C-5746	Capscrew	4
36	SD-8358	Washer	4
37	SD-8201	Valve Body Cap	1
38	SD-8202	Control Valve Diaphragm	1
39	SD-8203	Control Valve Piston Guide	1
40	SD-8204	Control Valve Piston	1
41	SD-8205	Retainer Snap Ring	1
42	SD-8206	Insert Retainer Ring	1
43	SD-2060	Valve Body Insert	1
44	SD-8207	Tube Elbow	1
45	SD-8208	Piston Guide Locknut	1
46	SD-8209	Valve Piston Guide	1
47	SD-8210	Relief Valve Piston	1
48	SD-8211	Relief Valve Insert	1
49	SD-8212	Relief Valve Spring	1
50	SD-8213	Control Valve Gasket	1
51	SD-8214	Check Valve Assembly	1
52	SD-8215	Cotter	1
53	SD-8216	Rotor Shaft Nut	1
54	C-1549	Washer	1
55	SD-8217	Woodruff Key	1
56	H-8136	Capscrew	6
57	C-5774	Lockwasher	6
58	SD-8218	Bearing Retainer	1
59	SD-8219	Oil Separator Assembly	1
60	SD-8220	Separator Endplate Fitting	1
61	SD-8221	Machine Screw	4
62	H-2643	Lockwasher	4
63	SD-8222	Dowel Pin	4
64	SD-8223	Capscrew	8
65	None	Compressor Endplate (Not sold Separately)	
66	SD-8224	Drive End Bearing	1
67	SD-8225	Seal Retainer Ring	1
68	SD-8226	Seal Retainer Ring Gasket	1
69	SD-8227	Oil Seal Carbon Ring	1
70	SD-8228	Oil Seal Rubber Ring	1
71	SD-8229	Oil Seal Retainer	1
72	SD-8230	Oil Seal Spring	1
73	SD-8231	Rotor Shaft Collar	1
74	SD-8232	Compressor Rotor	1
75	SD-8233	Rotor Blade	4
76	SD-8234	Rotor Blade Push Pin	8
77	SD-2052	Rotor Blade Spring	8
78	SD-8235	Woodruff Key	1
79	SD-8236	Dome End Bearing Cap	1
80	SD-8237	Rotor Shaft & Collar	1
81	SD-8238	Locknut	1
82	SD-8239	Nut Lock	1
83	SD-8240	Dome End Bearing	1
84	SD-8223	Capscrew	8
85	None	Endplate—Dome End (Not Sold Separately)	
86	SD-8242	Drain Cock Assembly	1
87	C-5770	Pipe Plug	1
88	None	Stator (Not Sold Separately)	

AIR COMPRESSOR ASS'Y.

MAIN CASE GROUP

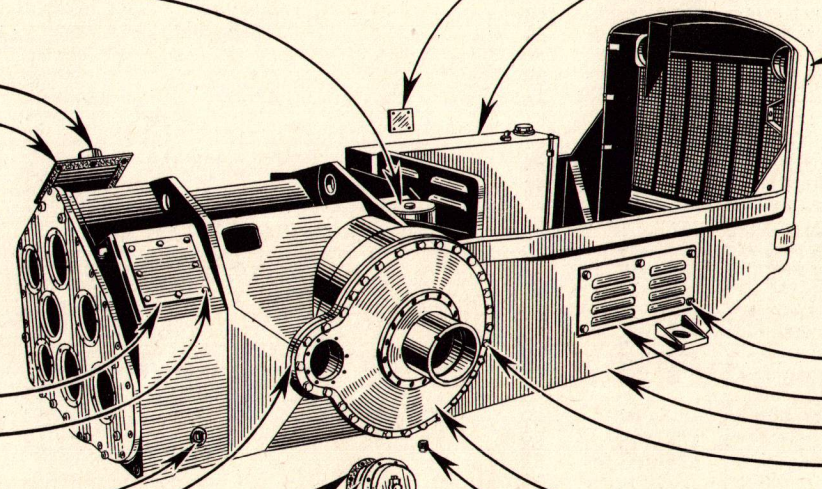

1 COVER ASS'Y -- DC-8225
INCLUDES FOLLOWING:
1 COVER ------ DC-8222
1 LOCKING BAR -- DC-8224
1 CAPSCREW ---- C-1616
1 GASKET ----- DC-9123
1 BREATHER CAP - D-6488
1 INSPECTION PLATE DC-8047
2 GASKET ----- DC-9124

1 INSPECTION PLATE-DC-7272
16 CAPSCREW ---- H-8524
16 LOCKWASHER ---- C-312

1 PLUG -------- C-5771
2 GASKET ----- R-2623
2 GASKET ----- DC-9130
1 COVER (RIGHT) - R-8383
1 COVER (LEFT) - DC-1842
1 NIPPLE ----- DC-1841
1 TUBE NUT ---- R-2795
1 INLET FITTING - DC-1802
1 NUT -------- DC-1843
2 WASHER ---- H-5891
2 WASHER ----- H-7992

DD-58 SPACER ------ 2

SEE PAGE 38

DC-5611 HEAD LAMPASS'Y 2

C-1600 CAPSCREW ---- 5
C-312 LOCKWASHER -- 5
DC-6123 COVER PLATE -- 1
DC-8234 MAIN CASE --- 1
C-1681 CAPSCREW ---- 52
C-312 LOCKWASHER -- 52

DC-4226 HOUSING ---- 2
R-2491 PLUG ----- 2

D-2102 CAPSCREW --- 12

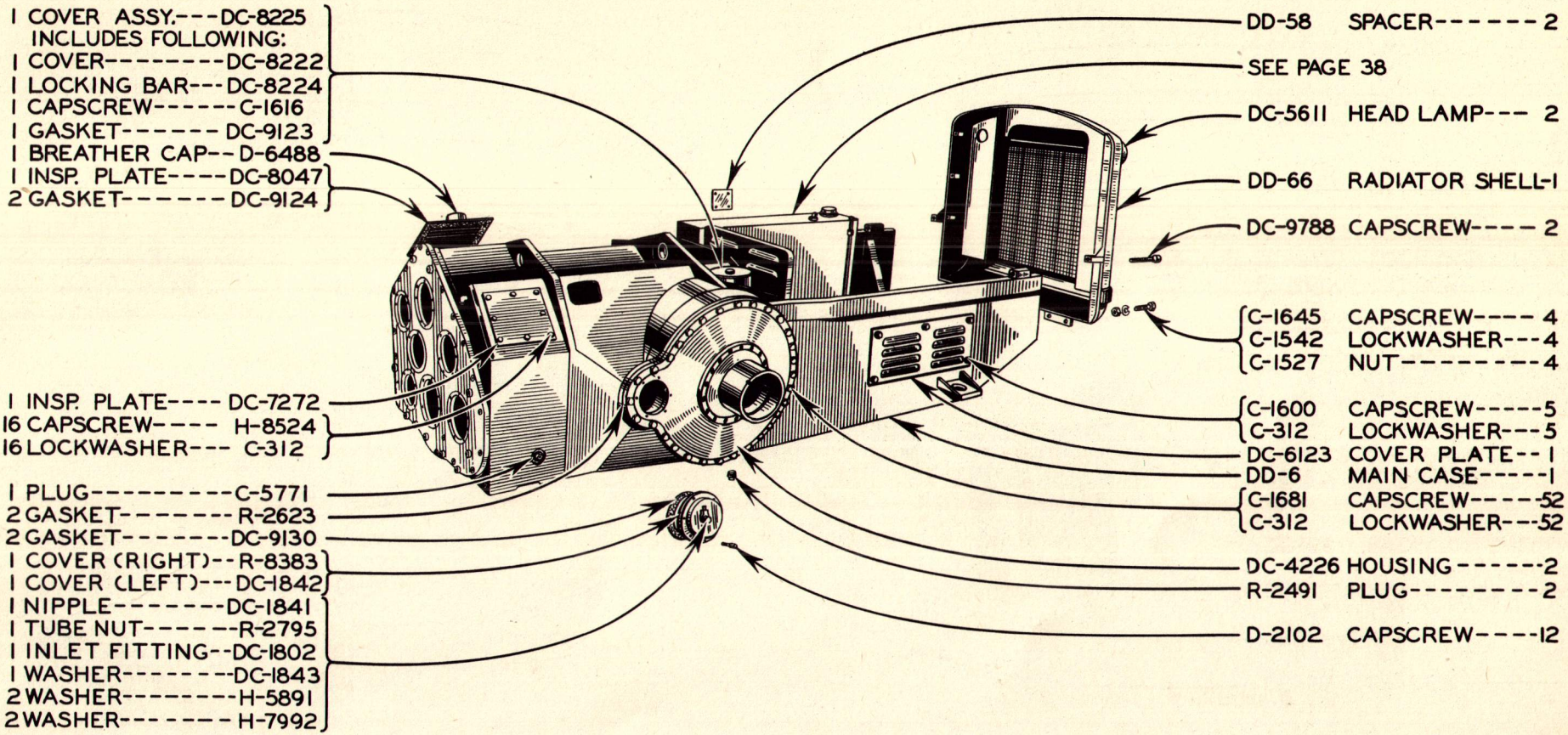

MAIN CASE GROUP

MAIN CASE GROUP

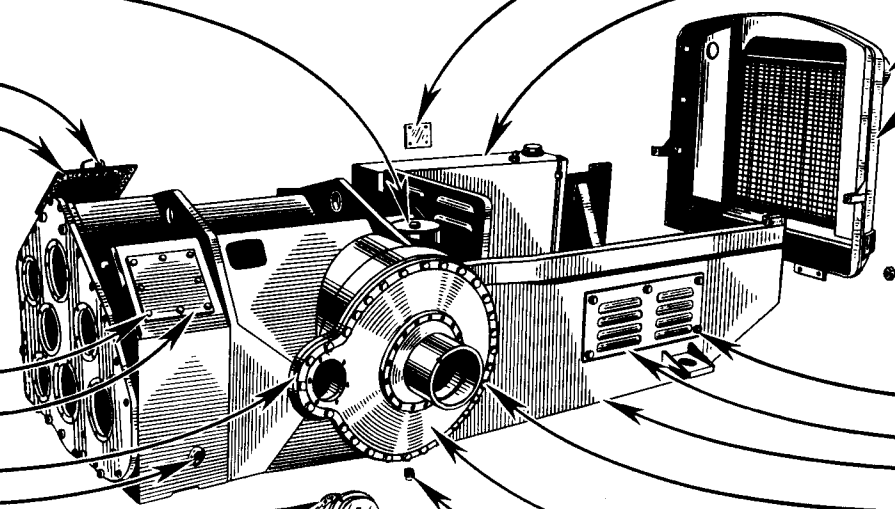

1 COVER ASSY-----DC-8225
INCLUDES FOLLOWING:
1 COVER---------DC-8222
1 LOCKING BAR----DC-8224
1 CAPSCREW-------C-1616
1 GASKET--------DC-9123
1 BREATHER CAP----D-6488
1 INSPECTION PLATE-DC-8047
2 GASKET--------DC-9124

16 CAPSCREW-------H-8524
16 LOCKWASHER------C-312
1 INSPECTION PLATE-DC-7272

2 GASKET---------R-2623
1 PLUG----------C-5771

2 GASKET--------DC-9130
1 COVER (RIGHT) ----R-8383
1 COVER (LEFT)---DC-1842
1 NIPPLE--------DC-1841
1 TUBE NUT------ R-2795
1 INLET FITTING---DC-1802
1 NUT---------- DC-1843
2 WASHER--------H-5891
2 WASHER--------H-7992

DD-58 SPACER------- 2

SEE PAGE 38

DC-5611 HEAD LAMP ASSY-2

DD-66 RADIATOR SHELL--1

DC-9788 CAPSCREW-----2

C-1645 CAPSCREW-----4
C-1542 LOCKWASHER----4
C-1527 NUT----------4

C-1600 CAPSCREW-----5
C-312 LOCKWASHER---5

DC-6123 COVER PLATE----1

DD-6 MAIN CASE-----1

C-1681 CAPSCREW-----52
C-312 LOCKWASHER---52

DC-8319 HOUSING------ 2

R-2491 PLUG--------- 2

D-2102 CAPSCREW-----12

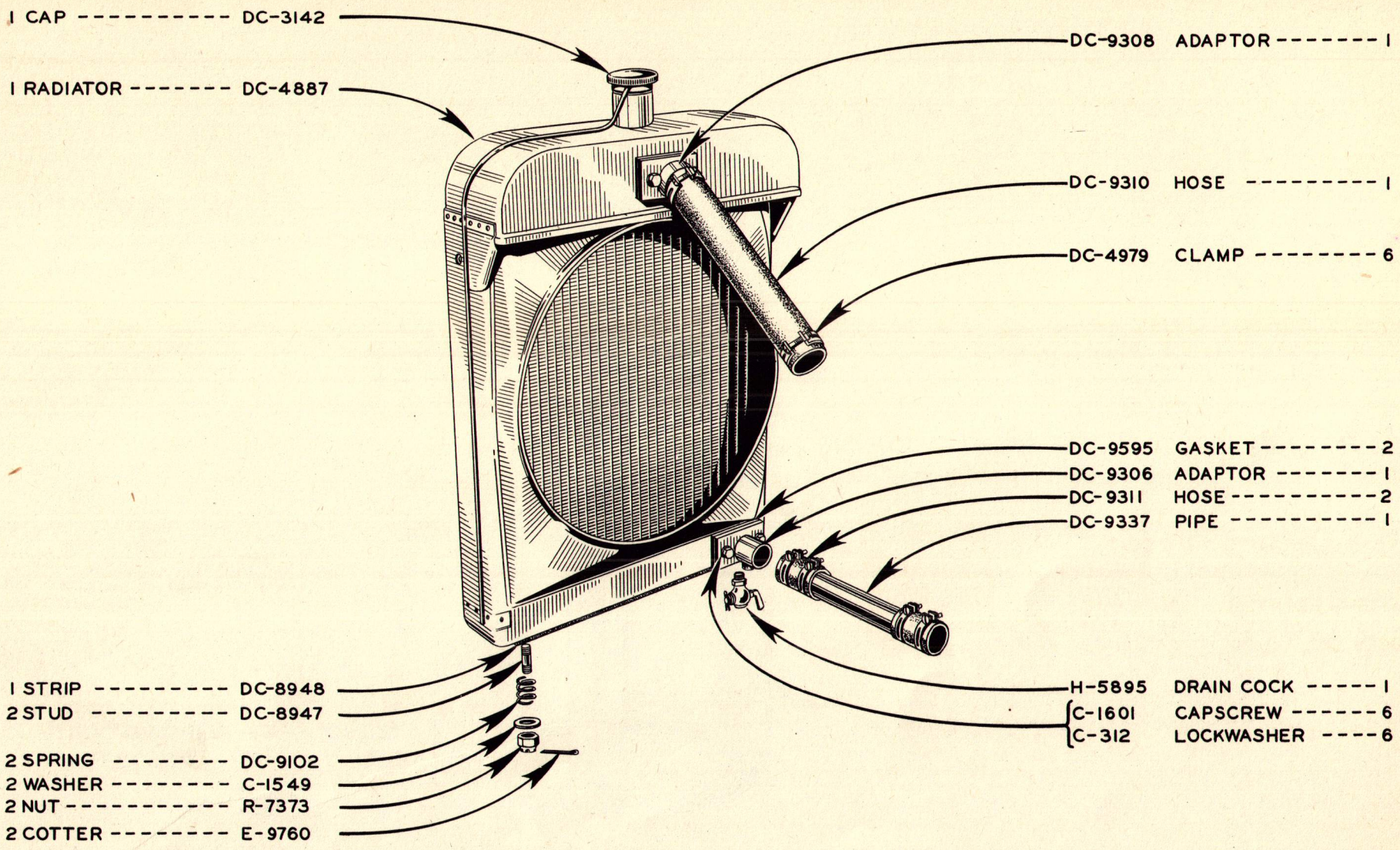

RADIATOR GROUP

AIR TANK

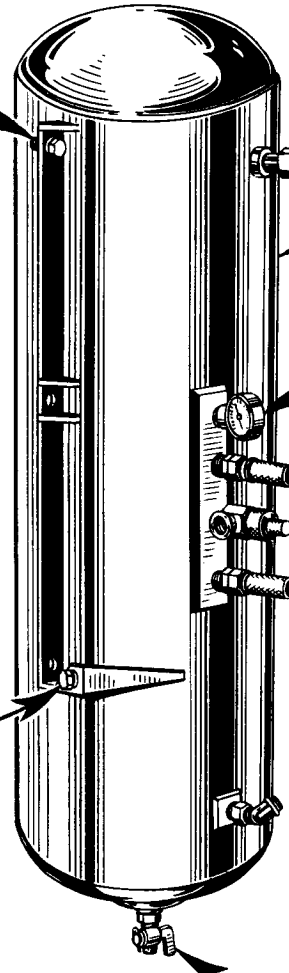
4 CAPSCREW ------ C-1602
4 LOCKWASHER ----- C-312
SC- 3636 SWITCH -------- 1
DC- 8945 AIR TANK ------ 1
(FOR USE WITH WELDED RAD. SHELL.)
DD-86 AIR TANK------ 1
(FOR USE WITH BOLTED RAD. SHELL.)
DC- 8172 GAUGE --------- 1
SEE TUBING DIAGRAM
DC- 1776 RELIEF VALVE ---- 1
SEE TUBING DIAGRAM
6 CAPSCREW ------ C-1601
6 LOCKWASHER ----- C-312
H- 5895 DRAIN COCK ----- 1

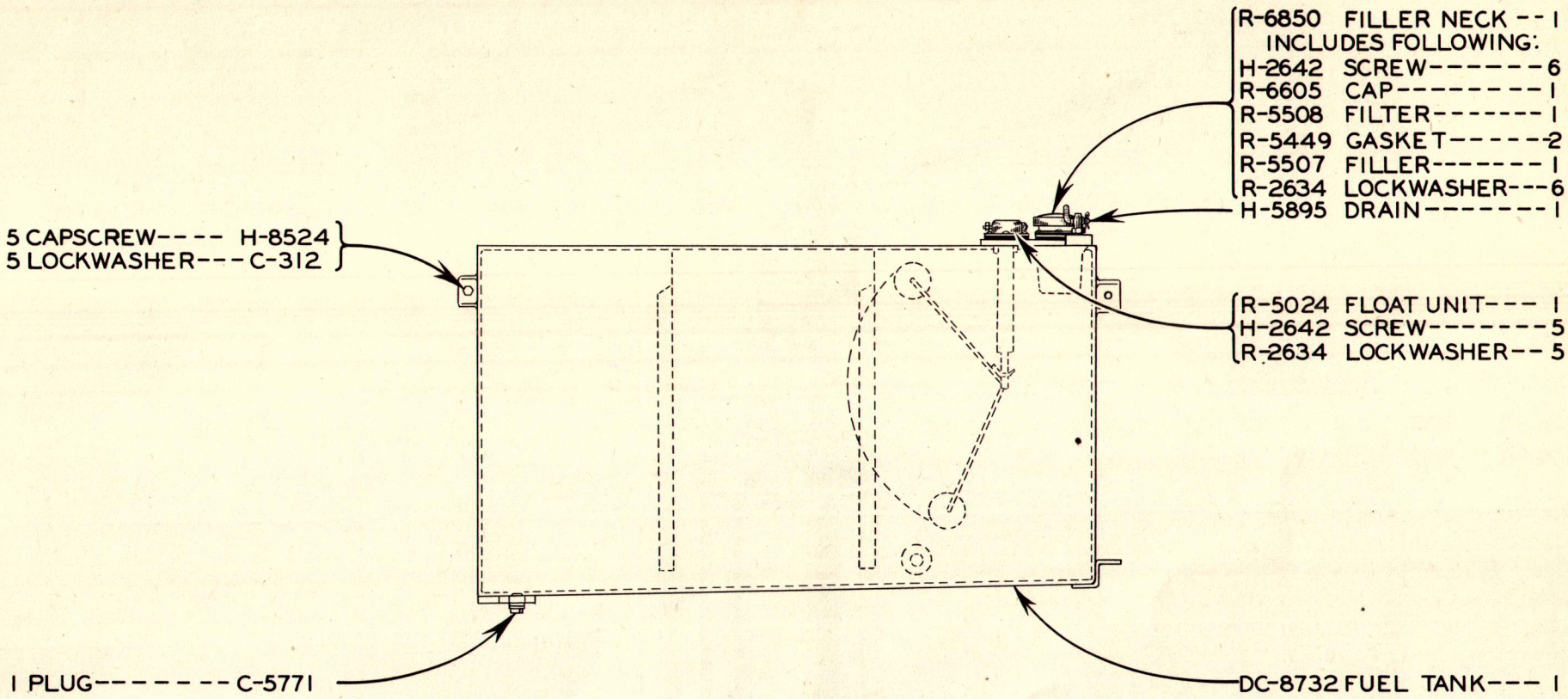

FUEL TANK ASSEMBLY DC-8733

EXHAUST GROUP

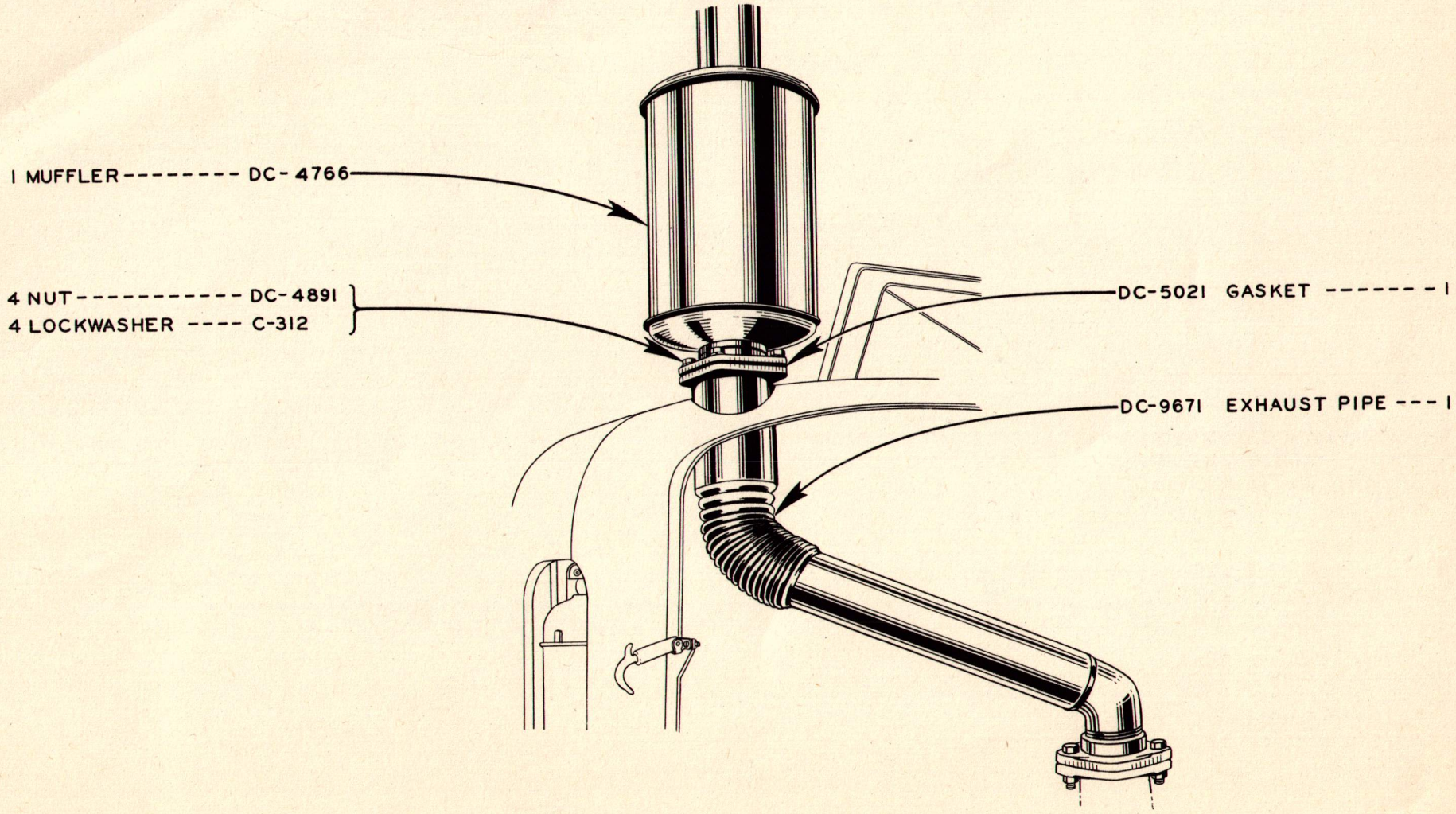

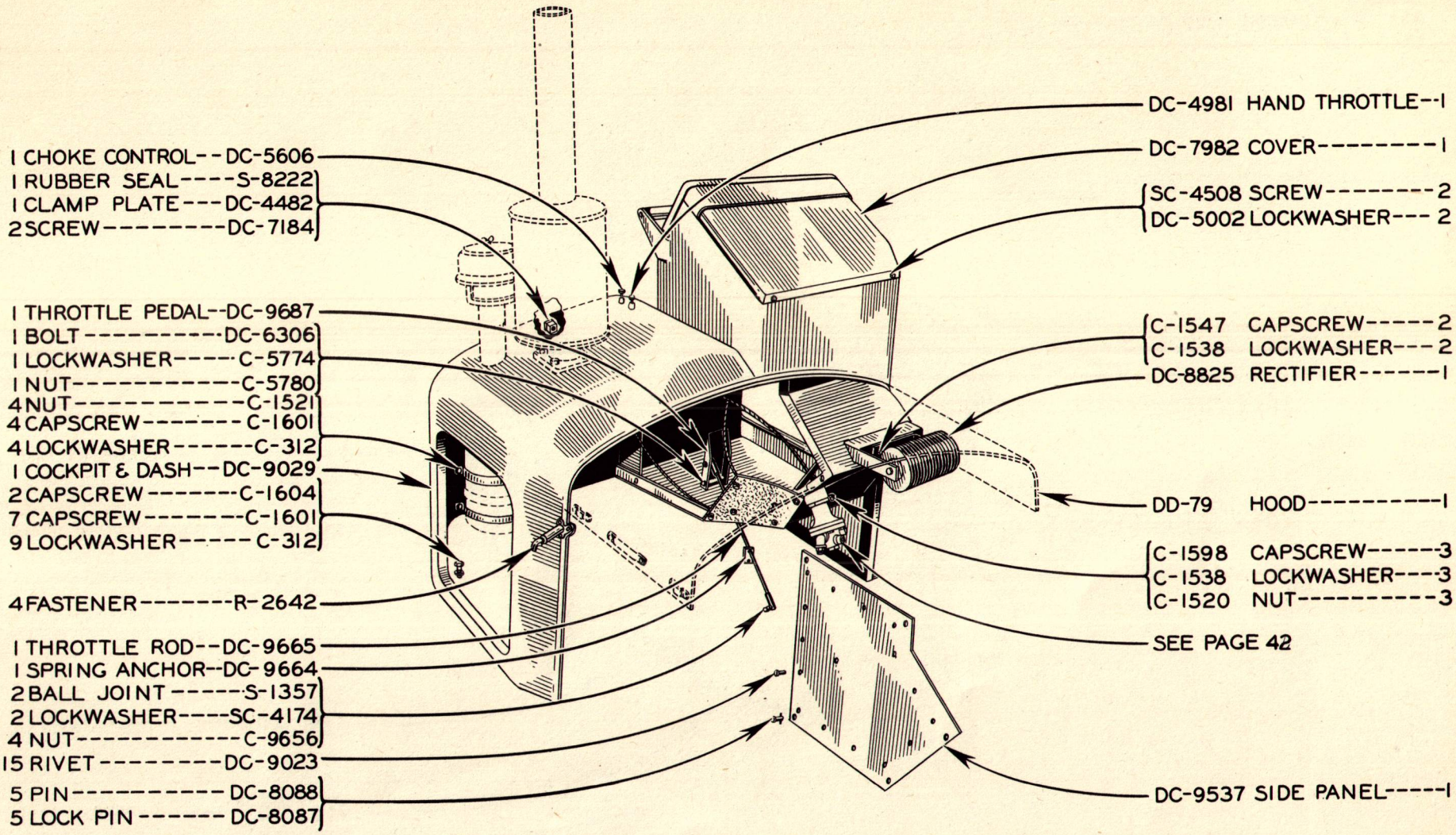

COCKPIT & HOOD GROUP

SEAT GROUP

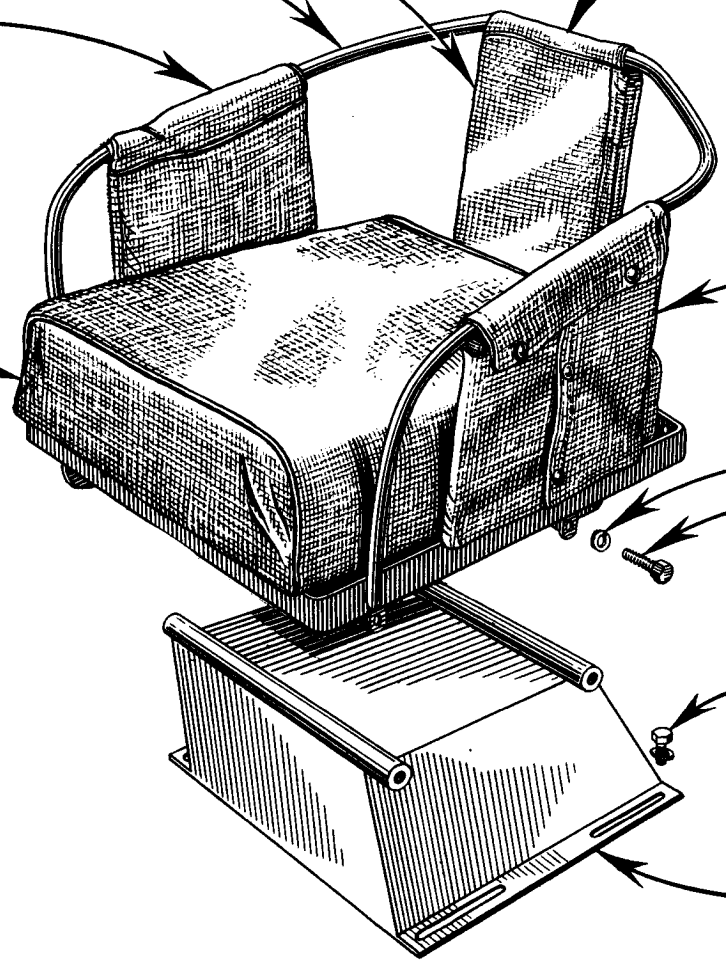
S-107 SEAT ASSY --- 1
1 PAD --------DC-213
1 FRAME ------ DC-215
1 PAD -------DC-212
DC-211 PAD --------1
1 CUSHION----- DC-214
C-312 LOCKWASHER--4
C-1603 CAPSCREW---4
E-3735 WASHER--- 4
R-3868 CAPSCREW-- 4
DC-5158 BRACKET--- 1

Item No.	Part No.	Description	Quantity
None	SD-8278	Application Valve Assy.	1
1	SD-8279	Valve Cap	1
2	SD-2069	Gasket	1
3	SD-8281	Inlet Valve Return Spring	1
4	SD-8282	Inlet Valve	1
5	S-5716	Capscrew	6
6	C-5774	Lockwasher	6
7	SD-8284	Valve Body (Lower)	1
8	SD-5844	Locknut	1
9	SD-8294	Exhaust Valve	1
10	DC-8290	Diaphragm Return Spring	1
11	SD-8291	Diaphragm Retainer Nut	1
12	SD-8292	Diaphragm Washer (Lower)	1
13	SD-8286	Diaphragm	1
14	SD-8293	Diaphragm Washer (Upper)	1
15	SD-8287	Piston	1
16	SD-8288	Metering Spring	1
17	SD-8295	Adjusting Washer	2
18	SD-8289	Plunger	1
19	SD-8285	Diaphragm Support Ring	1
20	SD-8283	Valve Body (Upper)	1
21	SD-8296	Boot	1
22	SD-8269	Mounting Bracket	1
23	SD-8270	Lockwasher	3
24	R-1352	Capscrew	3
25	SD-8297	Push Rod	1
26	SD-8272	Adjusting Screw Stop	1
27	SD-8280	Jam Nut	1
28	SD-8274	"C" Washer	2
29	SD-2119	Fulcrum Pin	1
30	SD-8271	Pin Bushing	1
31	SD-8299	Hinge Pin	1
32	H-745	Cotter	1
33	SD-8241	Adjusting Screw	1
34	SD-8273	Treadle Return Spring	1
35	SD-8298	Actuating Treadle	1

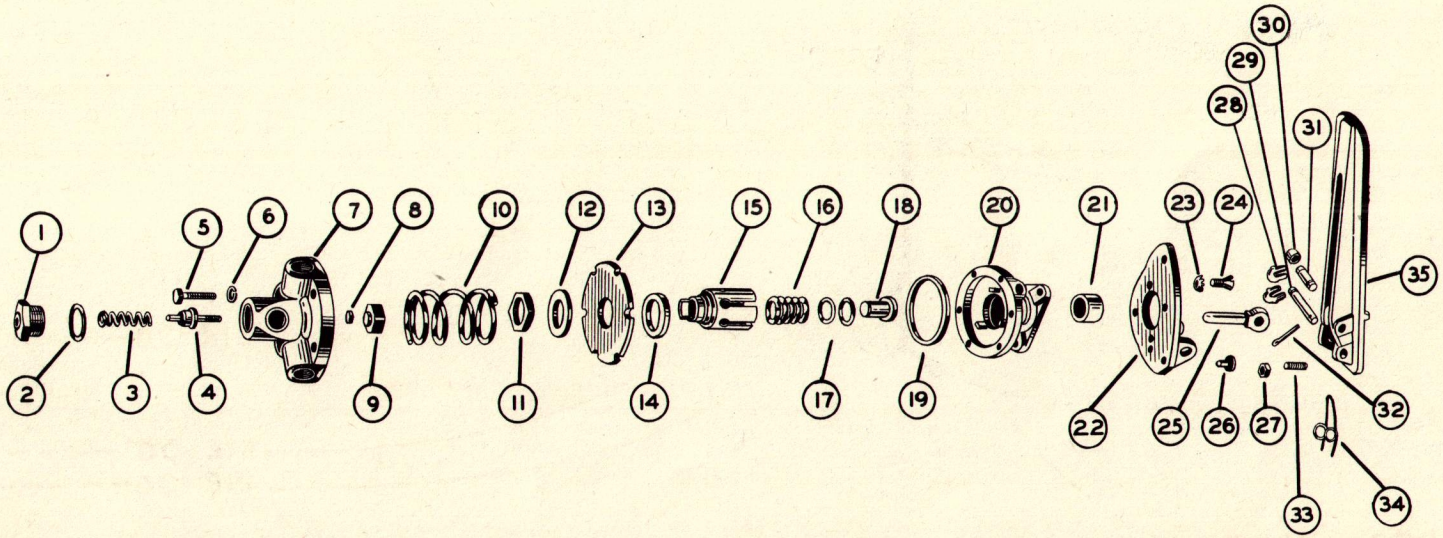

TREADLE TYPE APPLICATION VALVE ASSY.

CONTROL VALVE ASSEMBLY HC-1243

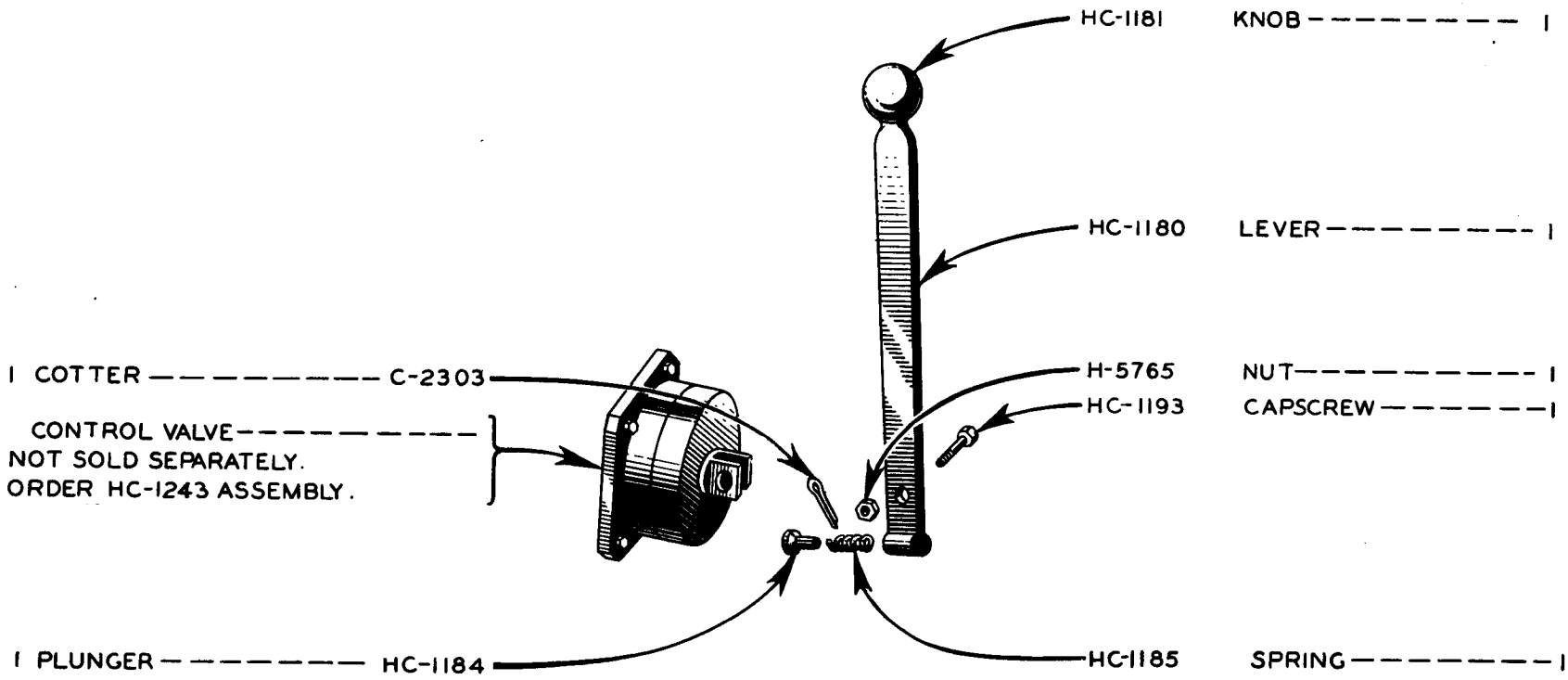

6 SCREW-------DC-5004
6 LOCKWASHER---DC-5002
1 TACHOMETER-- SC-3629

2 SCREW------ DC-5003
1 SWITCH----- SC-3623
1 BOOT--------DC-5016
1 GASKET-------SC-3644

4 SWITCH-------SC-3639

1 INDICATOR(DIFF.) SC-5306
1 BULB-------- SC-5718
1 INDICATOR (ENG.) SC-5305
1 BULB-------- SC-5718
1 INDICATOR (AIR)-SC-3618
1 BULB-------- SC-5718
1 PANEL-------DC-9442

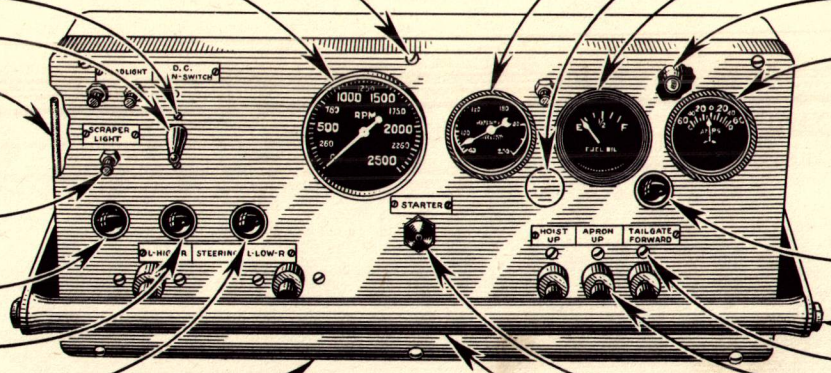

SC-3631 INDICATOR (HEAT) 1
DC-9406 PLUG--------- 1
DD-4 FUEL GAUGE----1
DC-5441 HOLDER & SHIELD- 2
SC-3637 SOCKET & WIRE---2
SC-3643 BULB-------- 2
SC-3630 AMMETER-----1

SC-3617 INDICATOR (FUEL) 1
SC-5718 BULB---------1
C-5799 CAPSCREW-----2
C-312 LOCKWASHER---2
DC-5004 SCREW------- 10
DC-9186 SWITCH------- 5
DC-5636 SWITCH-------1
DC-8620 HAND RAIL----1

INSTRUMENT PANEL

CLUTCH GUARD & BATTERY BOX

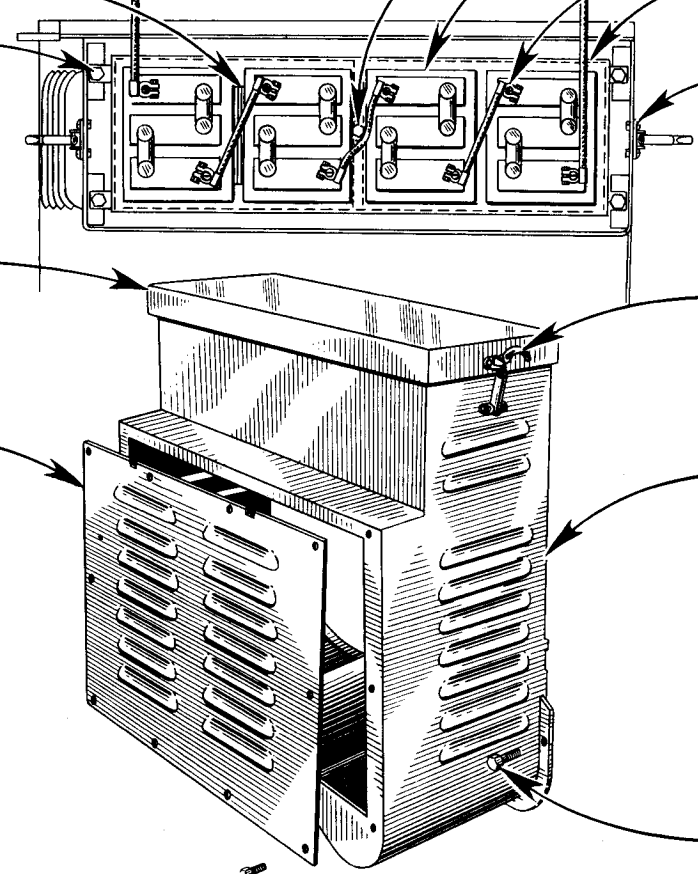

1 CAPSCREW - - - - C-1600

1 GROUND CABLE - DC-8747

SHIM - - - - - - - DC-8046

4 CAPSCREW - - - - C-1605
4 LOCKWASHER - - - C- 312

1 COVER - - - - - - DC-7772

1 COVER - - - - - - DC-8542

8 CAPSCREW - - - - - C-1600
8 LOCKWASHER - - - - C-312

C-312 LOCKWASHER - - 1
C-1521 NUT - - - - - - - - 1

EXIDE BATTERY #SS-151 - - 4 *

DC-8749 STARTER CABLE 1

DC-6054 CONNECTOR CABLE 3

DC-8546 FRAME - - - - - - 1

H-2644 NUT - - - - - - - - 4
H-2642 SCREW - - - - - - 4

R- 2642 FASTENER - - - - 2

DC-8397 CLUTCH GUARD - 1

C- 1611 CAPSCREW - - - - 15
C-1540 LOCKWASHER - - 15

* ORDER FROM EXIDE DISTRIBUTOR

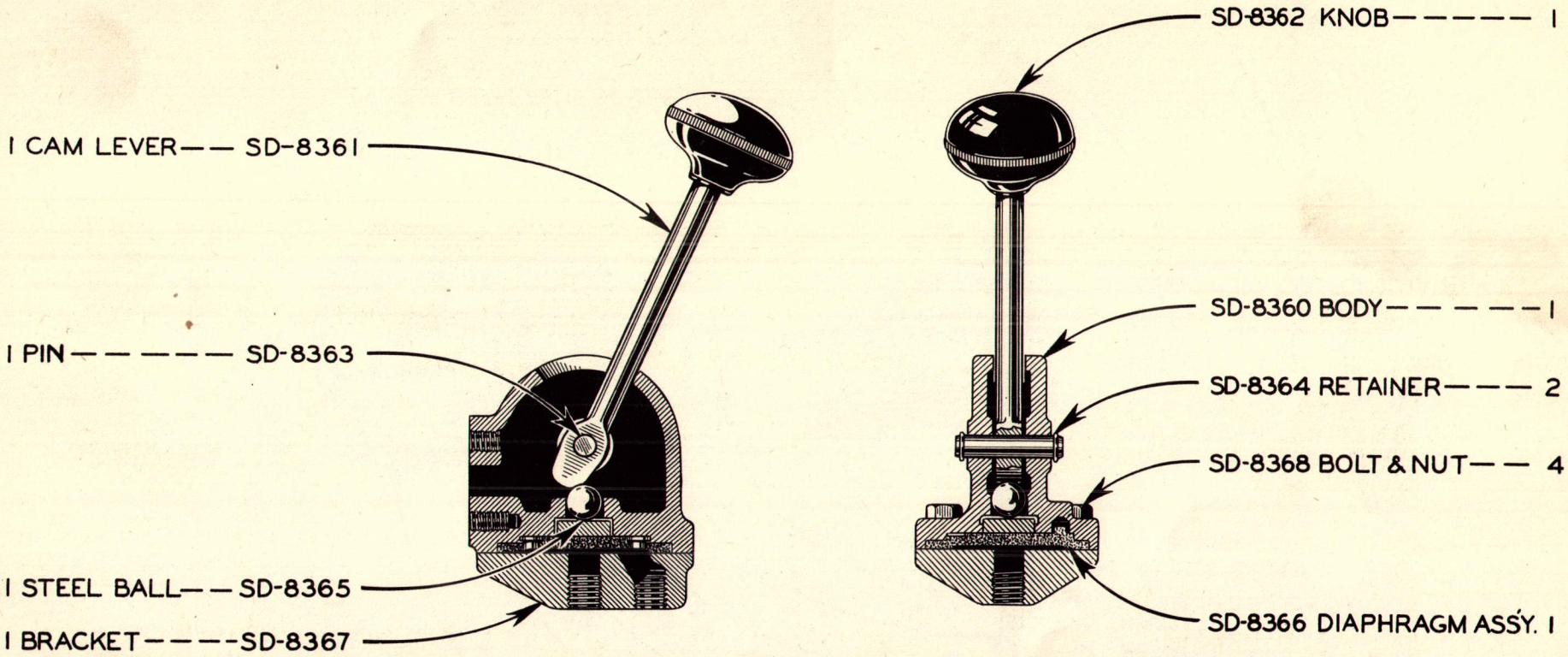

PARKING BRAKE AIR VALVE ASSEMBLY SD-8359

GENERATOR ASSEMBLY

(EFFECTIVE WITH SERIAL NO. B6T-2060-D6 THROUGH B6T-2143-D6A.)

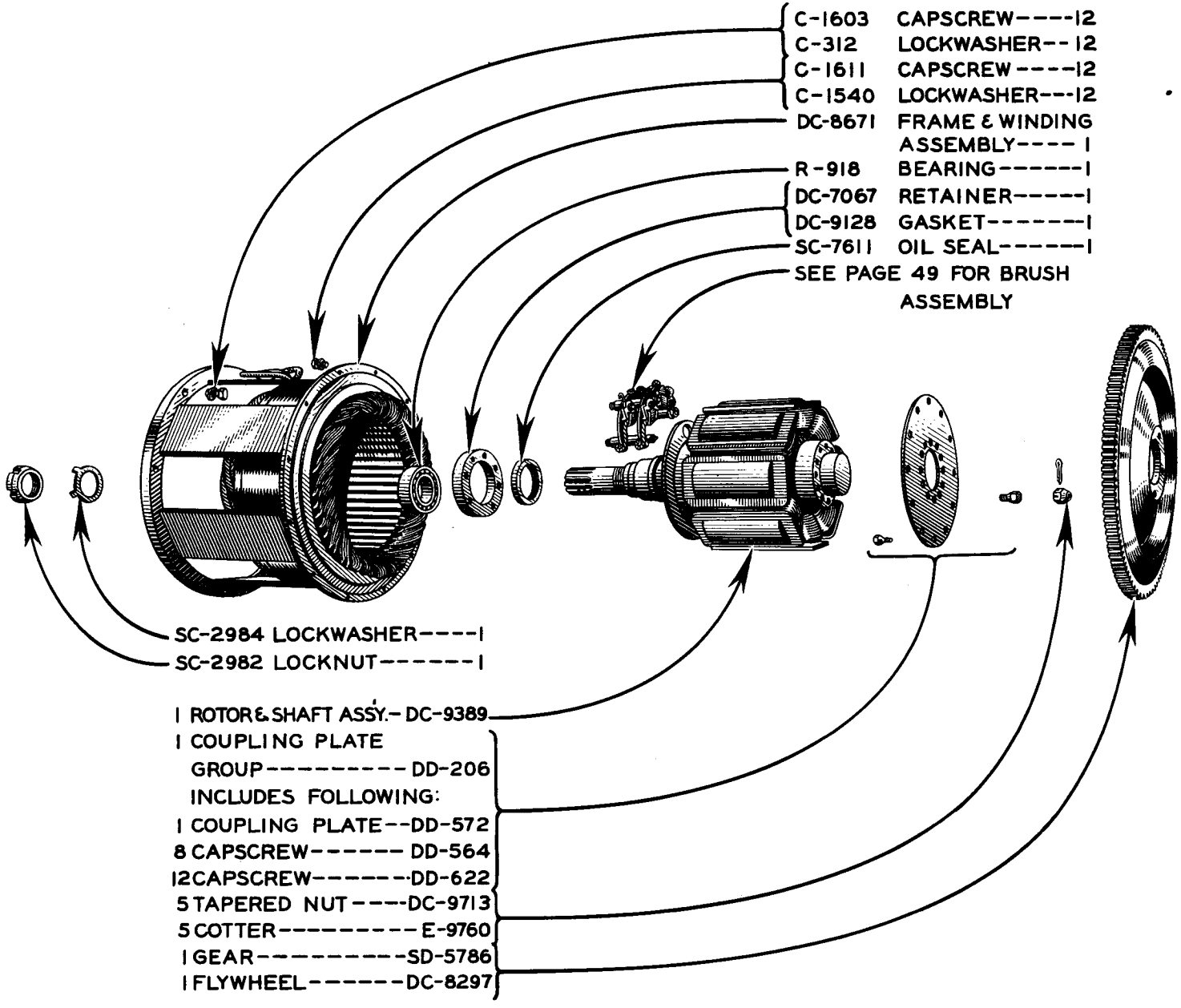

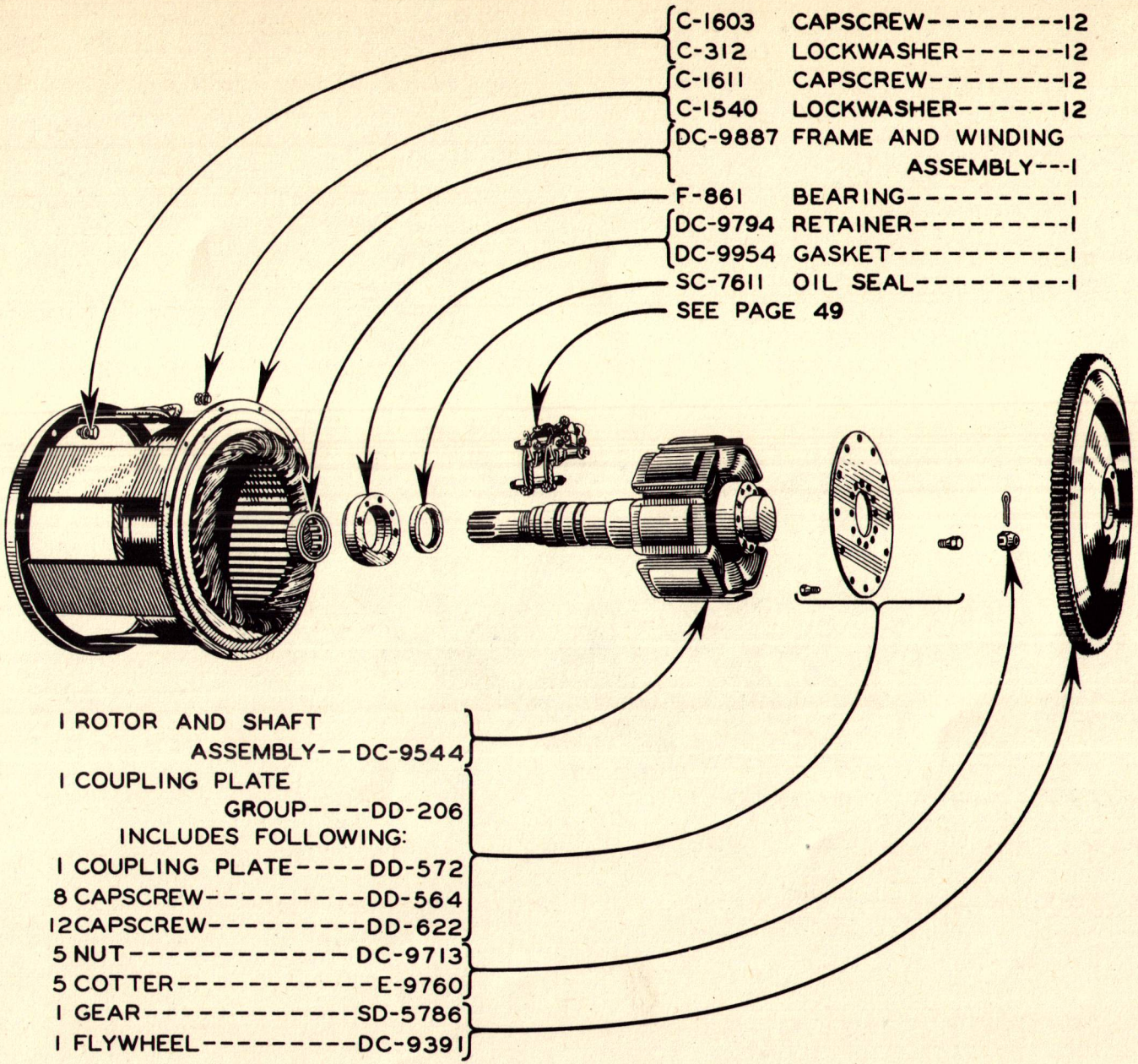

EFFECTIVE WITH SERIAL NO.B6T-2144-D6B & UP.

GENERATOR ASSEMBLY

BRUSH ASSEMBLY--DC-8061

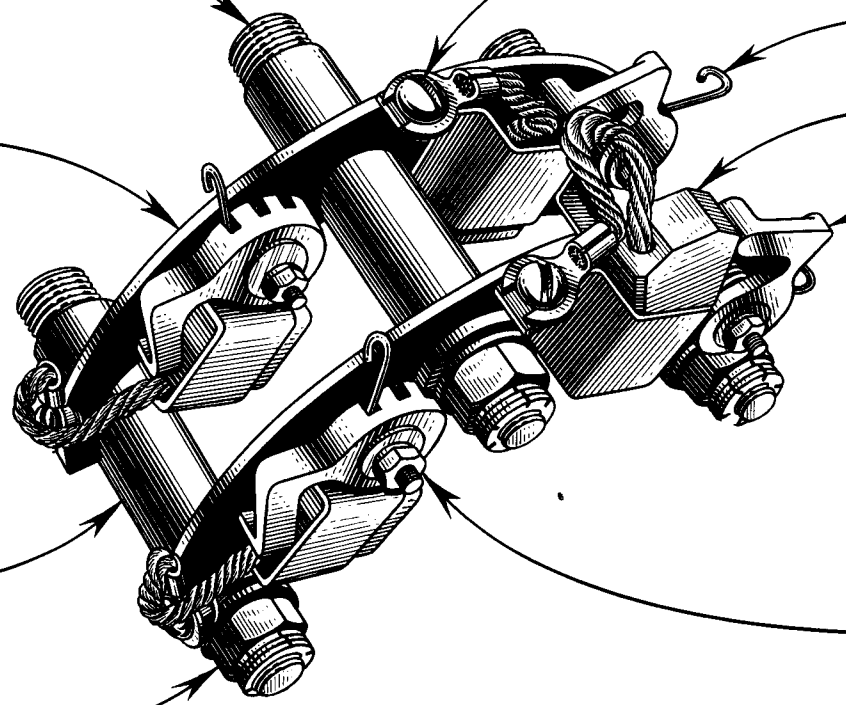

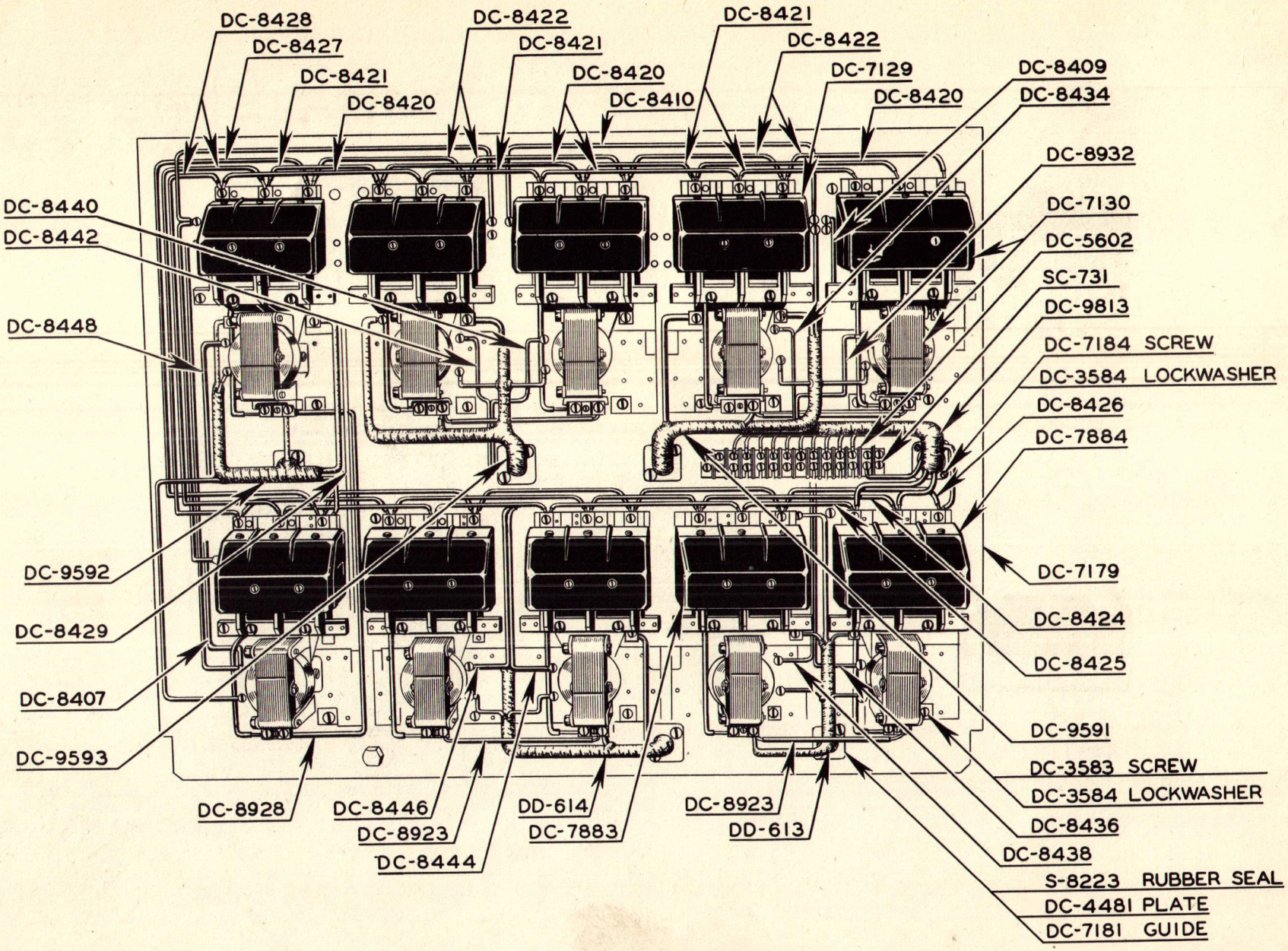

SWITCH PANEL GROUP

WESTINGHOUSE CONTACTOR ASSEMBLY

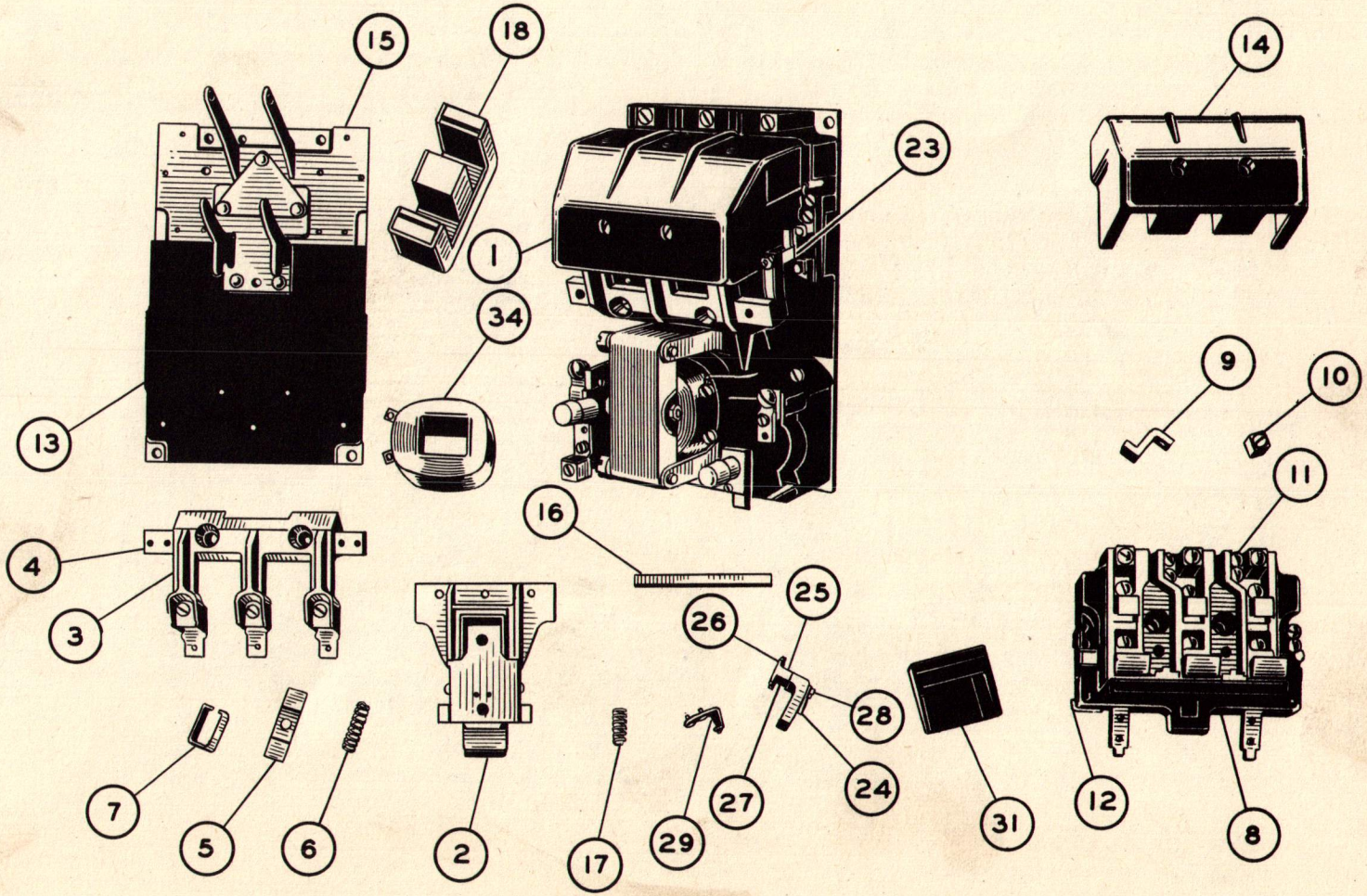

WESTINGHOUSE CONTACTOR

Item No.	Part No.	Description	Quantity
1		Contactor (10 per machine)	1
2	SD-8964	Core—Armature	1
3	SD-8965	Cross Bar—Complete	1
4	SD-8966	Cross Bar	1
5	DC-8187	Contact—Moving	3
6	SD-8967	Spring—Contact	3
7	SD-8968	Support—Moving Contact	3
8	SD-8969	Base Complete — Stationary Contact	1
9	DC-8188	Contact—Stationary	6
10	SD-8970	Terminal—Upper	3
10	SD-8971	Terminal — Lower Left Hand	1
10	SD-8972	Terminal — Lower Right Hand	1
10	SD-8973	Terminal—Center	1
12	SD-8974	Base—With Arc Horn	1
14	SD-8975	Arc Box	1
*15	SD-8976	Base Plate—Complete	1
13	SD-8977	Insulation	1
16	SD-8978	Bar—Bearing	1

Item No.	Part No.	Description	Quantity
17	SD-8979	Spring—Kickout	1
18	SD-8980	Core Stationary	1
None	SD-8981	Bolt—for Magnet	2
23	SD-8982	Interlock—Type L-45	1
24	SD-8983	Arm—Moving Contact	1
25	SD-8984	Support—Moving Contac	1
26	SD-8985	Contact—Moving	1
27	SD-8986	Spring—Contact	1
28	SD-8987	Screw—Moving Contact	2
29	SD-8988	Contact—Stationary	4
11	SD-8989	Screw—Washer Head	1
31	SD-8990	Block—Terminal	1
*34	DC-9399	Coil—Operating (AC)	—
*34	SD-8991	Coil—Operating (DC)	—

*When ordering, specify identification number on coil.
Parts indented are included in the part under which they are indented.
Order parts by description, style number, and complete name plate reading.

WESTINGHOUSE CONTACTOR

STEERING TRUNNION GROUP

(EFFECTIVE WITH SERIAL NO. B6T-2060-D6 THROUGH B6T-2085-D6)

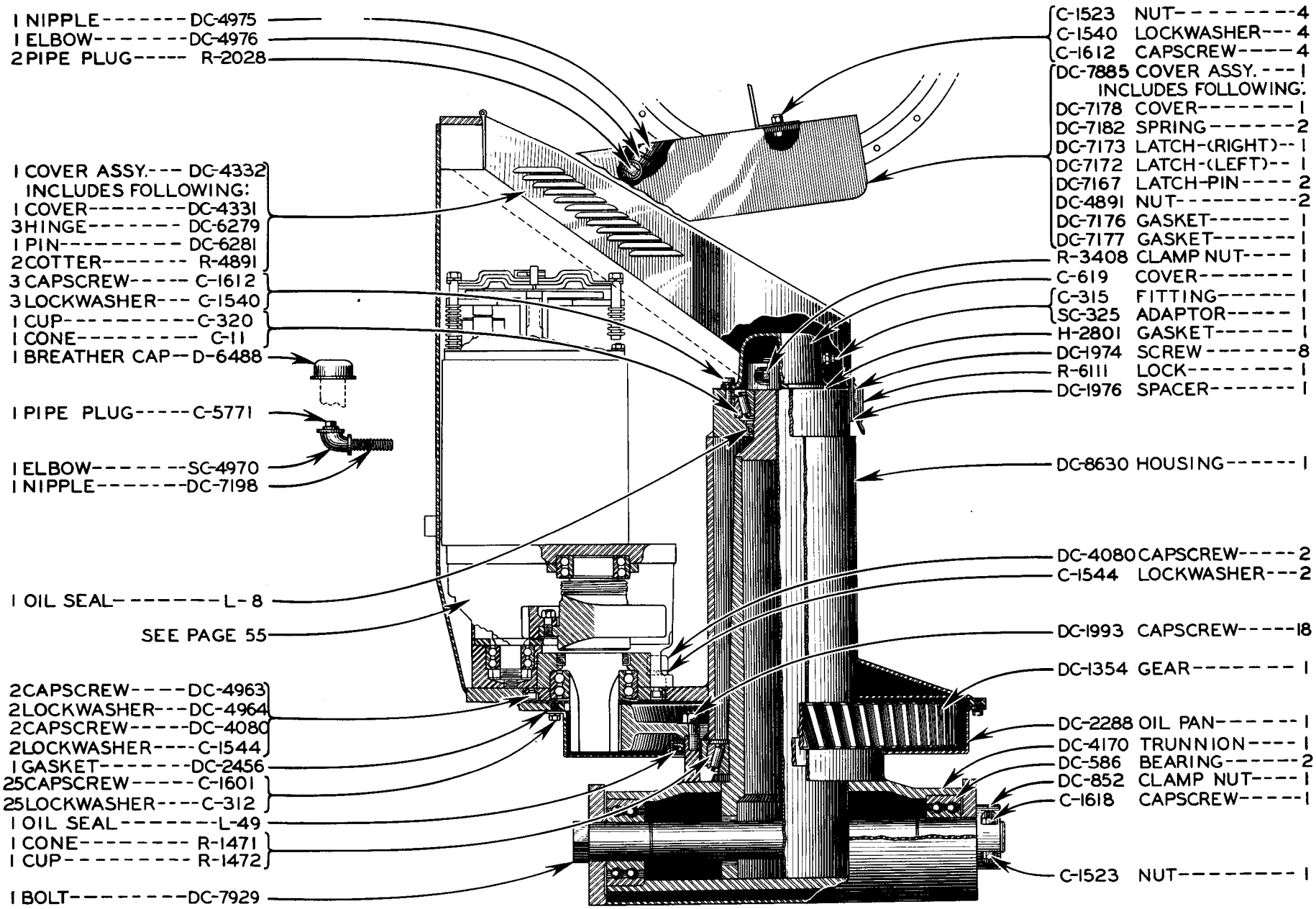

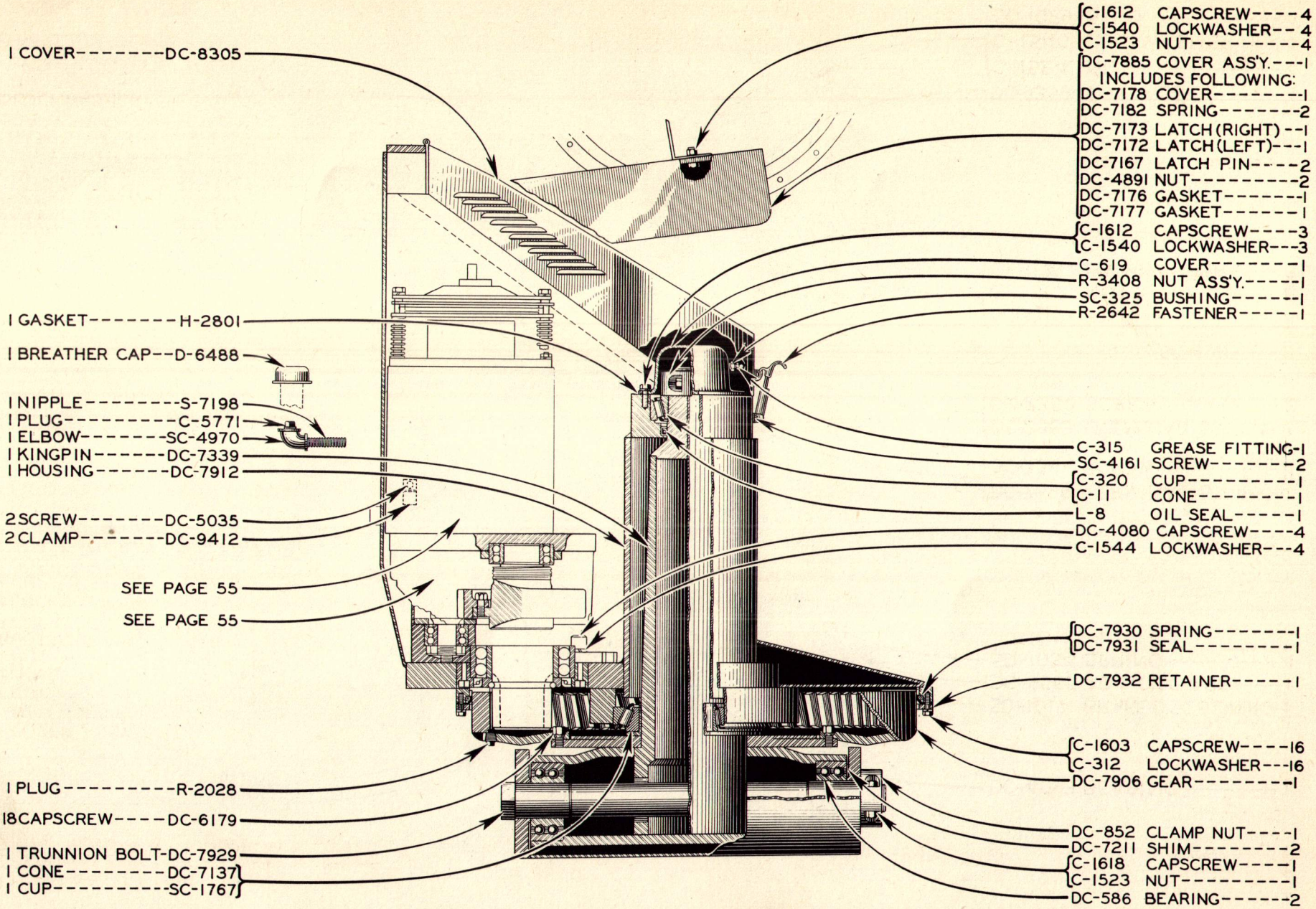

STEERING TRUNNION GROUP

(EFFECTIVE WITH SERIAL NO. B6T-2086-D6A AND UP)

STEERING MOTOR GROUP

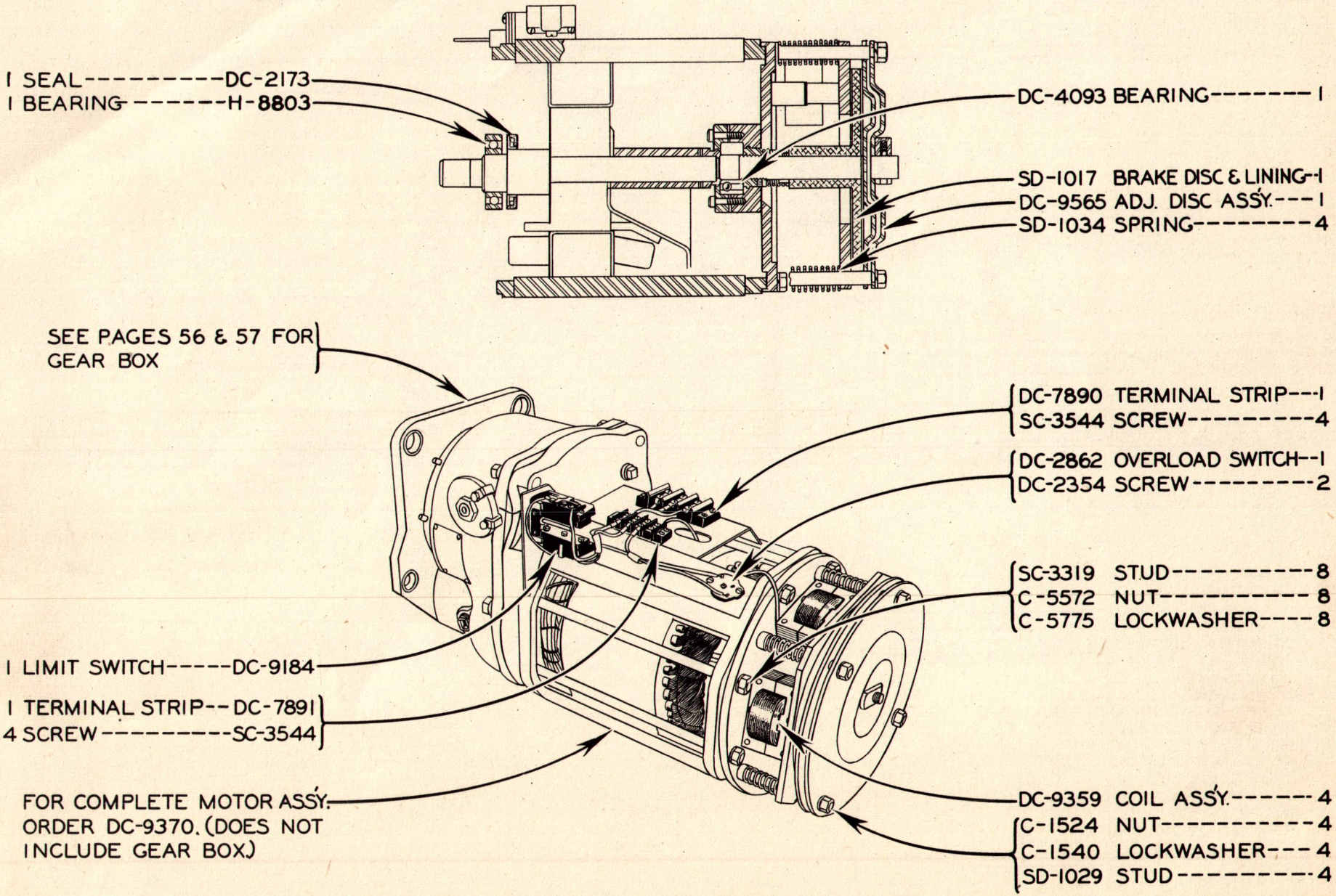

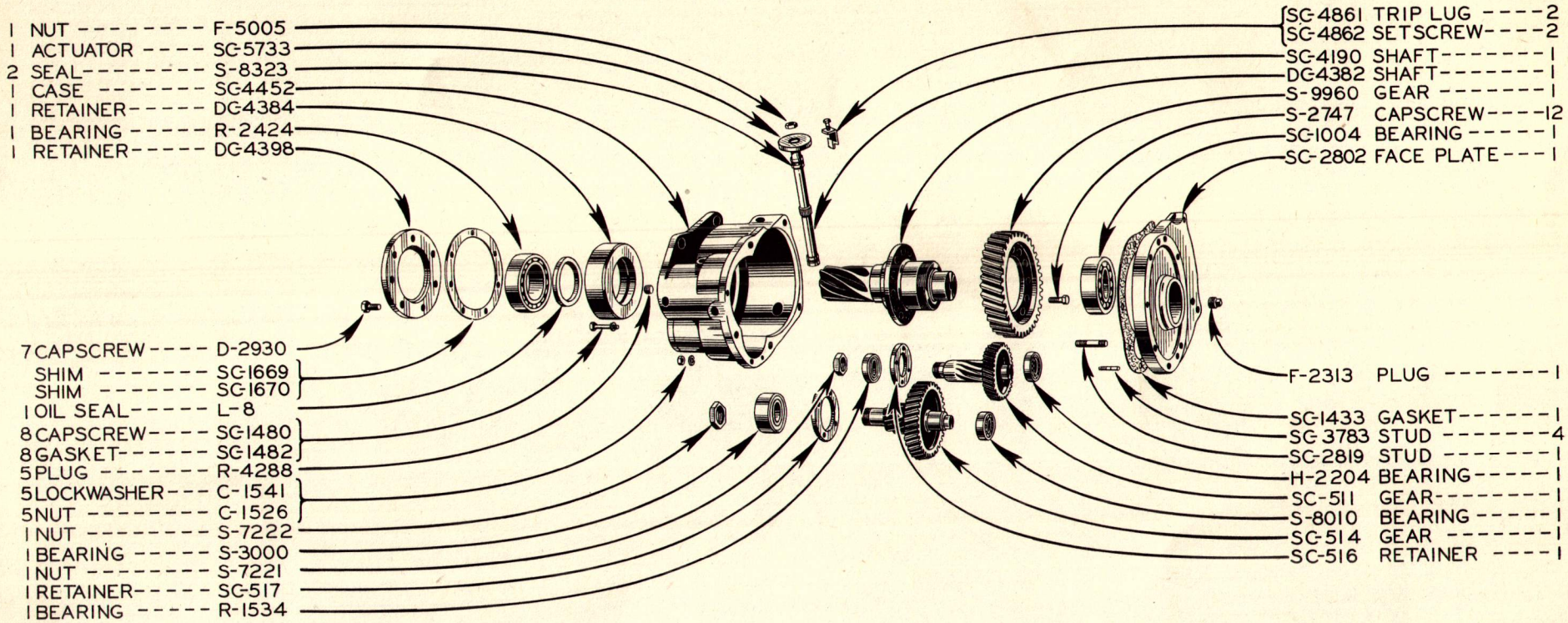

GEAR BOX ASSEMBLY--SC-4465
(FOR STEERING)
(EFFECTIVE WITH SERIAL NO. B6T-2060-D6 THROUGH B6T-2085-D6)

GEAR BOX ASSEMBLY SD-2221
(FOR STEERING)

(EFFECTIVE WITH SERIAL NO B6T-2086-D6A & UP.)

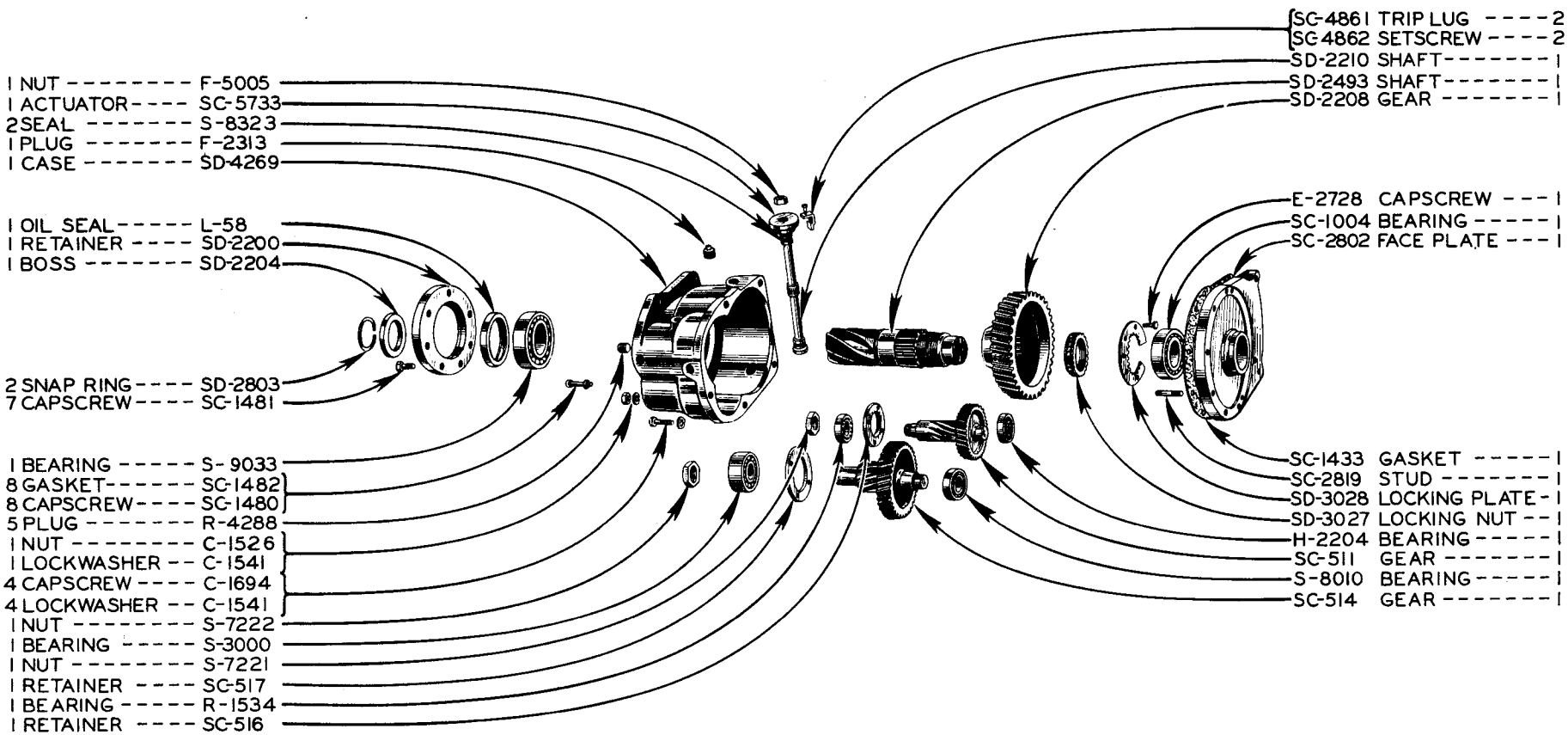

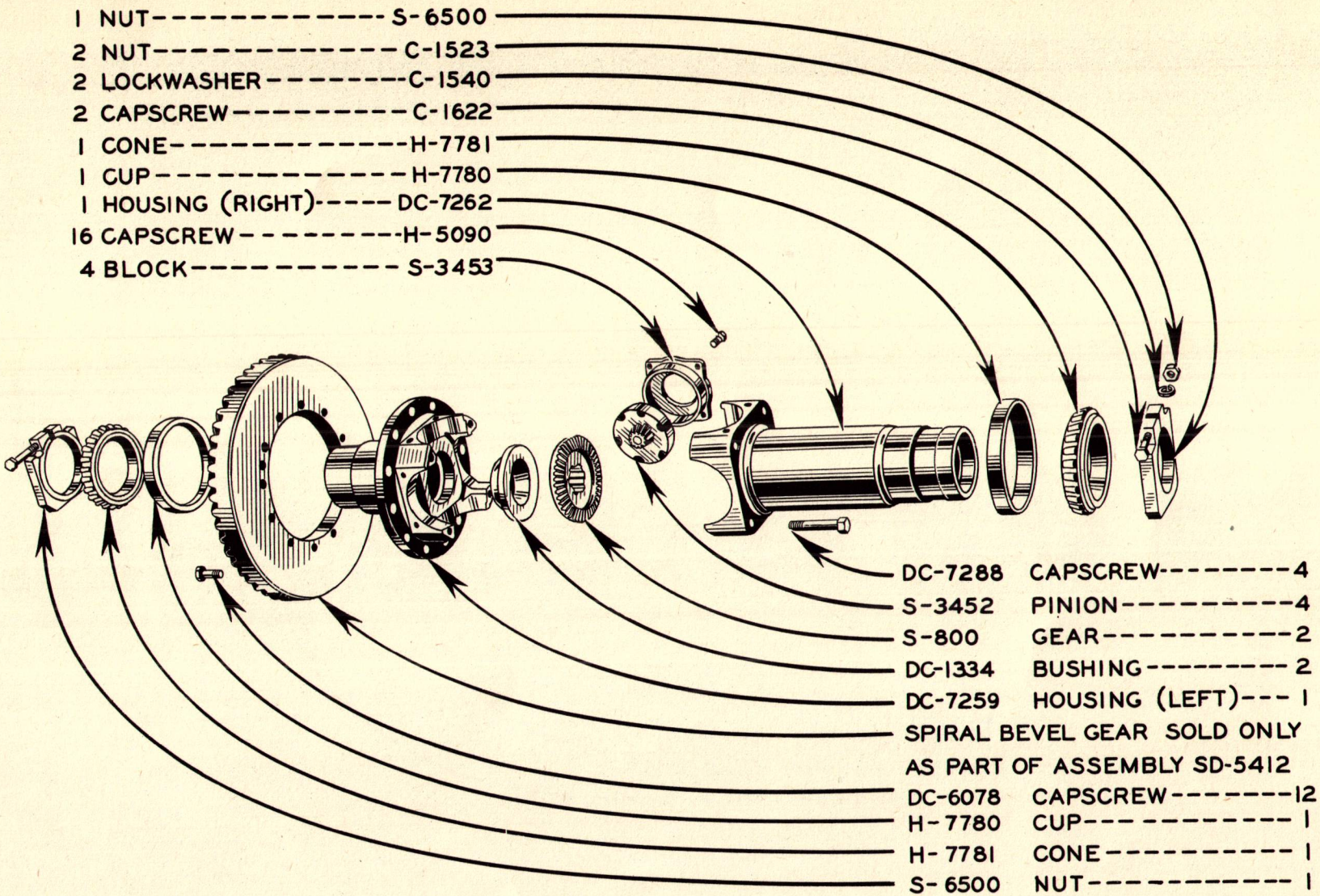

DIFFERENTIAL ASSEMBLY DC-7545

FINAL DRIVE PINION

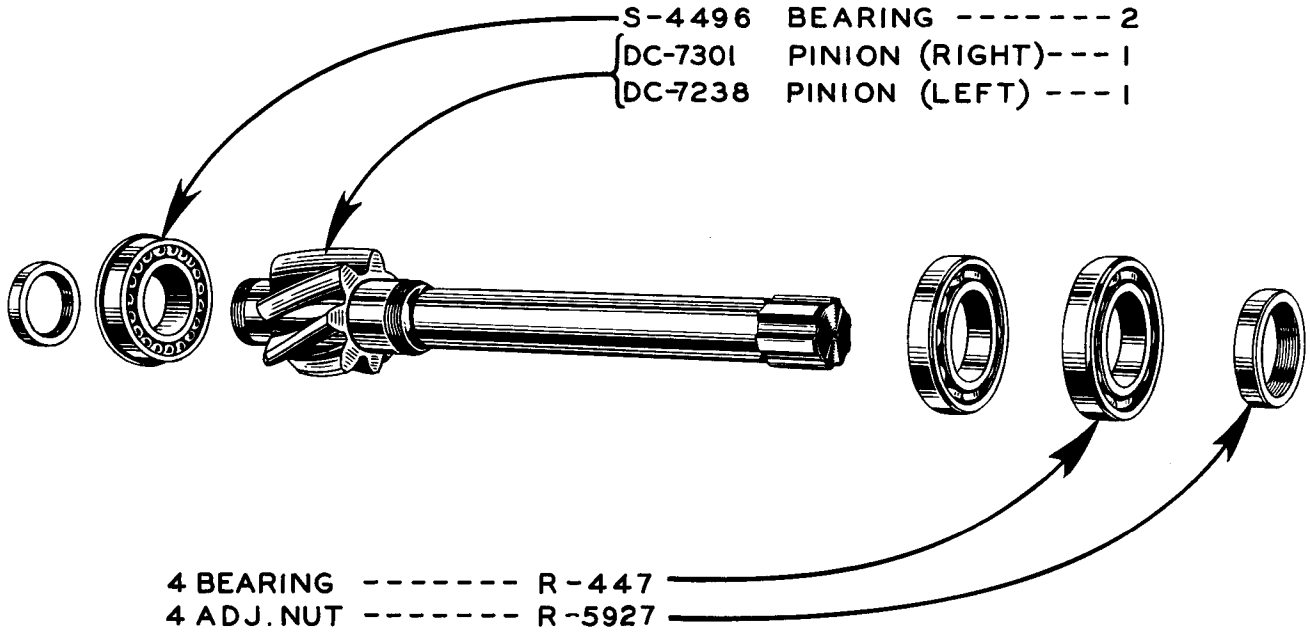

QUANTITIES SHOWN ARE FOR BOTH THE RIGHT & LEFT

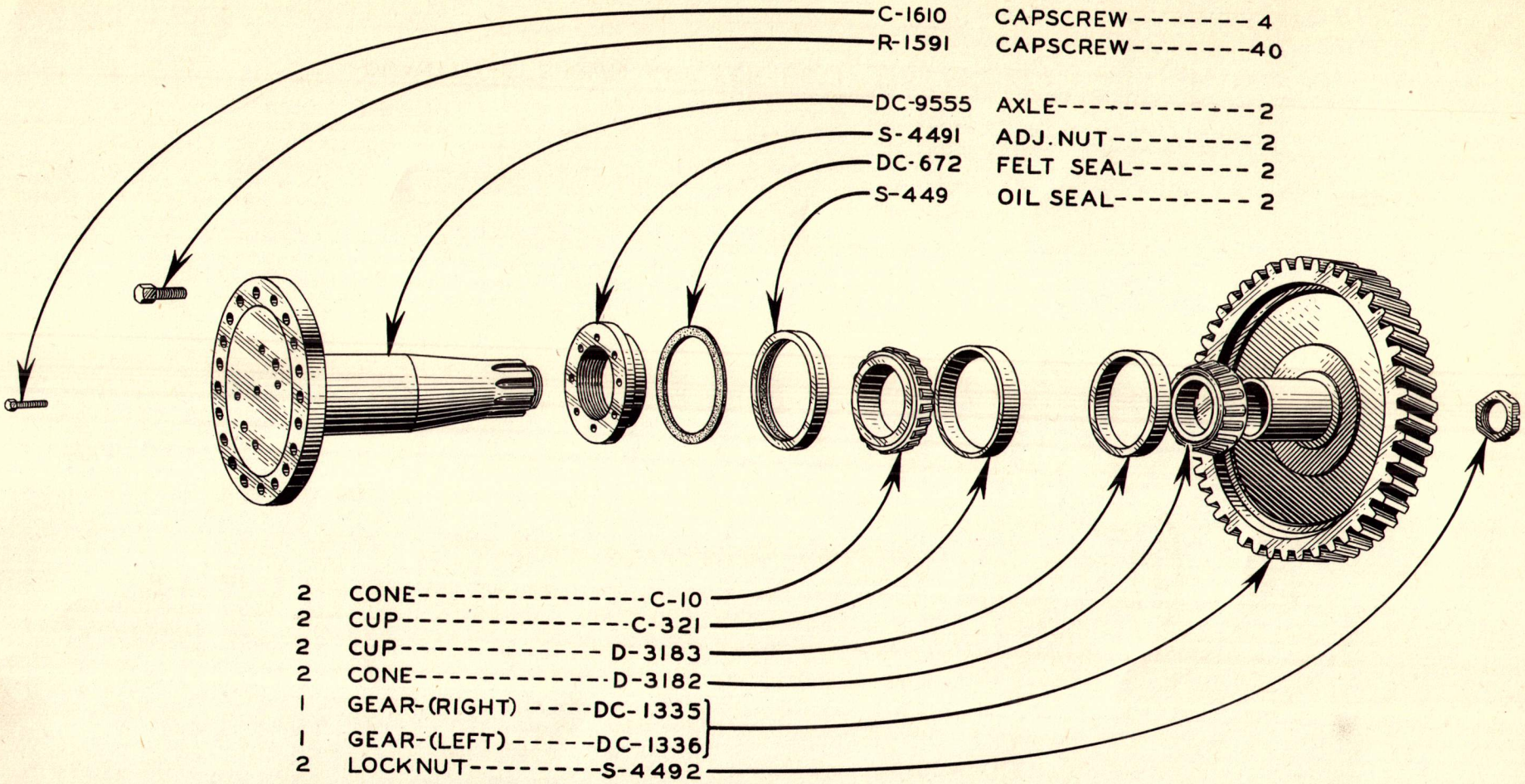

QUANTITIES SHOWN ARE FOR BOTH LEFT AND RIGHT.

FINAL DRIVE AXLE GROUP

FINAL DRIVE AXLE GROUP

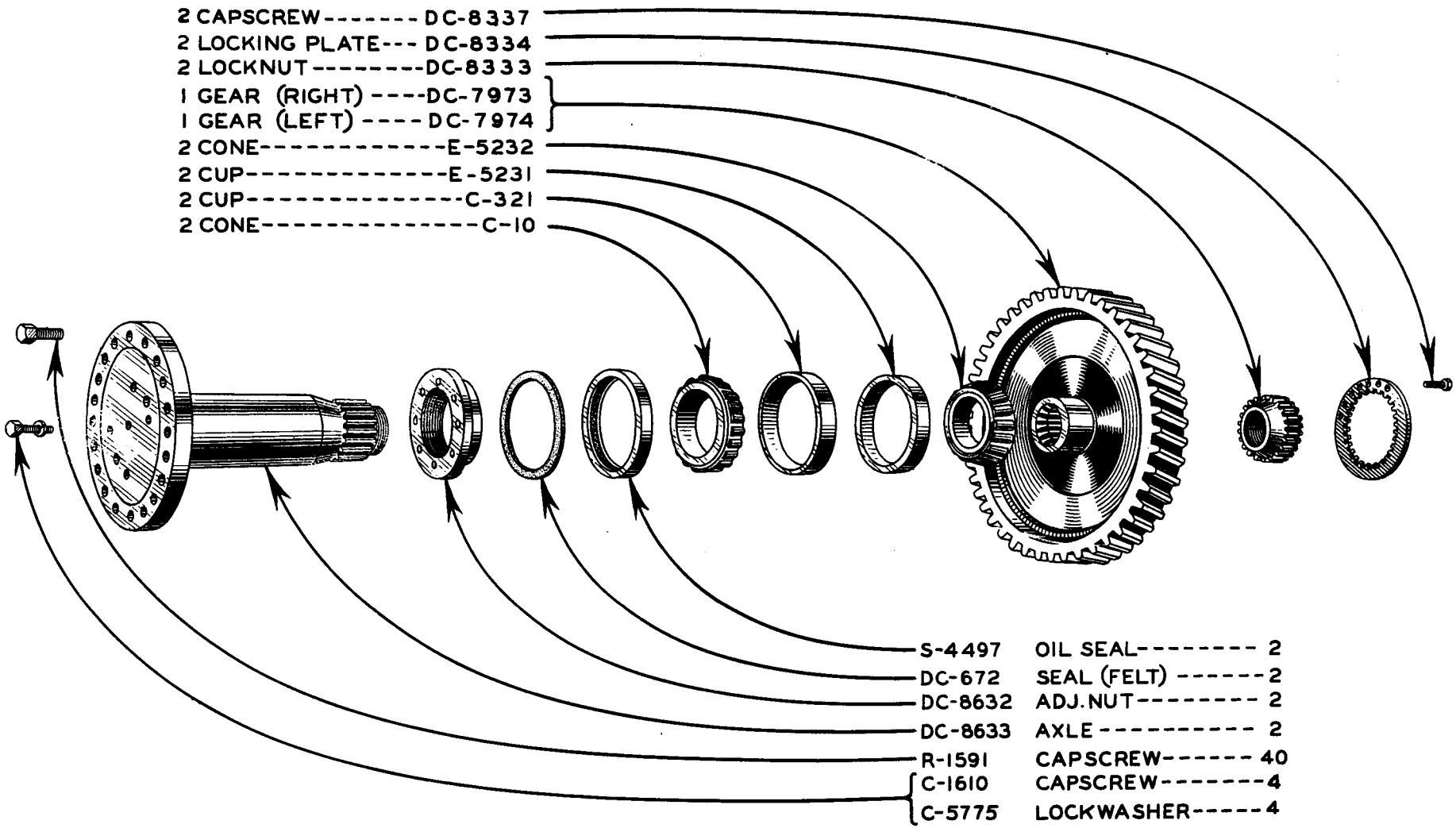

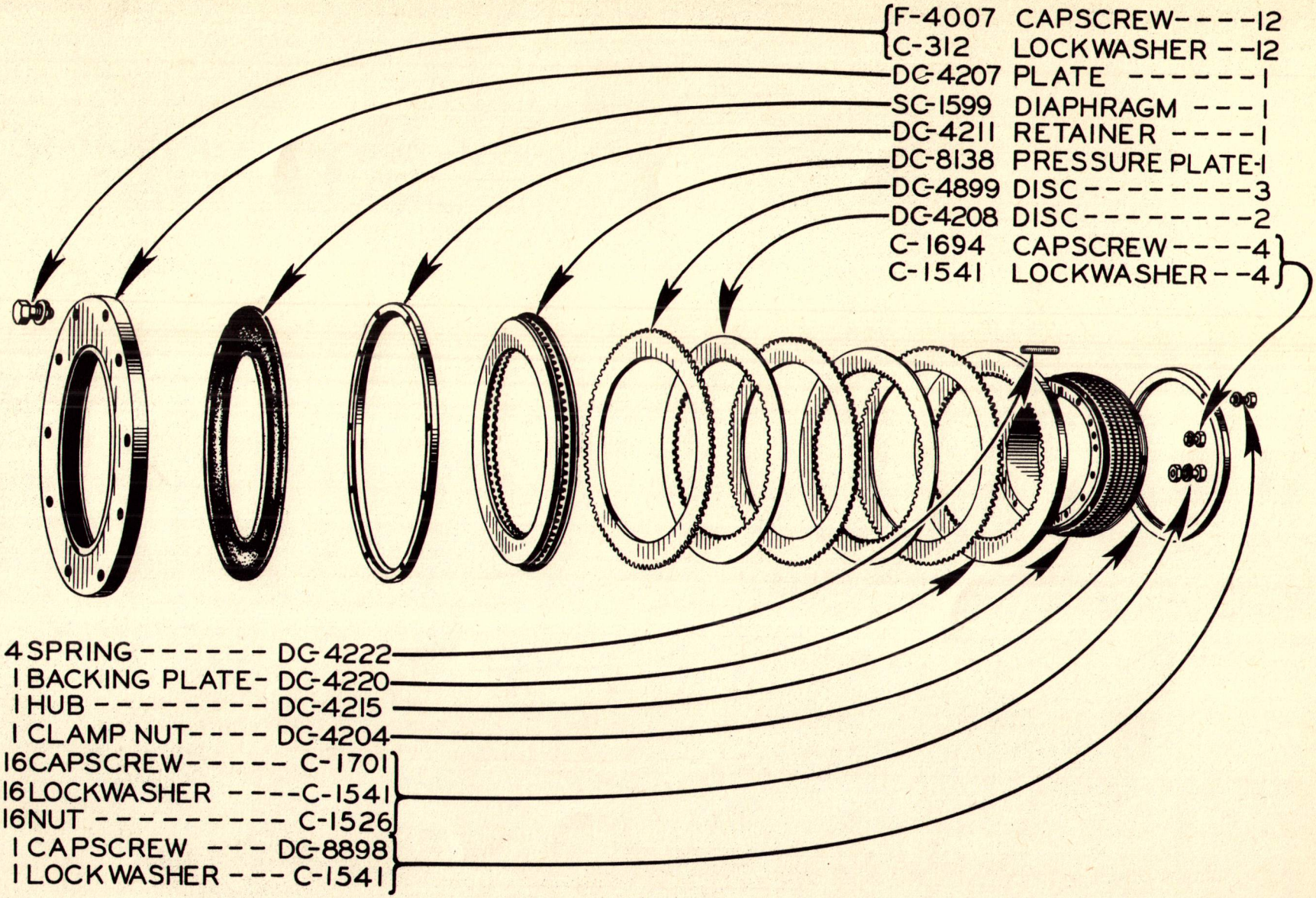

AIR BRAKE ASSEMBLY--DC-8143

AIR BRAKE ASSEMBLY DC-4223

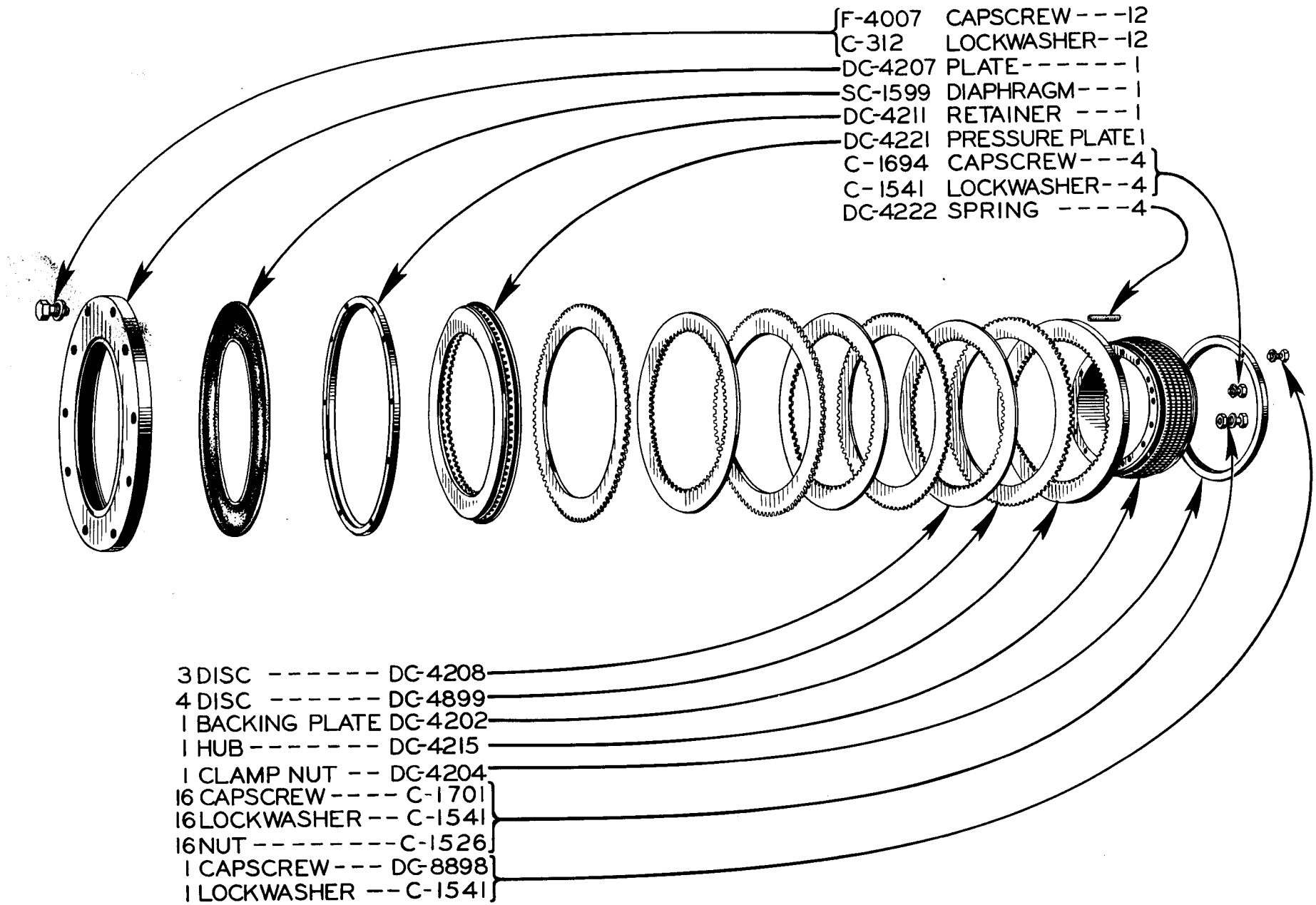

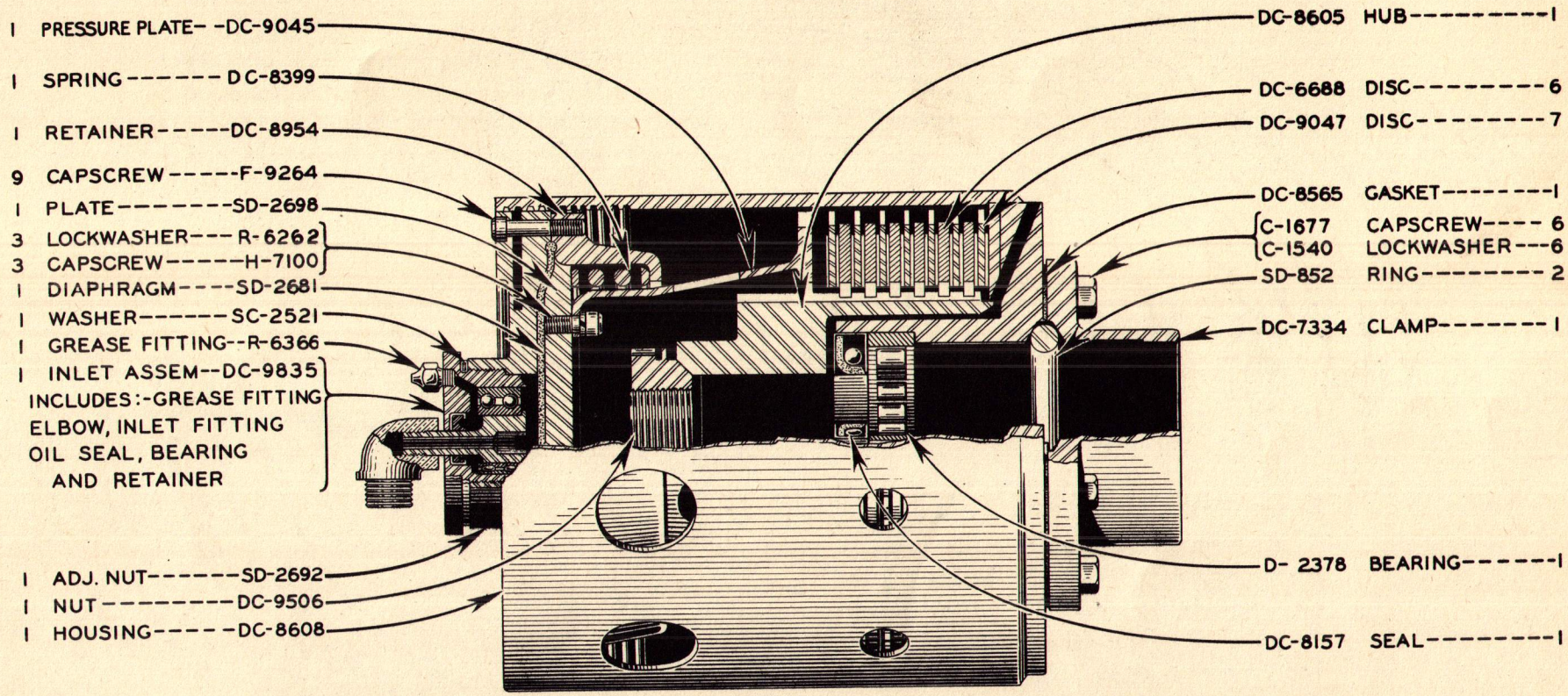

7"CLUTCH ASSEMBLY DC-9845

7" CLUTCH ASSEMBLY DC-9845

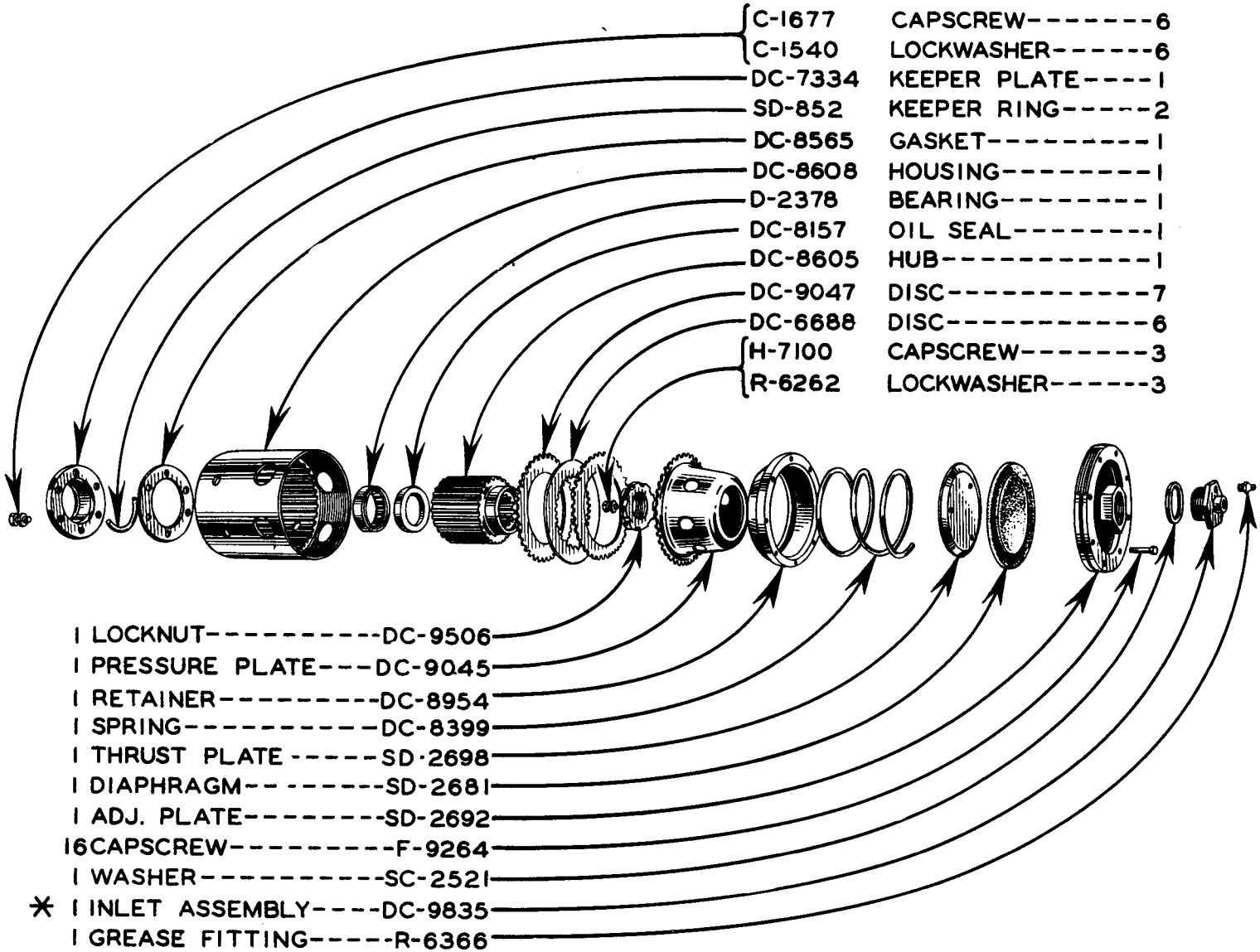

* INCLUDES GREASE FITTING, ELBOW, INLET FITTING OIL SEAL, BEARING AND RETAINER

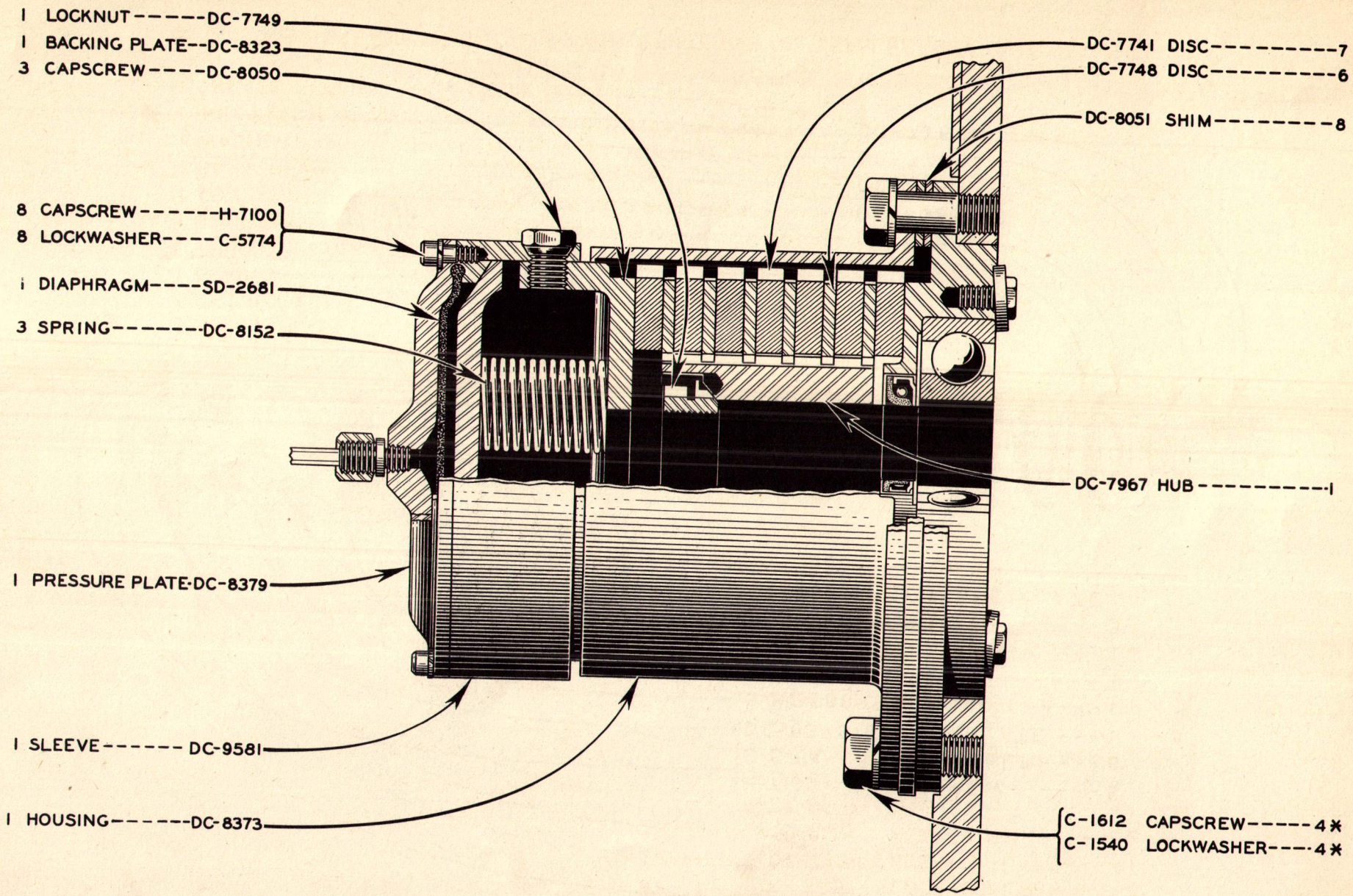

* NOT INCLUDED IN ASSEMBLY

PARKING BRAKE ASSEMBLY DC-9582

ALWAYS GIVE SERIAL NUMBER WHEN ORDERING PARTS.

PARKING BRAKE ASSEMBLY DC-9582

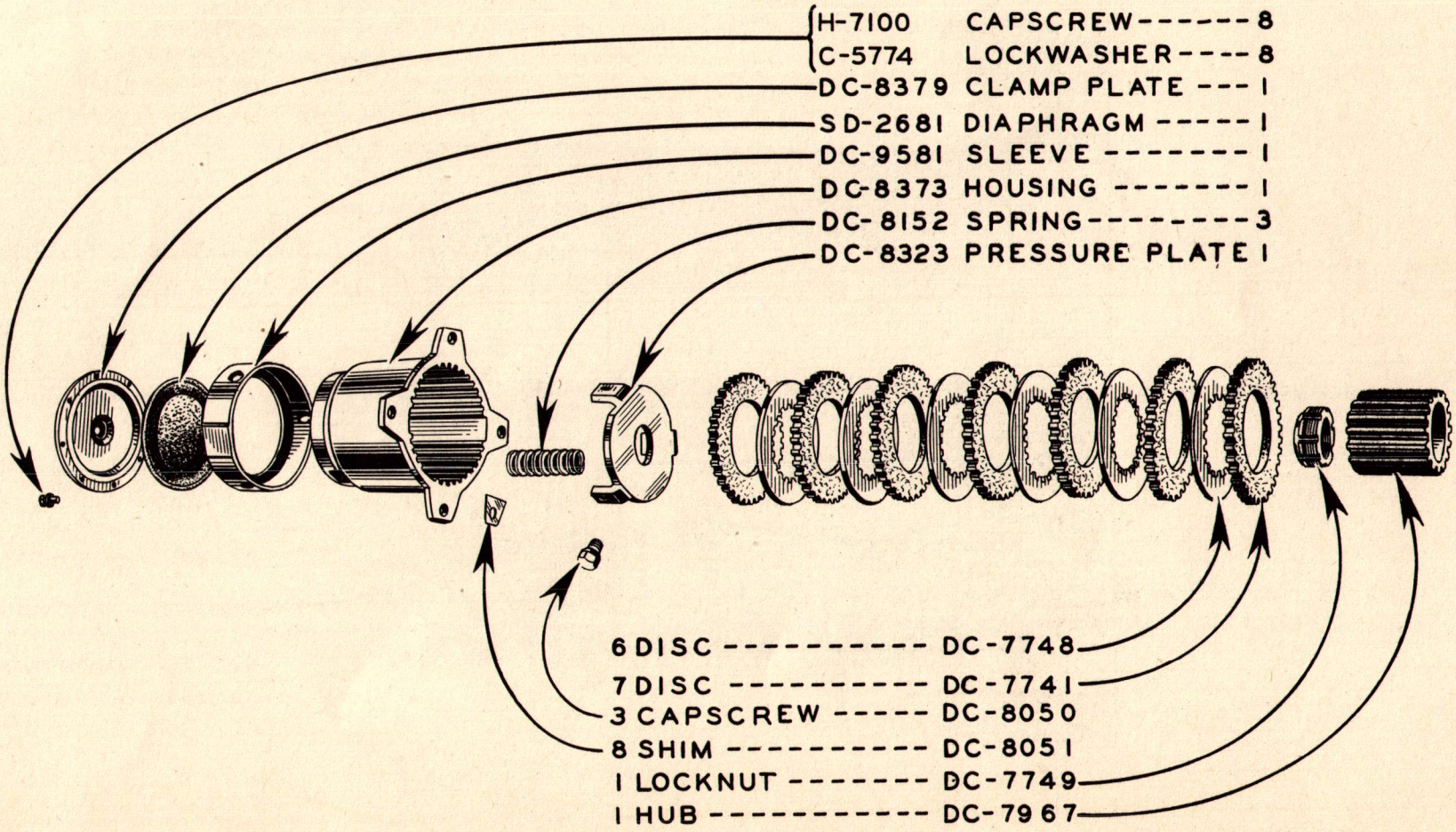

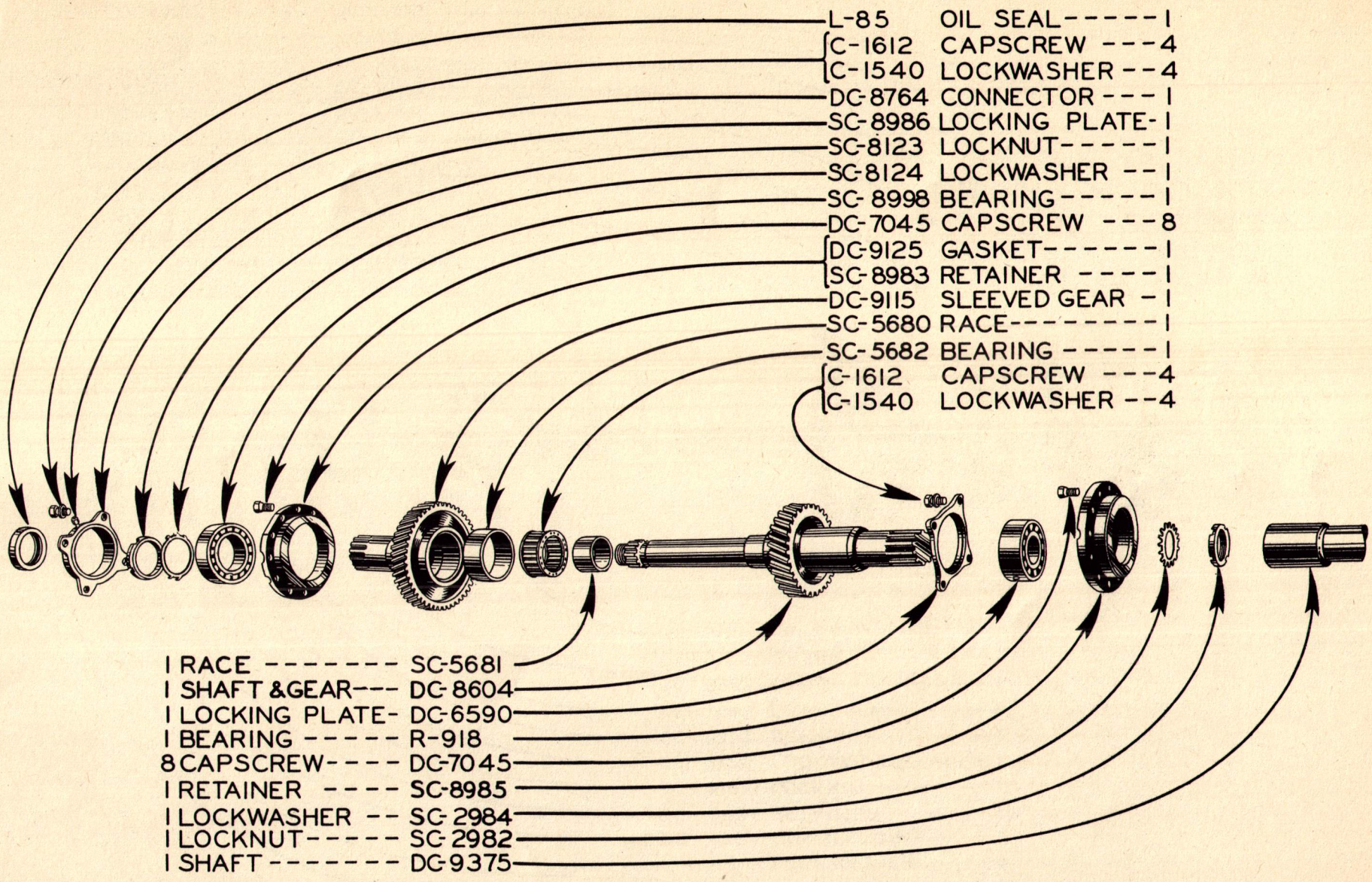

ENGINE SHAFT GROUP

COMPOUND SHAFT GROUP

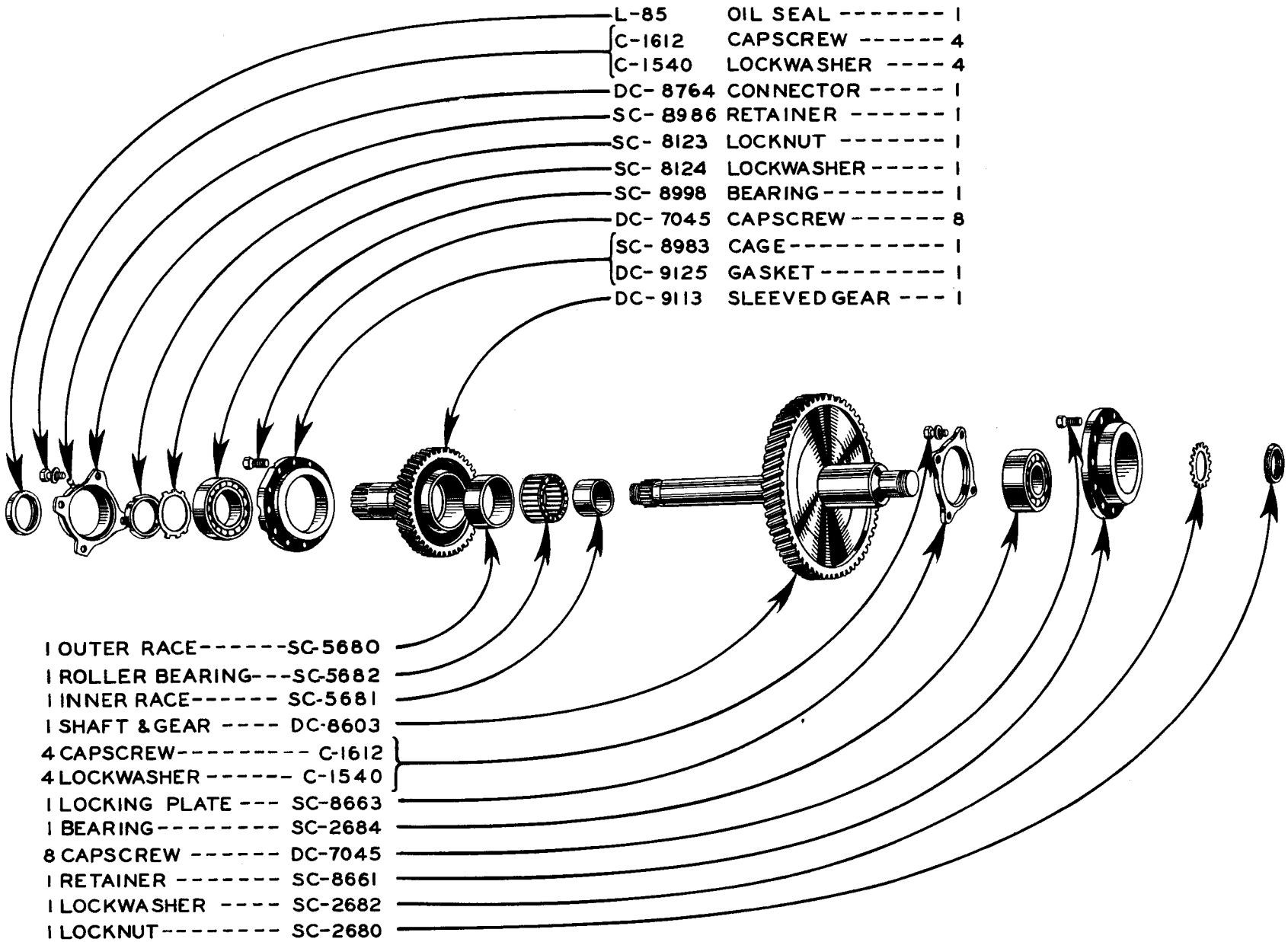

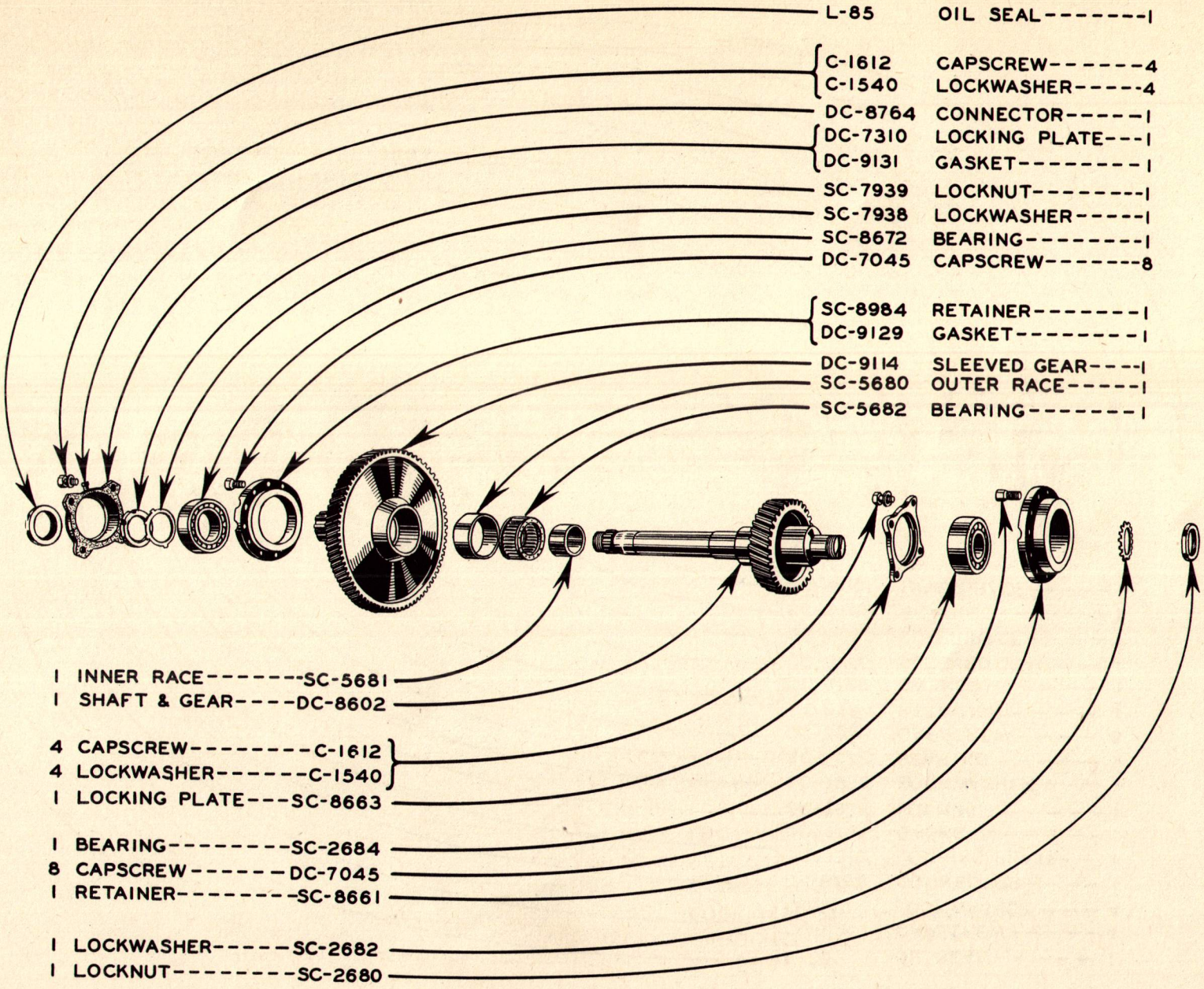

LOW FORWARD SHAFT ASSEMBLY

LOW REVERSE SHAFT GROUP

(EFFECTIVE WITH SERIAL NO. B6T-2060-D6 THROUGH B6T-2143-D6A.)

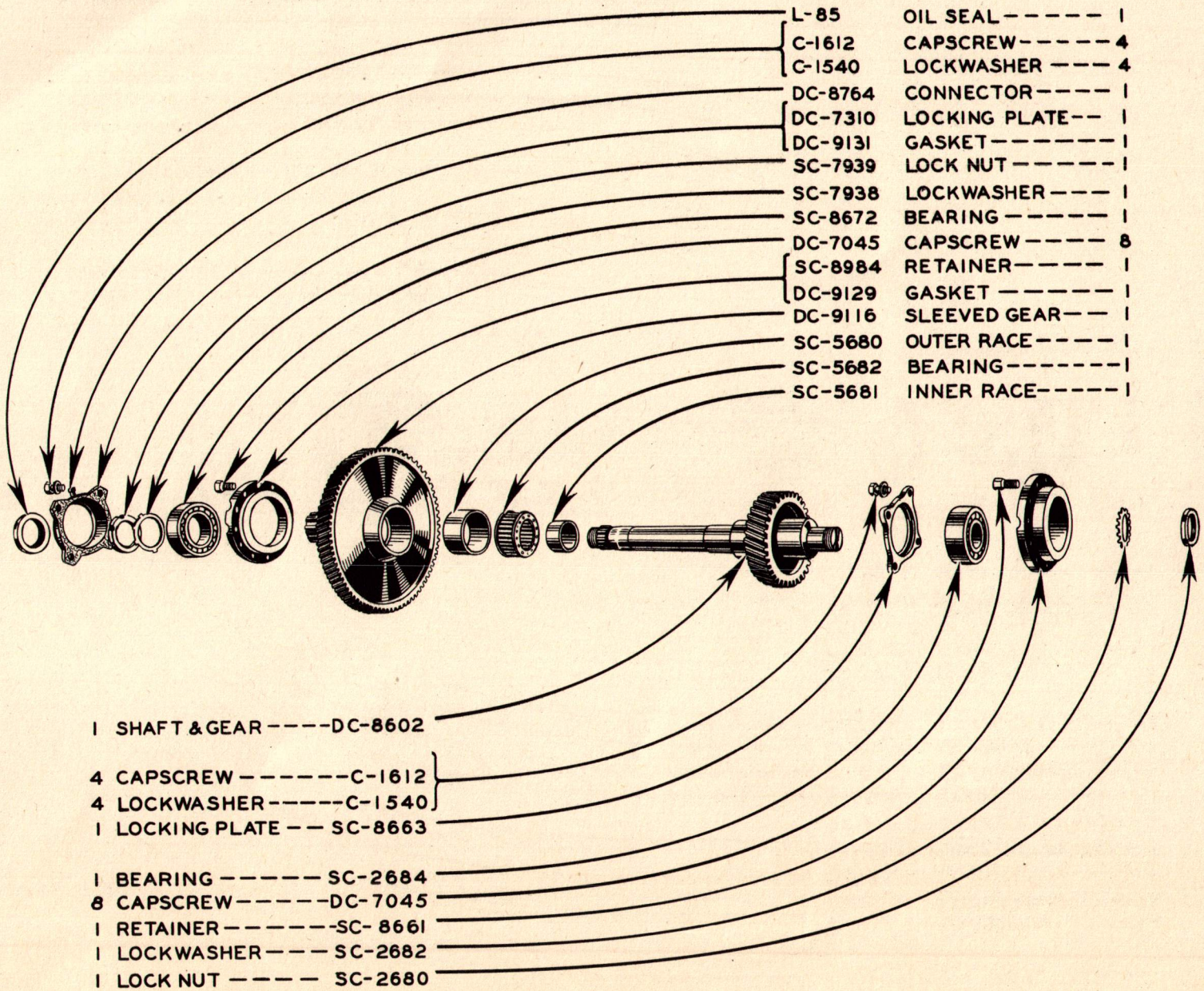

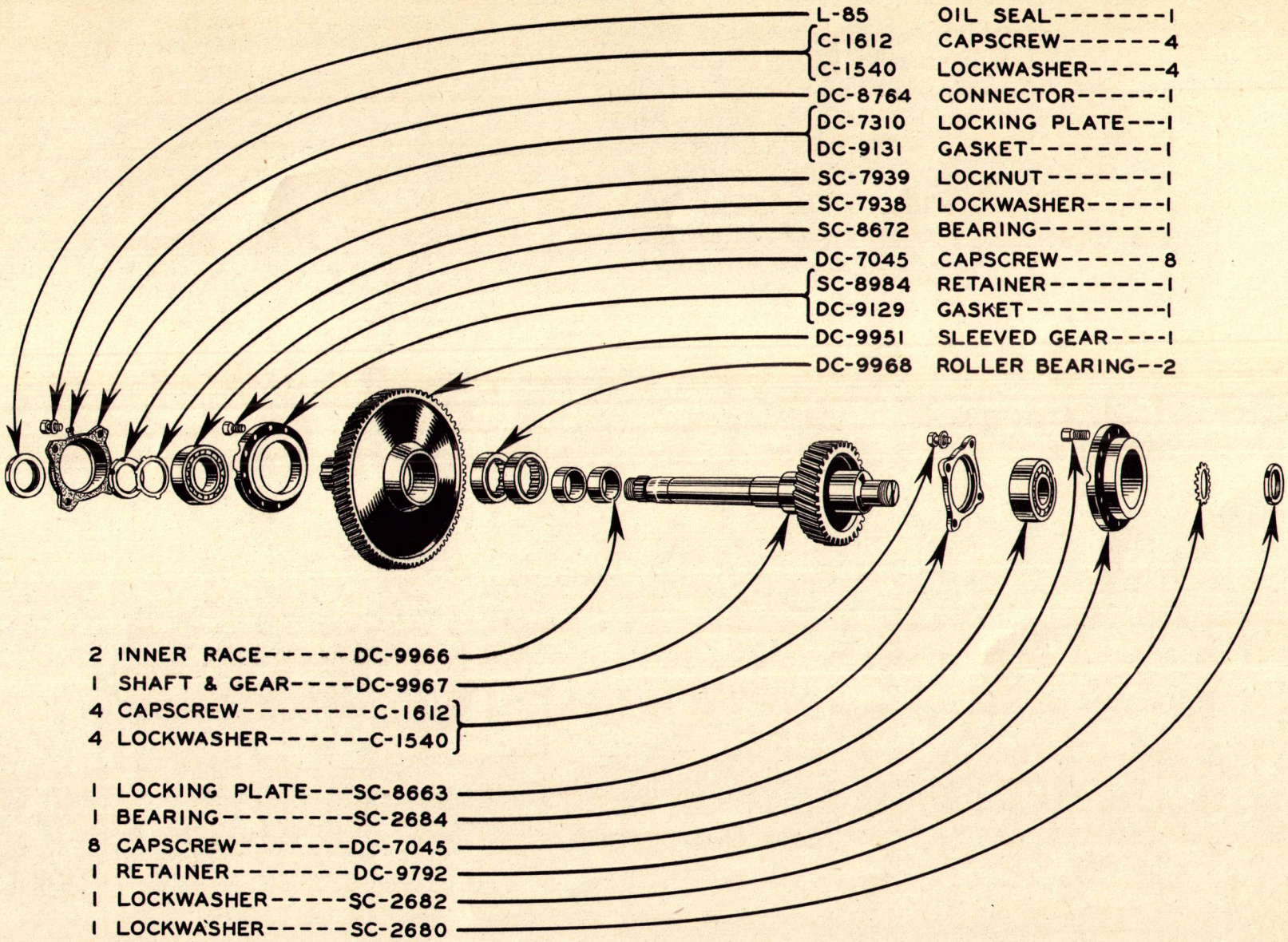

LOW REVERSE SHAFT GROUP

(EFFECTIVE WITH SERIAL NO.B6T-2144-D6B & UP)

OUTPUT SHAFT GROUP

* SOLD ONLY AS PART OF ASSEMBLY SD-5412, PINION & RING GEAR SET.

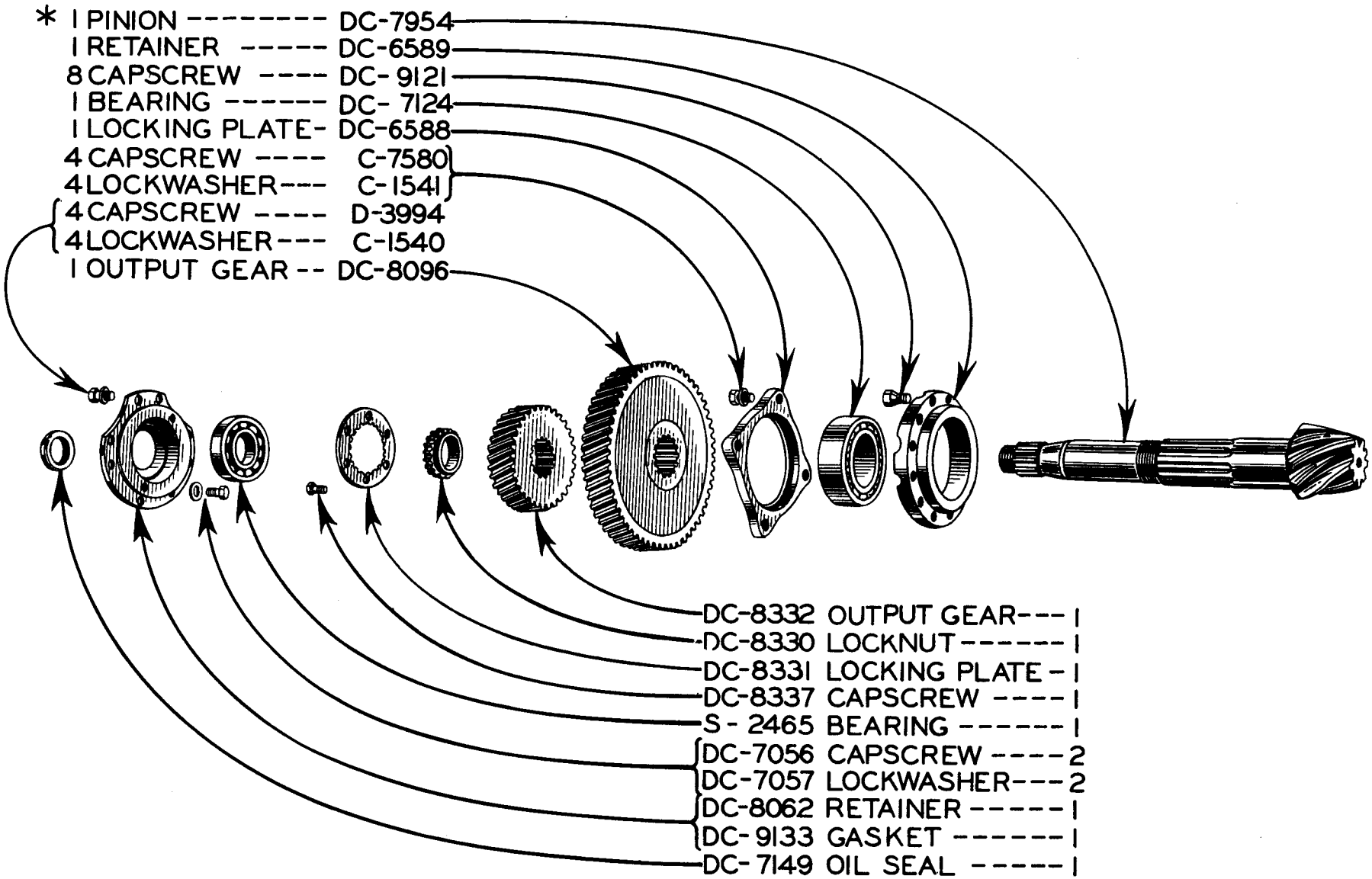

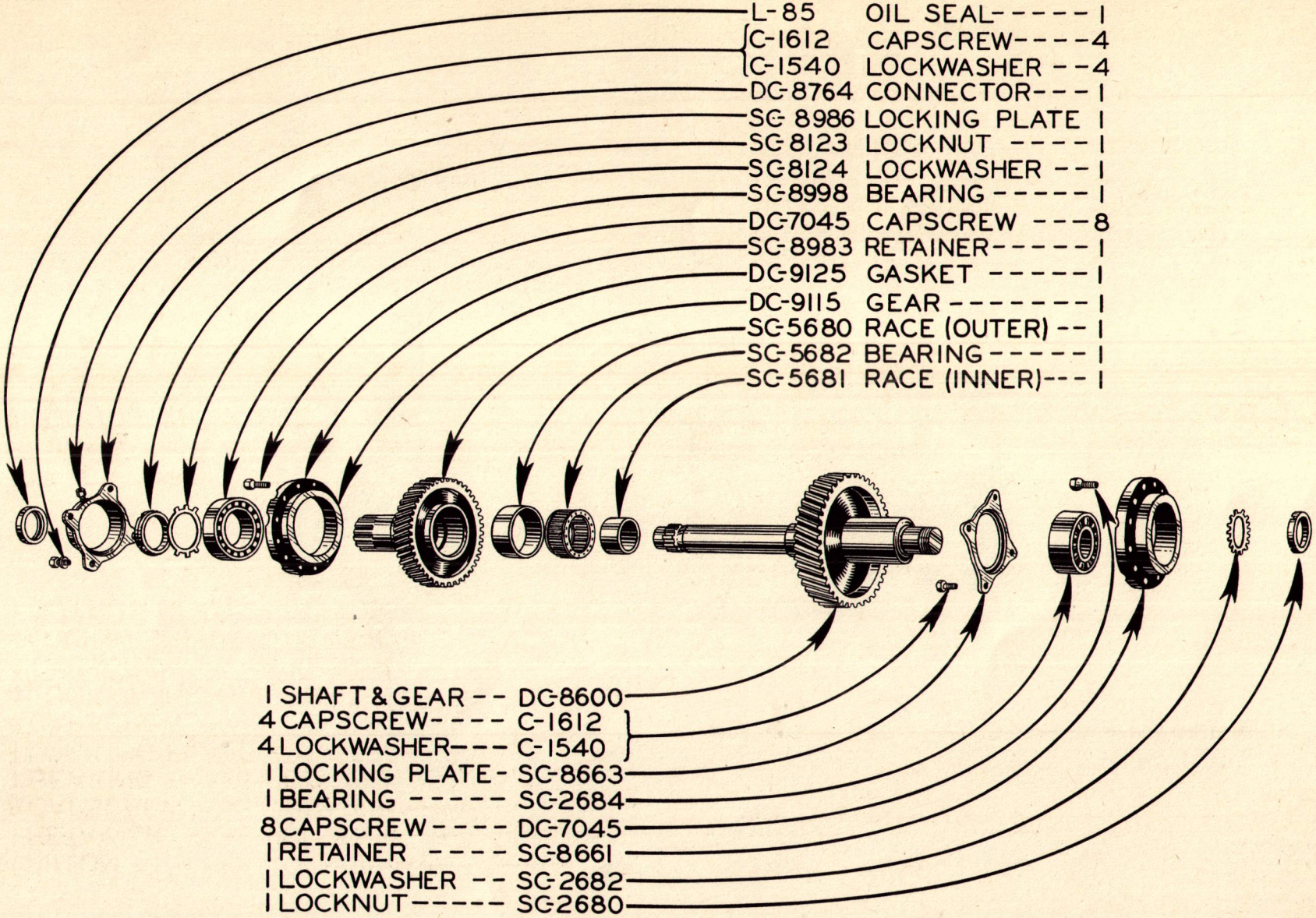

HIGH FORWARD SHAFT GROUP

OIL PUMP GROUP

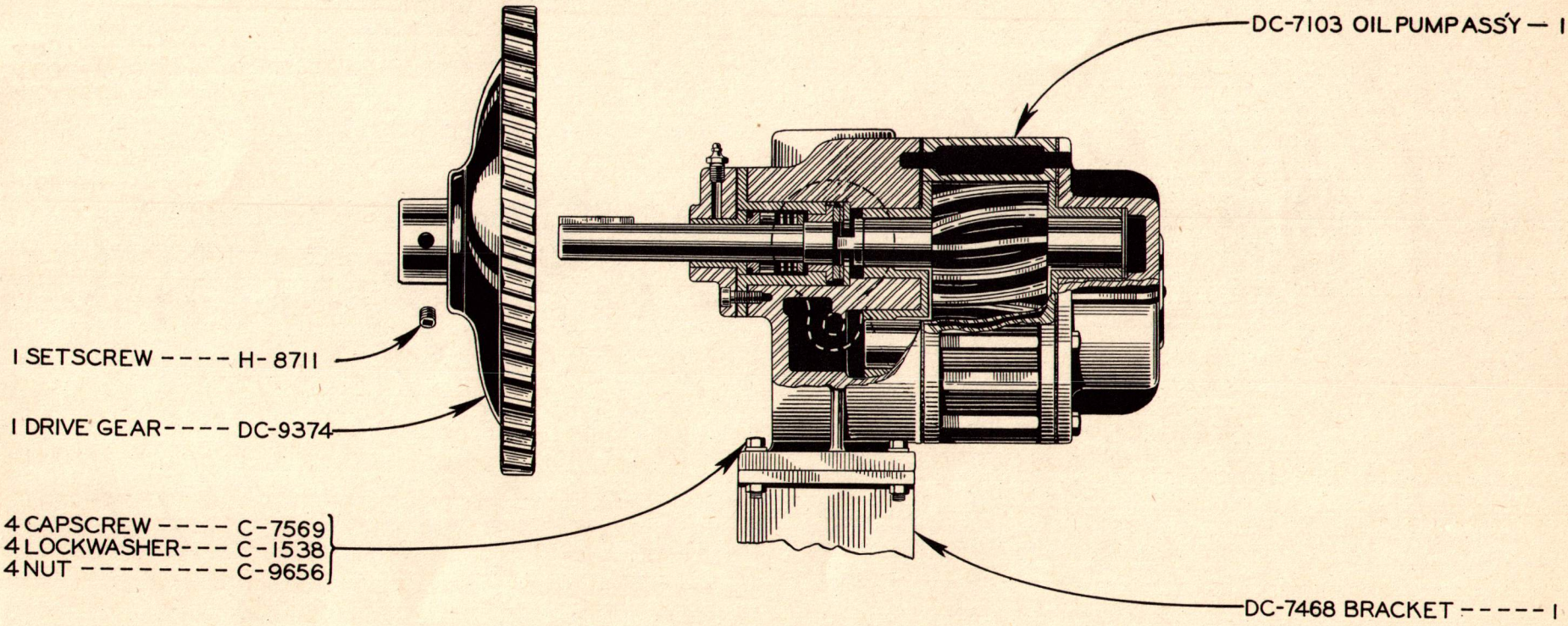

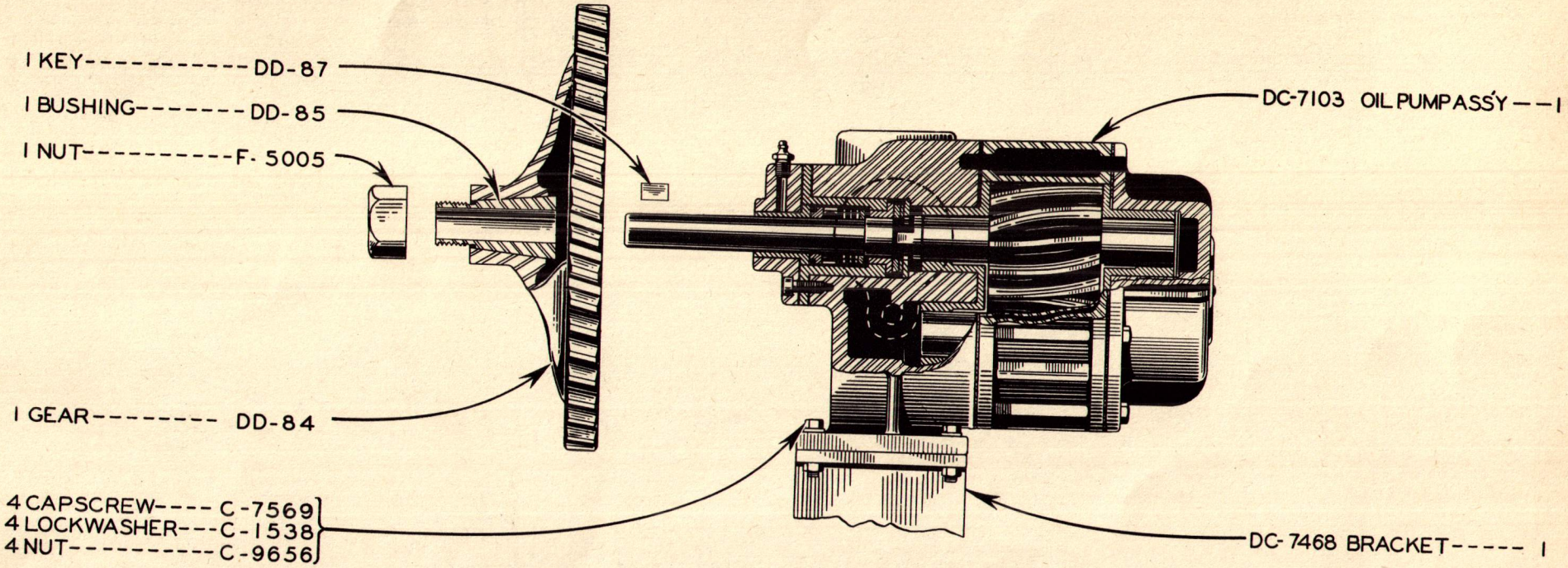

OIL PUMP GROUP

PIPING GROUP

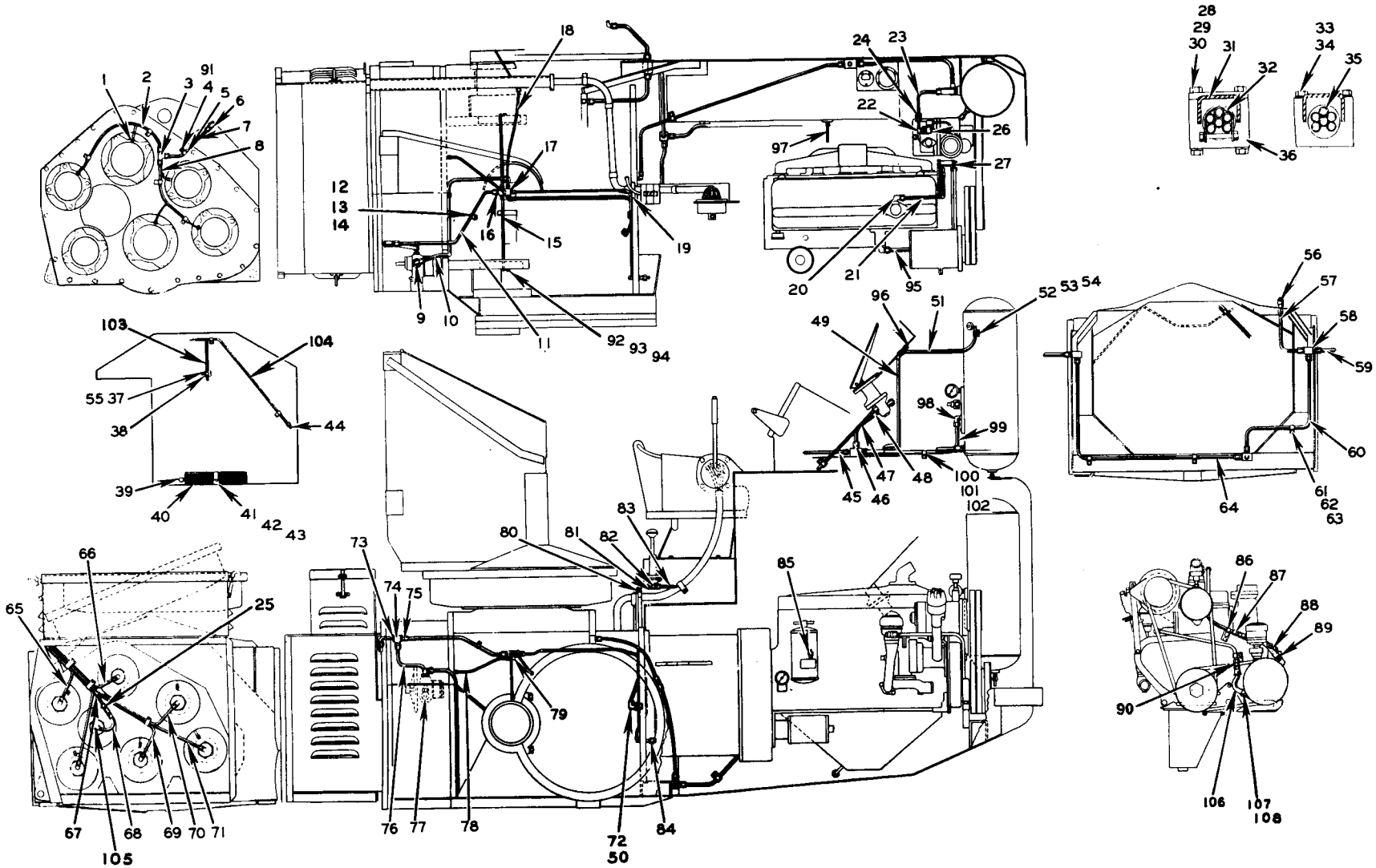

Item No.	Part No.	Description	Quantity
1	DC-8764	Connector	5
2	DC-9768	Oil Line Assembly — Transmission Bearing	1
3	DC-9771	Tee	1
4	DC-5035	Screw	5
5	DC-8163	Spring Clamp	5
6	DC-4058	Elbow	1
7	DC-9773	Oil Line Assembly — Transmission Bearing Supply	1
8	DC-9770	Oil Line Assembly — Transmission Bearing	1
9	DC-3599	Elbow	2
10	DD-458	Oil Line Assembly — Strainer to Pump	1
11	DD-460	Oil Line Assembly — Differential & Final Drive	1
12	DC-5035	Screw	4
13	C-5774	Lockwasher	4
14	DC-5036	Clamp	4
15	DC-9247	Oil Line Assembly — Final Drive Bearing	2
16	DC-2798	Connector	3
17	DC-3600	Connector	7
18	DC-9245	Oil Line Assembly — Differential Supply	1
19	DC-9498	Clamp	1
20	DC-3599	Elbow	2
21	DD-466	Water Line Assembly — Compressor Outlet	1
22	DD-497	Air Line Assy. — Compressor to Air Tank	1
23	DC-9780	Air Line Assy. — Compressor to Air Tank	1
24	DC-3606	Connector	7
25	DC-3606	Connector	1
26	DC-4058	Elbow	1
27	DC-9759	Clamp Assembly	1
28	C-1520	Nut	2
29	C-1538	Lockwasher	2
30	H-9911	Capscrew	2
31	DC-9753	Cover	1
32	DC-9782	Clamp Assembly	10
33	C-1599	Capscrew	4
34	C-1538	Lockwasher	4
35	DD-486	Grommet	3
36	DC-9498	Clamp	1
37	DC-9760	Screw	4
38	DC-8164	Clamp	4
39	DC-3599	Elbow	1
40	DC-4061	Strainer	1
41	DC-5035	Screw	1
42	C-5774	Lockwasher	1
43	DC-5697	Clamp	1
44	DC-3602	Elbow	1
45	DD-478	Air Line Assembly—3 Way Connector to Case Front Plate	1
46	DC-2798	Connector	3
47	DD-476	Air Line Assembly — Air Valve to 3 Way Connector	1
48	DD-474	Air Line Assembly — Air Valve to 3 Way Connector in Case	1
49	DD-470	Tubing—Fuel Gauge Wire	1
50	DC-5608	Nipple	1
51	DD-471	Tubing—Head Lamp Wire	1
52	DC-5035	Screw	1
53	C-5774	Lockwasher	1
54	DC-5036	Clamp	2
55	S-3287	Lockwasher	4
56	C-5770	Pipe Plug	1
57	DC-8796	Air Line Assy. — Supply Line to Scraper	1
58	DC-2798	Connector	9
59	DC-8790	Air Line Assy. — Supply Line to Left Wheel Brake	2
60	DC-8786	Air Line Assy. — Left Wheel & Scraper Supply	1
61	DC-5035	Screw	3
62	DC-5036	Clamp	3
63	C-5774	Lockwasher	3
64	DC-8785	Air Line Assy.—Right Wheel Brake Supply	1
65	DD-194	Air Line Assy.—High Forward Clutch Supply	1
66	DD-198	Air Line Assy.—Low Reverse Clutch Supply	1
67	DD-196	Air Line Assy. — Parking Brake Supply	1
68	DC-9780	Air Hose Assembly—Parking Brake	1
69	DD-450	Air Line Assy.—Low Forward Clutch Supply	1
70	DD-452	Air Line Assy. — Engine Shaft Clutch Supply	1
71	DD-454	Air Line Assy. — Compound Shaft Clutch Supply	1
72	DD-193	Elbow	1
73	R-3182	Nipple	1
74	DC-5037	Tee	1
75	DC-2798	Connector	2
76	DD-456	Oil Line Assembly — Oil Pump to Tee	1
77	H-3018	Reducing Bushing	2
78	DD-484	Oil Line Assembly — 6 Way Connector to Low Reverse Bearing	1
79	DC-3602	Elbow	2
80	DD-462	Air Line Assy. — Case to Parking Brake Valve	1
81	DC-9229	Tee	1
82	DC-3606	Connector	3
83	DD-464	Air Line Assembly — Parking Brake Valve to Control Valve	1
84	SC-3633	Oil Pressure Switch	1
85	SC-3634	Oil Pressure Switch—Engine	1
86	DC-9758	Clamp Assembly	1
87	DC-2798	Connector	2
88	DC-5739	Air Hose Assembly — Compressor	2
89	DC-3602	Elbow	1
90	DC-3606	Connector	1
91	C-5774	Lockwasher	5
92	DC-9760	Screw	2
93	S-3287	Lockwasher	2
94	DC-8164	Clamp	2
95	DD-468	Water Line Assembly—Compressor Outlet	1
96	DC-5004	Screw	1
97	DD-480	Fuel Line Assembly — Tank to Fuel Pump	1
98	DC-3599	Elbow	5
99	DD-472	Air Line Assembly — Air Tank to 3 Way Connector	1
100	DC-5035	Screw	4
101	DC-5036	Clamp	4
102	C-5774	Lockwasher	4
103	DD-492	Oil Line Assembly — 7 Way Connector to Generator Bearing	1
104	DD-490	Oil Line Assembly—7 Way Connector to Pressure Switch	1
105	S-2916	Elbow	1
106	DC-5740	Flexible Hose—Compressor	1
107	D-8866	Elbow	1
108	DC-221	Nipple	1

PIPING GROUP

14X32 WHEEL ASSEMBLY DC-9415

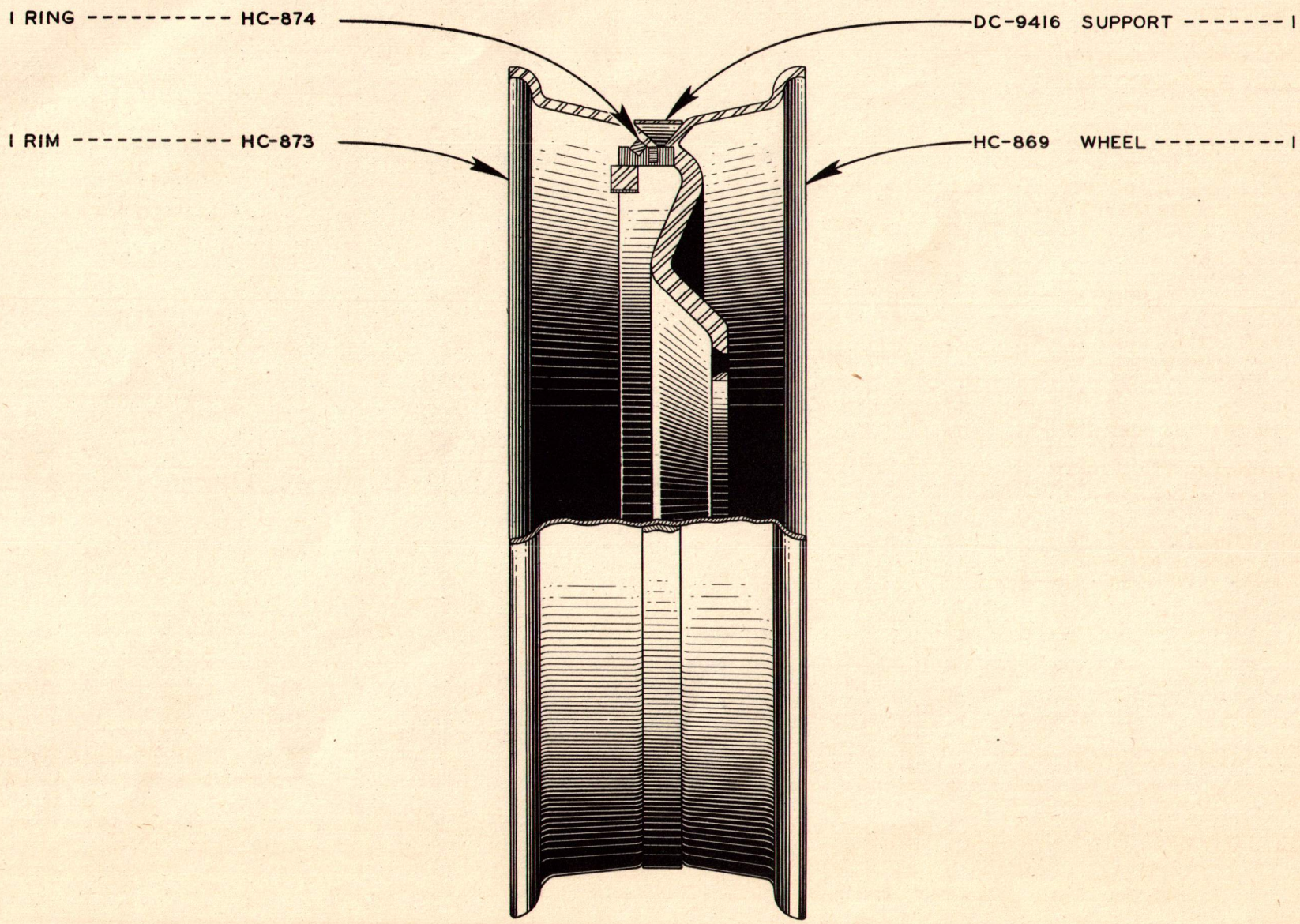

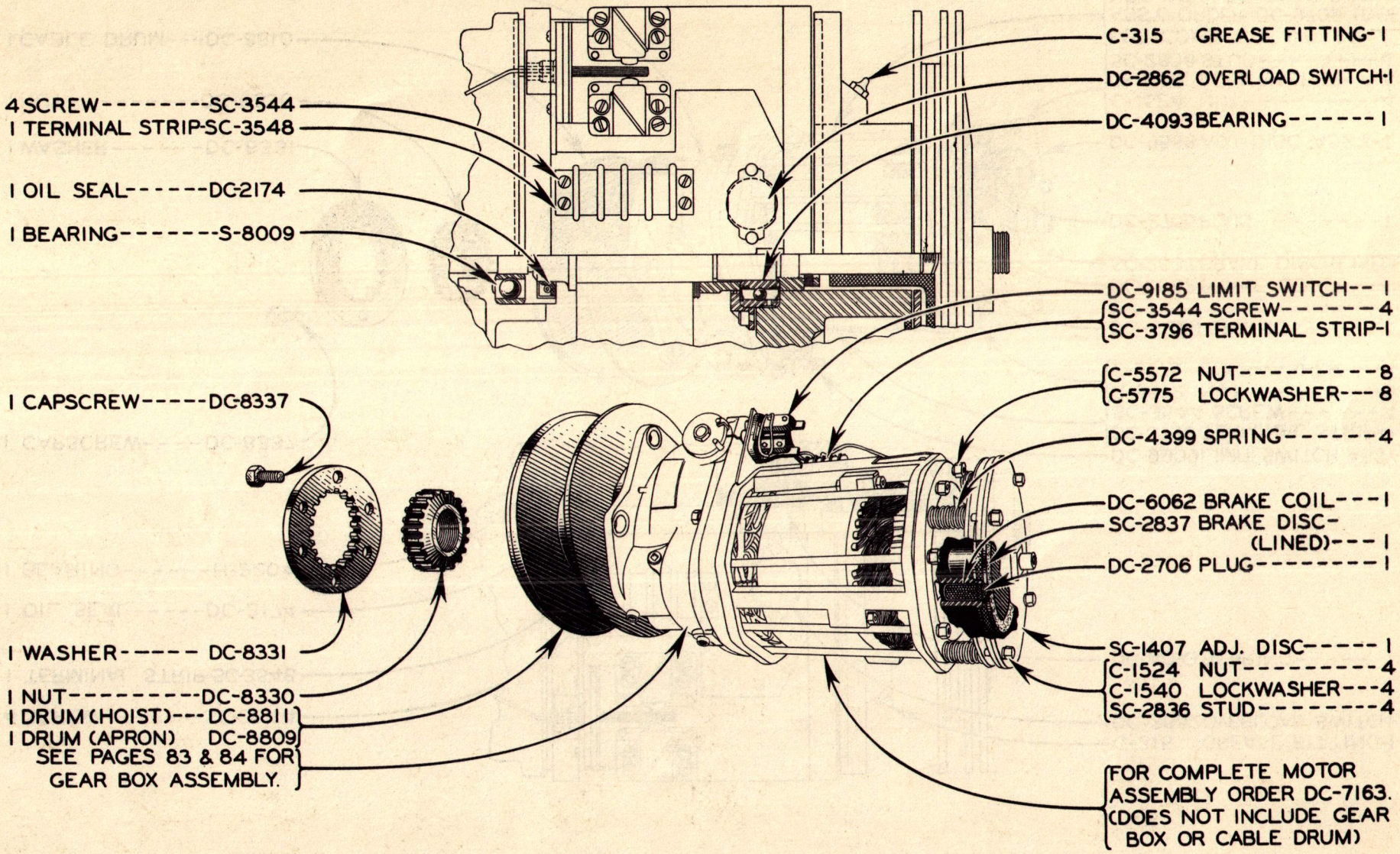

SCRAPER BODY LIFT & APRON LIFT MOTOR, GEAR BOX & CABLE DRUM

TAILGATE MOTOR, GEAR BOX & CABLE DRUM

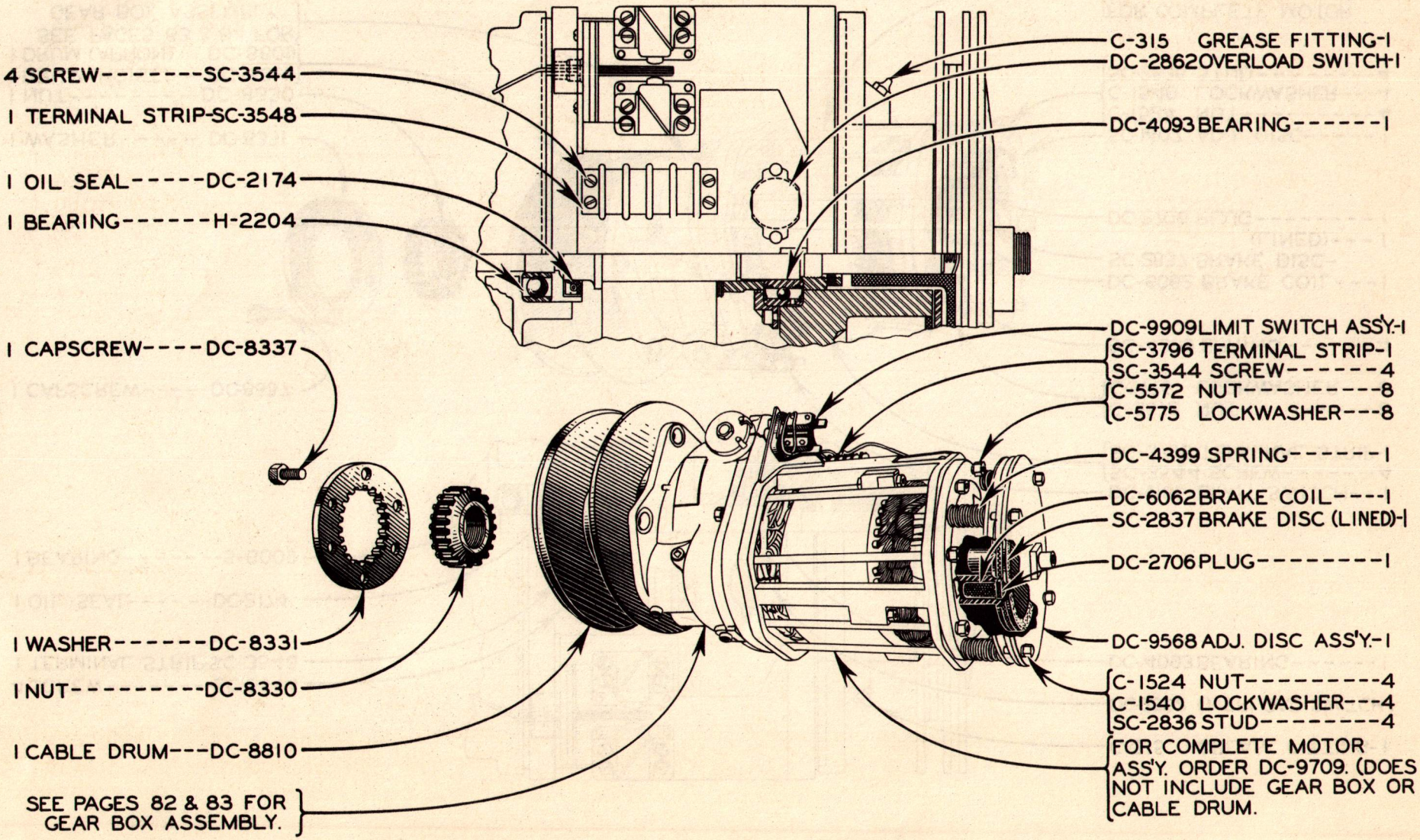

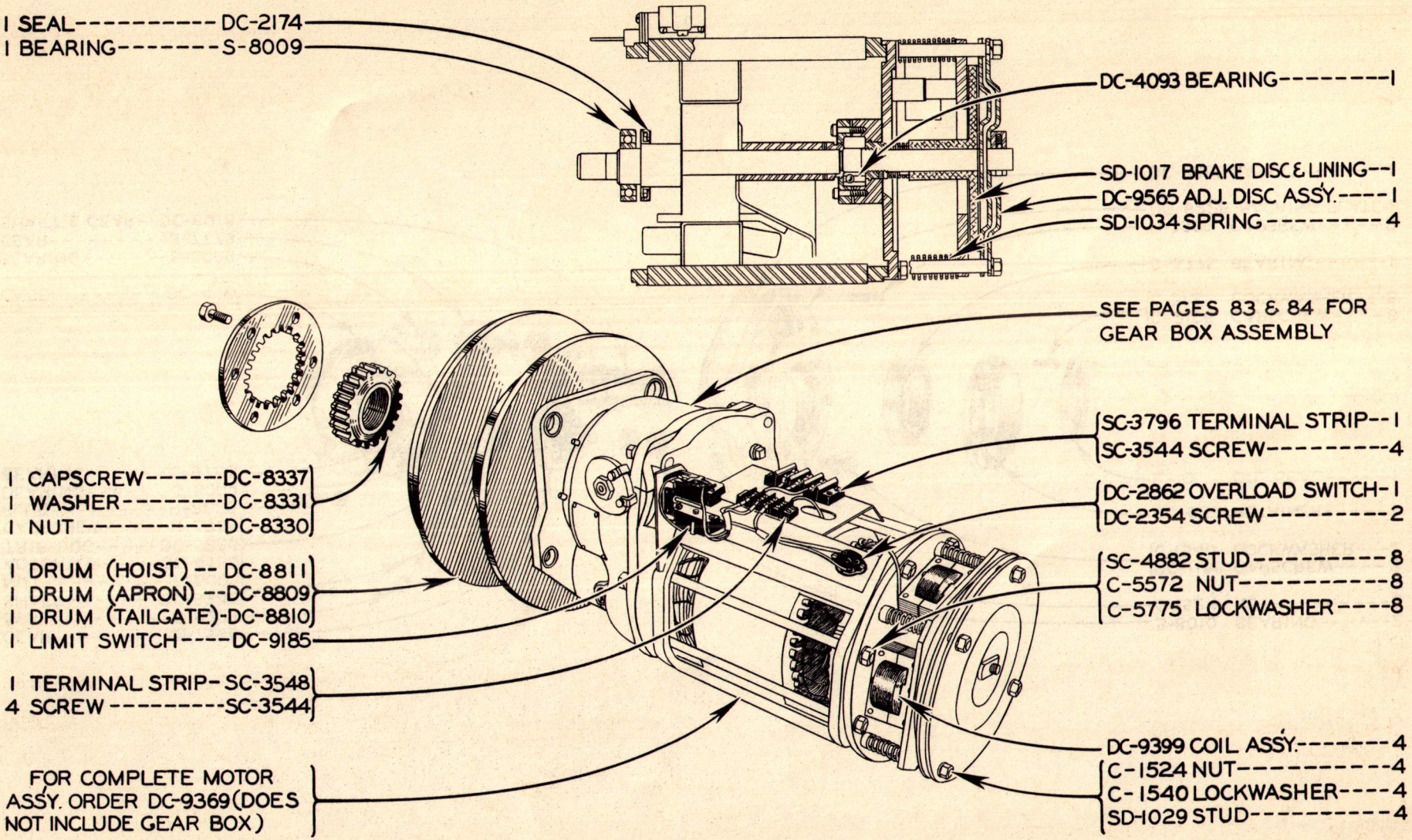

SCRAPER MOTOR, GEAR BOX & CABLE DRUM

GEAR BOX ASSEMBLY DC-6019

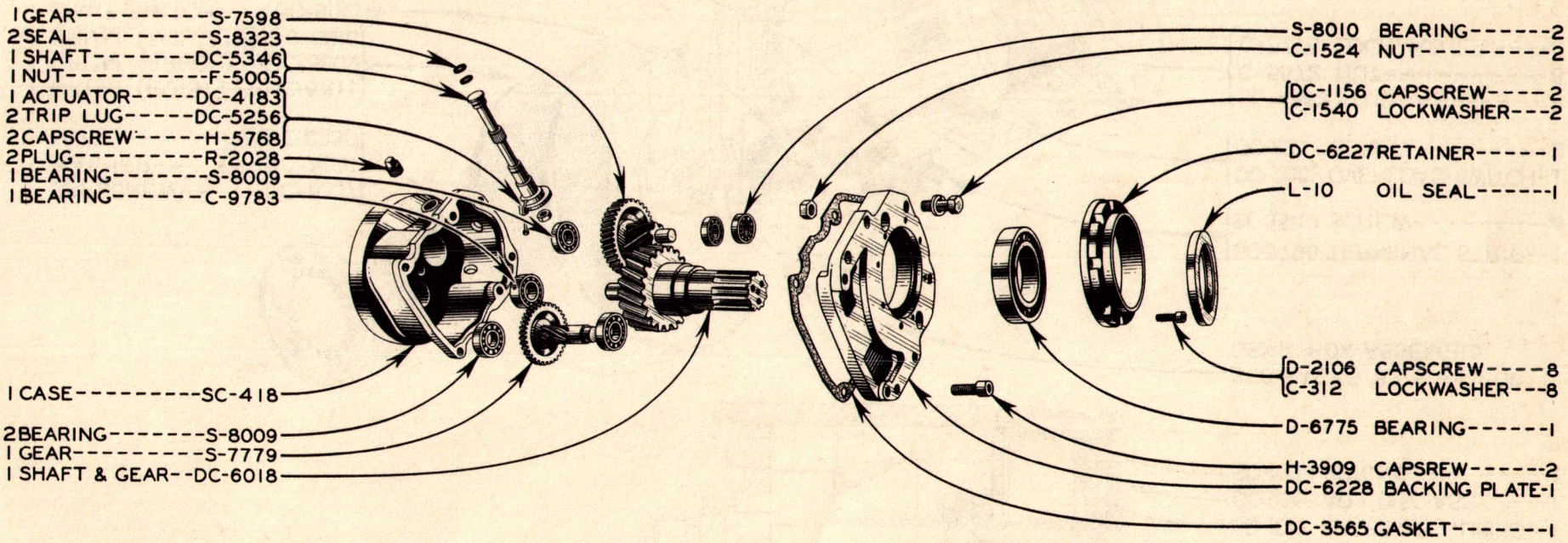

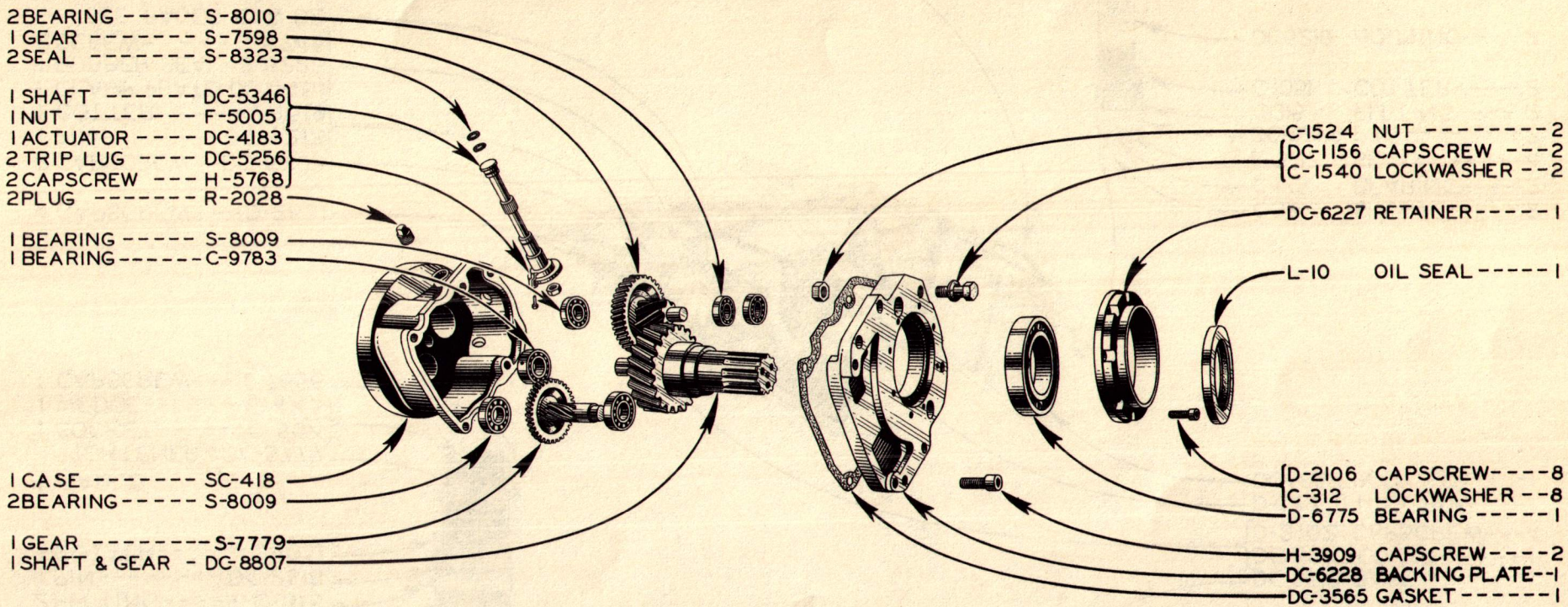

GEAR BOX ASSEMBLY--DC-8808
(FOR BODY LIFT, APRON LIFT & TAILGATE)

MAIN BODY GROUP

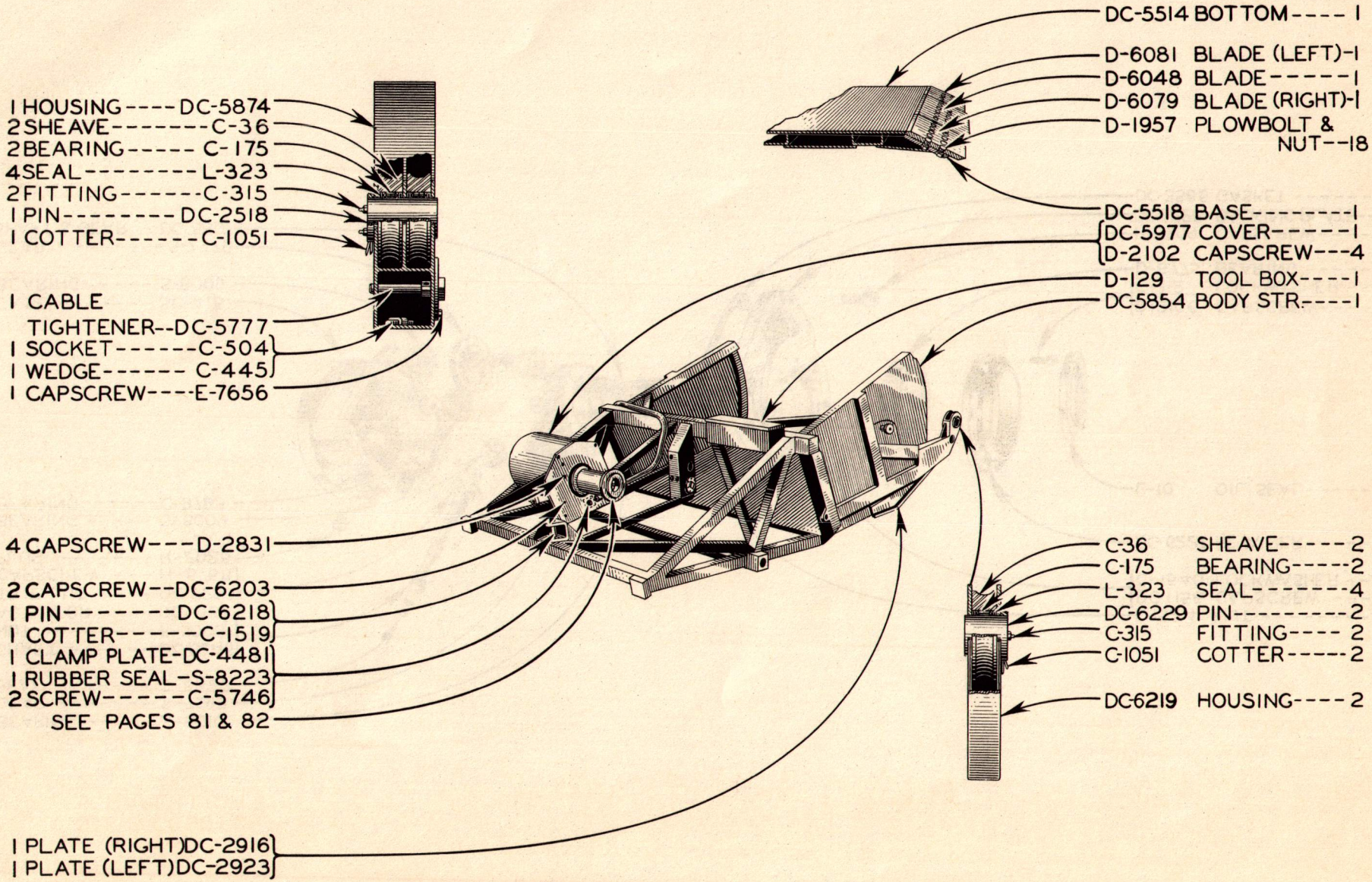

NOTE:
SEE PAGE 90 FOR
SCRAPER LIGHT.

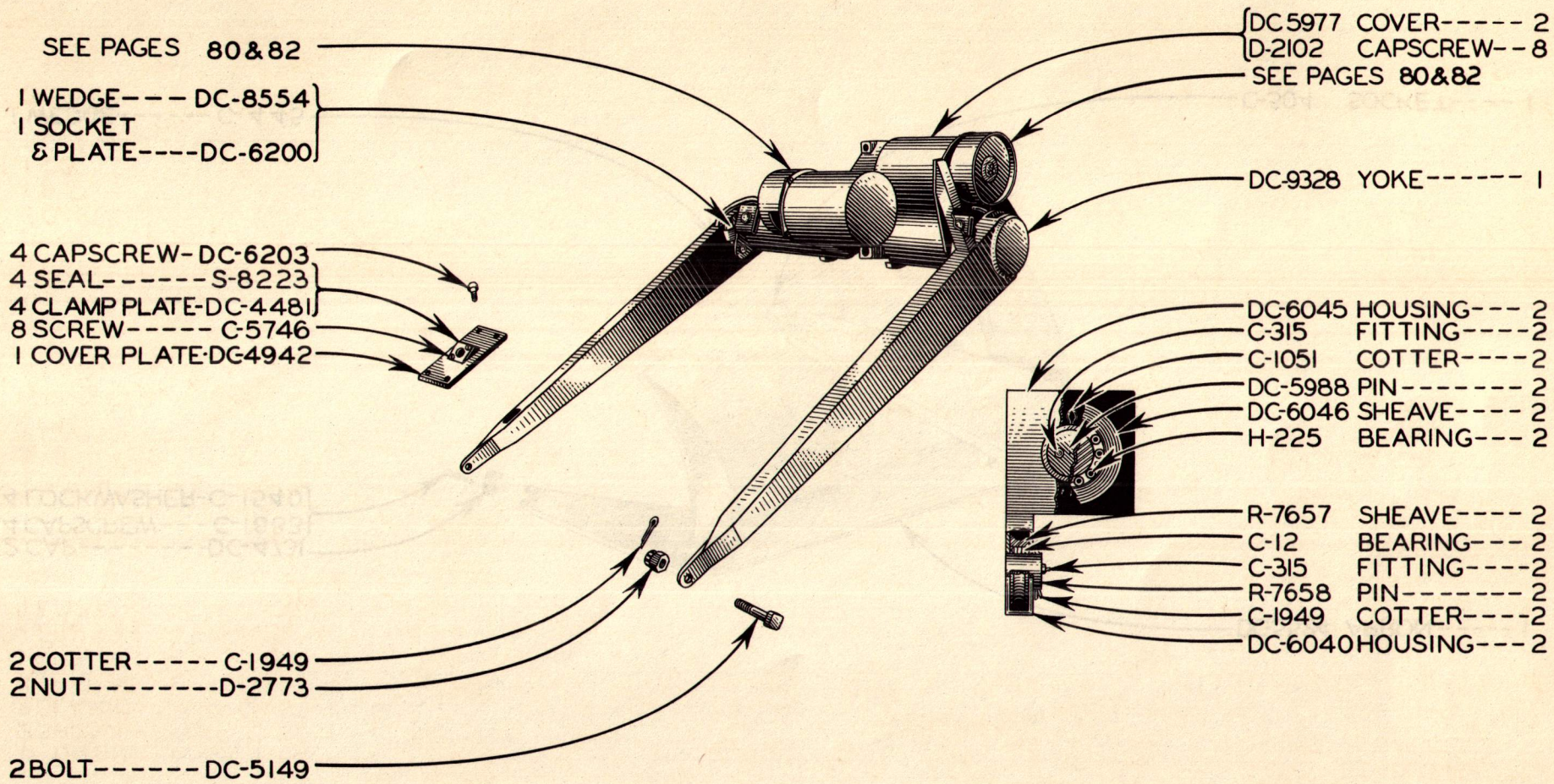

YOKE GROUP

APRON GROUP

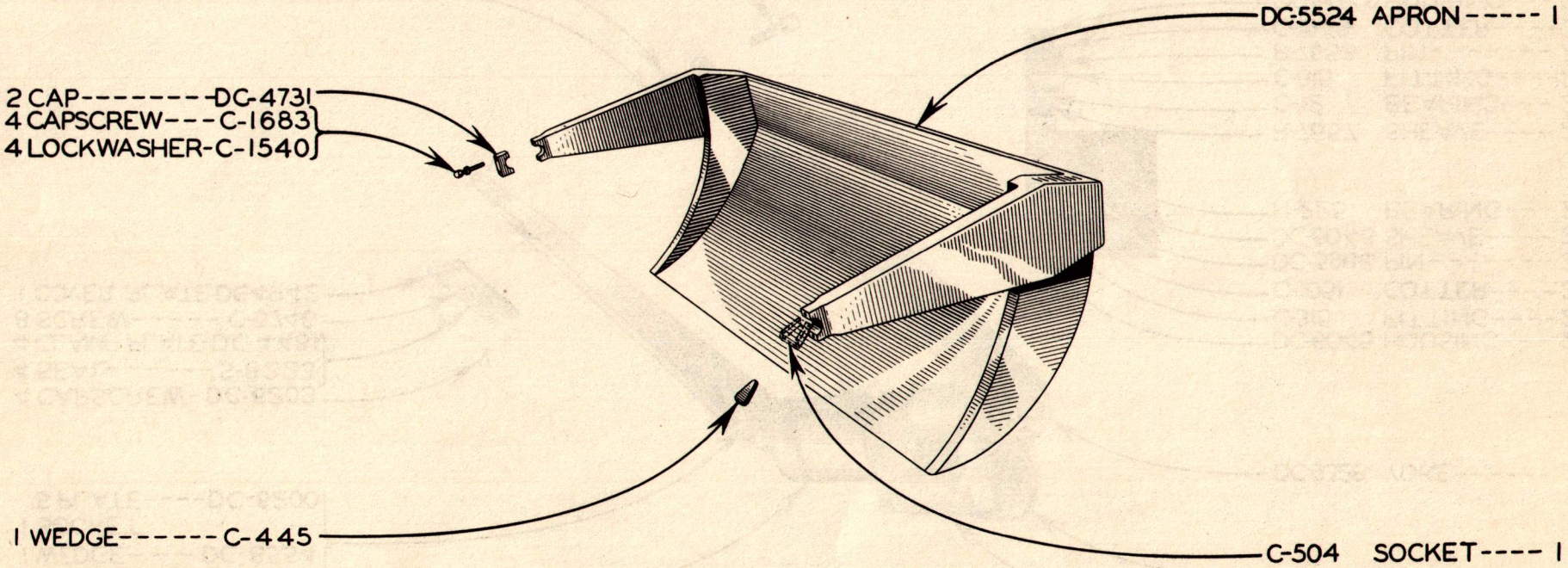
DC-5524 APRON----- 1
2 CAP-------DC-4731
4 CAPSCREW---C-1683
4 LOCKWASHER-C-1540
1 WEDGE------C-445
C-504 SOCKET---- 1

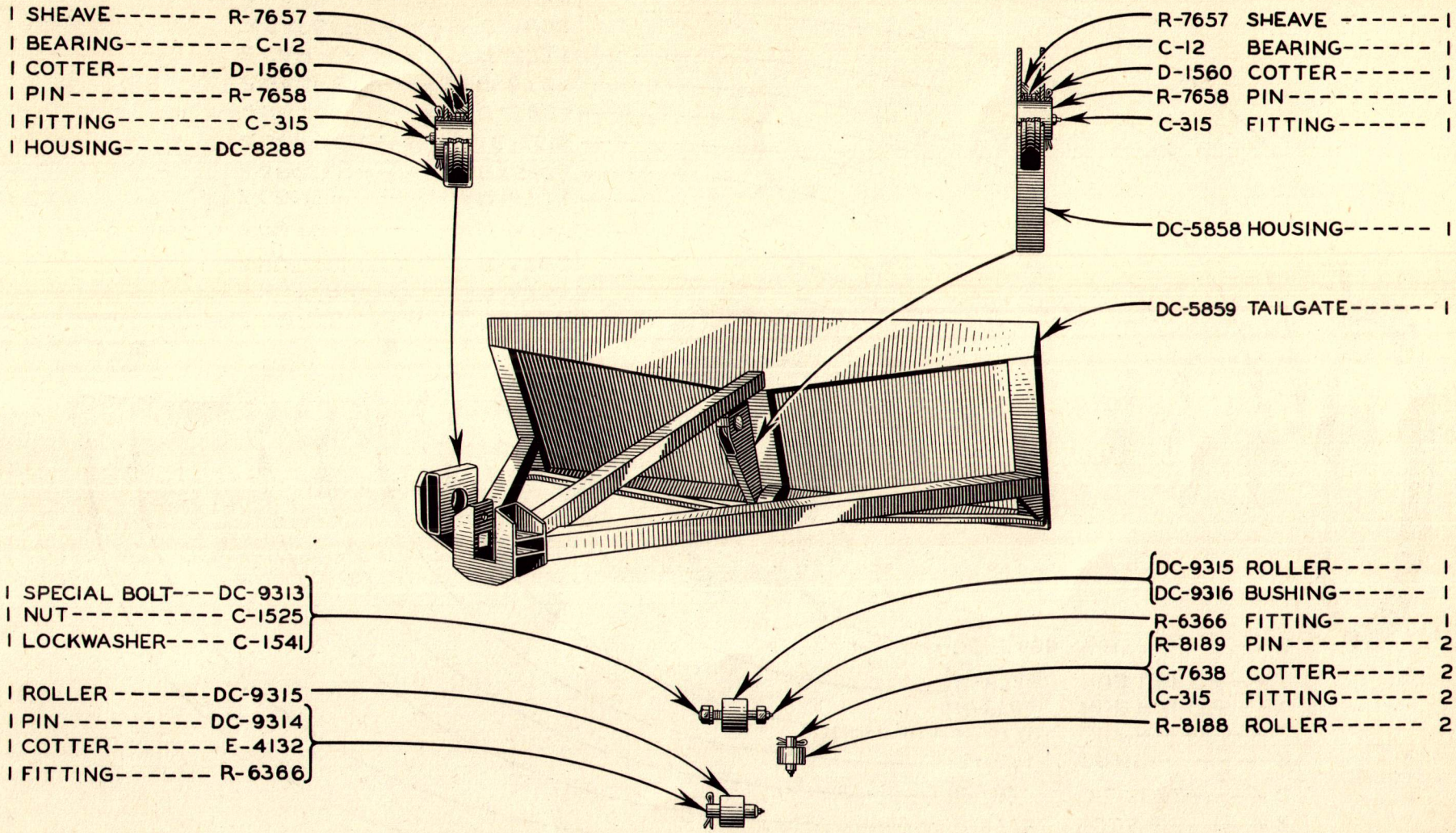

TAILGATE GROUP

SCRAPER WHEEL ASSEMBLIES

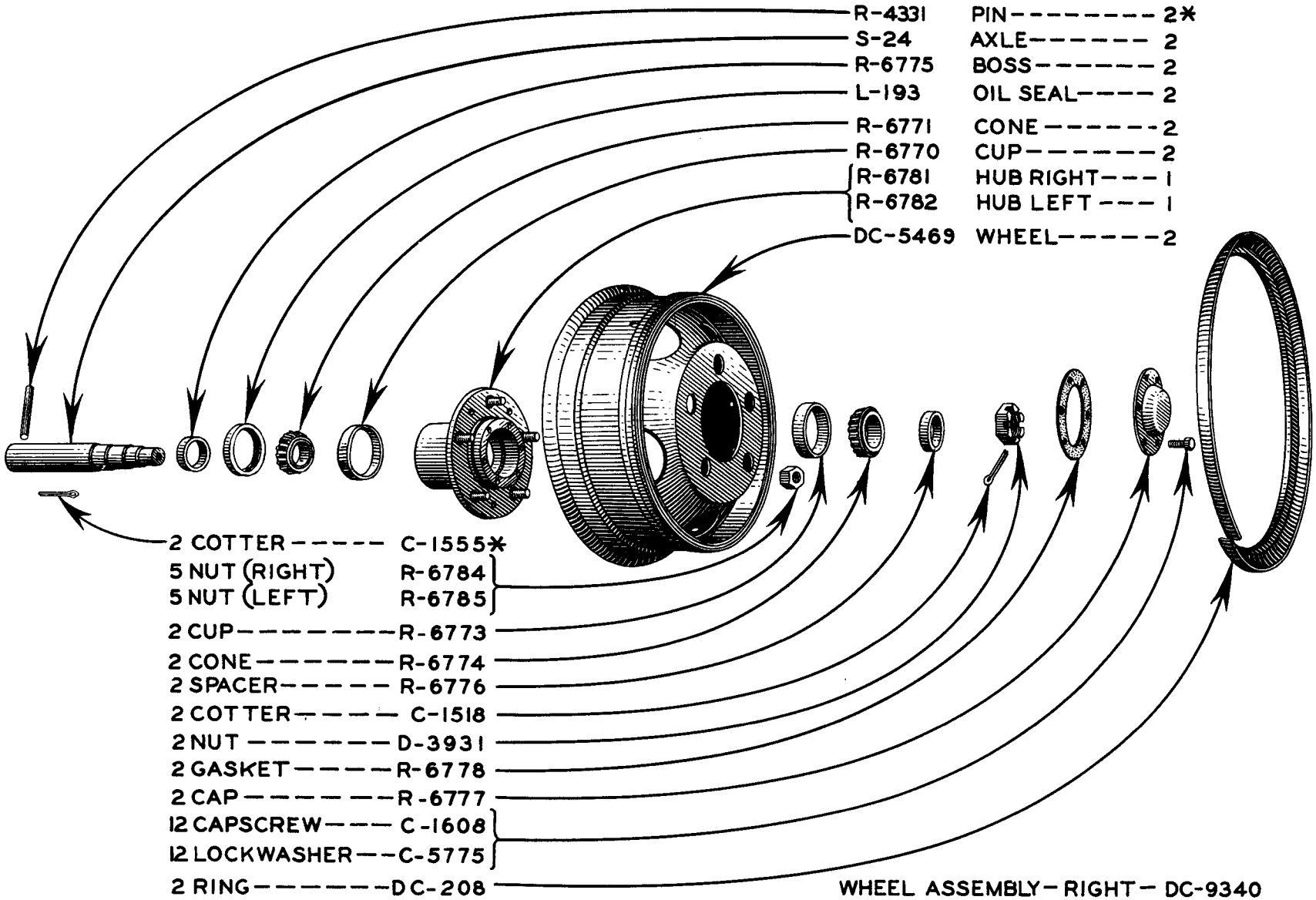

WHEEL ASSEMBLY-RIGHT- DC-9340
WHEEL ASSEMBLY-LEFT- DC-9341

*NOT FURNISHED AS PART OF DC-9340 OR 9341 WHEEL ASSEMBLIES. MUST BE ORDERED SEPARATELY.

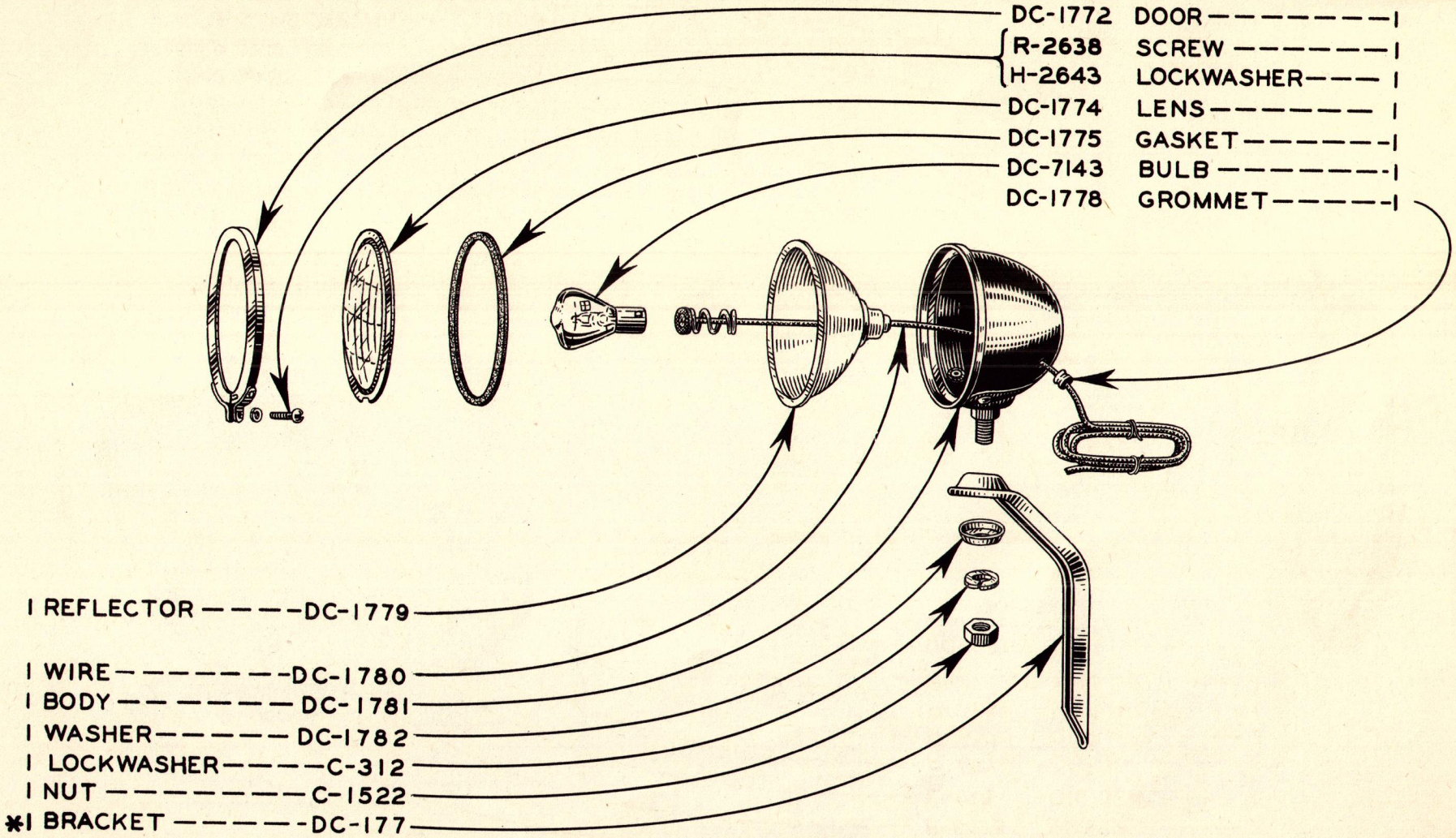

* NOT INCLUDED IN ASSEMBLY.

HEAD LAMP ASSEMBLY DC-7144

TOOL GROUP DC-5494

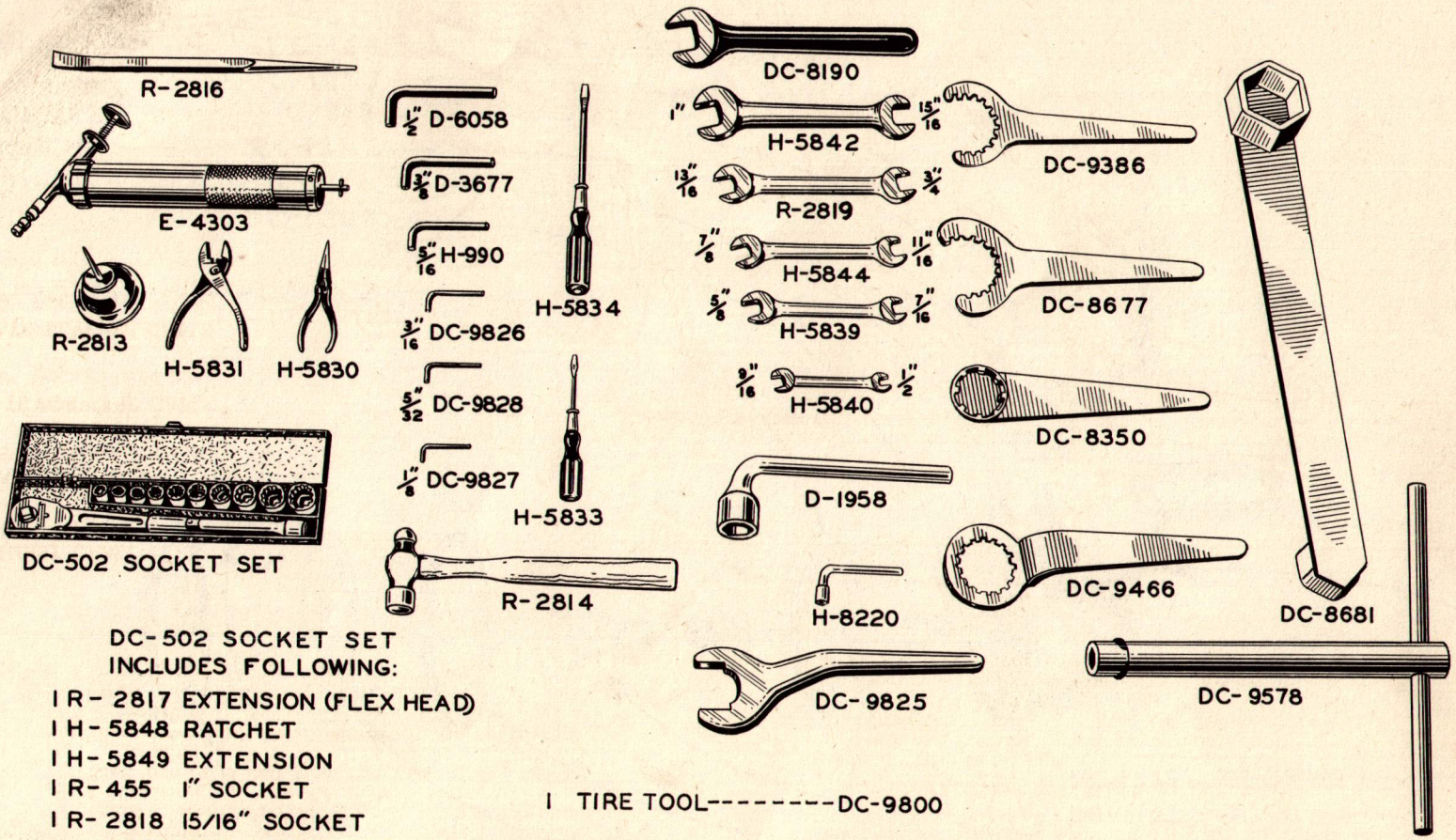

DC-502 SOCKET SET
INCLUDES FOLLOWING:

1 R-2817 EXTENSION (FLEX HEAD)
1 H-5848 RATCHET
1 H-5849 EXTENSION
1 R-455 1" SOCKET
1 R-2818 15/16" SOCKET
1 H-6009 7/8" SOCKET
1 H-6008 13/16" SOCKET
1 H-6007 3/4" SOCKET
1 H-6006 11/16" SOCKET
1 H-6004 5/8" SOCKET
1 H-6001 1/2" SOCKET
1 H-6002 9/16" SOCKET
1 H-6000 7/16" SOCKET
1 H-6010 SOCKET BOX

1 TIRE TOOL--------DC-9800

CABLE THREADING

The following cable threading instructions, together with the cable threading diagram give complete information needed for threading the cable through the Scraper.

BODY HOIST CABLE

From cable drum of hoist motor, bring cable down and around sheave in housing.....A
Then up and around front side of guide sheave in housing .....B
Then to right side and over top of sheave in housing C
Then across to left side and around sheave in housing .....D
Then down along back side of guide sheave in housing .....E
Down and around sheave in housing.....F
Then up and dead end in cable socket at.....G

APRON CABLE

From cable drum of apron motor, bring cable down and dead end in cable socket at.....H

TAILGATE RETURN CABLE

Dead end cable on right hand side of Tailgate motor cable drum. Wrap several turns around drum. Bring cable down and under drum, then forward and under sheave.....J
Then forward to top and around sheave in housing...K
Then back and fasten to cable tightener.....L

TAILGATE FORWARD CABLE

Dead end cable on left side of tailgate motor drum. Wrap several turns around drum. Bring cable up and over top of drum then forward, to top and around sheave.....M
Then back to top and around sheave in housing.....N
Then forward and dead end in cable socket.....O

HOIST CABLE
DC-8289 ½×6×19=36′ Long

APRON CABLE
E-5288 ½×6×19=10′ Long

TAILGATE FORWARD CABLE
DC-8290 ½×6×19=14′ Long
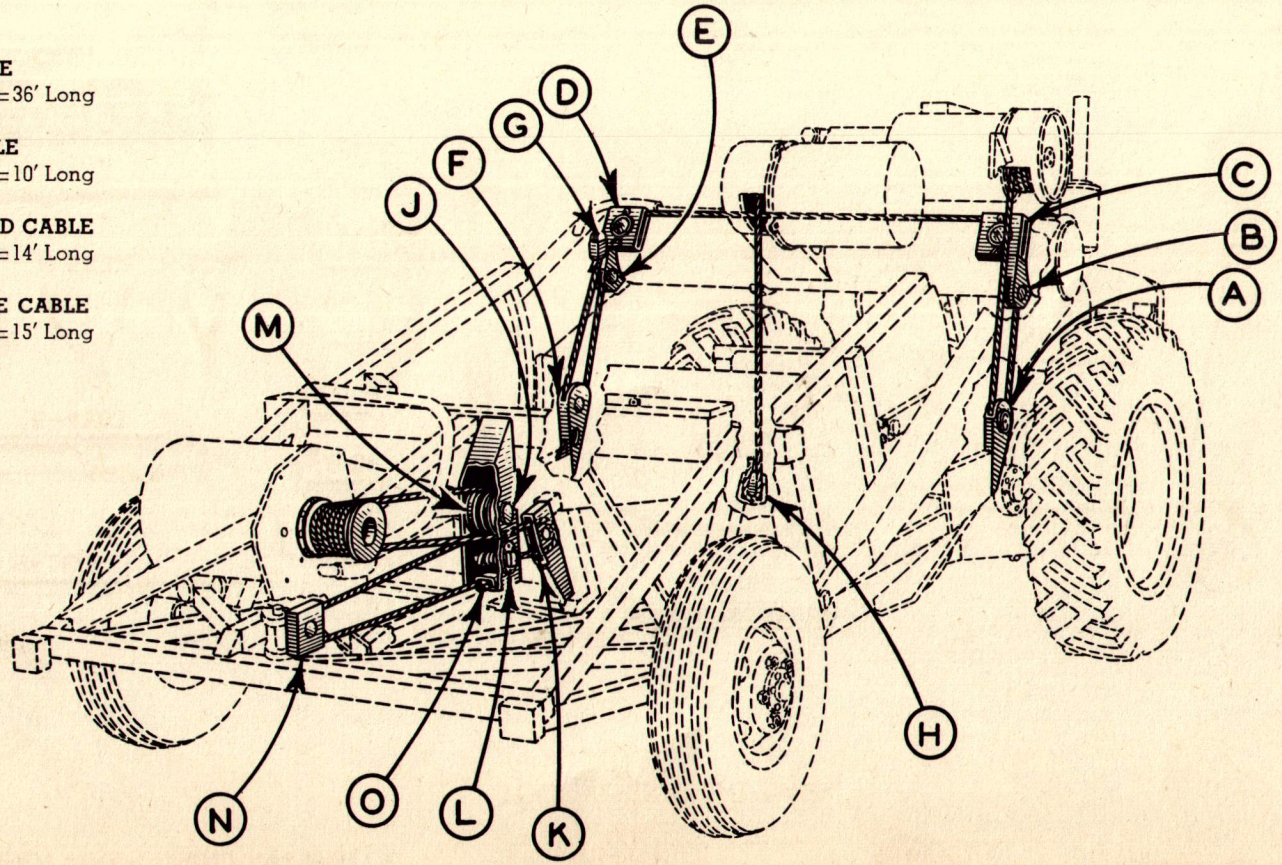
TAILGATE REVERSE CABLE
E-1220 ½×6×19=15′ Long