TC-68A

INTERNATIONAL®

PARTS CATALOG

T-6 (61 SERIES)

SERIAL NO. T-61-38951 Up

TD-6 (61 SERIES)

SERIAL NO. TD-61-38951 Up

TD-9 (91 SERIES)

SERIAL NO. TD-91-60301 Up

CRAWLER TRACTORS

® Registered Trade-Mark.

INTERNATIONAL HARVESTER COMPANY
180 North Michigan Avenue Chicago 1, Illinois, U.S.A.

TC-68A

T-6 (61 SERIES)

SERIAL NO. T-61-38951 Up

TD-6 (61 SERIES)

SERIAL NO. TD-61-38951 Up

TD-9 (91 SERIES)

SERIAL NO. TD-91-60301 Up

CRAWLER TRACTORS

MARCH, 1959

This catalog supersedes the TC-67 and TC-68 parts catalogs also the 1 013 161 R1 and 1 013 169 R1 Parts List, which should be destroyed.

The Importance of Adequate Parts and Service

The wise purchaser of a new machine gives consideration to the following factors:

1. *Original quality*
2. *Availability of service parts*
3. *Availability of adequate service facilities*

In many cases the machine becomes the only means of performing certain tasks that must be done in a limited period of time. Wear and even breakage of parts are to be expected due to operating conditions. However, the user can still be assured of getting his work done on time if service parts and adequate service facilities are available.

Foresighted International Construction Equipment distributors and dealers make every effort to provide good service and maintain a completely adequate stock of service parts.

When in need of parts, always give the International Construction Equipment distributor or dealer your serial numbers. We suggest that you write these serial numbers in the spaces provided below, for ready reference when parts are required.

Chassis Serial No. _____

(Stamped on plate on dash)

Engine Serial No. _____

(Stamped on left hand side of engine crankcase)

INTERNATIONAL CONSTRUCTION EQUIPMENT
· SERVICE NEWS ·

Construction Equipment Distributors (5)
Regional Service Representatives (1)
Regional Parts Representatives (1)
Regional Managers (1)
Parts Depots (2)
District Office Service Supervisors (1)
Canadian Sales
Overseas Affiliates and Distributors

FILE: With Parts Catalog TC-68A
NO: 64-29
MODEL: T-6 (61 SERIES), TD-6 (61 SERIES) and TD-9 (91 SERIES) Crawler Tractors
DATE: December 7, 1964

SUBJECT: Supplement to Model T-6 (61 SERIES), TD-6 (61 SERIES) and TD-9 (91 SERIES) Crawler Tractors Parts Catalog TC-68A.

This supplement lists the changes that must be made to Parts Catalog TC-68A to bring it up to date. Part numbers in this supplement replace parts now shown in Parts Catalog TC-68A. ADD, CHANGE or CANCEL parts as indicated.

gm

INTERNATIONAL HARVESTER COMPANY
401 NORTH MICHIGAN AVE. CHICAGO, ILLINOIS 60611, U.S.A.

Page No.	Ref. No.	IH Part Number	Comments
25	29	272 505 R92	ADD to description (order Crankcase Assembly, 272 503 R21 and set of four (4) Sleeves and Pistons, 277 078 R91).
27	4	264 323 R2	CHANGE to read 306 411 R91.
		ADD:	
27	8	341 033 R1	SLEEVE, cylinder (.002 inch oversize O.D.) (4 for Unit A)
27	10	264 338 R94	In "Composed of" CHANGE 264 323 R2 to read 306 411 R91.
		ADD	
27	12	58 598 DAX	BEARING, connecting rod (2 halves) (.015" undersize)
		ADD	
27	12	255 537 R11	BEARING, connecting rod (2 halves) (.045" undersize)
28			Under heading "Connecting Rods and Sleeve Sets (Continued)"
		ADD	
	21	341 034 R1	SLEEVE, cylinder (.002" oversize O.D.) (4 for Unit B)
			ADD after I.H. part No. 277 078 R91.
28	3	306 024 R91	PISTON and SLEEVE CONVERSION KIT (to convert a 264 Series diesel engine to a 281 Series diesel engine) (Composed of -
			1 GASKET 53 436 DE
			4 PISTON 277 071 R1
			4 PIN 264 041 R1
			or 254 955 R2
			8 RING 45 739 D
			4 SLEEVE 277 076 R1
			4 RING 277 072 R1
			8 RING 277 073 R1
			4 RING 277 074 R1
			4 RING 277 075 R1)
			Under heading "Crankshaft and Related Parts, Drive Pulley and Flywheel."
28	6	261 265 R41	ADD to description (order PACKAGE, 318 407 R91)
		ADD	
28	6	318 407 R91	PACKAGE, crankshaft field service (standard) (will work for 261 265 R41) (Composed of -
			§ 1 CRANKSHAFT (std)
			2 PIN 46 923 D
			1 BEARING 271 207 R92
			4 BEARING 259 960 R91
			4 BEARING 52 164 DAX)
		ADD	
28	14	259 962 R91	BEARING, front, rear and intermediate crankshaft (2 halves) (.015" undersize) (4)
		ADD	
28	14	259 964 R91	BEARING, front, rear and intermediate crankshaft (2 halves) (.045" undersize) (4)
28			ADD at bottom of page 28. § - Not Furnished Separately.

Page No.	Ref. No.	IH Part Number	Comments
29			Under Heading "Crankshaft and Related Parts, Drive Pulley and Flywheel - Continued."
		ADD	
29	15	271 210 R92	BEARING, center crankshaft (2 halves) (.015" undersize)
		ADD	
29	15	271 216 R92	BEARING, center crankshaft (2 halves) (.045" undersize)
		ADD	
29		263 018 R92	BEARING SET, crankshaft (.015" undersize) (Composed of - 4 BEARING 58 598 DAX 4 BEARING 259 962 R92 4 BEARING 271 210 R92 1 DIAGRAM IZG-430)
		ADD	
29		255 540 R95	BEARING SET, crankshaft (.045" undersize) (Composed of - 4 BEARING 255 537 R11 4 BEARING 259 964 R91 4 BEARING 271 216 R92 1 DIAGRAM IZG-430)
			Under heading "Exhaust System."
29	2	8 277 DX	ADD to description (TD-61M 501 to 2687)
		ADD	
29	2	304 022 R91	MANIFOLD w/two STUDS, 304 013 R1 (TD-61M 2688 up)
29	3	46 202 D	ADD to description (used with MANIFOLD, 8 277 DX)
		ADD	
29	3	304 013 R1	STUD, muffler (2) (used with MANIFOLD, 304 022 R91)
30	29	277 480 R1	ADD to description (TD-61M 501 to 2687)
			Under heading "Exhaust Muffler and Pipe Extension.
30	3	275 283 R92	CHANGE to read 303 972 R91. ADD to description (together with two STUD, 304 013 R1 will work for 275 283 R92)
		ADD	
30		304 013 R1	STUD, muffler (2) (used with 303 972 R91)
33		278 168 R91	CHANGE to read 278 024 R91 for Basic Service Engine.
33	1	62 866 D	CHANGE to read 340 092 R1
33	9	46 224 DBX	ADD to description (TD-91M 501 to 7796).
		ADD	
33	9	46 224 DBX	LEVER, valve intake and exhaust R.H. (2) (used with 297 583 R1) (TD-91M 7796 up)
33	14	46 221 DBX	ADD to description (TD-91M 501 to 7796)
		ADD	
33	14	46 223 DBX	LEVER, valve intake and exhaust L.H. (2) (used with 297 583 R1) (TD-91M 7796 up)
33	16	46 222 DBX	ADD to description (TD-91M 501 to 7796)

Page No.	Ref. No.	IH Part Number	Comments
33		ADD	
	16	46 224 DBX	LEVER, valve intake and exhaust R. H. (2) (used with 297 583 R1) (TD-91M 7796 up)
33	17	46 223 DBX	ADD to description (TD-91M 501 to 7796)
		ADD	
33	17	46 223 DBX	LEVER, valve intake and exhaust L. H. (2) (used with 297 583 R1) (TD-91M 7796 up)
34	54	278 292 R11	CHANGE to read 278 292 R21. In "Composed of" change 51 410 DA to read 50 410 DA. ADD (8) STUD 251 064 R1.
		ADD	
34	55	305 299 R1	GASKET, cylinder head (used with KIT, 305 301 R91) (1)
34		278 293 R91	In "Consists of" change 272 298 R1 to read 277 298 R1. ADD the following. 1 DIAGRAM IZG-3070 1 DIAGRAM IZG-3397 1 CLAMP 264 143 R1 1 PAD 264 142 R1 1 CLAMP 264 712 R1)
		ADD	
34		297 583 R1	DEFLECTOR, valve oil (4) (used with 46 223 DBX or 46 224 DBX) (TD-91M 7796 up)
		ADD	
34		251 064 R1	STUD, nozzle body retainer (8)
39	6	267 994 R2	ADD to description (Also used with KIT, 305 301 R92).
39	7	267 995 R1	ADD to description (Also used with KIT, 305 301 R92).
39	8	267 996 R1	ADD to description (Also used with KIT, 305 301 R92).
		ADD	
39	9	276 898 R1	RING, piston oil regulating (fourth groove) (used with KIT, 305 301 R92) (4)
39	9	267 997 R1	CHANGE description to read - RING, oil piston (fifth groove) (Perfect Circle 72A584) (4) ADD (also used with KIT, 305 301 R92)
39	10	31 194 H	ADD to description (also used with KIT, 305 301 R92)
39	11	254 957 R2	ADD to description (also used with KIT, 305 301 R92)
39	11	264 045 R1	ADD to description (also used with KIT, 305 301 R92)
		ADD	
39	12	319 915 R1	NUT, connecting rod (used with BOLT, 319 916 R11) (16)
39	12	1 832 YA	ADD to description (used with BOLT, 251 683 R1)
39	13	251 683 R3	ADD to description (used with NUT, 1 832 YA)
		ADD	
39	13	319 916 R11	BOLT, connecting rod w/NUT, 319 915 R1
39	14	275 606 R11	ADD to description (order PACKAGE, 318 410 R91)

Page. No.	Ref. No.	IH Part Number	Comments
30	14	ADD 318 410 R91	PACKAGE, crankshaft field service (will work for 275 606 R11) (Composed of - § 1 CRANKSHAFT (std) 1 GEAR 275 607 R1 2 PIN 46 923 D 1 PIN 17 136 R1 4 BEARING 259 965 R91 1 BEARING 269 605 R92 4 BEARING 251 684 R31)
39	18	267 265 R1	CHANGE to read 267 264 R3
39	18	ADD 305 245 R1	SLEEVE, cylinder ("SS" marking for service) (used with KIT, 305 301 R92) (4)
39	18	ADD 323 982 R2	SLEEVE, cylinder (.010" Oversize)
39	18	ADD 341 035 R1	SLEEVE, cylinder (.002" oversize)
39	19	267 259 R3	ADD to description (also used with KIT, 305 301 R92)
39	20	267 263 R91	CHANGE to read 267 263 R96. In "Composed of" change 267 265 R1 to read 267 264 R3, and ADD 1 RING 276 898 R1.
39	20	267 266 R91	CHANGE to read 267 266 R96. In description CHANGE 267 263 R91 to read 267 263 R96.
39	22	251 674 R11	CHANGE to read 251 674 R21. In "Composed of" CHANGE BOLT, 251 683 R3 to read 319 916 R11. CANCEL NUT, 1 832 YA and PIN, 103 373.
39	23	ADD 332 298 R11	BEARING, connecting rod (2 halves) (.010" undersize)
39	23	ADD 332 299 R11	BEARING, connecting rod (2 halves) (.020" undersize)
39	23	263 140 R11	CANCEL entire entry including Ref. No. and Part No.
39	24	ADD 332 288 R91	BEARING, front, rear and intermediate crankshaft (2 halves) (.010" undersize)
39	24	ADD 332 294 R91	BEARING, front, rear and intermediate crankshaft (2 halves) (.020" undersize)
39	24	263 195 R91	CANCEL entire entry including Ref. No. and Part No.
39	25	269 620 R92	CANCEL entire entry including Ref. No. and Part No.
39	25	ADD 332 297 R91	BEARING, center crankshaft (2 halves) (.020" undersize)
39	25	ADD 332 291 R91	BEARING, center crankshaft (2 halves) (.010" undersize)

Page No.	Ref. No.	IH Part Number	Comments
			ADD to end of list:
39		305 301 R92	KIT, conversion (to convert a 335 diesel engine to a 350 diesel engine) (Composed of - 1 GASKET 305 299 R1 4 PISTON 267 259 R3 4 PIN 264 045 R1 or 254 957 R2 8 RING, retainer 31 194 H 4 RING 267 994 R2 4 RING 267 995 R1 4 RING 267 996 R1 4 RING (upper) 276 898 R1 4 RING (lower) 267 997 R1 4 SLEEVE 305 245 R1)
		ADD	
39		332 018 R1	SHIM, cylinder sleeve (.004" thick) (used with SLEEVE, 267 264 R4)
41	2	275 698 R91	ADD to description (TD-91M 501 to 7385)
		ADD	
41	2	304 023 R91	MANIFOLD w/three STUDS, 304 014 R1 (TD-91M 7386 up)
41	3	25 122 D	ADD to description (used with MANIFOLD, 275 698 R91).
		ADD	
41	3	304 014 R1	STUD, muffler (3) (used with MANIFOLD, 304 023 R91)
		ADD	
41	5	52 550 DB	GASKET, intake manifold end cover (2) (used with GASKET PACKAGE, 261 340 R91)
42	33	271 481 R1	CHANGE to read 277 481 R1. ADD to description (TD-91M 501 to 7385)
			Under heading "Exhaust Muffler and Pipe Extension."
42	3	275 283 R92	CHANGE to read 303 973 R91. ADD to description (together with three STUDS, 304 013 R1 will work for 275 283 R92)
		ADD	
42		304 014 R1	STUD, muffler (3) (used with 303 973 R91).
52	17	259 939 R91	ADD to description (order 305 798 R11)
		ADD	
52	17	305 798 R11	CAP, fuel tank filler w/RING, 305 799 R1
52	18	259 937 R11	ADD to description (Used with CAP, 259 939 R91).
		ADD	
52	19	305 799 R1	RING, fuel tank filler cap sealing.
52	19	251 825 R2	ADD to description (used with CAP, 259 939 R91)
54	18	259 939 R91	ADD to description (order 305 798 R11)
		ADD	
54	18	305 798 R11	CAP, fuel tank filler w/RING, 305 799 R1.
54	19	259 937 R11	ADD to description (used with CAP, 259 939 R91).

Page No.	Ref. No.	IH Part Number	Comments
54	20	251 825 R2	ADD to description (used with CAP, 259 939 R91)
54	20	ADD 305 799 R1	RING, fuel tank filler cap sealing.
57		264 143 R1	ADD after part No. 278 900 R1 CLAMP, injection pipe
57		264 142 R1	PAD, injection pipe clamp
57		264 712 R1	CLAMP, injection pipe
60	1	275 802 R91	In "Composed of" change GASKET, 37 148 D to read 37 184 DA, quantity of (3). CANCEL SCREEN, 271 648 R91.
60	1	275 633 R91	In "Composed of" change GASKET, 37 148 D to read 37 184 DA, quantity of (3). CANCEL SCREEN, 271 648 R91.
60	5	271 648 R91	Change to read 37 148 DA. In description change Screen to read Gasket.
60	7	37 148 D	Change to read 37 148 DA.
61	12	277 044 R91	ADD (Unit A) to the description of 3/8NF x 1" hex-hd cap SCREW and ADD 3/8NF x 1-3/8" hex-hd cap SCREW (2 for Unit B)
82		351 218 R92	ADD to description (order 374 867 R91)
107		49 094 DD	ADD to description (order 374 866 R91)
142	22	273 168 R91	CANCEL entire entry including Ref. No. and Part No.
142	22	ADD 324 737 R1	PLATE, pressure (CL-3564-2) (together with CAMBLOCK SET, 273 169 R91 will work for 273 168 R91)
142	23	55 687 DG	CHANGE to read 55 687 DH. In description change vendor's part No. to read UCLA-33-3565. In "Composed of" change 273 167 R92 to read 273 167 R93, 273 168 R91 to read 324 737 R1 and 38 514 D to read 317 833 R1.
142	24	ADD 324 997 R91	MEMBER, with (8) cerametallic FACINGS and (4) RIVETS (UCL-49-3832-1)
142	31	273 167 R92	CHANGE to read 273 167 R93. CHANGE description to read CAMSHAFT, (set of two) w/two FITTING, 271 284 (CAMSHAFT, 273 167 R93 together with PLATE, 324 737 R1 and CAMBLOCK SET, 273 169 R91) (will work for 273 167 R92)(UCLB-4336-34)
142	38	38 514 D	CHANGE to read 317 833 R1. In description CANCEL vendor's part number.
142		ADD 324 998 R91	PACKAGE, cerametallic facing (UCL-11415-90-CR2) (consists of: (2) FACINGS and (1) RIVET 338 360 R1) (Four used with one driven member).
148	1	275 309 R11	CHANGE to read 275 309 R31. In description ADD (together with COVER, 331 496 R1 and GASKET, 331 497 R1, will work for 275 309 R21).

Page No.	Ref. No.	IH Part Number	Comments
148	2	ADD 331 496 R1	COVER, engine clutch inspection (used with COVER, 275 309 R31)
148	2	46 304 D	ADD to description (used with COVER, 275 309 R21)
148	16	275 066 R1	ADD after mounting hardware, 282 818 R1, GASKET, steering clutch lubricating port cover.
148		331 497 R1	ADD to end of list. GASKET, engine clutch inspection cover (used with COVER, 331 496 R1)
148		276 611 R1	ADD to description (used with COVER, 46 304 D)
150	1	275 200 R11	CHANGE to read 275 200 R31. ADD to description (together with COVER, 331 496 R1 and GASKET, 331 497 R1 will work for 275 200 R21)
150	2	ADD 331 496 R1	COVER, engine clutch inspection (used with COVER, 275 200 R31)
150	2	46 304 D	ADD to description (used with COVER, 275 200 R11)
150	10	8 514 DEX	CHANGE to read 8 514 DHX. In "Composed of" ADD 2 GASKET, 282 818 R1, CANCEL 2 PLUG, 144 016 and CHANGE STUD, 47 383 D to read 57 383 D.
150		144 016	CANCEL part number and description in its entirety.
150	18	275 066 R1	ADD to attaching hardware: Part No. 282 818 R2 GASKET (2)
150		276 611 R1	ADD to description (used with COVER, 46 304 D)
150		ADD 331 497 R1	GASKET, engine clutch inspection cover (used with COVER, 331 496 R1)
150		ADD 179 886	SCREW, hex-hd (used with COVER, 280 706 R22) (2)
156	51	ADD 306 036 R1	PINION and SHAFT, bevel (9T) (T-61, TD-61 41557 up)
156	51	271 763 R1	ADD to description (order 306 038 R91) (T-61, TD-61 38951 to 41556)
156	51	271 753 R91	ADD to description (order 306 038 R91) (T-61, TD-61 38951 to 41556)
156	51	ADD 306 038 R91	PINION and SHAFT, bevel 306 036 R1 (9 T) w/GEAR, 306 037 R1 (38 T) (matched pair) (see NOTE) (will work for 271 763 R1, 271 753 R91 and 271 754 R1) (T-61, TD-61 41557 up)
157	71	179 753 R91	CHANGE to read 310 506 R91
160	71	279 749 R91	CHANGE to read 310 508 R91
160	79	279 432 R1	ADD to description (used with 279 431 R1).

Page No.	Ref. No.	IH Part Number	Comments
		ADD	
160	79	311 277 R1	SPACER, high and low reverse idler gear (used with 279 431 R2)
160	80	279 431 R1	CHANGE to read 279 431 R2. ADD to description (together with CLIP, 311 279 R1, SPACER, 311 277 R1 and WASHER, 311 278 R1 will work for 279 431 R1)
160			ADD to end of list after part No. 172 574
		311 279 R1	CLIP, high and low reverse idler gear stop (used with 279 431 R2)
		311 278 R1	WASHER, high and low reverse idler gear spacer thrust (used with 279 431 R2)
161	18	265 043 R11	CHANGE to read 265 043 R12. In description ADD (together with rod end PIN, 103 498 and cotter PIN, 103 384, will work for 265 043 R11)
161	19	275 734 R1	ADD to description (used with 265 043 R11)
		ADD	
161	19	103 498	PIN, rod end (used with 265 043 R12)
			Under heading "Steering Brakes and Control (TD-91)"
162	13	275 182 R91	CHANGE to read 304 768 R91. In description ADD (with one SHAFT, Q 0 875).
162	13	275 183 R91	CHANGE to read 304 769 R91. In description ADD (with one SHAFT, Q 0 875).
166	1	271 855 R2	Cancel entire entry including Ref. No. and Part No.
		ADD	
166	1	341 925 R1	ADJUSTER, bevel gear bearing (together with 264 270 R1, RING, will work for 271 855 R4) (2) (TD-91)
166	2	279 495 R92	CHANGE to read 313 912 R91.
166	2	279 493 R92	CHANGE to read 313 913 R91.
166	6	254 970 R1	CHANGE to read 341 764 R1
166	7	271 857 R2	ADD to description (used with 271 855 R3)
		ADD	
166	7	264 270 R1	RING, bevel gear bearing adjuster sealing (used only with 341 925 R1) (TD-91) (2)
167			Under heading "Drive Bevel Gear - (Continued)"
167	10	271 754 R1	ADD to description. (order 306 038 R91) (T-61, TD-61 38591 to 41556)
		ADD	
167	10	306 037 R1	GEAR, drive bevel (38 T) (T-61 and TD-61 41557 up)
167		271 753 R91	ADD to description (order 306 038 R91) (T-61, TD-61 38951 to 41556)
		ADD	
167		306 038 R91	PINION and SHAFT, bevel 306 036 R1, (9 T) w/GEAR, 306 037 R1 (38 T) (matched pair) (see NOTE) (will work for 271 753 R91, 271 754 R1 and 271 763 R1) (T-61, TD-61 41557 up

Page. No.	Ref. No.	IH Part Number	Comments
168	22	43 729 DB	ADD to description (not used with ATTACHMENT, 320 399 R91)
168	23	43 728 D	ADD to description (24 required when used w/ATTACHMENT, 320 399 R91)
168	23	ADD 320 394 R91	DISC, steering clutch friction (bi-metallic) (used with ATTACHMENT, 320 399 R91) (26)
168	25	51 488 DD	CANCEL entire entry. Also ADD the following note: (Assembly no longer available. Furnish individual parts.)
168	26	ADD 258 276 R31	SHAFT, complete steering clutch (consists of SHAFT, 258 276 R3 and steering clutch pilot bearing retainer NUT, 258 278 R1)
168	30	45 134 D	CHANGE to read 310 512 R91.
168	32	254 959 R11	CHANGE to read 322 969 R11. In description CHANGE PLUG, 172 598 to read 322 970 R1.
168		320 399 R91	ADD to end of list: ATTACHMENT, bi-metallic steering clutch (Consists of - 26 DISCS, 320 394 R91 and 2 DISCS, 43 728 D (see NOTE 2)
168		172 598	ADD to end of list: PLUG, steering clutch shaft coupling (used with COUPLING, 254 959 R11) (2)
168		322 970 R1	ADD to end of list: PLUG, steering clutch shaft coupling (used with COUPLING, 322 969 R11) (2)
168			ADD to bottom of page 168. NOTE 2 - Field Application - Order through regular service parts channels.
169	14	254 967 R11	CHANGE to read 254 967 R21. In description CHANGE PLUG, 172 601 to read 324 745 R1.
170	20	46 826 D	ADD to description (22 required when used with ATTACHMENT 320 398 R91)
170	21	46 825 DB	ADD to description (not used with ATTACHMENT, 320 398 R91)
170	21	ADD 320 395 R91	DISC, steering clutch friction (used with ATTACHMENT, 320 398 R91) (24)
170	31	52 242 DC	CANCEL entire entry. Also ADD the following note: (Assembly no longer available. Furnish individual parts.)
170		172 601	ADD to description (used with COUPLING, 254 967 R11)
170		320 398 R91	ADD to end of list: ATTACHMENT, bi-metallic steering clutch (consists of - 24 DISCS, 320 395 R91 and 2 DISCS, 46 826 D (see NOTE 2)
170		324 745 R1	ADD to end of list: PLUG, steering clutch shaft coupling (used with COUPLING, 254 967 R21) (2)

Page No.	Ref. No.	IH Part Number	Comments
			ADD to end of list:
170		258 277 R31	SHAFT, complete steering clutch (Consists of - SHAFT, 258 277 R3 and steering clutch pilot bearing retainer NUT, 258 278 R1)
170			ADD to bottom of page 170. NOTE 2 - Field Application - Order through regular service parts channels.
173	1	263 970 R1	CHANGE to read 316 840 R1.
173	2	263 971 R1	CHANGE to read 316 841 R1.
173	2	263 972 R1	CHANGE to read 316 842 R1.
173	6	263 969 R1	CHANGE to read 316 839 R1.
173		263 977 R91	ADD to description (order 316 844 R91). In "Composed of" CHANGE 269 376 R1 to read 263 976 R1.
			ADD to end of list:
173		316 844 R92	TRACK ASSY (4 roller) (will work for 263 977 R91) (Composed of - 32 BUSHING 263 973 R3; 32 LINK, LH 316 839 R2; 32 LINK, RH 316 840 R2; 1 LOCKWIRE 263 945 R1; 1 BUSHING 263 974 R3; 1 LINK, LH 316 841 R2; 1 LINK, RH 316 842 R2; 1 PIN 263 976 R1; 32 PIN 263 975 R1)
174	1	46 933 D	CHANGE to read 307 032 R1.
174	3	47 334 D	ADD to description (Used with IDLER, 8 400 D).
		ADD	
174	4	321 292 R1	OIL SEAL, track idler (Used with IDLER, 320 639 R1).
174	4	273 571 R91	CHANGE to read 313 820 R91. In description change 275 597 R91 to read 313 822 R91, ADD (Used with IDLER, 8 400 D).
174	4	275 597 R91	CHANGE to read 313 822 R91. In description CHANGE 273 571 R91 to read 313 820 R91. ADD (Used with IDLER, 8 400 D).
174	5	8 400 D	CANCEL entire entry.
		ADD	
174	5	320 639 R1	IDLER, track (Not extended track frame) (together with OIL SEAL, 321 292 R91 will work for 8 400 D) (2)
174	6	41 431 D	CHANGE to read 307 033 R1
174	7	35 089 DA	CHANGE to read 114 608
		ADD	
174	9	306 548 R1	CAP, track idler (not extended track frame) (2) (used with SHAFT, 307 032 R1)
174	9	6 510 D	ADD to description (Used with SHAFT, 46 933 D)
174	10	37 290 D	ADD to description (Used with CAP, 6 510 D)

Page No.	Ref. No.	IH Part Number	Comments
174	10	17 829 DA	ADD to description (Used with CAP, 6 510 D)
174	10	ADD 271 647 R1	PLUG, track idler lubrication (Used with CAP, 306 548 R1)
175	20	ADD 306 134 R92	TRACK ROLLER and SHAFT ASSEMBLY (Used with PACKAGE 307 028 R91) (single flange) (Composed of - 1 PLUG 304 908 R1 2 RETAINER 304 905 R11 2 RING 262 637 R1 2 RING 304 906 R1 1 ROLLER 306 136 R91 1 SHAFT 304 904 R91 2 WASHER 53 349 D)
175	20	304 900 R91	ADD to description (order 272 642 R93)
175	21	ADD 306 137 R91	ROLLER w/BUSHING, track (double flange) (No. 2 and 3) (Used with Roller and Shaft Assembly, 306 135 R91)
175	21	272 631 R91	ADD to description (Order 306 142 R91)
175	21	ADD 306 135 R92	TRACK ROLLER and SHAFT ASSEMBLY (Used with PACKAGE 307 029 R91) (double flange) (Composed of - 1 PLUG 304 908 R1 2 RETAINER 304 905 R11 2 RING 272 637 R1 2 RING 304 906 R1 1 ROLLER 306 137 R91 1 SHAFT 304 904 R91 2 WASHER 53 349 D)
175	21	304 901 R91	ADD to description (Order 272 643 R93)
175	23	ADD 306 140 R1	BRACKET, track roller shaft (8) (*) (+)
175	23	272 640 R1	ADD to description (Not used with PACKAGE, 272 642 R93 or 272 643 R93)
175	25	272 639 R1	ADD to description (Not required for 306 134 R91 or 306 135 R91)
175	26	53 339 D	ADD to description (Not required for 306 134 R91 or 306 135 R91)
175	33	ADD 306 136 R91	ROLLER w/BUSHING, track (single flange) (No. 1 and 4) (Used with Roller and Shaft Assembly 306 134 R91)
175	33	272 627 R91	ADD to description (Order 306 141 R91)
175	35	ADD 306 140 R1	BRACKET, track roller shaft (8) (*) (+)
175	35	272 640 R1	ADD to description (Not used with PACKAGE, 272 642 R93 or 272 643 R93)
[illegible]	[illegible]	[illegible]	ADD [illegible] (Not used with PACKAGE, 272 642 R93 or

Page No.	Ref. No.	IH Part Number	Comments
176		272 642 R92	CHANGE to read 272 642 R93. In description ADD (with brackets) also (optional with service PACKAGE, 307 028 R91). In composed of CHANGE 272 640 R1 to read 306 140 R1, 304 900 R91 to read 306 134 R91, and CANCEL 53 339 D and 272 639 R1. (See NOTE)
176		272 643 R92	CHANGE to read 272 643 R93. In description ADD (with brackets) also (optional with service PACKAGE, 307 029 R91). In composed of CHANGE 272 640 R1 to read 306 140 R1, 304 901 R91 to read 306 135 R91 and CANCEL 53 339 D and 272 639 R1. (See NOTE)
176		ADD 307 028 R91	PACKAGE, track roller and shaft less brackets, service parts (single flange) (optional with PACKAGE, 272 642 R93) (#) (Composed of - 1 DIAGRAM IZG-3607 2 OIL SEAL 304 907 R91 1 ROLLER and SHAFT 306 134 R91)
176		ADD 307 029 R91	PACKAGE, track roller and shaft less brackets, service parts (double flange) (optional with PACKAGE, 272 643 R93) (#) (Composed of - 1 DIAGRAM IZG-3607 2 OIL SEAL 304 907 R91 1 ROLLER and SHAFT 306 135 R91)
176		ADD 306 141 R91	PACKAGE, track roller and shaft field service (single flange) (will work for 272 627 R91) (#) (Composed of - 1 TRACK ROLLER w/BUSHING 306 136 R91 1 DIAGRAM IZG-3607)
176		ADD 306 142 R91	PACKAGE, track roller and shaft field service (double flange) (will work for 272 631 R91) (#) (Composed of - 1 TRACK ROLLER W/BUSHING 306 137 R91 1 DIAGRAM IZG-3607)
176			ADD to bottom of page 176. # - Bracket, 306 140 R1 should be furnished if impractical to modify present brackets. NOTE: When PACKAGES, 272 642 R93 or 272 643 R93 are ordered, NOZZLE, 304 909 R91 and WRENCH, 304 910 R1 are required.
177	1	47 558 D	CHANGE to read 307 041 R1.
177	2	47 334 D	ADD to description (Used with IDLER, 8 403 D)
177	3	273 571 R91	CHANGE to read 313 820 R91. In description CHANGE 275 597 R91 to read 313 822 R91. ADD (Used with IDLER, 8 403 D).
177	3	275 597 R91	CHANGE to read 313 822 R91. In description CHANGE 273 571 R91 to read 313 820 R91. ADD (Used with IDLER, 8 403 D).

Page No.	Ref. No.	IH Part Number	Comments
		ADD	
177	3	321 292 R91	OIL SEAL, track idler (one used with IDLER, 320 641 R1)
177	4	8 403 D	CHANGE to read 320 641 R1. Description to read: IDLER, track (together with OIL SEAL, 321 292 R91 will work for 8 403 D) (4)
177	5	41 431 D	CHANGE to read 307 033 R1.
177	6	35 089 DA	CHANGE to read 114 608.
177	8	6 637 D	ADD to description (Used with FITTING, 37 290 D or 17 829 DA)
		ADD	
177	8	307 042 R1	CAP, track idler (Used with PLUG, 271 647 R1)
177	9	17 829 DA	ADD to description (Used with CAP, 6 637 D)
177	9	37 290 D	ADD to description (Used with CAP, 6 637 D)
		ADD	
177	9	271 647 R1	PLUG, track idler lubrication (Used with CAP, 307 042 R1) (4)
	13	272 323 R11	CHANGE to read 273 323 R11.
177	18	304 911 R91	ADD to description (Order 272 647 R93). CANCEL contents of "Composed of."
		ADD	
177	18	306 125 R92	ROLLER AND SHAFT ASSEMBLY, track (single flange) (4) (*) (Composed of - 1 BUSHING SET 314 937 R91 1 PLUG 304 908 R1 2 RETAINER 304 916 R11 2 RING 272 623 R1 2 RING 304 917 R11 1 ROLLER 306 129 R21 1 SHAFT 304 915 R91 2 WASHER 53 369 D X WASHER 322 247 R1)
177	18	272 612 R91	CHANGE in description 272 647 R92 to read 272 647 R93.
177	19	304 912 R91	ADD to description (Order 272 648 R93). CANCEL contents of "Composed of."
		ADD	
177	19	306 126 R92	ROLLER AND SHAFT ASSEMBLY, track (double flange) (+) (4) (Composed of - 1 BUSHING SET 314 937 R91 1 PLUG 304 908 R1 2 RETAINER 304 916 R11 2 RING 272 623 R1 2 RING 304 917 R1 1 ROLLER 306 130 R21 1 SHAFT 304 915 R91 2 WASHER 53 369 D X WASHER 322 247 R1)
177	19	272 613 R91	CHANGE in description 272 648 R92 to read 272 648 R93.

Page No.	Ref. No.	IH Part Number	Comments
177	19	ADD 306 130 R21	ROLLER, track (double flange) (Used with 306 126 R92)
177	19	272 618 R91	ADD to description (Order 306 133 R91).
177	20	ADD 306 131 R1	BRACKET, track roller shaft (8) (*) (+)
177	20	272 645 R1	ADD to description (Not used with PACKAGE, 272 647 R93 or 272 648 R93)
177	22	272 624 R1	ADD to description (Not used with 306 125 R92 or 306 126 R92)
177	23	53 359 D	ADD to description (Not used with 306 125 R92 or 306 126 R92)
177	28	ADD 322 247 R1	WASHER, track roller thrust .100 - .105 thick (Used with 306 125 R92 and 306 126 R92) (x)
177	29	ADD 314 937 R91	BUSHING SET (Used with 306 125 R92 and 306 126 R92)
177	30	272 614 R91	ADD to description (Order PACKAGE, 306 132 R91)
177	30	ADD 306 129 R21	ROLLER, track (single flange) (Used with 306 125 R92)
177			ADD the following notes to bottom of page 177. * - Used only on units equipped with PACKAGE, 272 647 R93. + - Used only on units equipped with PACKAGE, 272 648 R93. x - As Required.
178	32	ADD 306 131 R1	BRACKET, track roller shaft (*) (+) (8) 1/2 - 30 NUT (12) 1/2NF x 1-3/4" hex-hd cap SCREW (14) 1/2 x 1-3/8" hex-hd cap SCREW (3) 1/2" lock WASHER (20)
178		272 647 R92	CHANGE to read 272 647 R93. CHANGE description to read PACKAGE, track roller and shaft with brackets, field service (single flange) (will work for 272 612 R91 and 304 911 R91) (optional with parts PACKAGE, 307 024 R91) (see NOTE) (4)(TD-91 60301 to 66992) In "Composed of:" CHANGE 272 645 R1 to read 306 131 R1, 304 911 R91 to read 306 125 R91. CANCEL 53 359 D and 272 624 R1.
178		272 648 R92	CHANGE to read 272 648 R93. CHANGE description to read PACKAGE, track roller and shaft with brackets, field service (double flange) (will work for 272 613 R91 and 304 912 R91) (optional with parts PACKAGE, 307 025 R91) (see NOTE) (4) (TD-91 60301 to 66992) In composed of: CHANGE 272 645 R1 to read 306 131 R1 and 304 912 R91 to read 306 126 R91.
178		ADD 307 025 R91	PACKAGE, track roller and shaft field service (less brackets) (double flange) (#) (Consists of - Track Roller Shaft Bracket Modifying DIAGRAM, IZG-3606, two OIL SEAL, 304 918 R91 and ROLLER and SHAFT ASSY, 306 126 R91) (optional with parts PACKAGE, 272 648 R93)

Page No.	Ref. No.	IH Part Number	Comments
178		ADD 307 024 R91	PACKAGE, track roller and shaft field service (less brackets) (single flange) (#) (Consists of - Track Roller Shaft Bracket Modifying DIAGRAM, IZG-3606, two OIL SEAL, 304 918 R91 and ROLLER and SHAFT ASSEMBLY, 306 125 R91) (optional with parts PACKAGE, 272 647 R93)
178		ADD 306 132 R91	PACKAGE, track roller, less brackets, field service parts (single flange) (#) (Consists of - Track Roller Shaft Bracket Modifying DIAGRAM, IZG-3606 and TRACK ROLLER w/BUSHING, 306 127 R91) (will work for 272 614 R91)
178		ADD 306 133 R91	PACKAGE, track roller, less brackets, field service parts (double flange) (#) (Consists of - Track Roller Shaft Bracket Modifying DIAGRAM, IZG-3606 and TRACK ROLLER W/BUSHING, 306 128 R91) (will work for 272 618 R91)
178			ADD to bottom of page 178. * - Used only on units equipped with PACKAGE, 272 647 R93. + - Used only on units equipped with PACKAGE, 272 648 R93. # - Brackets, 306 131 R1, should be furnished if impractical to modify present brackets. NOTE: When PACKAGE, 272 647 R93 or 272 648 R93 are ordered, one each of NOZZLE, 304 909 R91 and WRENCH, 304 910 R1 are required.
179	16	47 334 D	ADD to description (used with IDLER, 8 400 D)
179	17	273 571 R91	CHANGE to read 313 820 R91. ADD to description (used with IDLER, 8 400 D)
179	17	ADD 321 292 R91	OIL SEAL, track idler (used with IDLER, 320 639 R1)
179	18	8 400 D	ADD to description (order IDLER, 320 639 R1 and OIL SEAL, 321 292 R91)
179	18	ADD 320 639 R1	IDLER, track (used with OIL SEAL, 321 292 R91) (2)
179	26	273 317 R91	CHANGE to read 307 062 R91.
179	26	273 318 R91	CHANGE to read 307 063 R91.
179	28	304 900 R91	In description ADD (order 272 642 R93).
179	28	ADD 306 134 R91	TRACK ROLLER and SHAFT ASSY (single flange) (*) (Composed of - 1 PLUG 304 908 R1 2 RETAINER 304 905 R11 2 RING 262 637 R1 2 RING 304 906 R1 1 ROLLER 306 136 R91 1 SHAFT 304 904 R91 2 WASHER 53 349 D)

Page No.	Ref. No.	IH Part Number	Comments
179	29	272 640 R1	In description ADD (not used with PACKAGE, 272 642 R93).
179	29	ADD 306 140 R1	BRACKET, track roller shaft (2) (*)
179			At bottom of page 179 ADD: * - For units equipped with PACKAGE, 272 642 R93.
180	31	272 639 R1	In description ADD (not required for 306 134 R91)
180	32	53 339 D	In description ADD (not required for 306 134 R91)
180	35	304 905 R11	ADD to description (used with "O" RING, 304 906 R1)
180	35	ADD 322 542 R1	RETAINER, track roller (4) (not used with "O" RING, 304 906 R1)
180	36	304 906 R1	ADD to description (used only with RETAINER, 304 905 R11)
180	37	ADD 322 246 R1	WASHER, track roller thrust (.100 - .105) Ⓠ
180	39	272 627 R91	In description ADD (order 306 141 R91)
180	41	ADD 306 140 R1	BRACKET, track roller shaft (2) (*)
180	41	272 640 R1	ADD to description (not used with PACKAGE, 272 642 R93)
180	41	272 641 R1	ADD to description (not used with PACKAGE, 272 642 R93)
180		272 642 R92	CHANGE to read 272 642 R93. In description ADD with BRACKETS and optional with service PACKAGE, 307 028 R91. In "Composed of" change 272 640 R1 to read 306 140 R1. CHANGE 304 900 R91 to read 306 134 R91 and CANCEL, 53 339 D and 272 639 R1.
180		ADD 307 028 R91	PACKAGE, track roller and shaft less brackets, field service parts (single flange) (optional with PACKAGE, 272 642 R93)(#) (Composed of - 1 ROLLER and SHAFT ASSY 306 134 R91 2 OIL SEAL 304 907 R91 1 DIAGRAM IZG-3607)
180		ADD 306 141 R91	PACKAGE, track roller less brackets field service parts (single flange) (will work for 272 627 R91) (#) (Composed of - 1 ROLLER w/BUSHING, 306 136 R91 and 1 DIAGRAM, IZG-3607)
180			ADD the following notes to bottom of page 180. * - For units equipped with PACKAGE, 272 642 R93. # - BRACKETS 306 140 R1 should be furnished if impractical to modify present brackets.

Page No.	Ref. No.	IH Part Number	Comments
182			Extended Track Frame and Rigid Extended Track Frame (TD-91) (5 Roller)
182	13	263 969 R1	CHANGE to read 316 839 R1.
182	16	263 971 R1	CHANGE to read 316 841 R1.
182	16	263 972 R1	CHANGE to read 316 842 R1.
182	17	263 970 R1	CHANGE to read 316 840 R1.
182	19	ADD 306 125 R91	TRACK ROLLER and SHAFT ASSY (single flange) (*) (Composed of - 1 PLUG 304 908 R1; 2 RETAINER 304 916 R11; ~~2~~ RING 272 623 R1; 2 RING 304 917 R11; 1 ROLLER 306 127 R91; 1 SHAFT 304 915 R91; 2 WASHER 53 369 D)
182	19	ADD 304 911 R91	ADD to description (order 272 647 R93)
182	20	ADD 306 131 R1	BRACKET, track roller shaft inner (used with ROLLER and SHAFT ASSY, 306 125 R91) (%) (2)
182	20	272 645 R1	ADD to description (not used with PACKAGE, 272 647 R93)
182	22	272 624 R1	ADD to description (not used with ROLLER and SHAFT ASSY, 306 125 R91)
182	23	53 359 D	ADD to description (not used with ROLLER and SHAFT ASSY, 306 125 R91)
182	28	ADD 322 247 R1	WASHER, track roller thrust (.100 - .105' thick) (x)
182	30	ADD 306 127 R91	ROLLER w/BUSHING, track (single flange) (used with ROLLER and SHAFT ASSY, 306 125 R91)
182	30	272 614 R91	In description ADD (order 306 132 R91).
182	33	ADD 306 131 R1	BRACKET, track roller shaft outer (%) (2)
182	33	272 645 R1	ADD to description (not used with PACKAGE, 272 647 R93).
182	33	272 646 R1	In description ADD (not used with PACKAGE, 272 647 R93).
182		274 133 R91	ADD to description (order 316 847 R91)
182			ADD at bottom of page 182. x - As Required % - For units equipped with PACKAGE, 272 647 R93.

Page No.	Ref. No.	IH Part Number	Comments
182		ADD 316 847 R91	TRACK ASSY (37 links) (2 for Unit C) (Composed of - 36 BUSHING 263 973 R2 1 BUSHING 263 974 R2 36 LINK 316 839 R1 36 LINK 316 840 R1 1 LINK 316 841 R1 1 LINK 316 842 R1 1 LOCKWIRE 263 945 R1 36 PIN 263 975 R1 1 PIN 263 976 R1)
182		263 982 R91	ADD to description (order 316 845 R91)
182		ADD 316 845 R91	TRACK ASSY (36 links) (2 for Unit A and B) (Composed of - 35 BUSHING 263 973 R2 1 BUSHING 263 974 R2 35 LINK 316 839 R1 35 LINK 316 840 R1 1 LINK 316 841 R1 1 LINK 316 842 R1 1 LOCKWIRE 263 945 R1 35 PIN 263 975 R1 1 PIN 263 976 R1)
183		272 647 R92	CHANGE to read 272 647 R93. ADD to description (optional with PACKAGE, 307 024 R91). In "Composed of" CHANGE 272 645 R1 to read 306 131 R1 and 304 911 R91 to read 306 125 R91. CANCEL 53 359 D and 272 624 R1.
183		ADD 307 024 R91	PACKAGE, track roller and shaft less brackets field service parts (single flange) (optional with PACKAGE, 272 647 R93)(#) (Composed of - track roller shaft bracket modifying DIAGRAM, IZG-3606, two OIL SEAL, 304 918 R91 and ROLLER and SHAFT ASSY, 306 125 R91)
183		ADD 306 132 R91	PACKAGE, track roller and shaft less brackets field service parts (single flange) (will work for 272 614 R91) (Composed of- track roller shaft bracket modifying DIAGRAM, IZG-3606 and ROLLER w/BUSHING, 306 127 R91)
183			ADD the following notes to the end of list. % - For units equipped with PACKAGE, 272 647 R93. # - Bracket 301 131 R1 should be furnished if impractical to modify present brackets. x - As Required.
183	3	53 360 D	Under heading "Front Idler (T-61, TD-61 and TD-91)." ADD to description (used with SEAL, 273 566 R91).
183	4	273 566 R91	CHANGE to read 338 542 R91. In description ADD (will work for 273 566 R91)
183	8	ADD 304 908 R1	PLUG, front idler lubrication (2) (used with SHAFTS, 307 037 R91 or 307 044 R91).

Page No.	Ref. No.	IH Part Number	Comments
183	8	37 290 D	ADD to description (used with SHAFTS, 263 424 R92 or 269 411 R91)
183	8	17 829 DA	ADD to description (used with SHAFTS, 263 424 R92 or 269 411 R91)
183	9	ADD 307 037 R91	SHAFT, front idler (2 for Unit A) (used with PLUG, 304 908 R1)
183	9	263 424 R92	ADD to description (used with FITTING, 37 290 D or 17 829 DA)
183	9	269 411 R91	ADD to description (used with FITTING, 37 290 D or 17 829 DA)
183	9	ADD 307 044 R91	SHAFT, front idler (2 for Unit B) (used with PLUG, 304 908 R1)
185	In Key to Units		
	A	267 872 R91	CHANGE to read 314 620 R91.
185	B	267 881 R91	CHANGE to read 314 621 R91.
185	E	ADD 314 622 R91	ATTACHMENT, track roller shield (for rigid extended track frame) (will work for 303 840 R92) @ TD-91
185	1	267 873 R11	CHANGE to read 314 608 R11.
185	1	267 874 R11	CHANGE to read 314 609 R11.
185	2	267 875 R11	CHANGE to read 314 610 R11.
185	2	267 876 R11	CHANGE to read 314 611 R11.
185	3	267 882 R11	CHANGE to read 314 612 R11.
185	3	267 883 R11	CHANGE to read 314 613 R11.
185	3	ADD 314 616 R11	SHIELD, LH track roller inner (Unit E)
185	3	ADD 314 617 R11	SHIELD, RH track roller inner (Unit E)
185	4	267 884 R11	CHANGE to read 314 614 R11.
185	4	267 885 R11	CHANGE to read 314 615 R11.
185	4	ADD 314 618 R11	SHIELD, LH track roller outer (Unit E)
185	4	ADD 314 619 R11	SHIELD, RH track roller outer (Unit E)
186		266 955 R1	CHANGE to read 311 344 R1.
187		266 955 R1	CHANGE to read 311 344 R1.
187		277 506 R91	ADD to description (not used on rigid track loaders. For rigid track loaders order 72 low profile 11-1/2" track SHOES, 320 572 R1, 288 BOLTS, 311 344 R1 and 288 NUTS, 273 870 R1.

Page No.	Ref. No.	IH Part Number	Comments
188			Under heading "Clipped Corner" where 267 019 R1 appears, ADD and CHANGE as follows.
188		ADD 316 843 R1	BOLT, track shoe (for attachments with 66 shoes) (264) (used with LINKS, 316 839 R1 and 316 840 R1)
188		ADD 316 843 R1	BOLT, track shoe (for attachments with 72 shoes) (288) (used with LINKS, 316 839 R1 and 316 840 R1)
188		ADD 316 843 R1	BOLT, track shoe (for attachments with 74 shoes) (296) (used with LINKS, 316 839 R1 and 316 840 R1)
188		267 019 R1	CHANGE to read 311 345 R1 (used with LINKS, 263 969 R1 and 263 970 R1)
189			Under headings "Square Corner, Rubber Shoe, Flat Shoe and Staggered Lug" where 267 019 R1 appears, ADD and CHANGE as follows:
189		ADD 316 843 R1	BOLT, track shoe (for attachments with 74 shoes) (296) (used with LINKS, 316 839 R1 and 316 840 R1)
189		ADD 316 843 R1	BOLT, track shoe (for attachments with 66 shoes) (264) (used with LINKS, 316 839 R1 and 316 840 R1)
189		267 019 R1	CHANGE to read 311 345 R1 (used with LINKS, 263 969 R1 and 263 970 R1)
191	7	271 772 R1	ADD to description serial number (TD-61 39974 to 41342)
191	7	ADD 279 777 R1	CAGE, sprocket drive pinion inner bearing (40" gauge) (TD-61 41343 up)
191	20	ADD 279 778 R1	PIN, sprocket drive gear housing dowel (40" gauge) (TD-61 41343 up)
191	20	53 804 D	ADD to description serial number (TD-61 39974 to 41342)
191	22	45 124 DA	CHANGE to read 313 188 R1
191	23	53 535 D	CHANGE to read 313 203 R91
191	30	53 808 D	ADD to description (order 310 516 R91)
191	31	8 496 D	In description CHANGE 302 912 R91 to read 310 516 R91.
191	32	302 912 R91	CHANGE part number to read 310 516 R91.
191	37	8 504 D	ADD to description serial number (TD-61 39974 to 41342)
191	37	ADD 279 775 R1	CAGE, I H steering clutch support bearing (50" gauge) TD-61 41343 up)
191	37	8 521 D	ADD to description Serial Number (TD-61 39974 to 41342)
191	37	ADD 279 776 R1	CAGE, RH steering clutch support bearing (50" gauge) (TD-61 41343 up

Page No.	Ref. No.	IH Part Number	Comments
191	42	22 977 DA	ADD to description serial number (TD-61 39974 to 41342)
192	56	53 532 D	CHANGE to read 313 204 R91
192	57	45 125 DA	CHANGE to read 313 189 R1
194	2	ADD 279 825 R1	RETAINER, sprocket drive pinion inner bearing (TD-91 67126 up, except 67131)
194	2	8 510 DA	ADD to description (TD-91 60301 to 67125, also 67131)
194	8	54 006 D	ADD to description (TD-91 60301 to 67125)
194	8	ADD 54 007 D	PIN, sprocket drive gear outer housing to main frame dowel (TD-91 67126 up except 67131)
194	15	ST 315	CHANGE to read 278 063 R91.
194	23	46 751 DA	CHANGE to read 313 190 R1.
194	24	53 537 DA	CHANGE to read 313 205 R91.
194	31	54 008 D	ADD to description (order 310 514 R91)
194	33	279 491 R92	CHANGE to read 310 514 R91. ADD to description "will also work for 54 008 D")
194	38	22 977 DA	ADD to description (TD-91 60301 to 67125)
194	42	ADD 275 600 R1	CAGE, LH steering clutch support bearing (TD-91 67126 up except 67131)
194	42	8 507 D	ADD to description (TD-91 60301 to 67125, also 67131)
194	42	8 516 D	ADD to description (TD-91 60301 to 67125, also 67131)
194	42	ADD 275 601 R1	CAGE, RH steering clutch support bearing (TD-91 67126 up except 67131)
195	54	ST-223	CHANGE to read ST-684.
195	57	53 538 DA	CHANGE to read 313 206 R91.
195	58	46 799 DA	CHANGE to read 313 191 R1.
197		364 655 R1	CHANGE to read 368 710 R1.
218			Under heading "Radiator Shutter Controls" (Key to Units) Change as follows:
218	B	275 290 R91	CHANGE to read 307 167 R91.
218	10	53 939 D	CHANGE to read 309 452 R1.
227 and 228			CHANGE vendor's name in note to read: Service Tools, 1923 S. Indiana Avenue, Chicago 16, Illinois.
238		277 506 R91	ADD to description (not used on rigid track loaders. For rigid track loaders order 72 low profile SHOES, 320 572 R1, 288 BOLTS, 311 344 R1 and 288 NUTS, 273 870 R1)
239		277 506 R91	ADD to description (not used on rigid track loaders. For rigid track loaders order 72 low profile SHOES, 320 572 R1, 288 BOLTS, 311 344 R1 and 288 NUTS, 273 870 R1.

INTRODUCTION

This catalog contains a complete list of parts for the T-6 (61 Series) TD-6 (61 Series) and TD-9 (91 Series) crawler tractors.

T-6 (61 Series) has a four cylinder 4 x 5-1/2 carbureted engine.
T-6 (61 Series) has a four cylinder 4-1/8 x 5-1/2 carbureted engine.
TD-6 (61 Series) has a four cylinder 4 x 5-1/2 diesel engine.
TD-6 (61 Series) has a four cylinder 4-1/8 x 5-1/2 diesel engine.
TD-9 (91 Series) has a four cylinder 4-1/2 x 5-1/2 diesel engine.

Following is a brief summary of the system used in compiling this catalog. It is to your advantage to carefully study this summary.

This catalog is designed into a new double-column page format, and is divided into four separate sections --- Introductory pages, Indexes to Units; Illustrations and Parts Lists, and Numerical Index.

(1) INDEXES. Two types of indexes are employed herein. The Index to Units for a specific classification will list alphabetically all of the units comprising the classification and will direct the user of the catalog to the page where the illustration and parts list may be found. A Numerical Index at the back of the catalog contains a listing of part numbers (excluding standard fasteners) with the page number showing where each part is listed and described.

NOTE - It is important that you refer frequently to the Index to Units. Failure to do so will result in not being able to locate the proper unit.

(2) ILLUSTRATIONS. The method of illustrating parts in this catalog is known as the "Exploded View" method. The individual parts in each illustration are shown in their normal relationship to one another. Reference numbers only are shown in each illustration. These numbers correspond with numbers in the reference number column in the accompanying list of parts preceding or following the illustration. Unnumbered parts are the same as corresponding parts with reference numbers shown elsewhere in the illustration.

CAUTION: Reference numbers should not be used when ordering parts. Always use IH part numbers or description when ordering.

(3) METHOD OF LISTING. The parts list of each classification is divided into units. Parts are listed in order according to reference number shown in the illustration, followed by a full description based upon the "noun first" method -- i.e., the noun name of the part is listed first then the modifying descriptive information which serves to specifically identify the item. For example: SHAFT w/TWO PLUGS ASSEMBLY, valve lever. Parts not shown in illustrations appear at end of list in alphabetical sequence by noun name. Parts listed will work on all units covered in this catalog unless a serial number or other qualifying designation is given for purpose of identification.

Throughout this catalog the term "Front" indicates the radiator end and "Rear" indicates the drawbar end of the unit. Whenever the terms "Right" or "Left" are used it should be understood to mean from a rear position looking toward the radiator end. Manufacturers part numbers are listed in brackets following the description of the PART.

(4) NUMBER REQUIRED. In this new double-column catalog format the single "No. Req'd." column is eliminated and the quantity used of each item is shown in parenthesis (4) following the description of the item. Where no quantity is indicated it should be understood to mean that only one (1) is required.

In many units it was possible to remove the multiple "Number Required" column. The number required information is shown in parenthesis (2 for Unit A, 3 for Unit B) following the description of the item. When a unit letter (Unit A) is shown without a quantity it should be understood to mean only one (1) is required per unit. Letters of these units correspond with those shown at the beginning of a group comprising several minor parts lists.

(5) ASSEMBLIES AND ATTACHMENTS. Wherever possible the component parts of assemblies or attachments are shown in the "exploded views" by the use of boxes, brackets or arrows. Component parts of assemblies or attachments are listed by one of the following methods.

(a) The listings are fully covered by descriptions for simple assemblies and attachments.
(b) When four or more parts are contained in the assemblies or attachments the listing of components immediately follows the description with the wording "(Composed of -)"

(c) Assemblies or attachments consisting of many parts shows the assembly or attachment number at the beginning of the unit list, followed by the listing of the components.

Exceptions to the above methods are explained by footnotes in the text.

(continued)

Individual parts of an assembly which are not available for service are marked with a symbol §. In some instances, such parts are listed with a notation giving the information which is to be used for ordering.

(6) PART NUMBERS. The policy governing part numbers is outlined in the pamphlet "What is a Parts Number?" which has been distributed throughout the company operations.

(7) MISCELLANEOUS PARTS. In a great many instances, parts which appear in an "Exploded View"--- such as standard bolts, screws, nuts, etc. --- are not identified by a reference number. These parts are known as COMMON HARDWARE items and appear in abbreviated nomenclature and are shown indented under the major items with which they are used. They should be ordered as listed, since they are not component parts of the pieces they attach. Hardware parts identified with part numbers have been designed for a specific usage. Standard hardware parts should not be substituted for them.

WARNING: Attaching parts especially made for their location should never be substituted with regular standard parts.

The following rules are established to govern the listing of attaching parts:

The part number for Common Hardware items is eliminated. However, Design Hardware items will continue to be listed by part number and description.

All Carriage, Machine and Plow BOLTS; NUTS, and Cap, Machine and Set SCREWS will be considered furnished with National Coarse Thread unless otherwise specified. The number of threads per inch will be eliminated.

All NUTS will be considered "hex." unless otherwise specified.

All WASHERS will be considered "Plain" unless otherwise specified. The "ID", "OD" and "No." identity will be eliminated. The inside dimension will be listed first, followed by the outside diameter and the thickness.

All lock WASHERS will be considered "Medium" type unless specified as "Light" or "Heavy".

All cotter PINS will be considered "Extended-Prong" type unless otherwise specified.

All groov PINS will be considered "Standard-Groove" unless otherwise specified.

All common RIVETS will be considered "Annealed" unless otherwise specified.

All countersunk-head tubular RIVETS will be considered "Copper-Plated Steel" unless otherwise specified.

All oval-head tubular RIVETS will be considered "Brass".

Standard bolts used in International Harvester Products are manufactured under standards known as Unified National Coarse Thread (U. N. C.) and Unified National Fine Thread (U. N. F.) with the number of threads per inch for various diameters as shown below:

Diameter of Bolt	No. of Threads per inch (U. N. C.)	No. of Threads per inch (U. N. F.)
1/4"	20	28
5/16"	18	24
3/8"	16	24
7/16"	14	20
1/2"	13	20
9/16"	12	18
5/8"	11	18
3/4"	10	16
7/8"	9	14
1"	8	14
1-1/8"	7	12
1-1/4"	7	12
1-3/8"	6	12
1-1/2"	6	12

(8) ABBREVIATIONS. The abbreviations used in this catalog are explained in the list of abbreviations on page 10.

(9) PRICES. Parts prices will be found in the CH-219 tractor and engine price list, which is issued separately and includes both current and obsolete parts.

(10) WEIGHTS. Weights of parts are listed with the "Numerical Index Pages" in column heading "Approx. Weight, Lbs." Weights for part numbers listed without weights will be shown when available in the next reprint of this catalog.

PRINTED IN UNITED STATES OF AMERICA

(11) SERIAL NUMBER AND PREFIX LETTERS

Crawler Tractor	Engine Serial Prefix and Starting Serial Number	Engine Size	Basic Engine Serial Prefix and Starting Serial Number
T-6 (61 Series)	C-264 170850	4 x 5-1/2"	None
T-6 (61 Series)	C-281 1123	4-1/8 x 5-1/2"	None
TD-6 (61 Series)	TD-61M 501 to 1403	4 x 5-1/2"	None
TD-6 (61 Series)	TD-61M 1404	4-1/8 x 5-1/2"	BSD-281 501
TD-9 (91 Series)	TD-91M 501	4-1/2 x 5-1/2"	BSD-350 501

Chassis or Crawler Tractor Serial Prefix and Starting Chassis Number
T-61 38951 to 39765
T-61 39766
TD-61 38951 to 39973
TD-61 39974
TD-91 60301

Serial numbers for carbureted engines are stamped on a pad on the right side of the engine crankcase.
Serial numbers for diesel engines and basic engines are stamped on the top milled section on the left side of the engine crankcase.
Serial number for Chassis (or Crawler Tractors) are stamped on the name plate located on the dash.

The chassis serial numbers for these tractors run consecutively regardless of the tractor model, however, no attempt is made to have the engine and chassis serial numbers correspond.

Customers should be urged to supply the engine and chassis serial numbers, including model prefix and suffix letters when ordering parts.

INSTRUCTIONS FOR ORDERING PARTS

(a) All parts orders should be sent to the control district office or parts depot when so instructed. Give complete address, state the county and railroad station (when shipping point is different than post office), also whether shipment is to go by parcel post, express, truck, or freight.

(b) When ordering parts, give the IH part number, including suffix or prefix letters. To facilitate identification of these parts, "Serial Numbers" assigned to machines, if any, should be furnished.

(c) Parts should be ordered on the standard parts order blank. The parts should be arranged in sequence by part numbers to facilitate service on orders at the control district office or parts depot.

(d) Claims for shortage or error in the handling of an order for parts must be made upon receipt of goods.

All illustrations and descriptive matter in this publication apply to International Harvester products sold under the McCormick, McCormick-International, McCormick-Deering, or McCormick-Deering International trade name.

It is the policy of International Harvester Company to improve its products whenever it is possible and practical to do so.

We reserve the right to make changes or add improvements in the design or construction of parts at any time without incurring the obligation to install such changes on products previously delivered.

PRINTED IN UNITED STATES OF AMERICA

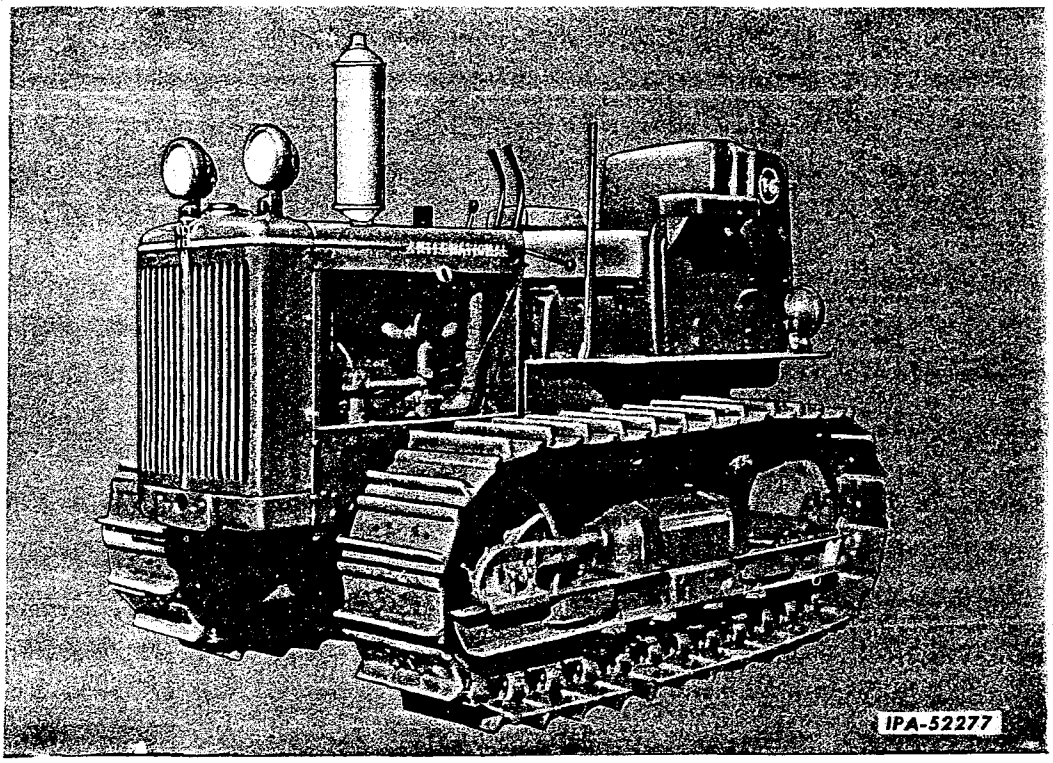

Left front view of T-6 (61 Series) Crawler Tractor.

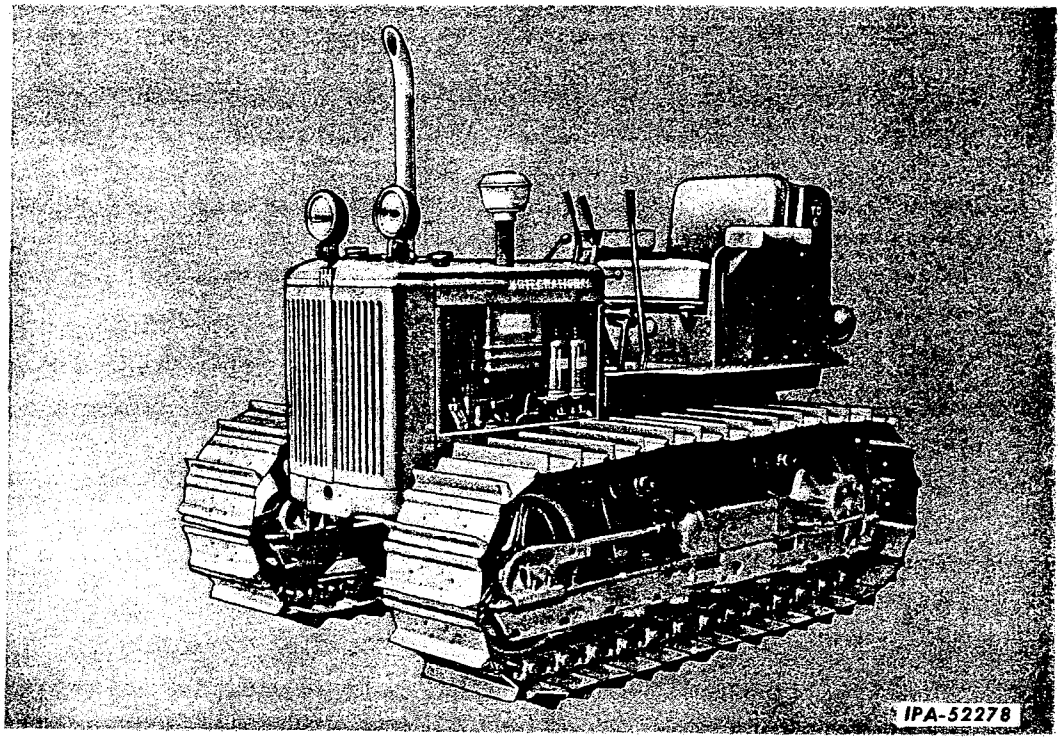

Left front view of TD-6 (61 Series) equipped with Extended Track Frame (5 Roller).

PRINTED IN UNITED STATES OF AMERICA

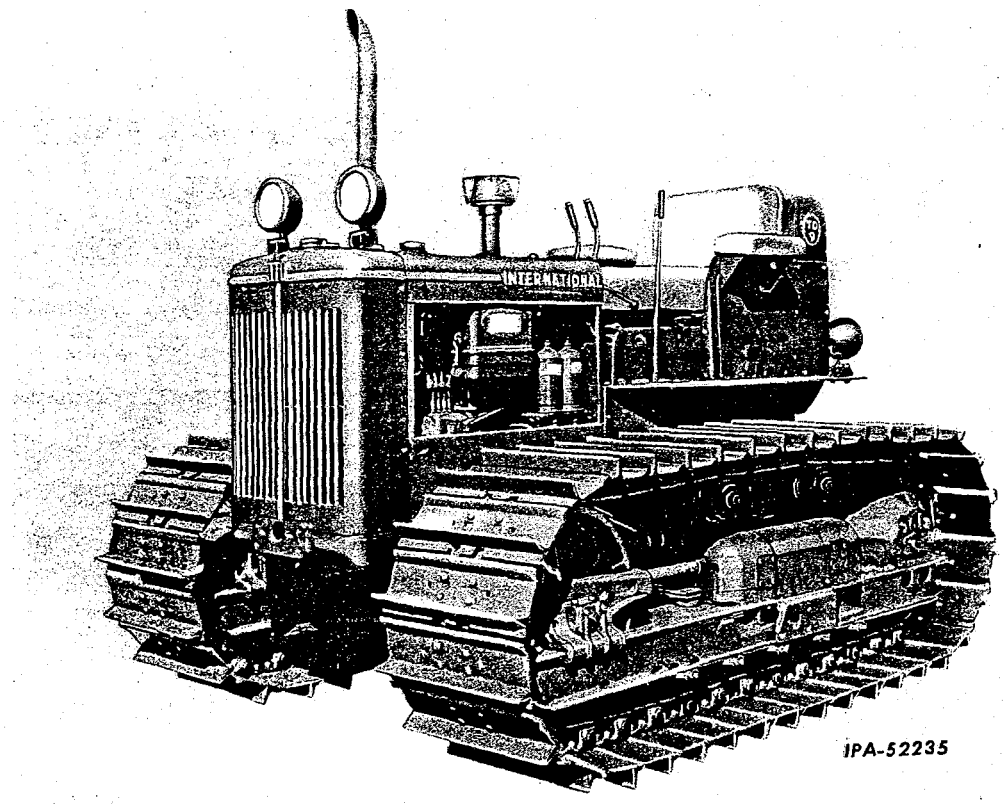

Left front view of TD-9 (91 Series) equipped with Extended Track Frame (5 Roller).

INDEX TO UNITS

DESCRIPTION	Page
CLUTCH	
Clutch	
Engine—over-center (12") (T-61 and TD-61)	141
Engine—over-center (13") (TD-91)	143
COOLING SYSTEM	
Belt, fan (T-61)	62
(TD-61)	64
(TD-91)	65
Connections, fan housing	67
Fan	
Blower (T-61)	62
(TD-61)	64
(TD-91)	66
Suction (T-61)	62
(TD-61)	64
(TD-91)	66
Grille, radiator	67
Housing, fan	67
Pump, water (T-61)	62
(TD-61)	64
(TD-91)	66
Radiator	68
Thermostat, 165°—190° (not low boiling point)	
(T-61)	62
(TD-61)	64
(TD-91)	65
Thermostat, 130°—155° (low boiling point)	
(T-61)	62
(TD-61)	64
(TD-91)	65
ELECTRICAL SYSTEM	
Brackets and swivels, headlight and rear light (T-61)	91
(TD-61 and TD-91)	121
Cables, spark plug (T-61)	78
(TD-61 and TD-91)	103
Distributor, battery ignition (T-61)	80
(TD-61 and TD-91)	105
Distributor, drive and bracket (T-61)	79
Distributor, or magneto drive and bracket (TD-61 and TD-91)	104
Generator and connections (standard) (T-61)	85
(standard) (TD-61)	110
(high output) (TD-61)	112
(standard) (TD-91)	111
(high output) (TD-91)	111
Generator (standard) (6 volt) (T-61)	86
(standard) (12 volt) (TD-61 and TD-91)	112
(high output) (12 volt) (TD-61)	113
(high output) (12 volt) (TD-91)	114
Guard	
Headlight Brush (T-61)	101
(TD-61 and TD-91)	123
Rear light Brush (T-61)	101
(TD-61 and TD-91)	123
Tail-Light (T-61)	101
(TD-61 and TD-91)	122
Ignition, unit battery (T-61)	79
(TD-61 and TD-91)	104
Lights	
Auxiliary rear (T-61)	101
(TD-61 and TD-91)	121
Dash (T-61)	102
(TD-61 and TD-91)	122
Headlight and rear (Guide Lamp) (T-61)	90
(TD-61 and TD-91)	120
Headlight and rear (Hobbs) (T-61)	90
(TD-61 and TD-91)	120
Tail (T-61)	100
(TD-61 and TD-91)	122
Lighter, cigarette (T-61)	102
(TD-61 and TD-91)	124
Lighting and Starting	
Battery Ignition (T-61)	93, 94
(TD-61)	126, 136
(TD-91)	128, 136
Magneto Ignition (T-61)	96, 98
(TD-61)	130, 139
(TD-91)	133, 139
Magneto International Type H-4 (T-61)	82
(TD-61 and TD-91)	106
Motor Cranking (Delco-Remy) (T-61)	88
(TD-61 and TD-91)	116
Pan, fuel filter drip (TD-61 and TD-91)	118
Spark Plug (T-61)	78
(TD-61 and TD-91)	103
Regulator, Voltage (Delco-Remy (6 volt) (T-61)	87
(12 volt) (TD-61 and TD-91)	115
Support, battery (T-61)	91
(TD-61 and TD-91)	123
Switch	
Battery Ignition Push-Pull (T-61)	83
(TD-61 and TD-91)	108
Battery Ignition Lock (T-61)	84
(TD-61 and TD-91)	109
Lighting (T-61)	91
(TD-61 and TD-91)	119
Magneto Ignition (T-61)	84
Starting (T-61)	88
(TD-61 and TD-91)	119

PRINTED IN UNITED STATES OF AMERICA

INDEX TO UNITS—Continued

DESCRIPTION	Page
ENGINE (Carbureted) (T-61)	
Camshaft and related parts	15
Cover	
Crankcase front	14
Valve	11
Crankcase	14
Crankshaft and related parts	17
Exhaust System	
Arrester, spark	20
Extension, exhaust	20
Manifold	20
Muffler	20
Pipe, exhaust	19
Flywheel	17
Head, cylinder	12
Levers, valve	11
Pistons	16
Pulley, drive	18
Rods, connecting	17
Sleeves, cylinder	16
Supports, front and rear	14
Valves	12
ENGINE (Diesel) (TD-61 and TD-91)	
Camshaft and related parts (TD-61)	26
(TD-91)	37
Cover	
Crankcase front (TD-61)	26
(TD-91)	36
Valve (TD-61)	22
(TD-91)	33
Crankcase (TD-61)	25
(TD-91)	36
Crankshaft and related parts (TD-61)	28
(TD-91)	39
Exhaust System	
Manifold (TD-61)	29
(TD-91)	41
Muffler (TD-61)	30
(TD-91)	42
Pipe, extension (TD-61)	30
(TD-91)	42
Engine, service (TD-61)	22
(TD-91)	33
Flywheel (TD-61)	28
(TD-91)	39
Head, cylinder (TD-61)	23
(TD-91)	34
Mechanism, starting valve (TD-61)	22
(TD-91)	33
Mechanism, starting (TD-61)	31
(TD-91)	40
Pistons (TD-61)	27
(TD-91)	39
Pulley, drive (TD-61)	28
(TD-91)	39
Rods, connecting (TD-61)	27
(TD-91)	39
Sleeve, cylinder (TD-61)	27
(TD-91)	39
Supports, front and rear engine (TD-61)	25
(TD-91)	36
Valves (TD-61)	22
(TD-91)	33
ENGINE CONTROL, DASH, INSTRUMENTS AND INSTRUMENT PANEL	
Control Engine (T-61)	211
(TD-61)	213
(TD-91)	214
Dash (T-61)	211
(TD-61)	212
(TD-91)	214
Instruments (T-61)	211
(TD-61)	213
(TD-91)	214
Instrument Panel (T-61)	211
(TD-61)	213
(TD-91)	214
EQUIPMENT COMBINATIONS	
Loader, rigid track (T-6-425-1)	238
(TD-6-424-1)	239
(TD-9-424-0 and TD-9-424-2)	240
FINAL DRIVE	
Drive Sprocket (T-61 and TD-61)	192
(TD-91)	195
Pinion (T-61 and TD-61)	191
(TD-91)	194
Shaft (T-61 and TD-61)	191
(TD-91)	194
Shaft, track frame pivot (T-61 and TD-61)	192
(TD-91)	195
Sprocket Cut-Away (T-61 and TD-61)	192
(TD-91)	195
Shield, sprocket drive housing	196

PRINTED IN UNITED STATES OF AMERICA

INDEX TO UNITS—Continued

DESCRIPTION	Page
HYDRAULIC SYSTEM	
Control Valve Connections and Hose	200
Couplings, break-away and self-sealing	198
Cylinder	201
List of Parts (Hydraulic Equipment)	198
Pump (Pesco)	202
(Thompson)	202
Pump, flange and hose	200
Remote Control Tractor	197
Reservoir, safety valve and connections	203
FUEL SYSTEM	
Bracket, air cleaner (T-61)	43
(TD-61 and TD-91)	45
Carburetor (T-61)	47
(TD-61 and TD-91)	49
Chamber, pre-combustion (TD-61 and TD-91)	60
Cleaner, air (T-61)	44
(TD-61 and TD-91)	45
Connections, air cleaner (T-61)	43
(TD-61 and TD-91)	44
Extension, air cleaner pipe	45
Filter, watch dog fuel (TD-61 and TD-91)	61
Gear and Connection fuel Injection (TD-61)	56
(TD-91)	59
Nozzle Injection (TD-61 and TD-91)	60
Piping fuel tank (T-61 and TD-61)	52
(TD-91)	54
Pipes, fuel injection (TD-61)	56
(TD-91)	58
Pre-cleaner, air (Donaldson)	
Glass Body	46
Plastic Body	45
Pump, fuel and connections (T-61)	47
Pump, fuel injection (TD-61)	57
(TD-91)	59
Strainer	
Fuel (T-61 and TD-61)	52
(TD-91)	54
Gasoline (T-61 and TD-61)	53
(TD-91)	55
Tank, fuel (T-61 and TD-61)	52
(TD-91)	54
Trap, water (TD-61 and TD-91)	61
GOVERNOR	
Connections, governor (T-61)	69
Governor (T-61)	70

DESCRIPTION	Page
LUBRICATING SYSTEM	
Balancer, engine (TD-91)	76
Filter	
Auxiliary (TD-61 and TD-91)	77
Final (TD-61 and TD-91)	77
Lubricating Oil (T-61)	71
(TD-61 and TD-91)	72
Pan, crankcase oil (T-61)	73
(TD-61)	74
(TD-91)	75
Pump, lubricating oil (T-61)	73
(TD-61)	74
(TD-91)	76
MAIN FRAME	
Channel, main frame side (T-61 and TD-61)	145
(TD-91)	146
Cover, main frame (T-61 and TD-61)	147
(TD-91)	149
Guide, track frame (T-61 and TD-61)	145
(TD-91)	146
Bracket (T-61 and TD-61)	145
(TD-91)	146
Roller (T-61 and TD-61)	145
(TD-91)	146
Spring, equalizer (T-61 and TD-61)	151
(TD-91)	152
Spring, equalizer (heavy duty)	153
MISCELLANEOUS EQUIPMENT, ATTACHMENTS, DECALCOMANIAS, GASKET PACKAGE and FIELD SERVICE PACKAGE	
Box (21") Tool	229
Bumper, front	219
Belt, pulley	221
Cap, exhaust rain	231
Control, radiator shutter	218
Crank, starting	223
Decalcomanias	237
Drawbar	204
Guard	
Crankcase	216
Radiator	219
Hook, pull	216

PRINTED IN UNITED STATES OF AMERICA

INDEX TO UNITS—Continued

DESCRIPTION	Page
MISCELLANEOUS EQUIPMENT, ATTACHMENTS, DECALCOMANIAS, GASKET PACKAGE and FIELD SERVICE PACKAGE—Continued	
Lubricator	
Gun type	229
Tank type	231
Meter, electric hour	232
Meter, service	234
Odometer	233
Packages and Sets, field service	235
Power take-off	
Front coupling	223
Rear	222
Rear (reduced speed)	224
Primer, chevron pressure (diesel starting) (TD-61 and TD-91)	225
Sets, assorted package	235
Shutter, radiator	218
Tools	
Tools (standard)	226
Tool Set (17 tools and tool box)	227
Tool Set (43 tools and tool box)	228
SHEET METAL, FENDERS, HOOD SIDE SHEETS and SIDE DOORS	
Fender	205, 206
Hood (T-61 and TD-61)	206
(TD-91)	206
Side door	207
Side sheets (T-61 and TD-61)	206
(TD-91)	206
SEAT AND SUPPORTS	
Seat and Platform	208
STEERING SYSTEM	
Brakes—steering (T-61 and TD-61)	161
(TD-91)	162
Clutch, steering (T-61 and TD-61)	168
(TD-91)	170
Controls	
Brake, steering (T-61 and TD-61)	161
(TD-91)	162
Clutch, steering (T-61 and TD-61)	164
(TD-91)	165
Gear, drive bevel	166
Shaft, steering clutch release (T-61 and TD-61)	168
(TD-91)	170
TRACK DRIVE	
Brace, track frame diagonal (T-61 and TD-61)	171
(TD-91)	172
Frame, track (T-61 and TD-61) (4-Roller)	175
(TD-91) (4-Roller)	177
Extended (T-61 and TD-61) (5-Roller)	179
(TD-91) (5-Roller)	182
Rigid (T-61 and TD-61) (5-Roller)	179
(TD-91) (5-Roller)	182
Idler	
Front (not large diameter)	183
Front (large diameter)	183
Front Shield	184
Track (T-61 and TD-61)	174
(TD-91)	177
Retainer (T-61 and TD-61)	174
(TD-91)	177
Roller, track (T-61 and TD-61) (4 roller track frame)	175
(T-61 and TD-61) (5 roller track frame)	179
(TD-91) (4 roller track frame)	177
(TD-91) (5 roller track frame)	182
Shield, track roller	185
Shoes, track (T-61 and TD-61)	186
(TD-91)	188
Spring, track (T-61 and TD-61)	175
(TD-91)	177
Track, assembly	173
TRANSMISSION	
Shifter, mechanism gear (T-61 and TD-61)	155
(TD-91)	158
Transmission, two speed reverse (T-61 and TD-61)	157
(TD-91)	160
Transmission, (five speeds forward, one reverse)	
(T-61 and TD-61)	156
(TD-91)	159

NUMERICAL INDEX AND WEIGHTS 242

PRINTED IN UNITED STATES OF AMERICA

LIST OF ABBREVIATIONS

Always use period after abbreviations except after w/, w/o, f/, and those fully capitalized.

al. ..... aluminum
aly-stl. ..... alloy steel
amps. ..... amperes
anl. ..... annealed
approx. ..... approximately
bd-hd. ..... binding head
b-hd. ..... button head
brs. ..... brass
brz. ..... bronze
cd-pltd. ..... cadmium plated
cd-pltd-stl. ..... cadmium plated steel
crg. ..... carriage
cr-pltd. ..... chromium plated
cr-pltd-stl. ..... chromium plated steel
CI ..... cast iron
csk. ..... countersunk
csk-hd. ..... countersunk head
cl-rec-hd. ..... clutch recess head
cone-pt. ..... cone point
contd. ..... continued
cop. ..... copper
cop-pltd. ..... copper plated
c-pin ..... cotter pin
cres. ..... corrosion-resistant-steel (stainless)
cr-rec-hd. ..... cross recess head
cre. ..... corrosion resisting
cup-pt. ..... cup point
cyls. ..... cylinders
dia. ..... diameter
dld. ..... drilled
dld-f/c-pin ..... drilled for cotter pin
dld-f/lkg-wire ..... drilled for locking wire
dog-pt. ..... dog point
f/ ..... for
fil-hd. ..... fillister head
fin-nk. ..... fin neck
f-csk-hd. ..... flat countersunk head
f-fil-hd ..... flat fillister head
f-hd. ..... flat head
f-pt. ..... flat-point
flex. ..... flexible
ft. ..... foot (or feet)
ga. ..... gauge
hd. ..... head
hdls. ..... headless
hex. ..... hexagon
hex-hd. ..... hexagonal-head
hex-soc-hd. ..... hexagon socket head
hp. ..... horsepower
hv. ..... heavy
ID ..... inside diameter
in. ..... inch or inches
lbs. ..... pounds
lentil-hd. ..... lentil head
LH ..... left hand
lkg. ..... locking
mach. ..... machine
MI ..... malleable iron
NC ..... National Coarse Thread
NF ..... National Fine Thread
ni. ..... nickel
ni-pltd-stl. ..... nickel plated steel
No. ..... number
NPT ..... National pipe thread
OC ..... outside circumference
OD ..... outside diameter
ov-hd. ..... oval head
oz. ..... ounce
parkerized-stl. ..... parkerized steel
pltd. ..... plated
pt. ..... point
rd-end ..... round end
rd-hd. ..... round head
rd-pt. ..... round point
reg. ..... regular
RH ..... right hand
SAE ..... Society of Automotive Engineers
sf. ..... semi-finished
slt-hd. ..... slotted head
slt-bd-hd. ..... slotted binding head
slt-fil-hd. ..... slotted fillister head
slt-fl-hd. ..... slotted flat head
slt-hex-hd. ..... slotted hexagon head
slt-pan-hd. ..... slotted pan head
slt-rd-hd. ..... slotted round head
sq. ..... square
sq-hd. ..... square head
sq-nk. ..... square neck
std. ..... standard
std-hd. ..... standard head
stl. ..... steel
T ..... teeth
thd. ..... thread
unfin. ..... unfinished
wagon-box-hd. ..... wagon box head
w/ ..... with
w/brz. ..... with bronze
w/hex. ..... with hexagon
w/o ..... without
zn. ..... zinc
zn-ct. ..... zinc coated
zn-pltd. ..... zinc plated

PRINTED IN UNITED STATES OF AMERICA

REF. NO.	PART NUMBER	DESCRIPTION

CYLINDER HEAD, VALVE COVER, VALVES AND VALVE LEVERS

-11-

CARBURETED ENGINE (T-61)

REF. NO.	PART NUMBER	DESCRIPTION

CYLINDER HEAD, VALVE COVER, VALVES AND VALVE LEVERS — CONTINUED

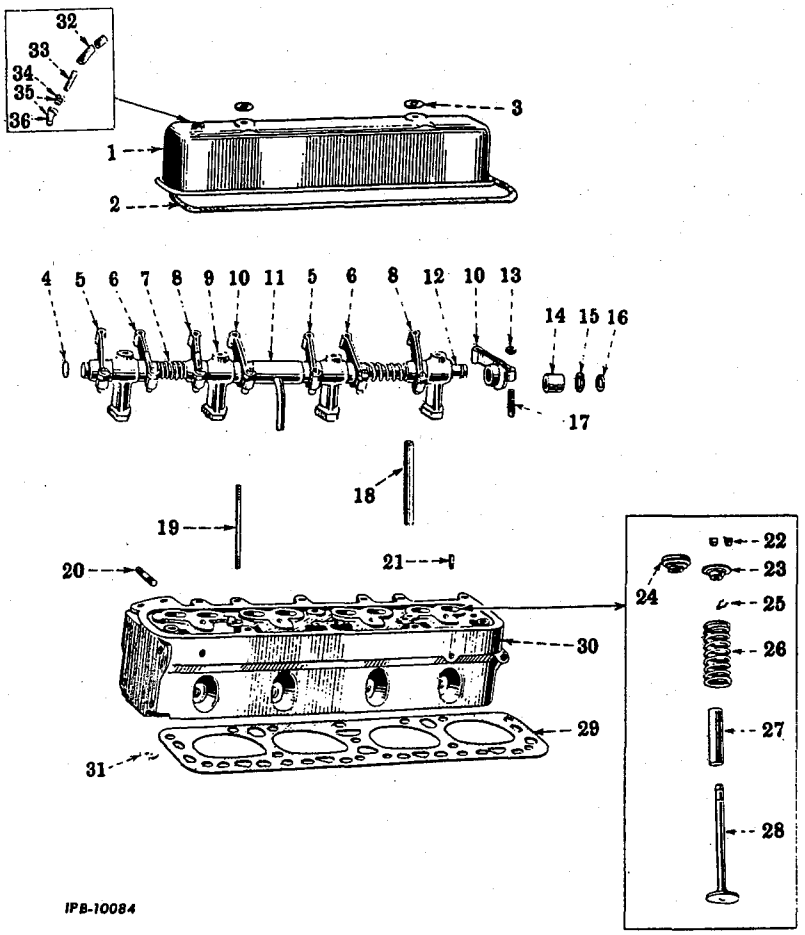

1	363 357 R91	COVER w/PLUG, 143 997 and STIFFENERS, valve
	143 997	PLUG, 1/4" sq-socket, stl. pipe
2	45 952 DB	GASKET, valve cover
3	62 866 D	WASHER, valve cover stud nut (optional with 357 374 R1) (2)
3	357 374 R1	WASHER, valve cover stud nut (optional with 62 866 D) (2)
4	172 528	PLUG, 9/16" expansion (valve lever shaft end) (2)
5	355 455 R91	LEVER, LH exhaust valve (will work for 43 917 DAX) (2)
5	355 671 R92	LEVER, 355 455 R91, w/SCREW, 16 067 DA and NUT, 133 093 R1, LH exhaust valve (will work for 43 917 DAYA) (2)
6	355 456 R91	LEVER, RH intake valve (will work for 43 916 DAX) (2)
6	355 672 R92	LEVER, 355 456 R91, w/SCREW, 16 067 DA and NUT, 133 093 R1, RH intake valve (will work for 43 916 DAYA) (2)
7	45 949 D	SPRING, valve lever (2)
8	355 455 R91	LEVER, LH intake valve (will work for 43 915 DAX) (2)
8	355 671 R92	LEVER, 355 455 R91, w/SCREW, 16 067 DA and NUT, 133 093 R1, LH intake valve (will work for 43 915 DAYA) (2)
9	45 948 DB	BRACKET, valve lever (4)
		3/8 x 3-1/2" hex-hd. cap SCREW (4)
		3/8" external-tooth lock WASHER (4)
10	355 456 R91	LEVER, RH exhaust valve (will work for 43 918 DAX) (2)
10	355 672 R92	LEVER, 355 456 R91, w/SCREW, 16 067 DA and NUT, 133 093 R1, RH exhaust valve (will work for 43 918 DAYA) (2)
11	45 950 DAX	SLEEVE w/TUBE, valve lever shaft oil
12	45 947 DBX	SHAFT w/PLUG, 172 528, valve lever (2)
13	133 093 R1	NUT, valve lever adjusting screw (8)
14	24 564 DA	BUSHING, valve lever (used with 43 915 DAX, 43 916 DAX, 43 917 DAX, 43 918 DAX) (8)

PRINTED IN UNITED STATES OF AMERICA

CARBURETED ENGINE (T-61)

REF. NO.	PART NUMBER	DESCRIPTION
		CYLINDER HEAD, VALVE COVER, VALVES AND VALVE LEVERS — CONTINUED
15	43 374 D	WASHER, valve lever shaft spring (2)
16	43 375 D	RING, valve lever shaft snap (2)
17	16 067 DA	SCREW, valve lever adjusting (8)
18	351 973 R1	SLEEVE, cylinder head stud (2)
19	45 943 D	STUD, valve cover (2) 3/8NF NUT (2)
20	63 459 D	STUD, manifold to cylinder head (6)
21	362 020 R1	PIPE, cylinder head breather
22	41 339 D	KEY, valve spring seat (16)
23	47 277 D	SEAT, upper valve spring (intake) (gasoline) (4)
23	47 277 D	SEAT, upper valve spring (distillate) (8)
24	356 952 R92	ROTOCAP, exhaust valve (gasoline only) (4)
25	41 349 D	RETAINER, valve stem (8)
26	356 951 R1	SPRING, intake valve (4)
26	356 951 R1	SPRING, exhaust valve (4)
27	6 338 DR	GUIDE, valve (distillate) (8)
27	8 044 DR	GUIDE, valve (gasoline) (8)
28	48 958 D	VALVE, intake (distillate) (4)
28	48 959 DA	VALVE, exhaust (distillate) (4)
28	362 435 R1	VALVE, intake (gasoline) (4)
29	48 957 DE	GASKET, cylinder head
30	362 433 R11	HEAD w/STUDS and valve GUIDES ASSEMBLY, cylinder (gasoline) (Composed of - §8 GUIDE; §1 HEAD; 4 INSERT 361 182 R2; §2 SLEEVE; 2 STUD 45 943 D; 6 STUD 63 459 D)
30	362 434 R91	HEAD, 362 433 R11, w/VALVES and ROTOCAP ASSEMBLY, cylinder (gasoline) (Composed of - 1 HEAD 362 433 R1; 16 KEY 41 339 D; 8 RETAINER 41 349 D; 4 ROTOCAP 356 952 R92; 4 SEAT 47 277 D; 8 SPRING 356 951 R1; 4 VALVE 362 435 R1; 4 VALVE 362 436 R1)
30	8 704 DBXA	HEAD w/STUDS and valve GUIDES ASSEMBLY, cylinder (distillate) (Composed of - §8 GUIDE; §1 HEAD; 4 INSERT 6 337 D; 1 PLUG 143 997; §2 SLEEVE; 2 STUD 45 943 D; 6 STUD 63 459 D)
	143 997	PLUG, 1/4" sq-socket-hd. pipe
30	8 704 DBYA	HEAD, 8 704 DBXA, w/VALVES ASSEMBLY, cylinder (distillate) (Composed of - 1 HEAD 8 704 DBXA; 16 KEY 1 339 D; 8 RETAINER 41 349 D; 8 SEAT 47 277 D; 8 SPRING 356 951 R1; 4 VALVE 48 958 D; 4 VALVE 48 959 DA)
31	6 337 D	INSERT, exhaust valve seat (distillate) (4)
31	361 182 R2	INSERT, exhaust valve seat (stellite faced) (gasoline) (4)

-12-

CARBURETED ENGINE (T-61)

REF. NO.	PART NUMBER	DESCRIPTION
		CYLINDER HEAD, VALVE COVER, VALVES AND VALVE LEVERS — CONTINUED
32	364 441 R1	HOSE, air cleaner to valve cover (5/16 x 8-3/4" long)
33	364 252 R11	PIPE, breather
34	37 165 D	NUT, breather pipe connector
35	361 718 R11	ELBOW, 361 718 R1, w/NUT, 37 165 D, breather pipe
36	361 718 R1	ELBOW, breather pipe
	354 476 R95	GASKET SET, valve grinding
	64 889 D	SHAFT, valve lever (includes two SHAFTS, 45 947 DBX, and SLEEVE, 45 950 DAX)
	276 198 R92	ATTACHMENT, distillate burning (See NOTE) (Composed of - 1 ADAPTER 276 349 R1; 1 BAFFLE 56 425 D; 1 BELLCRANK 51 745 D; 1 BODY 31 279 D; 2 BOLT 14 993 R1; 1 BRACKET 50 761 DA; 1 BRACKET 53 674 D; 1 CARBURETOR 53 914 DC; 1 CLIP 276 346 R1; 1 COLLAR 50 762 DA; 1 CONNECTOR 38 026 DM; 1 COUPLING 51 933 D; 1 CRANK 274 608 R11; 1 ELBOW 37 323 D; 1 GASKET 45 952 DE; 1 GASKET 45 986 D; 1 GASKET 46 173 DC; 1 GASKET 48 957 DD; 1 GASKET 52 808 D; 1 GLAND 31 284 D; 1 HANDLE 49 246 DX; 1 HEAD 8 704 DBYA; 1 MANIFOLD 363 153 R11; 2 NUT 37 165 D; 1 NUT 29 899 D; 3 NUT 93 082 H; 1 PACKING 31 285 D; 1 PIPE 276 341 R1; 1 ROD 47 309 D; 1 ROD 50 765 DX; 1 ROD 51 744 D; 1 ROD 276 344 R91; 1 SCREW 52 756 D; 1 SHAFT 49 045 DA; 1 SHIELD 49 046 DX; 1 SHUTTER 275 391 R91; 1 SLEEVE SET 366 495 R91; 2 SPACER 276 342 R1; 1 SPACER 50 763 DA; 1 SPRING 31 378 D; 1 SUPPORT 47 310 DX; 1 TANK 46 308 DBXB; 1 TEE 19 255 R1; 1 TUBE 276 343 R11; 1 TUBE 276 345 R11; 1 TUBE 276 348 R91; 1 TUBE 276 381 R11; 1 UNIT, ignition 357 934 R92; 1 VALVE 6 777 DA; 1 VALVE 31 283 D; 1 VALVE 50 500 DA; 1 VALVE 56 998 DA; 1 VALVE 276 347 R91; 3 WASHER Q 1 597)

NOTE - Factory Application - Order on machine order form.
Field Application - Order through regular service parts channels.
§ - Not Furnished Separately.

CARBURETED ENGINE (T-61)

REF. NO.	PART NUMBER	DESCRIPTION

CRANKCASE, FRONT COVER, FRONT AND REAR ENGINE SUPPORTS, CAMSHAFT AND RELATED PARTS

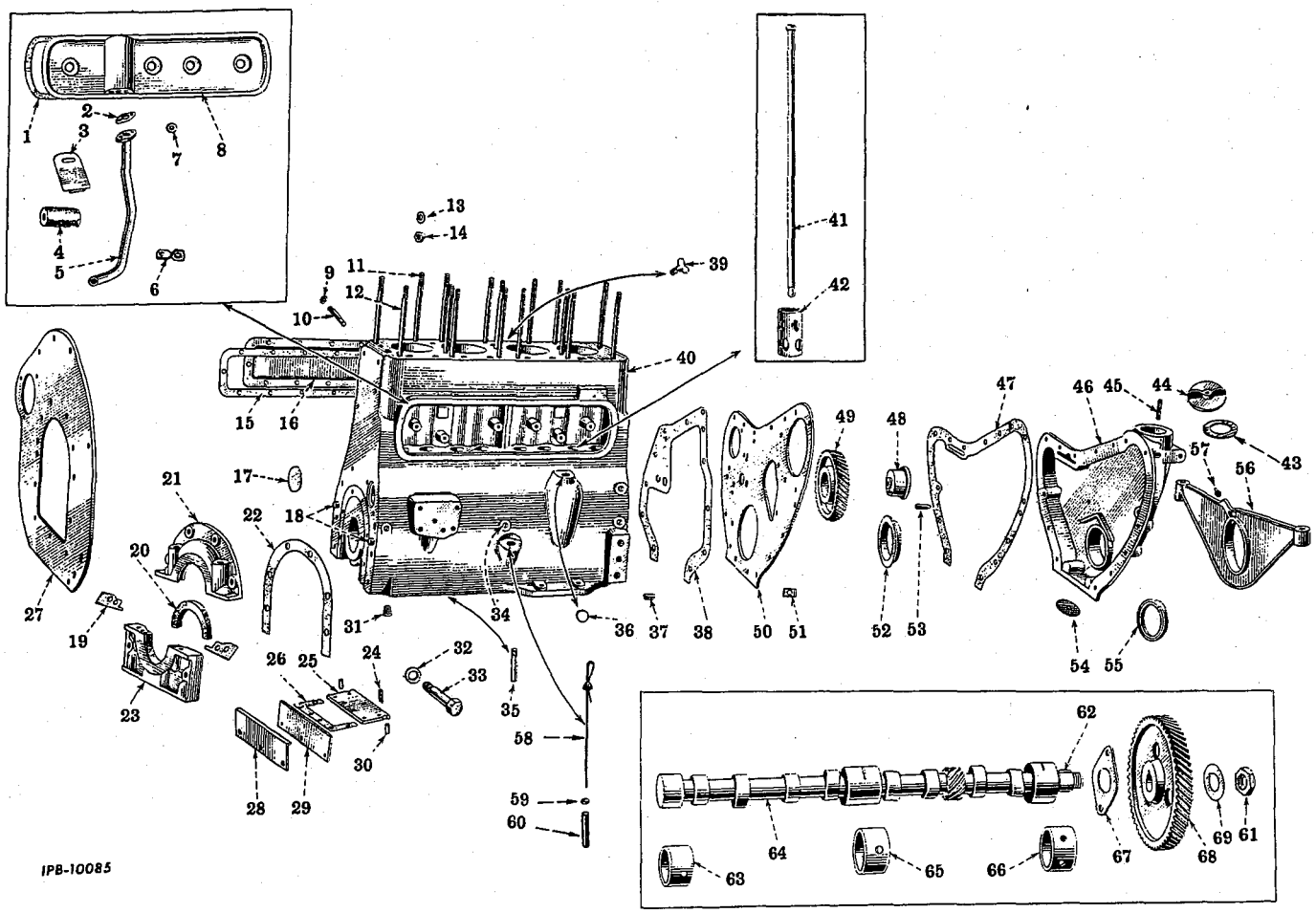

-13-

CARBURETED ENGINE (T-61)

REF. NO.	PART NUMBER	DESCRIPTION

CRANKCASE, FRONT COVER, FRONT AND REAR ENGINE SUPPORTS, CAMSHAFT AND RELATED PARTS – CONTINUED

1	49 029 DB	GASKET, push rod chamber side plate
2	46 700 D	GASKET, breather pipe flange
3	46 696 DX	BAFFLE w/PLATE, breather No. 8 x 3/8" slt-rd-hd. mach. SCREW (2) No. 8 lock WASHER (2)
4	50 975 D	ELEMENT, breather
5	49 028 DAX	PIPE w/FLANGE, breather 5/16NF x 7/8" hex-hd. cap SCREW (2) 5/16" lock WASHER (2)
6	50 496 D	CLIP, breather pipe
7	62 866 D	WASHER, push rod chamber side plate bolt (optional with 357 374 R1) (4)
7	357 374 R1	WASHER, push rod chamber side plate bolt (optional with 62 866 D) (4)
8	49 025 DX	PLATE, side push rod chamber 3/8 x 7/8" hex-hd. cap SCREW (4) No. 8 NUT (2)
9	28 950 D	WASHER, water header stud nut (8)
9	28 950 D	WASHER, water header cap screw (8)
10	29 070 D	STUD, water header (8) 5/16NF NUT (light) (8)
11	49 023 DA	STUD, cylinder head (long) (2)
12	46 117 D	STUD, cylinder head (short) (14)
13	60 580 D	WASHER, cylinder head stud (2)
14	4 097 DA	NUT, cylinder head stud (16)
15	46 128 DB	GASKET, water header
16	46 125 DA	HEADER w/COVER, water 5/16 x 5/8" hex-hd. cap SCREW (8)
17	172 593	PLUG, 2-1/8" expansion (camshaft rear bearing)
18	25 086 DA	DOWEL, rear engine support (2)
19	46 121 D	GASKET, crankshaft rear oil seal retainer (center) (2)
20	57 613 DA	FELT, crankshaft rear oil seal (2)
21	9 264 D	RETAINER, crankshaft rear oil seal (upper) (optional with 6 363 DD)
21	6 363 DD	RETAINER, crankshaft rear oil seal (upper) (optional with 9 264 D) 3/8 x 1" hex-hd. cap SCREW (4) 3/8" lock WASHER (4)
	Q 1 597	WASHER, 13/32 x 3/4" x No. 16 ga. (4)
22	46 131 DA	GASKET, crankshaft rear oil seal retainer

PRINTED IN UNITED STATES OF AMERICA

CARBURETED ENGINE (T-61)

REF. NO.	PART NUMBER	DESCRIPTION
		CRANKCASE, FRONT COVER, FRONT AND REAR ENGINE SUPPORTS, CAMSHAFT AND RELATED PARTS — CONTINUED
23	9 265 D	RETAINER, crankshaft rear oil seal (lower) (optional with 6 364 DC)
23	6 364 DC	RETAINER, crankshaft rear oil seal (lower) (optional with 9 265 D) 3/8 x 1-3/8" hex-hd. cap SCREW (2) 3/8 x 2-3/4" hex-hd. cap SCREW (2) 3/8" lock WASHER (4)
	Q 1 597	WASHER, 13/32 x 3/4" x No. 16 ga. (4)
24	46 135 D	STUD, crankshaft rear oil seal retainer plate 3/8 NF NUT 3/8" lock WASHER
25	46 133 DX	PLATE w/STUD, 46 135 D, crankshaft rear oil seal retainer 3/8 x 7/8" hex-hd. cap SCREW (4) 3/8" lock WASHER (4)
26	46 134 D	GASKET, crankshaft rear oil seal retainer plate
27	46 108 D	SUPPORT, rear engine 1/2 x 1" hex-hd. cap SCREW (8) 1/2" lock WASHER (8)
28	46 137 D	GASKET, crankcase rear dust seal
29	46 136 D	SEAL, rear crankcase dust 3/8NF x 3/4" hex-hd. cap SCREW (3) 3/8" lock WASHER (3)
30	25 093 DA	PLUG, crankshaft rear oil seal retainer plate felt (2)
31	104 942	PLUG, crankcase locating hole cork (No. 6, 2X grade, 9/16 x 3/4 x 15/16" long (2)
32	366 098 R1	WASHER, crankshaft bearing cap bolt (will work for 46 124 D) (6)
33	366 097 R1	BOLT, crankshaft bearing cap (will work for 48 872 D) (6)
34	50 410 DA	PLUG, 1/8" oil header (3)
35	45 397 D	TUBE, oil filter drain (inside of crankcase)
36	172 545	PLUG, 1" distributor hole expansion
37	45 391 D	PIN, crankcase front plate dowel (2)
38	46 181 DB	GASKET, crankcase front plate
39	45 314 DC	PLUG, water drain
40	356 981 R93	CRANKCASE ASSEMBLY, less cylinder SLEEVES and PISTONS (for service order CRANKCASE, 356 981 R93 together with oil level GAUGE, 363 639 R11) (Composed of - 1 BEARING 53 422 DA 1 BEARING 53 423 DB 1 BEARING 53 424 DA 6 BOLT 366 097 R1 §2 CAP §1 CAP 2 CORK 104 942 1 COVER 29 710 D §1 CRANKCASE 1 GAUGE 363 639 R11 1 GASKET 24 524 D 2 PIN 25 086 DA 2 PIN 45 391 D 1 PLUG 45 314 DC 3 PLUG 50 410 DA 2 PLUG 126 045 1 PLUG 172 545 1 PLUG 172 593 1 SLEEVE 363 634 R1 8 STUD 29 070 D 12 STUD 46 117 D 4 STUD 49 023 DA 6 WASHER 366 098 R1)

CARBURETED ENGINE (T-61)

REF. NO.	PART NUMBER	DESCRIPTION
		CRANKCASE, FRONT COVER, FRONT AND REAR ENGINE SUPPORTS, CAMSHAFT AND RELATED PARTS — CONTINUED
40	356 982 R93	CRANKCASE, 356 981 R93, w/set of cylinder SLEEVES and PISTONS, 364 923 R91
	126 045	PLUG, 3/8" csk-hdls. pipe (2)
41	48 830 DA	ROD, valve push (optional with 355 072 R91) (8)
41	355 072 R91	ROD, valve push (optional with 48 830 DA) (8)
42	45 956 D	TAPPET, valve (8)
43	364 420 R1	GASKET, oil filler cap
44	4 819 DX	CAP w/GASKET, 364 420 R1, oil filler
45	363 231 R1	STUD, oil filler cap
46	354 955 R31	COVER ASSEMBLY, front crankcase (not service meter) (Composed of - §1 COVER 1 DEFLECTOR 46 129 D 1 POINTER 46 258 D 1 SCREEN 363 232 R1 1 SEAL 53 872 D 1 STUD 363 231 R1) 3/8 x 7/8" hex-hd. cap SCREW (2) 3/8 x 1-3/8" hex-hd. cap SCREW (7) 3/8" lock WASHER (9)
46	355 121 R21	COVER ASSEMBLY, front crankcase (service meter) (Composed of - §1 COVER 1 DEFLECTOR 46 129 D 1 POINTER 46 258 D 1 SCREEN 363 232 R1 1 SEAL 53 872 D 1 STUD 363 231 R1)
47	354 956 R2	GASKET, crankcase front cover
48	6 239 DX	SHAFT w/dowel PIN, idler gear 1/2 x 1-1/2" hex-hd. cap SCREW 1/2" lock WASHER
49	6 362 DX	GEAR w/BUSHING, idler (41 T)
50	354 953 R11	PLATE, crankcase front 3/8 x 3/4" hex-hd. cap SCREW (4)
51	354 489 R1	LOCK, crankcase front plate screw (4)
52	46 129 D	DEFLECTOR, oil crankshaft front
53	46 258 D	POINTER, timing
54	363 232 R1	SCREEN, oil filler
55	53 872 D	OIL SEAL, crankshaft (front)
56	275 800 R1	SUPPORT, front engine 1/2NF x 3-1/4" hex-hd. cap SCREW (2) 1/2" lock WASHER (2) 1/2NF NUT (2)
57	109 461	FITTING, front engine support lubrication (Lincoln 5000) (optional with 119 512)
57	119 512	FITTING, front engine support lubrication (Alemite 1610) (optional with 109 461)
58	365 592 R11	GAUGE w/WASHER, 34 259 H, oil lever (will work for 363 639 R11)
58	363 639 R11	GAUGE w/WASHER, 34 259 H, oil level (order 365 592 R11)
59	34 259 H	WASHER, oil level gauge dust shield
60	363 634 R1	SLEEVE, oil level gauge
61	23 174 V	NUT, RH thread camshaft gear (C-264 170 850 up, C-281 1123 to 3228)

§ - Not Furnished Separately.

CARBURETED ENGINE (T-61)

REF. NO.	PART NUMBER	DESCRIPTION

CRANKCASE, FRONT COVER, FRONT AND REAR ENGINE SUPPORTS, CAMSHAFT AND RELATED PARTS — CONTINUED

61	368 598 R1	NUT, LH thread camshaft gear (C-281 - 3229 up)
62	127 559	KEY, 1/4 x 3/4" camshaft gear (woodruff No. 91)
63	53 424 DA	BEARING, camshaft (rear) (will work for 46 120 DA)
64	48 196 DBX	CAMSHAFT w/KEY, 127 559 and NUT, 368 598 R1 (will work for 48 196 DA)
65	53 423 DB	BEARING, camshaft (center)
66	53 422 DA	BEARING, camshaft (front)
67	43 249 D	PLATE, camshaft thrust 3/8 x 3/4" hex-hd. cap SCREW (2) 3/8" lock WASHER (2)
68	6 760 DB	GEAR, camshaft (58 T)
69	16 025 D	LOCK, camshaft gear nut

CONNECTING RODS AND SLEEVE SETS

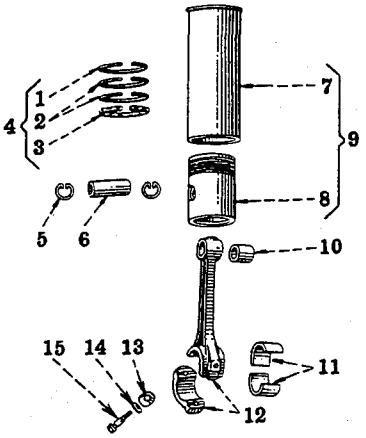

For C-264 Engine

-15-

CARBURETED ENGINE (T-61)

REF. NO.	PART NUMBER	DESCRIPTION

CRANKCASE, FRONT COVER, FRONT AND REAR ENGINE SUPPORTS, CAMSHAFT AND RELATED PARTS — CONTINUED

	29 710 D	COVER, fuel pump opening (for power units not equipped with fuel pump) 5/16 x 1/2" hex-hd. cap SCREW (2) 5/16" lock WASHER (2)
	24 524 D	GASKET, fuel pump opening cover
	48 384 D	SHIM, front engine support (heavy) (X)
	48 385 D	SHIM, front engine support (light) (X)
		WIRE, lock, crankshaft bearing cap screw (16 ga. x 10-1/2" long) (order 278 027 R1) (3)
	278 027 R1	WIRE, locking bulk (customer must specify length required (16 ga.) (X)

X - As Required.

CONNECTING RODS AND SLEEVE SETS — CONTINUED

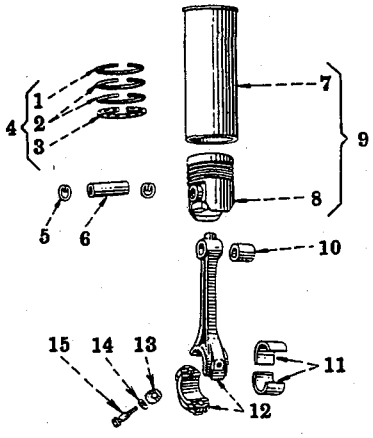

For C-281 Engine

IPA-52228

⊗ KEY TO UNITS -
A - Used on Engines with Serial Number prefix C-264 (4 x 5-1/4)

B - Used on Engines with Serial Number prefix C-281 (4-1/8 x 5-1/4)

⊗ Letters of these units correspond with those shown following the description of the parts in the list below and identifies the unit for which the part is used. Items without letters after the description indicates the part is used for all units.

1	356 966 R1	RING, compression piston (top or first groove) (for aluminum pistons) (Perfect Circle) (optional with 357 617 R1) (4 for Unit A)
1	357 617 R1	RING, compression piston (top or first groove) (for aluminum pistons) (Wilkening) (optional with 356 966 R1) (4 for Unit A)
1	357 228 R1	RING, compression piston (top or first groove) (for gray iron pistons) (Perfect Circle) (optional with 357 715 R1) (distillate) (4 for Unit A)
1	357 715 R1	RING, compression piston (top or first groove) (for gray iron pistons) (Wilkening) (optional with 357 228 R1) (distillate) (4 for Unit A)
1	366 491 R1	RING, compression piston (top or first groove) (for aluminum pistons) (gasoline or distillate) (will work for 366 488 R1) (4 for Unit B)
2	356 967 R1	RING, compression piston (second or third groove) (Perfect Circle) (optional with 357 618 R1) (distillate) (8 for Unit A)
2	357 618 R1	RING, compression piston (second or third groove) (Wilkening) (optional with 356 967 R1) (distillate) (8 for Unit A)

PRINTED IN UNITED STATES OF AMERICA

REF. NO.	PART NUMBER	DESCRIPTION
		CONNECTING RODS AND SLEEVE SETS — Continued
2	366 489 R1	RING, compression piston (second or third groove) (Perfect Circle) (gasoline or distillate) (8 for Unit B)
3	356 968 R1	RING, oil piston (fourth groove) (Perfect Circle) (distillate) (optional with 357 619 R1) (4 for Unit A)
3	357 619 R1	RING, oil piston (fourth groove) (Wilkening) (distillate) (optional with 356 968 R1) (4 for Unit A)
3	366 492 R1	RING, oil piston (fourth groove) (Perfect Circle) (distillate or gasoline) (will work for 366 490 R1) (4 for Unit B)
4	356 973 R91	RING SET, piston (for aluminum pistons) (consists of twelve compression RING and four oil control RING) (2-in-1 chrome) (gasoline and distillate) (Unit A)
4	366 493 R91	RING SET, piston (consists of twelve compression RING and four oil control RING) (gasoline and distillate) (Unit B)
5	364 930 R1	RING, piston pin retainer (8)
6	364 928 R1	PIN, piston (standard) (4)
6	364 929 R1	PIN, piston (.005" oversize) (4)
7		SLEEVE, cylinder (order cylinder sleeve with piston and rings, assembly for standard or high altitude) (4)
8		PISTON (order cylinder sleeve with piston and rings, assembly for standard or high altitude) (4)
9	364 923 R91	SLEEVE SET, crankcase (consists of four SLEEVES, with PISTONS and RINGS, 364 922 R91) (gasoline) (standard) (Unit A)
9	366 476 R91	SLEEVE SET, crankcase (consists of four SLEEVES, with PISTONS and RINGS, assembly 366 477 R91) (gasoline) (standard) (Unit B)
9	364 922 R91	SLEEVE w/PISTON and RINGS ASSEMBLY, cylinder (gasoline) (standard) (4 for Unit A) (Composed of - 1 PIN 364 928 R1; §1 PISTON; 2 RING 364 930 R1; 1 RING 356 966 R1; 2 RING 356 967 R1; 1 RING 356 968 R1; §1 SLEEVE)
9	366 477 R91	SLEEVE w/PISTON and RING ASSEMBLY, cylinder (gasoline) (standard) (4 for Unit B) (Composed of - 1 PIN 364 928 R1; §1 PISTON; 2 RING 364 930 R1; 1 RING 366 491 R1; 2 RING 366 489 R1; 1 RING 366 492 R1; §1 SLEEVE)
9	364 953 R91	SLEEVE SET, crankcase (consists of four SLEEVES, with PISTONS and RINGS, 364 960 R91) (gasoline) (5,000 ft. altitude) (Unit A)

REF. NO.	PART NUMBER	DESCRIPTION
		CONNECTING RODS AND SLEEVE SETS — Continued
9	366 513 R91	SLEEVE SET, crankcase (consists of four SLEEVES, with PISTONS and RINGS, 366 520 R91) (gasoline) (high altitude) (Unit B)
9	364 960 R91	SLEEVE w/PISTON and RINGS ASSEMBLY, cylinder (gasoline) (5,000 ft. altitude) (4 for Unit A) (Composed of - 1 PIN 364 928 R1; §1 PISTON; 2 RING 364 930 R1; 1 RING 356 966 R1; 2 RING 356 967 R1; 1 RING 356 968 R1; §1 SLEEVE)
9	366 520 R91	SLEEVE w/PISTON and RING ASSEMBLY, cylinder (aluminum) (gasoline) (high altitude) (4 for Unit B) (Composed of - 1 PIN 364 928 R1; §1 PISTON; 2 RING 364 930 R1; 1 RING 366 491 R1; 2 RING 366 489 R1; 1 RING 366 492 R1; §1 SLEEVE)
9	364 957 R91	SLEEVE SET, crankcase (aluminum) (consists of four SLEEVE, with PISTON and RING, 364 970 R91) (gasoline) (8,000 ft. altitude) (Unit A)
9	364 970 R91	SLEEVE w/PISTON and RING ASSEMBLY, cylinder (aluminum) (gasoline) (8,000 ft. altitude) (4 for Unit A) (Composed of - 1 PIN 364 928 R1; §1 PISTON; 2 RING 364 930 R1; 1 RING 356 966 R1; 2 RING 356 967 R1; 1 RING 356 968 R1; §1 SLEEVE)
9	365 230 R91	SLEEVE SET, crankcase (consists of four SLEEVE, with PISTON and RING, 365 229 R91) (distillate) (Unit A)
9	366 495 R91	SLEEVE SET, crankcase (consists of four SLEEVE, with PISTON and RING, 366 496 R91) (distillate) (Unit B)
9	365 229 R91	SLEEVE w/PISTON and RING ASSEMBLY, cylinder (distillate) (4 for Unit A) (Composed of - 1 PIN 364 928 R1; §1 PISTON; 2 RING 364 930 R1; 2 RING 356 967 R1; 1 RING 356 968 R1; 1 RING 357 228 R1; §1 SLEEVE)
9	366 496 R91	SLEEVE w/PISTON and RING ASSEMBLY, cylinder (distillate) (4 for Unit B) (Composed of - 1 PIN 364 928 R1; §1 PISTON; 2 RING 364 930 R1; 2 RING 366 489 R1; 1 RING 366 491 R1; 1 RING 366 492 R1; §1 SLEEVE)
9	364 955 R91	SLEEVE SET, crankcase (consists of four SLEEVE, with PISTON and RING, 364 965 R91) (distillate) (5,000 ft. altitude) (Unit A)

§ - Not Furnished Separately

REF. NO.	PART NUMBER	DESCRIPTION

CONNECTING RODS AND SLEEVE SETS — CONTINUED

9	366 515 R91	SLEEVE SET, crankcase (consists of four SLEEVE, with PISTON and RING, 366 526 R91) (high altitude) (distillate) (Unit B)
9	364 965 R91	SLEEVE w/PISTON and RING ASSEMBLY, cylinder (distillate) (5,000 ft. altitude) (4 for Unit A)
		(Composed of -
		1 PIN 364 928 R1
		§1 PISTON
		2 RING 364 930 R1
		2 RING 356 967 R1
		1 RING 356 968 R1
		1 RING 357 228 R1
		§1 SLEEVE)
9	366 526 R91	SLEEVE w/PISTON and RING ASSEMBLY, cylinder (distillate) (5,000 ft. altitude) (4 for Unit B)
		(Composed of -
		1 PIN 364 928 R1
		§1 PISTON
		2 RING 364 930 R1
		2 RING 366 489 R1
		1 RING 366 491 R1
		1 RING 366 492 R1
		§1 SLEEVE)
10	364 921 R1	BUSHING, piston pin (4)

CRANKSHAFT AND RELATED PARTS, DRIVE PULLEY AND FLYWHEEL

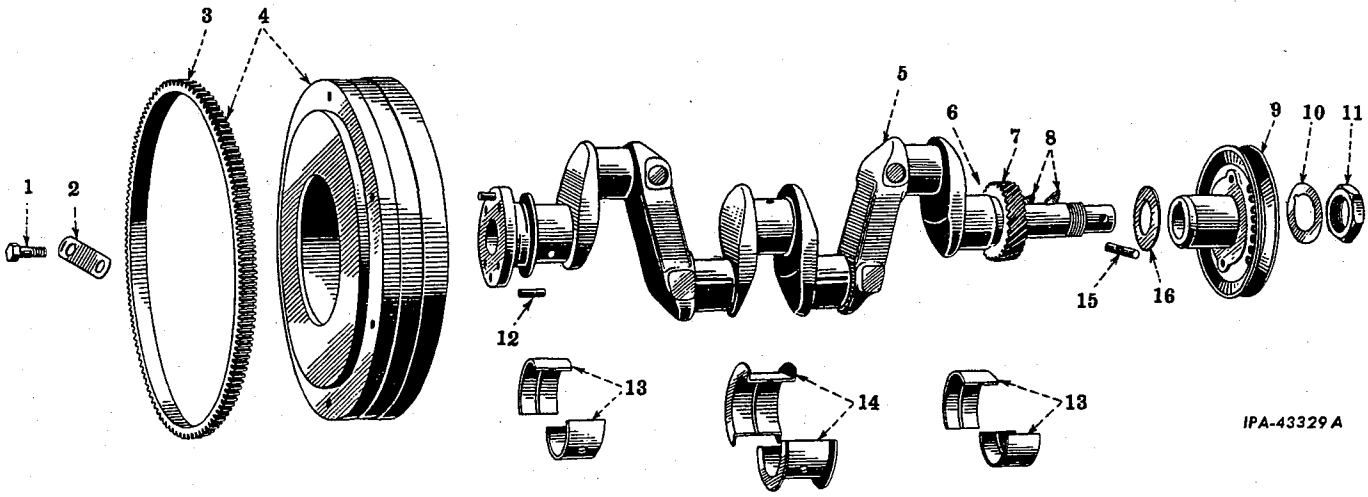

1	43 832 D	BOLT, flywheel to crankshaft (4)
2	45 613 D	LOCK, flywheel to crankshaft bolt (2)
3	47 874 DD	GEAR, flywheel ring
4	6 275 DXC	FLYWHEEL w/GEAR, 47 874 DD, and LUBRICATOR, Q 3 657
	104 941	CORK, No. 5 flywheel balancing hole (standard) (optional with 104 942) (X)
	104 942	CORK, No. 6 flywheel balancing hole (standard) (optional with 104 941) (X)

-17-

CARBURETED ENGINE (T-61)

REF. NO.	PART NUMBER	DESCRIPTION

CONNECTING RODS AND SLEEVE SETS — CONTINUED

11	356 957 R11	BEARING, connecting rod (2 halves) (standard) (4)
11	356 959 R11	BEARING, connecting rod (2 halves) (.002" undersize) (4)
11	360 203 R11	BEARING, connecting rod (2 halves) (.003" undersize) (4)
11	356 958 R11	BEARING, connecting rod (2 halves) (.030" undersize) (4)
11	356 960 R11	BEARING, connecting rod (2 halves) (.032" undersize) (4)
11	367 883 R91	BEARING SET, connecting rod (consists of four BEARING, 356 957 R11) (standard) (Unit B)
12	364 920 R11	ROD ASSEMBLY, connecting (4)
		(Composed of -
		2 BOLT 63 120 D
		1 BUSHING 364 921 R1
		§1 CAP
		2 LOCK 47 496 DB
		§1 ROD
		2 WASHER 63 116 D)
13	47 496 DB	LOCK, connecting rod bolt (8)
14	63 116 D	WASHER, connecting rod bolt (8)
15	63 120 D	BOLT, connecting rod (8)

§ - Not Furnished Separately

CRANKSHAFT AND RELATED PARTS, DRIVE PULLEY AND FLYWHEEL — CONTINUED

5	353 746 R94	CRANKSHAFT w/BEARING ASSEMBLY (standard)
		(Composed of -
		4 BEARING 356 957 R11
		2 BEARING 356 985 R11
		1 BEARING 356 986 R11
		§1 CRANKSHAFT
		1 NUT 4 253 D
		2 PIN 46 923 D)
6	124 551	KEY, 1/4 x 7/8" ni-pltd-stl. (Woodruff) (crankshaft pinion)

§ - Not Furnished Separately
X - As Required.

-18-

CARBURETED ENGINE (T-61)

REF. NO.	PART NUMBER	DESCRIPTION
		CRANKSHAFT AND RELATED PARTS, DRIVE PULLEY AND FLYWHEEL — Continued
7	45 627 D	GEAR, crankshaft (29 T)
8	124 554	KEY, 5/16 x 1" (Woodruff) (fan drive pulley) (2)
9	6 765 DC	PULLEY, fan drive (not used with front power take-off coupling attachment)
10	4 254 DA	LOCK, crankshaft pinion nut (not used with front power take-off coupling attachment)
11	4 253 D	NUT, crankshaft pinion (not used with front power take-off coupling attachment)
12	46 923 D	PIN, flywheel dowel (2)
13	356 985 R11	BEARING, front and rear crankshaft (2 halves) (standard) (2)
13	356 989 R11	BEARING, front and rear crankshaft (2 halves) (.002" undersize) (2)
13	360 205 R11	BEARING, front and rear crankshaft (2 halves) (.003" undersize) (2)
13	356 987 R11	BEARING, front and rear crankshaft (2 halves) (.030" undersize) (2)
13	356 991 R11	BEARING, front and rear crankshaft (2 halves) (.032" undersize) (2)
14	356 986 R11	BEARING, center crankshaft (2 halves) (standard)
14	356 990 R11	BEARING, center crankshaft (2 halves) (.002" undersize)
14	360 206 R11	BEARING, center crankshaft (2 halves) (.003" undersize)
14	356 988 R11	BEARING, center crankshaft (2 halves) (.030" undersize)
14	356 992 R11	BEARING, center crankshaft (2 halves) (.032" undersize)
15	455 238 R1	PIN, 1/2 x 2-1/2" roll
16	36 796 DA	FLINGER, front oil crankshaft
	ST 208 B	BEARING, clutch pilot (illustrated with Engine Overcenter Clutch)
	367 885 R91	BEARING SET, crankshaft (consists of two BEARING, 356 985 R11 and BEARING, 356 986 R11) (standard)
	Q 3 657	FITTING, clutch pilot bearing lubrication (Lincoln 5045) (optional with 33 794 D)
	33 794 D	FITTING, clutch pilot bearing lubrication (Alemite 1650) (optional with Q 3 657)
	352 749 R94	PACKAGE w/BEARING (.030" undersize) crankshaft field service (Composed of - 4 BEARING 356 958 R11; 2 BEARING 356 987 R11; 1 BEARING 356 988 R11; §1 CRANKSHAFT; 1 NUT 4 253 D; 2 PIN 46 923 D)

§ - Not Furnished Separately

PRINTED IN UNITED STATES OF AMERICA

CARBURETED ENGINE (T-61)

REF. NO.	PART NUMBER	DESCRIPTION

EXHAUST SYSTEM

MANIFOLD AND EXHAUST PIPE

-19-

CARBURETED ENGINE (T-61)

REF. NO.	PART NUMBER	DESCRIPTION

EXHAUST SYSTEM

MANIFOLD AND EXHAUST PIPE - Continued

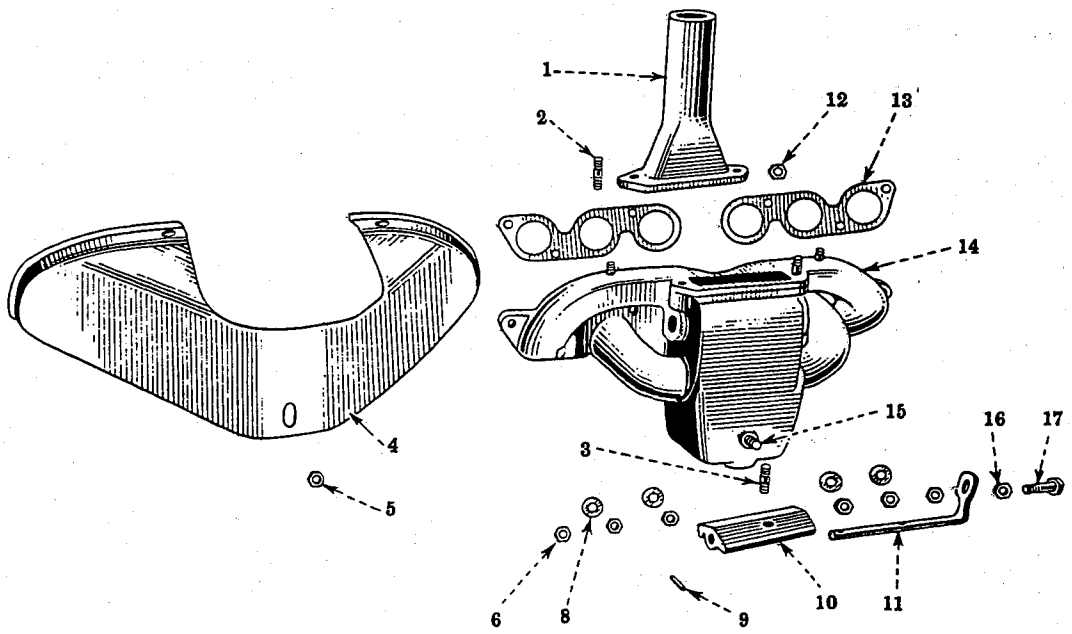

DISTILLATE

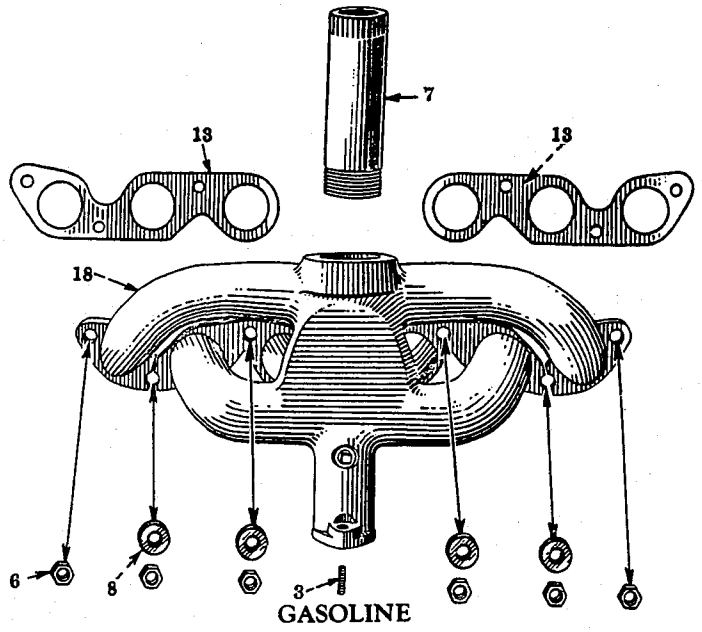

GASOLINE

IPA-43300

1	276 341 R1	PIPE, exhaust (distillate)
2	46 202 D	STUD, exhaust pipe flange (distillate) (2) 7/16" NUT (2)
3	12 215 D	STUD, carburetor (2) 3/8NF (light) NUT (2) 3/8" lock WASHER (2)
4	49 046 DX	SHIELD, manifold heat (distillate)
5	93 082 H Q 1 597	NUT, manifold heat shield stud (distillate) (3) WASHER, 13/32" x 3/4" x No. 16 ga. (3)
6	43 715 D	NUT, manifold to cylinder head stud (6)
7	275 378 R1	PIPE, exhaust (2" dia., 6" long, threaded one end) (gasoline)
8	43 753 D	WASHER, manifold to cylinder head stud (4)

PRINTED IN UNITED STATES OF AMERICA

REF. NO.	PART NUMBER	DESCRIPTION

EXHAUST SYSTEM

MANIFOLD AND EXHAUST PIPE - Continued

9		PIN, manifold heat control valve (groove No. 1, 5/32 x 7/8") (distillate)
10	6 777 DA	VALVE, manifold heat control (distillate)
11	49 045 DA	SHAFT, manifold heat control valve (distillate)
12		Follows Reference No. 2
13	46 173 DC	GASKET, manifold (2)
14	363 153 R11	MANIFOLD ASSEMBLY, exhaust and intake (distillate) (Composed of - §1 MANIFOLD; 2 STUD 12 215 D; 2 STUD 46 202 D; 3 STUD 46 102 D)

EXHAUST SYSTEM

EXHAUST MUFFLER, SPARK ARRESTER AND EXHAUST EXTENSION (T-61)

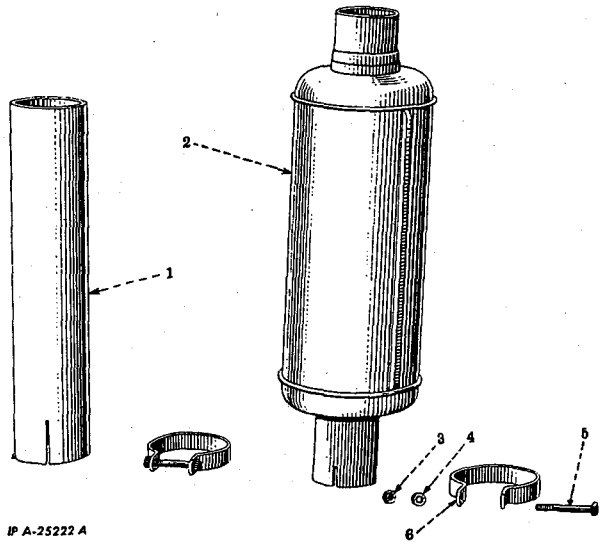

X KEY TO UNITS

A -	264 137 R92	ATTACHMENT, exhaust muffler (See NOTE) (T-61)
B -	51 579 D	ATTACHMENT, spark arrester (See NOTE) (T-61)
C -	53 556 D	ATTACHMENT, exhaust extension (See NOTE) (T-61)

X - Letters of these units correspond with those shown following the description of the parts in the list below and identifies the unit for which the part is used. Items without letters after the description indicates the part is used for all units.

1	51 951 D	EXTENSION, exhaust pipe (Unit C)
2	264 116 R92	MUFFLER, exhaust (Unit A)
3		Follows Reference No. 6
4	13 002 R1	Follows Reference No. 6
5		Follows Reference No. 6

-20-

CARBURETED ENGINE (T-61)

REF. NO.	PART NUMBER	DESCRIPTION

EXHAUST SYSTEM

MANIFOLD AND EXHAUST PIPE - Continued

15	46 102 D	STUD, manifold heat shield (distillate) (3)
16		NUT, 3/8" heat valve shaft lock jam (distillate)
17	52 756 D	SCREW, 3/8 x 1-1/4" sq-hd. cone-pt. heat valve shaft adjusting (distillate)
18	8 035 DDX	MANIFOLD w/PLUG, 103 865 and STUD, 12 215 D, exhaust and intake (gasoline)
	103 865	PLUG, 1/8" sq-hd., C.I. pipe (optional with 103 877)
	103 877	PLUG, 1/8" sq-hd., stl. pipe (optional with 103 865)

§ - Not Furnished Separately.

EXHAUST SYSTEM

EXHAUST MUFFLER, SPARK ARRESTER AND EXHAUST EXTENSION (T-61) - Continued

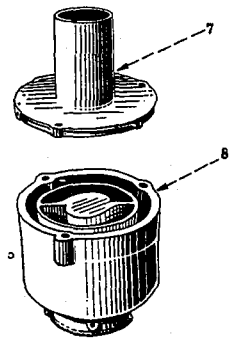

6	31 790 DA	CLAMP, exhaust pipe extension or muffler (Unit A and C)
	13 002 R1	3/8" NUT (Type "A"); 3/8 x 1-1/4" hex-hd. cap SCREW; 3/8" lock WASHER
7	8 163 D	TOP, spark arrester (Unit B); 5/16 x 1-1/4" hex-hd. cap SCREW (3); 3/8 x 1/2 hex-hd. cap SCREW (3); 5/16" lock WASHER (3)
8	8 162 D	BODY, spark arrester (Unit B); 3/8" jam NUT (2); 3/8 x 1" sq-hd. set SCREW (2)

NOTE - Factory Application - Order on Machine Order Form.
Field Application - Order through Regular Service Parts Channels.

CYLINDER HEAD, VALVE COVER, VALVES AND STARTING VALVE MECHANISM

-21-

DIESEL ENGINE (TD-61)

CYLINDER HEAD, VALVE COVER, VALVES AND STARTING VALVE MECHANISM — CONTINUED

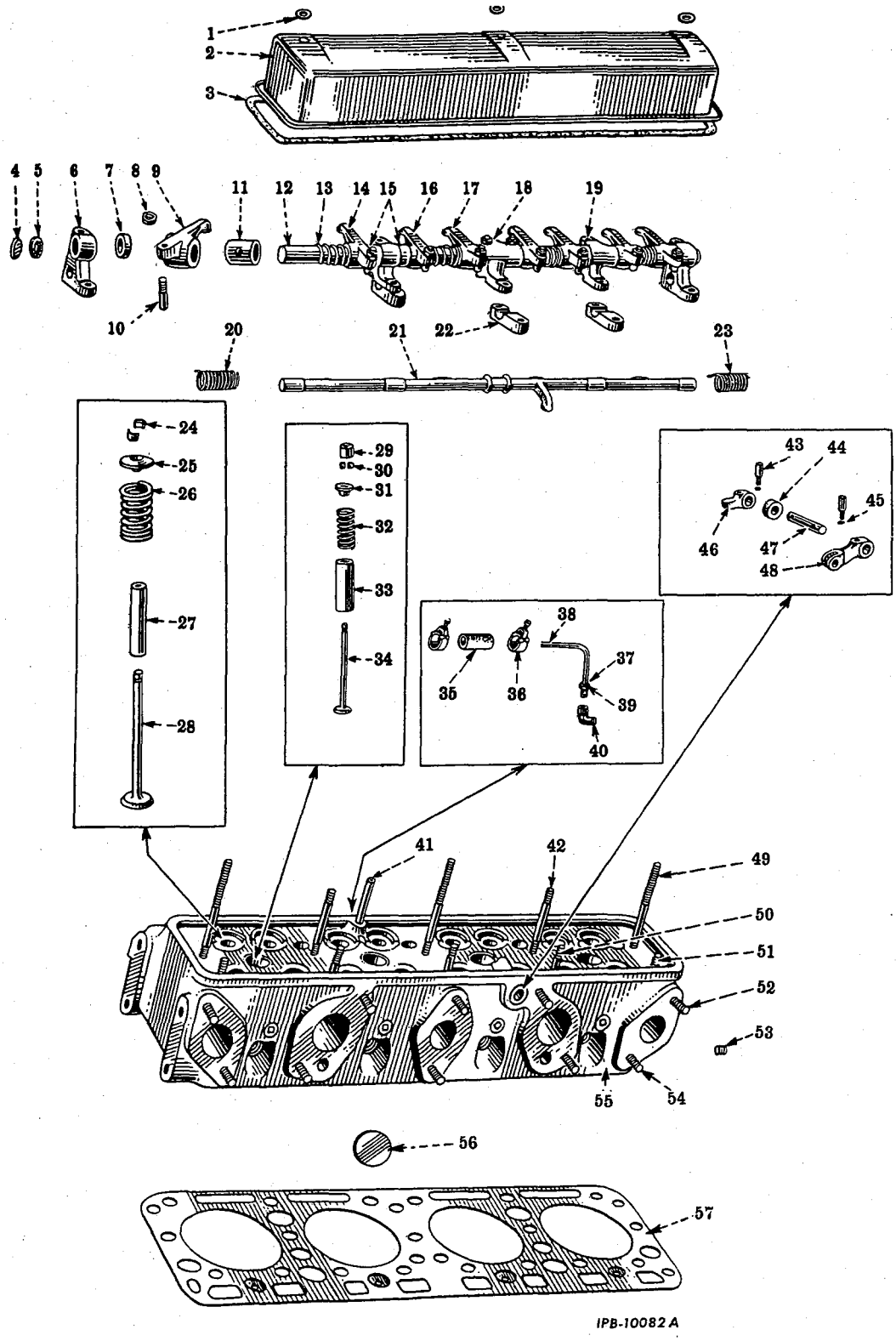

PRINTED IN UNITED STATES OF AMERICA

REF. NO.	PART NUMBER	DESCRIPTION

-22-

DIESEL ENGINE (TD-61)

REF. NO.	PART NUMBER	DESCRIPTION

BASIC SERVICE ENGINE

278 013 R91 Engine, basic service diesel
(Consists of -
Cylinder Head, Valve Cover, Valves and Starting Valve Mechanism.
Crankcase, Front Cover, Camshaft and Related Parts.
Crankshaft and Related Parts, Connecting Rods, Pistons and Cylinder Sleeves
Crankcase Oil Pan and Lubricating Oil Pump.)

CYLINDER HEAD, VALVE COVER, VALVES AND STARTING VALVE MECHANISM — CONTINUED

REF. NO.	PART NUMBER	DESCRIPTION
1	62 866 D	WASHER, valve cover stud nut (3)
2	52 018 DAX	COVER, valve 3/8NF NUT (3)
3	52 019 D	GASKET, valve cover
4	172 530	PLUG, 11/16" valve lever shaft expansion (2)
5	49 950 D	RING, valve lever shaft snap (2)
6	8 202 D	BRACKET, outer valve lever (2) 3/8NF NUT (4) 3/8" lock WASHER (2)
7	52 017 D	SPACER, valve lever (short) (2)
8	133 093 R1	NUT, valve lever adjusting screw (8)
9	46 224 DBX	LEVER w/BUSHING, 46 225 DA, NUT, 133 093 R1 and SCREW, 16 067 DA, RH exhaust valve (2)
10	16 067 DA	SCREW, valve lever adjusting (8)
11	46 225 DA	BUSHING, valve lever (8)
12	52 016 DX	SHAFT w/PLUG, 172 530, valve lever, (2)
13	46 218 D	SPRING, valve lever (4)
14	46 221 DBX	LEVER w/BUSHING, 46 225 DA, NUT, 133 093 R1 and SCREW, 16 067 DA, LH intake valve (2)
15	46 220 D	SPACER, valve lever (long) (4)
16	46 222 DBX	LEVER w/BUSHING, 46 255 DA, NUT, 133 093 R1 and SCREW, 16 067 DA, RH intake valve (2)
17	46 223 DBX	LEVER w/BUSHING, 46 225 DA, NUT, 133 093 R1 and SCREW, 16 067 DA, LH exhaust valve (2)
18	8 201 D	BRACKET, upper half valve lever (center) 5/16 x 3/4" cup-pt-hdls. set SCREW (2) 5/16 jam NUT (2)
19	8 200 D	BRACKET, intermediate valve lever (upper half) (2)
20	51 169 D	SPRING, rear starting valve shaft
21	256 102 R93	SHAFT, starting valve
22	8 199 D	BRACKET, center and intermediate valve lever (lower half) (3)

CYLINDER HEAD, VALVE COVER, VALVES AND STARTING VALVE MECHANISM — CONTINUED

REF. NO.	PART NUMBER	DESCRIPTION
23	51 170 D	SPRING, front starting valve shaft
24	41 339 D	KEY, valve spring seat (16)
25	273 166 R92	ROTOR, positive valve (8)
26	46 205 DA	SPRING, valve (8)
27	8 198 DR	GUIDE, valve (will work for 8 198 D) (8)
28	46 203 DD	VALVE, intake (4)
28	46 204 DD	VALVE, exhaust (4)
29	250 535 R1	COVER, starting valve (4)
30	46 209 D	KEY, starting valve spring seat (8)
31	46 208 D	SEAT, starting valve spring (4)
32	46 211 D	SPRING, starting valve (4)
33	8 744 DR	GUIDE, starting valve (will work for 8 744 D) (4)
34	46 207 DA	VALVE, starting (4)
35	251 226 R1	HOSE, cylinder head breather tube
36	251 227 R91	CLAMP, cylinder head breather tube hose (will work for 274 085 R91) (2)
37	278 953 R91	NUT, pipe coupling (will work for 37 165 D)
38	275 366 R2	TUBE, cylinder head to air cleaner breather (together w/NUT, 278 953 R91, will work for 275 366 R11)
40	57 736 D	ELBOW, cylinder head to air cleaner breather tube
41	52 139 D	PIPE, cylinder head breather
42	52 012 D	STUD, intermediate valve lever bracket (long) (2) 3/8NF NUT (2)
43	42 739 DA	PIN, starting valve operating shaft lever (2) 1/4NF NUT (2)
44	264 530 R91	OIL SEAL, starting valve operating shaft (optional with 271 597 R91)
44	271 597 R91	OIL SEAL, starting valve operating shaft (optional with 264 530 R91)
45		WASHER, starting valve operating shaft lever pin lock (Shakeproof 1114) (2)

REF. NO.	PART NUMBER	DESCRIPTION

CYLINDER HEAD, VALVE COVER, VALVES AND STARTING VALVE MECHANISM — CONTINUED

46	260 938 R1	LEVER, inner starting valve operating shaft
47	51 195 D	SHAFT, operating starting valve
48	52 745 D	LEVER, outer starting valve operating shaft
49	46 198 D	STUD, center and outer valve lever bracket (long) (3)
50	46 200 D	STUD, center and intermediate valve lever bracket (short) (3) 3/8NF NUT (4) 3/8" lock WASHER (2)
51	32 445 D	STUD, outer valve lever bracker (short) (2) 3/8NF NUT (2) 3/8" lock WASHER (2)
52	260 870 R1	STUD, manifold (10) (TD-61M-38 951 to 39699)
52	260 870 R1 260 872 R1	STUD, manifold (9) (TD-61M 39700 up) NUT, manifold stud (10)
53	50 410 DA	PLUG, oil header
54	63 459 D	STUD, manifold (long) (TD-61 39700 up)
55	277 098 R11	HEAD ASSEMBLY, cylinder (will work for 260 869 R52) (Composed of -

8	GUIDE	8 198 DR
4	GUIDE	8 744 DR
§1	HEAD	
§4	JET	
1	PIPE	52 139 D
1	PLUG	50 410 DA
4	PLUG	126 045
6	PLUG	116 566
2	STUD	32 445 D
3	STUD	46 198 D
3	STUD	46 200 D
2	STUD	52 012 D
9	STUD	260 870 R1
1	STUD	63 459 D)

56	256 659 R1	PLUG, 1" cylinder head expansion (optional with 172 545) (2)
56	172 545	PLUG, 1" cylinder head expansion (optional with 256 659 R1) (2)
57	53 436 DE	GASKET, cylinder head
	275 818 R11	BRACKET, upper air cleaner (See NOTE) WASHER, steel, 17/32" x 1-1/16" x No. 13 ga. (2)
	275 822 R91	BRACKET, lower air cleaner (See NOTE) 3/8NF NUT (2) 3/8" lock WASHER (2)
	261 339 R92	PACKAGE, cylinder head replacement (Consists of -

1	GASKET	45 984 D
1	GASKET	45 986 D
1	GASKET	52 019 D
3	GASKET	52 649 D
2	GASKET	52 650 DC
1	GASKET	53 436 DE
3	WASHER	62 866 D)

	260 871 R1	STUD, nozzle body retainer (8)

NOTE - Illustrated with "Air Cleaner and Connections"

§ - Not Furnished Separately

-23-

DIESEL ENGINE (TD-61)

PRINTED IN UNITED STATES OF AMERICA

CRANKCASE, FRONT COVER, FRONT AND REAR ENGINE SUPPORTS, CAMSHAFT AND RELATED PARTS

-24-

DIESEL ENGINE (TD-61)

CRANKCASE, FRONT COVER, FRONT AND REAR ENGINE SUPPORTS, CAMSHAFT AND RELATED PARTS — CONTINUED

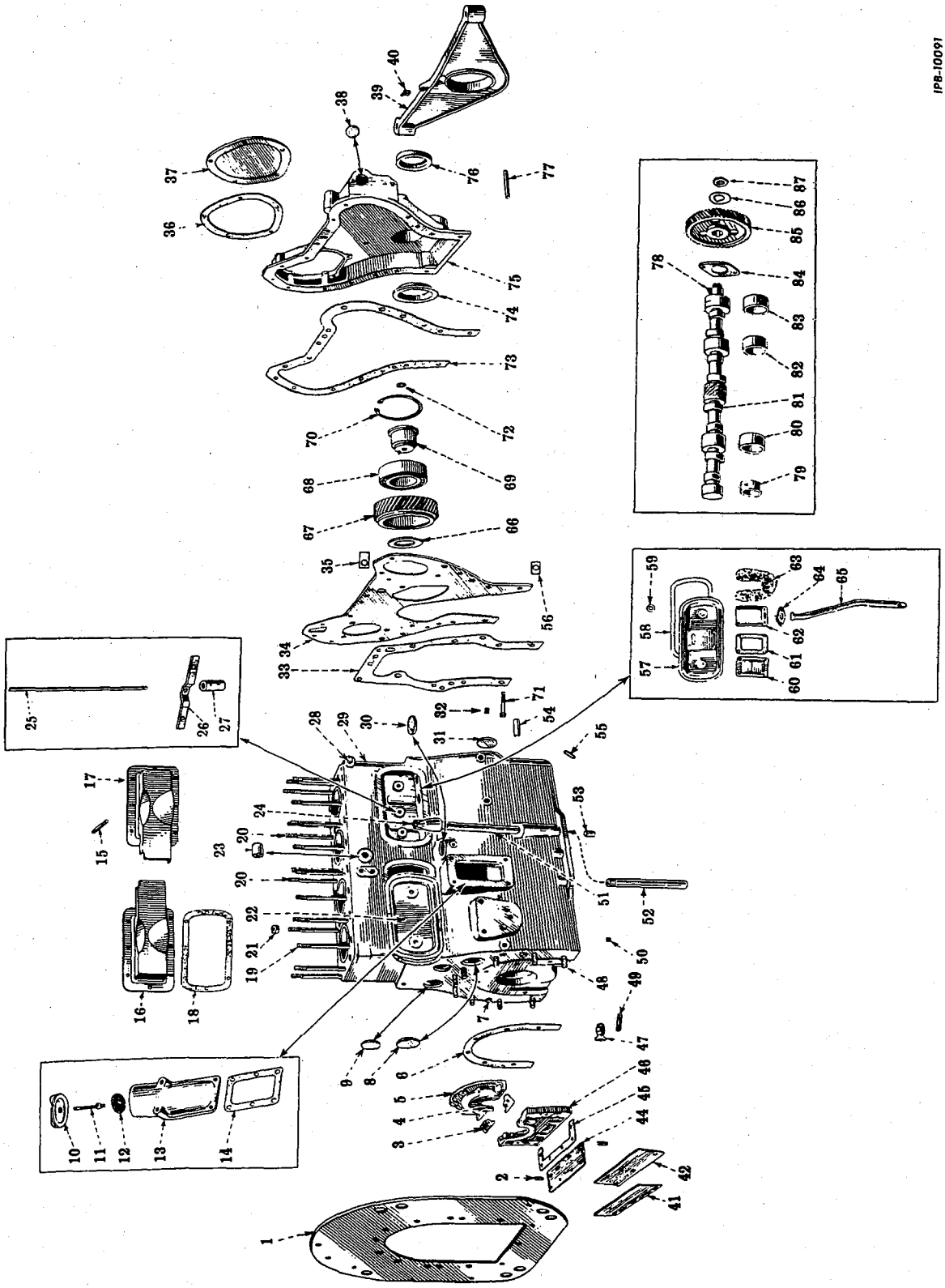

PRINTED IN UNITED STATES OF AMERICA

REF. NO.	PART NUMBER	DESCRIPTION

CRANKCASE, FRONT COVER, FRONT AND REAR ENGINE SUPPORTS, CAMSHAFT AND RELATED PARTS — CONTINUED

1	52 163 DB	SUPPORT, rear engine 1/2 x 1" hex-hd. cap SCREW (5) 3/8 x 1" hex-hd. cap SCREW (3) 1/2NF NUT (9) 1/2" lock WASHER (9) 3/8" lock WASHER (3)
2	268 770 R2	PLUG, crankcase oil seal retainer (2)
3	271 702 R1	GASKET, crankshaft rear oil seal retainer (between halves) (2)
4	271 794 R91	OIL SEAL, rear crankshaft (2)
5	271 792 R1	RETAINER, upper crankshaft rear oil seal 3/8 x 1-3/8" hex-hd. cap SCREW (4) 3/8 x 3-1/4" hex-hd. cap SCREW (2) 3/8" lock WASHER (6)
6	46 240 DB	GASKET, crankshaft rear oil seal retainer
7	25 086 DA	DOWEL, rear engine support (2)
8	172 593	PLUG, 2-1/8" crankcase rear camshaft bearing
9	256 658 R1	PLUG, 1-3/4" bronze expansion (crankcase rear expansion plug) (2)
10	4 819 D	CAP, oil filler
11	28 797 D	STUD, oil filler cap 3/8 NUT
12	50 411 D	SCREEN, oil filler
13	8 355 D	BODY, oil filler 3/8 x 1" hex-hd. cap SCREW (2) 3/8 x 2-1/2" hex-hd. cap SCREW (2) 3/8" lock WASHER (4)
14	42 733 DB	GASKET, oil filler body
15	272 799 R1	STUD, front water header cover
16	272 801 R91	HEADER w/COVER, rear crankcase water 5/16 x 3/4" hex-hd. cap SCREW (8) 5/16" lock WASHER (8)
17	272 800 R91	HEADER w/COVER, front crankcase water 5/16NF NUT 5/16 x 3/4" hex-hd. cap SCREW (7) 5/16" lock WASHER (8)
18	51 316 DB	GASKET, crankcase water header (2)
19	46 242 DA	STUD, cylinder head (short) (16)
20	275 815 R1	STUD, cylinder head (long) (2)
21	46 227 D	NUT, cylinder head stud (18)
22	51 324 D	PLATE, rear push rod chamber side 3/8 x 1-1/8" hex-hd. cap SCREW (2)
23	50 827 DA	BUSHING, cross shaft (2)
24	272 510 R11	GAGE w/wing NUT, oil level
25	48 236 DXA	ROD, push (optional with 261 119 R91) (8)
25	261 119 R91	ROD, push (optional with 48 236 DXA) (8)
26	51 790 D	STOP, valve tappet (2) 3/8 x 5/8" hex-hd. cap SCREW (2) 3/8" lock WASHER (2)
27	45 956 D	TAPPET, valve (8)
28	50 826 D	PIN, cross shaft return spring

-25-

DIESEL ENGINE (TD-61)

REF. NO.	PART NUMBER	DESCRIPTION

CRANKCASE, FRONT COVER, FRONT AND REAR ENGINE SUPPORTS, CAMSHAFT AND RELATED PARTS — CONTINUED

29	272 503 R21	CRANKCASE ASSEMBLY (Composed of - 1 BEARING 53 424 DA 1 BEARING 51 972 DAR 1 BEARING 51 973 DAR 1 BEARING 51 974 DAR 2 BUSHING 50 827 DA §1 CAP §4 CAP 2 CORK 104 942 §1 CRANKCASE 2 DOWEL 25 086 DA 2 DOWEL 52 605 D 2 DOWEL 250 914 R1 5 LOCKWIRE 278 027 R1 1 PIN 50 826 D 4 PLUG 50 410 DA 2 PLUG 103 865 1 PLUG 126 045 1 PLUG 172 580 1 PLUG 172 593 4 PLUG 256 658 R1 1 PLUG 264 475 R1 2 PLUG 268 996 R1 8 SCREW 275 688 R1 2 SCREW 275 816 R1 1 SLEEVE 266 600 R1 16 STUD 46 242 DA 9 STUD 51 971 D 2 STUD 263 681 R1 1 STUD 272 799 R1 2 STUD 275 815 R1 2 WASHER 39 422 D 8 WASHER 46 246 D)
	103 865	PLUG, 1/8" sq-hd. C.I. pipe (2)
	126 045	PLUG, 3/8" csk-hdls. pipe
	268 996 R1	PLUG, 3/8" rear oil galley pipe (solder dipped) (2)
29	272 505 R92	CRANKCASE w/PISTONS and SLEEVES ASSEMBLY TD-61-M 501 to 1404 (Composed of - 1 CRANKCASE 272 503 R21 4 PIN 254 955 R2 4 PISTON 264 320 R2 8 RING 45 739 D 8 RING 264 323 R3 4 RING 264 324 R2 4 RING 264 325 R3 4 RING 264 326 R2 §4 SLEEVE)
30	172 580	PLUG, 1-7/8" crankcase distributor hole expansion
31	256 658 R1	PLUG, 1-3/4" (crankcase front expansion plug) (2)
32	264 475 R1	PLUG, idler gear metering
33	261 218 R3	GASKET, crankcase front plate
34	261 221 R31	PLATE w/LOCK, 46 250 D and NUT, 264 723 R1, front crankcase
	264 723 R1	NUT, spline 3/8 x 7/8" hex-hd. cap SCREW (4)
35	46 250 D	LOCK, crankcase front plate cap screw 3/16 x 1/4" rd-hd. RIVET
36	46 254 DA	GASKET, fuel pump gear cover
37	46 253 D	COVER, fuel pump gear 5/16 x 1/2" hex-hd. cap SCREW (5) 5/16" lock WASHER (5)
38	172 558	PLUG, 1-1/4" front cover hour meter pad
39	275 800 R1	SUPPORT, front engine 1/2NF NUT (2) 1/2 x 3-1/4" hex-hd. cap SCREW (2) 1/2" lock WASHER (7)

§ - Not Furnished Separately

PRINTED IN UNITED STATES OF AMERICA

REF. NO.	PART NUMBER	DESCRIPTION
		CRANKCASE, FRONT COVER, FRONT AND REAR ENGINE SUPPORTS, CAMSHAFT AND RELATED PARTS — Continued
40	271 409	FITTING, 1/8" lubrication, front engine support, straight (optional with 138 322 H)
40	138 322 H	FITTING, 1/8" lubrication, front engine support, straight (optional with 271 409)
41	46 137 D	GASKET, crankcase rear dust seal
42	46 136 D	SEAL, crankcase rear dust 3/8NF x 5/8" hex-hd. cap SCREW (3) 3/8" lock WASHER (3)
44	51 979 DAXA	PLATE, crankcase oil seal retainer 3/8 x 1" hex-hd. cap SCREW (4) 3/8" lock WASHER (4)
45	51 980 D	GASKET, crankcase oil seal retainer plate
46	271 793 R1	RETAINER, lower crankshaft rear oil seal 3/8 x 1-3/8" hex-hd. cap SCREW (2) 3/8" lock WASHER (2)
47	31 729 D	COCK, crankcase water drain
48	51 971 D	STUD, rear engine support (9)
49	263 681 R1	STUD, water trap bracket (2)
50	50 410 DA	PLUG, oil header (4)
51	266 600 R1	SLEEVE, oil level gage
52	52 069 D	PIPE, oil level gauge
53	104 942	CORK, 9/16 x 3/4 x 15/16" No. 6 standard, No. 2x grade (crankcase locating hole plug) (2)
54	52 605 D	DOWEL, crankcase front cover (2) TD-61-M 1597 up
55	250 914 R1	DOWEL, crankshaft center bearing (2)
56	354 489 R1	LOCK, crankcase front plate screw (4)
57	59 488 D	PLATE, front push rod chamber side 3/8 x 1-1/8" hex-hd. cap SCREW (2)
58	60 570 D	GASKET, push rod chamber side plate (2)
59	62 866 D	WASHER, push rod chamber side plate bolt (4)
60	59 480 DA	BAFFLE, breather
61	59 481 DB	GASKET, breather body
62	8 959 DB	BODY, breather (order 265 926 R91)
62	9 258 DC	BODY, breather (optional with 265 926 R91) 10 x 1/2" rd-hd. mach. SCREW (4) 5/16 x 7/8" hex-hd. cap SCREW (2) No. 10 lock WASHER (4) 5/16" lock WASHER (2)
62	9 258 DCX	BODY, 9 258 DC, breather (will work for 8 959 DB)
62	265 926 R91	BODY, breather (will work for 8 959 DB) (optional with 9 258 DC) No. 10 x 5/8" hex-hd. tapping SCREW (4) 5/16 x 1" hex-hd. tapping SCREW (2)
63	59 482 D	ELEMENT, breather
64	59 484 D	FLANGE, breather pipe 5/16 x 1" hex-hd. self-tapping SCREW (2)
65	59 490 D	PIPE, breather
66	264 662 R2	SPACER, idler gear shaft
67	264 664 R1	GEAR, idler
68	264 663 R91	BEARING, idler gear tapered roller (optional with 266 635 R91)
68	266 635 R91	BEARING, idler gear tapered roller (optional with 264 663 R91)

-26-

DIESEL ENGINE (TD-61)

REF. NO.	PART NUMBER	DESCRIPTION
		CRANKCASE, FRONT COVER, FRONT AND REAR ENGINE SUPPORTS, CAMSHAFT AND RELATED PARTS — Continued
69	264 661 R31 18 400 R1	SHAFT w/PIN, 18 400 R1, idler gear PIN, 3/16 x 5/8" roll (Esna)
70	252 862 R1	RING, idler gear snap
71	256 820 R1	BOLT, idler gear shaft 1/2NF slt. NUT 1/8 x 1" cotter PIN
72	263 561 R2	WASHER, idler gear shaft bolt
73	261 219 R2	GASKET, front cover
74	264 363 R1	DEFLECTOR, front crankshaft oil
75	261 215 R12	COVER w/DEFLECTOR, 264 363 R1, POINTER, 260 119 R1, PLUG, 172 558 and OIL SEAL, 258 511 R91, front crankcase 3/8 x 1" hex-hd. cap SCREW (4) 3/8 x 1-3/8" hex-hd. cap SCREW (9) 3/8" lock WASHER (13)
76	264 534 R91	OIL SEAL, front crankshaft (optional with 258 511 R91)
76	258 511 R91	OIL SEAL, front crankshaft (optional with 264 534 R91)
77	260 119 R1	POINTER, timing
78	112 139	KEY, 1/4 x 7/8" Woodruff
79	53 424 DA	BEARING, rear camshaft (will work for 46 120 DA)
80	51 974 DAR	BEARING, camshaft No. 3
91	52 009 DA	CAMSHAFT
82	51 973 DAR	BEARING, camshaft No. 2
83	51 972 DAR	BEARING, front camshaft
84	50 948 DA	PLATE, thrust camshaft 3/8 x 7/8" hex-hd. cap SCREW (2) 3/8" lock WASHER (2)
85	8 310 DA	GEAR, camshaft
86	16 025 D	LOCK, camshaft gear nut
87	261 285 R1	NUT, camshaft gear
	256 859 R1	CAP, front, rear and intermediate crankshaft (See NOTE) (4)
	256 860 R2	CAP, center crankshaft bearing (See NOTE)
	275 688 R1	SCREW, front, rear and intermediate crankshaft bearing cap (8)
	275 816 R1	SCREW, center crankshaft bearing cap (2)
	48 384 D	SHIM, engine front support (heavy) (X)
	48 385 D	SHIM, engine front support (light) (X)
	39 422 D	WASHER, center crankshaft bearing cap, cap screw (2)
	46 246 D	WASHER, front, rear and intermediate crankshaft bearing cap, cap screw (8)
		WASHER, 11/32 x 11/16 x 1/16" (fuel pump gear cover) (5)
		WIRE, locking (16GA x 14" long, crankshaft bearing cap screw (order 278 027 R1) (5)
	278 027 R1	WIRE, locking bulk (16GA) (customer must specify length required) (X)

NOTE - Place an emergency order through regular service parts channels. Orders should be marked "Machine Facilities are Available."

X - As Required

REF. NO.	PART NUMBER	DESCRIPTION

CONNECTING RODS AND SLEEVE SETS

-27-

DIESEL ENGINE (TD-61)

REF. NO.	PART NUMBER	DESCRIPTION

CONNECTING RODS AND SLEEVE SETS – CONTINUED

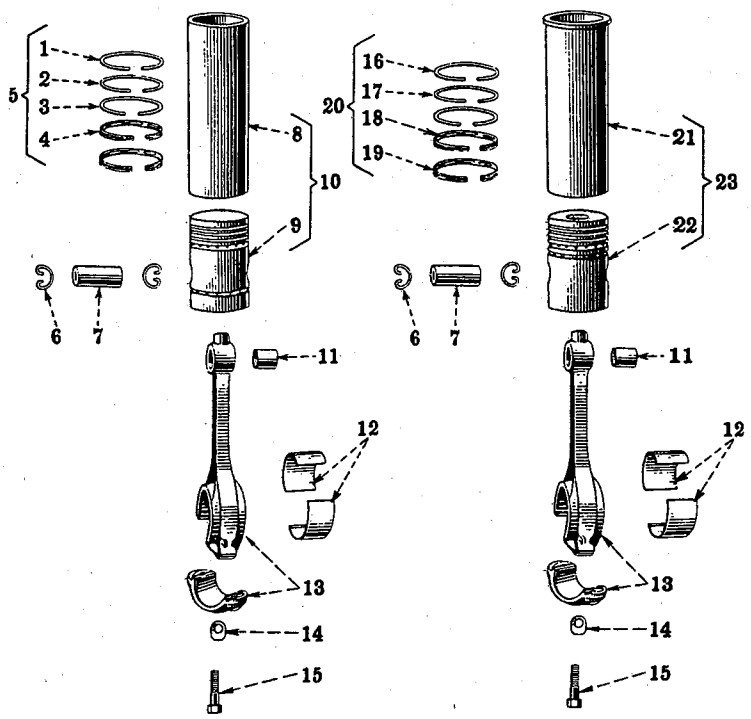

D-264 Engine

D-281 Engine

IPA-47330

⊗ KEY TO UNITS
A - Service Parts for D-264 Engines 4 x 5-1/4 TD-61-M - 501 to 1403
B - Service Parts for D-281 Engines 4-1/8 x 5-1/4 TD-61-M - 1404 up

⊗ Letters of these units correspond with those shown following the description of the parts in the list below and identifies the unit for which the part is used. Items without letters after the description indicates the part is used for all units.

1	264 326 R3	RING, compression piston (top or first groove) (4 for Unit A)
2	264 325 R2	RING, compression piston (second groove) (4 for Unit A)
3	264 324 R2	RING, compression piston (third groove) (4 for Unit A)
4	264 323 R2	RING, oil regulating piston (fourth and fifth groove) (8 for Unit A)
5	264 414 R92	RING SET, piston (consists of twelve compression rings and eight oil regulating rings) (Unit A)
6	45 739 D	RING, piston pin retainer
7	254 955 R2	PIN, piston (standard) (optional with 264 041 R1)
7	264 041 R1	PIN, piston (standard) (optional with 254 955 R2)
7	254 956 R2	PIN, piston (.005" oversize) (optional with 264 042 R1)
7	264 042 R1	PIN, piston (.005" oversize) (optional with 254 956 R2)
8	264 322 R1	SLEEVE, cylinder (4 for Unit A)
9	264 320 R2	PISTON (4 for Unit A)
10	264 338 R94	SLEEVE w/PISTON ASSEMBLY, cylinder (4 for Unit A) (Composed of -

1	PIN	254 955 R2
1	PISTON	264 320 R2
2	RING	45 739 D
1	RING	264 326 R3
1	RING	264 325 R2
1	RING	264 324 R2
2	RING	264 323 R2
1	SLEEVE	264 322 R1)

10	264 339 R94	SLEEVE SET (consists of four sleeves, w/PISTONS and RINGS, 264 338 R94) (Unit A)
11	45 748 DAR	BUSHING, piston pin
12	52 164 DAX	BEARING, connecting rod (2 halves) (standard
12	263 201 R11	BEARING, connecting rod (2 halves) (.002" undersize)
12	52 165 DAX	BEARING, connecting rod (2 halves) (.030" undersize)
12	263 207 R11	BEARING, connecting rod (2 halves) (.032" undersize)
13	253 213 R11	ROD ASSEMBLY, connecting (Composed of -

2	BOLT	253 215 R1
1	BUSHING	45 748 DAR
§1	CAP	
2	LOCK	253 216 R1
§1	ROD	)

§ - Not Furnished Separately

PRINTED IN UNITED STATES OF AMERICA

REF. NO.	PART NUMBER	DESCRIPTION
		CONNECTING RODS AND SLEEVE SETS — Continued
14	253 216 R1	LOCK, connecting rod bolt
15	253 215 R1	BOLT, connecting rod
16	277 072 R1	RING, compression piston (top or first groove) (4 for Unit B)
17	277 073 R1	RING, compression piston (second and third groove) (8 for Unit B)
18	277 074 R1	RING, oil regulating piston (fourth groove) (4 for Unit B)
19	277 075 R1	RING, oil regulating piston (fifth groove) (4 for Unit B)
20	277 079 R91	RING SET, piston (consists of twelve compression rings and eight oil regulating rings) (Unit B)

CRANKSHAFT AND RELATED PARTS, DRIVE PULLEY AND FLYWHEEL

-28-

DIESEL ENGINE (TD-61)

REF. NO.	PART NUMBER	DESCRIPTION
		CONNECTING RODS AND SLEEVE SETS — Continued
21	277 076 R1	SLEEVE, cylinder (4 for Unit B)
22	277 071 R1	PISTON (4 for Unit B)
23	277 077 R91	SLEEVE w/PISTON ASSEMBLY, cylinder (4 for Unit B) (Composed of - 1 PIN 254 955 R2; 1 PISTON 277 071 R1; 2 RING 45 739 D; 1 RING 277 072 R1; 2 RING 277 073 R1; 1 RING 277 074 R1; 1 RING 277 075 R1; 1 SLEEVE 277 076 R1)
23	277 078 R91	SLEEVE SET (consists of four sleeves, w/PISTONS and RINGS, 277 077 R91) (Unit B)

CRANKSHAFT AND RELATED PARTS, DRIVE PULLEY AND FLYWHEEL — Continued

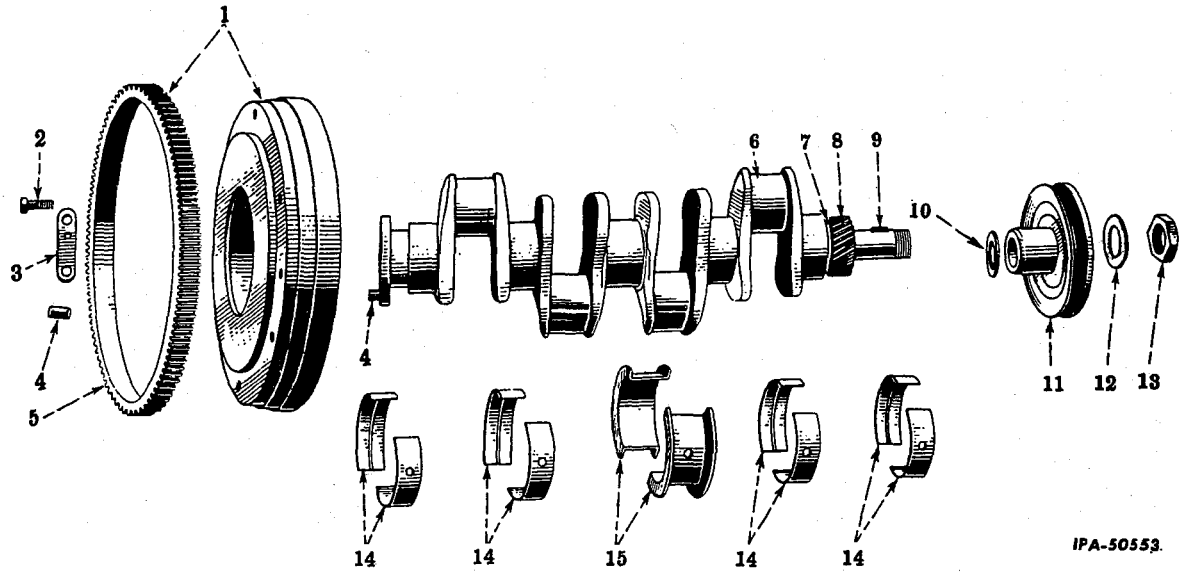

1	6 275 DXC	FLYWHEEL w/ring GEAR, 47 874 DD
2	43 832 D	BOLT, flywheel (4)
3	45 613 D	LOCK, flywheel bolt (2)
4	46 923 D	PIN, flywheel dowel (2)
5	47 874 DD	GEAR, flywheel ring
6	261 265 R41	CRANKSHAFT w/two PIN, 46 923 D (standard)
6	261 267 R95	CRANKSHAFT (.030" undersize), w/BEARING, 254 260 R95 and two PIN, 46 923 D
7	117 977	KEY, 5/16 x 1" (Woodruff "B")
8	261 217 R1	GEAR, crankshaft (27 T)
9	124 554	KEY, 5/16 x 1" ni-pltd-stl. (Woodruff "B") (fan drive pulley) (2)
10	264 362 R1	FLINGER, crankshaft oil
11	6 652 DB	PULLEY, fan drive (not used with front power take-off coupling attachment)
12	4 254 DA	LOCK, crankshaft gear nut (not used with front power take-off coupling attachment)
13	4 253 D	NUT, crankshaft gear (not used with starting crank attachment)
14	259 960 R91	BEARING, front, rear and intermediate crankshaft (2 halves) (standard) (4)
14	259 963 R91	BEARING, front, rear and intermediate crankshaft (2 halves) (.030" undersize) (4)
14	263 205 R91	BEARING, front, rear and intermediate crankshaft (2 halves) (.002" undersize) (4)
14	263 211 R91	BEARING, front, rear and intermediate crankshaft (2 halves) (.032" undersize) (4)

PRINTED IN UNITED STATES OF AMERICA

REF. NO.	PART NUMBER	DESCRIPTION

CRANKSHAFT AND RELATED PARTS, DRIVE PULLEY AND FLYWHEEL — CONTINUED

15	271 207 R92	BEARING, center crankshaft (2 halves) (standard)
15	271 213 R92	BEARING, center crankshaft (2 halves) (.030" undersize)
15	271 219 R92	BEARING, center crankshaft (2 halves) (.002" undersize)
15	271 222 R92	BEARING, center crankshaft (2 halves) (.032" undersize)

EXHAUST SYSTEM

INTAKE MANIFOLD AND EXHAUST MANIFOLD

-29-

DIESEL ENGINE (TD-61)

REF. NO.	PART NUMBER	DESCRIPTION

CRANKSHAFT AND RELATED PARTS, DRIVE PULLEY AND FLYWHEEL — CONTINUED

	254 260 R95	BEARING SET, crankshaft (.030" undersize) (Consists of - 4 BEARING 52 165 DAX; 4 BEARING 259 963 R91; 1 BEARING 271 213 R92)
	104 941	CORK, 1/2 x 11/16 x 7/8" long No. 5 standar (X)
	104 942	CORK, 9/16 x 3/4 x 15/16" long No. 6 standard, No. 2 grade (X)

X - As Required

EXHAUST SYSTEM

INTAKE MANIFOLD AND EXHAUST MANIFOLD - Continued

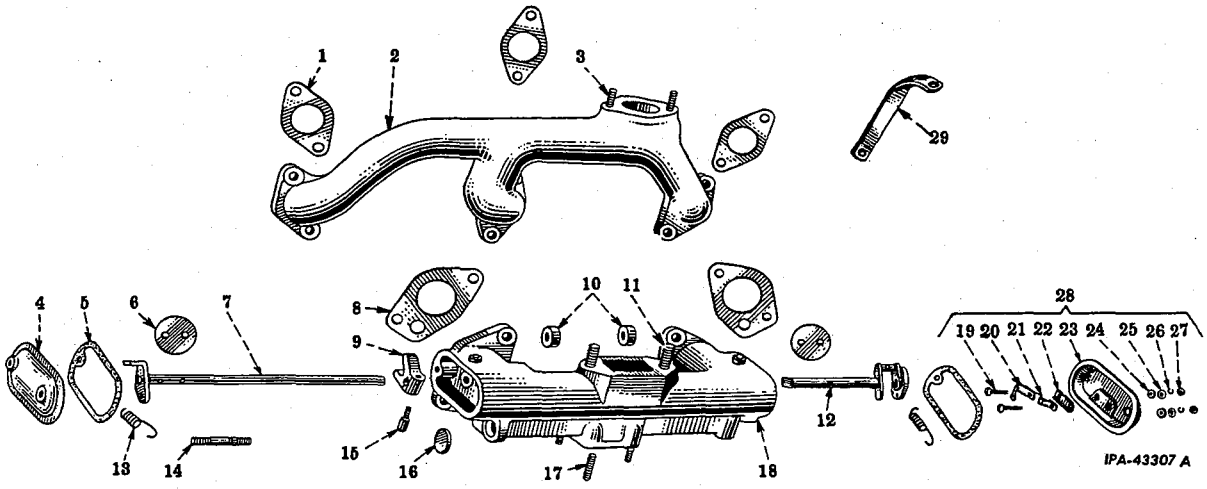

1	52 649 D	GASKET, exhaust manifold (3)
2	8 277 DX	MANIFOLD w/two STUD, 46 202 D and PLUG, 37 219 D, exhaust
3	46 202 D	STUD, exhaust-pipe flange (2)
4	263 312 R1	COVER, rear intake manifold end 5/16NF NUT 1/4 x 1-3/8" hex-hd. cap SCREW 1/4 x 1/2" x 18 ga. WASHER
	54 909 H	WASHER
5	52 520 DB	GASKET, intake manifold end cover (2)
6	52 653 D	VALVE, intake manifold butterfly (2) No. 8 x 7/16" rd-hd-slt. mach. SCREW w/external tooth lock WASHER (4)
7	52 836 DX	SHAFT w/LEVER, rear intake manifold control
8	52 650 DC	GASKET, intake manifold (2)
9	52 654 D	LEVER, intake manifold control (optional with 263 030 R91)
9	263 030 R91	LEVER, intake manifold control (optional with 52 654 D)
10	53 083 D	SEAL, intake manifold control shaft (2)
11	G 1 245	STUD, air cleaner pipe (will work for G 1 988) (2)
12	263 324 R93	SHAFT and CONTACT w/EYELETS, front manifold
13	56 107 D	SPRING, intake manifold control (2)
14	263 318 R1	STUD, intake manifold control spring (2)
15	42 739 DA	PIN, intake manifold control lever 1/4NF NUT 1/4" external-tooth lock WASHER
16	172 545	PLUG, intake manifold expansion (2)
17	50 705 D	STUD, carburetor (4)
18	263 309 R13	MANIFOLD ASSEMBLY, intake (Composed of - 1 LEVER 52 654 D; §1 MANIFOLD; 1 PIN 42 739 DA; 2 PLUG 172 545; 2 SEAL 53 083 D; 1 SHAFT 52 836 DX; 1 SHAFT 263 324 R93; 2 SPRING 56 107 D; 2 STUD G 1 245; 4 STUD 50 705 D; 2 STUD 263 318 R1; 2 VALVE 52 653 D) 5/16 x 1" hdls. oval-pt. set SCREW (2) 5/16" NUT (2)

§ - Not Furnished Separately

PRINTED IN UNITED STATES OF AMERICA

REF. NO.	PART NUMBER	DESCRIPTION

EXHAUST SYSTEM

INTAKE MANIFOLD AND EXHAUST MANIFOLD - Continued

19	263 330 R1	SCREW, No. 10NF x 1" pan-hd. (one required when used with magneto ignition) (2)
19		SCREW, No. 10NF x 5/8" pan-hd. (used with magneto ignition only)
20	263 327 R1	BLADE, switch contact
21	263 328 R1	BLADE, switch contact (used with battery ignition only)
21	263 358 R1	BLADE, magneto grounding (used with magneto ignition only)
22	263 325 R2	STRIP, switch blade mounting
23	263 311 R1	COVER, front intake manifold end (order 263 311 R12 or 263 345 R92)
24	263 326 R1	INSULATOR, terminal (one required when used with magneto ignition) (2)
24	263 357 R1	SLEEVE, magneto grounding (used with magneto ignition only)
25	263 329 R1	WASHER, 13/64 x 1/2" x No. 16 ga. cd-pltd. (one required when used with magneto ignition) (2)
26		WASHER, No. 10 external-tooth cd-pltd. lock (2)
27		NUT, No. 10NF cd-pltd.
28	263 311 R12	COVER ASSEMBLY, front end intake manifold (for tractors equipped with battery ignition) (Composed of - 1 BLADE 263 327 R1; 1 BLADE 263 328 R1; §1 COVER; 2 INSULATOR 263 326 R1; 2 SCREW 263 330 R1; 1 STRIP 263 325 R2; 2 WASHER 263 329 R1) 1/4 x 1-3/8" hex-hd. cap SCREW; 5/16NF NUT; 21/64 x 5/8" x No. 18 ga. copper WASHER; 1/4 x 1/2" x No. 18 ga. cap WASHER
28	263 345 R92	COVER ASSEMBLY, intake manifold front end (for tractors equipped with magneto ignition) (Composed of - 1 BLADE 263 327 R1; 1 BLADE 263 358 R1; §1 COVER; 1 INSULATOR 263 326 R1; 1 SCREW 263 330 R1; 1 SLEEVE 263 357 R1; 1 STRIP 263 325 R1; 1 WASHER 263 329 R1) 5/16NF NUT; No. 10 NF cd-pltd. NUT; 1/4 x 1-3/8" hex-hd. cap SCREW; 1/4" lock WASHER; 5/16" lock WASHER; No. 10 cd-pltd. external-tooth lock WASHER
29	277 480 R1	BRACE, muffler; 15/32 x 59/64 x .065 ga. WASHER (2)
	265 913 R91	DISC, contact
	188 523	EYELET, 1/8 x 1/4" plain brs. (used on intake manifold control shaft) (2)
	188 667	EYELET, 1/4 x 7/32" plain brs. (used on intake manifold control shaft)
	260 872 R1	NUT, exhaust manifold stud (6)
	260 872 R1	NUT, intake manifold stud (4)
	37 219 D	PLUG, drain hole

-30-

DIESEL ENGINE (TD-61)

REF. NO.	PART NUMBER	DESCRIPTION

EXHAUST SYSTEM

EXHAUST MUFFLER AND PIPE EXTENSION

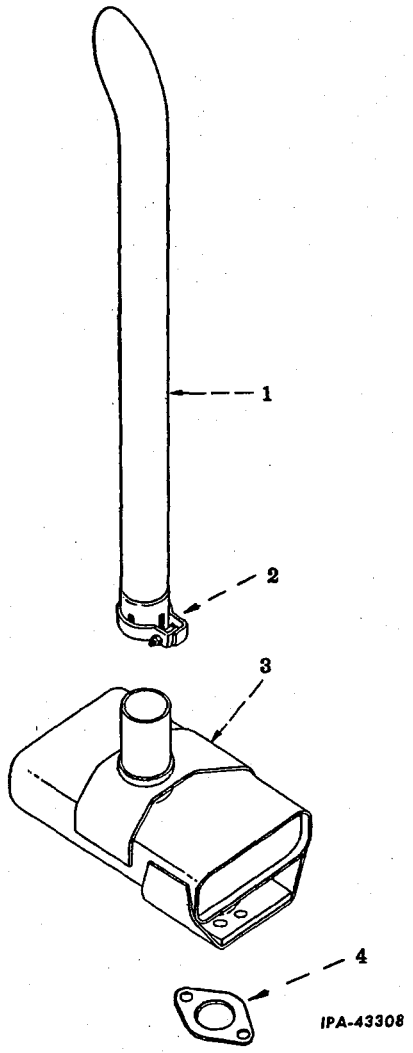

1	276 224 R1	EXTENSION, exhaust muffler pipe (together with clamp, 276 222 R91 will work for 275 284 R91)
2	276 222 R91	CLAMP, exhaust muffler pipe extension
3	275 283 R92	MUFFLER, exhaust; 7/16" NUT (2); 5/16" NUT (for attaching muffler to muffler brace); 5/16 x 5/8" hex-hd. cap SCREW (for attaching muffler to muffler brace)
4	55 799 D	GASKET, exhaust muffler flange

§ - Not Furnished Separately

REF. NO.	PART NUMBER	DESCRIPTION

STARTING MECHANISM

-31-

DIESEL ENGINE (TD-61)

REF. NO.	PART NUMBER	DESCRIPTION

STARTING MECHANISM — CONTINUED

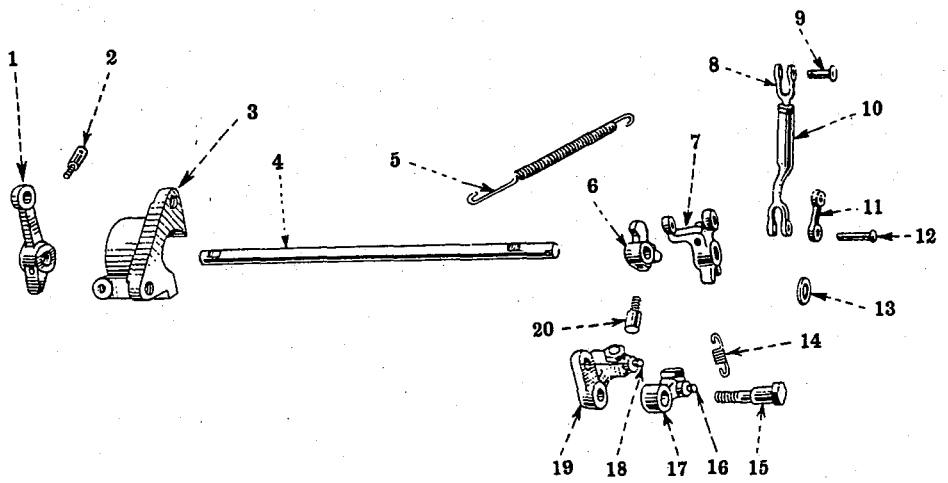

IPA-43305

1	275 821 R1	LEVER, cross shaft operating
2	20 586 D	PIN, cross shaft operating lever 5/16NF NUT 5/16" lock WASHER
3	275 702 R1	BRACKET, cross shaft control 5/16" jam NUT 3/8 x 1-1/4" hex-hd. cap SCREW (2) 5/16 x 1-1/4" hdls. slt-oval-pt. set SCREW 3/8" lock WASHER (2)
4	275 820 R1	SHAFT, cross control
5	52 176 DC	SPRING, control shaft return
6	52 626 DA	LEVER, cross shaft jaw (optional with 262 607 R2)
6	262 607 R2	LEVER, cross shaft jaw (optional with 52 626 DA)
7	52 625 D	JAW, cross shaft 5/16" jam NUT 1/8 x 1" cotter PIN 5/16 x 1-1/4" hdls. fl-pt. set SCREW
8	56 104 D	YOKE, starting valve cross shaft operating rod adjusting (optional with 56 391 DX and 262 561 R11)
8	56 391 DX	YOKE, starting valve cross shaft operating rod adjusting (optional with 56 104 D and 262 561 R11)
8	262 561 R11	YOKE, starting valve cross shaft operating rod adjusting (optional with 56 104 and 56 391 DX) 5/16NF NUT
9	103 495	PIN, starting valve cross shaft operating rod yoke 3/32 x 5/8" cotter PIN
10	258 345 R92	ROD, starting valve cross shaft operating (optional with 262 563 R92)
10	262 563 R92	ROD, starting valve cross shaft operating (optional with 258 345 R92)
11	52 748 D	LINK, carburetor control 1/16 x 5/8" cotter PIN
12	51 068 D	PIN, starting valve cross shaft operating rod yoke 3/32 x 5/8" cotter PIN
13	Q 1 537	WASHER, 21/32 x 1" x No. 12 ga.
14	52 624 D	SPRING, cross shaft latch
15	52 622 D	PIN, cross shaft latch
16	52 623 D	PIN, cross shaft latch spring
17	52 621 DX	LATCH w/PIN, 52 623 D, cross shaft
18	52 623 D	PIN, cross shaft latch bracket
19	8 372 DAX	BRACKET w/PIN, 52 623 D, cross shaft latch 3/8 jam NUT 3/8 x 1" hex-hd. cap SCREW 3/8 x 1-1/2" dog-pt. set SCREW 3/8" lock WASHER
20	20 586 D	PIN, cross shaft jaw lever 5/16NF NUT 5/16" lock WASHER

PRINTED IN UNITED STATES OF AMERICA

CYLINDER HEAD, VALVE COVER, VALVES AND STARTING VALVE MECHANISM

-32-
DIESEL ENGINE (TD-91)

CYLINDER HEAD, VALVE COVER, VALVES AND STARTING VALVE MECHANISM — CONTINUED

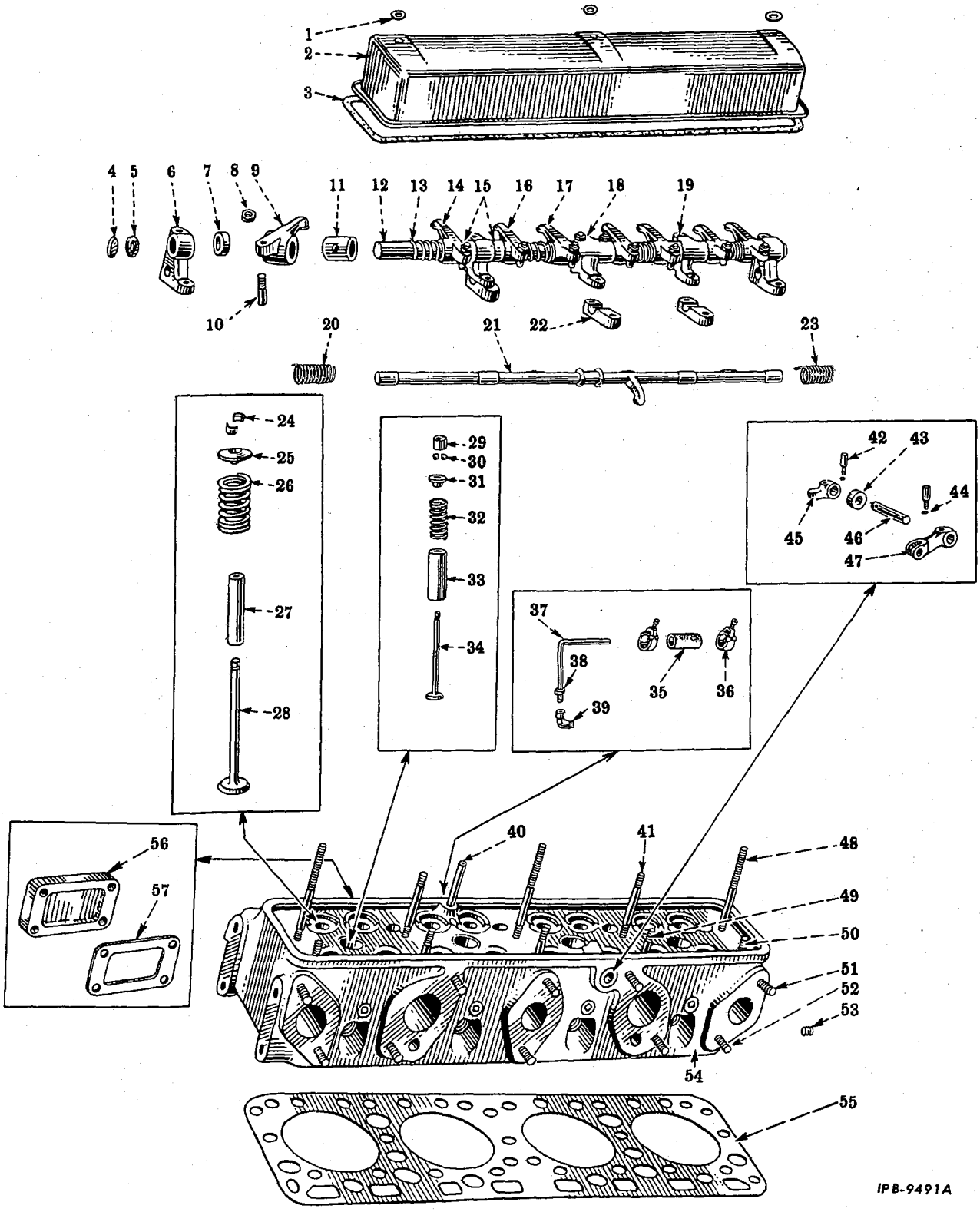

PRINTED IN UNITED STATES OF AMERICA

REF. NO.	PART NUMBER	DESCRIPTION

BASIC SERVICE ENGINE

278 168 R91 ENGINE, basic service diesel
(Consists of -
Cylinder Head, Valves, Valve Cover and Starting Valve Mechanism
Crankcase, Front Cover, Camshaft, and Related Parts
Crankshaft and Related Parts, Connecting Rods, Pistons and Sleeves
Crankcase Oil Pan and Lubricating Oil Pump Engine Balancer)

CYLINDER HEAD, VALVE COVER, VALVES AND STARTING VALVE MECHANISM — Continued

REF. NO.	PART NUMBER	DESCRIPTION
1	62 866 D	WASHER, valve cover stud nut (3)
2	51 145 DAX	COVER, valve 3/8NF NUT (3)
3	51 194 DA	GASKET, valve cover
4	27 080 H	PLUG, valve lever (2)
5	49 950 D	RING, valve lever shaft snap (2)
6	8 110 D	BRACKET, end valve lever (2) 3/8NF NUT (4) 3/8" lock WASHER (on short studs only) (2)
7	51 172 D	SPACER, valve lever (short) (2)
8	133 093 R1	NUT, valve lever adjusting screw (8)
9	46 224 DBX	LEVER w/BUSHING, 46 225 DA, SCREW, 16 067 DA and NUT, 133 093 R1, RH exhaust valve (2)
10	16 067 DA	SCREW, valve lever adjusting (8)
11	46 225 DA	BUSHING, valve lever (8)
12	51 171 DX	SHAFT w/PLUG, 27 080 H, valve lever (2)
13	16 045 D	SPRING, valve lever (4)
14	46 221 DBX	LEVER w/BUSHING, 46 225 DA, SCREW, 16 067 DA and NUT, 133 093 R1, LH intake valve (2)
15	48 061 D	SPACER, valve lever (long) (4)
16	46 222 DBX	LEVER w/BUSHING, 46 225 DA, SCREW, 16 067 DA and NUT, 133 093 R1, RH intake valve (2)
17	46 223 DBX	LEVER w/BUSHING, 46 225 DA, SCREW, 16 067 DA and NUT, 133 093 R1, LH exhaust valve (2)
18	8 112 D	BRACKET, center upper half valve lever 5/16" jam NUT (2) 3/8NF NUT (2) 3/8" lock WASHER (on short stud only) 5/16 x 3/4" hdls. cup-pt. set SCREW (2)
19	8 111 DA	BRACKET, intermediate upper half valve lever (2) 3/8NF NUT (4) 3/8" lock WASHER (2)

-33-

DIESEL ENGINE (TD-91)

REF. NO.	PART NUMBER	DESCRIPTION

CYLINDER HEAD, VALVE COVER, VALVES AND STARTING VALVE MECHANISM — Continued

REF. NO.	PART NUMBER	DESCRIPTION
20	51 169 D	SPRING, rear starting valve shaft
21	256 103 R93	SHAFT w/LEVER, starting valve
22	8 104 D	BRACKET, lower half valve lever (3)
23	51 170 D	SPRING, front starting valve shaft
24	48 057 D	KEY, valve spring seat (16)
25	273 165 R92	ROTATOR, positive valve (8)
26	61 808 D	SPRING, valve (8)
27	6 608 DR	GUIDE, valve (8)
28	48 053 DE	VALVE, intake (4)
28	48 054 DE	VALVE, exhaust (4)
29	250 535 R1	COVER, starting valve (4)
30	46 209 D	KEY, starting valve spring seat (8)
31	46 208 D	SEAT, starting valve spring (4)
32	46 211 D	SPRING, starting valve (4)
33	8 744 DR	GUIDE, starting valve (4)
34	48 058 D	VALVE, starting (4)
35	251 226 R1	HOSE, cylinder head breather tube
36	251 227 R91	CLAMP, cylinder head breather tube hose (will work for 274 085 R91 or 279 025 R91) (2)
37	275 255 R2	TUBE, cylinder head to air cleaner breather, (together with two NUT, 278 953 R91 will work for 275 255 R11)
38	278 953 R91	NUT, cylinder head breather tube (will work for 37 165 D)
39	57 736 D	ELBOW, cylinder head breather tube (at cylinder heat)
40	51 197 D	PIPE, cylinder head breather
41	258 854 R1	STUD, valve lever end bracket (short) (2) 3/8" lock WASHER (2)
42	42 739 DA	PIN, starting valve operating shaft lever (2) 1/4NF NUT (2)

PRINTED IN UNITED STATES OF AMERICA

REF. NO.	PART NUMBER	DESCRIPTION

CYLINDER HEAD, VALVE COVER, VALVES AND STARTING VALVE MECHANISM — CONTINUED

43	271 597 R91	OIL SEAL, starting valve operating shaft (optional with 264 530 R91)
43	264 530 R91	OIL SEAL, starting valve operating shaft (optional with 271 597 R91)
44		WASHER, 1/4" external-tooth lock (2)
45	260 943 R2	LEVER, inner starting valve operating shaft
46	51 195 D	SHAFT, starting valve operating
47	51 529 D	LEVER, outer starting valve operating shaft
48	48 051 DA	STUD, outer long valve lever bracket (3)
49	46 200 D	STUD, center and intermediate valve lever bracket (short) (3) 3/8NF NUT (3) 3/8" lock WASHER (3)
50	32 445 D	STUD, valve lever end bracket (short) (2)
51	250 450 R1	STUD, manifold (TD-91M 501 to 63553) (10)
51	250 450 R1	STUD, manifold (short) TD-91M 63554 up (9)
52	273 851 R1	STUD, manifold (long) TD-91M 63554 up
53	50 410 DA	PLUG, 1/8" oil header
54	260 692 R71	HEAD w/STUDS and valve GUIDES ASSEMBLY, cylinder (order 278 293 R91) (TD-91M 501 to 6007)
54	278 292 R11	HEAD w/STUDS and valve GUIDES ASSEMBLY, cylinder (TD-91 6008 up) (Composed of -

8	GUIDE	6 608 DR
4	GUIDE	8 744 DR
§1	HEAD	
1	PIPE	51 197 D
1	PLUG	51 410 DA
1	PLUG	116 566
2	PLUG	126 045
2	PLUG	264 057 R1
6	PLUG	271 848 R1
1	SLEEVE	279 171 R1
2	STUD	32 445 D
3	STUD	46 200 D
3	STUD	48 051 DA
9	STUD	250 450 R1
2	STUD	258 854 R1
1	STUD	273 851 R1)

55	273 668 R1	GASKET, cylinder head
56	277 298 R1	PLATE, cylinder head cover (TD-91M 6008 up) (3) 5/16 x 1-1/8" hex-hd. cap SCREW (12) 5/16" lock WASHER (12)
57	277 299 R1	GASKET, cylinder head cover plate (TD-91M 6008 up) (3)
	275 689 R11	BRACKET, upper air cleaner (See NOTE)
	275 692 R11	BRACKET, lower air cleaner (See NOTE) 1/2NF NUT (2) 1/2" lock WASHER (2)
	61 316 DA	NUT, cylinder head stud (18)
	278 293 R91	PACKAGE, cylinder head field service (will work for 260 692 R71) (TD-91M 501 to 6007) (Consists of the following parts:

3	GASKET	277 299 R1
1	HEAD	278 292 R11
3	PLATE	272 298 R1)

-34-

DIESEL ENGINE (TD-91)

REF. NO.	PART NUMBER	DESCRIPTION

CYLINDER HEAD, VALVE COVER, VALVES AND STARTING VALVE MECHANISM — CONTINUED

	116 566	PLUG, 1/2" csk-hdls. pipe (TD-91M - 6008 up) (2)
	271 848 R1	PLUG, 3/4" csk-hdls. pipe (6)
	126 045	PLUG, 3/8" csk-hdls. pipe (TD-91M - 501 to 6007) (4)
	126 045	PLUG, 3/8" csk-hdls. pipe (TD-91M - 6008) (2)
	264 057 R1	PLUG, 1-1/4" csk-hdls. pipe (TD-91M 6008 up) (2)
	279 171 R1	SLEEVE, cylinder head stud (TD-91M 6008 up)
		WASHER, 19/32 x 1-3/16" x .095" thick (2)

NOTE - Also listed and illustrated under "Air Cleaner and Connections".

§ - Not Furnished Separately.

CRANKCASE, FRONT COVER, FRONT AND REAR ENGINE SUPPORTS, CAMSHAFT AND RELATED PARTS

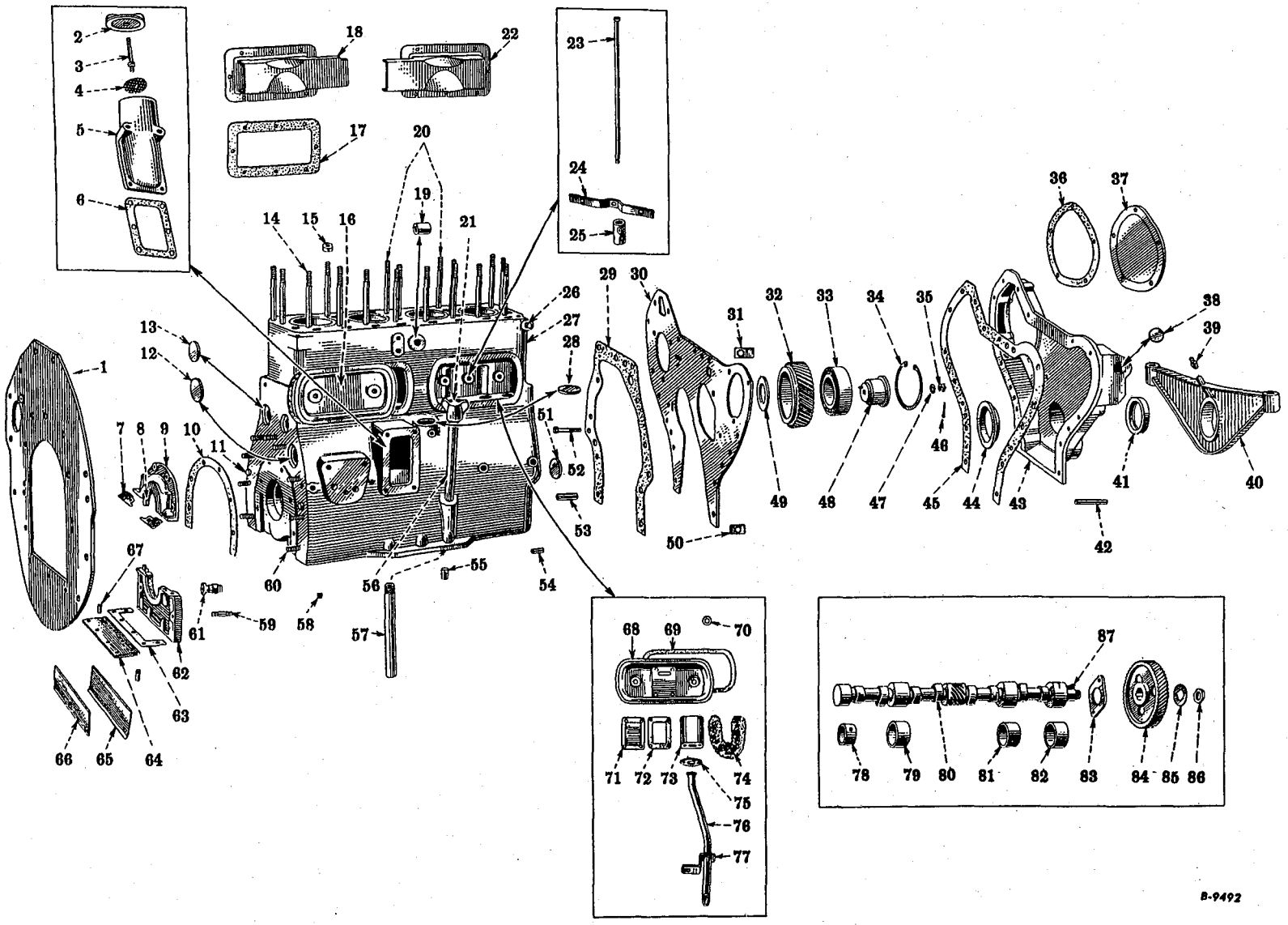

-35-

DIESEL ENGINE (TD-91)

CRANKCASE, FRONT COVER, FRONT AND REAR ENGINE SUPPORTS, CAMSHAFT AND RELATED PARTS — CONTINUED

PRINTED IN UNITED STATES OF AMERICA

REF. NO.	PART NUMBER	DESCRIPTION

CRANKCASE, FRONT COVER, FRONT AND REAR ENGINE SUPPORTS, CAMSHAFT AND RELATED PARTS — CONTINUED

1	51 336 DBX	SUPPORT, rear engine 5/8NF NUT (9) 3/8 x 7/8" hex-hd. cap SCREW 1/2 x 1-1/4" hex-hd. cap SCREW (6) 3/8" lock WASHER 1/2" lock WASHER (6) 5/8" lock WASHER (9)
2	4 819 D	CAP, oil filler
3	28 797 D	STUD, oil filler cap 3/8" NUT
4	50 411 D	SCREEN, oil filler
5	8 355 D	BODY, oil filler 3/8 x 1" hex-hd. cap SCREW (2) 3/8 x 2-1/2" hex-hd. cap SCREW (2) 3/8" lock WASHER (4)
6	42 733 DB	GASKET, oil filler body
7	271 702 R1	GASKET, crankshaft rear oil seal retainer (between halves) (2)
8	271 703 R91	OIL SEAL, rear crankshaft (2)
9	271 700 R1	RETAINER, upper crankshaft rear oil seal (grey iron) 3/8 x 1-3/8" hex-hd. cap SCREW (4) 3/8 x 3-1/4" hex-hd. cap SCREW (2) 3/8" lock WASHER (6)
10	252 032 R3	GASKET, crankshaft rear oil seal retainer
11	25 086 DA	PIN, rear engine support dowel (2)
12	172 593	PLUG, 2-1/2" camshaft rear bearing expansion (2)
13	256 658 R1	PLUG, 1-3/4" crankcase front and rear expansion (optional with 172 578) (4)
13	172 578	PLUG, crankcase front and rear expansion (optional with 256 658 R1) (4)
14	47 981 DA	STUD, cylinder head (short) (16)
15	61 316 DA	NUT, cylinder head stud (18)
16	51 324 D	PLATE, front push rod chamber side 3/8 x 1-1/8" hex-hd. cap SCREW (2)
17	51 316 DB	GASKET, water header (2)
18	272 801 R91	HEADER, rear water 5/16 x 7/8" hex-hd. cap SCREW (8) 5/16" lock WASHER (8)
19	50 827 D	BUSHING, cross shaft (2)
20	275 686 R1	STUD, cylinder head (long) (2)
21	275 894 R11	GAUGE, oil level
22	272 800 R91	HEADER, front water 5/16NF NUT 5/16 x 7/8" hex-hd. cap SCREW (7) 5/16" lock WASHER (8)
23	261 120 R91	ROD, valve push (optional with 47 933 DXA) (8)
23	47 933 DXA	ROD, valve push (optional with 261 120 R91) (8)
24	51 790 D	STOP, valve tappet (2) 3/8 x 5/8" hex-hd. cap SCREW (2) 3/8" lock WASHER (2)
25	50 951 D	TAPPET, valve (8)
26	50 826 D	PIN, cross shaft return spring
27	275 647 R92	CRANKCASE, 275 604 R12, w/set of SLEEVES, 267 266 R91

-36-

DIESEL ENGINE (TD-91)

REF. NO.	PART NUMBER	DESCRIPTION

CRANKCASE, FRONT COVER, FRONT AND REAR ENGINE SUPPORTS, CAMSHAFT AND RELATED PARTS — CONTINUED

27	275 604 R12	CRANKCASE ASSEMBLY, less SLEEVES and PISTONS (Composed of - 1 BEARING 51 305 DA 1 BEARING 51 306 DAR 1 BEARING 51 307 DAR 1 BEARING 252 011 R2 2 BUSHING 50 827 D 3 CAP 303 381 R1 1 CAP 303 382 R1 1 CAP 303 383 R1 §1 CRANKCASE 2 DOWEL 25 086 DA 2 DOWEL 52 605 D X LOCKWIRE 278 027 R1 1 PIN 50 826 D 5 PLUG 50 410 DA 1 PLUG 103 865 2 PLUG 126 045 1 PLUG 172 580 1 PLUG 172 593 4 PLUG 256 658 R1 1 PLUG 264 475 R1 2 PLUG 268 996 R1 8 SCREW 275 687 R1 4 SCREW 275 688 R1 1 STUD 272 799 R1 8 STUD 49 952 D 2 STUD 275 686 R1 16 STUD 47 981 DA 1 STUD 263 681 R1 1 STUD 264 377 R1 8 WASHER 39 422 D 4 WASHER 46 246 D)
28	172 580	PLUG, 1-7/8" crankcase distributor hole expansion
29	261 201 R3	GASKET, crankcase front plate
30	261 204 R31	PLATE w/LOCK, 46 250 D and NUT, 264 723 R1, front crankcase 3/8 x 7/8" hex-hd. cap SCREW (4)
31	46 250 D	LOCK, crankcase front plate cap screw 3/16 x 1/4" rd-hd. RIVET
32	264 665 R1	GEAR, idler
33	266 635 R91	BEARING, idler gear (optional with 264 663 R91)
33	264 663 R91	BEARING, idler gear (optional with 266 635 R91)
34	252 862 R1	RING, idler gear bearing snap
35		NUT, 1/2NF slotted
36	48 143 DC	GASKET, fuel pump gear cover
37	48 142 D	COVER, fuel pump gear 5/16 x 1/2" hex-hd. cap SCREW (6) 5/16" lock WASHER (6) 11/32 x 11/16 x 1/16" flat WASHER (6)
38	172 558	PLUG, 1-1/4" front cover hour meter pad expansion
39	109 461	FITTING, front engine support lubrication (Lincoln 5000) (optional with 119 512)
39	119 512	FITTING, front engine support lubrication (Alemite 1610) (optional with 109 461)
40	275 694 R1	SUPPORT, front engine 1/2NF NUT (2) 1/2NF x 3-1/4" hex-hd. cap SCREW (2) 1/2" lock WASHER (2)

X - As Required
§ - Not Furnished Separately

PRINTED IN UNITED STATES OF AMERICA

REF. NO.	PART NUMBER	DESCRIPTION
		CRANKCASE, FRONT COVER, FRONT AND REAR ENGINE SUPPORTS, CAMSHAFT AND RELATED PARTS — CONTINUED
41	264 534 R91	OIL SEAL, crankshaft front (optional with 258 511 R91)
41	258 511 R91	OIL SEAL, crankshaft front (optional with 264 534 R91)
42	260 119 R1	POINTER, timing
43	261 195 R1	COVER ASSEMBLY, crankcase front (Composed of - §1 COVER 1 DEFLECTOR 46 129 D 1 OIL SEAL 258 511 R91 1 PLUG 172 558 1 POINTER 260 119 R1) 3/8 x 1" hex-hd. cap SCREW (4) 3/8 x 1-3/8" hex-hd. cap SCREW (9) 3/8" lock WASHER (13)
44	46 129 D	DEFLECTOR, crankshaft front oil
45	261 200 R2	GASKET, crankcase front cover
46		PIN, 1/8 x 7/8" cotter
47	263 561 R1	WASHER, idler gear shaft bolt
48	264 661 R31	SHAFT w/roll PIN, 18 400 R1 idler gear (will work for 264 661 R21)
49	264 662 R2	SPACER, idler gear shaft
50	354 489 R91	LOCK, crankcase front plate cap screw (4)
51	256 658 R1	PLUG, 1-3/4" crankcase front and rear expansion (4)
52	256 820 R1	BOLT, idler gear shaft
53	52 605 D	PIN, crankcase front cover dowel (2)
54	250 914 R1	PIN, crankshaft center bearing dowel (TD-91M 501 to 5117)
55	104 942	PLUG, crankcase locating hole (order No. 6 standard cork No. 2X grade, 9/16 x 3/4 x 15/16" long) (2)
56	51 325 D	SLEEVE, oil level gauge
57	51 203 DA	PIPE, oil level gauge
58	50 410 DA	PLUG, oil header (5)
59	263 681 R1	STUD, cross shaft latch bracket 3/8NF NUT (2) 3/8" lock WASHER (2)
60	49 952 D	STUD, rear engine support (not tinned) (8) 1/2NF NUT (8) 1/2" lock WASHER (8)
60	264 377 R1	STUD, rear engine support (tinned)
61	31 729 D	COCK, crankcase water drain
62	271 701 R1	RETAINER, lower crankshaft rear oil seal 3/8 x 1-1/2" hex-hd. cap SCREW (2) 3/8" lock WASHER (2)
63	51 312 D	GASKET, crankcase oil seal retainer plate
64	51 311 D	PLATE, crankcase oil seal retainer 3/8 x 1" hex-hd. cap SCREW (4) 3/8" lock WASHER (4)
65	46 136 D	DUST SEAL, crankcase rear 3/8NF x 5/8" hex-hd. cap SCREW (3) 3/8" lock WASHER (3)
66	46 137 D	GASKET, crankcase rear dust seal
67	268 770 R2	PLUG, crankcase oil seal retainer plate felt (2)
68	59 488 D	PLATE, front push rod chamber side 3/8 x 1-1/8" hex-hd. cap SCREW (2)
69	60 570 D	GASKET, push rod chamber side plate (2)
70	62 866 D	WASHER, push rod chamber side plate bolt (4)

-37-

DIESEL ENGINE (TD-91)

REF. NO.	PART NUMBER	DESCRIPTION
		CRANKCASE, FRONT COVER, FRONT AND REAR ENGINE SUPPORTS, CAMSHAFT AND RELATED PARTS — CONTINUED
71	59 480 D	BAFFLE, breather
72	59 481 DB	GASKET, breather body
73	265 926 R91	BODY, breather (die cast) (optional with 9 258 DCX) No. 10 x 5/8" hex-hd. tapping SCREW (4) 5/16 x 1" hex-hd. tapping SCREW (2)
73	9 258 DCX	BODY w/BREATHER, 9 258 DC (will work for 265 926 R91 when 265 926 R91 is not available) No. 10 x 1/2" rd-hd. mach. SCREW (4) No. 10 lock WASHER (4) 5/16 x 7/8" hex-hd. cap SCREW (2) 5/16" lock WASHER (2)
73	9 258 DC	BODY, breather (grey iron) No. 10 x 1/2" rd-hd. mach. SCREW (4) No. 10 lock WASHER (4)
74	59 482 D	ELEMENT, breather
75	59 484 D	FLANGE, breather pipe 5/16 x 1" hex-hd. tapping SCREW (2) 5/16 x 7/8" hex-hd. cap SCREW (used with 9 258 DC) (2) 5/16" lock WASHER (used with 9 258 DC) (2)
76	59 486 DA	PIPE, breather
77	59 487 D	CLIP, breather pipe
78	252 011 R2	BEARING, camshaft rear (will work for 51 308 DA)
79	51 307 DAR	BEARING, camshaft No. 3
80	50 950 DA	CAMSHAFT
81	51 306 DAR	BEARING, camshaft No. 2
82	51 305 DAR	BEARING, camshaft front
83	50 948 DA	PLATE, camshaft thrust 3/8 x 7/8" hex-hd. cap SCREW (2) 3/8" lock WASHER (2)
84	251 658 R1	GEAR, camshaft (54 T)
85	16 025 D	LOCK, camshaft gear nut
86	261 285 R1	NUT, camshaft gear (will work for 24 174 V)
87	112 139	KEY, 1/4 x 7/8" (Woodruff "A") camshaft gea
	303 381 R1	CAP, front and intermediate crankshaft bearing (will work for 8 225 DA and 256 856 R1) (See NOTE) (3)
	303 382 R1	CAP, center crankshaft bearing (will work for 8 226 DC and 256 857 R2) (See NOTE)
	303 383 R1	CAP, rear crankshaft bearing (will work for 8 078 DA and 256 858 R1) (See NOTE)
	264 723 R1	NUT, spline (used with crankcase front plate)
	18 400 R1	PIN, 3/16 x 5/8" roll (Esna)
	103 865	PLUG, 1/8" crankcase (oil header)
	126 045	PLUG, 3/8" crankcase pipe (headless) (standard) (oil header) (2)
	264 475 R1	PLUG, idler gear bearing metering
	268 996 R1	PLUG, 3/8" rear crankcase (oil header) (2)
		NOTE - Place an emergency order through regular service parts channels. Orders should be marker "machining facilities are available."
		§ - Not Furnished Separately

PRINTED IN UNITED STATES OF AMERICA

REF. NO.	PART NUMBER	DESCRIPTION

CRANKCASE, FRONT COVER, FRONT AND REAR ENGINE SUPPORTS, CAMSHAFT AND RELATED PARTS — CONTINUED

275 687 R1	SCREW, front, intermediate and rear crankshaft bearing cap (8)
275 688 R1	SCREW, center crankshaft bearing cap (4)
48 384 D	SHIM, front engine support (heavy) (X)
48 385 D	SHIM, front engine support (light) (X)
272 799 R1	STUD, crankcase water header
39 122 D	WASHER, front, intermediate and rear crankshaft bearing cap cap screw (8)

CRANKSHAFT AND RELATED PARTS, CONNECTING RODS, PISTONS, CYLINDER SLEEVES, DRIVE PULLEY AND FLYWHEEL

-38-

DIESEL ENGINE (TD-91)

REF. NO.	PART NUMBER	DESCRIPTION

CRANKCASE, FRONT COVER, FRONT AND REAR ENGINE SUPPORTS, CAMSHAFT AND RELATED PARTS — CONTINUED

46 246 D	WASHER, center crankshaft bearing cap capscrew (4)
	WIRE, lock (16 ga. x 10" long) (crankshaft bearing cap screw (order 278 027 R1) (6)
278 027 R1	WIRE, locking bulk (16 ga.) (.0625) (customer must specify length required) (X)

X - As Required.

CRANKSHAFT AND RELATED PARTS, CONNECTING RODS, PISTONS, CYLINDER SLEEVES, DRIVE PULLEY AND FLYWHEEL — CONTINUED

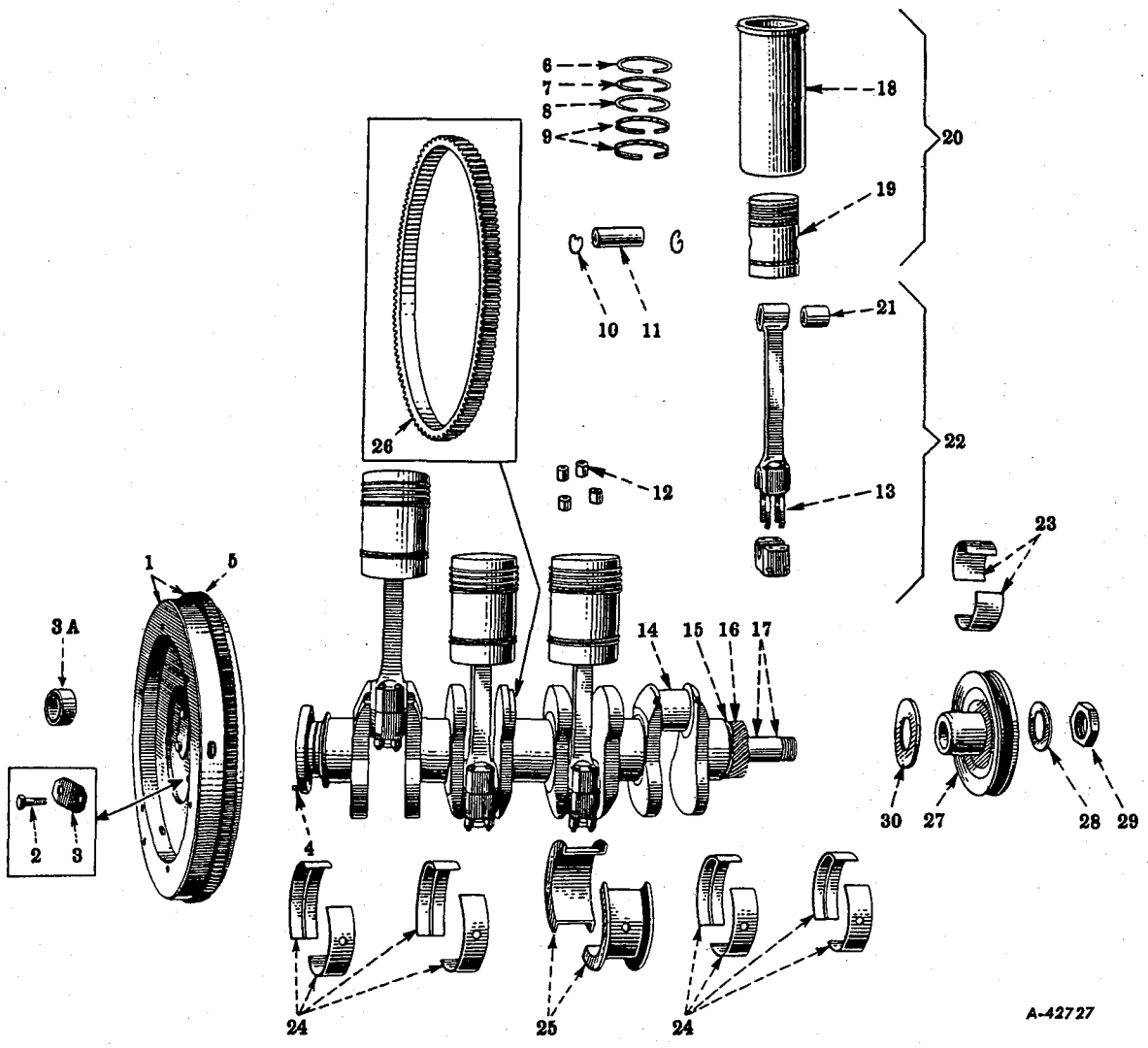

REF. NO.	PART NUMBER	DESCRIPTION

CRANKSHAFT AND RELATED PARTS, CONNECTING RODS, PISTONS, CYLINDER SLEEVES, DRIVE PULLEY AND FLYWHEEL — CONTINUED

1	6 526 DBX	FLYWHEEL w/ring GEAR, 33 817 DE and CORK, 104 942
2	43 832 D	BOLT, flywheel (6)
3	47 628 D	LOCK, flywheel bolt (3)
3A	ST 211	BEARING, clutch pilot ball
4	46 923 D	PIN, flywheel dowel (2)
5	33 817 DE	GEAR, flywheel ring (157 T)
6	267 994 R2	RING, compression piston (cr-pltd.) (top or first groove) (Perfect Circle 29582) (4)
7	267 995 R1	RING, compression piston (second groove) (Prefect Circle 20A177) (4)
8	267 996 R1	RING, compression tapered (third groove) (Perfect Circle 29853) (4)
9	267 997 R1	RING, oil piston (fourth and fifth groove) (Perfect Circle 72A584) (8)
10	31 194 H	RING, piston pin retainer (8)
11	254 957 R2	PIN, piston (standard) (optional with 264 045 R1) (4)
11	264 045 R1	PIN, piston (standard) (optional with 254 957 R2) (4)
11	264 046 R1	PIN, piston (.005" oversize) (optional with 254 958 R2) (4)
11	254 958 R2	PIN, piston (.005" oversize) (optional with 264 046 R1) (4)
12	1 832 YA	NUT, connecting rod bolt (16)
13	251 683 R3	BOLT, connecting rod (16) 3/32 x 3/4" cotter PIN (16)
14	275 606 R11	CRANKSHAFT w/GEAR, 275 607 R1, two PINS, 46 923 D and PIN, 17 136 R1 (standard)
14	275 705 R91	CRANKSHAFT, .030" undersize, w/GEAR, 275 607 R1, two PINS, 46 923 D, PIN, 17 136 R1 and set of BEARINGS, 260 752 R93
15	117 977	KEY, crankshaft gear (Woodruff, 5/16 x 1")
16	261 199 R1	GEAR, crankshaft (27 T)
17	124 554	KEY, fan drive pulley (Woodruff "B", 5/16" x 1") (2)
18	267 265 R1	SLEEVE, cylinder (SS marking for service) (4)
19	267 259 R3	PISTON (aluminum) (SS marking for service) (4)
20	267 263 R91	SLEEVE w/PISTON ASSEMBLY, cylinder (aluminum) (4) (Composed of -
		1 PIN 254 957 R2
		1 PISTON 267 259 R3
		2 RETAINER 31 194 H
		1 RING 267 994 R2
		1 RING 267 995 R1
		1 RING 267 996 R1
		1 RING 267 997 R1
		1 SLEEVE 267 265 R1)
20	267 266 R91	SLEEVE SET (consists of four SLEEVES w/PISTON and RINGS, 267 263 R91)

-39-

DIESEL ENGINE (TD-91)

REF. NO.	PART NUMBER	DESCRIPTION

CRANKSHAFT AND RELATED PARTS, CONNECTING RODS, PISTONS, CYLINDER SLEEVES, DRIVE PULLEY AND FLYWHEEL — CONTINUED

21	47 640 DR	BUSHING, connecting rod (4)
22	251 674 R11	ROD ASSEMBLY, connecting (4) (Composed of -
		4 BOLT 251 683 R3
		1 BUSHING 47 640 DR
		4 NUT 1 832 YA
		4 PIN 103 373
		§1 ROD)
23	251 684 R21	BEARING, connecting rod (2 halves) (standard) (4)
23	251 685 R21	BEARING, connecting rod (2 halves) (.030" undersize) (4)
23	263 138 R11	BEARING, connecting rod (2 halves) (.002" undersize) (4)
23	263 140 R11	BEARING, connecting rod (2 halves) (.032" undersize) (4)
24	263 188 R91	BEARING, front, rear and intermediate crankshaft (2 halves) (.002" undersize) (4)
24	263 195 R91	BEARING, front, rear and intermediate crankshaft (2 halves) (.032" undersize) (4)
24	259 965 R91	BEARING, front, rear and intermediate crankshaft (2 halves) (standard) (4)
24	259 968 R91	BEARING, front, rear and intermediate crankshaft (2 halves) (.030" undersize) (4)
25	269 617 R92	BEARING, center crankshaft (2 halves) (.002" undersize)
25	269 620 R92	BEARING, center crankshaft (2 halves) (.032" undersize)
25	269 605 R92	BEARING, center crankshaft (2 halves) (standard)
25	269 611 R92	BEARING, center crankshaft (2 halves) (.030" undersize)
26	275 607 R1	GEAR, balancer drive (90 T)
27	6 652 DB	PULLEY, fan drive (not front power take-off coupling)
28	4 254 DA	LOCK, camshaft gear nut (not front power take-off coupling)
29	4 253 D	NUT, crankshaft gear
30	36 796 DA	FLINGER, crankshaft oil
	104 941	CORK, flywheel balancing hole No. 5 (No. 2X grade, 1/2 x 11/16 x 7/8" long) (X)
	104 942	CORK, flywheel balancing hole No. 6 (No. 2X grade, 9/16 x 3/4 x 15/16" long) (X)
	260 752 R93	BEARING SET, crankshaft and connecting rod (.030" undersize) (Consists of -
		4 BEARING 251 685 R21
		4 BEARING 259 968 R91
		1 BEARING 269 611 R92)
	268 103 R91	PACKAGE, piston ring field service (Perfect Circle) (consists of 12 compression RINGS and 8 oil RINGS)
	17 136 R1	PIN, 3/16 x 1/2" roll

X - As Required
§ - Not Furnished Separately

REF. NO.	PART NUMBER	DESCRIPTION

STARTING MECHANISM

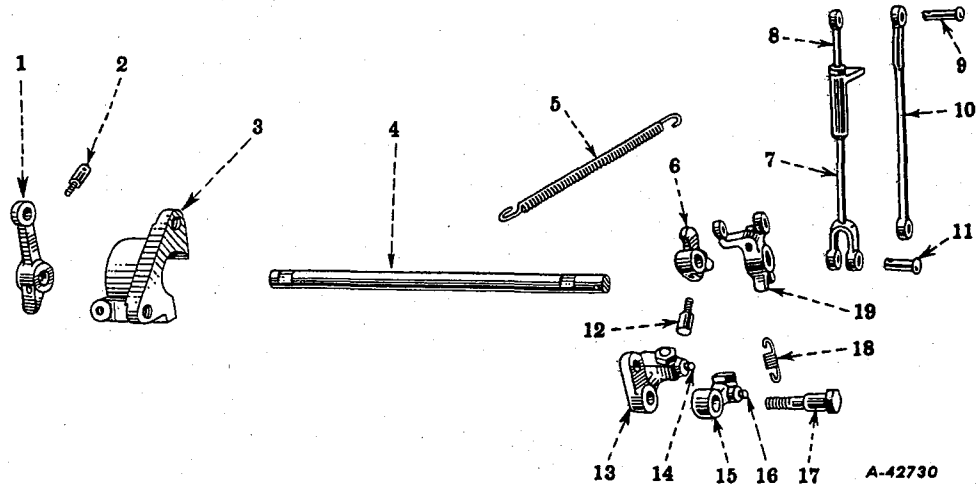

REF. NO.	PART NUMBER	DESCRIPTION
1	275 821 R1	LEVER, cross shaft operating (TD-91M 501 to 6007)
1	279 242 R1	LEVER, cross shaft operating (TD-91M 6008 up)
2	20 586 D	PIN, cross shaft operating lever 5/16NF NUT 5/16" lock WASHER
3	275 702 R1	BRACKET, cross shaft 5/16" jam NUT 3/8 x 2-1/2" hex-hd. cap SCREW (2) 5/16 x 1-1/4" slt-hdls. oval-pt. set SCREW 3/8" lock WASHER (2)
4	52 173 D	SHAFT, control cross (will work for 275 700 R1)
5	52 176 DC	SPRING, cross shaft return
6	52 626 DA	LEVER, cross shaft jaw (optional with 262 607 R2)
6	262 607 R2	LEVER, cross shaft jaw (optional with 52 626 DA)
7	51 530 DAXA	ROD, starting valve cross shaft operating (optional with 262 565 R92)
7	262 565 R92	ROD, starting valve cross shaft operating (optional with 51 530 DAXA) 5/16NF NUT
8	56 174 D	ADJUSTER, starting valve cross shaft operating rod (optional with 56 587 DX)
8	56 587 DX	ADJUSTER, starting valve cross shaft operating rod (optional with 56 174 D)
9	51 068 D	PIN, starting valve operating shafe lever 3/32 x 5/8" cotter PIN
10	253 621 R1	ROD, carburetor control (will work for 51 067 DX) 1/16 x 5/8" cotter PIN
11	103 495	PIN, starting valve cross shaft operating 3/32 x 5/8" cotter PIN
12	20 586 D	PIN, cross shaft jaw lever 5/16NF NUT 5/16" lock WASHER

REF. NO.	PART NUMBER	DESCRIPTION

STARTING MECHANISM — CONTINUED

REF. NO.	PART NUMBER	DESCRIPTION
13	8 617 DAX	BRACKET w/PIN, 52 623 D, cross shaft latch 3/8" jam NUT 3/8NF NUT 3/8 x 1-1/2" dog-pt. set SCREW 3/8" lock WASHER
14	52 623 D	PIN, cross shaft latch bracket
15	52 621 DX	LATCH w/PIN, 52 623 D, cross shaft
16	52 623 D	PIN, cross shaft latch spring
17	55 354 DA	PIN, cross shaft latch
18	52 624 D	SPRING, cross shaft latch
19	52 620 D	JAW, cross shaft 5/16" jam NUT 1/8 x 1" cotter PIN 5/16 x 1-1/4" hdls. oval-pt. set SCREW
	Q 1 537	WASHER, 21/32 x 1" x No. 12 ga. steel

REF. NO.	PART NUMBER	DESCRIPTION

EXHAUST SYSTEM

INTAKE MANIFOLD AND EXHAUST MANIFOLD

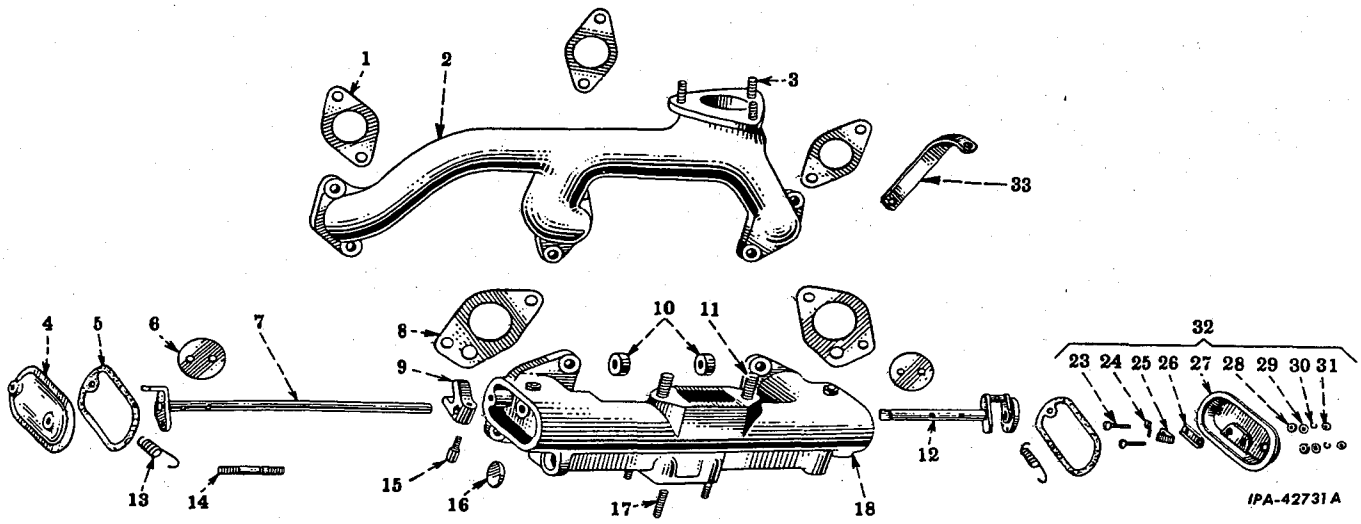

1	48 311 D	GASKET, exhaust manifold (3)
2	275 698 R91	MANIFOLD w/three STUDS, 25 122 D, exhaust
3	25 122 D	STUD, exhaust pipe flange (3) 1/2" NUT (3)
4	263 312 R1	COVER, rear intake manifold end 5/16NF NUT 1/4 x 1-3/8" hex-hd. cap SCREW 1/4 x 1/2" x No. 18 ga. WASHER
	54 909 H	WASHER, 21/64 x 5/8" x No. 18 ga.
5	52 520 DB	GASKET, intake manifold end cover (2)
6	51 672 D	VALVE, intake manifold butterfly (2) No. 8 x 7/16" rd-hd. slt. mach. SCREW w/external-tooth lock WASHER (4)
7	51 671 DX	SHAFT w/LEVER, rear intake manifold control 5/16" NUT (2) 5/16 x 1" hdls. oval-pt. set SCREW (2)
8	51 668 DB	GASKET, intake manifold (2)
9	51 673 D	LEVER, intake manifold control (optional with 263 031 R91)
9	263 031 R91	LEVER, intake manifold control (optional with 51 673 D)
10	53 083 D	SEAL, intake manifold control shaft (optional with 264 531 R91) (2)
10	264 531 R91	SEAL, intake manifold control shaft (optional with 53 083 D) (2)
10	273 701 R91	SEAL, intake manifold control shaft (optional with 53 083 D and 264 531 R91) (2)
11	G 1 988	STUD, air cleaner pipe (2)
12	263 316 R93	SHAFT and disc CONTACT, 265 913 R91, w/two EYELETS, 188 664, front manifold
13	56 107 D	SPRING, intake manifold control (2)

REF. NO.	PART NUMBER	DESCRIPTION

EXHAUST SYSTEM

INTAKE MANIFOLD AND EXHAUST MANFOLD - Continued

14	263 318 R1	STUD, intake manifold control spring (2) 5/16NF NUT (2) 5/16" lock WASHER (2)
15	42 739 DA	PIN, intake manifold control lever 1/4NF NUT 1/4" external-tooth lock WASHER
16	172 545	PLUG, intake manifold expansion (2)
17	50 705 D	STUD, carburetor (4)
18	263 310 R13	MANIFOLD ASSEMBLY, intake (Composed of - 1 LEVER 51 673 D §1 MANIFOLD 1 PIN 42 739 DA 1 SHAFT 51 671 DX 1 SHAFT 263 316 R93 2 SPRING 56 107 D 2 STUD G 1 988 2 PLUG 172 545 2 SEAL 53 083 D 4 STUD 50 705 D 2 STUD 263 318 R1 2 VALVE 51 672 D) 5/16 x 1" hdls. oval-pt. set SCREW (2) 5/16" NUT (2) No. 8 x 7/16" slt-rd-hd. SCREW (4)
23	263 330 R1	SCREW, No. 10NF x 1" pan-hd. (one required when used with magneto ignition) (2)
23	263 356 R1	SCREW, No. 10NF x 5/8" pan-hd. (used with magneto ignition only) (optional with 437 243)
23	437 243	SCREW, No. 10NF x 5/8" pan-hd. (used with magneto ignition only) (optional with 263 356 R1)
24	263 328 R1	BLADE, switch contact (used with battery ignition only)
24	263 358 R1	BLADE, magneto grounding (used with magneto ignition only)

§ - Not Furnished Separately

REF. NO.	PART NUMBER	DESCRIPTION

EXHAUST SYSTEM

INTAKE MANIFOLD AND EXHAUST MANIFOLD - Continued

25	263 327 R1	BLADE, switch contact
26	263 325 R2	STRIP, switch blade mounting
27	263 311 R1	COVER, front intake manifold end (order 263 311 R12)
28	263 326 R1	INSULATOR, terminal (one required when used with magneto ignition) (2)
28	263 357 R1	SLEEVE, magneto grounding (used with magneto ignition only)
29	263 329 R1	WASHER, 1-3/4 x 1/2" x No. 16 ga. cd-pltd. (one required when used with magneto ignition) (2)
30		WASHER, No. 10 cd-pltd. external-tooth lock (2)
31		NUT, No. 10NF cd-pltd. (2)
32	263 311 R12	COVER ASSEMBLY, front end intake manifold (for tractors equipped with battery ignition) (Composed of - 1 BLADE 263 327 R1; 1 BLADE 263 328 R1; §1 COVER; 2 INSULATOR 263 326 R1; 2 SCREW 263 330 R1; 1 STRIP 263 325 R2; 2 WASHER 263 329 R1)
	54 909 H	WASHER, 21/64 x 5/8" x No. 18 ga. cop. 5/16NF NUT 1/4 x 1-3/8" hex-hd. cap SCREW 1/4 x 1/2" x No. 18 ga. cop. WASHER
32	263 345 R92	COVER ASSEMBLY, front end intake manifold (for tractors equipped with magneto ignition) (Composed of - 1 BLADE 263 327 R1; 1 BLADE 263 358 R1; §1 COVER; 1 INSULATOR 263 326 R1; 1 SCREW 263 330 R1; 1 SCREW 263 356 R1; 1 SLEEVE 263 357 R1; 1 STRIP 263 325 R2; 1 WASHER 263 329 R1)
	54 909 H	WASHER, cop., 21/64 x 5/8" x No. 18 ga. 5/16NF NUT 1/4 x 1-3/8" hex-hd. cap SCREW 1/4 x 1/2" No. 18 ga. cop. WASHER
33	271 481 R1	BRACE, muffler (TD-91M 63554 up)
	551 655 R1	WASHER, 19/32 x 1" x 11 ga.
	265 913 R91	DISC w/EYELET, 188 664, contact (will work for 263 317 R92)
	188 664	EYELET, 1/4 x 7/32" plain brs. (used on intake manifold control shaft) (2)
	250 451 R1	NUT, exhaust manifold stud (6)
	250 451 R1	NUT, intake manifold stud (4)

§ - Not Furnished Separately

REF. NO.	PART NUMBER	DESCRIPTION

EXHAUST SYSTEM

EXHAUST MUFFLER AND PIPE EXTENSION

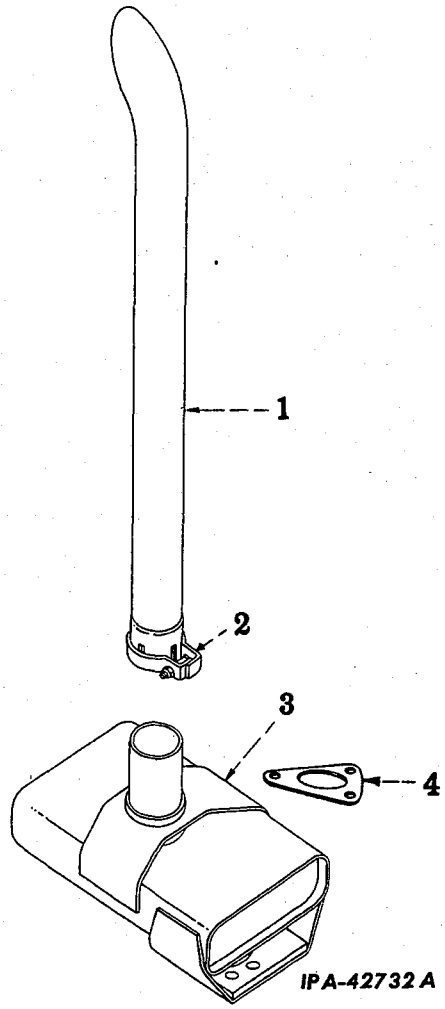

1	276 224 R1	EXTENSION, exhaust pipe (together with CLAMP, 276 222 R91 will work for 275 284 R91)
2	276 222 R91	CLAMP, exhaust muffler pipe extension
3	275 283 R92	MUFFLER, exhaust 1/2" NUT (3) 5/16" NUT (for attaching muffler to muffler brace) 5/16 x 5/8" hex-hd. cap SCREW (for attaching muffler to muffler brace)
4	39 397 D	GASKET, exhaust muffler flange

REF. NO.	PART NUMBER	DESCRIPTION

AIR CLEANER AND CONNECTIONS
(Donaldson) (T-61)

-43-

FUEL SYSTEM

REF. NO.	PART NUMBER	DESCRIPTION

AIR CLEANER AND CONNECTIONS
(Donaldson) (T-61) - Continued

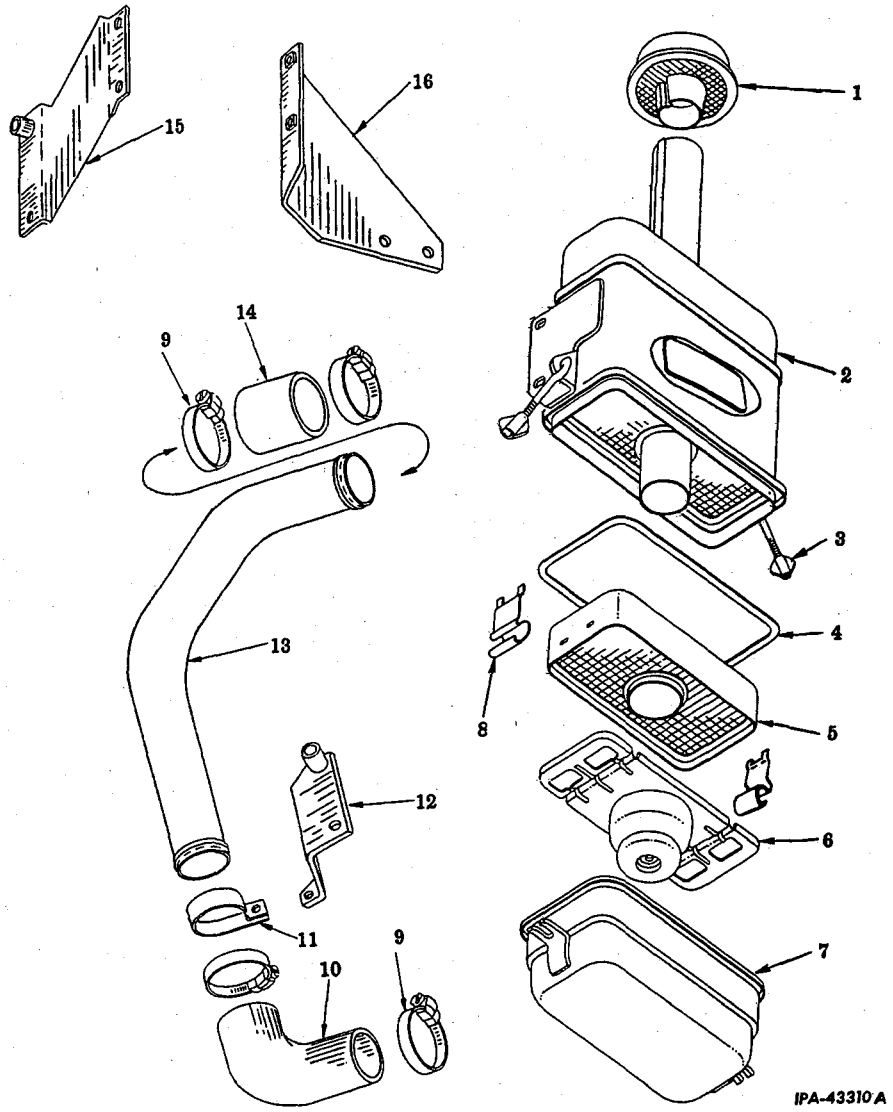

1	361 722 R91	CAP, air stack
2	276 213 R92	BODY, air cleaner (P-16181)
3	276 216 R91	ROD, side (P-16067) (2)
4	276 217 R1	GASKET, oil cup (P-16179)
5	276 214 R91	SCREEN, housed (P-16175)
6	276 219 R91	BAFFLE (P-16180)
7	276 215 R91	CUP, oil (P-16176)
8	276 218 R1	CLIP, spring (P-16178)
9	279 026 R91	CLAMP, air cleaner pipe hose (4)
10	275 362 R1	ELBOW, air cleaner pipe
11	275 361 R1	CLAMP, air cleaner pipe
12	275 359 R11	BRACE w/SPACER and welding NUT, air cleaner pipe 1/4NF x 3/4" hex-hd. cap SCREW 1/4" lock WASHER
13	275 356 R1	PIPE, air cleaner
14	275 340 R2	HOSE, 2-1/2 x 3" long 8 ply, air cleaner pipe
15	275 364 R11	BRACKET w/SPACER, and welding NUT, rear air cleaner 1/2 x 7/8" hex-hd. cap SCREW (2) 1/2" lock WASHER (2)
16	275 363 R11	BRACKET w/SPACER and welding NUT, front air cleaner 7/16 x 1-1/4" hex-hd. cap SCREW (2) 7/16" lock WASHER (2)

PRINTED IN UNITED STATES OF AMERICA

REF. NO.	PART NUMBER	DESCRIPTION

AIR CLEANER AND CONNECTIONS
(Donaldson) (T-61) - Continued

275 377 R92 CLEANER ASSEMBLY, air (605506)
(Composed of -

1	BAFFLE	276 219 R91
1	BODY	276 213 R92
1	CLIP	276 218 R1
1	CUP	276 215 R91
1	GASKET	276 217 R1
2	ROD	276 216 R91
1	SCREEN	276 214 R91)

3/8NF x 3/4" hex-hd. cap SCREW (4)
3/8" lock WASHER (4)
13/32 x 13/16" x No. 16 ga. (4)

AIR CLEANER AND CONNECTIONS
(Donaldson) (TD-61 and TD-91)

-44-

FUEL SYSTEM

REF. NO.	PART NUMBER	DESCRIPTION

AIR CLEANER AND CONNECTIONS
(Donaldson) (T-61) - Continued

364 441 R1 HOSE, 5/16 x 8-3/4" long air cleaner to valve cover (illustrated in "Cylinder Head, Valve Cover, Valves and Valve Levers" Section)

AIR CLEANER AND CONNECTIONS
(Donaldson) (TD-61 and TD-91) - Continued

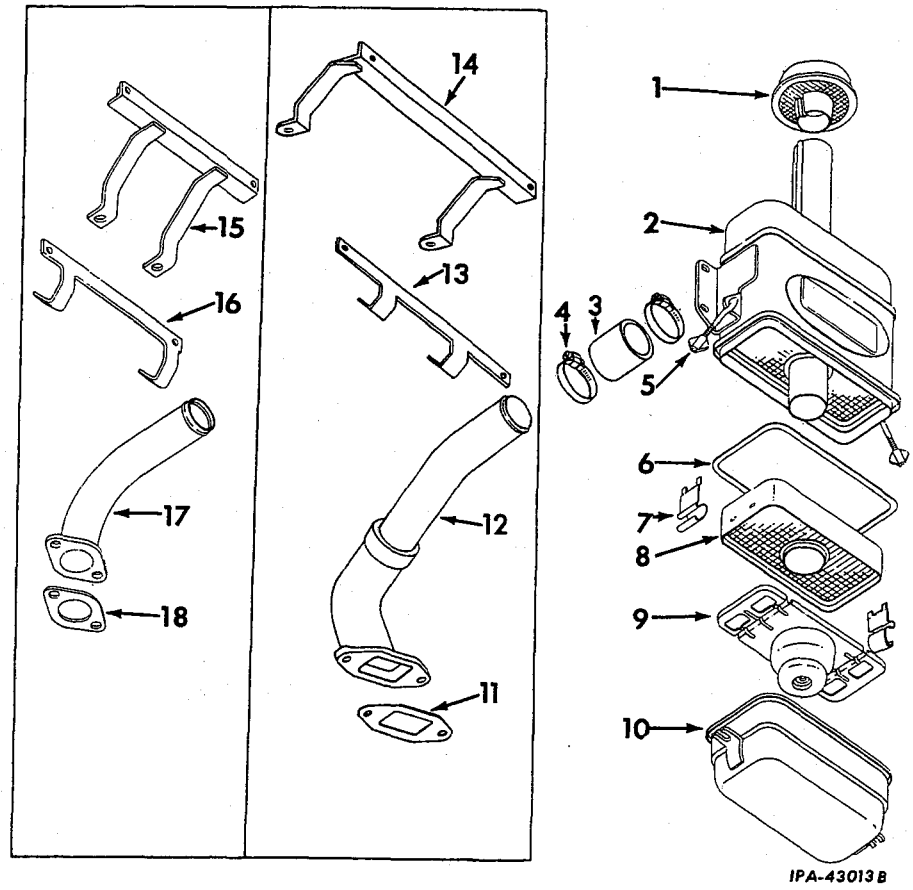

1	361 722 R91	CAP, air stack (not used with "Air Pre-Cleaner") (will work for 365 316 R91)
2	276 212 R92	BODY, air cleaner (P-16174)
3	275 340 R2	HOSE, 2-1/2 x 3" long 8 ply, air cleaner pipe
4	274 088 R91	CLAMP, air cleaner pipe hose (2)
5	276 216 R91	ROD, side (P-16067) (2)
6	276 217 R1	GASKET, oil cup (P-16179)
7	276 218 R1	CLIP, spring (P-16178)
8	276 214 R91	SCREEN, housed (P-16175)
9	276 219 R91	BAFFLE (16180)
10	276 215 R91	CUP, oil (P-16176)
11	54 040 D	GASKET, air cleaner pipe elbow (TD-61)
12	275 357 R11	PIPE w/ELBOW, air cleaner (TD-61)

PRINTED IN UNITED STATES OF AMERICA

REF. NO.	PART NUMBER	DESCRIPTION

AIR CLEANER AND CONNECTIONS
(Donaldson) (TD-61 and TD-91) - Continued

13	275 822 R91	BRACKET, lower air cleaner (TD-61) (See NOTE) 3/8NF NUT (2) 3/8" lock WASHER (2)
14	275 818 R11	BRACKET, upper air cleaner (See NOTE) (TD-61) 17/32 x 1-1/16 x .095" thick WASHER (2)
15	275 689 R11	BRACKET, upper air cleaner (See NOTE) (TD-91) 19/32 x 1-3/16 x .095" thick WASHER (2)
16	275 692 R11	BRACKET, lower air cleaner (See NOTE) (TD-91) 1/2NF NUT (2) 1/2" lock WASHER (2)
17	275 253 R11	PIPE, air cleaner (TD-91) 1/2" NUT (2) 1/2" lock WASHER (2)
18	51 939 D	GASKET, air cleaner pipe flange (TD-91)
	251 227 R91	CLAMP, cylinder head breather tube hose (See NOTE) (will work for 274 085 R91)

AIR CLEANER PIPE EXTENSION
(T-61, TD-61 and TD-91)

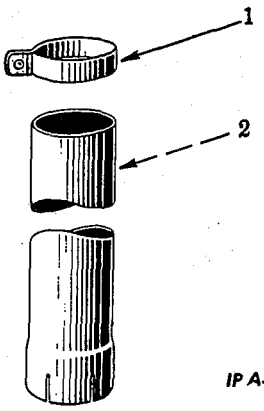

	275 292 R91	ATTACHMENT, air pipe extension (See NOTE)
1	31 790 DA	CLAMP, air pipe extension 3/8" NUT 3/8 x 1-3/4" hex-hd. cap SCREW 3/8" lock WASHER
2	275 293 R1	PIPE, extension air

REF. NO.	PART NUMBER	DESCRIPTION

AIR CLEANER AND CONNECTIONS
(Donaldson) (TD-61 and TD-91) - Continued

275 289 R92	CLEANER ASSEMBLY, air (Composed of - 1 BAFFLE 276 219 R91 1 BODY 276 212 R91 1 CLIP 276 218 R1 1 CUP 276 215 R91 1 GASKET 276 217 R1 2 ROD 276 216 R91 1 SCREEN 276 214 R91) 3/8NF x 3/4" hex-hd. cap SCREW (TD-61) (4) 3/8" lock WASHER (4) 13/32 x 13/16" x No. 16 ga. WASHER (4) 3/8NF x 1-1/8" hex-hd. cap SCREW (TD-91) (4)
251 226 R1	HOSE, cylinder head breather tube (See NOTE)
278 953 R91	NUT, cylinder head breather tube (See NOTE)
275 366 R2	TUBE, cylinder head to air cleaner breather (See NOTE) (TD-61)
275 255 R2	TUBE, cylinder head to air cleaner breather (See NOTE) (TD-91)

NOTE - Also listed under "Cylinder Head, Valve Cover, Valves and Starting Valve Mechanism" in Engine Section.

AIR PRE-CLEANER
(plastic Body) (Donaldson) (T-61, TD-61 and TD-91)

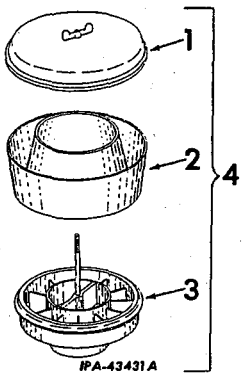

	275 774 R91	ATTACHMENT, pre-cleaner (collector type) (See NOTE)
1	365 412 R91	COVER (P-20648)
2	365 413 R1	BODY (P-20227)
3	365 415 R91	SLEEVE (P-20653)
4	365 262 R91	PRE-CLEANER (collector type (will work for 59 322 D) (H-236)

NOTE - Factory Application - Order on Machine Order Form.
Field Application - Order through Regular Service Parts Channels.

REF. NO.	PART NUMBER	DESCRIPTION

AIR PRE-CLEANER
(Glass Body) (Donaldson)

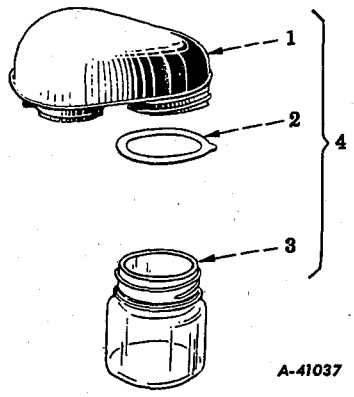

FUEL PUMP AND CONNECTIONS
(A. C. Spark Plug Co.) (T-61)

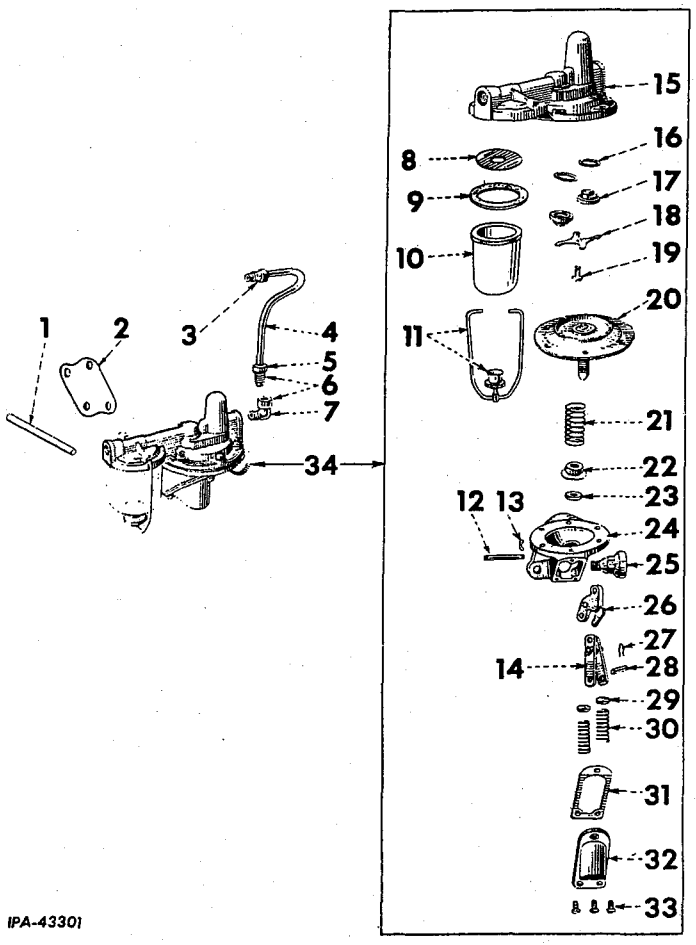

REF. NO.	PART NUMBER	DESCRIPTION

AIR PRE-CLEANER
(Glass Body) (Donaldson) - Continued

KEY TO UNITS

A -	277 208 R91	Attachment, air pre-cleaner (collector type) (used with equipment combination T-61 and TD-61) (See NOTE)
B -		Service Parts for Standard Units equipped with Glass Jar Pre-Cleaner (T-61, TD-61 and TD-91)
1	59 422 D	BODY (Unit A) (X1599)
1	59 421 D	BODY (Unit B) (X1593)
2	66 776 D	GASKET (Unit A and B) (P-3995)
3	54 082 D	JAR, dust (Unit A and B) (P-2776)
4	59 321 D	PRE-CLEANER (collector type) (Unit A) (X1599A)
4	59 322 D	PRE-CLEANER (collector type) (order 275 774 R91) (Unit B) (X1593A)

NOTE - Factory Application - Order on Machine order Form.
Field Application - Order through Regular Service Parts Channels.

FUEL PUMP AND CONNECTIONS
(A. C. Spark Plug Co.) (T-61) - Continued

REF. NO.	PART NUMBER	DESCRIPTION

FUEL PUMP AND CONNECTIONS
(A.C. Spark Plug Co.) (T-61) - Continued

1	49 442 D	ROD, fuel pump push
2	24 524 D	GASKET, mounting (fuel pump)
3	29 899 D	NUT, fuel pipe coupling (carburetor end)
4	50 187 D	PIPE, fuel (pump to carburetor)
5	29 899 D	NUT, fuel pump elbow
6	24 847 HX	ELBOW w/NUT, 29 899 D, fuel pump (pump end)
7	24 847 H	ELBOW, fuel pump
8	23 516 D	SCREEN, gas strainer (854009)
9	51 346 VA	GASKET, strainer bowl (854003)
10	85 066 R91	BOWL w/GASKET, strainer (5590156)
11	85 864 R92	BAIL, strainer (5590152)
12	36 350 D	PIN, rocker arm (1521289)
13	36 351 D	WASHER, rocker arm pin (1521288)
14	23 537 D	LINKAGE (855374) (2)
15	85 064 R91	COVER w/VALVE PLUG, top (5590177) No. 10NF x 5/8" fil-hd. SCREW (6) No. 10 lock WASHER (6)
16	59 995 D	GASKET, inlet and outlet valve (1521953) (2)
17	59 084 DA	VALVE, inlet and outlet (5591860) (2)
18	59 996 D	PLATE, valve cage (1523664)
19		SCREW, No. 10NF x 3/8" cd-pltd. slt-pan-hd. (valve plate)
20	85 063 R91	DIAPHRAGM w/pull ROD (5591871)
21	26 097 D	SPRING, oil seal gasket retainer (856309)
22	85 067 R1	RETAINER, oil seal gasket (5591947)
23	25 589 D	GASKET, oil seal (856307)
24	28 825 D	BODY (1521721)
25	39 624 HA	BREATHER (1521736)
26	28 824 D	ARM, rocker (1521745)
27	23 521 D	CLIP, link pin (855017) (4)
28	23 539 D	PIN, link (855016) (2)
29	23 541 D	CAP, rocker arm spring (855532) (2)
30	23 530 D	SPRING, diaphragm (855253)
30	23 530 D	SPRING, rocker arm (855253)
31	23 528 D	GASKET, bottom cover (855229)
32	23 527 D	COVER, bottom (855228)
33		SCREW, No. 10NF x 3/8" fil-hd. (bottom cover) (3)
34	355 008 R91	PUMP ASSEMBLY, fuel (A.C. Spark Plug Co.) (1539555) 5/16 x 1" hex-hd. cap SCREW (2) 5/16" lock WASHER (2)

REF. NO.	PART NUMBER	DESCRIPTION

CARBURETOR
INTERNATIONAL MODEL E-12, 1-1/4" UPDRAFT
(Gasoline or Distillate) (T-61)

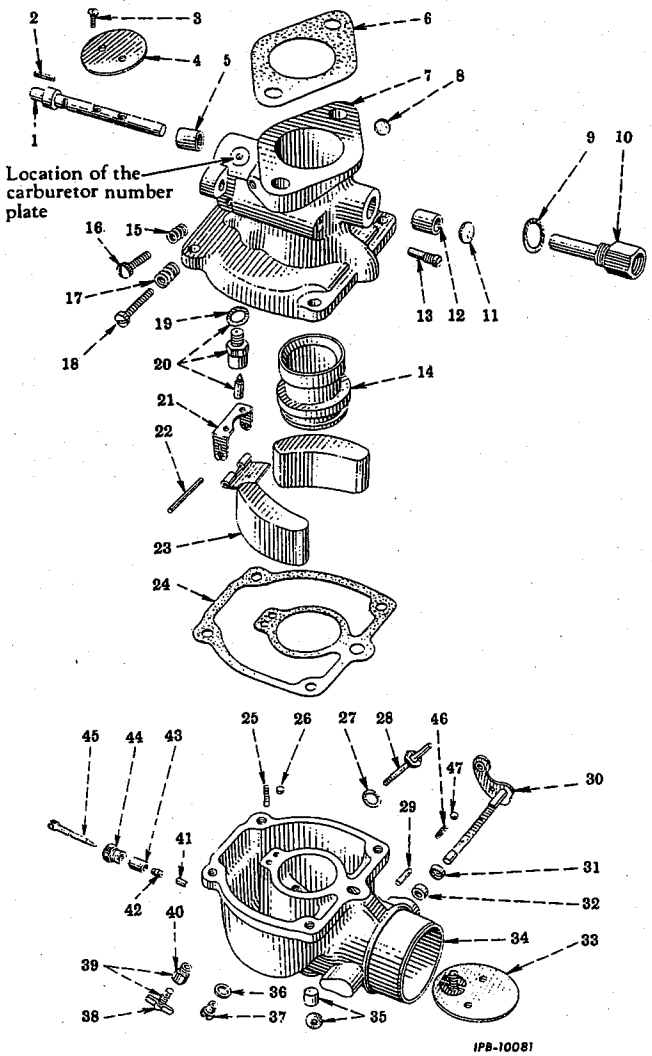

	53 914 DC	CARBURETOR ASSEMBLY (less reference No. 6) (distillate)
	365 583 R91	CARBURETOR ASSEMBLY (less reference No. 6) (gasoline)
1	54 488 DAX	SHAFT w/PIN and STOP, throttle (distillate)
1	362 529 R91	SHAFT w/PIN and STOP, throttle (gasoline)
2	45 110 D	PIN, throttle stop
3	47 392 D	SCREW, throttle butterfly (2)
4	47 391 D	BUTTERFLY, throttle
5	49 223 DA	BUSHING, throttle shaft (economizer) (distillate)
5	362 523 R1	BUSHING, left throttle shaft (economizer) (gasoline)
6	21 632 D	GASKET, carburetor

REF. NO.	PART NUMBER	DESCRIPTION
		CARBURETOR INTERNATIONAL MODEL E-12, 1-1/4" UPDRAFT (Gasoline or Distillate) (T-61) - Continued
7	8 867 DAX	BODY ASSEMBLY, throttle (distillate) (Composed of - §1 BODY 1 BUSHING 47 390 D 1 BUSHING 49 223 DA 1 PIN 45 110 D 1 PLUG 24 805 D §2 PLUG §2 PLUG 1 PLUG 57 956 D 1 SCREW 38 525 D)
7	362 522 R11	BODY ASSEMBLY, throttle (gasoline) (Composed of - §1 BODY 1 BUSHING 47 390 D 1 BUSHING 362 523 R1 1 PIN 45 110 D 1 PLUG 24 805 D §2 PLUG §2 PLUG 1 PLUG 57 956 D 1 SCREW 38 525 D)
8	24 805 D	PLUG, 3/8" expansion (throttle body)
9	18 377 D	GASKET, strainer screen retainer
10	29 902 DX	RETAINER w/SCREEN, strainer screen
11	57 956 D	PLUG, 7/16" throttle shaft expansion
12	47 390 D	BUSHING, throttle shaft
13	24 693 D	PLUG, idle outlet
14	47 407 D23	VENTURI (optional with 64 987 D23) (gasoline)
14	47 407 D27	VENTURI (optional with 64 987 D27) (distillate)
14	64 987 D27	VENTURI (optional with 47 407 D27) (distillate)
14	64 987 D23	VENTURI (optional with 47 407 D23) (gasoline)
15	24 685 D	SPRING, idle adjusting needle valve (distillate)
15	351 959 R1	SPRING, idle adjusting screw (gasoline)
16	24 689 D	VALVE, idle adjusting needle (distillate)
16	362 528 R1	SCREW, idle adjusting (gasoline)
17	25 484 D	RETAINER, idle throttle adjusting
18		SCREW, 10 x 1-1/8" fil-hd. cd-pltd.
19	25 948 D	GASKET, fuel valve seat
20	29 302 DX50	GAUGE w/GASKET, 25 948 D, needle valve
21	47 394 D	SUPPORT, float axle No. 4 x 5/16" cd-pltd. rd-hd. SCREW (2) No. 4 cd-pltd. lock WASHER (2)
22	47 395 D	PIVOT, float lever
23	47 398 DX	FLOAT
24	47 388 DA	GASKET, fuel bowl
25	49 798 D72	JET, idle metering (distillate)
25	49 798 D74	JET, idle metering (gasoline)
26	35 606 D53	BLEED, main air (gasoline)
26	35 606 D54	BLEED, main air (distillate)
27	47 401 D	GASKET, metering nozzle (distillate)
27	251 583 R1	GASKET, metering nozzle (gasoline)
28	47 400 DAX	NOZZLE, metering (distillate)
28	365 613 R1	NOZZLE, metering (gasoline)
29	142 484	PIN, 1/8 x 1/2" No. 1 groove (in fuel bowl) (optional with 351 588 R1)
29	351 588 R1	PIN, 1/8 x 1/2" No. 1 groove (in fuel bowl) (optional with 142 484)
30	365 610 R91	SHAFT w/LEVER, starting shutter (gasoline)
30	352 642 R91	SHAFT w/LEVER, starting shutter (distillate)

-48-

FUEL SYSTEM

REF. NO.	PART NUMBER	DESCRIPTION
		CARBURETOR INTERNATIONAL MODEL E-12, 1-1/4" UPDRAFT (Gasoline or Distillate) (T-61) - Continued
31	45 148 D	RETAINER, choke valve dust seal
32	45 149 DA	SEAL, choke valve dust
33	357 002 R12	SHUTTER, starting No. 6 x 1/4" rd-hd. SCREW (2) No. 6 cd-pltd. lock WASHER (2)
34	6 514 DBX	BOWL ASSEMBLY, fuel (distillate) (Composed of - 1 AIR BLEED 35 606 D54 §1 BOWL §1 FILLER 1 PIN 351 588 R1 §1 PLUG §1 PLUG 1 RETAINER 45 148 D 1 SEAL 45 149 DA 1 SEAT 45 141 DA53) 1/4 x 7/8" cd-pltd. hex. 1/4 x 7/8" cd-pltd. hex-hd. cap SCREW (4) 1/4" cd-pltd. lock WASHER (4)
34	365 609 R91	BOWL ASSEMBLY, fuel (gasoline) (Composed of - 1 AIR BLEED 35 606 D53 §1 BOWL §1 FILLER 1 PIN 351 588 R1 §1 PLUG §1 PLUG 1 RETAINER 45 148 D 1 SEAL 45 149 DA 1 SEAT 365 612 R1) PLUG, 1/8" sq-hd. cd-pltd. pipe 1/4 x 7/8" cd-pltd. hex-hd. cap SCREW (4) 1/4" cd-pltd. lock WASHER (4)
	117 243	
35	60 947 D	FILLER and PLUG, drip hole
36	32 615 D	GASKET, metering nozzle clamp nut (distillate)
37	47 402 D	NUT, metering nozzle clamp (distillate)
38	67 942 D	BODY, drain cock (used with 9 983 TC) (distillate)
39	9 983 TC	COCK, drain (composed of BODY, 67 942 D and STEM, 64 536 DA) (distillate) (optional with 26 407 D or 134 519)
39	134 519	COCK, drain (distillate) (optional with 9 983 TC or 26 407 D)
39	26 407 D	COCK, drain (distillate) (optional with 9 983 TC or 134 519)
40	64 536 DA	STEM, drain cock (used with 9 983 TC) (distillate)
41	365 612 R1	SEAT, main metering needle valve (gasoline)
42	45 141 DA53	SEAT, main metering needle valve (distillate)
43	24 703 DA	PACKING, fuel adjusting screw (optional with 67 266 DX)
43	67 266 DX	PACKING, fuel adjusting screw (optional with 24 703 DA)
44	24 687 DA	NUT, main metering needle valve packing (distillate)
45	47 404 DA	SCREW, fuel adjusting
46	46 059 D	SPRING, starting shutter friction
47	52 791 R1	BALL, 3/16" stainless stl.
	38 525 D	SCREW, number plate drive
		§ - Not Furnished Separately

FUEL SYSTEM

REF. NO.	PART NUMBER	DESCRIPTION

CARBURETOR
(For Starting on Gasoline) (TD-61 and TD-91)

-49-

FUEL SYSTEM

REF. NO. | PART NUMBER | DESCRIPTION

CARBURETOR
(For Starting on Gasoline) (TD-61 and TD-91) - Continued

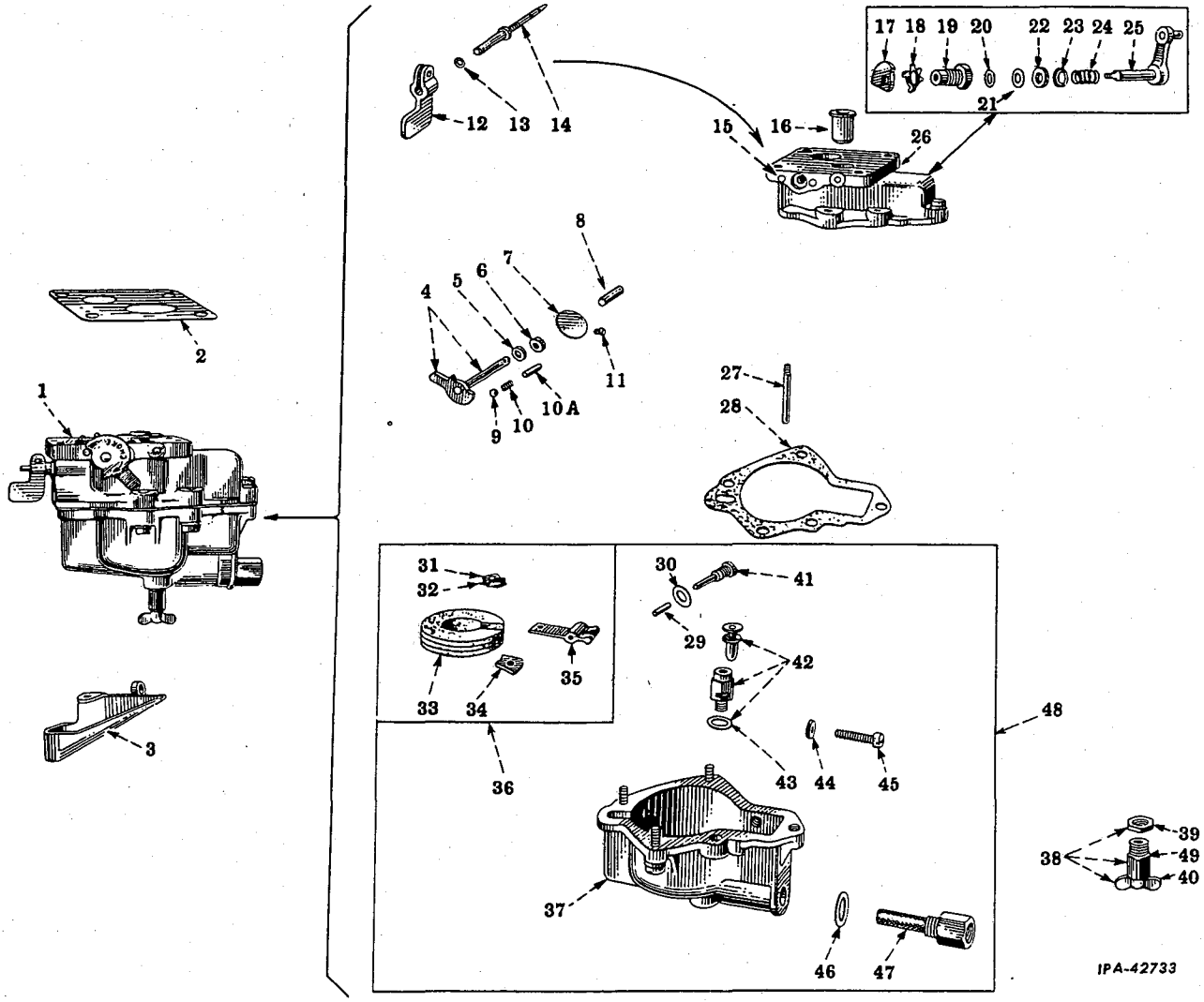

1	275 711 R91	CARBURETOR
1	275 801 R91	CARBURETOR (TD-61) 5/16NF NUT (4) 5/16" lock WASHER (4)
2	53 459 DA	GASKET, carburetor
3	58 843 DX	TROUGH w/SUPPORT and CLIP, drain
4	365 389 R91	SHAFT w/LEVER, starting shutter
5	45 148 D	RETAINER, dust seal
6	45 149 DA	SEAL, dust
7	362 551 R1	CHOKE
8	25 969 DB	SHAFT, starting shutter (short)
9	52 791 R1	BALL, 3/16" friction spring
10	46 059 D	SPRING, starting lever friction
10A	18 543 R1	PIN, 7/32 x 1" roll
11	31 636 D	SCREW, starting shutter (2)
12	362 550 R1	LEVER, fuel adjustment No. 8 x 1/2" rd-hd. SCREW
13	360 599 R1	"O" RING (3/16 x 5/16 x 1/16")
14	362 549 R1	VALVE, needle
15	45 110 D	PIN, starting lever stop (2)
16	362 545 R1	VENTURI (TD-61)
16	362 546 R1	VENTURI (TD-91)

PRINTED IN UNITED STATES OF AMERICA

REF. NO.	PART NUMBER	DESCRIPTION
		CARBURETOR (For Starting on Gasoline) (TD-61 and TD-91) - Continued
17	32 582 D	CAM, locking shaft
18	352 352 R1	LOCK, locking shaft bearing
19	51 735 D	BEARING, locking shaft
20	359 158 R1	"O" RING, locking shaft (19/64 x 27/64 x 1/16")
21	363 454 R1	WASHER, locking shaft
22	32 588 D	WASHER, locking shaft dust
23	32 587 D	RETAINER, locking shaft dust washer
24	32 586 D	SPRING, locking shaft dust washer
25	51 732 D	SHAFT and LEVER, locking No. 8 cd-pltd. NUT No. 8 cd-pltd. lock WASHER
26	363 315 R92	BODY ASSEMBLY, carburetor (TD-61) (Composed of - §1 BODY 1 PIN 18 543 R1 2 PIN 45 110 D 1 PLUG 61 142 DM 1 RETAINER 45 148 D 1 SEAL 45 149 DA 1 VENTURI 362 545 R1)
26	363 316 R92	BODY ASSEMBLY, carburetor (TD-91) (Composed of - §1 BODY 1 PIN 18 543 R1 2 PIN 45 110 D 1 PLUG 61 142 DM 1 RETAINER 45 148 D 1 SEAL 45 149 DA 1 VENTURI 362 546 R1)
27	362 552 R1	TUBE, fuel inlet
28	32 606 DB	GASKET, fuel bowl
29	32 604 D	SPACER, float lever
30	25 948 D	GASKET, float lever pivot screw
31	32 578 D	LEAF, upper float lever spring
32	32 577 D	LEAF, lower float lever spring
33	251 650 R11	FLOAT and FERRULE
34		NUT, float reinforcing No. 4 (brass) No. 4 x 1/2" slt-rd-hd. SCREW
35	357 090 R1	LEVER, float (aluminum)
36	251 652 R91	FLOAT and LEVER ASSEMBLY (Composed of - 1 FLOAT 251 650 R11 1 LEAF, lower 32 577 D 1 LEAF, upper 32 578 D 1 LEVER 357 090 R1)
37	5 051 DX	BOWL w/SPACER, 32 604 D, fuel (optional with 9 390 DX)
37	9 390 DX	BOWL w/SPACER, 32 604 D, fuel (optional with 5 051 DX) No. 12 cd-pltd. lock WASHER (5) No. 12 x 7/8" cd-pltd. fil-hd. SCREW
38	58 840 DAX	VALVE w/LOCKNUT, 58 837 D, BODY, 64 932 D and STEM, 64 536 DA, drain

REF. NO.	PART NUMBER	DESCRIPTION
		CARBURETOR (For Starting on Gasoline) (TD-61 and TD-91) - Continued
39	58 837 D	LOCKNUT, drain valve
40	64 536 DA	STEM, drain valve
41	32 576 DX	PIVOT and SCREW, float
42	32 581 DXB	VALVE and CAGE w/GASKET, 25 948 D, needle
43	25 948 D	GASKET, needle valve cage
44		Follows Reference No. 37
45		Follows Reference No. 37
46	18 377 D	GASKET, strainer screen
47	29 902 DX	RETAINER w/SCREEN, strainer screw
48	35 691 DA	BOWL ASSEMBLY, fuel (Composed of - 1 BOWL w/SPACER 5 051 DX 1 FLOAT and LEVER 251 652 R91 1 GASKET 18 377 D 1 GASKET 25 948 D 1 PIVOT and SCREW 32 576 DX 1 RETAINER w/SCREEN 29 902 DX 1 VALVE and CAGE w/GASKET 32 581 DXB)
49	64 932 D	BODY, drain valve
	37 006 D	BLANK, carburetor number plate
	61 142 DM	PLUG, starting shutter shaft
	38 525 D	SCREW, No. 0 x 3/16" drive (name plate) SCREW, No. 8 x 3/8" slt-fil-hd.

§ - Not Furnished Separately

FUEL AND GASOLINE TANKS, PIPING AND GASOLINE STRAINER (*)
(T-61 and TD-61)

-51-

FUEL SYSTEM

FUEL AND GASOLINE TANKS, PIPING AND GASOLINE STRAINER (*)
(T-61 and TD-61) - Continued

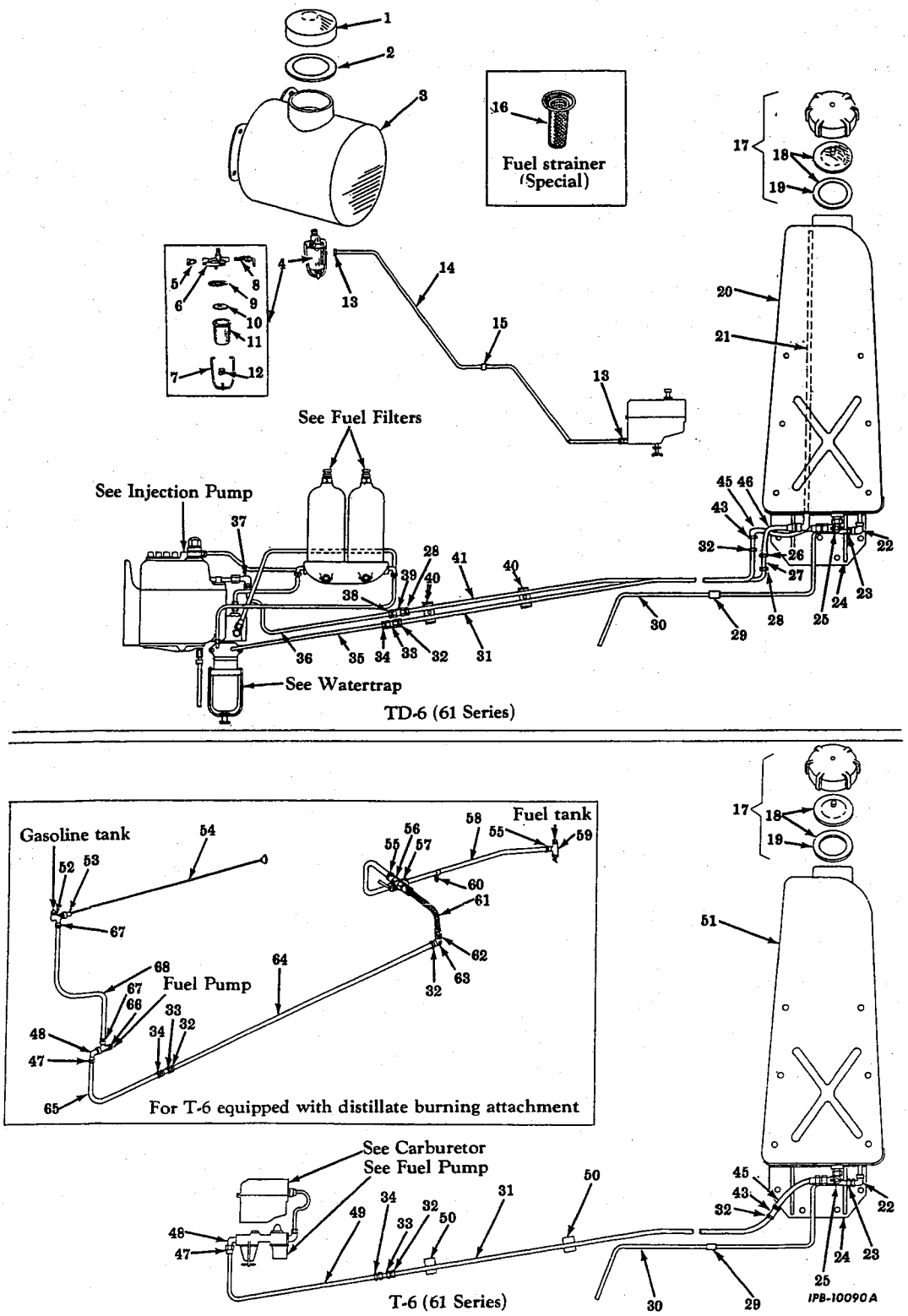

PRINTED IN UNITED STATES OF AMERICA

FUEL SYSTEM

REF. NO.	PART NUMBER	DESCRIPTION

FUEL AND GASOLINE TANKS, PIPING AND GASOLINE STRAINER (*)
(T-61 and TD-61) - Continued

(X) - KEY TO UNITS
A - Fuel and Gasoline Tanks and Piping for TD-61
B - Fuel and Gasoline Tanks and Piping for T-61

(X) - Letters of these units correspond with those shown following the description of the parts in the list below and identifies the unit for which the part is used. Items without letters after the description indicates the part is used for all units.

REF. NO.	PART NUMBER	DESCRIPTION
1	23 995 DC	CAP w/GASKET, 23 977 DB, gasoline tank filler (distillate burning attachment)
2	23 977 DB	GASKET, gasoline tank filler cap (distillate burning attachment)
3	46 308 DBXB	TANK w/CAP, 23 995 DC, gasoline (distillate burning attachment) 3/8 x 2-1/4" hex-hd. cap SCREW (4 for Unit B) 3/8 x 3/4" hex-hd. cap SCREW (4 for Unit A) 3/8" lock WASHER (4 for Units A and B)
4 to 12		See Gasoline Strainer
13	29 899 D	NUT, gasoline tube coupling (2 for Unit B)
14	276 450 R11	TUBE w/two NUTS, 29 899 D, gasoline (gasoline tank to carburetor) (Unit A)
15	263 515 R91	CLIP, gasoline tube 5/16 x 5/8" hex-hd. cap SCREW 5/16" lock WASHER
16	266 337 R91	STRAINER w/GASKET, 303 962 R1 (See NOTE)
17	259 939 R91	CAP w/BAFFLE and GASKET, 259 937 R11, fuel tank filler
18	259 937 R11	BAFFLE w/GASKET, 251 825 R2, fuel tank filler cap 9/32 x 5/8" x No. 16 ga. WASHER
19	251 825 R2	GASKET, fuel tank filler cap
20	275 163 R91	TANK ASSEMBLY, fuel (Unit A) (Composed of - 1 CAP 259 939 R91 1 PIPE 275 155 R11 1 PLUG 103 868 §1 TANK) 1/2 x 1-1/4" hex-hd. cap SCREW (6) 1/2" lock WASHER (6)
21	42 384 DXA	PIPE w/ELBOW, fuel return stand (Unit A)
22	67 869 D	ELBOW, fuel tank overflow tube
23	29 898 D	NUT, coupling
24	275 321 R11	BRACKET, fuel tank support (2)
25	53 953 D	VALVE, fuel shut-off (not distillate burning attachment)
27	276 585 R1	ADAPTER, fuel return tube center (TD-61 39383 up) (Unit A)
28	37 165 D	NUT, coupling (2 for Unit A)
29	61 387 D	CLIP, fuel tank overflow tube
30	275 373 R11	TUBE w/NUT, 29 898 D, fuel tank overflow

FUEL SYSTEM

REF. NO.	PART NUMBER	DESCRIPTION

FUEL AND GASOLINE TANKS, PIPING AND GASOLINE STRAINER (*)
(T-61 and TD-61) - Continued

REF. NO.	PART NUMBER	DESCRIPTION
31	276 814 R11	TUBE w/two NUTS, 37 165 D, fuel center (together with ADAPTER, 276 584 R1 will work for 275 322 R11) (not distillate burning attachment)
32	37 165 D	NUT, coupling (2)
33	55 999 D	UNION, fuel tube
33	55 999 DX	UNION, 55 999 D, w/two NUTS, 37 165 D, fuel tube
34	37 165 D	NUT, coupling (2 for Unit A)
34	37 165 D	NUT, coupling (Unit B)
35	275 324 R11	TUBE w/two NUTS, 37 165 D, front fuel (Unit A)
36	275 342 R11	TUBE w/two NUTS, 37 165 D, front fuel return (Unit A)
37	37 323 DX	ELBOW, return tube (pump end) (Unit A)
38	37 165 D	NUT, coupling (2 for Unit A)
39	55 999 DX	UNION, 55 999 D, w/two NUTS, 37 165 D, fuel return tube (Unit A)
40	42 385 D	CLAMP, fuel pipe (3 for Unit A) 3/8" NUT (2) 3/8 x 1-3/4" hex-hd. cap SCREW (2) 3/8" lock WASHER (2)
41	276 814 R11	TUBE w/two NUTS, 37 165 D, center fuel return (together with ADAPTER, 276 585 R1) (will work for 275 331 R11) (Unit A)
43	276 584 R1	ADAPTER, fuel tube (TD-61 39383 up)
45	61 248 D	TUBE, rear fuel (not distillate burning attachment)
46	28 899 DB	TUBE, rear fuel return (Unit A)
47	37 165 D	NUT, coupling (Unit B)
48	37 167 DX	ELBOW w/NUT, 36 175 D, fuel tube (Unit B)
49	275 323 R11	TUBE w/NUT, 37 165 D, fuel front (Not distillate burning attachment) (Unit B)
50	50 149 D	CLAMP, fuel tube (2 for Unit B) 3/8" NUT (2) 3/8 x 1-3/4" hex-hd. cap SCREW (2) 3/8" lock WASHER (2)
51	275 330 R91	TANK ASSEMBLY, fuel (Unit B) (Composed of - 1 CAP 259 939 R91 1 PLUG 103 866 1 PLUG 103 868 §1 TANK) 103 866 PLUG, 1/4" sq-hd. C.I. pipe 1/2 x 1-1/4" hex-hd. cap SCREW (6) 1/2" lock WASHER (6)
52	50 500 DAX	VALVE w/NUT, 29 899 D, gasoline shut-off (†)
53	51 933 D	COUPLING, gasoline shut-off valve control rod (†) (Unit B) 3/32 x 1" cotter PIN (2)

(*) - Piping for Engine refer to "Pipes, Gear and Connections"
(†) - Distillate Burning Attachment Only
NOTE - Factory Application - Order on Machine Order Form.
Field Application - Order through Regular Service Parts Channels.
§ - Not Furnished Separately.

REF. NO.	PART NUMBER	DESCRIPTION
		FUEL AND GASOLINE TANKS, PIPING AND GASOLINE STRAINER (*) (T-61 and TD-61) - Continued
54	276 344 R91	ROD, gasoline shut-off valve control (†) (Unit B)
55	37 165 D	NUT, coupling (2 for Unit B)
56	38 026 DM	CONNECTOR, fuel tank to valve tube (†) (Unit B)
57	276 347 R91	VALVE, fuel tube shut-off, 1/4 x 1/4" (Imperial Brass No. 204HD) (†) (Unit B) 1/4NF NUT (2) 1/4NF x 5/8" hex-hd. cap SCREW (2) 1/4" lock WASHER (2)
58	276 345 R11	TUBE w/two NUTS, 37 165 D, fuel tank to valve (†) (Unit B)
59	56 998 DA	VALVE, fuel tank shut-off (†) (Unit B)
60	276 346 R1	CLIP, fuel tube (†) (Unit B) 3/8NF NUT 3/8NF x 7/8" hex-hd. cap SCREW 3/8" lock WASHER
61	276 348 R91	TUBE, fuel flexible shut-off valve to fuel tube, center (Aeroquip No. 1390-6-1075) (†) (Unit B)
62	276 349 R1	ADAPTER, flexible fuel tube (Aeroquip No. 2001-4-6) (†) (Unit B)
63	37 323 D	ELBOW, pipe (†) (Unit B)
64	276 381 R11	TUBE w/two NUTS, 37 165 D, center fuel (†) (Unit B)
65	277 068 R11	TUBE w/NUT, 37 165 D, front fuel (†) (Unit B)
66	19 255 R1	UNION w/two NUTS, 29 899 D, tee (†) (Unit B)
67	29 899 D	NUT, gasoline tank to strainer tube coupling (†) (2 for Unit B)
68	276 343 R11	TUBE w/two NUTS, 29 899 D, gasoline tank to strainer (†) (Unit B)
	275 844 R1	CLAMP, fuel tube (TD-61 38951 to 39382) 3/8 x 1-1/4" hex-hd. cap SCREW 3/8" lock WASHER
	38 026 DM	CONNECTOR, fuel return tube (TD-61 38951 to 39382) (Unit A)
	38 026 DM	CONNECTOR, fuel tube (used with TUBE, 275 331 R11)
	48 233 D	ELBOW, fuel return tube (TD-61 38951 to 39382) (Unit A)
	48 232 D	ELBOW, fuel tube (used with TUBE, 275 331 R11)
	303 962 R1	GASKET, fuel strainer
	103 868	PLUG, 1/2" sq-hd. fuel tank drain
	276 342 R1	SPACER, gasoline tank (†) (2 for Unit B)

(†) - Distillate Burning Attachment Only
(*) - Piping for Engine refer to "Pipes, Gear and Connections"
§ - Not Furnished Separately

REF. NO.	PART NUMBER	DESCRIPTION
		GASOLINE STRAINER (*) (T-61 and TD-61)
4	51 966 DCX	STRAINER ASSEMBLY, gasoline (Imperial Brass Manufacturing Co.) (44788) (Composed of - 1 BAIL 17 564 D 1 BODY 259 402 R91 1 BOWL 357 957 R1 1 CUP 17 565 DA 1 GASKET 355 888 R1 1 NUT 29 899 D 1 SCREEN 13 194 D 1 STEM 259 403 R91)
5	29 899 D	NUT, coupling (strainer outlet) (for 5/16" OD tubing) (81-L)
6	259 402 R91	BODY w/BAFFLE, strainer (44788-2)
7	17 564 D	BAIL (26984-C)
8	259 403 R91	STEM (44801-7)
9	355 888 R1	GASKET, strainer (44801-3)
10	13 194 D	SCREEN, strainer (25854)
11	357 957 R1	BOWL, strainer (44801-4)
12	17 565 DA	NUT and CUP (27208-F)

(*) - Piping for Engine refer to "Pipes, Gear and Connections"

FUEL SYSTEM

REF. NO.	PART NUMBER	DESCRIPTION

FUEL AND GASOLINE TANKS, PIPING AND GASOLINE STRAINER (*)
(TD-91)

-54-

FUEL SYSTEM

REF. NO.	PART NUMBER	DESCRIPTION

FUEL AND GASOLINE TANKS, PIPING AND GASOLINE STRAINER (*)
(TD-91) - Continued

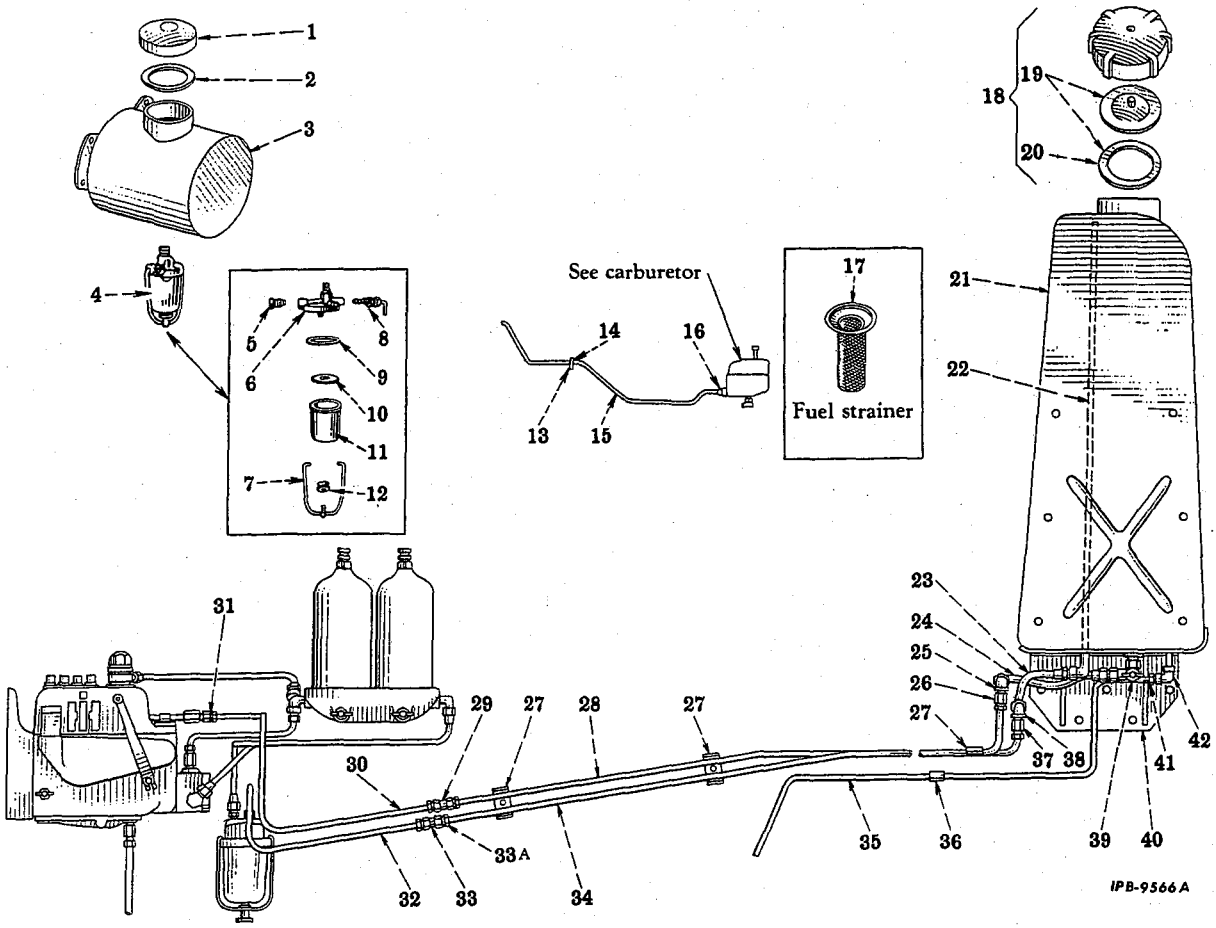

1	23 995 DC	CAP w/GASKET, 23 977 DB, gasoline tank filler
2	23 977 DB	GASKET, gasoline tank filler cap
3	46 308 DBXB	TANK w/CAP, 23 995 DC, gasoline 3/8 x 3/4" hex-hd. cap SCREW (4) 3/8" lock WASHER (4)
4 to 12		See Gasoline Strainer
13	264 689 R1	CLIP, gasoline tube (will work for 57 296 D or 264 196 R91)
14	26 242 D	FELT, gasoline tube clip (order 264 689 R1)
15	276 068 R11	TUBE w/two NUTS, 29 899 D, gasoline (gasoline tank to carburetor)
16	29 899 D	NUT, gasoline tube to carburetor coupling (2)
17	266 337 R91	STRAINER w/GASKET, 303 926 R1, fuel (See NOTE)
18	259 939 R91	CAP w/BAFFLE and GASKET, 259 937 R11, fuel tank filler
19	259 937 R11	BAFFLE w/GASKET, 251 825 R2, fuel tank filler cap 9/32 x 5/8" x No. 16 ga. WASHER
20	251 825 R2	GASKET, fuel tank filler cap
21	275 163 R91	TANK ASSEMBLY, fuel (Composed of - 1 CAP 259 939 R91 1 PIPE 42 384 DXA 1 PLUG 103 868 §1 TANK) 1/2 x 1-1/4" hex-hd. cap SCREW (6) 1/2" lock WASHER (6)
22	42 384 DXA	PIPE, fuel return stand (will work for 275 155 R11)
23	28 899 DB	TUBE, rear fuel return

(*) - Piping for Engine refer to "Pipes, Gear and Connections"
NOTE - Factory Application - Order on Machine Order Form.
Field Application - Order through Regular Service Parts Channels.
§ - Not Furnished Separately

PRINTED IN UNITED STATES OF AMERICA

FUEL SYSTEM

REF. NO.	PART NUMBER	DESCRIPTION
		FUEL AND GASOLINE TANKS, PIPING AND GASOLINE STRAINER (*) (TD-91) - Continued
24	61 248 D	TUBE, rear fuel
25	48 232 D	ELBOW, fuel tube
26	38 026 DM	CONNECTOR, fuel tube
27	42 385 D	CLAMP, fuel pipe (4) 3/8" NUT (2) 3/8 x 1-3/4" hex-hd. cap SCREW (2) 3/8 x 1-1/2" hex-hd. cap SCREW 3/8" lock WASHER (3)
28	275 167 R2	TUBE, center fuel return (together w/two NUT, 278 953 R91 will work for 275 167 R11)
29	55 999 D	UNION, fuel return tube
30	278 021 R2	TUBE, front fuel return (together with CONNECTOR, 28 026 DM and two NUT, 278 953 R91 will work for 275 166 R11)
31	37 323 D	ELBOW, fuel return tube (pump end) (TD-91 60301 to 64432)
31	38 026 DM	CONNECTOR, fuel return tube (pump end) (TD-91 64433 up)
32	278 020 R2	TUBE, front fuel (together with CONNECTOR 38 026 DM and two NUT, 278 953 R91) (will work for 275 165 R11)
33	55 999 D	UNION, fuel tube
33A	278 953 R91	NUT, fuel tube coupling (8)
34	275 164 R2	TUBE, center fuel (together w/two NUT, 278 953 R91 will work for 275 164 R11)
35	275 168 R11	TUBE w/NUT, 29 898 D, fuel tank overflow
36	61 387 D	CLIP, fuel tank overflow tube
37	38 026 DM	CONNECTOR, fuel return tube (tank end)
38	48 233 D	ELBOW, fuel return tube
39	53 953 D	VALVE, fuel shut-off
40	275 159 R11	BRACKET, fuel tank support (2)
41	29 898 D	NUT, fuel tank overflow tube coupling
42	67 869 D	ELBOW, fuel tank overflow tube
	51 434 D	ELBOW, fuel tube inlet pipe (in water trap) (used with TUBE, 275 165 R11) (TD-91 60301 to 64432)
	38 026 DM	CONNECTOR, fuel tube inlet pipe (in water trap) (used with 278 020 R2) (TD-91 64433 up)
	303 926 R1	GASKET, fuel strainer
	103 868	PLUG, 1/2" sq-hd. fuel tank drain

-55-

FUEL SYSTEM

REF. NO.	PART NUMBER	DESCRIPTION
		GASOLINE STRAINER (*) (TD-91)
4	51 066 DCX	STRAINER ASSEMBLY, gasoline (Imperial Brass Manufacturing Co.) (44788) (Composed of - 1 BAIL 17 564 D 1 BODY 259 402 R91 1 BOWL 357 957 R1 1 CUP 17 565 DA 1 GASKET 355 888 R1 1 NUT 29 899 D 1 SCREEN 13 194 D 1 STEM 259 403 R91)
5	29 899 D	NUT, coupling (strainer outlet) (for 5/16" OD tubing) (81-L)
6	259 402 R91	BODY w/BAFFLE, strainer (44788-2)
7	17 564 D	BAIL (26984-C)
8	250 403 R91	STEM (44801-7)
9	355 888 R1	GASKET, strainer (44801-3)
10	13 194 D	SCREEN, strainer (25854)
11	357 957 R1	BOWL, strainer (44801-4)
12	17 565 DA	NUT and CUP (27208-F)

(*) - Piping for Engine refer to "Pipes, Gear and Connections"

REF. NO.	PART NUMBER	DESCRIPTION

FUEL INJECTION PUMP, PIPES, GEAR AND CONNECTIONS (See NOTE)
(For Engines equipped with IH Fuel Injection Pump)
(TD-61)

-56-

FUEL SYSTEM

REF. NO.	PART NUMBER	DESCRIPTION

FUEL INJECTION PUMP, PIPES, GEAR AND CONNECTIONS (See NOTE)
(For Engines equipped with IH Fuel Injection Pump)
(TD-61) - Continued

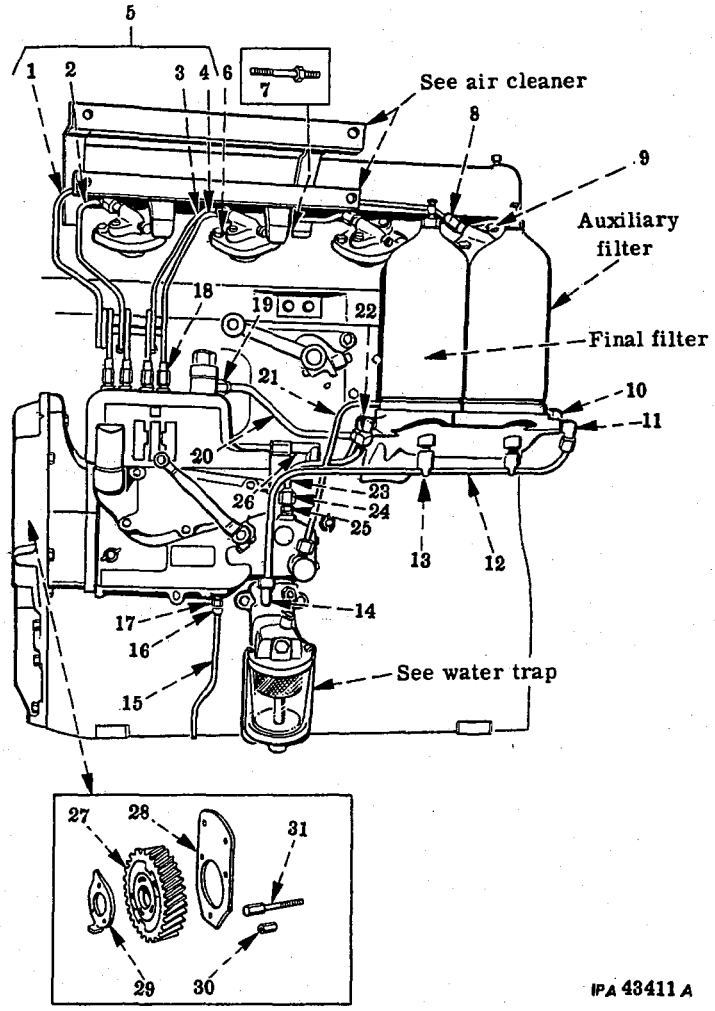

IPA 43411 A

1	275 806 R11	PIPE ASSEMBLY, injection (cylinder No. 1) (Composed of -		
		1	NUT	250 617 R1
		1	NUT	251 050 R2
		§1	PIPE	
		2	SLEEVE	250 610 R2)
2	275 807 R11	PIPE ASSEMBLY, injection (cylinder No. 2) (Composed of -		
		1	NUT	250 617 R1
		1	NUT	251 050 R2
		§1	PIPE	
		2	SLEEVE	250 610 R2)
3	275 808 R11	PIPE ASSEMBLY, injection (cylinder No. 3) (Composed of -		
		1	NUT	250 617 R1
		1	NUT	251 050 R2
		§1	PIPE	
		2	SLEEVE	250 610 R2)
4	275 809 R11	PIPE ASSEMBLY, injection (cylinder No. 4) (Composed of -		
		1	NUT	250 617 R1
		1	NUT	251 050 R2
		§1	PIPE	
		2	SLEEVE	250 610 R2)
5	275 810 R91	PIPE SET, injection (Composed of -		
		1	PIPE	275 806 R11
		1	PIPE	275 807 R11
		1	PIPE	275 808 R11
		1	PIPE	275 809 R11)
6	277 232 R11	SCREW, nozzle body cap (TD-61M - 1404 up) (6)		
6	275 904 R1	SCREW, nozzle body cap (TD-61M - 501 to 1403) (6)		

NOTE - Refer to "Fuel and Gasoline Tanks" for Piping
§ - Not Furnished Separately

PRINTED IN UNITED STATES OF AMERICA

FUEL SYSTEM

REF. NO.	PART NUMBER	DESCRIPTION
		FUEL INJECTION PUMP, PIPES, GEAR AND CONNECTIONS (See NOTE) (For Engines equipped with IH Fuel Injection Pump) (TD-61) - Continued
7	275 805 R1	SCREW, nozzle body cap (long) (TD-61M - 501 to 1403) (2)
7	277 233 R1	SCREW, nozzle body cap (long) (TD-61M - 1404 up) (2)
8	250 617 R1	NUT, injection pipe (nozzle end) (4)
9		NOZZLE INJECTION (refer to "injection nozzle and pre-combustion chamber")
10	22 510 D	ELBOW, auxiliary fuel filter outlet pipe (filter end)
11	22 510 D	ELBOW, auxiliary fuel filter inlet pipe (filter end)
12	264 341 R21	PIPE w/two NUT, 22 508 D and two NIPPLE, 22 509 D, auxiliary fuel filter inlet (TD-61M 501 to 1881)
12	278 574 R11	PIPE w/two NUT, 22 508 D and two NIPPLE, 22 509 D, auxiliary fuel filter inlet (TD-61M 1882 up)
13	9 982 T	VALVE, drain fuel oil filter (2)
14	65 486 D	ELBOW, auxiliary fuel filter inlet pipe (water trap end)
15	270 691 R21	PIPE w/NUT, 29 898 D, plunger drain
16	29 898 D	NUT, connector plunger drain pipe
17	29 901 D	CONNECTOR, plunger drain pipe
18	251 050 R2	NUT, injection pipe (pump end) (4)
19	37 165 D	NUT, final fuel filter outlet pipe (pump end)
20	62 959 DCX	PIPE w/two NUT, 37 165 D, final fuel filter outlet
21	264 340 R11	PIPE w/two NUT, 22 508 D and two NIPPLE, 22 509 D, auxiliary fuel filter outlet
22	22 510 D	ELBOW, final fuel filter inlet pipe (filter end)
23	271 142 R21	PIPE w/two NUT, 22 508 D and two NIPPLE, 22 509 D, final fuel filter inlet
24	22 508 D	NUT, final fuel filter inlet pipe (pump end)
25	22 507 D	CONNECTOR, final fuel filter inlet pipe (pump end)
26	50 607 D	ELBOW, fuel return tube
27	8 231 DB	GEAR, injection pump
28	62 939 DB	GASKET, injection pump
29	46 584 D	INDICATOR, injection pump gear timing 3/7NF x 1" hex-hd. mach. SCREW (3)
30	260 623 R1	NUT, injection pump mounting stud
31	16 849 R91	SCREW w/external-tooth lock WASHER, 3/8 x 2-1/2" hex-hd. mach.
	272 424 R1	CLIP, plunger drain pipe
	38 026 DM	CONNECTOR, iron pipe to water trap
	37 323 D	ELBOW, final fuel filter outlet pipe (filter end) (TD-61-M - 501 to 2185)

FUEL SYSTEM

REF. NO.	PART NUMBER	DESCRIPTION
		FUEL INJECTION PUMP, PIPES, GEAR AND CONNECTIONS (See NOTE) (For Engines equipped with IH Fuel Injection Pump) TD-61) - Continued
	22 509 D	NIPPLE, auxiliary fuel filter inlet and outlet pipe (4)
	22 509 D	NIPPLE, final fuel filter inlet pipe (2)
	22 508 D	NUT, auxiliary fuel filter inlet and outlet pipe (4)
	37 165 D	NUT, fuel return tube elbow
	22 508 D	NUT, final fuel filter inlet pipe (filter end)
	37 165 D	NUT, final fuel filter outlet pipe (filter end)
	29 898 D	NUT, hi-duty tee union (filter end) (TD-61-M - 2186 up)
	37 165 D	NUT, hi-duty tee union (filter end) (TD-61-M - 2186 up)
	258 995 R1	PLUG, pressure gauge hole (TD-61-M 2186 up)
	250 610 R2	SLEEVE, injection pipe (8)
	278 900 R1	TEE, union hi-duty (filter end) (TD-61-M 2186 up)
		I H SINGLE PLUNGER INJECTION PUMP
	270 021 R91	PUMP, Model "B" IH fuel injection, assembly (50 H.P. - 1550 R.P.M. - 9% regulation) ①

① - Refer to - Injection Pump Parts Catalog, PU-40A when ordering detail parts for complete injection pumps and also for special injection pumps not listed above. For speed charts see Injection Pump Parts Catalog, PU-40A.

NOTE - Refer to "Fuel and Gasoline Tanks" for Piping

REF. NO.	PART NUMBER	DESCRIPTION

FUEL INJECTION PUMP, PIPES, GEAR AND CONNECTIONS (*)
(TD-91) (For Engines equipped with IH Fuel Injection Pump)
(Standard)

-58-

FUEL SYSTEM

REF. NO.	PART NUMBER	DESCRIPTION

FUEL INJECTION PUMP, PIPES, GEAR AND CONNECTIONS (*)
(TD-91) (For Engines equipped with IH Fuel Injection Pump)
(Standard) - Continued

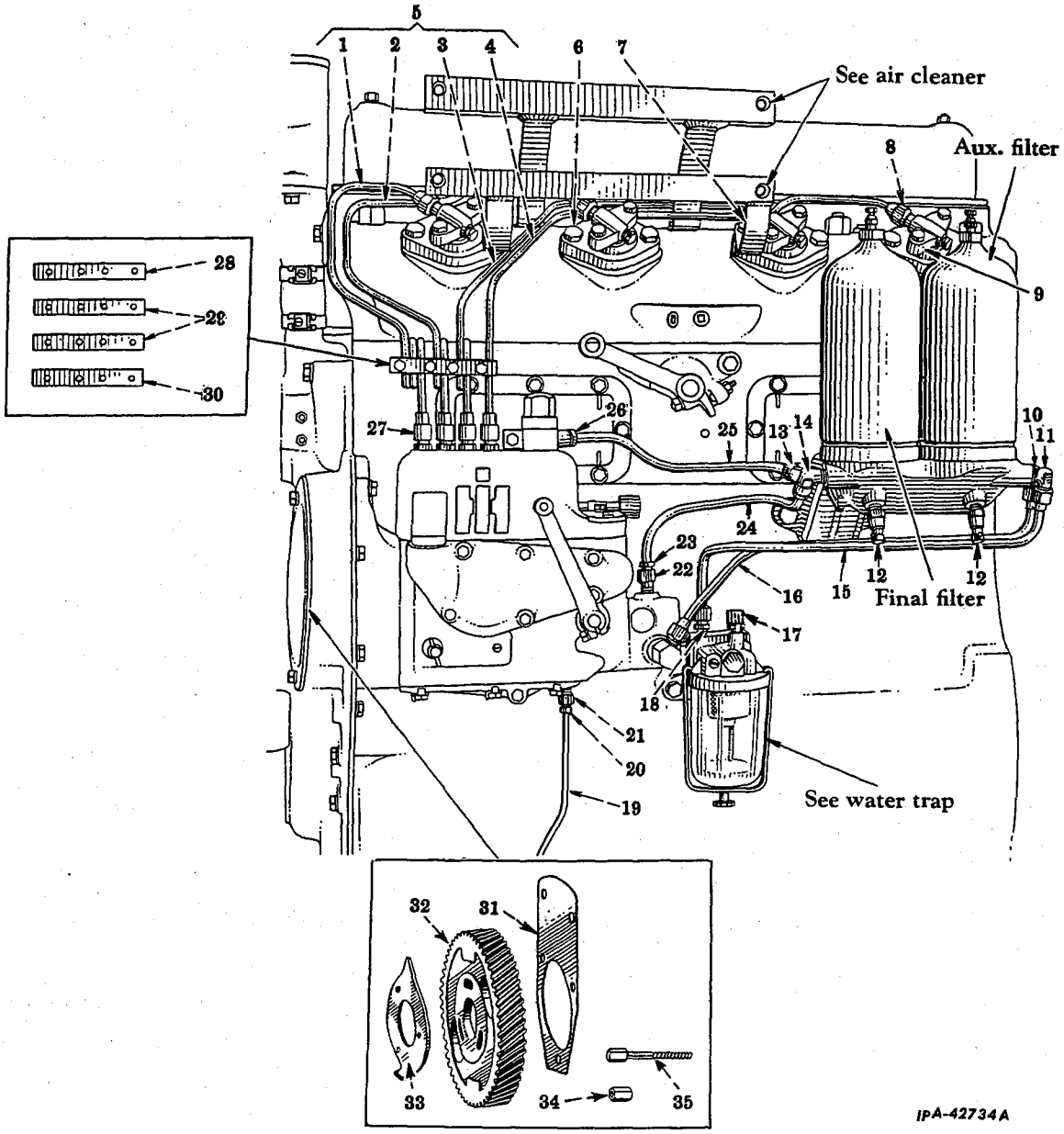

1	275 637 R11	PIPE ASSEMBLY, injection (cylinder No. 1)		
		(Composed of -		
		1	NUT	250 617 R1
		1	NUT	251 050 R2
		§1	PIPE	
		2	SLEEVE	250 610 R2)
2	275 638 R11	PIPE ASSEMBLY, injection (cylinder No. 2)		
		(Composed of -		
		1	NUT	250 617 R1
		1	NUT	251 050 R2
		§1	PIPE	
		2	SLEEVE	250 610 R2)
3	275 639 R11	PIPE ASSEMBLY, injection (cylinder No. 3)		
		(Composed of -		
		1	NUT	250 617 R1
		1	NUT	251 050 R2
		§1	PIPE	
		2	SLEEVE	250 610 R2)

(*) - Refer to "Fuel and Gasoline Tanks" for piping
§ - Not Furnished Separately

PRINTED IN UNITED STATES OF AMERICA

REF. NO.	PART NUMBER	DESCRIPTION
		FUEL INJECTION PUMP, PIPES, GEAR AND CONNECTIONS (*) (TD-91) (For Engines equipped with IH Fuel Injection Pump) (Standard) - Continued
4	275 640 R11	PIPE ASSEMBLY, injection (cylinder No. 4) (Composed of - 1 NUT 250 617 R1; 1 NUT 251 050 R2; §1 PIPE; 2 SLEEVE 251 610 R2)
5	275 641 R91	PIPE SET, injection (Composed of - 1 PIPE 275 637 R11; 1 PIPE 275 638 R11; 1 PIPE 275 639 R11; 1 PIPE 275 640 R11)
6	275 635 R1	SCREW, nozzle body cap (6)
7	275 636 R1	SCREW, nozzle body cap (long) (2)
8	250 617 R1	NUT, injection pipe (nozzle end) (4)
9	275 633 R91	NOZZLE, injection (refer to Injection Nozzle and Pre-Combustion Chamber)
10	22 510 D	ELBOW, auxiliary fuel oil filter outlet pipe
11	22 510 D	ELBOW, auxiliary fuel oil inlet pipe (see fuel filters)
12	9 982 T	VALVE, fuel oil filter drain (2)
13	37 323 D	ELBOW, final fuel oil filter outlet pipe
14	37 323 D	ELBOW, final fuel oil filter inlet pipe (see fuel filters)
15	264 332 R21	PIPE w/two NUTS, 22 508 D and two NIPPLES, 22 509 D, auxiliary fuel filter inlet
16	264 333 R21	PIPE w/two NUTS, 22 508 D and two NIPPLES, 22 509 D, auxiliary fuel filter outlet
17	51 434 D	ELBOW, fuel tube inlet pipe (in water trap) (TD-91M 501 to 4627)
17	38 026 DM	CONNECTOR, fuel tube inlet pipe (in water trap end) (TD-91M - 4628 up)
18	22 507 D	CONNECTOR, auxiliary fuel filter inlet pipe (water trap end)
19	272 442 R11	PIPE w/NUT, 29 898 D, plunger drain
20	29 898 D	NUT, connector plunger drain pipe
21	29 901 D	CONNECTOR, plunger drain pipe
22	38 026 DM	CONNECTOR, fuel filter inlet pipe (pump end)
23	37 165 D	NUT, fuel filter inlet pipe connector (pump end)
24	62 950 DAX	PIPE w/two NUTS, 37 165 D, final fuel filter inlet
25	62 951 DAX	PIPE w/two NUTS, 37 165 D, final fuel filter outlet
26	37 165 D	NUT, final fuel filter outlet pipe (fuel pump end)
27	251 050 R2	NUT, injection pipe (pump end) (4)
28	275 644 R1	CLAMP, injection pipe (tapped) 1/4NF x 1-1/4" hex-hd. cap SCREW (4) 1/4" internal-tooth lock WASHER (4)
29	275 642 R1	PAD, injection pipe clamp (2)
30	275 643 R1	CLAMP, injection pipe (drilled)
31	62 939 DB	GASKET, injection pump
32	8 146 DB	GEAR, injection pump

-59-

FUEL SYSTEM

REF. NO.	PART NUMBER	DESCRIPTION
		FUEL INJECTION PUMP, PIPES, GEAR AND CONNECTIONS (*) (TD-91) (For Engines equipped with IH Fuel Injection Pump) (Standard) - Continued
33	46 584 D	INDICATOR, injection pump gear timing 3/8NF x 1" hex-hd. cap SCREW (3)
34	260 623 R1	NUT, injection pump mounting stud
35	16 849 R1	SCREW, 3/8 x 2-1/2" hex-hd. cap w/lock WASHER (2)
	272 424 R1	CLIP, plunger drain pipe
	22 509 D	NIPPLE, pipe (auxiliary fuel filter inlet and outlet) (4)
	22 508 D	NUT, pipe (auxiliary fuel filter inlet and outlet) (4)
	37 165 D	NUT, final fuel filter inlet and outlet pipe (filter end) (2)
	250 610 R2	SLEEVE, injection pipe (8)

I H SINGLE PLUNGER FUEL INJECTION PUMP

270 074 R91 PUMP, assembly, Model B, IH fuel injection (1550 RPM - 9% regulation) (See NOTE) Same as Model B fuel injection Pump, 270 052 R91 listed in Injection Pump Parts Catalog PU-40A Except -

The following items are Deducted from Model B Fuel Injection Pump, 270 074 R1, Assembly

1	COVER, side, pump housing	270 670 R1
1	CUP, oil filter	260 429 R93
1	SPRING, governor	267 711 R91

The following items are Added to Model B Fuel Injection Pump, 270 074 R1, Assembly

1	COVER, side, pump housing, w/FILLER COVER, 272 408 R1 and "O" RING, 253 070 R1	272 411 R91
1	PLATE, cover, top	272 147 R1
1	SPRING, governor	265 509 R91

3/8 x 1-1/2" hex-hd. cap SCREW
3/8 x 2-1/2" hex-hd. cap SCREW
3/8" lock WASHER (2)

(*)- Refer to "Fuel and Gasoline Tanks" for piping
§ - Not Furnished Separately
NOTE - Refer to Fuel Injection Pump Parts Catalog PU-40A when ordering Detail Parts for complete Model "B" Fuel Injection Pumps and also for Special Model "B" Fuel Injection Pumps not listed above. For Speed Charts see Injection Pump Parts Catalog PU-40A.

REF. NO.	PART NUMBER	DESCRIPTION

INJECTION NOZZLE AND PRE-COMBUSTION CHAMBER
(TD-61 and TD-91)

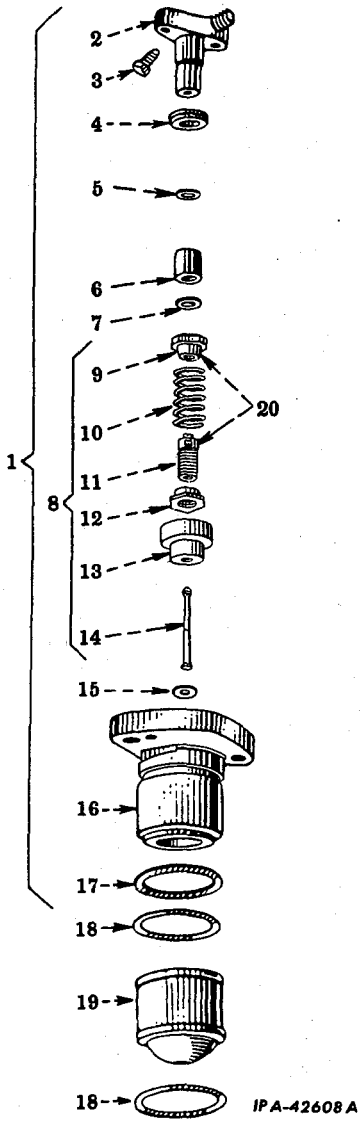

⊗ - KEY TO UNITS
A - Service Parts for injection nozzle and pre-combustion chamber (TD-61)
B - Service Parts for injection nozzle and pre-combustion chamber (TD-91)

⊗ - Letters of these units correspond with those shown following the description of the parts in the list below and identifies the unit for which the part is used. Items without letters after the description indicates the part is used for all units.

1	275 802 R91	NOZZLE ASSEMBLY, injection (4 for Unit A)	
		(Composed of -	
		§1 BODY	
		1 FITTING	275 631 R1
		2 GASKET	37 148 D
		1 SCREEN	271 648 R91

REF. NO.	PART NUMBER	DESCRIPTION

INJECTION NOZZLE AND PRE-COMBUSTION CHAMBER
(TD-61 and TD-91) - Continued

1	275 802 R91	NOZZLE ASSEMBLY, injection (4 for Unit A) - Continued	
		(Composed of - Continued	
		1 SEAL	61 209 DA
		1 SEAL	250 608 R1
		1 SLEEVE	271 743 R1
		1 VALVE	275 719 R91
		1 VALVE	275 634 R1)
1	275 633 R91	NOZZLE ASSEMBLY, injection (4 for Unit B)	
		(Composed of -	
		§1 BODY	
		1 FITTING	275 631 R1
		2 GASKET	37 148 D
		1 SCREEN	271 648 R91
		1 SEAL	251 044 R2
		1 SEAL	250 608 R1
		1 SLEEVE	271 743 R1
		1 VALVE	275 719 R91
		1 VALVE	275 634 R1)
2	275 631 R1	FITTING, nozzle (4) 3/8NF x 1-3/8" hex-hd. cap SCREW (8)	
3	275 634 R1	VALVE, nozzle bleeder (4)	
4	250 608 R1	SEAL, nozzle fitting dust (4)	
5	271 648 R91	SCREEN, nozzle (4)	
6	271 743 R1	SLEEVE, nozzle valve (4)	
7	37 148 D	GASKET, nozzle valve (4)	
8	275 719 R91	VALVE ASSEMBLY, nozzle (.012" valve lift)	
		(Composed of -	
		1 SCREW and SEAT	278 008 R91
		§1 SEAT	
		1 SEAT	271 740 R1
		1 SPRING	276 954 R1
		§1 VALVE	)
9		SEAT, upper nozzle valve spring (not furnished separately - order Ref. No. 20) (4)	
10	276 954 R1	SPRING, nozzle valve (will work for 271 739 R1) (4)	
11		SCREW, nozzle valve stop (not furnished separately - order Ref. No. 20) (4)	
12	271 740 R1	SEAT, lower nozzle valve spring (threaded) (4)	
13		SEAT, nozzle valve (not furnished separately order Ref. No. 8) (4)	
14		VALVE, nozzle (not furnished separately - order VALVE - Ref. No. 8) (4)	
15	37 148 D	GASKET, nozzle valve sleeve (4)	
16	275 803 R11	BODY, nozzle (includes SEAL, 250 608 R1 and SEAL, 61 209 DA) (4 for Unit A)	
16	275 632 R11	BODY, nozzle (includes SEAL, 250 608 R1 and SEAL, 251 044 R2) (4 for Unit B)	
17	251 044 R2	SEAL, nozzle body dust (4 for Unit B)	
17	61 209 DA	SEAL, nozzle body dust (4 for Unit A)	
18	251 042 R4	GASKET, pre-combustion chamber (8 for Unit B)	
18	260 879 R4	GASKET, pre-combustion chamber (8 for Unit A)	
19	268 166 R1	CHAMBER, pre-combustion (4 for Unit B)	
19	260 878 R1	CHAMBER, pre-combustion (4 for Unit A)	
20	278 008 R91	SCREW w/SEAT, upper nozzle valve stop	

§ - Not Furnished Separately

FUEL SYSTEM

REF. NO.	PART NUMBER	DESCRIPTION

WATER TRAP
(TD-61 and TD-91)

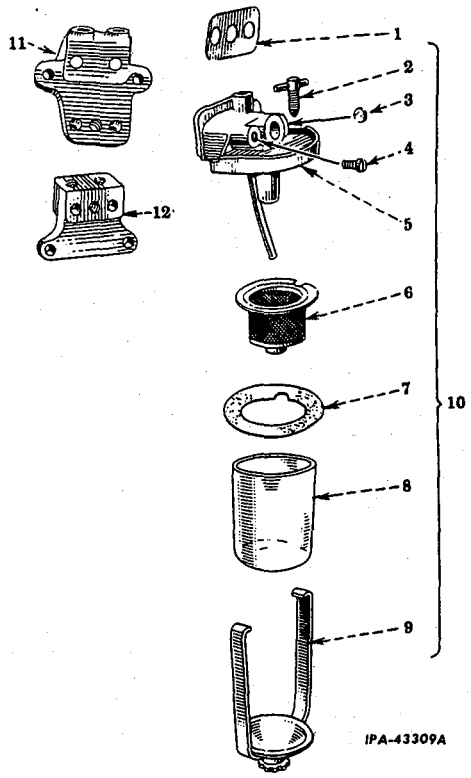

1	51 527 DC	GASKET, water trap
2	279 173 R1	SCREW, water trap drain (will work for 251 347 R11)
3	24 805 D	PLUG, 3/8" water trap top expansion
4	60 871 DA	SCREW, water trap vent
5	251 380 R91	TOP w/drain PIPE and PLUG, 24 805 D, water trap 1/2 x 3" hex-hd. cap SCREW 1/2" lock WASHER
6	251 348 R91	SCREEN, water trap
7	260 708 R2	GASKET, water trap bowl
8	60 877 D	BOWL, water trap
9	60 878 DX	BAIL, water trap
10	251 355 R91	TRAP ASSEMBLY, water (Composed of - 1 BAIL 60 878 DX 1 BOWL 60 877 D 1 GASKET 260 708 R2 1 SCREEN 251 348 R91 1 SCREW 60 871 DA 1 SCREW 279 173 R1 1 TOP 251 380 R91)
11	9 312 DA	BRACKET, water trap (TD-61) 3/8NF NUT (2)
	50 410 DA	PLUG, 1/8" csk-hdls. pipe (2) 3/8" lock WASHER (2)
12	9 311 D	BRACKET, water trap (TD-91) 3/8 x 1" hex-hd. cap SCREW (2) 3/8" lock WASHER (2)

FUEL SYSTEM

REF. NO.	PART NUMBER	DESCRIPTION

WATCH DOG FUEL FILTER
(TD-61 and TD-91)

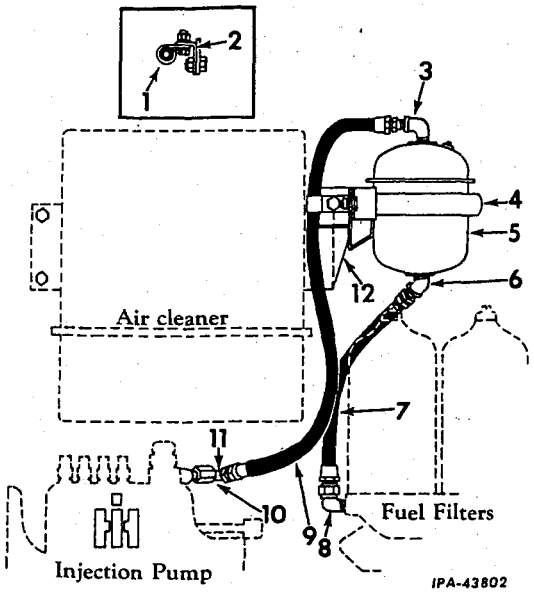

⊗- KEY TO UNITS

A -	277 050 R91	ATTACHMENT, watch dog fuel filter for use with I. H. fuel pumps only (TD-61) (See NOTE)
B -	277 043 R91	ATTACHMENT, watch dog fuel filter for use with I. H. fuel pumps only (TD-91) (See NOTE)

⊗ Letters of these units correspond with those shown following the description of the parts in the list below and identifies the unit for which the part is used. Items without letters after the description indicates the part is used for all units.

1	251 119 R1	CLAMP, watch dog filter to injection pump hose 3/8" NUT 3/8 x 5/8" hex-hd. cap SCREW 3/8" lock WASHER
2	277 048 R1	SUPPORT, fuel hose clamp
3	120 499	ELBOW, 1/4 x 90° filter outlet street
4	277 033 R91	BRACKET ASSEMBLY, watch dog filter 3/8" NUT (2) 3/8 x 7/8" hex-hd. cap SCREW (2) 3/8" lock WASHER (2)
5	277 025 R92	FILTER, watch dog fuel
6	121 619	ELBOW, 1/4" x 45° watch dog filter inlet street
7	268 318 R91	HOSE, 5/16 x 12" long watch dog filter to final filter
8	118 755	ELBOW, 3/8" x 90° final filter outlet
9	268 314 R91	HOSE, 5/16 x 26-1/2" long watch dog filter to injection pump
10	253 667 R1	CONNECTOR, fuel inlet
11	118 755	ELBOW, 3/8" x 90° injection pump inlet
12	277 044 R91	BRACKET, watch dog filter support 3/8NF x 1" hex-hd. cap SCREW (2)

NOTE - Factory Application - Order on Machine Order Form.
Field Application - Order through Regular Service Parts Channels.

REF. NO.	PART NUMBER	DESCRIPTION

FAN, THERMOSTAT AND WATER PUMP
(T-61)

-62-

COOLING SYSTEM

REF. NO.	PART NUMBER	DESCRIPTION

FAN, THERMOSTAT AND WATER PUMP
(T-61) - Continued

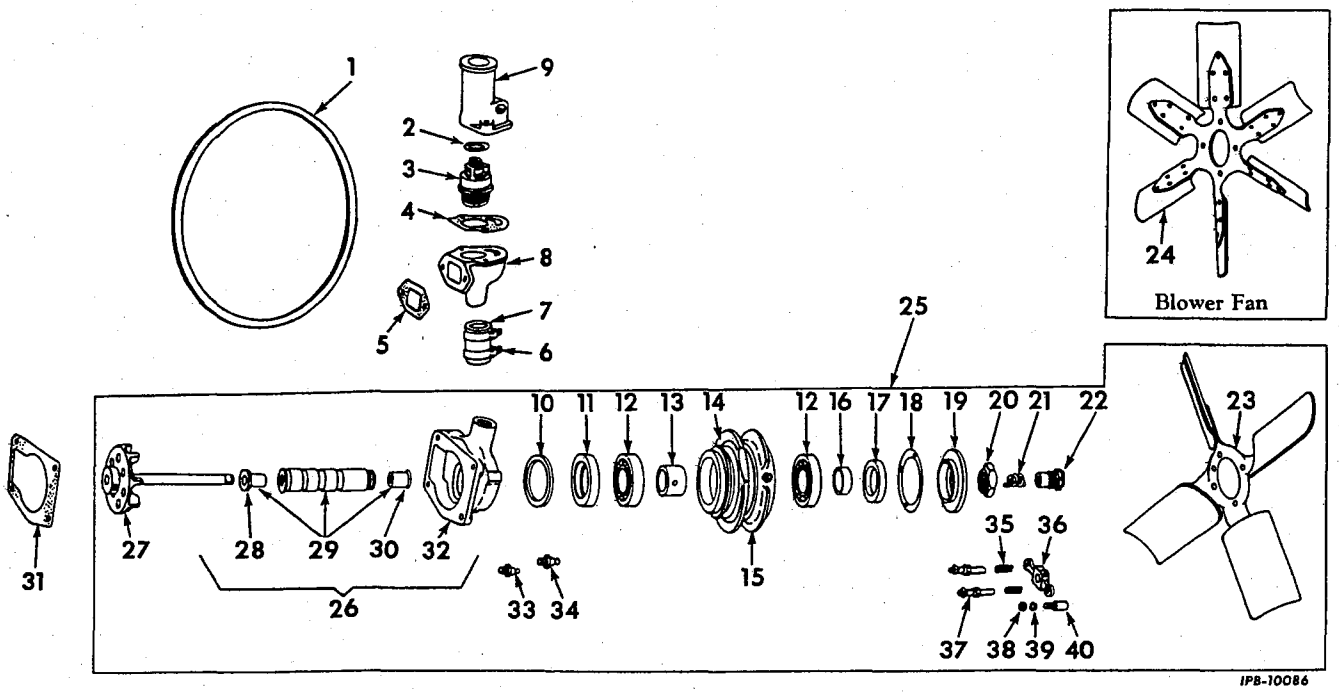

1	16 131 DA	BELT, fan (optional with 277 448 R1) (will work for 69 440 DA)
1	277 448 R1	BELT, fan (cog-type) (heavy duty) (optional with 16 131 DA)
2	254 753 R1	SEAL, thermostat
3	261 514 R92	THERMOSTAT, 165° - 190°, w/SEAL, 254 753 R1 (not low boiling point)
3	261 590 R92	THERMOSTAT, 130° - 155°, w/SEAL, 254 753 R1 (low boiling point) (used with attachment, 255 876 R91)
4	45 984 D	GASKET, thermostat housing
5	45 986 D	GASKET, water outlet elbow
6	357 870 R91	CLAMP, water pump by-pass hose (2)
7	45 985 D	HOSE, 1-1/2 x 2-3/8" x 3 ply water pump by-pass
8	6 344 D	ELBOW, water outlet 3/8 x 1" hex-hd. cap SCREW (2) 3/8" lock WASHER (2)
9	365 585 R1	HOUSING, thermostat 3/8 x 1" hex-hd. cap SCREW (2) 3/8" lock WASHER (2)
10	20 300 D	WASHER, water pump felt
11	20 290 D	OIL SEAL, rear water pump
12	ST 205 A	BEARING, water pump ball (2)
13	45 993 D	SPACER, water pump bearing
14	8 023 DAX	HUB w/OIL SEAL, 20 290 D, fan and generator pulley
15	2 370 DBX	FLANGE, fan and water pump pulley 5/16" jam NUT 5/16 x 7/8" slt-dog-pt. hdls. set SCREW
16	20 293 D	SLEEVE, water pump bearing lock
17	20 289 D	OIL SEAL, front water pump
18	21 839 DB	GASKET, water pump bearing retainer
19	20 306 DX	RETAINER w/OIL SEAL, 20 289 D, water pump bearing
20	20 299 D	NUT, water pump bearing clamp
21	50 790 D	PACKING, water pump (X)
22	20 296 D	GLAND, water pump packing
23	20 510 D	FAN, suction 5/16 x 1" hex-hd. cap SCREW (2) 5/16" lock WASHER (2)
24	66 927 DX	FAN, blower (19" diameter) (optional with 261 965 R91) (used with attachment, 256 352 R91)
24	261 965 R91	FAN, blower (19" diameter) (optional with 66 927 DX) (used with attachment, 256 352 R91)
25	57 043 DA	PUMP ASSEMBLY w/FAN, water (Composed of -

2	BEARING	ST 205 A
1	BODY	45 980 DA
1	DRIVER	20 585 D
1	FAN	20 510 D
1	FLANGE	2 370 DBX
1	GASKET	21 839 DB
1	GLAND	20 296 D
1	HUB	8 023 DAX
1	IMPELLER	6 345 DAX
2	LUBRICATOR	119 512
1	NUT	20 299 D
1	PIN	20 586 D
1	RETAINER	20 306 DX
1	SLEEVE	20 293 D
1	SPACER	45 993 D
2	SPRING	G 3 792
2	STUD	20 301 D
1	WASHER	20 300 D
2	WASHER	55 358 D)

7/16 x 1-1/4" hex-hd. cap SCREW (3)
7/16 x 2-1/2" hex-hd. cap SCREW
7/16" lock WASHER (4)

X - As Required

PRINTED IN UNITED STATES OF AMERICA

COOLING SYSTEM

REF. NO.	PART NUMBER	DESCRIPTION
		FAN, THERMOSTAT AND WATER PUMP (T-61) - Continued
26	45 980 DA	BODY w/SLEEVE, 45 982 DX, water pump 7/16 x 1-1/4" hex-hd. cap SCREW (3) 7/16 x 2-1/2" hex-hd. cap SCREW 7/16" lock WASHER (4)
27	6 345 DAX	IMPELLER w/SHAFT and thrust WASHER, water pump
28	20 303 DA	BUSHING, water pump thrust
29	45 982 DXA	SLEEVE w/BUSHING, 20 303 DA and 24 017 D, water pump
30	24 017 D	BUSHING, water pump shaft
31	45 981 D	GASKET, water pump body
32		BODY, water pump (order 45 980 DA)
33	119 512	FITTING, water pump bearing lubrication (Alemite 1610) (optional with 109 461)
33	109 461	FITTING, water pump bearing lubrication (Lincoln 5000) (optional with 119 512)
34	119 512	FITTING, water pump shaft lubrication (Alemite 1610) (optional with 109 461)
34	109 461	FITTING, water pump shaft lubrication (Lincoln 5000) (optional with 119 512)
35	G 3 792	SPRING, water pump driver (2)
36	20 585 D	DRIVER, water pump
37	20 301 D	STUD, water pump driving (2) 5/16" lock WASHER (2)
38		Follows Reference No. 40
39		Follows Reference No. 40
40	20 586 D	PIN, water pump driver 5/16NF NUT 5/16" lock WASHER

FAN, THERMOSTAT AND WATER PUMP (TD-61)

COOLING SYSTEM

REF. NO.	PART NUMBER	DESCRIPTION
		FAN, THERMOSTAT AND WATER PUMP (T-61) - Continued
	256 352 R91	ATTACHMENT, blower fan (consists of FAN 66 927 DX, DECAL and INSTRUCTION DIAGRAM) (2) Factory Application - Order on machine order form Field Application - Order through regular Service Parts Channels
	255 876 R91	ATTACHMENT, low boiling point thermostat and heat indicator (consists of THERMOSTA 261 590 R92 and heat INDICATOR, 63 782 D (See NOTE)
	355 140 R92	PACKAGE, water pump service (Composed of -

2	BEARING	ST 205 A
1	BUSHING	24 017 D
1	BUSHING	20 303 DA
1	GASKET	21 839 DB
1	GASKET	45 981 D
1	GLAND	20 296 D
1	IMPELLER	6 345 DAX
1	NUT	20 299 D
1	OIL SEAL	20 289 D
1	OIL SEAL	20 290 D
§1	PACKING	
1	PIN	20 586 D
2	STUD	20 301 D
2	SPRING	G 3 792
1	WASHER	20 300 D)

NOTE - Also listed in Engine Controls, Dash Instruments and Instrument Panel

§ - Not Furnished Separately

FAN, THERMOSTAT AND WATER PUMP (TD-61) - Continued

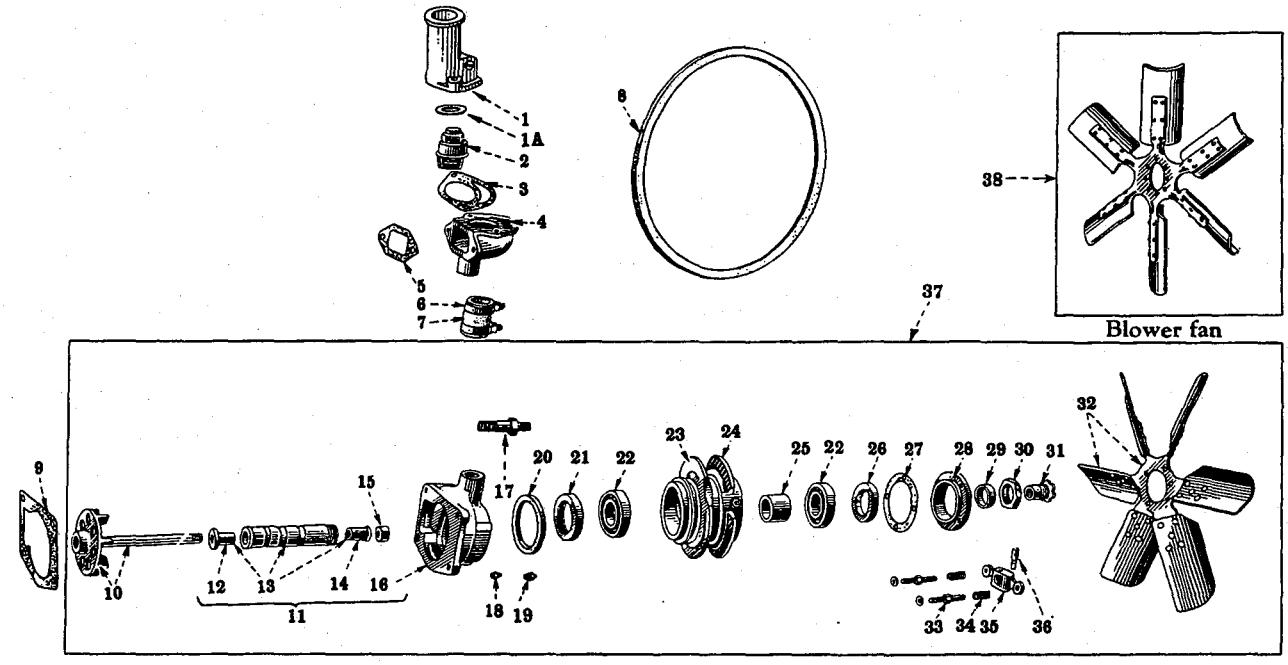

IPA-43304

COOLING SYSTEM

REF. NO.	PART NUMBER	DESCRIPTION
		FAN, THERMOSTAT AND WATER PUMP (TD-61) - Continued
1	275 645 R1	HOUSING, thermostat 3/8 x 1" hex-hd. cap SCREW (2) 3/8" lock WASHER (2)
1A	254 753 R1	SEAL, thermostat
2	261 514 R92	THERMOSTAT, 165° - 190°, w/SEAL, 254 753 R1 (not low boiling point)
2	261 590 R92	THERMOSTAT, 130° - 155°, w/SEAL, 254 753 R1 (low boiling point) (used with attachment, 255 876 R91)
3	45 984 D	GASKET, thermostat housing
4	8 174 D	ELBOW, water outlet 3/8 x 1" hex-hd. cap SCREW (2) 3/8" lock WASHER (2)
5	45 986 D	GASKET, water outlet elbow
6	274 087 R91	CLAMP, thermostat by-pass hose (2)
7	278 541 R1	HOSE, 1-1/2 x 2-3/8" - 3 ply, thermostat by-pass (will work for 45 985 D)
8	277 448 R1	BELT, fan and water pump (will work for 16 131 DA)
9	45 981 D	GASKET, water pump body
10	6 345 DAX	IMPELLER w/SHAFT and thrust WASHER, water pump
11	45 980 DA	BODY w/SLEEVE, 45 982 DXA, water pump 7/16 x 1-1/4" hex-hd. cap SCREW (2) 7/16 x 2-1/2" hex-hd. cap SCREW 7/16" lock WASHER (3)
12	20 303 DA	BUSHING, water pump shaft thrust
13	45 982 DXA	SLEEVE w/BUSHINGS, 20 303 DA and 24 017 D, water pump shaft
14	24 017 D	BUSHING, water pump shaft
15	50 790 D	PACKING, water pump (will work for 27 644 D) (X)
16		Not Furnished Separately
17	47 877 D	STUD, generator 7/16" lock WASHER
18	271 409	FITTING, 1/8" straight lubrication (water pump bearing) (Lincoln No. 105000) (optional with 138 322 H)
18	138 322 H	FITTING, 1/8" straight lubrication (water pump bearing) (Alemite No. 1610B) (optional with 271 409)
19	271 409	FITTING, 1/8" straight lubrication (water pump shaft) (Lincoln No. 105000) (optional with 138 322 H)
19	138 322 H	FITTING, 1/8" straight lubrication (water pump shaft) (Alemite No. 1610B) (optional with 271 409)
20	20 300 D	WASHER, water pump felt
21	20 290 D	OIL SEAL, rear water pump (optional with 357 770 R91 and 357 774 R91)
21	357 770 R91	OIL SEAL, rear water pump (optional with 20 290 D and 357 774 R91)
21	357 774 R91	OIL SEAL, rear water pump (optional with 20 290 D and 357 770 R91)
22	ST 205 A	BEARING, water pump ball (2)
23	272 747 R11	HUB w/OIL SEAL, 20 290 D, fan and generator pulley
24	2 370 DBX	FLANGE, fan and water pump pulley 5/16" jam NUT 5/16 x 7/8" hdls. dog-pt. set SCREW
25	45 993 D	SPACER, water pump bearing

-64-

COOLING SYSTEM

REF. NO.	PART NUMBER	DESCRIPTION
		FAN, THERMOSTAT AND WATER PUMP (TD-61) - Continued
26	20 289 D	OIL SEAL, front water pump (optional with 357 769 R91 and 357 773 R91)
26	357 769 R91	OIL SEAL, front water pump (optional with 20 289 D and 357 773 R91)
26	357 773 R91	OIL SEAL, front water pump (optional with 20 289 D and 357 769 R91)
27	21 839 DB	GASKET, water pump bearing retainer
28	20 306 DX	RETAINER w/OIL SEAL, 20 289 D, water pump bearing
29	20 293 D	SLEEVE, water pump bearing lock
30	20 299 D	NUT, water pump bearing clamp
31	20 296 D	GLAND, water pump packing
32	275 812 R91	FAN, suction 5/16 x 1" hex-hd. cap SCREW (2) 5/16" lock WASHER (2)
33	20 301 D	STUD, water pump driver (2) 5/16" lock WASHER (2)
34	273 887 R1	SPRING, water pump driver (2)
35	20 585 D	DRIVER, water pump
36	20 586 D	PIN, water pump driver 5/16NF NUT 5/16" lock WASHER
37	275 811 R91	PUMP w/FAN ASSEMBLY, water (Composed of - 2 BEARING ST 205 A 1 BODY 45 980 DA 1 DRIVER 20 585 D 1 FAN 275 812 R91 1 FLANGE 2 370 DAX 1 GASKET 21 839 DB 1 GLAND 20 296 D 1 HUB 272 747 R11 1 IMPELLER 6 345 DAX 1 LUBRICATOR 271 409 1 LUBRICATOR 138 322 H 1 NUT 20 299 D 1 PACKING 1 PIN 20 586 D 1 RETAINER 20 306 DX 1 SLEEVE 20 293 D 1 SPACER 45 993 D 2 SPRING 273 887 R1 2 STUD 20 301 D 1 WASHER 20 300 D) 7/16 x 1-1/4" hex-hd. cap SCREW (2) 7/16 x 2-1/2" hex-hd. cap SCREW 7/16" lock WASHER (4)
38	66 927 DX	FAN, blower (19" dia.) (optional with 261 965 R91) (used with ATTACHMENT, 256 352 R91)
38	261 965 R91	FAN, blower (19" dia.) (optional with 66 927 DX) (used with ATTACHMENT, 256 352 R91)
	256 352 R91	ATTACHMENT, blower fan (consists of FAN, 66 927 DX) (*)
	255 876 R91	ATTACHMENT, low boiling point thermostat and heat indicator (consists of THERMOSTAT, 261 590 R92 and heat INDICATOR, 63 782 D) (*) (See NOTE)

X - As Required
(*) - Factory Application - Order on Machine Order Form
Field Application - Order through Regular Service Parts Channels.
NOTE - Also Listed in ENGINE CONTROLS, DASH, INSTRUMENTS and INSTRUMENT PANEL.

COOLING SYSTEM

REF. NO.	PART NUMBER	DESCRIPTION

FAN, THERMOSTAT AND WATER PUMP
(TD-91)

-65-

COOLING SYSTEM

REF. NO. | PART NUMBER | DESCRIPTION

FAN, THERMOSTAT AND WATER PUMP
(TD-91) - Continued

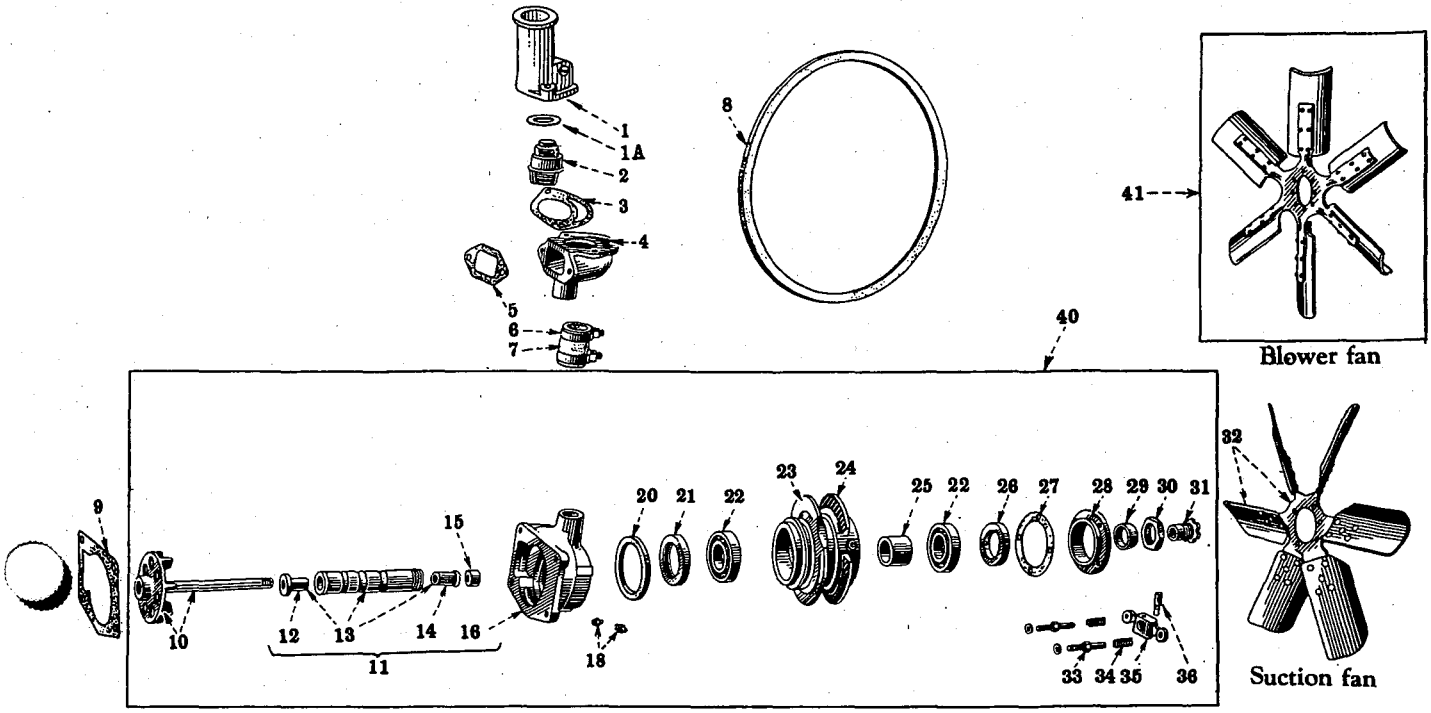

IPA-42729A

1	275 645 R1	HOUSING, thermostat 3/8 x 1" hex-hd. cap SCREW (2) 3/8" lock WASHER (2)
1A	254 753 R1	SEAL, thermostat
2	261 514 R92	THERMOSTAT, 165° - 190°, w/SEAL, 254 753 R1 (not low boiling point)
2	261 590 R92	THERMOSTAT, 130° - 155°, w/SEAL, 254 753 R1 (low boiling point) (used with ATTACHMENT, 255 876 R91)
3	45 984 D	GASKET, thermostat housing
4	9 355 D	ELBOW, water outlet 3/8 x 1" hex-hd. cap SCREW (2) 3/8" lock WASHER (2)
5	45 986 D	GASKET, water outlet elbow
6	279 024 R91	CLAMP, thermostat by-pass hose (will work for 274 087 R91) (2)
7	278 536 R1	HOSE, 1-1/2 x 2-3/8" long - 3 ply, thermostat by-pass (will work for 45 985 D)
8	48 042 DB	BELT, fan and water pump
9	47 955 D	GASKET, water pump body
10	6 518 DAX	IMPELLER w/SHAFT and thrust WASHER
11	68 315 DA	BODY w/SLEEVE, 45 982 DX, water pump
12	20 303 D	BUSHING, water pump shaft thrust
13	45 982 DX	SLEEVE w/BUSHINGS, 20 203 D and 24 017 D, water pump shaft
14	24 017 D	BUSHING, water pump shaft
15	50 790 D	PACKING, water pump (X)
16	6 586 D	BODY, water pump (order 68 315 DA)
18	271 409	FITTING, water pump shaft lubrication (Lincoln 105000) (optional with 138 322 H) (2)
18	138 322 H	FITTING, water pump shaft lubrication (Alemite 1610B) (optional with 271 409) (2)
20	20 300 D	WASHER, water pump felt
21	20 290 D	OIL SEAL, rear water pump (optional with 357 770 R91 or 357 774 R91)
21	357 770 R91	OIL SEAL, rear water pump (optional with 357 774 R91 or 20 290 D)
21	357 774 R91	OIL SEAL, rear water pump (optional with 357 770 R91 or 20 290 D)
22	ST 205 A	BEARING, water pump ball (2)
23	272 747 R11	HUB w/OIL SEAL, 20 290 D, fan and generator pulley
24	2 370 DBX	FLANGE, fan and water pump pulley
25	45 993 D	SPACER, water pump bearing
26	20 289 D	OIL SEAL, front water pump (optional with 357 769 R91 or 357 773 R91)
26	357 769 R91	OIL SEAL, front water pump (optional with 20 289 D or 357 773 R91)
26	357 773 R91	OIL SEAL, front water pump (optional with 357 769 R91 or 20 289 D)

X - As Required

PRINTED IN UNITED STATES OF AMERICA

REF. NO.	PART NUMBER	DESCRIPTION
		FAN, THERMOSTAT AND WATER PUMP (TD-91) - Continued
27	21 839 DB	GASKET, water pump bearing retainer
28	20 306 DX	RETAINER w/OIL SEAL, 20 289 D, water pump bearing
29	20 293 D	SLEEVE, water pump bearing lock
30	20 299 D	NUT, water pump bearing clamp
31	20 296 D	GLAND, water pump packing
32	274 876 R91	FAN (suction) 5/16 x 1" hex-hd. cap SCREW (2) 5/16" lock WASHER (2)
33	20 301 D	STUD, water pump driving (2) 5/16" lock WASHER (2)
34	G 3 792	SPRING, water pump driver (2)
35	20 585 D	DRIVER, water pump
36	20 586 D	PIN, water pump driver 5/16NF NUT 5/16" lock WASHER
40	282 850 R91	PUMP ASSEMBLY, water (together with 274 876 R91 will work for 282 656 R91) (Composed of - 2 BEARING ST 205 A 1 BODY 68 315 DA 1 DRIVER 20 585 D 2 FITTING 271 409 1 FLANGE 2 370 DBX 1 GASKET 21 839 DB 1 GLAND 20 296 D 1 HUB 272 747 R11 1 IMPELLER 6 518 DAX 1 NUT 20 299 D X PACKING 50 790 D 1 PIN 20 586 D 1 RETAINER 20 306 DX 1 SLEEVE 20 293 D 1 SPACER 45 993 D 2 SPRING G 3 792 2 STUD 20 301 D 1 WASHER 20 300 D) 7/16 x 1-1/4" hex-hd. cap SCREW 7/16 x 2-1/2" hex-hd. cap SCREW (2) 7/16" lock WASHER (4)
41	273 269 R91	FAN, blower (Schwitzer-Cummings Co.) (order 256 351 R91) 5/16 x 1" hex-hd. cap SCREW (2) 5/16" lock WASHER (2)
41	256 351 R91	ATTACHMENT, blower fan (20"), w/FAN, 273 269 R91 (will work for 261 964 R91) (Schwitzer-Cummings Co.) (See NOTE)
	255 876 R91	ATTACHMENT, low boiling point thermostat and heat consists of THERMOSTAT, 261 590 R92 and HEAT INDICATOR, 63 782 D) (See NOTE)
		NUT, 5/16" jam (for fan and water pump pulley)
		SCREW, 5/16 x 7/8" hdls. dog-pt. set (for fan and water pump pulley)

X - As Required

NOTE - Factory Application - Order on Machine Order Form
Field Application - Order through Regular Service Parts Channels

-66-

COOLING SYSTEM

COOLING SYSTEM

REF. NO.	PART NUMBER	DESCRIPTION

RADIATOR, GRILLE, FAN HOUSING AND CONNECTIONS
(T-61, TD-61 and TD-91)

-67-

COOLING SYSTEM

REF. NO. | PART NUMBER | DESCRIPTION

RADIATOR, GRILLE, FAN HOUSING AND CONNECTIONS
(T-61, TD-61 and TD-91) - Continued

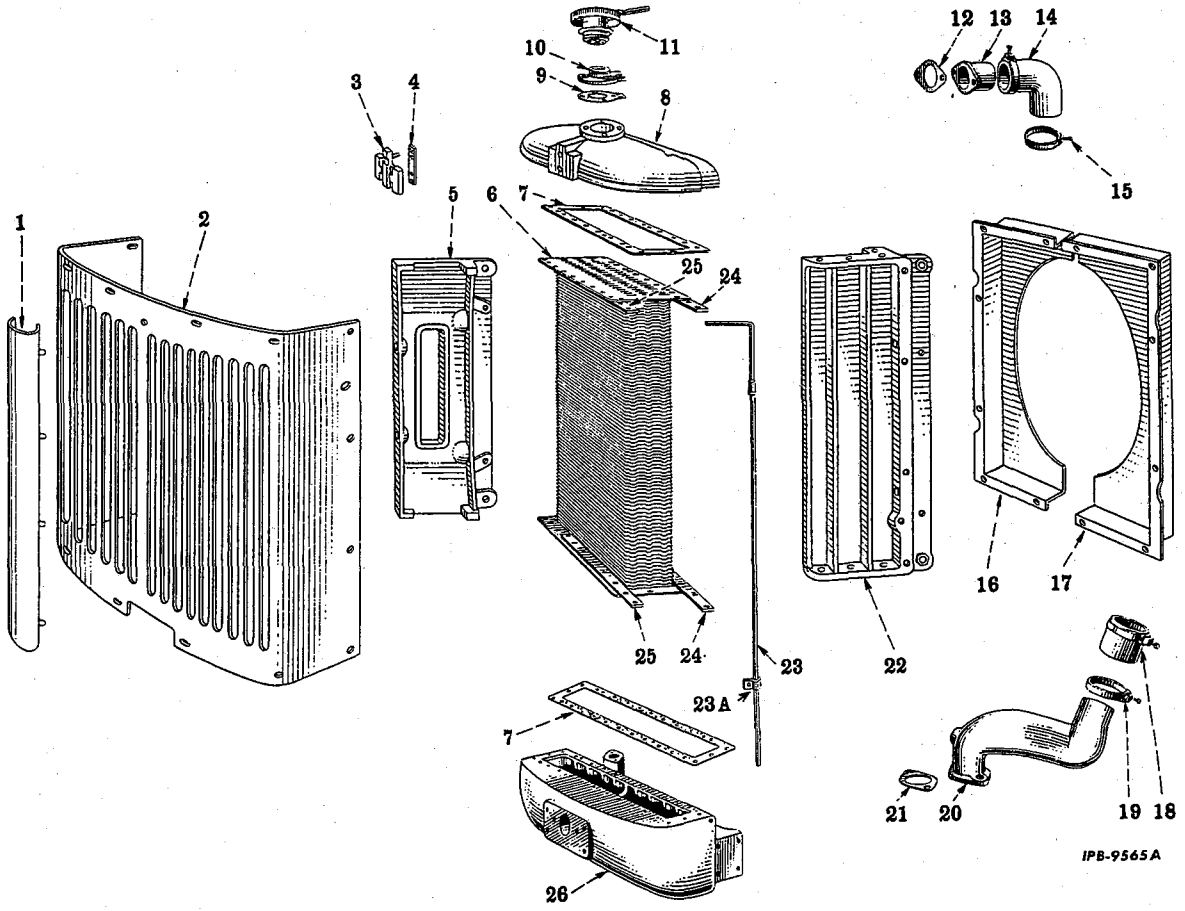

1	275 339 R91	MOULDING, radiator grille (T-61 and TD-61)
1	275 192 R91	MOULDING, radiator grille (TD-91)
2	275 337 R11	GRILLE, radiator (T-61 and TD-61)
2	275 190 R11	GRILLE, radiator (TD-91) 5/16 x 5/8" hex-hd. cap SCREW (14) 5/16" lock WASHER (14) 11/32 x 3/4" x 16 ga. WASHER (14)
3	275 194 R91	EMBLEM, I.H.
4	275 193 R1	SUPPORT, I.H. No. 12 x 3/8" rd-hd. mach. SCREW (2)
5	275 327 R1	SPACER w/SNUBBER, 275 341 R1, RH radiator core (T-61 and TD-61)
5	275 170 R11	SPACER w/SNUBBER, 275 341 R1, RH radiator core (TD-91) 7/16 x 1-1/4" hex-hd. cap SCREW (6) 7/16 x 1-1/2" hex-hd. cap SCREW (2) 7/16" lock WASHER (8)
6	275 329 R91	CORE, radiator (T-61 and TD-61)
6	275 171 R91	CORE, radiator (TD-91)
7	45 730 DA	GASKET, radiator (T-61 and TD-61) (2)
7	48 164 DA	GASKET, radiator (T-91) (2)
8	267 963 R2	TANK, water radiator upper (TD-91)
8	266 746 R2	TANK, water radiator upper (T-61 and TD-61)
9	266 749 R1	GASKET, radiator filler neck base
10	266 747 R11	BASE w/PLUG, 103 883, rod filler neck 3/8 x 7/8" hex-hd. cap SCREW (5) 3/8" lock WASHER (5)
11	268 795 R91	CAP, radiator pressure (4 lbs.)
12	22 383 D	GASKET, radiator inlet
13	6 297 D	PIPE, radiator inlet 3/8 x 1" hex-hd. cap SCREW (2) 3/8" lock WASHER (2)
14	275 173 R1	HOSE, radiator inlet (TD-61 and TD-91)
14	275 332 R1	HOSE, radiator inlet (T-61)
15	279 026 R91	CLAMP, radiator inlet hose (will work for 274 088 R91) (2)
16	275 334 R1	SHEET, RH fan housing (T-61)
16	275 336 R1	SHEET, RH fan housing (TD-61)
16	275 189 R1	SHEET, RH fan housing (TD-91) 5/16 x 5/8" hex-hd. cap SCREW (6) 5/16" lock WASHER (6)

PRINTED IN UNITED STATES OF AMERICA

REF. NO.	PART NUMBER	DESCRIPTION
		RADIATOR, GRILLE, FAN HOUSING AND CONNECTIONS (T-61, TD-61 and TD-91) - Continued
17	275 333 R1	SHEET, LH fan housing (T-61)
17	275 335 R1	SHEET, LH fan housing (TD-61)
17	275 188 R1	SHEET, LH fan housing (TD-91)
		5/16 x 5/8" hex-hd. cap SCREW (6)
		5/16" lock WASHER (6)
18	278 538 R1	HOSE, radiator outlet (T-61 and TD-61)
18	16 077 DA	HOSE, radiator outlet (TD-91)
19	279 026 R91	CLAMP, radiator outlet hose (2)
20	6 331 D	ELBOW, radiator outlet (T-61)
20	6 332 D	ELBOW, radiator outlet (TD-61)
20	6 628 D	ELBOW, radiator outlet (TD-91)
		3/8 x 1" hex-hd. cap SCREW (2)
		3/8" lock WASHER (2)
21	22 383 D	GASKET, radiator outlet elbow
22	275 326 R11	SPACER w/SNUBBER, 275 341 R1, LH radiator core (T-61 and TD-61)
22	275 169 R11	SPACER w/SNUBBER, 275 341 R1, LH radiator core (TD-91)
		7/16 x 1-1/4" hex-hd. cap SCREW (6)
		7/16 x 1-1/2" hex-hd. cap SCREW (2)
		7/16" lock WASHER (8)
23	276 997 R11	PIPE w/NUT, 289 953 R91, radiator overflow (will work for 281 441 R11) (T-61 and TD-61)
23	281 065 R11	PIPE w/NUT, 278 953 R91, radiator overflow (TD-91)
23A	281 066 R1	CLIP, radiator overflow pipe
		5/16 x 3/4" hex-hd. cap SCREW
		5/16" lock WASHER
24	48 159 D	STIFFENER, radiator core, rear (TD-91) (2)
		5/16 x 7/8" hex-hd. cap SCREW (12)
		5/16" lock WASHER (12)
24	45 725 D	STIFFENER, radiator core rear (T-61 and TD-61) (2)
		5/16 x 3/4" hex-hd. cap SCREW (12)
		5/16" lock WASHER (12)
25	45 726 D	STIFFENER, radiator core front (T-61 and TD-61) (2)
		5/16" NUT (2)
		5/16 x 3/4" hex-hd. cap SCREW (14)
		5/16 x 7/8" hex-hd. cap SCREW (2)
		5/16" lock WASHER (16)
25	48 160 D	STIFFENER, radiator core front (TD-91) (2)
		5/16 x 7/8" hex-hd. cap SCREW (16)
		5/16" lock WASHER (16)
26	6 857 DA	TANK, water radiator lower (T-61 and TD-61)
26	6 627 DA	TANK, water radiator lower (TD-91)
	37 323 D	ELBOW, radiator overflow pipe
	272 603 R1	FASTENER, radiator grille moulding (4)
	363 284 R2	FASTENER, I.H. emblem
	278 953 R91	NUT, elbow radiator overflow pipe
	103 883	PLUG, 1/8" slt-hdls. pipe

REF. NO.	PART NUMBER	DESCRIPTION
		RADIATOR, GRILLE, FAN HOUSING AND CONNECTIONS (T-61, TD-61 and TD-91) - Continued
275 325 R91		RADIATOR ASSEMBLY (T-61 and TD-61) (Composed of -
	1	BASE 266 747 R11
	1	CAP 268 795 R91
	2	CLIP 281 066 R1
	1	CORE 275 329 R91
	1	ELBOW 37 323 D
	1	GASKET 45 730 DA
	1	GASKET 266 749 R1
	1	NUT 278 953 R91
	1	PIPE 276 997 R2
	1	SPACER 275 326 R11
	1	SPACER 275 327 R11
	2	STIFFENER 45 725 D
	2	STIFFENER 45 726 D
	1	TANK 6 857 DA
	1	TANK 266 746 R2
	1	VALVE 274 931 R91)
275 256 R91		RADIATOR ASSEMBLY (TD-91) (Composed of -
	1	BASE 266 747 R11
	1	CAP 268 795 R91
	2	CLIP 281 066 R1
	1	CORE 275 171 R91
	1	ELBOW 37 323 D
	2	GASKET 48 164 DA
	1	GASKET 266 749 R1
	1	NUT 278 953 R91
	1	PIPE 281 065 R11
	1	SPACER 275 169 R11
	1	SPACER 275 170 R11
	2	STIFFENER 48 159 D
	2	STIFFENER 48 160 D
	1	TANK 6 627 DA
	1	TANK 267 963 R2
	1	VALVE 274 931 R91)
275 341 R91		SNUBBER, radiator core (2)
50 134 D		TUBE, radiator core repair (T-61 and TD-61) (X)
251 780 R91		TUBE, radiator core repair (TD-91) (X)
274 931 R91		VALVE, drain radiator

X - As Required

GOVERNOR

REF. NO.	PART NUMBER	DESCRIPTION

GOVERNOR AND CONNECTIONS
(T-61)

-69-

GOVERNOR

REF. NO.	PART NUMBER	DESCRIPTION

GOVERNOR AND CONNECTIONS
(T-61) - Continued

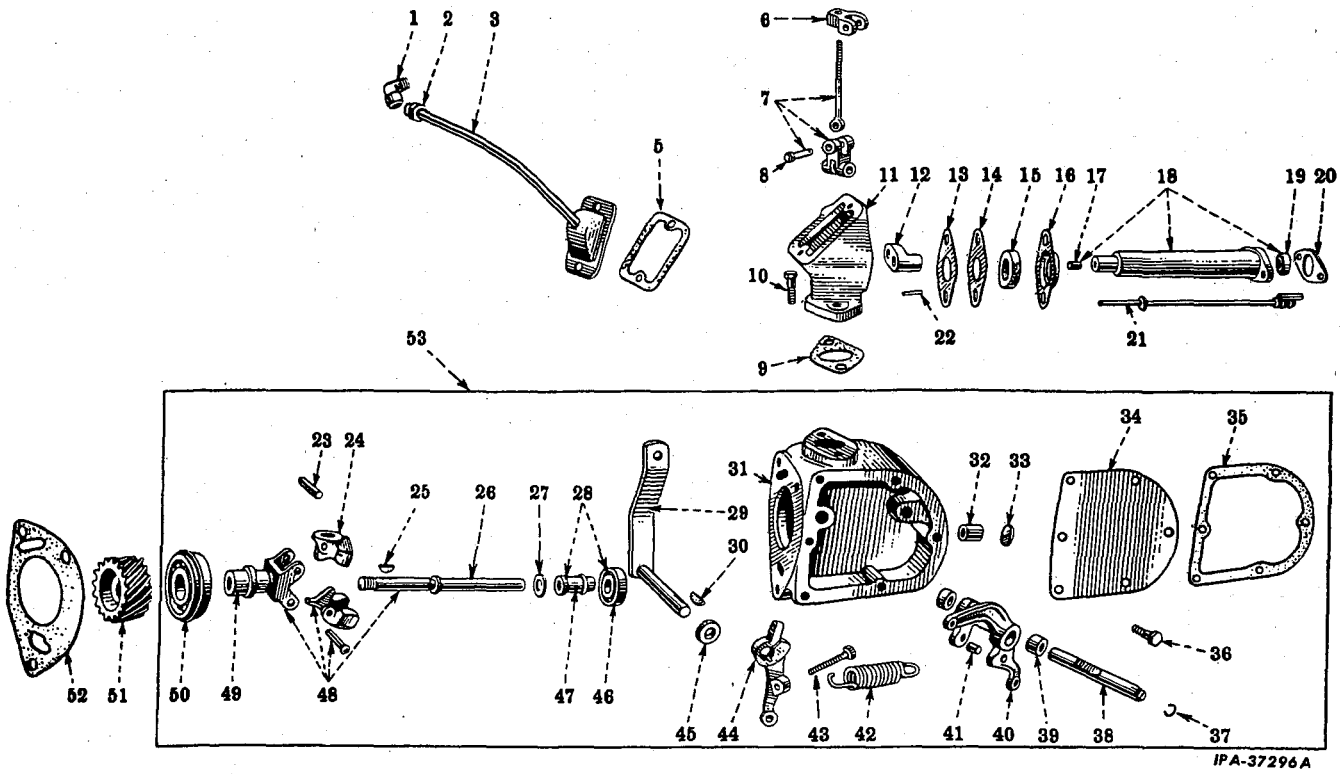

1	37 323 D	ELBOW, 3/8" 90° hi-duty tube fitting brs. (male pipe)
2	37 165 D	NUT, 3/8" hi-duty tube fitting brs.
3	51 208 DX	TUBE w/throttle lever COVER and NUT, 37 165 D, governor breather 1/4 x 1/2" fil-hd. SCREW (2)
5	48 501 DA	GASKET, throttle lever cover
6	6 289 D	BLOCK, governor connecting rod adjusting 1/4 x 51/64" drilled rod end PIN 1/16 x 1/2" cotter PIN
7	48 839 DX	ROD w/BLOCK and PIN, 48 496 DA, throttle shaft connecting 1/4NF NUT 1/16 x 1/2" cotter PIN 1/4 x 51/64" drilled rod end PIN
8	48 496 DA	PIN, throttle connecting rod
9	48 489 D	GASKET, governor connecting rod housing
10	364 489 R1	SCREW, governor connecting rod housing
11	6 737 D	HOUSING, governor connecting rod 5/16 x 11/16" hex-hd. cap SCREW
12	6 288 D	LEVER, throttle shaft
13	53 877 DA	GASKET, throttle shaft housing felt retainer
14	54 088 D	PLATE, throttle shaft housing felt retainer
15	48 493 D	WASHER, throttle shaft housing felt
16	48 492 D	RETAINER, throttle shaft housing felt 1/4 x 5/8" fil-hd. SCREW (2) 1/4" lock WASHER (2)
	16 558 R1	WASHER, 17/64 x 5/8" x No. 18 ga. (2)
17	45 696 D	BUSHING, throttle shaft
18	6 736 DBX	HOUSING w/BUSHING, 45 696 D and OIL SEAL, 362 201 R91, governor throttle shaft 1/4 x 3/4" slt-rd-hd. SCREW (2) 1/4" lock WASHER (2)
19	362 201 R91	OIL SEAL, governor throttle shaft
20	66 272 D	GASKET, throttle shaft housing to carburetor
21	49 788 DXA	SHAFT, throttle
22		PIN, 3/32 x 1/2" (throttle shaft lever)
23	45 656 DA	PIN, governor weight (2)
24	45 655 DA	WEIGHT, governor (2)
25	124 547	KEY, No. 7 ni-pltd-stl. Woodruff
26	48 255 DA	SHAFT, governor 9/16NF jam NUT
27	45 653 D	WASHER, governor sleeve thrust

PRINTED IN UNITED STATES OF AMERICA

GOVERNOR

REF. NO.	PART NUMBER	DESCRIPTION
		GOVERNOR AND CONNECTIONS (T-61) - Continued
28	351 910 R91	SLEEVE, 48 250 D, w/BEARING, ST 506, governor
29	363 931 R11	LEVER w/SHAFT, speed change
30	124 543	KEY, No. 3 (Woodruff) (governor spring lever)
31	8 363 DBX	HOUSING ASSEMBLY, governor (Composed of - 1 BUSHING 48 277 D §1 HOUSING 1 PLUG 172 540 1 SEAL 45 667 D) 7/16NF x 1" hex-hd. cap SCREW 7/16" lock WASHER
32	48 227 D	BUSHING, governor housing
33	172 540	PLUG, 7/8" expansion (in governor housing)
34	49 107 D	COVER, governor housing 5/16 x 11/16" hex-hd. cap SCREW (4)
	28 950 D	WASHER, governor housing cover (4)
35	49 108 DA	GASKET, governor housing cover
36	364 489 R1	SCREW, governor housing cover (2)
	28 950 D	WASHER, governor housing cover (2) 5/16" lock WASHER (2)
37	21 362 D	RING, governor rockshaft snap
38	48 253 DA	ROCKSHAFT, governor
39	45 775 D	BEARING, governor rockshaft (2)
40	6 633 DBX	LEVER w/two PINS, 48 254 D, governor rockshaft
41	48 254 D	PIN, governor rockshaft lever thrust (2)
42	357 012 R1	SPRING, governor
43	49 528 DA	BOLT, governor spring lever (long) 1/4" NUT
44	6 676 DB	LEVER, governor spring 1/4" NUT (2) 1/4 x 1" hex-hd. cap SCREW (2) 1/4" lock WASHER
45	45 667 D	OIL SEAL, speed change shaft
46	ST 506	BEARING, ball
47	48 250 D	SLEEVE, governor
48	48 256 DAXB	WEIGHT ASSEMBLY, w/CARRIER, governor (Composed of - 1 CARRIER 48 256 DA 1 KEY 124 547 2 PIN 45 656 DA 1 SHAFT 48 255 DA 2 WEIGHT 45 655 DA)
49	48 256 DA	CARRIER w/HUB, governor weight (optional with 360 535 R1)
49	360 535 R1	CARRIER, governor weight (optional with 48 256 DA)
50	ST 289	BEARING w/snap RING, ball
51	45 935 D	GEAR, governor (17 teeth)
52	45 685 D	GASKET, governor housing

GOVERNOR

REF. NO.	PART NUMBER	DESCRIPTION
		GOVERNOR AND CONNECTIONS (T-61) - Continued
53	365 590 R91	GOVERNOR ASSEMBLY, variable speed (Composed of - 2 BEARING 45 775 D 1 BEARING ST 289 1 BOLT 49 528 DA 2 BOLT 364 489 R1 1 COVER 49 107 D 1 GASKET 49 108 D 1 HOUSING 8 363 DBX 1 KEY 106 749 1 LEVER 6 676 DB 1 LEVER 363 931 R11 1 LEVER 6 633 DBX 1 RING 21 362 D 1 ROCKSHAFT 48 253 DA 1 SLEEVE and BEARING 351 910 R91 1 SPRING 357 012 R1 1 WASHER 45 653 D 6 WASHER 28 950 D 1 WEIGHT and CARRIER 48 256 DAXB) 3/8 x 1-1/4" hex-hd. cap SCREW (3) 3/8" lock WASHER (3)
	363 144 R92	PACKAGE, governor gasket (Composed of - 1 GASKET 45 865 D 1 GASKET 48 489 D 1 GASKET 48 501 DA 1 GASKET 49 108 DA 1 GASKET 53 877 DA 1 GASKET 66 272 D 1 WASHER 48 493 D)
	365 591 R92	PACKAGE, governor overhaul field service (Composed of - 1 BEARING ST 289 2 BEARING 45 775 D 1 BUSHING 48 227 D 1 GASKET 45 685 D 1 GASKET 48 489 D 1 GASKET 49 108 D 1 GASKET 48 501 DA 1 KEY 106 749 1 LEVER 363 931 R11 1 PLUG 172 540 1 SEAL 12 736 D 1 SEAL 45 667 D 1 SLEEVE and BEARING 351 910 R91 1 SPRING 357 012 R1 1 WASHER 45 653 D 1 WEIGHT and CARRIER 48 256 DAXB)
	12 736 D	SEAL, governor

§ - Not Furnished Separately

LUBRICATING SYSTEM

REF. NO.	PART NUMBER	DESCRIPTION

LUBRICATING OIL FILTER
(T-61)

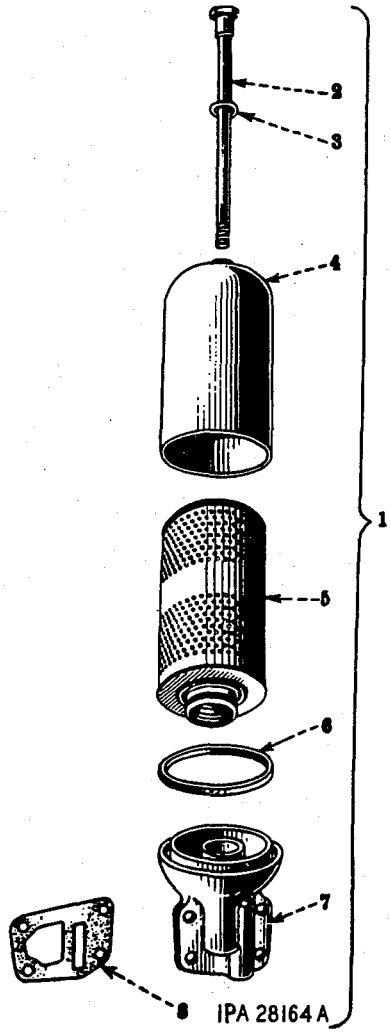

1	46 689 DE	FILTER ASSEMBLY, oil (less reference No. 8)
2	43 418 DA	BOLT, oil filter case retaining
3	13 727 D	GASKET, oil filter case retaining bolt
4	43 417 D	CASE, oil filter
5	360 431 R91	ELEMENT, oil filter (radial fin type - normal duty) (optional with 355 010 R91)
5	355 010 R91	ELEMENT, oil filter (radial fin type - heavy duty) (optional with 360 431 R91)
6	13 728 D	GASKET, oil filter case
7	6 253 DBX	BASE w/two PLUGS, 103 866, oil filter
	103 866	PLUG, 1/4" sq-hd. C.I. pipe (optional with 103 878) (2)
	103 878	PLUG, 1/4" sq-hd. pipe (optional with 103 866) (2)
		3/8 x 1-1/8" hex-hd. cap SCREW (4)
		3/8" lock WASHER (4)
8	45 447 D	GASKET, oil filter case

-71-

LUBRICATING SYSTEM

LUBRICATING OIL FILTER
(Full Flow) (TD-61 and TD-91)

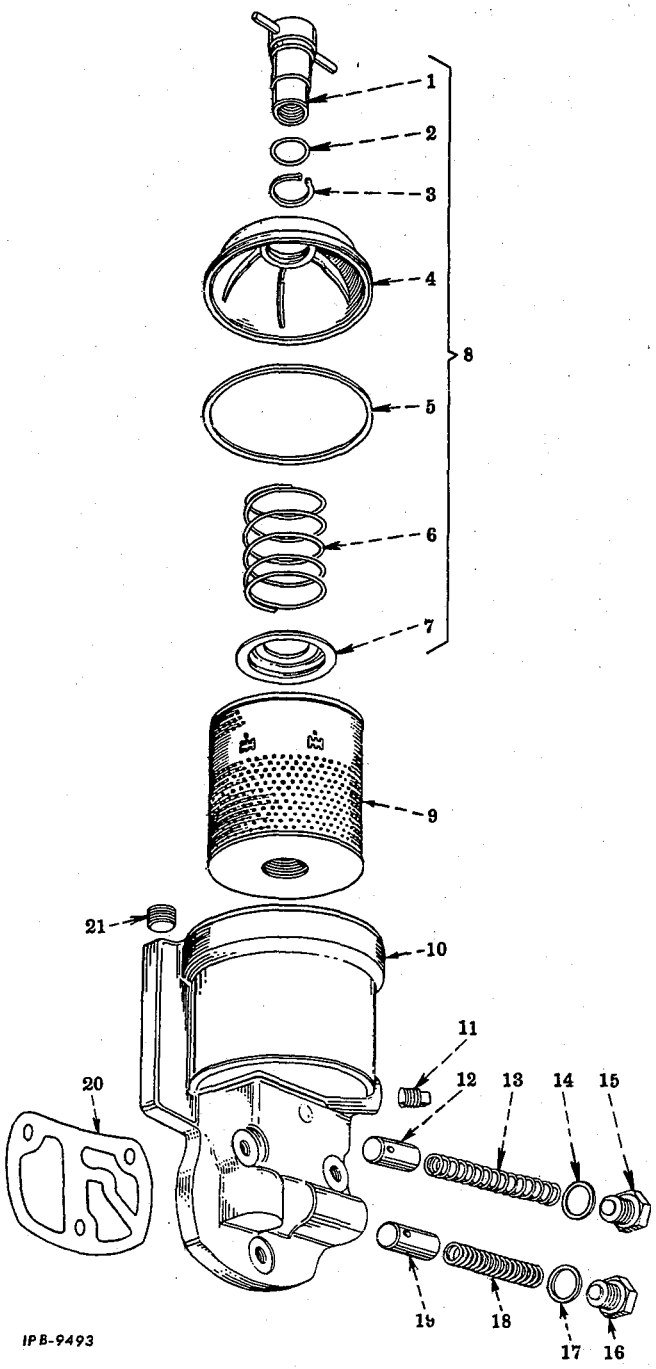

PRINTED IN UNITED STATES OF AMERICA

LUBRICATING SYSTEM

REF. NO.	PART NUMBER	DESCRIPTION

LUBRICATING OIL FILTER
(Full Flow) (TD-61 and TD-91) - Continued

	272 465 R91	FILTER ASSEMBLY, lubricating oil (Composed of - 1 BASE 272 469 R11 1 COVER 272 466 R91 1 ELEMENT 272 468 R91 2 GASKET 28 781 D 2 NUT 51 205 D 1 SPRING 260 234 R2 1 SPRING 272 472 R1 2 VALVE 261 630 R1) 7/16 x 2-1/2" hex-hd. cap SCREW (2) 7/16 x 1-1/4" hex-hd. cap SCREW 7/16" lock WASHER (3)
1	272 467 R11	NUT, lubricating oil filter case cover retaining
2	267 810 R1	"O" RING, lubricating oil filter case cover retaining nut
3	267 700 R1	RING, lubricating oil filter sealing cup retaining snap
4	267 808 R1	COVER, lubricating oil filter case (order 272 466 R91)
5	267 809 R1	"O" RING, lubricating oil filter case cover (5-1/32 x 5-13/32 x 3/16" thick)
6	265 543 R1	SPRING, lubricating oil filter element retaining
7	265 544 R1	CUP, lubricating oil filter case cover sealing

CRANKCASE OIL PAN AND LUBRICATING OIL PUMP
(T-61)

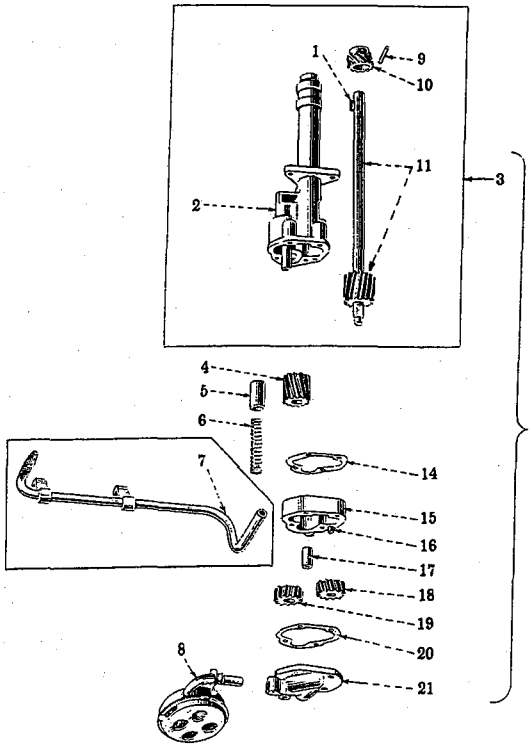

-72-

LUBRICATING SYSTEM

REF. NO.	PART NUMBER	DESCRIPTION

LUBRICATING OIL FILTER
(Full Flow) (TD-61 and TD-91) - Continued

8	272 466 R91	COVER ASSEMBLY, lubricating oil filter case (Composed of - §1 COVER 1 CUP 265 544 R1 1 NUT 272 467 R11 1 RING 267 700 R1 1 SPRING 265 543 R1 1 "O" RING 267 809 R1 1 "O" RING 267 810 R1)
9	272 468 R91	ELEMENT, lubricating oil filter
10	272 469 R11	BASE w/PLUG, 116 566 and PLUG, 103 878, lubricating oil filter
11	116 566	PLUG, 1/2" sq-hd. pipe
12	261 630 R1	VALVE, lubricating oil by-pass
13	260 234 R2	SPRING, lubricating oil by-pass valve
14	28 781 D	GASKET, lubricating oil by-pass valve retaining nut
15	51 205 D	NUT, lubricating oil by-pass valve retaining
16	51 205 D	NUT, lubricating oil regulating valve retaining
17	28 781 D	GASKET, lubricating oil regulating valve retaining nut
18	272 472 R1	SPRING, lubricating oil regulating valve
19	261 630 R1	VALVE, lubricating oil regulating
20	272 473 R1	GASKET, lubricating oil filter base
21	103 878	PLUG, 1/4" sq-hd. pipe

§ - Not Furnished Separately

CRANKCASE OIL PAN AND LUBRICATING OIL PUMP
(T-61) - Continued

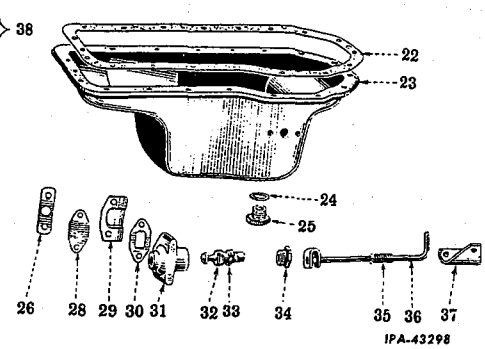

PRINTED IN UNITED STATES OF AMERICA

LUBRICATING SYSTEM

REF. NO.	PART NUMBER	DESCRIPTION
		CRANKCASE OIL PAN AND LUBRICATING OIL PUMP (T-61) - Continued
1	106 750	KEY, No. 6 x 5/32 x 5/8" oil pump drive pinion (Woodruff)
2	6 367 DX	BODY w/PLUG, 103 866 and idler shaft, oil pump
	103 866	PLUG, 1/4" sq-hd. C.I. (optional with 103 878)
	103 878	PLUG, 1/4" sq-hd. steel pipe (optional with 103 866)
		7/16 x 1-1/4" hex-hd. cap SCREW (2)
		7/16" lock WASHER (2)
3	46 163 DA	BODY, oil pump
4	46 153 D	GEAR, oil pump idler (12 T)
5	45 285 DA	VALVE, oil regulating
6	62 672 D	SPRING, oil regulating valve
7	53 834 DAX	PIPE w/SCREEN and CLIPS, oil return
		3/8 x 7/8" hex-hd. cap SCREW (2)
		3/8" lock WASHER (2)
8	56 108 D	SCREEN, oil pump (Floto)
		1/8 x 1-1/4" cotter PIN
9	141 881	PIN, oil pump drive pinion
10	45 052 D	PINION, oil pump drive (11 T)
11	364 945 R91	SHAFT w/GEAR, oil pump drive
14	45 704 D	GASKET, oil pump auxiliary gear housing (X)
15	8 476 DX	HOUSING w/DOWEL, 46 053 D and TUBE, 46 157 D, oil pump auxiliary gear
16	46 053 D	DOWEL, oil pump auxiliary gear housing
17	46 157 D	TUBE, oil inlet
18	46 161 D	GEAR, oil pump auxiliary body (12 T)
19	46 162 D	GEAR, oil pump auxiliary idler (12 T)
20	45 704 D	GASKET, oil pump cover (X)
21	8 480 D	COVER, oil pump
		3/8 x 2" hex-hd. cap SCREW (3)
		3/8 x 2-3/4" hex-hd. cap SCREW
		3/8" lock WASHER (4)
22	46 109 DA	GASKET, crankcase pan
23	60 397 DA	PAN w/PLUG, 113 933 H and GASKET, 3 405 H, crankcase (field change) (will work for 53 740 DAX)
23	53 740 DAX	PAN w/PLUG, 359 875 R1 and GASKET, 3 405 H, crankcase (optional with 60 397 DA)
	423 353	SCREW, 3/8 x 7/8" mach. hex-hd., w/external tooth lock WASHER (optional with 446 564) (16)
	446 564	SCREW, 3/8 x 7/8" mach. hex-hd., w/spring lock WASHER (optional with 423 353) (16)
	423 355	SCREW, 3/8 x 1-1/8" mach. hex-hd., w/external tooth lock WASHER (optional with 271 064) (2)
	271 064	SCREW, 3/8 x 1-1/8" mach. hex-hd., w/spring lock WASHER (optional with 423 355) (2)
24	3 405 H	GASKET, crankcase pan drain plug
25	359 875 R1	PLUG, 7/8" hex-hd. crankcase pan drain
25	113 933 H	PLUG, crankcase oil pan magnetic drain (field change)

-73-

LUBRICATING SYSTEM

REF. NO.	PART NUMBER	DESCRIPTION
		CRANKCASE OIL PAN AND LUBRICATING OIL PUMP (T-61) - Continued
26	31 281 D	LOCK, oil pan side drain cover nut (gasoline)
28	52 806 DXA	COVER w/two STUD, oil pan side drain (gasoline)
		3/8" NUT (2)
29	56 425 D	BAFFLE, oil pan side drain (distillate)
30	52 808 D	GASKET, oil pan side drain (distillate)
30	52 808 D	GASKET, oil pan side drain cover (gasoline)
31	31 279 D	BODY, oil pan side drain (distillate)
		3/8 x 3/4" hex-hd. cap SCREW (2)
32	31 283 D	VALVE, oil pan side drain (distillate)
33	31 285 D	PACKING, oil pan side drain valve (distillate)
34	31 284 D	GLAND, oil pan side drain packing (distillate - gasoline)
35	31 378 D	SPRING, oil pan side drain handle (distillate - gasoline)
36	49 246 DX	HANDLE w/LINK, oil pan side (distillate)
37	53 674 D	BRACKET, oil pan side drain handle (distillat
		3/8 x 3/4" hex-hd. cap SCREW (2)
		3/8" lock WASHER (2)
38	54 532 DA	PUMP ASSEMBLY, lubricating oil

X - As Required

REF. NO.	PART NUMBER	DESCRIPTION

CRANKCASE OIL PAN AND LUBRICATING OIL PUMP
(TD-61)

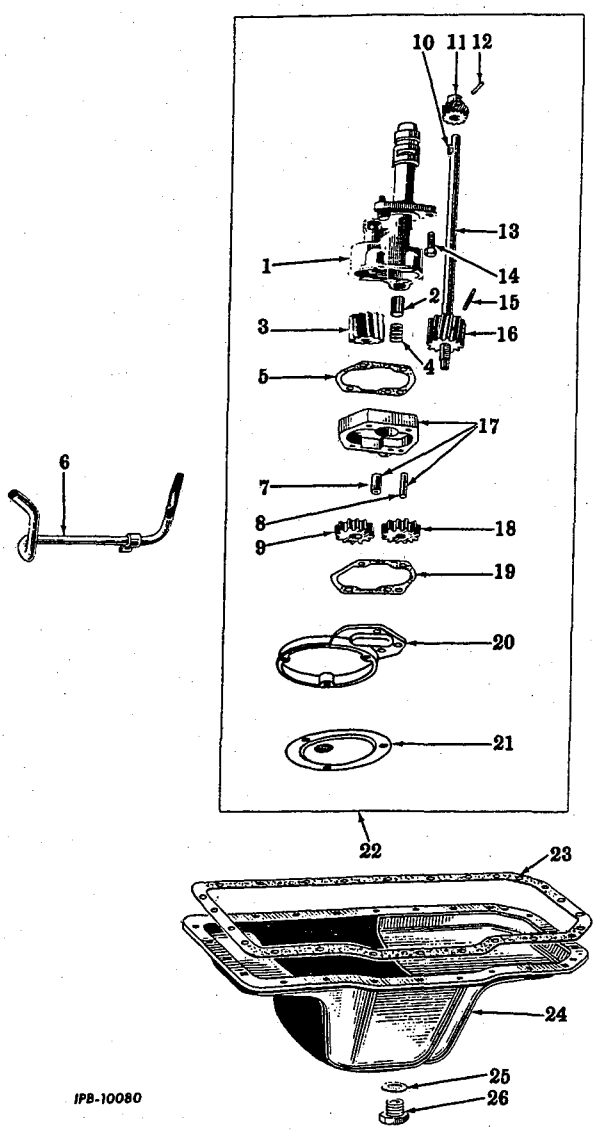

1	272 506 R91	BODY w/SHAFT and PLUG, 143 162, lubrication oil pump
2	272 753 R1	VALVE, lubricating oil safety
3	52 027 DB	GEAR, lubricating oil pump idler (12 T)
4	272 462 R1	SPRING, lubricating oil safety valve
5	51 044 DA	GASKET, lubricating oil pump body
6	52 028 DAX	PIPE w/SCREEN, oil return 3/8 x 7/8" hex-hd. cap SCREW 3/8" lock WASHER
7	272 459 R1	TUBE, lubricating oil pump oil inlet
8	46 053 D	PIN, lubricating oil pump auxiliary gear housing dowel

REF. NO.	PART NUMBER	DESCRIPTION

CRANKCASE OIL PAN AND LUBRICATING OIL PUMP
(TD-61) - Continued

9	51 047 D	GEAR, lubricating oil pump auxiliary idler
10	106 750	KEY, No. 6, 5/32 x 5/8" lubricating oil pump drive (Woodruff) (2)
11	264 056 R1	PINION, lubricating oil pump drive (12 T)
12	622 258 R1	PIN, lubricating oil pump drive pinion
13	255 092 R21	SHAFT w/PIN, 622 258 R1 and PIN, 553 686 R1, lubricating oil pump drive shaft
14	10 961 D	SCREW, lubricating oil pump body cap (2) 1/2" lock WASHER (2)
15	553 686 R1	PIN, lubrication oil pump body gear
16	260 718 R21	GEAR w/PIN, 553 686 R1, lubricating oil pump body
17	272 458 R11	HOUSING w/DOWEL, 46 053 D and TUBE, 272 459 R1, lubricating oil pump auxiliary gear
18	51 046 D	GEAR, lubricating oil pump, auxiliary body
19	51 044 DA	GASKET, lubricating oil pump cover
20	272 460 R1	COVER, oil pump lubricating 3/8 x 2" hex-hd. cap SCREW (4) 3/8" lock WASHER (4)
21	272 461 R11	PLATE, lubricating oil pump bottom 1/4 x 5/8" hex-hd. cap SCREW (3) 1/4" lock WASHER (3)
22	272 508 R91	PUMP ASSEMBLY, lubricating oil (Composed of -

1	BODY	272 506 R91
1	COVER	272 460 R1
2	GASKET	51 044 DA
1	GEAR	51 046 D
1	GEAR	51 047 D
§1	GEAR	
1	GEAR	52 027 DB
1	HOUSING	272 458 R11
2	KEY	106 750
1	PIN	553 686 R1
1	PIN	622 258 R1
§1	PINION	
1	PLATE	272 461 R11
§1	SHAFT	
1	SPRING	272 462 R1
1	VALVE	272 753 R1)

23	52 001 D	GASKET, crankcase oil pan
24	52 000 DXB	PAN w/GASKET, 59 658 D and PLUG, 261 750 R1, crankcase oil 3/8 x 1" hex-hd. cap SCREW (23) 3/8 x 1-1/4" hex-hd. cap SCREW (2) 3/8" lock WASHER (25)
25	59 658 D	GASKET, oil pan plug
26	261 750 R1	PLUG, crankcase oil pan drain
	143 162	PLUG, 3/8" sq-soc. pipe (lubricating oil pump body)
		WIRE, locking (16 ga. x 10" long) (lubricating oil pump body cap screw) (order 278 027 R1)
	278 027 R1	WIRE, locking (16 ga.) (customer must specify length required) (X)

X - As Required
§ - Not Furnished Separately

LUBRICATING SYSTEM

REF. NO.	PART NUMBER	DESCRIPTION

CRANKCASE OIL PAN
(TD-91)

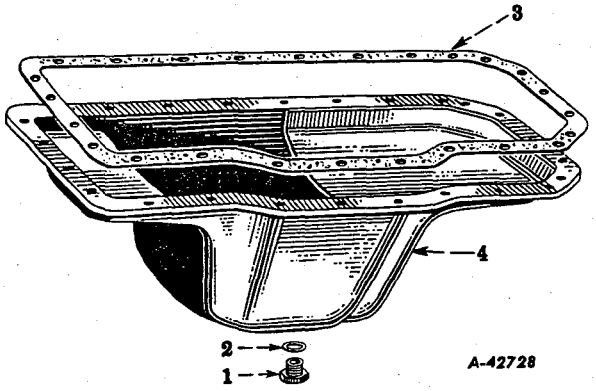

LUBRICATING SYSTEM

REF. NO.	PART NUMBER	DESCRIPTION

CRANKCASE OIL PAN
(TD-91) - Continued

1	261 750 R1	PLUG, crankcase oil pan drain
2	59 658 D	GASKET, crankcase oil pan drain plug
3	51 318 D	GASKET, crankcase oil pan
4	57 555 DB	PAN w/PLUG, 261 750 R1, and GASKET, 59 658 D, crankcase oil 3/8 x 1" hex-hd. cap SCREW (21) 3/8 x 1-1/4" hex-hd. cap SCREW (4) 3/8" lock WASHER (25)

LUBRICATING OIL PUMP AND ENGINE BALANCER
(TD-91)

LUBRICATING OIL PUMP AND ENGINE BALANCER
(TD-91) - Continued

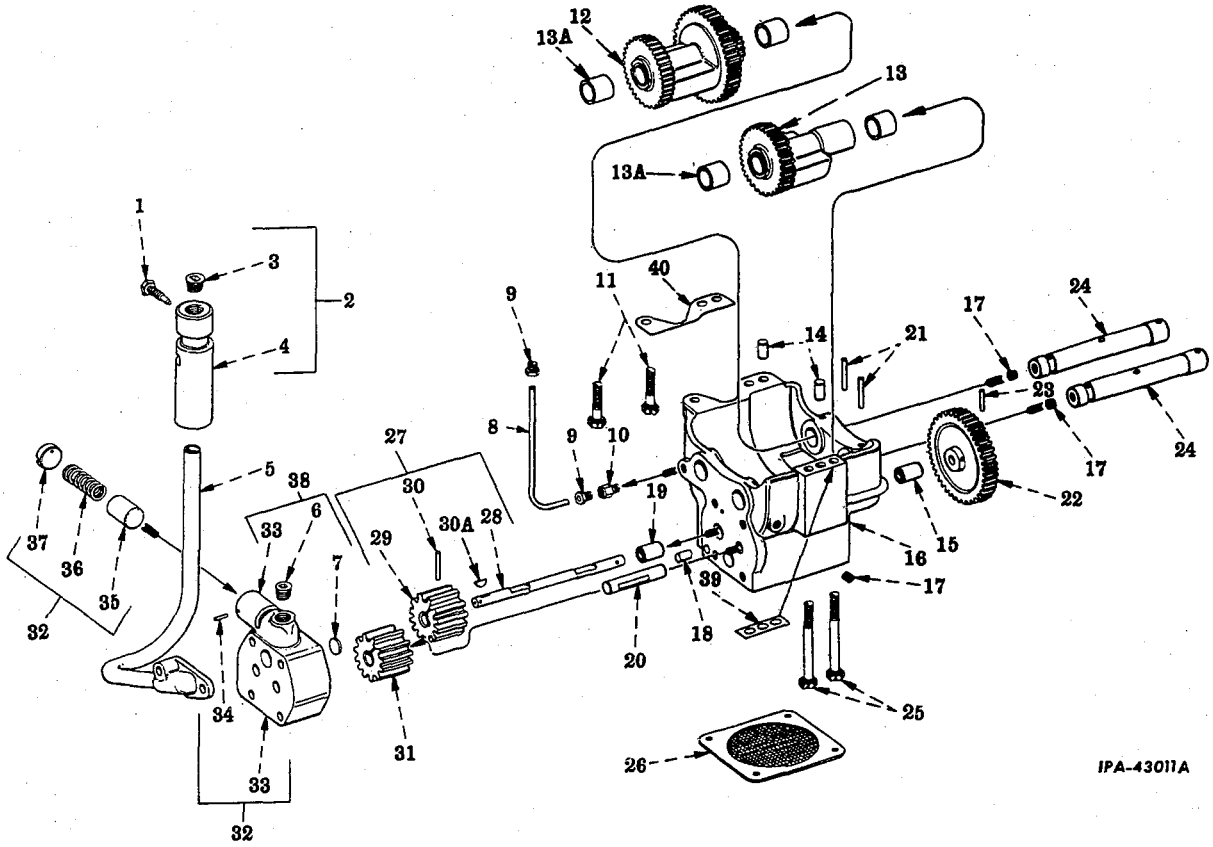

1	275 614 R1	SCREW, lubricating oil transfer housing 13/32 x 13/16 x .065" copper WASHER
2	275 613 R11	HOUSING w/PLUG, 116 566, lubricating oil transfer
3	116 566	PLUG, 1/2" sq-socket pipe
4	275 613 R1	HOUSING, lubricating oil transfer (order 275 613 R11)
5	275 615 R11	PIPE w/ELBOW, lubricating oil transfer 3/8 x 3" hex-hd. cap SCREW 3/8 x 3-3/4" hex-hd. cap SCREW 3/8" lock WASHER (2)

LUBRICATING SYSTEM

REF. NO.	PART NUMBER	DESCRIPTION
		LUBRICATING OIL PUMP AND ENGINE BALANCER (TD-91) - Continued
6	143 162	PLUG, 3/8" sq-socket pipe
7	172 531	PLUG, 3/4" expansion
8	275 630 R11	LINE w/two NUTS, 29 898 D, balancer pressure
9	29 898 D	NUT, balancer pressure line connector (2)
10	29 901 D	CONNECTOR, balancer pressure line
11	274 599 R1	SCREW, hex-hd. cap (short) (2) 1/2" lock WASHER (2)
12	275 627 R11	WEIGHT w/two BUSHINGS, driving balancer (order 277 752 R91) (TD-91M 501 to)
12	277 674 R11	WEIGHT w/two BUSHINGS, driving balancer (TD-91M - up)
13	275 628 R11	WEIGHT w/two BUSHINGS, driven balancer (order 277 753 R91) (TD-91M 501 to)
13	277 750 R11	WEIGHT w/two BUSHINGS, driven balancer TD-91M - up)
13A	276 789 R1	BUSHING, balancer weight (used with weight, 275 627 R11 and 275 628 R11) (4)
13A	277 754 R1	BUSHING, balancer weight (used with WEIGHT, 277 674 R11 and 277 750 R11) (4)
14	269 293 R1	PIN, balancer weight housing dowel (2)
15	276 790 R1	BUSHING, rear lubricating oil pump drive shaft (will work for 275 621 R1)
16	275 619 R1	HOUSING, balancer weight (order 275 619 R11)
17	50 410 DA	PLUG, 1/8" socket-hd. pipe NPT (balancer weight housing)
17	50 410 DA	PLUG, 1/8" socket-hd. pipe NPT (balancer weight shaft) (2)
18	46 052 D	PIN, lubricating oil pump body dowel
19	276 791 R1	BUSHING, lubricating oil pump drive shaft (front) (will work for 275 622 R1)
20	275 624 R1	SHAFT, lubricating oil pump idler
21	553 050 R1	PIN, 1/4 x 3/4" roll (2)
22	275 626 R2	GEAR, drive lubricating oil pump (order 276 799 R91) (TD-91M-501 to)
22	276 793 R2	GEAR, drive lubricating oil pump (used on units equipped with PACKAGE, 276 799 R92) (TD-91M up)
23	622 258 R1	PIN, 1/4 x 1-1/8" roll (used only w/GEAR, 276 793 R1, SHAFT, 276 792 R1 and KEY, 106 750)
23	279 679 R1	PIN, oil pump drive pinion (used only w/GEAR, 276 793 R2 and SHAFT, 276 792 R2)
24	275 629 R11	SHAFT w/PLUG, 50 410 DA, balancer weight (See NOTE) (TD-91M 501 to) (2)
24	277 751 R11	SHAFT w/PLUG, 50 410 DA, balancer weight (TD-91M up) (2)
25	275 623 R1	SCREW, hex-hd. cap (long) (2) 1/2" lock WASHER (2)
26	275 612 R11	PLATE, lubricating oil pump bottom 1/4 x 1/2" hex-hd. cap SCREW (4) 1/4" lock WASHER (4)
27	276 792 R21	SHAFT ASSEMBLY, lubricating oil pump drive (will work for 275 625 R11) (Composed of - 1 GEAR 260 718 R2 1 KEY 106 750 1 PIN 553 686 R1 1 PIN 279 679 R1 1 SHAFT 276 792 R2)

LUBRICATING SYSTEM

REF. NO.	PART NUMBER	DESCRIPTION
		LUBRICATING OIL PUMP AND ENGINE BALANCER (TD-91) - Continued
28	275 625 R2	SHAFT, lubricating oil pump drive (order 276 792 R1, 62 258 R1 and 553 686 R1) (TD-91M 501 to)
28	276 792 R2	SHAFT, lubricating oil pump drive (TD-91M - up)
29	52 026 DB	GEAR, lubricating oil pump body (12 T) (order 276 792 R11) (TD-91M - 501 to)
29	260 718 R2	GEAR, lubricating oil pump body (12 T) (used on units equipped w/SHAFT ASSEMBLY, 276 792 R11) (TD-91M - up)
30	553 686 R1	PIN, 3/16 x 1-1/2" roll
30A	106 750	KEY, 5/32 x 5/8" Woodruff
31	52 027 DB	GEAR, lubricating oil pump body idler (12 T)
32	275 608 R91	BODY ASSEMBLY, lubricating oil pump (Composed of - 1 BODY 275 609 R11 1 PIN 18 410 R1 1 RETAINER 275 611 R1 1 SPRING 275 610 R1 1 VALVE 272 753 R1) 3/8 x 2-3/4" hex-hd. cap SCREW (2)
33	275 609 R1	BODY, lubricating oil pump (order 275 609 R11)
34	18 410 R1	PIN, 1/8 x 3/4" roll
35	272 753 R1	VALVE, lubricating oil pump safety
36	275 610 R1	SPRING, lubricating oil pump safety valve
37	275 611 R1	RETAINER, lubricating oil pump safety valve spring
38	275 609 R11	BODY w/PLUG, 143 162 and 172 531, lubricating oil pump
39	276 489 R1	SHIM, left balancer weight housing (one required when used with 276 490 R1)
40	276 490 R1	SHIM, right balancer weight housing (one required when used with 276 489 R1)
	275 619 R11	HOUSING ASSEMBLY, balancer weight (Composed of - 1 BUSHING 275 621 R1 1 BUSHING 275 622 R1 §1 HOUSING 1 PIN 46 052 D 2 PIN 269 293 R1 1 PLUG 50 410 DA 1 SHAFT 275 624 R1)
	275 620 R93	HOUSING w/WEIGHT ASSEMBLY, balancer weight (Composed of - §1 GEAR 1 HOUSING 275 619 R11 2 PIN 553 050 R1 1 PIN 279 679 R1 §1 SHAFT 2 SHAFT 277 751 R11 1 WEIGHT 277 674 R11 1 WEIGHT 277 750 R11) NOTE - For units with WEIGHT, 275 627 R11 furnish service PACKAGE, 277 752 R91 or for units with WEIGHTS, 275 628 R11 furnish service PACKAGE, 277 753 R91.

§ - Not Furnished Separately

LUBRICATING SYSTEM

REF. NO.	PART NUMBER	DESCRIPTION
		LUBRICATING OIL PUMP AND ENGINE BALANCER
	276 799 R92	PACKAGE, oil pump drive gear and shaft field service (for service on units equipped with GEAR, 275 626 R1) (TD-91M 501 to) (Composed of - 1 GEAR 276 793 R1; 1 PIN 553 686 R1; 1 PIN 279 679 R1; 1 SHAFT 276 792 R2)
	277 752 R91	PACKAGE, balancer driving weight and shaft field service (consists of WEIGHT, 277 674 R11 and SHAFT, 277 751 R11) (TD-91M 501 to)
	277 753 R91	PACKAGE, balancer driven weight and shaft field service (consists of WEIGHT, 277 750 R11 and SHAFT, 277 751 R11) (TD91M 501 to)

AUXILIARY AND FINAL FUEL OIL FILTERS
(For engines equipped with IH Fuel Injection Pump) (TD-61 and TD-91)

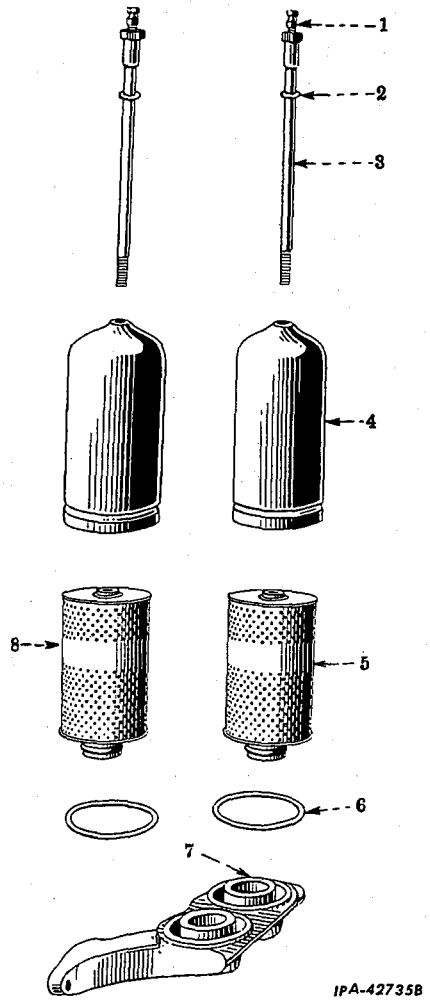

LUBRICATING SYSTEM

REF. NO.	PART NUMBER	DESCRIPTION
		LUBRICATING OIL PUMP AND ENGINE BALANCER — Continued
	106 750	KEY, 5/32 x 5/8" Woodruff (oil pump drive gear) (used only when using SHAFT, 276 792 R1, GEAR, 276 793 R1 and PIN, 622 258 R1)
		WIRE, locking, 16 ga. x 10" long (order 278 027 R1)
	278 027 R1	WIRE, bulk lock (16 ga.) (customer must specify length required) (X)
		X - As Required)

AUXILIARY AND FINAL FUEL OIL FILTERS
(For engines equipped with IH Fuel Injection Pump) (TD-61 and TD-91) - Continued

1	39 677 DA	BLEEDER, fuel oil filter (2) (TD-61M to and TD-91M 501 to 4546)
1	275 634 R1	VALVE, fuel oil filter bleeder (2) (TD-61M up and TD-91M 4547 up)
2	13 727 D	GASKET, fuel oil filter case stud (2) (TD-61M and TD-91M)
3	259 482 R91	STUD, fuel oil filter case (order 276 183 R91) (2) (TD-61M to and TD-91M 501 to 4546)
3	276 183 R91	SUTD, 275 881 R91, w/VALVE, 275 634 R1, fuel filter case (will work for 259 482 R91) (2) (TD-61M to and TD-91M 501 to 4546)
3	275 881 R91	STUD, fuel oil filter case (2) (TD-61M up and TD-91M 4547 up)
4	13 729 D	CASE, fuel oil filter (2) (TD-61M and TD-91M
5	259 479 R92	ELEMENT, auxiliary fuel oil filter (paper) (will work for 266 839 R91) (TD-61M and TD-91M)
5	279 980 R91	ELEMENT, auxiliary fuel oil filter (cotton) (TD-61M and TD-91M)
6	13 728 D	GASKET, fuel oil filter case (2) (TD-61M and TD-91M)
7	271 321 R2	BASE, fuel oil filter (TD-61M and TD-91M)
	273 036 R1	SCREW, 1/2 x 1-3/8" hex-hd. cap (2) 1/2" lock WASHER (2)
8	259 479 R92	ELEMENT, final fuel oil filter (paper) (will work for 266 839 R91) (TD-61M and TD-91M)

REF. NO.	PART NUMBER	DESCRIPTION

SPARK PLUGS, DISTRIBUTOR DRIVE AND BRACKET

-78-
ELECTRICAL SYSTEM
CARBURETED ENGINE (T-61)

REF. NO.	PART NUMBER	DESCRIPTION

SPARK PLUGS, DISTRIBUTOR DRIVE AND BRACKET — CONTINUED

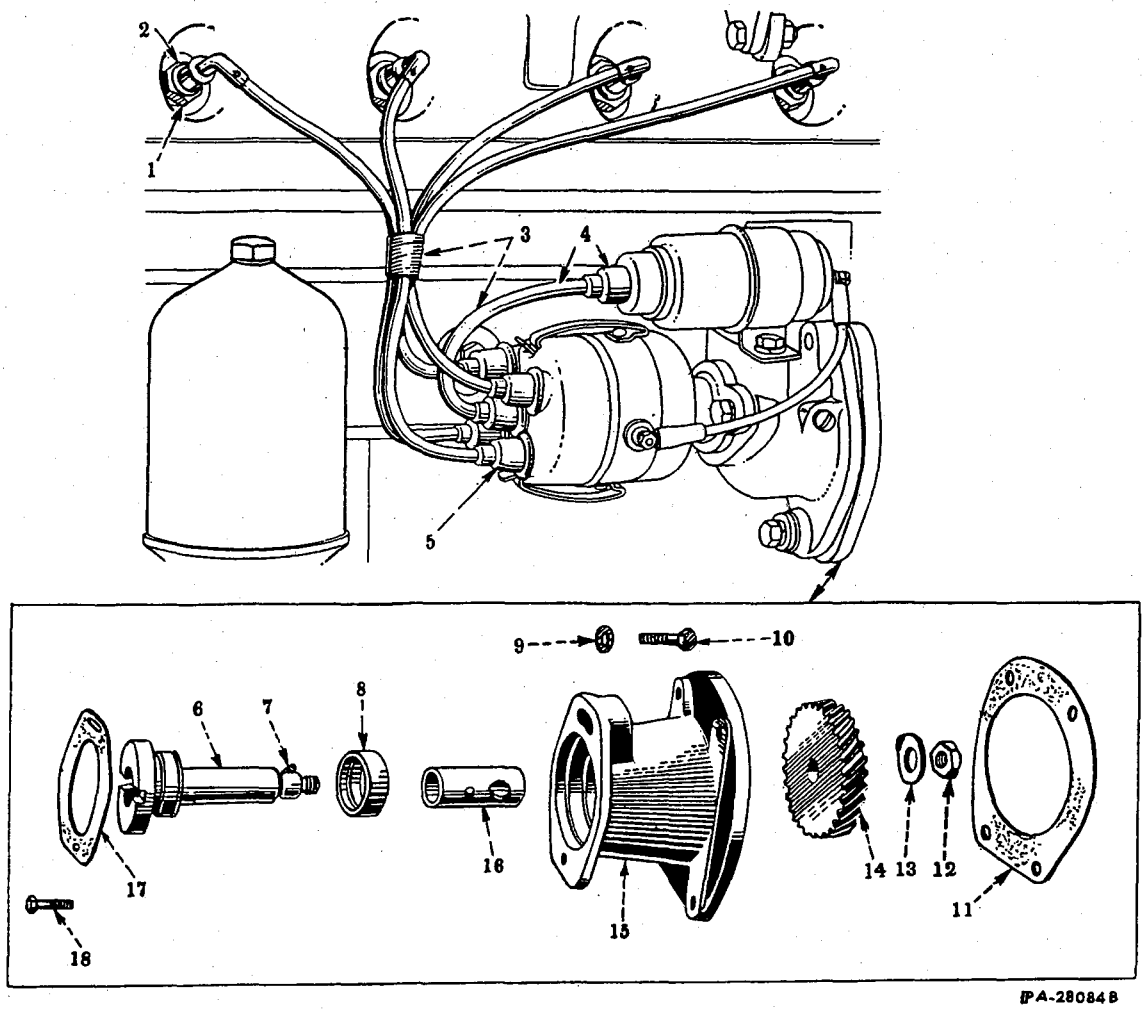

1	37 762 H	GASKET, spark plug (4)
2	360 942 R91	SPARK PLUG w/GASKET, 37 762 H (Champion) (Normal Service) (4)
2	353 982 R91	SPARK PLUG w/GASKET, 37 762 H (AC) (Normal Service) (4)
2	359 276 R91	SPARK PLUG w/GASKET, 37 762 H (Auto-Lite) (Normal Service) (4)
2	360 943 R91	SPARK PLUG w/GASKET, 37 762 H (Champion) (Mild Service) (4)
2	353 985 R91	SPARK PLUG w/GASKET, 37 762 H (AC) (Mild Service) (4)
2	359 277 R91	SPARK PLUG w/GASKET, 37 762 H (Auto-Lite) (Mild Service) (4)
2	365 479 R91	SPARK PLUG w/GASKET, 37 762 H (Champion) (Moderate Service) (4)
2	361 688 R91	SPARK PLUG w/GASKET, 37 762 H (Champion) (Severe Service) (4)
2	353 983 R91	SPARK PLUG w/GASKET, 37 762 H (AC) (Severe Service) (4)
2	359 275 R91	SPARK PLUG w/GASKET, 37 762 H (Auto-Lite) (Severe Service) (4)
2	361 686 R91	SPARK PLUG w/GASKET, 37 762 H (Champion) (Extremely Severe Service) (4)
2	353 986 R91	SPARK PLUG w/GASKET, 37 762 H (AC) (Extremely Severe Service) (4)
2	359 274 R91	SPARK PLUG w/GASKET, 37 762 H (Auto-Lite) (Extremely Severe Service) (4)
3	362 439 R91	PACKAGE, ignition cable service (consists of spark plug CABLE ASSEMBLY with CABLE, 356 686 R92 and four NIPPLE, 251 553 R1)
4	356 686 R92	CABLE w/two NIPPLE, 251 553 R1, coil to distributor secondary
5	251 553 R1	NIPPLE, spark plug cable (4)
6	352 079 R1	SHAFT, distributor drive (See NOTE) 5/8NF jam NUT
7	124 543	KEY, 1/8 x 1/2" (Woodruff) (distributor drive gear) (See NOTE) (will work for 106 749)

NOTE - Not used on tractors equipped with Hydraulic Remote Control

PRINTED IN UNITED STATES OF AMERICA

REF. NO.	PART NUMBER	DESCRIPTION

SPARK PLUGS, DISTRIBUTOR DRIVE AND BRACKET — Continued

8	352 080 R91	OIL SEAL, distributor drive shaft (optional with 358 839 R91) (See NOTE)
8	358 839 R91	OIL SEAL, distributor drive shaft (optional with 352 080 R91) (See NOTE)
9	24 523 D	WASHER, distributor bolt
10		SCREW, 3/8 x 1-7/8" hex-hd. cap (See NOTE) 3/8" lock WASHER
11	354 952 R2	GASKET, distributor bracket (See NOTE)
12		Follows reference No. 6
13	45 003 D	LOCK, distributor gear nut

BATTERY IGNITION UNIT
(For Tractors equipped with Battery Ignition)

-79-
ELECTRICAL SYSTEM
CARBURETED ENGINE (T-61)

REF. NO.	PART NUMBER	DESCRIPTION

SPARK PLUGS, DISTRIBUTOR DRIVE AND BRACKET — Continued

14	48 819 D	GEAR, distributor drive (29 T)
15	354 951 R11	BRACKET w/BUSHING, 24 473 DA and OIL SEAL, 352 080 R91, distributor (See NOTE) 3/8 x 1-3/8" hex-hd. cap SCREW (4) 3/8" lock WASHER (4)
16	24 473 DA	BUSHING, distributor shaft (See NOTE)
17	55 780 DD	GASKET, distributor flange
18		SCREW, 3/8 x 1-1/8" hex-hd. cap 3/8" lock WASHER

NOTE - Not used on tractors equipped with Hydraulic Remote Control

BATTERY IGNITION UNIT
(For Tractors equipped with Battery Ignition) - Continued

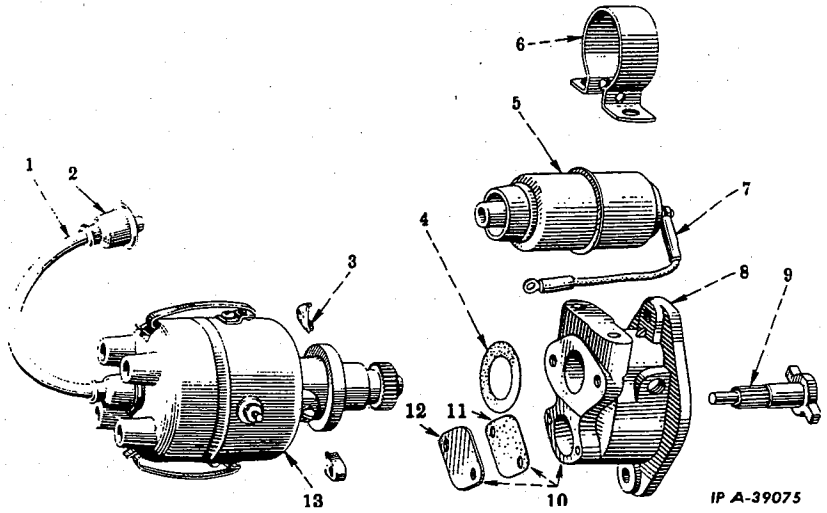

1	356 686 R92	CABLE w/two NIPPLE, 251 553 R1, coil to distributor secondary
2	251 553 R1	NIPPLE (2)
3	353 937 R1	CLAMP, distributor (2) 5/16 x 7/8" cd-pltd. hex-hd. cap SCREW (2) 5/16" cd-pltd. lock WASHER (2)
4	353 936 R2	GASKET, distributor
5	353 874 R91	COIL, ignition (6 volt) No. 10NF cd-pltd. NUT (2) No. 10NF cd-pltd. lock WASHER (2)
6	353 889 R1	CLAMP, coil No. 10 cd-pltd. sq. NUT 5/16 x 1/2" cd-pltd. hex-hd. cap SCREW (2) No. 10NF x 1-1/4" cd-pltd. slt-rd-hd. SCREW 5/16" cd-pltd. lock WASHER (2) No. 10 cd-pltd. lock WASHER 11/32 x 11/16" x No. 16 ga. cd-pltd. WASHER (2)
7	357 929 R92	CABLE w/two TERMINAL, coil to distributor primary
8	363 763 R11	HOUSING w/PLUG, 103 883 and BUSHING, distributor drive
9	353 934 R11	SHAFT w/integral GEAR (16 T), distributor drive
10	363 749 R91	HOUSING w/COVER, 363 764 R1, GASKET, 363 765 R1 and HOUSING, 363 763 R11, distributor drive
	103 883	PLUG, 1/8" slt-hdls. pipe 3/8 x 1-1/8" hex-hd. cap SCREW (lower) 3/8 x 1-7/8" hex-hd. cap SCREW (upper) (gasoline) 3/8" lock WASHER (gasoline) (2) 3/8" lock WASHER (distillate)
11	363 765 R1	GASKET, distributor drive housing hole cover
12	363 764 R1	COVER, distributor drive housing hole No. 10NF x 9/16" cd-pltd. slt-rd-hd. mach. SCREW (2) No. 10 cd-pltd. lock WASHER (2)
13	362 473 R91	DISTRIBUTOR ASSEMBLY (for components see list of parts under details of "Battery Ignition Distributor") (gasoline)
13	357 935 R91	DISTRIBUTOR ASSEMBLY (for components see list of parts under details of "Battery Ignition Distributor") (distillate)

PRINTED IN UNITED STATES OF AMERICA

REF. NO.	PART NUMBER	DESCRIPTION

BATTERY IGNITION DISTRIBUTOR

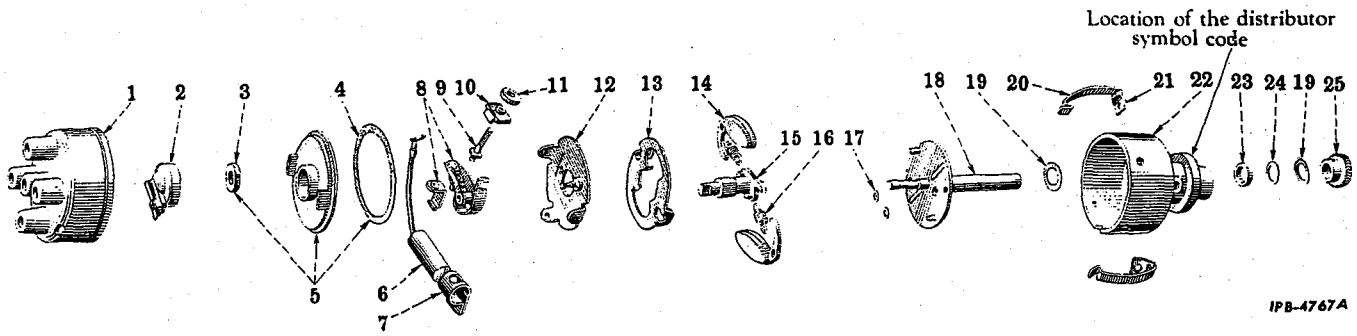

	357 935 R91	DISTRIBUTOR ASSEMBLY (distillate)
	362 473 R91	DISTRIBUTOR ASSEMBLY (gasoline)
1	351 693 R92	CAP, distributor
2	353 896 R91	ROTOR, distributor
3	353 901 R2	SEAL, breaker cover felt
4	352 284 R2	GASKET, breaker cover
5	353 900 R11	COVER w/SEAL, 353 901 R2 and GASKET, 352 284 R2, breaker
6	353 903 R92	CONDENSER
7	353 905 R1	CLAMP, condenser No. 8 x 3/16" cd-pltd. slt-fil-hd. SCREW No. 8 cd-pltd. lock WASHER
8	353 172 R91	POINT SET, distributor No. 8 x 3/16" cd-pltd. slt-pan-hd. SCREW WASHER, stationary point and terminal (3)
9	353 907 R1	SCREW, terminal No. 8 cd-pltd. NUT (3) No. 8 cd-pltd. lock WASHER (3)
10	353 906 R1	INSULATOR, terminal spring anchor
11	251 538 R1	WASHER, terminal insulating
12	352 277 R11	PLATE, breaker No. 8 x 3/8" cd-pltd. slt-rd-hd. SCREW No. 8 cd-pltd. lock WASHER
13	352 301 R1	GUARD, governor weight No. 8 x 3/16" cd-pltd. slt-fil-hd. SCREW (2) No. 8 cd-pltd. lock WASHER (2)
14	353 915 R91	ARM, weight (counterclockwise rotation) (2)
15	355 724 R91	CAM w/FELT, 355 460 R1
16	358 108 R91	SPRING, governor (set of two) (distillate)
16	362 478 R91	SPRING, governor (set of two) (gasoline)
17	352 293 R1	SPACER, weight arm (4)
18	354 901 R91	SHAFT, distributor (distillate)
18	362 474 R91	SHAFT, distributor (gasoline)
19	352 298 R1	WASHER, distributor thrust (2)
20	353 894 R1	SPRING, distributor cap (2)

ALWAYS give DISTRIBUTOR NUMBER when ordering PARTS

-80-
ELECTRICAL SYSTEM
CARBURETED ENGINE (T-61)

REF. NO.	PART NUMBER	DESCRIPTION

BATTERY IGNITION DISTRIBUTOR — CONTINUED

21	353 895 R1	SUPPORT, distributor cap spring (2) No. 8 x 3/8" cd-pltd. slt-rd-hd. SCREW (2) No. 8 cd-pltd. lock WASHER (2)
22	353 898 R11	HOUSING w/OIL SEAL, 252 739 R1, RETAINER, 353 899 R1 and PLUG, 125 947, distributor
	125 947	PLUG, 1/8" slt. cd-pltd. pipe
23	353 899 R1	RETAINER, distributor shaft oil seal
24	252 739 R1	OIL SEAL, distributor shaft
25	353 902 R1	GEAR, distributor
	354 552 R1	PIN, distributor gear
	355 460 R1	FELT, cam oil hole

ALWAYS give DISTRIBUTOR NUMBER when ordering PARTS

MAGNETO, International Type H-4

-81-
ELECTRICAL SYSTEM
CARBURETED ENGINE (T-61)

MAGNETO, International Type H-4 - Continued

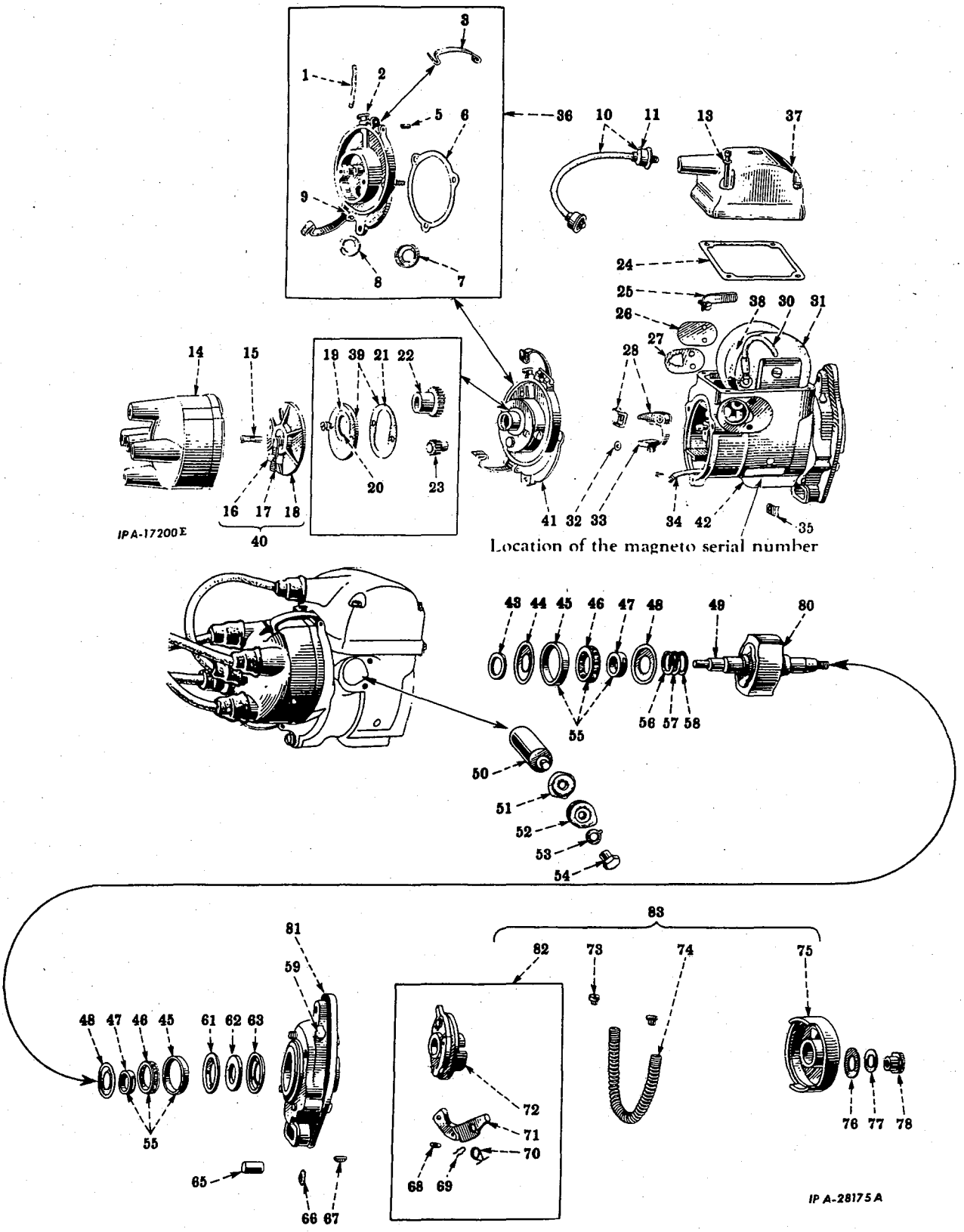

PRINTED IN UNITED STATES OF AMERICA

ELECTRICAL SYSTEM
CARBURETED ENGINE (T-61)

MAGNETO, International Type H-4 - Continued

REF. NO.	PART NUMBER	DESCRIPTION
	351 218 R92	MAGNETO ASSEMBLY (clockwise looking from drive end) 3/8 x 1-1/2" hex-hd. cap SCREW (2) 3/8 x 1-7/8" hex-hd. cap SCREW 3/8" lock WASHER (2)
	24 523 D	WASHER, magneto bolt (2)
1	E4 216	FELT, oil well
2	E4 295	OILER
3	51 666 D	SPRING, distributor cap (2)
5	47 424 D	PIN, distributor cap locating
6	47 408 D	GASKET, distributor body
7	49 424 D	RETAINER, distributor body felt seal
8	49 423 D	SEAL, distributor body felt
9	51 667 D	PIN, distributor cap spring (2)
10	356 686 R91	CABLE w/two TERMINAL, coil to distributor
11	251 553 R1	NIPPLE, coil to distributor cable (2)
13	38 609 DA	WASHER, coil cover mounting (4)
14	47 413 DXC	CAP, distributor
14	47 413 DYC	CAP, 47 413 DXC, w/BRUSH, 21 350 DXA or 32 032 DXA, distributor
15	21 350 DXA	BRUSH w/SPRING, distributor (optional with 32 032 DXA or 356 622 R11)
15	32 032 DXA	BRUSH w/SPRING, distributor (optional with 21 350 DXA or 356 622 R11)
15	356 622 R11	BRUSH w/SPRING, distributor (optional with 21 350 DXA or 32 032 DXA)
16	47 427 D	NUT, distributor rotor No. 6 cd-pltd. lock WASHER (light)
17	47 428 D	ARM, distributor
18	47 425 DX	ROTOR, distributor
19	49 417 D	RETAINER, distributor gear cover felt seal
20	49 418 D	SEAL, distributor gear cover felt
21	49 419 D	GASKET, distributor gear cover
22	49 420 DX	GEAR, distributor (24 T)
23	47 417 DX	PINION, rotor
24	47 453 D	GASKET, coil cover
25	47 452 D	STRAP, secondary leadout No. 4NF x 5/16" slt-pan-hd. SCREW No. 4 cd-pltd. lock WASHER (heavy)
26	55 015 D	COVER, condenser hole No. 8 x 3/8" cd-pltd. slt-rd-hd. SCREW (2) No. 8 cd-pltd. lock WASHER (2)
27	48 472 DA	GASKET, condenser hole cover
28	353 171 R91	PACKAGE, breaker arm and stationary point field service No. 8 x 5/16" cd-pltd. slt-pan-hd. SCREW
30	47 442 D	TUBE, primary to condenser leadout
31	49 593 D	INSULATOR, coil end (2)
32	21 394 D	WASHER, stationary point support
33	47 432 D	ANCHOR, spring No. 8 cd-pltd. NUT No. 8 x 3/8" cd-pltd. slt-fil-hd. SCREW No. 8 cd-pltd. lock WASHER
34	47 433 DX	CABLE, primary leadout

ALWAYS give MAGNETO NUMBER when ordering PARTS

-82-

ELECTRICAL SYSTEM
CARBURETED ENGINE (T-61)

MAGNETO, International Type H-4 - Continued

REF. NO.	PART NUMBER	DESCRIPTION
35	48 339 D	CLIP, condenser No. 8 x 1-1/4" cd-pltd. slt-fil-hd. SCREW No. 8 cd-pltd. lock WASHER
36	6 483 DAY	BODY ASSEMBLY, distributor (Composed of - §1 BODY 1 FELT E4 216 1 GASKET 47 408 D 1 OILER E4 295 1 PIN 47 424 D 2 PIN 51 667 D 1 RETAINER 49 424 D 1 SEAL 49 423 D §1 SHAFT 2 SPRING 51 666 D)
37	47 449 DAY	COVER w/STRAP, coil No. 8 x 1-1/2" cd-pltd. slt-fil-hd. SCREW (4)
38	21 314 DX	CORE, coil
38	47 439 DAX	COIL, 57 926 DX and CORE, 21 314 D
38	57 926 DX	COIL w/two INSULATOR, 49 593 D and TUBE, 47 442 D
39	49 416 DX	COVER ASSEMBLY, distributor gear (Composed of - §1 COVER 1 GASKET 49 419 D 1 RETAINER 49 417 D 1 SEAL 49 418 D) No. 8 x 1/2" cd-pltd. slt-rd-hd. SCREW (2) No. 8 cd-pltd. lock WASHER (2)
40	47 425 DY	ROTOR, 47 425 DX, ARM, 47 428 DA and NUT, 47 427 D
41	56 066 DA	DISTRIBUTOR ASSEMBLY (Composed of - 1 BODY 6 483 DAY 1 COVER 49 416 DX 1 GEAR 49 420 DX 1 PINION 47 417 DX) No. 10NF x 3/4" cd-pltd. slt-fil-hd. SCREW (3) No. 10 cd-pltd. lock WASHER (3)
42	6 482 DAY	FRAME ASSEMBLY (Composed of - 1 COVER 55 015 D 1 FELT E4 226 §1 FRAME 1 GASKET 48 472 DA §1 POST 1 RACE ST 601 1 RETAINER 47 454 D)
43	E 4 226	FELT, bearing
44	47 454 D	RETAINER, inner bearing felt
45	ST 601	RACE, outer rotor shaft ball bearing (2)
46	ST 602	RETAINER w/BALLS, rotor shaft ball bearing (2)
47	ST 600	RACE, inner rotor shaft ball bearing (2)
48	E4A 324	FLINGER, oil (2)
49	60 094 D	CAM, breaker
50	21 409 DB	CONDENSER
51	47 438 DA	WASHER, inner short circuiting terminal
52	48 341 D	WASHER, outer short circuiting terminal

§ - Not Furnished Separately
X - As Required

ALWAYS give MAGNETO NUMBER when ordering PARTS

PRINTED IN UNITED STATES OF AMERICA

MAGNETO
(Wico Electric Company)

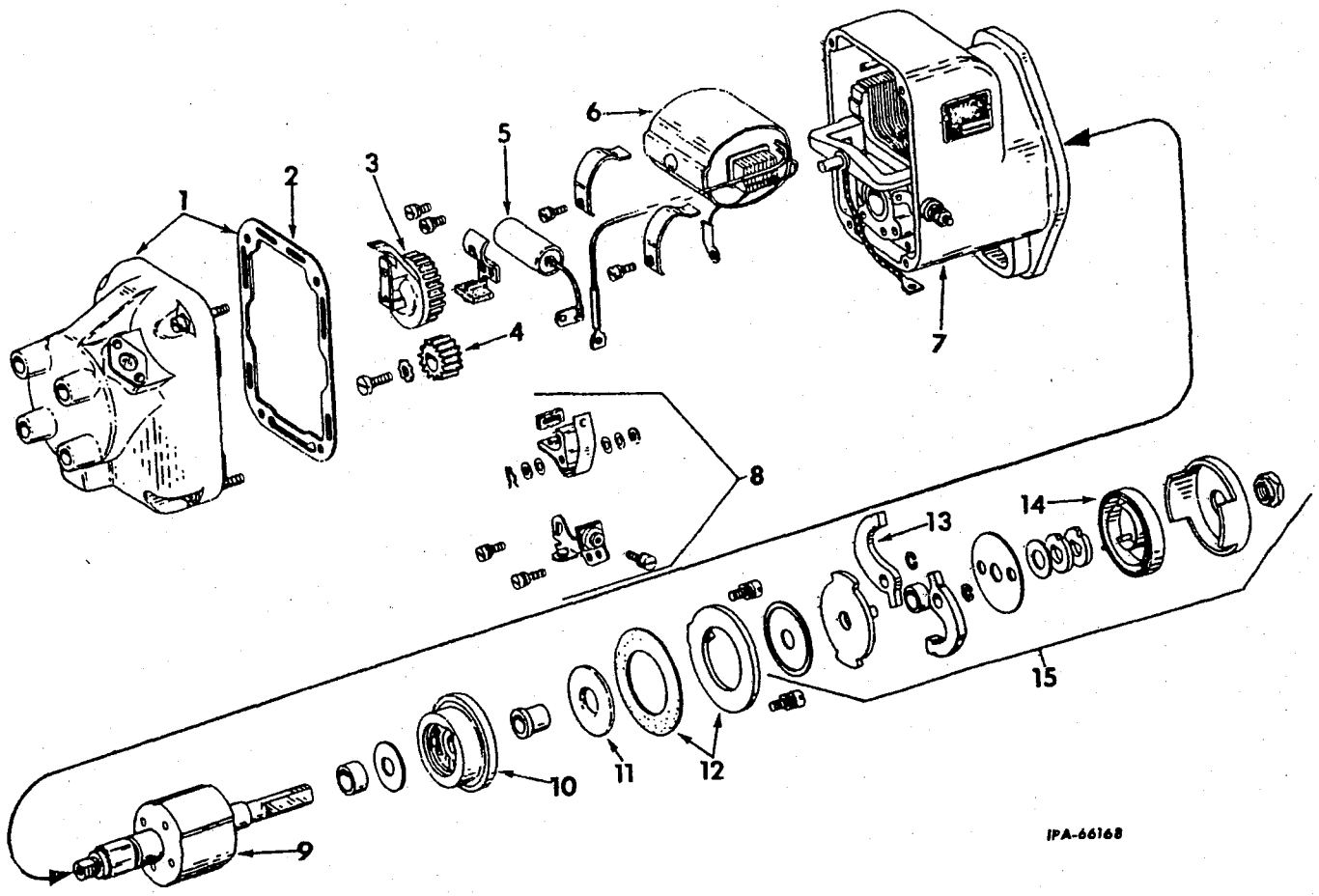

Ref. No.	IH Part Number	Mfr's. Number	Description	No. Req'd.
	374 867 R91	XHD-2657	MAGNETO, assembly (will work for 351 218 R91) ⊗ (Consists of the following parts -	1
1	375 302 R91	X-5777	CAP, distributor, assembly	1
2	375 303 R1	5618	GASKET, distributor cap	1
3	375 304 R91	X-9564	ARM, distributor, assembly	1
4	375 307 R1	6865	GEAR, pinion	1
5	375 306 R91	X-6916	CONDENSER	1
6	375 305 R91	X-6936B	COIL	1
7	375 309 R91	6950	HOUSING, assembly	1
8	375 308 R91	X-6942	BREAKER POINT SET	1
9	375 310 R1	Y-6911	ROTOR	1
10	375 312 R91	X-5521	CAGE, bearing, assembly	1
11	375 313 R1	6199	OIL SEAL	1
12	375 314 R91	X-5549	STOP, impulse, assembly	1
13	375 320 R1	A-179X	ARM, trip	2
14	375 321 R1	15-186	SPRING, drive	1
15	375 317 R91	X-8903	COUPLING, impulse, assembly	1
			⊗ - Parts illustrated without reference numbers are not furnished separately.	

ELECTRICAL SYSTEM
CARBURETED ENGINE (T-61)

REF. NO.	PART NUMBER	DESCRIPTION
		MAGNETO, International Type H-4 - Continued
53	48 342 DA	WASHER, short circuiting terminal lock
54	48 340 DA	TERMINAL, short circuiting No. 10NF x 5/16" cd-pltd. slt-fil-hd. SCREW No. 10 cd-pltd. lock WASHER
55	ST 307	BEARING, rotor shaft ball (2)
56	E4A 305	SHIM, rotor (light) (X)
57	E4 212	SHIM, rotor (medium) (X)
58	E4A 372	SHIM, rotor (heavy) (X)
59	27 311 D	OILER, impulse coupling
61	47 474 D	WASHER, inner oil retainer (order 353 051 R91)
62	47 475 D	OIL SEAL (order 353 051 R91)
63	47 473 D	WASHER, outer oil retainer (order 353 051 R91)
65	47 468 DA	PIN, impulse coupling stop
66		WASHER, 1/4" external-tooth-csk. lock
67	106 749	KEY, No. 3, 1/8 x 1/2" (Woodruff)
68	47 461 D	WASHER, pawl pin
69	47 462 D	RING, pawl pin snap (2)
70	51 303 D	SPRING, pawl (2)
71	51 304 D	PAWL (2)
72	47 293 DX	MEMBER, magneto
73	251 555 R1	BUTTON, spring end (2)
74	47 822 D	SPRING, magneto coupling
75	47 292 DX	MEMBER, drive
76	24 603 D	WASHER, magneto drive member lock
77	251 591 R1	WASHER, 1/2" cd-pltd. impulse coupling lock
78	47 470 D	NUT, impulse coupling
80	47 455 DAR	ROTOR ASSEMBLY (Composed of - 1 CAM 60 094 D 2 FLINGER E4A 324 1 KEEPER 57 314 D 1 KEY 106 749 2 RACE ST 600 2 RETAINER ST 602 §1 ROTOR X SHIM E4 212 X SHIM E4A 305 X SHIM E4A 372)
81	6 515 DAX	FLANGE ASSEMBLY, mounting (Composed of - §1 FLANGE 1 OILER 27 311 D §1 OIL SEAL 1 PIN 47 468 DA 1 RACE ST 601 §1 WASHER §1 WASHER) 1/4 x 9/16" slt-fil-hd. SCREW (4)
82	47 293 DY	MEMBER w/PAWLS ASSEMBLY, magneto (Composed of - 1 MEMBER 47 293 DX 1 PAWL 51 304 D 2 RING 47 462 D 2 SPRING 51 303 D 1 WASHER 47 461 D)

ALWAYS give MAGNETO NUMBER when ordering PARTS

ELECTRICAL SYSTEM
CARBURETED ENGINE (T-61)

REF. NO.	PART NUMBER	DESCRIPTION
		MAGNETO, International Type H-4 - Continued
83	47 293 DZ	UNIT ASSEMBLY, rotating (Composed of - 2 BUTTON 251 555 R1 1 MEMBER 47 292 DX 1 MEMBER 47 293 DY 1 SPRING 47 822 D)
	21 314 D	CORE
	65 064 DA	GAGE, breaker point and spark plug gap
	57 314 D	KEEPER, magneto
	353 051 R91	PACKAGE, oil seal field service (Composed of - §1 SEAL §1 SHIM 2 SHIM E4 212 2 SHIM E4A 305 2 SHIM E4A 372 §1 WASHER §1 WASHER)
	69 398 D	VARNISH, electrical insulating (one pint) (furnished when ordered) (X)

§ - Not Furnished Separately
X - As Required

ALWAYS give MAGNETO NUMBER when ordering PARTS

BATTERY IGNITION PUSH PULL SWITCH

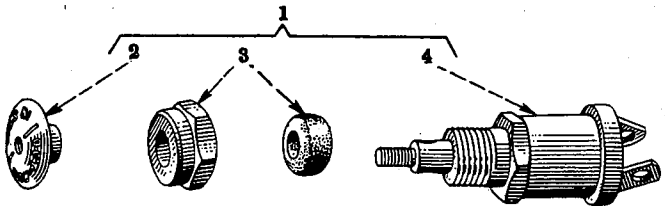

IP A-22770A

1	62 801 DC	SWITCH ASSEMBLY, battery ignition
	64 022 H	SCREW, No. 8 x 5/16" slt-special-hd. cd-pltd. (2) No. 8 cd-pltd. lock WASHER (2)
2	8 732 D	KNOB, switch No. 10 cd-pltd. lock WASHER
3	56 517 DX	NUT w/SEAL, mounting switch 9/16" cd-pltd. internal-tooth lock WASHER
4		SWITCH, battery ignition (order 62 801 DC)
	57 937 D	SPACER, battery ignition switch

REF. NO.	PART NUMBER	DESCRIPTION

BATTERY IGNITION LOCK SWITCH
(Delco-Remy)

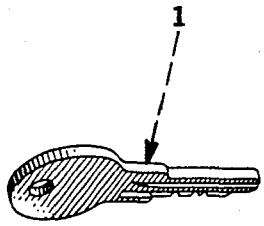

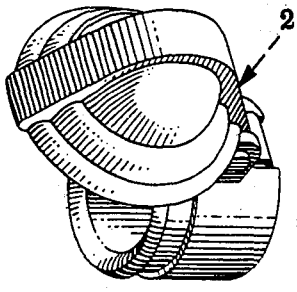

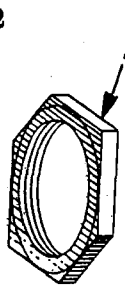

	257 911 R91	ATTACHMENT, ignition lock switch (See NOTE)
1		KEY (order 1842770)
2		NUT w/hinge PIN and SPRING, mounting (1923400)
3		NUT (1923405)
4		LOCK w/two KEYS (1842770)
5		BODY, switch (order 263 524 R92)
6		SCREW, terminal (1864099) (3)
7		CLIP, lock (terminal) (1855978) (3)

ALWAYS give SWITCH NUMBER when ordering PARTS

MAGNETO IGNITION SWITCH
(For Tractors equipped with Magneto Ignition)

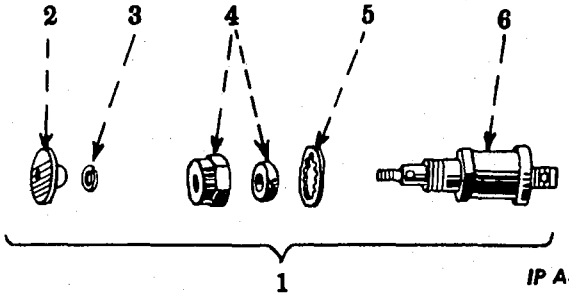

IP A-38640

-84-
ELECTRICAL SYSTEM
CARBURETED ENGINE (T-61)

REF. NO.	PART NUMBER	DESCRIPTION

BATTERY IGNITION LOCK SWITCH
(Delco-Remy) - Continued

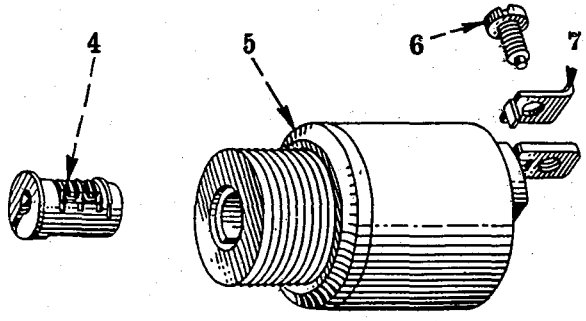

IPA-42144

	263 524 R92	SWITCH ASSEMBLY, ignition lock (1116513) (Composed of -	
	§1	BODY	
	3	CLIP	1855978
	1	LOCK	1842770
	1	NUT	1923400
	1	NUT	1923405
	3	SCREW	1864099)
	275 912 R1	BRACKET, mounting ignition lock switch	
	263 692 R1	COVER, ignition switch (rubber)	
	432 482	PLUG, ignition switch hole (5/8" button plug)	

§ - Not Furnished Separately
NOTE - Factory Application - Order on machine order form.
Field Application - Order through regular service parts channels.

ALWAYS give SWITCH NUMBER when ordering PARTS

MAGNETO IGNITION SWITCH
(For Tractors equipped with Magneto Ignition) - Continued

1	54 207 DB	SWITCH ASSEMBLY, magneto ignition
2	8 732 D	KNOB, switch
3		WASHER, No. 10 cd-pltd. medium lock
4	56 517 DX	NUT w/SEAL, mounting magneto ignition switch
5		WASHER, 9/16" internal-tooth cd-pltd. lock
6		SWITCH, magneto ignition (Not Furnished Separately - order Switch Assembly)
	64 022 H	SCREW, ignition switch terminal No. 8 cd-pltd. lock WASHER

REF. NO.	PART NUMBER	DESCRIPTION

GENERATOR AND CONNECTIONS
(Delco-Remy)

-85-
ELECTRICAL SYSTEM
CARBURETED ENGINE (T-61)

REF. NO.	PART NUMBER	DESCRIPTION

GENERATOR AND CONNECTIONS
(Delco-Remy) - Continued

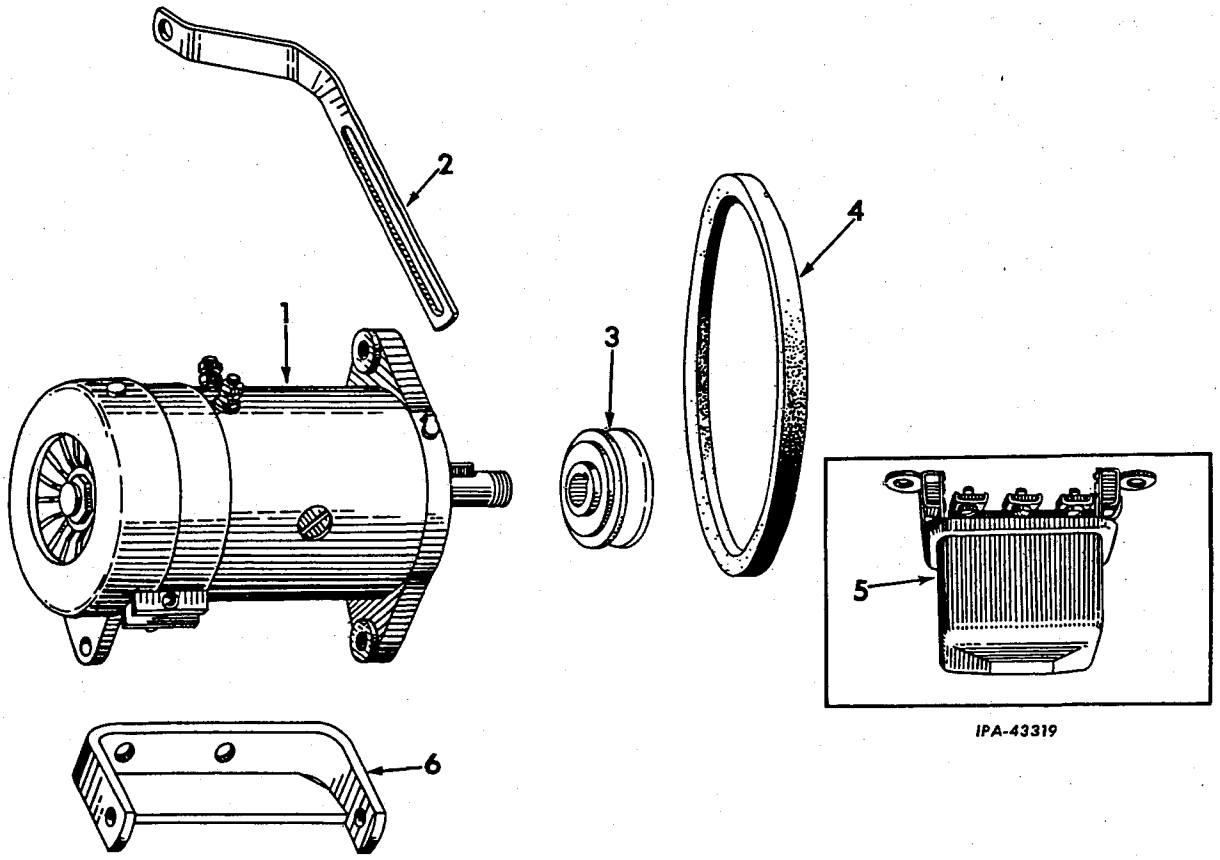

IPA-43319

1	275 388 R91	GENERATOR ASSEMBLY w/o PULLEY (Delco-Remy 1105018) (for components see list of parts under detail of "Generator") 3/8 x 1-1/4" hex-hd. cap SCREW (2) 3/8" lock WASHER (2)
2	275 386 R1	BRACE, generator 5/16 x 5/8" hex-hd. cap SCREW 3/8 x 7/8" hex-hd. cap SCREW 13/32 x 13/16" x No. 16 ga. WASHER 5/16" lock WASHER 3/8" lock WASHER
3	273 226 R1	PULLEY, generator
4	54 867 D	BELT, generator
5	275 379 R91	REGULATOR, voltage (Delco-Remy 1119176) (for components see list of parts under detail of "Voltage Regulator") 1/4NF NUT (4) 1/4 x 1-1/4" slt-rd-hd. mach. SCREW (4) 1/4" internal-tooth lock WASHER (4)
6	275 384 R11	BRACKET, generator 7/16 x 1-3/8" hex-hd. cap SCREW (2) 7/16" lock WASHER (2)

ALWAYS give GENERATOR NUMBER when ordering PARTS

ALWAYS give GENERATOR NUMBER when ordering PARTS

PRINTED IN UNITED STATES OF AMERICA

REF. NO.	MFR'S. NUMBER	DESCRIPTION

GENERATOR
(Delco-Remy) (6 Volt)

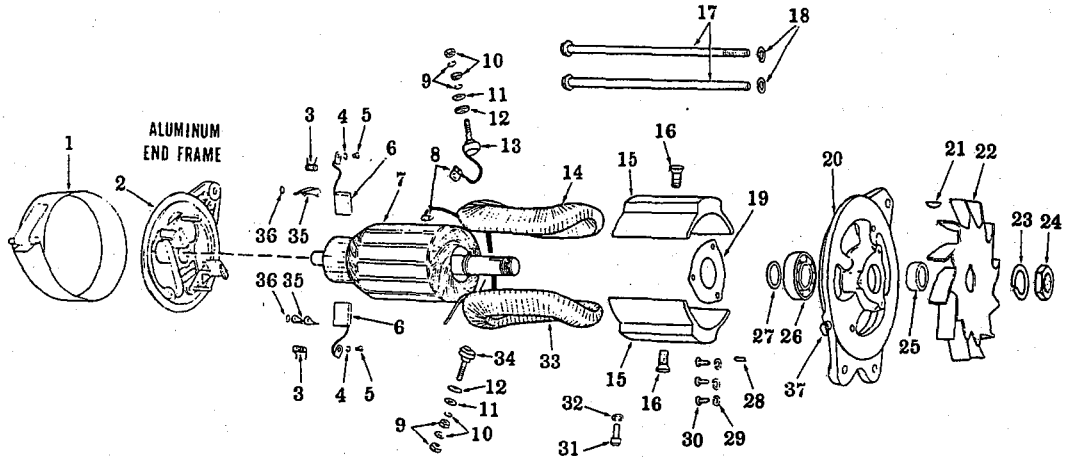

IPA-43015

	1105018	GENERATOR ASSEMBLY (I.H. Part No. 275 388 R91) 3/8 x 1-1/4" hex-hd. cap SCREW (2) 3/8" lock WASHER (2)
1	1879530	BAND, cover
	132923	SCREW, cover band attaching
	34816	NUT, cover band attaching screw
2	1937217	FRAME, commutator end and brush holder
3	1878184	SPRING, brush (2)
4	1904377	WASHER, attaching brush lead lock (2)
5	141541	SCREW, brush lead attaching (2)
6	1906965	BRUSH (2)
7	1937213	ARMATURE
8	200362	CLIP, terminal to brush
9	1904661	WASHER, terminal stud lock (2)
10	121743	NUT, terminal stud (2)
11	1881409	WASHER, terminal stud (2)
12	1902746	WASHER, insulator (2)
13	1858751	STUD, terminal
14	1918002	COIL, RH field
15	1918004	SHOE, pole (2)
16	1883864	SCREW, pole shoe (2)
17	809763	BOLT, thru (2)
18	120638	WASHER, thru bolt lock (2)
19	1911263	PLATE, ball bearing retainer drive end
20	1936333	FRAME, drive end
21	124545	KEY, drive end (Woodruff)
22	1937227	FAN, commutator end

ALWAYS give GENERATOR NUMBER when ordering PARTS

-86-
ELECTRICAL SYSTEM
CARBURETED ENGINE (T-61)

REF. NO.	MFR'S. NUMBER	DESCRIPTION

GENERATOR
(Delco-Remy) (6 Volt) - Continued

23	804000	WASHER, shaft nut lock
24	806915	NUT, shaft
25	1858603	COLLAR, space (outside drive end)
26	900529	BEARING, drive end ball
27	809945	WASHER, space (inside drive end)
28	809062	PIN, drive end dowel
29	1880781	WASHER, ball bearing retainer plate attaching screw lock (3)
30	1904370	SCREW, ball bearing retainer plate attaching (3)
31	131238	SCREW, frame
32	120380	WASHER, frame lock
33	1918003	COIL, LH field
34	1858751	STUD, terminal
35	1878183	ARM, brush (2)
36	1857412	WASHER, space brush arm (2)
	900529	BEARING, commutator end ball
	1913689	COLLAR, fan
	1937219	COVER, commutator end
	1929959	CLAMP, bearing retainer
	1885090	INSULATOR, terminal (2)
	427261	KEY, commutator end (Woodruff)
	806915	NUT, fan attaching commutator end
	132100	SCREW, cover attaching commutator end (3)
	1913688	SPACER, fan
	1880781	WASHER, cover attaching screw lock (3)
	1913743	WASHER, commutator end fan attaching nut lock
	809945	WASHER, space commutator end

ALWAYS give GENERATOR NUMBER when ordering PARTS

REF. NO.	MFR'S. NUMBER	DESCRIPTION

VOLTAGE REGULATOR
(Delco-Remy) (6 Volt 30 amp.)

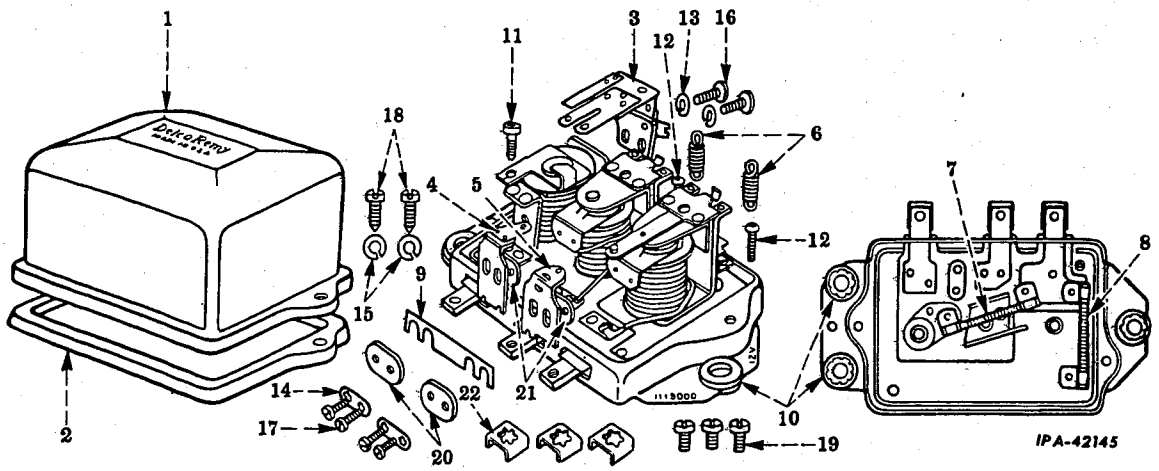

	1119176	REGULATOR ASSEMBLY, voltage (I.H. Part No. 275 379 R91) 1/4NF NUT (4) 1/4NF x 1-1/4" slt-rd-hd. machine SCREW (4) 1/4" lock WASHER
1	1931886	COVER
2	1931887	GASKET, cover
3	1878467	ARMATURE, relay
4	1878493	CONTACT and SUPPORT, current regulator
5	1933242	CONTACT and SUPPORT, voltage regulator
6	1912176	SPRING, regulator armature (2)
7	1885296	RESISTOR, "F" terminal to relay
8	1885296	RESISTOR, "F" terminal to ground
9	1878504	CONNECTOR, regulator contact attaching screw
10	1879663	GROMMET, in base (rubber) (3)
11	1912159	SCREW, relay armature adjusting (2)
12	1922408	SCREW, regulator armature adjusting (2)
13	1904377	WASHER, relay armature attaching screw lock (2)
14	1878505	WASHER, regulator contact attaching screw lock (2)
15	1904376	WASHER, cover screw lock (2)
16	1924764	SCREW, relay armature attaching (2)
17	1878516	SCREW, regulator contact attaching (4)
18	273798	SCREW, cover (2)
19	1878502	SCREW, terminal (3)
20	1922599	INSULATOR, regulator contact attaching screw (2)

ALWAYS give VOLTAGE REGULATOR NUMBER when ordering PARTS

REF. NO.	MFR'S. NUMBER	DESCRIPTION

VOLTAGE REGULATOR
(Delco-Remy) (6 Volt 30 amp.) - Continued

21	1878507	WASHER, insulator regulator contact attaching screw (2)
22	1878503	CLAMP, terminal (3)
	1911033	LEAD, ground
	124818	NUT, shock mounting attaching screw (3)
	273484	SCREW, shock mounting attaching (3)
	1911028	SHOCK, mounting (three hole)
	1911034	SHOCK, mounting (four hole)
	1874495	WASHER, shock mounting attaching screw lock (3)

ALWAYS give VOLTAGE REGULATOR NUMBER when ordering PARTS

REF. NO.	MFR'S. NUMBER	DESCRIPTION

STARTING SWITCH
(Delco-Remy)

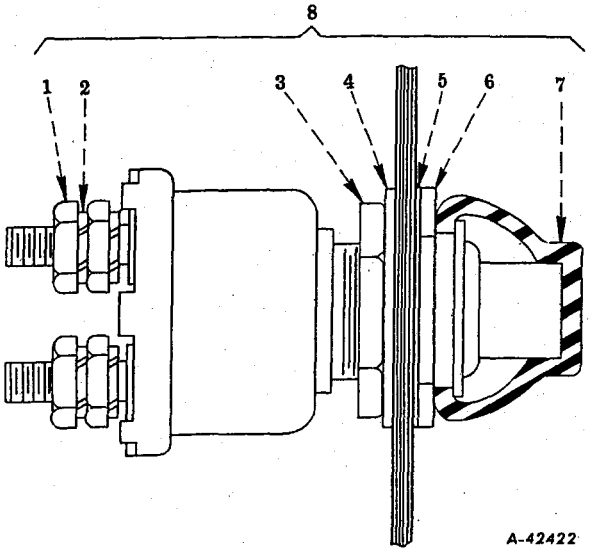

-88-

CARBURETED ENGINE (T-61)

REF. NO.	MFR'S. NUMBER	DESCRIPTION

STARTING SWITCH
(Delco-Remy) - Continued

1	120614	NUT, terminal (2)
2	120217	WASHER, terminal lock (2)
3	1855936	NUT, inner mounting
4	138557	WASHER, mounting nut lock
5	1913828	WASHER, mounting nut
6	1903896	NUT, outer mounting
7	1914549	BOOT
8	1996080	SWITCH ASSEMBLY, starting (I.H. Part No. 271 179 R91)

ALWAYS give SWITCH NUMBER when ordering PARTS

CRANKING MOTOR
(Delco-Remy)

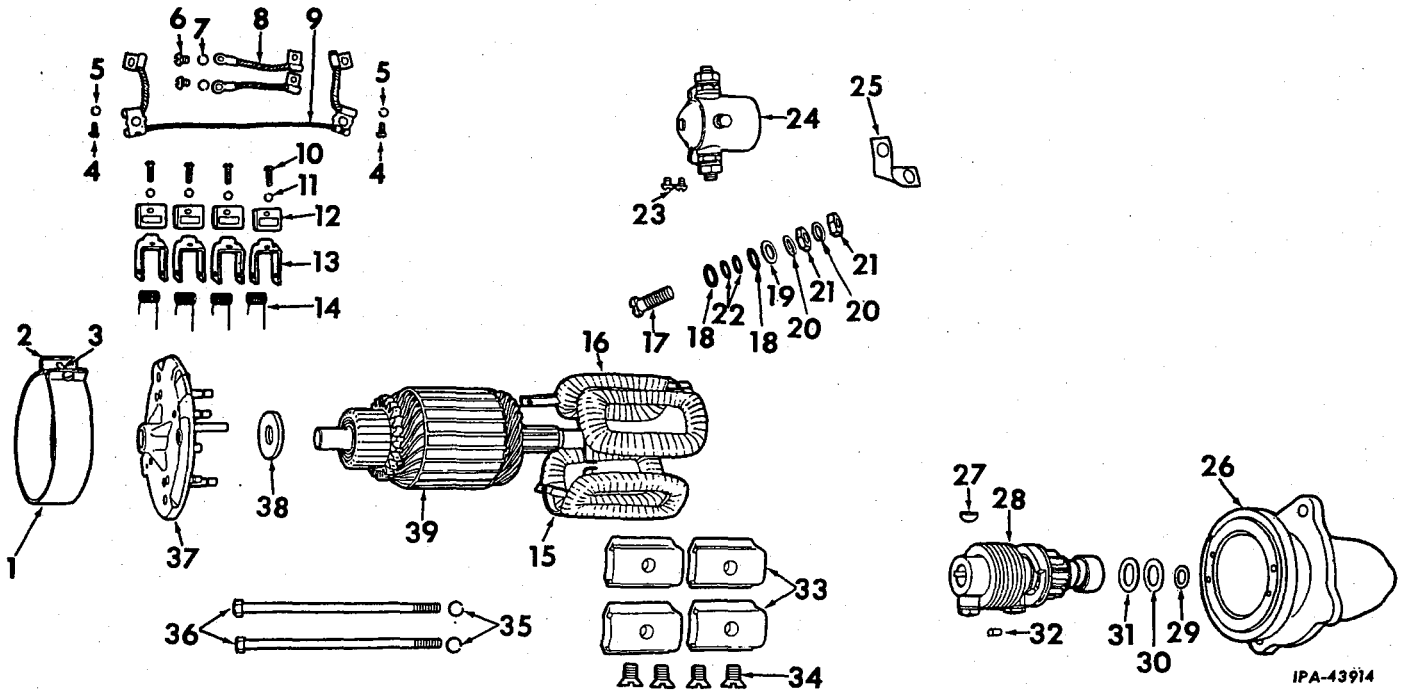

1107462	MOTOR ASSEMBLY, cranking (I.H. Part No. 270 630 R91) 3/8 x 1-1/2" hex-hd. cap SCREW (3) 3/8" lock WASHER (3)

ALWAYS give CRANKING MOTOR NUMBER when ordering PARTS

CRANKING MOTOR
(Delco-Remy) - Continued

1	1886923	BAND w/SCREW, 132926 and NUT, 120615, cover
2	120614	NUT, cover band screw
3	132926	SCREW, cover band

ALWAYS give CRANKING MOTOR NUMBER when ordering PARTS

PRINTED IN UNITED STATES OF AMERICA

REF. NO.	MFR'S. NUMBER	DESCRIPTION
		CRANKING MOTOR (Delco-Remy) - Continued
4	132892	SCREW, brush lead to field coil attaching (2)
5	120217	WASHER, brush lead attaching screw lock (2)
6	122159	SCREW, ground lead attaching (2)
7	121841	WASHER, brush ground lead attaching screw lock (2)
8	813554	LEAD, brush ground (2)
9	819362	LEAD, brush connector
10	115903	SCREW, brush attaching (4)
11	131044	WASHER, brush attaching screw lock (4)
12	811553	BRUSH (4)
13	810226	HOLDER, brush (4)
14	813521	SPRING, brush (4)
15	820404	COIL, lower field
16	1865302	COIL, upper field
17	1848837	STUD, terminal
18	1861076	WASHER, terminal stud insulating (2)
19	805790	WASHER, terminal stud (outside)
20	120381	WASHER, terminal stud lock (2)
21	805258	NUT, terminal stud (2)
22	1904669	WASHER, terminal stud insulating (2)
23	1916529	SCREW, magnetic switch attaching (2)
24	1465	SWITCH ASSEMBLY, magnetic (Composed of - 1 NUT 120622; 1 NUT 134566; 1 WASHER 120381; 1 WASHER 812622; 1 WASHER 1904615; 1 WASHER 1917846)
25	1917991	CONNECTOR, switch
26	1930451	HOUSING w/BUSHING, 810620, drive
27	124546	KEY (Woodruff) (drive end)
28	1858044	DRIVE ASSEMBLY, motor (Composed of - 1 GEAR and SHAFT 1853012; 1 HEAD 1848530; 1 SCREW 1850810; 1 SCREW 1850811; 1 SLEEVE 1849782; 1 SPRING 1850812; 1 WASHER 805057)
29	833602	WASHER, space (drive end)
30	1849774	WASHER, space (drive end)
31	809815	WASHER, space (drive end)
32	809593	PIN, dowel (drive end)
33	810601	SHOE, pole (4)

ALWAYS give CRANKING MOTOR NUMBER when ordering PARTS

REF. NO.	MFR'S. NUMBER	DESCRIPTION
		CRANKING MOTOR (Delco-Remy) - Continued
34	1881869	SCREW, pole shoe (4)
35	120380	WASHER, thru bolt lock (2)
36	809053	BOLT, thru (2)
37	1880870	FRAME (commutator end)
38	833602	WASHER, space (commutator end)
39	818002	ARMATURE
	810620	BUSHING (drive end)
	1853012	GEAR and SHAFT (motor drive)
	1848530	HEAD, drive (motor drive)
	120622	NUT (magneto switch)
	134566	NUT (magneto switch)
	1868788	OILER (commutator end)
	809062	PIN, dowel (commutator end)
	812015	PIN, brush holder stop and insulator
	812016	PIN, brush holder hinge and insulator
	817314	PIN, brush holder stop
	817313	PIN, brush hinge
	1865182	PLUG, expansion (commutator end)
	1850810	SCREW, shaft spring (motor drive)
	1850811	SCREW, head spring (motor drive)
	1849782	SLEEVE (motor drive)
	1850812	SPRING (motor drive)
	120381	WASHER (magnetic switch)
	805057	WASHER, lock (motor drive)
	812622	WASHER (magneto switch)
	1904615	WASHER (magnetic switch)
	1917846	WASHER (magnetic switch)
	802697	WICK (commutator end)

ALWAYS give CRANKING MOTOR NUMBER when ordering PARTS

REF. NO.	PART NUMBER	DESCRIPTION

HEADLIGHTS AND REAR LIGHT
(Guide Lamp Corp.)

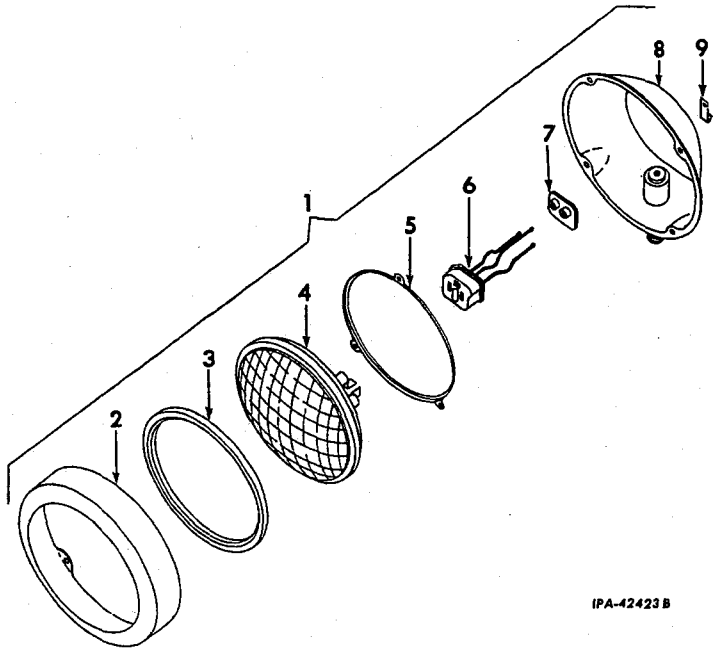

IPA-42423 B

REF. NO.	PART NUMBER	DESCRIPTION
1	275 382 R91	HEADLIGHT and REAR LIGHT ASSEMBLY (optional with 278 910 R91) (898384) (3) (Composed of - 1 CLIP 275 577 R1; 1 GASKET 272 082 R1; 1 PACKAGE 275 574 R91; 1 PLATE 272 064 R91; 1 PLATE 275 579 R1; 1 UNIT 275 578 R91; 1 WIRING and CONNECTOR 275 576 R91) 5/8NF NUT (3)
2		DOOR (order 275 574 R91) (912843) (3)
3	272 082 R1	GASKET, door (5939056) (3)

REF. NO.	PART NUMBER	DESCRIPTION

HEADLIGHTS AND REAR LIGHT
(Guide Lamp Corp.) - Continued

REF. NO.	PART NUMBER	DESCRIPTION
4	275 578 R91	UNIT, sealed (453088) (3)
5	275 579 R1	PLATE, retainer nut (5944310) (3)
6	275 576 R91	WIRING and CONNECTOR (912995) (3)
7	272 064 R91	PLATE, terminal (5935457) (3)
8		BODY (order 275 392 R91) (912847) (3)
9	275 577 R1	CLIP (913193) (3)
	275 574 R91	PACKAGE, door field service (consists of DOOR, three SCREW, 272 084 R1 and four SCREW, 272 085 R1) (5947987) (3)
	272 084 R1	SCREW (5944311) (9)
	272 085 R1	SCREW (5944312) (12)
		WASHER, No. 10 medium lock (21)

HEADLIGHTS AND REAR LIGHT
(Hobbs)

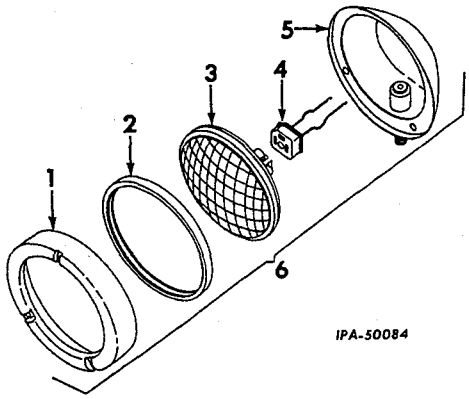

IPA-50084

HEADLIGHTS AND REAR LIGHT
(Hobbs) - Continued

REF. NO.	PART NUMBER	DESCRIPTION
1	278 091 R91	DOOR (3473) (3)
2	278 092 R1	GASKET (3471) (3)
3	275 578 R91	UNIT, sealed (3472) (3)
4	278 090 R1	WIRING and CONNECTOR (3470) (3)
5		BODY (order 278 910 R91)
6	278 910 R91	HEADLIGHT and REAR LIGHT ASSEMBLY (optional with 275 382 R91) (MI-1330) (3) (Composed of - §1 BODY; 1 DOOR 278 091 R91; 1 GASKET 278 092 R1; 1 UNIT 275 578 R91; 1 WIRING and CONNECTOR 278 090 R1)
		NUT, 5/8NF hex. (3)
		NUT, 5/8NF hex. (3474) (3)

§ - Not Furnished Separately

REF. NO.	PART NUMBER	DESCRIPTION

BRACKETS AND SWIVELS FOR HEADLIGHTS AND REAR LIGHTS

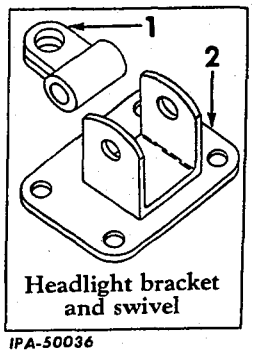

IPA-50036

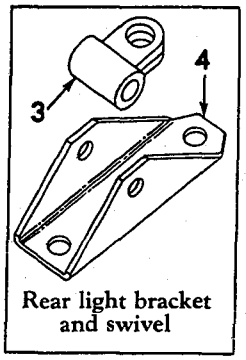

1	281 924 R1	SWIVEL, headlight (2) 1/2NF x 2-1/2" hex-hd. cap SCREW (2) 1/2" lock WASHER (2) 1/2NF NUT (2)
2	282 081 R91	BRACKET, headlight mounting (not used with headlight brush guard attachment) (2) 7/16 x 7/8" hex-hd. cap SCREW (8) 7/16" lock WASHER (8)
3	281 924 R1	SWIVEL, rear light 1/2NF x 2-1/2" hex-hd. cap SCREW 1/2" lock WASHER 1/2NF NUT
4	281 923 R1	BRACKET, rear light 1/2NF x 1" hex-hd. cap SCREW (2) 1/2NF NUT (2) 1/2" lock WASHER (2)

REF. NO.	MFR'S. NUMBER	DESCRIPTION

LIGHTING SWITCH (Delco-Remy)

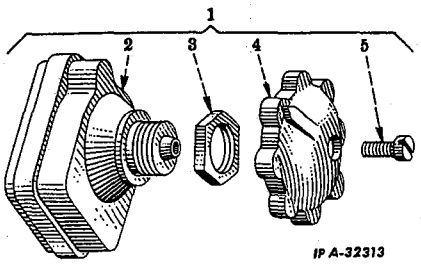

IPA-32313

1	1994053	SWITCH ASSEMBLY, lighting (I.H. Part No. 275 282 R91) 11/16" internal-tooth lock WASHER
2		SWITCH, lighting (Not Furnished Separately) (order 275 282 R91)
3	1882012	NUT, lighting switch mounting
4	1882013	KNOB, lighting switch
5	1864099	SCREW, lighting switch knob mounting WASHER, No. 8 cd-pltd. lock (Not Furnished by Delco-Remy)
	1882994	SCREW, No. 8 x 3/8" terminal (6)
	1873844	WASHER, terminal screw lock (7)

-91-

CARBURETED ENGINE (T-61)

REF. NO.	PART NUMBER	DESCRIPTION

BATTERY SUPPORT

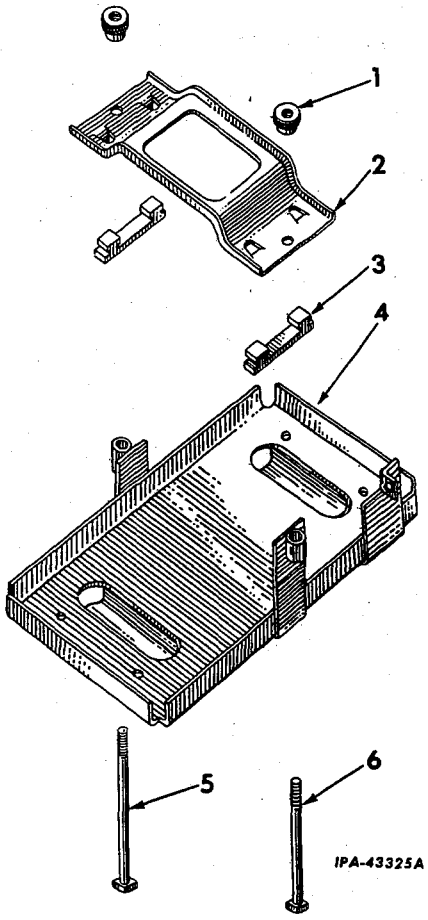

IPA-43325A

1	266 383 R2	NUT, battery hold-down bolt (2) 1/16 x 5/8" cotter PIN (2) 3/8" lock WASHER (2)
2	280 703 R1	CLAMP, battery hold-down
3	280 704 R1	BUMPER, battery hold-down (2)
4	266 381 R12	SUPPORT, battery (order 276 995 R91) (together with 276 975 R1 and 276 976 R1 will work for 266 381 R12) (T-61 38951 to 39826)
4	276 995 R91	SUPPORT, battery 1/2 x 1-1/8" hex-hd. cap SCREW (4) 1/2" lock WASHER (4) 17/32 x 1-1/16" x No. 13 ga. WASHER (4) (T-61 39827 up)
5	267 917 R1	BOLT, battery hold-down (front and rear) (long) (2) (T-61 38951 to 29826)
5	267 917 R1	BOLT, battery hold-down (front) (long) (T-61 39827 up)
6	276 976 R1	BOLT, battery hold-down (rear) (short) (T-61 39827 up)
	277 723 R1	SPACER, battery support (2)
	276 975 R1	ROD, seat hold down (also listed with "Seat and Platform" Section of this catalog)

ELECTRIC STARTING AND LIGHTING
(Battery Ignition) (T-61 38951 to 40271)

ELECTRIC STARTING AND LIGHTING
(Battery Ignition) (T-61 38951 to 40271) - Continued

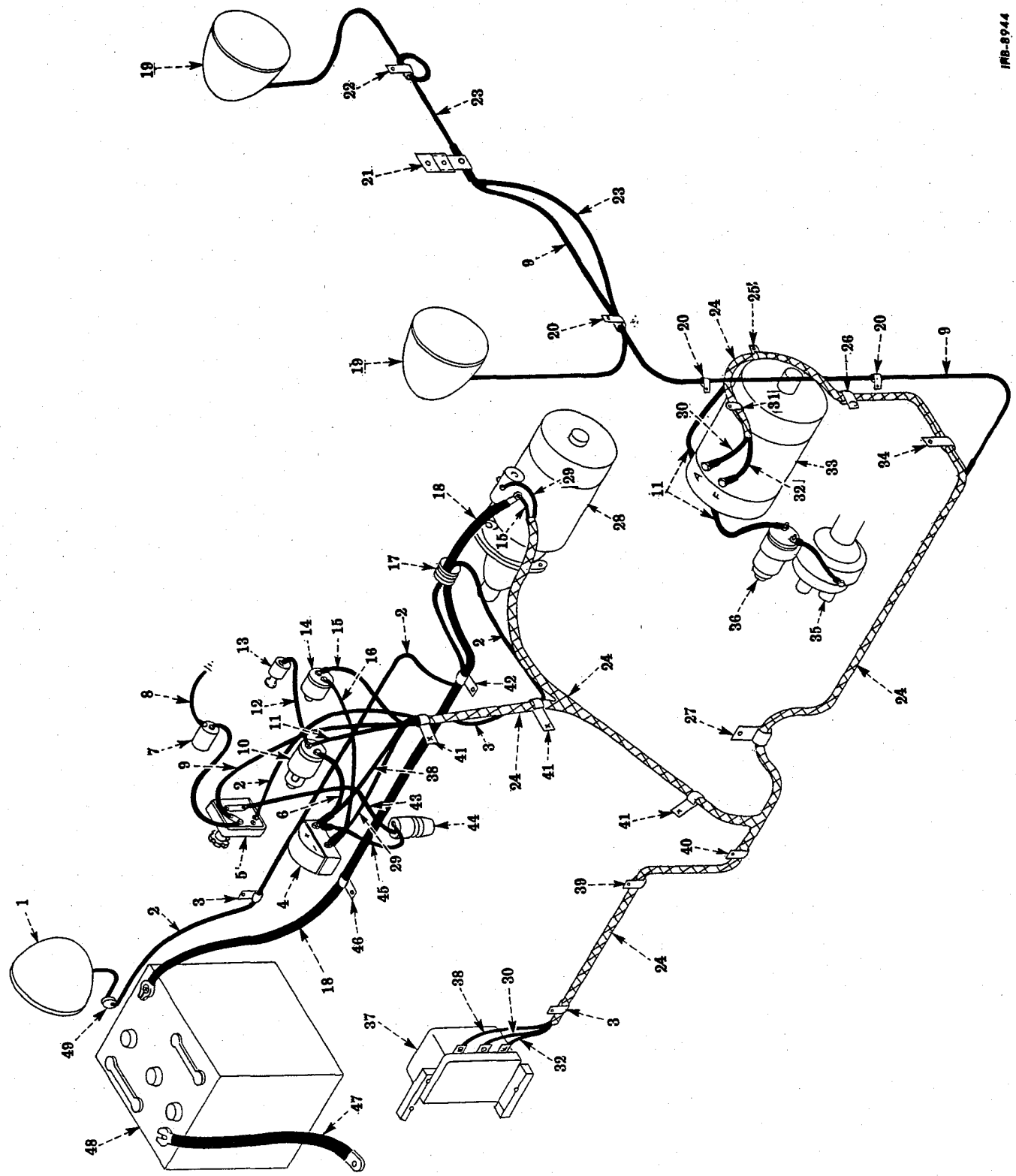

CARBURETED ENGINE (T-61)

REF. NO.	PART NUMBER	DESCRIPTION
		ELECTRIC STARTING AND LIGHTING (Battery Ignition (T-61 38951 to 40271) - Continued
1	275 382 R91	REAR LIGHT (for components see list of parts under details of "Headlights and Rear Light") (Guide Lamp) (optional with 278 910 R91)
1	278 910 R91	REAR LIGHT (for components see list of parts under details of "Headlights and Rear Light") (Hobbs) (optional with 275 382 R91) 5/8NF NUT
2	275 383 R91	CABLE, lighting switch to rear lamp
3	263 514 R92	CLIP, rubber covered cable (wear bolt to platform support) (2)
4	269 467 R92	AMMETER (for components see list of parts under details of "Instrument Panel")
5	275 282 R91	SWITCH, lighting (Delco-Remy No. 1994053) (for components see list of parts under details of "Lighting Switch") 11/16" internal-tooth lock WASHER No. 8 lock WASHER
6		CABLE, ignition switch to ammeter (orange) (order 275 380 R91)
7	275 389 R91	LIGHT, dash (for components see list of parts under details of "Dash Light")
8	274 305 R91	CABLE, dash light ground to heat indicator mounting screw ground
9		CABLE, lighting switch to headlight junction block (black) (order 275 380 R91)
10	62 801 DC	SWITCH, ignition (for components see list of parts under details of "Ignition Switch")
11		CABLE, ignition switch to ignition coil (brown) (order 275 380 R91)
12		CABLE, cigarette lighter to ignition switch (furnished with cigarette lighter) (part of ATTACHMENT, 278 729 R91)
13	361 999 R91	LIGHTER ASSEMBLY, cigarette (part of ATTACHMENT, 278 729 R91) (for components see list of parts under details of "Cigarette Lighter")
14	271 179 R91	SWITCH, starting (Delco-Remy No. 1996080) (for components see list of parts under details of "Starting Switch")
15		CABLE, starting switch to solenoid (gray) (order 275 380 R91)
16		CABLE, ammeter to starting switch (green) (order 275 380 R91)
17	112 745	GROMMET, cable harness (on dash)
18	273 901 R91	CABLE, battery to solenoid cable 3/8" NUT 3/8" lock WASHER
19	275 382 R91	HEADLIGHT ASSEMBLY (for components see list of parts under details of "Headlights and Rear Light") (Guide Lamp) (optional with 278 910 R91) (2)
19	278 910 R91	HEADLIGHT ASSEMBLY (for components see list of parts under details of "Headlights and Rear Light") (Hobbs) (optional with 275 382 R91) (2) 5/8NF NUT (2)
20	263 515 R91	CLIP, cable (for 3/8" bolt) (on fan shroud) (3)
21	275 278 R91	BLOCK w/BLOCK, 42 915 D and BRACKET, 275 279 R1, junction and bracket headlight
22	263 514 R91	CLIP, cable (3/8" bolt) (on fan shroud)
23	57 062 DA	CABLE, junction block to headlight cables (2)
24	275 380 R91	HARNESS, cable

CARBURETED ENGINE (T-61)

REF. NO.	PART NUMBER	DESCRIPTION
		ELECTRIC STARTING AND LIGHTING (Battery Ignition) (T-61 38951 to 40271) - Continued
25	264 196 R91	CLIP, cable (for 3/8" bolt) (on water outlet elbow)
26	263 514 R91	CLIP, cable (for 3/8" bolt) (upper rear distributor bracket bolt)
27	263 514 R91	CLIP, cable (for 3/8" bolt) (oil filter base bolt)
28	270 630 R91	MOTOR, cranking (Delco-Remy No. 1107462) (for components see list of parts under details of "Cranking Motor") 3/8 x 1-1/2" hex-hd. cap SCREW (3) 3/8" lock WASHER (3)
29		CABLE, ammeter to solenoid (red) (order 275 380 R91)
30		CABLE, "A" terminal on generator to generator on regulator (yellow) (order 275 380 R91)
31	264 164 R91	CLIP, cable (for 3/8" bolt) (mount on generator brace bolt)
32		CABLE, "F" on generator to "F" on regulator (blue) (order 275 380 R91)
33	275 388 R91	GENERATOR (Delco-Remy No. 1105018) (for components see list of parts under details of "Generator") 3/8 x 1-1/4" hex-hd. cap SCREW (2) 3/8" lock WASHER (2)
34	263 514 R91	CLIP, cable (for 3/8" bolt) (lower outside distributor bracket bolt)
35	362 473 R91	DISTRIBUTOR (for components see list of parts under details of "Distributor")
36	353 874 R91	COIL, ignition (6 Volt)
37	275 379 R91	REGULATOR, voltage (Delco-Remy No. 1119176) (for components see list of parts under details of "Voltage Regulator") 1/4NF NUT (4) 1/4NF x 1-1/4" slt-rd-hd. mach. SCREW (4) 1/4" lock WASHER (4)
38		CABLE, ammeter (order 275 380 R91)
39	263 514 R91	CLIP, cable (for 3/8" bolt) (front bolt to platform support)
40	275 281 R91	CLIP, cable (for 3/8" bolt) (front center fender bolt) (3)
41	271 513 R91	CLIP, cable (mounted on dash)
42	267 788 R91	CLIP, cable (for 3/8" bolt) (rear left clutch housing cover bolt)
43		CABLE, lighting switch to fuse (furnished with fuse housing)
44	275 276 R91	HOUSING, fuse
45		CABLE, "4" ammeter to fuse (furnished with fuse housing)
46	267 787 R91	CLIP, cable (for 7/16" bolt) (left center transmission housing)
47	266 855 R91	CABLE, battery to ground cable
48	266 385 R92	BATTERY, wet charged (Auto-Lite) (optional with 269 455 R91)
48	269 455 R91	BATTERY, wet charged (Globe Union) (optional with 266 385 R91)
48	277 372 R91	BATTERY, dry charged (Auto-Lite)
49	112 734	GROMMET, cable harness (on seat side sheet)
	120 114	FUSE
		NUT, 1/2" (for headlight junction block and bracket)
		SCREW, No. 10 x 1/2" slt-rd-hd.
		WASHER, No. 10 lock

REF. NO.	PART NUMBER	DESCRIPTION

ELECTRIC STARTING AND LIGHTING
(Battery Ignition) (T-61 40272 up)

-94-

CARBURETED ENGINE (T-61)

REF. NO.	PART NUMBER	DESCRIPTION

ELECTRIC STARTING AND LIGHTING
(Battery Ignition) (T-61 40272 up) - Continued

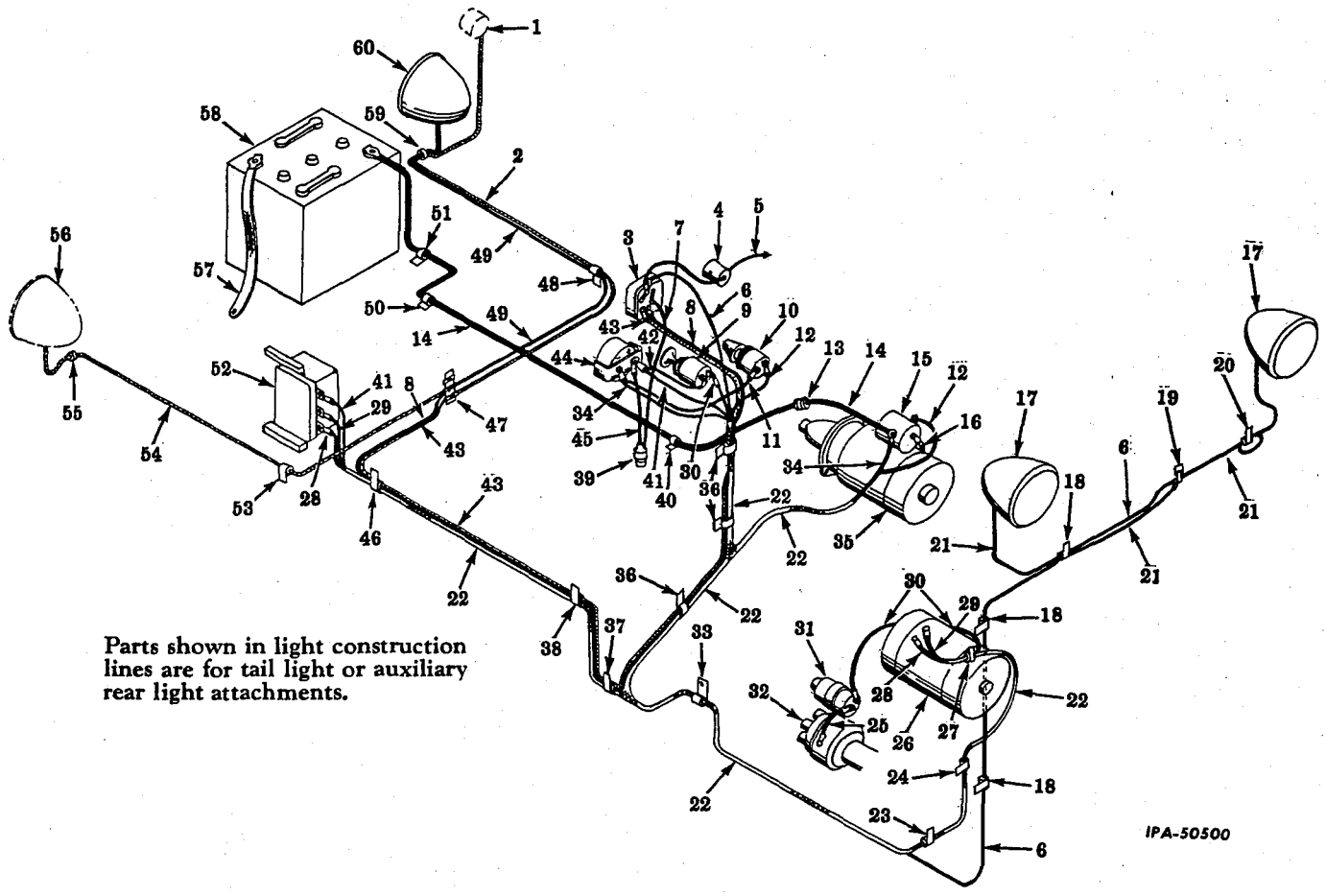

1	277 382 R91	LIGHT, tail (for components see list of parts under details of "Tail Light and Guard")
2	43 041 DA	CABLE, junction block to tail light
3	275 282 R91	SWITCH, lighting (for components see list of parts under details of "Lighting Switch")
4	275 389 R91	LIGHT, dash (for components see list of parts under details of "Dash Light")
5	274 305 R91	CALBE, ground to heat indicator mounting screw dash light ground
6		CABLE, lighting switch to headlight junction block (black) (order 275 380 R91)
7		CABLE, lighting switch to fuse (furnished with fuse housing 275 276 R91)
8	358 581 R91	CABLE, lighting switch to rear light junction block
9	62 801 DC	SWITCH, ignition (for components see list of parts under details of "Ignition Switch")
10	271 179 R91	SWITCH, starting (for components see list of parts under details of "Starting Switch")
11		CABLE, ammeter to starting switch (green) (order 275 380 R91)
12		CABLE, starting switch to magnetic switch (gray) (order 275 380 R91)
13	112 745	GROMMET, cable harness (on dash)
14	273 901 R91	CABLE, battery to magnetic switch
15		SWITCH, cranking motor magnetic (for components see list of parts under details of "Cranking Motor")
16		STRAP, magnetic to cranking motor (furnished with "Cranking Motor")
17	275 382 R91	HEADLIGHT ASSEMBLY (for components see list of parts under details of "Headlights and Rear Light") (optional with 278 910 R91) (2)
17	278 910 R91	HEADLIGHT ASSEMBLY (for components see list of parts under details of "Headlights and Rear Light") (optional with 275 382 R91) (2)
18	263 515 R91	CLIP, cable (for 5/16" bolt) (fan shroud) (3)

PRINTED IN UNITED STATES OF AMERICA

REF. NO.	PART NUMBER	DESCRIPTION

ELECTRIC STARTING AND LIGHTING
(Battery Ignition) (T-61 40272 up) - Continued

19	275 278 R91	BLOCK w/BLOCK, 42 915 D and BRACKET, 275 279 R91, junction and bracket headlight
20	263 514 R91	CLIP, cable (for 3/8" bolt) (fan shroud)
21	57 062 DA	CABLE, junction block to headlight (2)
22	275 380 R91	HARNESS, cable
23	263 514 R91	CLIP, cable (for 3/8" bolt) (lower outside distributor mounting bolt)
24	263 514 R91	CLIP, cable (for 3/8" bolt) (upper rear distributor bracket bolt)
25	357 929 R92	CABLE w/two TERMINAL, coil to distributor primary (also listed under "Battery Ignition Unit")
26	275 388 R91	GENERATOR ASSEMBLY (for components see list of parts under details of "Generator")
27	264 164 R91	CLIP, cable (for 3/8" bolt) (generator brace bolt)
28		CABLE, "F" terminal on generator to "F" on regulator (blue) (order 275 380 R91)
29		CABLE, "A" terminal on generator to generator on regulator (yellow) (order 275 380 R91)
30		CABLE, ignition switch to ignition coil (brown) (order 275 380 R91)
31	353 874 R91	COIL, ignition
32	362 473 R91	DISTRIBUTOR (for components see list of parts under details of "Distributor")
33	263 514 R91	CLIP, cable (for 3/8" bolt) (oil filter base bolt)
34		CABLE, ammeter to magnetic switch (red) (order 275 380 R91)
35	270 630 R91	MOTOR ASSEMBLY, cranking (for components see list of parts under details of "Cranking Motor")
36		CLIP, cable (mounted on dash) (welded) (3)
37	275 281 R91	CLIP, cable (for 3/8" bolt) (front center fender bolt)
38	263 514 R91	CLIP, cable (front bolt to platform support)
39	275 276 R91	HOUSING, fuse (purchased with cable)
40	267 788 R91	CLIP, cable (for 3/8" bolt) (rear left clutch housing cover bolt)
41		CABLE, ammeter to "Battery" on regulator (pink) (order 275 380 R91)
42		CABLE, ignition switch to ammeter (orange) (order 275 380 R91)
43	277 460 R91	CABLE, lighting switch to tail light junction block (red)
44	269 467 R92	AMMETER
45		CABLE (+ side) ammeter to fuse (furnished with fuse HOUSING, 275 276 R91)
46	263 514 R91	CLIP, cable (for 3/8" bolt) (rear bolt to platform support)

-95-

CARBURETED ENGINE (T-61)

REF. NO.	PART NUMBER	DESCRIPTION

ELECTRIC STARTING AND LIGHTING
(Battery Ignition) (T-61 40272 up) - Continued

47	300 559 R91	BLOCK, junction (rear light) No. 10 NF NUT (2) No. 10NF x 5/8" slt-rd-hd. mach. SCREW (2) No. 10 lock WASHER (2)
48	362 120 R1	CLIP, cable (mounted on side sheet bracket)
49	266 767 R91	CABLE, junction block to rear light
50	267 787 R91	CLIP, cable (for 7/16" bolt) (left center transmission housing)
51	267 787 R91	CLIP, cable (for 7/16" bolt) (left fender mount)
52	275 379 R91	REGULATOR ASSEMBLY, voltage (for components see list of parts under details of "Voltage Regulator")
53	362 120 R1	CLIP, cable (on side sheet bracket)
54	266 767 R91	CABLE, junction block to auxiliary rear light
55	112 734	GROMMET, cable (on side sheet)
56	275 382 R91	REAR LIGHT (Guide Lamp) (for components see list of parts under details of "Headlights and Rear Light") (optional with 278 910 R91)
56	278 910 R91	REAR LIGHT (Hobbs) (for components see list of parts under details of "Headlights and Rear Light") (optional with 275 382 R91)
57	266 855 R91	CABLE, battery to ground
58	266 385 R92	BATTERY, wet charged (Auto-Lite) (optional with 269 455 R91)
58	269 455 R91	BATTERY, wet charged (Globe Union) (optional with 266 385 R92)
58	277 372 R91	BATTERY, dry charged (Auto-Lite)
59	112 734	GROMMET, cable harness (on side sheet)
60	275 382 R91	REAR LIGHT ASSEMBLY (for components see list of parts under details of "Headlights and Rear Light") (optional with 278 910 R91)
60	278 910 R91	REAR LIGHT ASSEMBLY (for components see list of parts under details of "Headlights and Rear Light") (optional with 275 382 R91)
	42 915 D	BLOCK, junction No. 10 NUT No. 10 x 1/2" slt-rd-hd. SCREW No. 10 lock WASHER
	356 062 R91	BOLT and NUT, battery cable
	279 279 R1	BRACKET, junction block
	120 114	FUSE

ELECTRIC STARTING AND LIGHTING
(Magneto Ignition) (T-61 38951 to 40271)

ELECTRIC STARTING AND LIGHTING
(Magneto Ignition) (T-61 38951 to 40271) - Continued

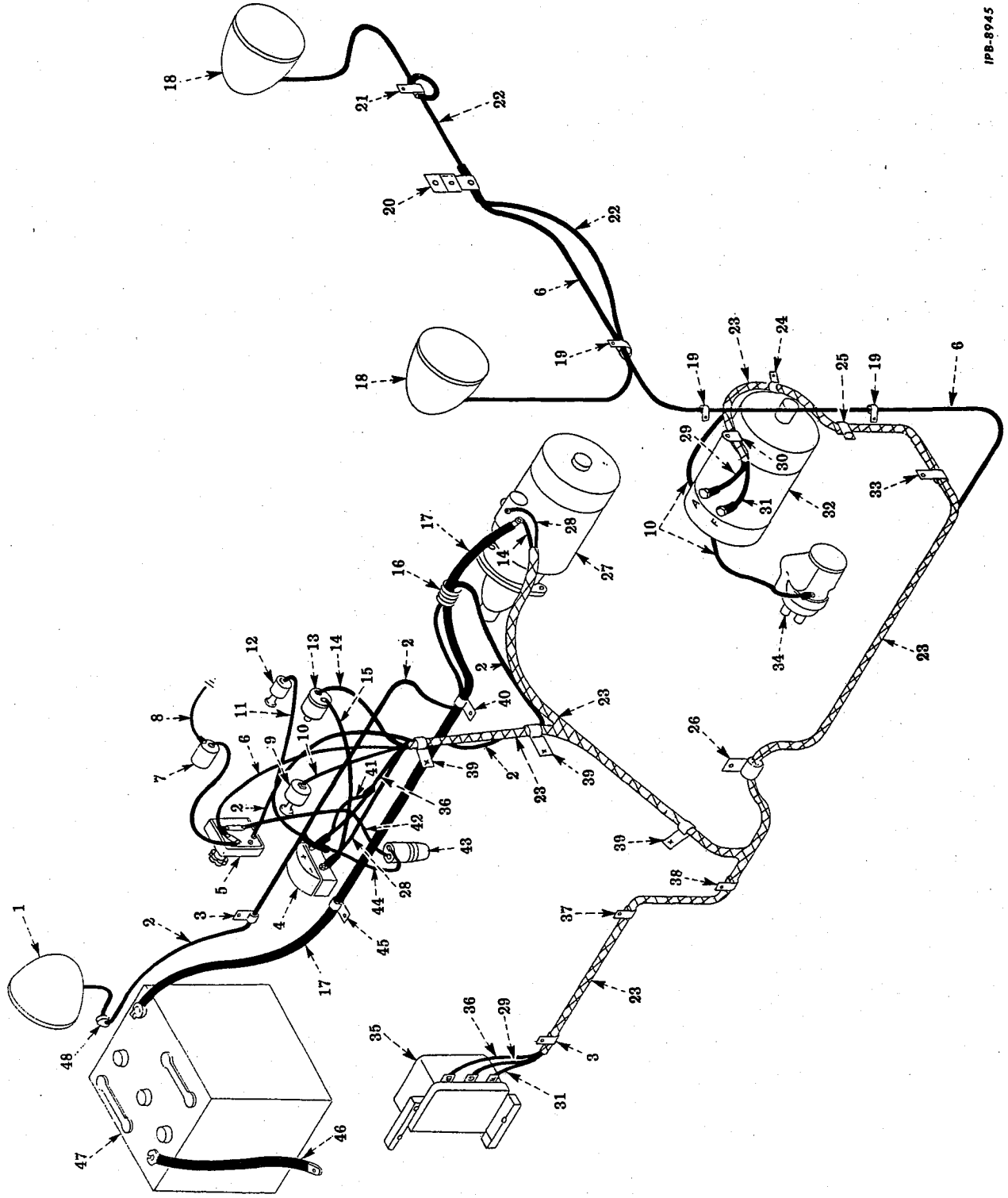

CARBURETED ENGINE (T-61)

REF. NO.	PART NUMBER	DESCRIPTION

ELECTRIC STARTING AND LIGHTING
(Magneto Ignition (T-61 38951 to 40271) - Continued

1	275 382 R91	REAR LIGHT ASSEMBLY (for components see list of parts under details of "Headlights and Rear Light") (Guide Lamp) (optional with 278 910 R91)
1	278 910 R91	REAR LIGHT ASSEMBLY (for components see list of parts under details of "Headlights and Rear Light") (Hobbs) (optional with 275 382 R91)
2	275 373 R91	CABLE, lighting switch to rear lamp
3	263 514 R91	CLIP, cable rubber covered (for 3/8" bolt) (on rear platform support) (2)
4	269 467 R92	AMMETER (for components see list of parts under details of "Instrument Panel")
5	275 282 R91	SWITCH, lighting (Delco-Remy No. 1994053) (for components see list of parts under details of "Lighting Switch") 11/16" internal-tooth lock WASHER No. 8 lock WASHER
6		CABLE, lighting switch to headlight junction (black) (order 275 380 R91)
7	275 389 R91	LIGHT, dash (for components see list of parts under details of "Dash Light")
8	274 305 R91	CABLE, ground, dash light ground to heat indicator mounting screw
9	54 207 DB	SWITCH, magneto ignition (for components see list of parts under details of "Magneto Ignition Switch and Cable")
10		CABLE, magneto ignition switch to magneto (brown) (order 275 380 R91)
11		CABLE, cigarette lighter to ammeter (furnished with cigarette lighter) (part of ATTACHMENT, 278 729 R91)
12	361 999 R91	LIGHTER ASSEMBLY, cigarette (part of ATTACHMENT, 278 729 R91)(for components see list of parts under details of "Cigarette Lighter")
13	271 179 R91	SWITCH, starting (Delco-Remy No. 1996080) (for components see list of parts under details of "Starting Switch")
14		CABLE, starting switch to solenoid (gray) (order 275 380 R91)
15		CABLE, ammeter to starting switch (green) (order 275 380 R91)
16	112 745	GROMMET, cable harness (on dash)
17	273 901 R91	CABLE, battery to solenoid 3/8" NUT 3/8" lock WASHER
18	275 382 R91	HEADLIGHT ASSEMBLY (for components see list of parts under details of "Headlights and Rear Light") (Guide Lamp) (optional with 278 910 R91) (2)
18	278 910 R91	HEADLIGHT ASSEMBLY (for components see list of parts under details of "Headlights and Rear Light") (Hobbs) (optional with 275 382 R91) (2) 5/8NF NUT (2)
19	263 515 R91	CLIP, cable (for 5/16" bolt) (on fan shroud) (3)
20	275 278 R91	BLOCK w/BLOCK, 42 915 D and BRACKET, 275 279 R1, junction and bracket headlight
21	263 514 R91	CLIP, cable (3/8" bolt) (on fan shroud)
22	57 062 DA	CABLE, junction block to headlight cables (2)

CARBURETED ENGINE (T-61)

REF. NO.	PART NUMBER	DESCRIPTION

ELECTRIC STARTING AND LIGHTING
(Magneto Ignition) (T-61 38951 to 40271) - Continued

23	275 380 R91	HARNESS, cable
24	264 196 R91	CLIP, cable (for 3/8" bolt) (on water outlet elbow)
25	263 514 R91	CLIP, cable (for 3/8" bolt) (upper rear distributor bracket bolt)
26	263 514 R91	CLIP, cable (for 3/8" bolt) (oil filter base bolt)
27	270 630 R91	MOTOR, cranking (Delco-Remy No. 1107462) (for components see list of parts under details of "Cranking Motor") 3/8 x 1-1/2" hex-hd. cap SCREW (2) 3/8" lock WASHER (3)
28		CABLE, ammeter to solenoid (red) (order 275 380 R91)
29		CABLE, "A" terminal on generator to generator on regulator (yellow) (order 275 380 R91)
30	263 716 R91	CLIP, cable (for 5/16" bolt) (mount on generator brace bolt)
31		CABLE, "F" on generator to "F" on regulato (blue) (order 275 380 R91)
32	275 388 R91	GENERATOR (Delco-Remy No. 1105018) (for components see list of parts under details of "Generator") 3/8 x 1-1/4" hex-hd. cap SCREW (2) 3/8" lock WASHER (2)
33	263 514 R91	CLIP, cable (for 3/8" bolt) (lower outside distributor bracket bolt)
34	351 218 R92	MAGNETO (for components see list of parts under details of "Magneto") 3/8 x 1-1/2" hex-hd. cap SCREW 3/8 x 1-7/8" hex-hd. cap SCREW 3/8" lock WASHER (2)
35	275 379 R91	REGULATOR, voltage (Delco-Remy No. 1119176) (for components see list of parts under details of "Voltage Regulator") 1/4NF NUT (4) 1/4 x 1-1/4" slt-rd-hd. mach. SCREW (4) 1/4" lock WASHER (4)
36		CABLE, ammeter to battery on regulator (pink) (order 275 380 R91)
37	263 514 R91	CLIP, cable (for 3/8" bolt) (front bolt to platform support)
38	275 281 R91	CLIP, cable (for 3/8" bolt) (front center fend bolt)
39	271 513 R91	CLIP, cable (mounted on dash) (3)
40	267 788 R91	CLIP, cable (for 3/8" bolt) (rear left clutch housing cover bolt)
41		CABLE, ignition switch to ammeter (orange) (insulate terminal and tape securely to cable harness)
42		CABLE, lighting switch to fuse (furnished with fuse housing)
43	275 276 R91	HOUSING, fuse
44		CABLE, "+" ammeter to fuse (furnished with fuse housing)
45	267 787 R91	CLIP, cable (for 7/16" bolt) (left center transmision housing)
46	266 855 R91	CABLE, battery to ground
47	266 385 R92	BATTERY, wet charged (Auto-Lite) (optional with 269 455 R91)
47	269 455 R91	BATTERY, wet charged (Globe Union) (optional with 266 385 R91)
47	277 372 R91	BATTERY, dry charged (Auto-Lite)

REF. NO.	PART NUMBER	DESCRIPTION
		ELECTRIC STARTING AND LIGHTING (Magneto Ignition) (T-61 38951 to 40271) - Continued
48	112 734	GROMMET, cable harness (on seat side sheet)
	263 859 R91	ATTACHMENT, magneto ignition (See NOTE) (Composed of - 1 MAGNETO 351 218 R92; 1 SPACER 56 507 D; 1 SWITCH 54 207 DB; 1 TUBE 21 372 D; 2 WASHER 62 493 D)
	42 915 D	BLOCK, junction; No. 10 NUT (*); No. 10 x 1/2" slt-rd-hd. (*); WASHER, No. 10 medium lock
	275 279 R1	BRACKET, junction block
	120 114	FUSE

-98-

CARBURETED ENGINE (T-61)

REF. NO.	PART NUMBER	DESCRIPTION
		ELECTRIC STARTING AND LIGHTING (Magneto Ignition) (T-61 38951 to 40271) - Continued
		SCREW, No. 10NF x 5/16" slt-fil-hd. mach. (to magneto cable)
	56 507 D	SPACER, magneto ignition switch
	21 372 D	TUBE, magneto grease (X)
	62 493 D	WASHER, magneto bolt (2); WASHER, No. 10 medium lock (to magneto cable)

NOTE - Factory Application - Order on machine order form
Field Application - Order through regular service parts channels

(*) - Used for headlight junction block and bracket

X - As Required

ELECTRIC STARTING AND LIGHTING
(Magneto Ignition) (T-61 40272 up)

ELECTRIC STARTING AND LIGHTING
(Magneto Ignition) (T-61 40272 up) - Continued

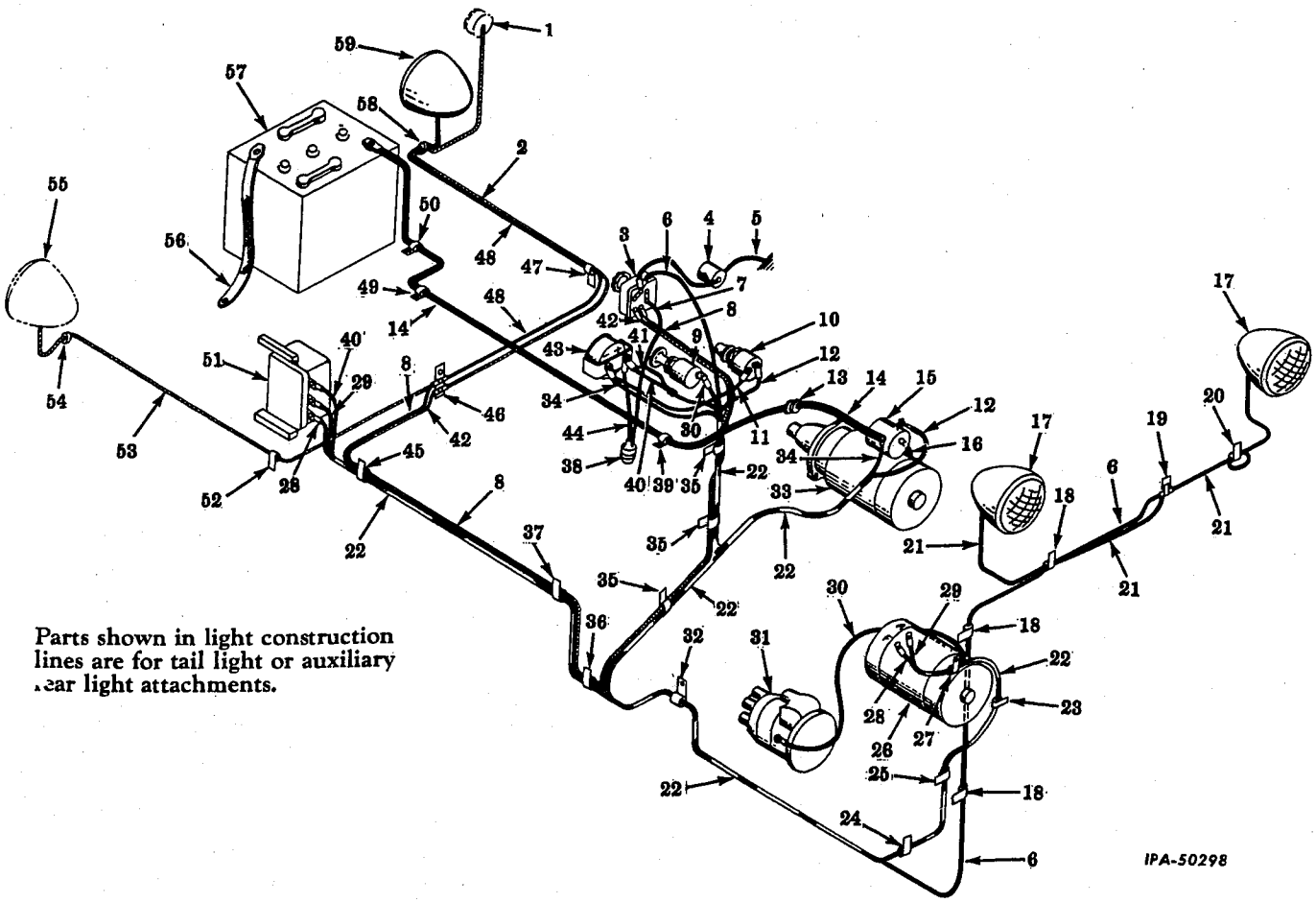

PRINTED IN UNITED STATES OF AMERICA

CARBURETED ENGINE (T-61)

REF. NO.	PART NUMBER	DESCRIPTION

ELECTRIC STARTING AND LIGHTING
(Magneto Ignition) (T-61 40272 up) - Continued

1	277 382 R91	LIGHT ASSEMBLY, tail (for components see list of parts under details of "Tail Light and Guard")
2	43 041 DA	CABLE, junction block to tail light
3	275 282 R91	SWITCH, lighting (for components see list of parts under details of "Lighting Switch")
4	275 389 R91	LIGHT, dash (for components see list of parts under details of "Dash Light")
5	274 305 R91	CABLE, dash light ground to heat indicator mounting screw ground
6		CABLE, lighting switch to headlight junction block (black) (order 275 380 R91)
7		CABLE, lighting switch to fuse (furnished with fuse HOUSING, 275 276 R91)
8	358 581 R91	CABLE, lighting switch to rear light junction block
9	54 207 DB	SWITCH, magneto ignition (for components see list of parts under details of "Magneto Ignition Switch")
10	271 179 R91	SWITCH, starting (for components see list of parts under details of "Starting Switch")
11		CABLE, ammeter to starting switch (green) (order 275 380 R91)
		CABLE, starting swtich to magnetic switch (gray) (order 275 380 R91)
13	112 745	GROMMET, cable harness (on dash)
14	273 901 R91	CABLE, battery to magnetic switch
15		SWITCH, cranking motor magnetic (Delco-Remy No. 1465) (for components see list of parts under details of "Cranking Motor")
16		STRAP, magnetic to cranking motor (furnished with "Cranking Motor") (Delco-Remy No. 1107462)
17	275 382 R91	HEADLIGHT ASSEMBLY (for components see list of parts under details of "Headlights and Rear Light") (optional with 278 910 R91) (2)
17	278 910 R91	HEADLIGHT ASSEMBLY (for components see list of parts under details of "Headlights and Rear Light") (optional with 275 382 R91) (2)
18	263 515 R91	CLIP, cable (for 5/16" bolt) (fan shroud) (3)
19	275 278 R91	BLOCK w/BLOCK, 42 915 D and BRACKET, 275 279 R1, junction and bracket headlight
20	263 514 R91	CLIP, cable (for 3/8" bolt) (fan shroud)
21	57 062 DA	CABLE, junction block to headlight (2)
22	275 380 R91	HARNESS, cable
23	264 196 R91	CLIP, cable (for 3/8" bolt) (water elbow outlet)
24	263 514 R91	CLIP, cable (for 3/8" bolt) (lower outside distributor mounting bolt)
25	263 514 R91	CLIP, cable (for 3/8" bolt) (upper rear distributor bracket bolt)
26	275 388 R91	GENERATOR ASSEMBLY (for components see list of parts under details of "Generator")
	263 716 R91	CLIP, cable (for 5/16" bolt) (generator brace bolt)
28		CABLE, "F" terminal on generator to "F" on regulator (blue) (order 275 380 R91)
29		CABLE, "A" terminal on generator to generator on regulator (yellow) (order 275 380 R91)

-99-

CARBURETED ENGINE (T-61)

REF. NO. PART NUMBER DESCRIPTION

ELECTRIC STARTING AND LIGHTING
(Magneto Ignition) (T-61 40272 up) - Continued

30		CABLE, magneto ignition switch to magneto (brown) (order 275 380 R91)
31	351 218 R92	MAGNETO ASSEMBLY (for components see list of parts under details of "Magneto")
32	263 514 R91	CLIP, cable (for 3/8" bolt) (oil filter base bolt
33	270 630 R91	MOTOR ASSEMBLY, cranking (Delco-Remy No. 1107462) (for components see list of parts under details of "Cranking Motor")
34		CABLE, ammeter to magnetic switch (red) (order 275 380 R91)
35		CLIP, cable (mounted on dash) (welded) (3)
36	275 381 R91	CLIP, cable (for 3/8" bolt) (front center fender bolt)
37	263 514 R91	CLIP, cable (front bolt to platform support)
38	275 276 R91	HOUSING, fuse (purchased with cable)
39	267 788 R91	CLIP, cable (for 3/8" bolt) (rear left clutch housing cover bolt)
40		CABLE, ammeter to "Battery" on regulator (pink) (order 275 380 R91)
41		CABLE, magneto switch to ammeter (orange) (insulate terminal and tape securely) (order 275 380 R91)
42	277 460 R91	CABLE, lighting switch to tail light junction block (red)
43	269 467 R92	AMMETER
44		CABLE ("+" side) ammeter to fuse (furnished with fuse HOUSING, 275 276 R91)
45	263 514 R91	CLIP, cable (for 3/8" bolt) (rear bolt to platform support)
46	300 559 R91	BLOCK, junction (rear light) No. 10NF NUT (2) No. 10NF x 5/8" slt-rd-hd. mach. SCREW (2) No. 10 lock WASHER (2)
47	362 120 R1	CLIP, cable (mounted on side sheet bracket)
48	266 767 R91	CABLE, junction block to rear light
49	267 787 R91	CLIP, cable (for 7/16" bolt) (left center transmission housing)
50	267 787 R91	CLIP, cable (for 7/16" bolt) (left fender mount
51	275 379 R91	REGULATOR ASSEMBLY, voltage (for components see list of parts under details of "Voltage Regulator")
52	362 120 R1	CLIP, cable (on side sheet bracket)
53	266 767 R91	CABLE, junction block to auxiliary rear light
54	112 734	GROMMET, cable (on side sheet)
55	275 382 R91	REAR LIGHT ASSEMBLY (Guide Lamp) (for components see list of parts under details of "Headlights and Rear Light") (optional with 278 910 R91)
55	278 910 R91	REAR LIGHT ASSEMBLY (Hobbs) (for components see list of parts under details of "Headlights and Rear Light") (optional with 275 382 R91)
56	266 855 R91	CABLE, battery to ground
57	266 385 R92	BATTERY, wet charged (service) (Auto-Lite) (optional with 269 455 R91)
57	269 455 R91	BATTERY, wet charged (service) (Globe Union) (optional with 266 385 R92)
57	277 372 R91	BATTERY, dry charged (service) (Auto-Lite)
58	112 734	GROMMET, cable harness (on side sheet)

REF. NO.	PART NUMBER	DESCRIPTION

ELECTRIC STARTING AND LIGHTING
(Magneto Ignition) (T-61 40272 up) - Continued

59	275 382 R91	REAR LIGHT ASSEMBLY (for components see list of parts under details of "Headlights and Rear Light") (optional with 278 910 R91)
59	278 910 R91	REAR LIGHT ASSEMBLY (for components see list of parts under details of "Headlights and Rear Light") (optional with 275 382 R91)
	263 859 R91	ATTACHMENT, magneto ignition (See NOTE) (Composed of - 1 MAGNETO 351 218 R92; 1 SPACER 56 507 D; 1 SWITCH 54 207 DB; 1 TUBE 21 372 D; 2 WASHER 62 493 D)
	42 915 D	BLOCK, junction; No. 10 NUT; No. 10 x 1/2" slt-rd-hd. SCREW; No. 10 lock WASHER

TAIL LIGHT AND GUARD
(Guide Lamp) (T-61 40272 up)

-100-

CARBURETED ENGINE (T-61)

REF. NO.	PART NUMBER	DESCRIPTION

ELECTRIC STARTING AND LIGHTING
(Magneto Ignition) (T-61 40272 up) - Continued

	275 279 R1	BRACKET, junction block
	356 062 R91	BOLT and NUT, battery cable (X)
	120 114	FUSE
		SCREW, No. 10NF x 5/16" slt-fil-hd. mach. (to magneto cable)
	56 507 D	SPACER, magneto ignition switch
	21 372 D	TUBE, magneto grease (X)
	62 493 D	WASHER, magneto bolt (2); WASHER, No. 10 medium lock (to magneto cable)

NOTE - Factory Application - Order on machine order form.
Field Application - Order through regular service parts channels.
X - As Required.

TAIL LIGHT AND GUARD
(Guide Lamp) (T-61 40272 up) - Continued

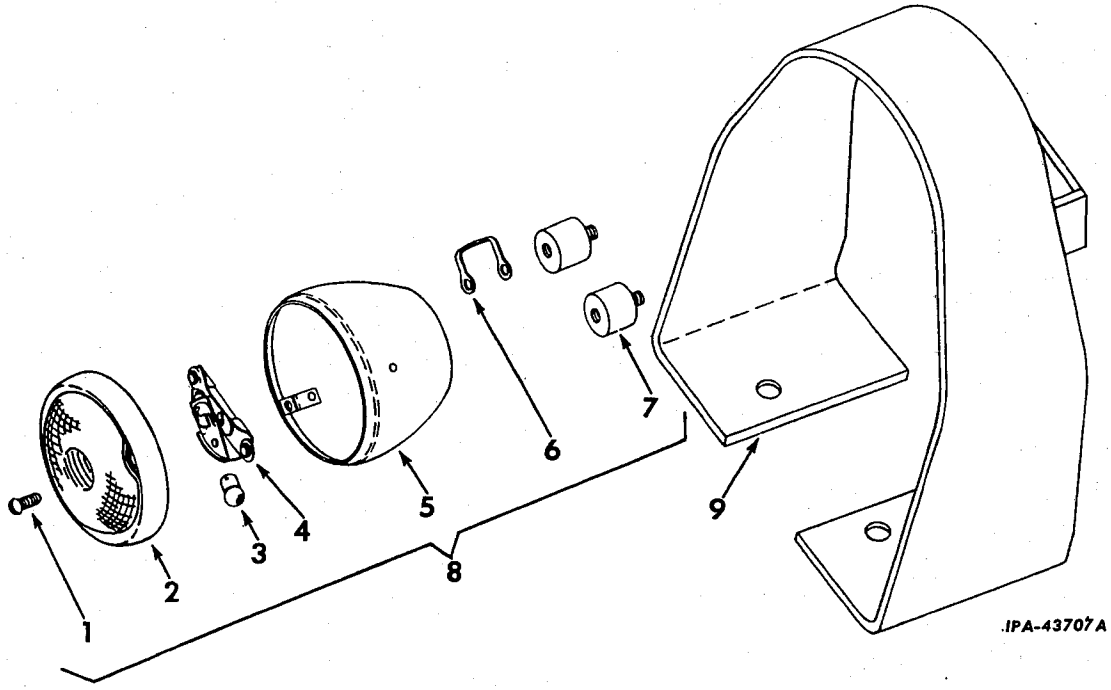

1	53 526 D	SCREW, door (912048) (2)
2	18 370 DX	DOOR (914458)
3	142 303	BULB (3 Cp, 6 volt)
4	277 417 R1	SOCKET and PLATE (914054)
5		BODY (order 277 382 R91)
6	277 418 R1	TERMINAL, ground (5942271)
7	277 419 R91	MOUNTING, resilient (914053) (2); 1/4NF cd-pltd. NUT (2); 1/4" cd-pltd. internal-tooth lock WASHER (5)
8	277 382 R91	TAIL LIGHT ASSEMBLY (Guide Lamp) (898633) (Composed of - 1 BULB 142 303; 1 DOOR 18 370 DX; 1 MOUNTING 277 419 R91; 2 NUT 18 369 D; 2 SCREW 53 526 D; 1 SOCKET and PLATE 277 417 R1; 1 TERMINAL 277 418 R1)

PRINTED IN UNITED STATES OF AMERICA

REF. NO.	PART NUMBER	DESCRIPTION

TAIL LIGHT AND GUARD
(Guide Lamp) (T-61 40272 up) - Continued

9	277 461 R11	GUARD, rear light and tail light 1/2" NUT (2) 1/2 x 1-1/4" hex-hd. cap SCREW (2) 1/2" lock WASHER (2)
	277 460 R91	CABLE, lighting switch to junction block (†)

AUXILIARY REAR LIGHT (T-61 40272 up)

	281 923 R1	BRACKET, rear light (See NOTE 1) 1/2NF NUT (2) 1/2NF x 2-1/2" hex-hd. cap SCREW (2) 1/2" lock WASHER (2)
	266 767 R91	CABLE, junction block to rear light (See NOTE 2)
	362 120 R1	CLIP, cable (rubber covered) (See NOTE 2) 3/8NF NUT
	112 734	GROMMET, cable (on side sheet) (See NOTE 2)
	275 382 R91	REAR LIGHT ASSEMBLY (Guide Lamp) (optional with 278 910 R91) (for components see list of parts under details of "Headlights and Rear Light")

HEADLIGHT BRUSH GUARD

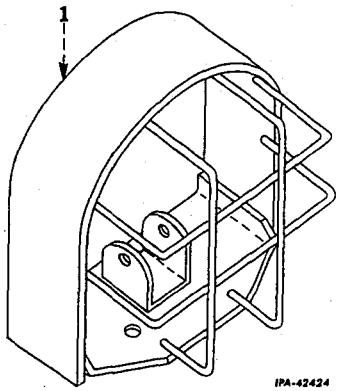

	274 570 R91	ATTACHMENT, headlight brush guard Factory Application - Order on Machine Order Form Field Application - Order through Regular Service Parts Channels
1	274 571 R91	GUARD, headlight brush (2) 7/16 x 7/8" hex-hd. cap SCREW (8) 7/16" lock WASHER (8)

-101-

CARBURETED ENGINE (T-61)

REF. NO.	PART NUMBER	DESCRIPTION

TAIL LIGHT AND GUARD
(Guide Lamp) (T-61 40272 up) - Continued

	43 041 DA	CABLE, junction block to tail light (†) No. 8 x 1/4" slt-rd-hd. mach. SCREW No. 8 internal-tooth lock WASHER
	18 369 D	NUT (911597) (2)

(†) - Illustrated with "Electric Starting and Lighting".

AUXILIARY REAR LIGHT (T-61 40272 up) - Continued

	278 910 R91	REAR LIGHT ASSEMBLY (Hobbs) (optional with 275 382 R91) (for components see list of parts under details of "Headlights and Rear Light")
	281 924 R1	SWIVEL, rear light (See NOTE 1) 1/2NF NUT 1/2NF x 2-1/2" hex-hd. cap SCREW 1/2" lock WASHER

NOTE 1 - Illustrated with "Brackets and Swivel."
NOTE 2 - Illustrated with "Electric Starting and Lighting".

REAR LIGHT BRUSH GUARD

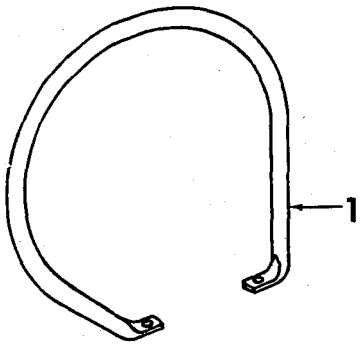

1	281 268 R2	GUARD, rear light brush 1/2NF NUT (2) 1/2NF x 1-3/4" hex-hd. cap SCREW (2) 1/2" lock WASHER (2)

REF. NO.	PART NUMBER	DESCRIPTION

CIGARETTE LIGHTER

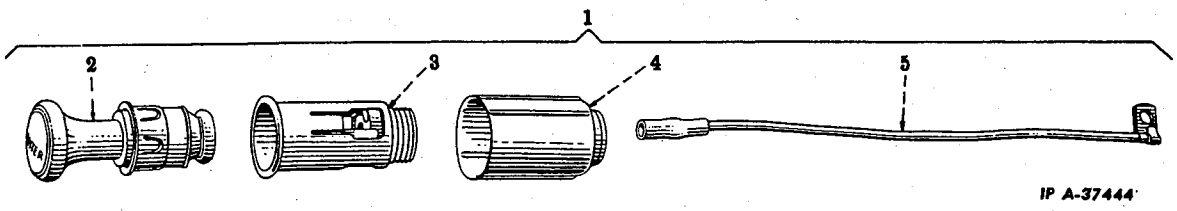

	278 729 R91	ATTACHMENT, cigarette lighter Factory Application - Order on Machine Order Form Field Application - Order through Regular Service Parts Channels
1	361 999 R91	LIGHTER w/BASE, 363 421 R91 and SHELL, 363 419 R1, cigarette (6 volt)

-102-

CARBURETED ENGINE (T-61)

REF. NO.	PART NUMBER	DESCRIPTION

CIGARETTE LIGHTER — Continued

2	363 420 R91	UNIT, pop-out
3	363 421 R91	BASE, switch
4	363 419 R1	SHELL, clamping
5		CABLE, cigarette lighter to "Acc" terminal (Not furnished separately (order 361 999 R91)

DASH LIGHT
(Guide Lamp)

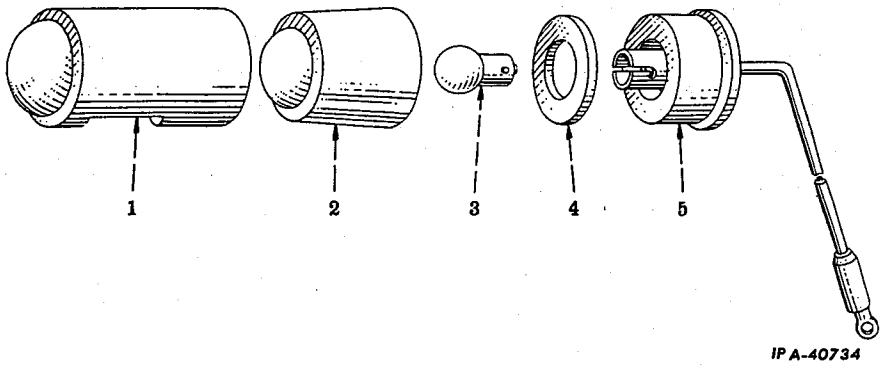

	275 389 R91	LIGHT ASSEMBLY, dash (898385)
1	271 588 R1	COVER (5946284)
2	89 884 R1	LENS, outlook glass (922042)
3	142 306	BULB (6 cp. 6 volt)

DASH LIGHT
(Guide Lamp) - Continued

4	89 883 R1	GASKET (923079)
5	271 589 R91	SOCKET and WIRING (5946283)
	89 886 R91	SCREW (923088) (2)

PRINTED IN UNITED STATES OF AMERICA

REF. NO.	PART NUMBER	DESCRIPTION

SPARK PLUGS, CABLES, DISTRIBUTOR OR MAGNETO DRIVE AND BRACKET
(TD-61 and TD-91)

-103-
ELECTRICAL SYSTEM
DIESEL ENGINE

REF. NO.	PART NUMBER	DESCRIPTION

SPARK PLUGS, CABLES, DISTRIBUTOR OR MAGNETO DRIVE AND BRACKET
(TD-61 and TD-91) - Continued

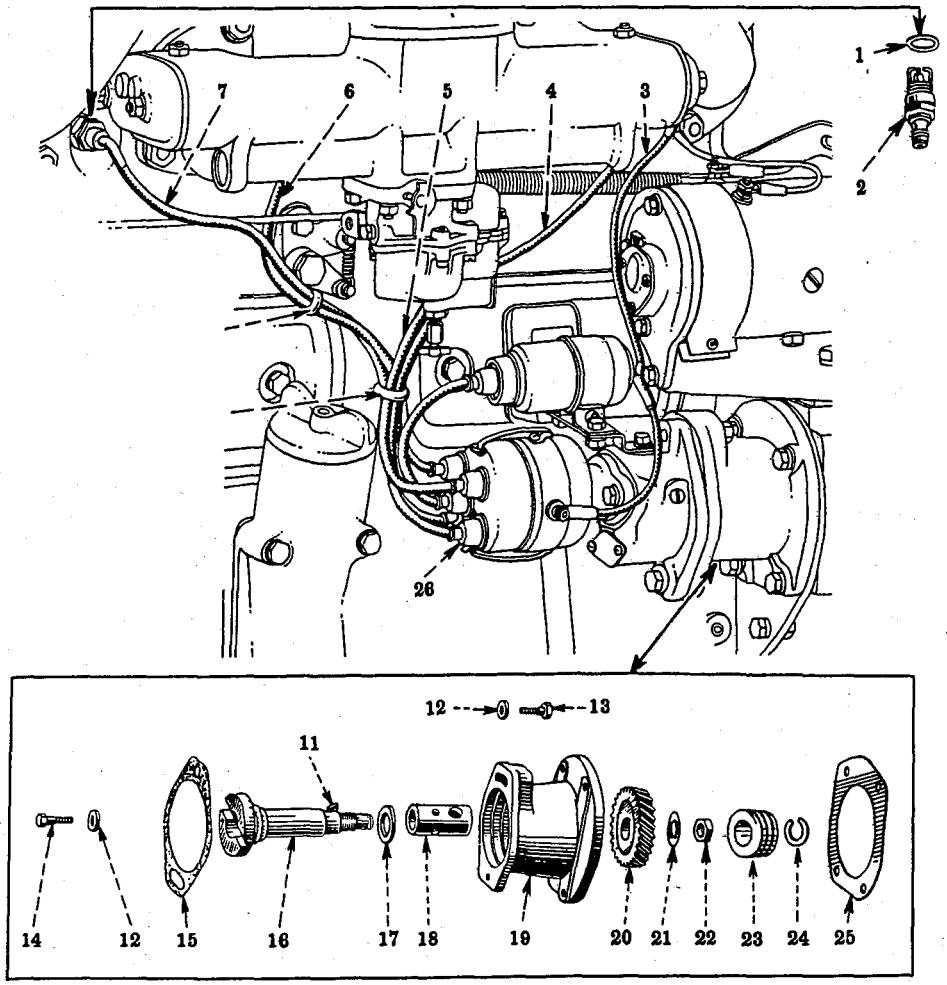

1	37 762 H	GASKET, spark plug (4)
2	262 456 R91	SPARK PLUG w/GASKET, 37 762 H (Champion 49) (18MM - 7/8" hex.) (optional with 50 309 DC or 258 938 R93) (4)
2	50 309 DC	SPARK PLUG w/GASKET, 37 762 H (AC 18-A) (18MM - 7/8" hex.) (optional with 264 456 R91 or 257 938 R93) (4)
2	258 938 R93	SPARK PLUG w/GASKET, 37 762 H (Auto-Lite BT-15) (18MM - 7/8" hex.) (optional with 50 309 DC or 262 456 R91) (4)
3	266 768 R91	CABLE, coil to manifold switch
4	266 783 R91	CABLE w/NIPPLE, 251 553 R1, No. 1 spark plug
5	266 778 R91	CABLE w/NIPPLE, 251 553 R1, No. 2 spark plug
6	266 780 R91	CABLE w/NIPPLE, 251 553 R1, No. 3 spark plug
7	267 826 R91	CABLE w/NIPPLE, 251 553 R1, No. 4 spark plug
8	263 314 R1	RING, 3/8" rubber (2)
9	263 313 R1	RING, 9/16" rubber
10	103 904	KEY, No. 2, 3/32 x 1/2" (Woodruff) (service meter drive gear)
11	124 543	KEY, No. 3, 1/8 x 1/2" (Woodruff) (distributor unit drive gear)
12	62 493 D	WASHER, battery ignition bolt (two used with magneto ignition)
13		SCREW, 3/8 x 1-7/8" hex-hd. cap 3/8" lock WASHER
14		SCREW, 3/8 x 1-1/4" hex-hd. cap 3/8" lock WASHER
15	55 780 DD	GASKET, distributor or magneto flange (*)

(*)- Also listed with Battery Ignition Unit.

PRINTED IN UNITED STATES OF AMERICA

REF. NO.	PART NUMBER	DESCRIPTION

SPARK PLUGS, CABLES, DISTRIBUTOR OR MAGNETO DRIVE AND BRACKET
(TD-61 and TD-91) - Continued

16	352 560 R1	SHAFT, distributor or magneto drive (See NOTE)
17	352 080 R91	OIL SEAL, distributor or magneto drive shaft (optional with 358 839 R91)
17	358 839 R91	OIL SEAL, distributor or magneto drive shaft (optional with 352 080 R91)
18	24 473 DA	BUSHING, distributor or magneto drive shaft
19	261 206 R11	BRACKET w/BUSHING, 24 473 DA and OIL SEAL, 352 080 R91, distributor or magneto (See NOTE) 3/8 x 1-3/8" hex-hd. cap SCREW (4) 3/8" lock WASHER (4)

BATTERY IGNITION UNIT
(TD-61 and TD-91)

-104-
ELECTRICAL SYSTEM
DIESEL ENGINE

REF. NO.	PART NUMBER	DESCRIPTION

SPARK PLUGS, CABLES, DISTRIBUTOR OR MAGNETO DRIVE AND BRACKET
(TD-61 and TD-91) - Continued

20	261 202 R1	GEAR, distributor or magneto drive (TD-91)
20	261 220 R1	GEAR, distributor or magneto drive (TD-61)
21	45 003 D	LOCK, distributor or magneto gear nut
22		NUT, jam 5/8NF
23	51 001 D	GEAR, service meter drive
24	21 362 D	RETAINER, service meter drive gear
25	261 203 R1	GASKET, distributor or magneto (See NOTE)
26	251 553 R1	NIPPLE, spark plug cable (4)

NOTE - Not used on tractors equipped with hydraulic remote control tractor attachment.

BATTERY IGNITION UNIT
(TD-61 and TD-91) - Continued

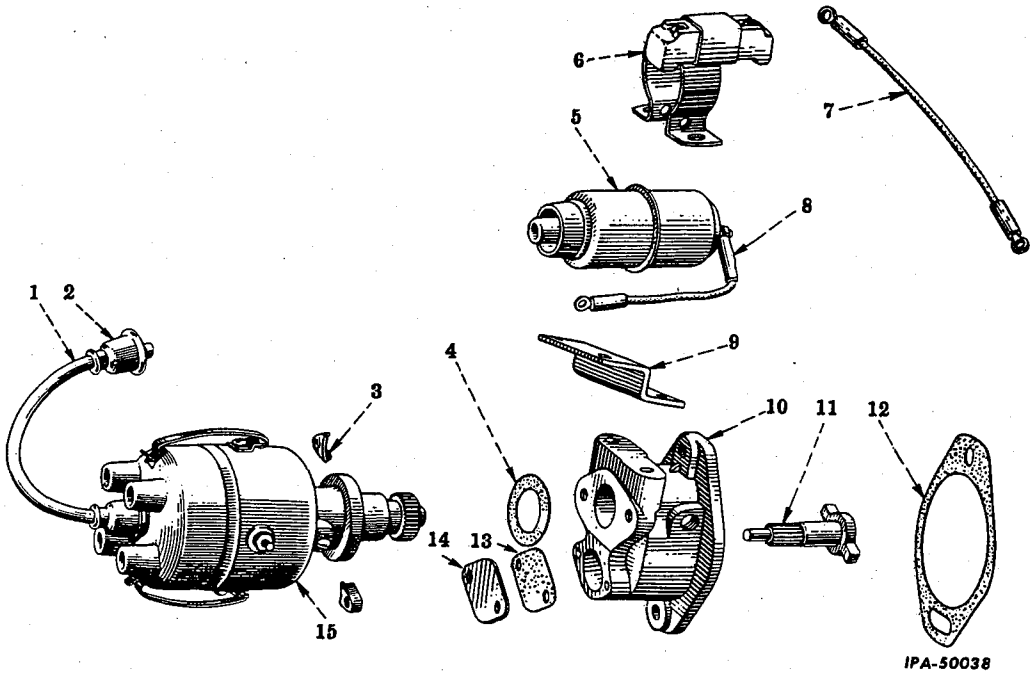

1	356 686 R92	CABLE w/two NIPPLES, 251 553 R1, coil to distributor secondary
2	251 553 R1	NIPPLE, secondary cable (2)
3	353 937 R1	CLAMP, distributor (2) 5/16 x 7/8" cd-pltd. hex-hd. cap SCREW (2) 5/16" cd-pltd. lock WASHER (2)
4	353 936 R2	GASKET, distributor
5	365 783 R91	COIL, ignition (12 volt diesel) (will work for 353 875 R91) (TD-61M 501 to 2089) (TD-91M 501 to 5777)
5	368 839 R91	COIL, ignition (TD-61M 2090 up) (TD-91M 5778 up) No. 10NF cd-pltd. NUT (2) No. 10 cd-pltd. lock WASHER (2)
6	353 889 R91	CLAMP, coil (not resistor type) (TD-61M 501 to 2089) (TD-91M 501 to 5777)
6	368 843 R91	CLAMP w/RESISTOR, coil (TD-61M 2090 up) (TD-91M 5778 up) No. 10NF sq-type "F" NUT No. 10NF x 1-1/4" cd-pltd. slt-rd-hd. mach. SCREW No. 10 cd-pltd. lock WASHER
7	357 929 R92	CABLE, resistor to coil (TD-61M 2090 up) (TD-91M 5778 up)
8	357 929 R92	CABLE, primary coil to distributor

PRINTED IN UNITED STATES OF AMERICA

REF NO	PART NUMBER	DESCRIPTION

BATTERY IGNITION UNIT
(TD-61 and TD-91) - Continued

9	353 941 R1	BRACKET, ignition coil 5/16" NUT (2) 5/16 x 5/8" cd-pltd. hex-hd. cap SCREW (4) 5/16" cd-pltd. lock WASHER (4) 11/32 x 11/16" x 16 ga. cd-pltd. WASHER (6)
10	363 763 R11	HOUSING w/PLUG, 103 883, distributor drive 3/8 x 1-1/4" hex-hd. cap SCREW 3/8 x 1-7/8" hex-hd. cap SCREW 3/8" lock WASHER (2)
11	353 934 R11	SHAFT, distributor drive
12	55 780 DD	GASKET, distributor drive housing (See NOTE)

-105-
ELECTRICAL SYSTEM
DIESEL ENGINE

REF. NO.	PART NUMBER	DESCRIPTION

BATTERY IGNITION UNIT
(TD-61 and TD-91) - Continued

13	363 765 R1	GASKET, distributor drive housing hole cover
14	363 764 R1	COVER, distributor drive housing hole No. 10NF x 9/16" cd-pltd. slt-rd-hd. mach. SCREW (2) No. 10 cd-pltd. lock WASHER (2)
15	353 892 R91	DISTRIBUTOR ASSEMBLY (for components see list of parts under details of "Distributor") (will work for 356 657 R91)
	103 883	PLUG, 1/8" slt-hdls. pipe
		NOTE - Not part of Battery Ignition Unit assembly.

BATTERY IGNITION DISTRIBUTOR
International Type H (TD-61 and TD-91)

BATTERY IGNITION DISTRIBUTOR
International Type H (TD-61 and TD-91) - Continued

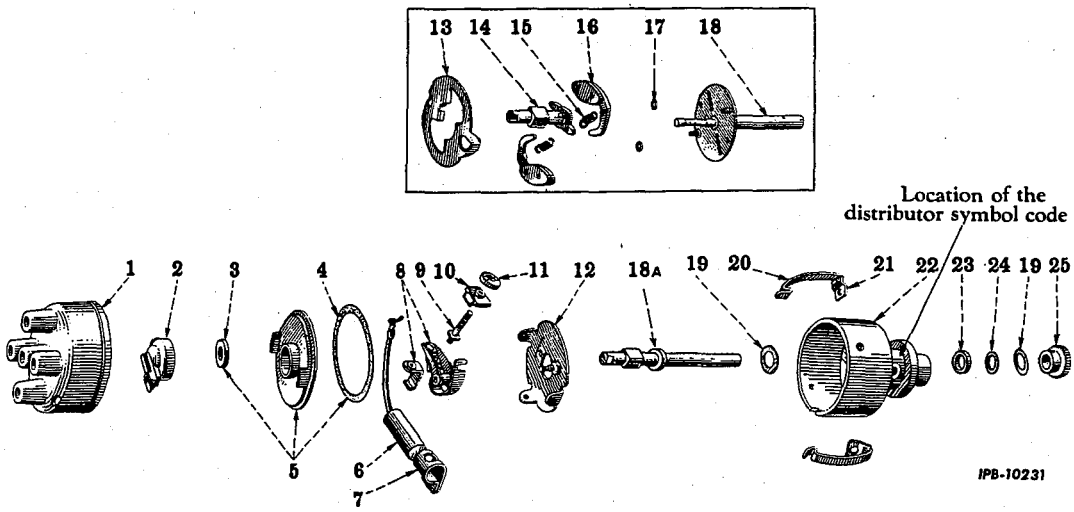

⊗ - KEY TO UNITS

A -	356 657 R91	DISTRIBUTOR ASSEMBLY (with 8° advance shaft) (clockwise rotation looking from drive end) (order 353 892 R91)
B -	353 892 R91	DISTRIBUTOR ASSEMBLY (with fixed advance shaft) (clockwise rotation looking from drive end) (will work for 356 657 R91)

⊗ Letters of these units correspond with those shown following the description of the parts in the list below and identifies the unit for which the part is used. Items without letters after the description indicates the part is used for all units.

1	351 693 R92	CAP, distributor
2	353 896 R91	ROTOR, distributor
3	353 901 R2	SEAL, breaker cover felt
4	352 284 R2	GASKET, breaker cover
5	353 900 R11	COVER w/SEAL, 353 901 R2 and GASKET, 352 284 R2, breaker
6	353 903 R92	CONDENSER
7	353 905 R1	CLAMP, condensed No. 8 x 3/16" cd-pltd. slt-fil-hd. mach. SCREW No. 8 cd-pltd. lock WASHER
8	353 172 R91	PACKAGE, breaker arm and stationary point No. 8 x 3/16" cd-pltd. slt-pan-hd. mach. SCREW
9	353 907 R1	SCREW, terminal No. 8 cd-pltd. NUT (3) No. 8 cd-pltd. lock WASHER (3)
10	353 906 R1	INSULATOR, spring anchor terminal
11	251 538 R1	WASHER, terminal insulating
12	352 277 R11	PLATE, breaker No. 8 x 3/8" cd-pltd. slt-rd-hd. mach. SCREW No. 8 cd-pltd. lock WASHER
13	353 920 R1	GUARD, governor weight (Unit A) No. 8 x 3/16" cd-pltd. slt-fil-hd. mach. SCREW No. 8 cd-pltd. lock WASHER
14	355 725 R91	CAM w/FELT, 355 460 R1 (Unit A)
15	353 919 R1	SPRING, governor (6-1/2 coils) (Unit A)
16	353 917 R91	ARM, weight (2 for Unit A)
17	352 293 R1	SPACER, weight arm (4 for Unit A)
18	356 659 R91	SHAFT, distributor (8° advance) (Unit A)

PRINTED IN UNITED STATES OF AMERICA

REF. NO.	PART NUMBER	DESCRIPTION

BATTERY IGNITION DISTRIBUTOR
International Type H (TD-61 and TD-91) - Continued

18A	353 930 R1	SHAFT, distributor (fixed advance) (Unit B)
19	352 298 R1	WASHER, distributor thrust (2)
20	353 894 R1	SPRING, distributor cap (2)
21	353 895 R1	SUPPORT, distributor cap spring (2) No. 8 x 3/8" cd-pltd. slt-rd-hd. mach. SCREW (2) No. 8 cd-pltd. lock WASHER (2)

MAGNETO, International Type H-4
(TD-61 and TD-91)

-106-
ELECTRICAL SYSTEM
DIESEL ENGINE

REF. NO.	PART NUMBER	DESCRIPTION

BATTERY IGNITION DISTRIBUTOR
International Type H (TD-61 and TD-91) - Continued

22	353 898 R11	HOUSING w/OIL SEAL, 252 739 R1, RETAINER, 353 899 R1 and PLUG, 125 947, distributor
	125 947	PLUG, 1/8" slt. cd-pltd. pipe
23	353 899 R1	RETAINER, distributor shaft oil seal (brass)
24	252 739 R1	OIL SEAL, distributor shaft
25	353 902 R1	GEAR, distributor
	354 552 R1	PIN, distributor gear
	355 460 R1	FELT, cam oil hole
	21 394 D	WASHER, stationary point and terminal (3)

MAGNETO, International Type H-4
(TD-61 and TD-91) - Continued

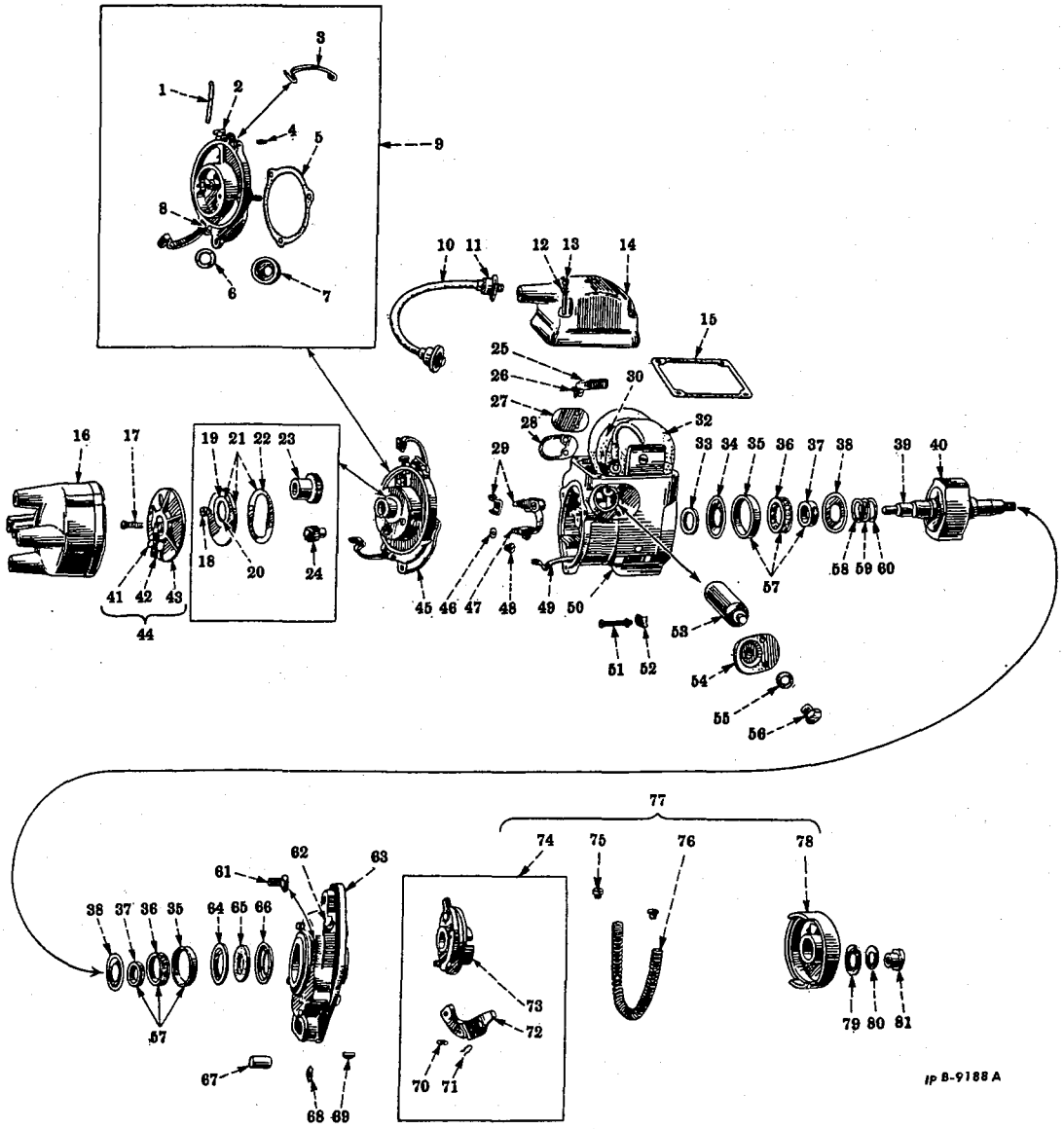

MAGNETO, International Type H-4
(TD-61 and TD-91) - Continued

PRINTED IN UNITED STATES OF AMERICA

MAGNETO
(Wico Electric Company)

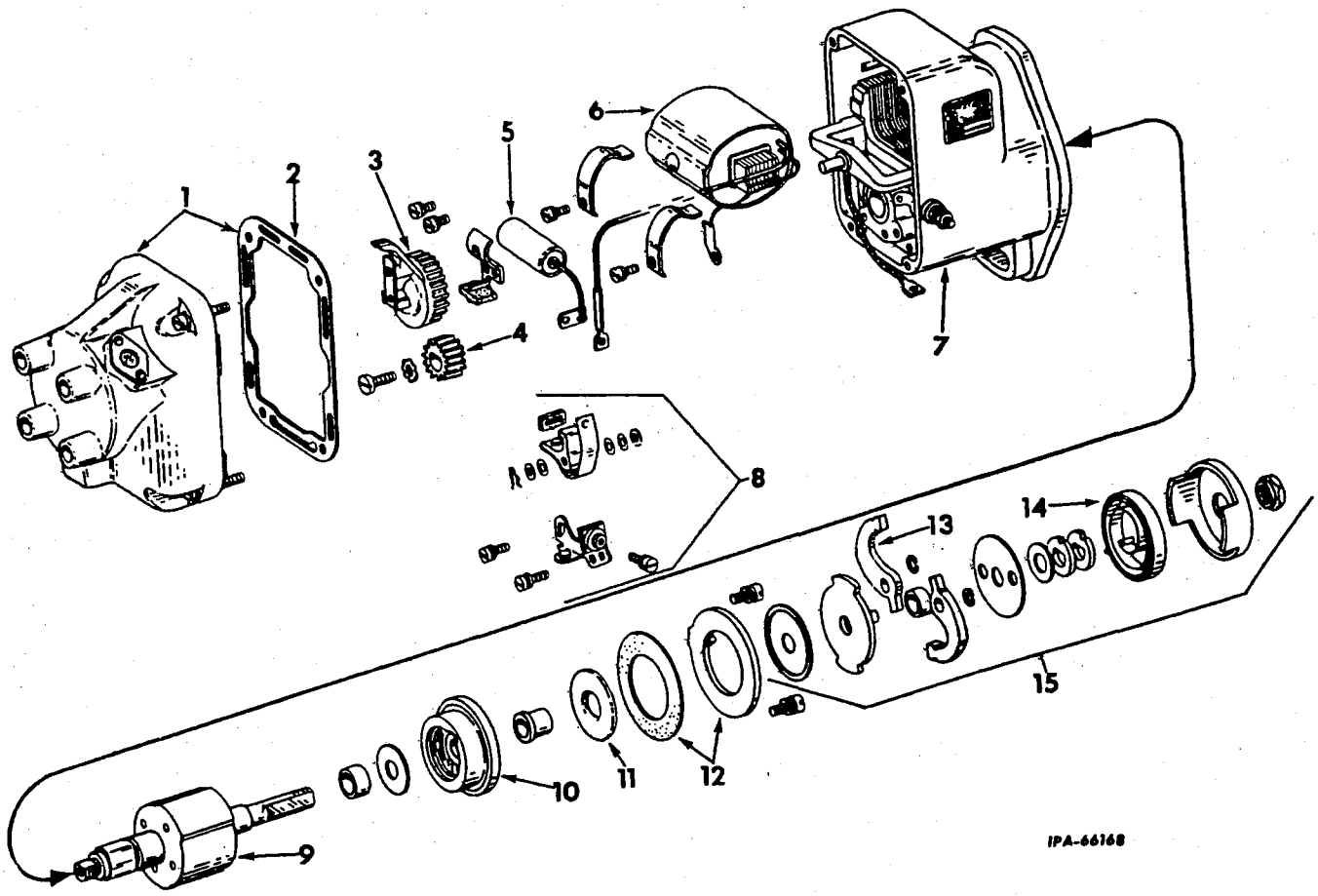

Ref. No.	IH Part Number	Mfr's. Number	Description	No. Req'd.
	374 866 R91	XHD-2656	MAGNETO, assembly (will work for 49 094 DD) ⊛ (Consists of the following parts -	1
1	375 302 R91	X-5777	CAP, distributor, assembly	1
2	375 303 R 1	5618	GASKET, distributor cap	1
3	375 304 R91	X-9564	ARM, distributor, assembly	1
4	375 307 R1	6865	GEAR, pinion	1
5	375 306 R91	X-6916	CONDENSER	1
6	375 305 R91	X-6936B	COIL	1
7	375 309 R91	6950	HOUSING, assembly	1
8	375 308 R91	X-6942	BREAKER POINT SET	1
9	375 311 R1	Y-6912	ROTOR	1
10	375 312 R91	X-5521	CAGE, bearing, assembly	1
11	375 313 R1	6199	OIL SEAL	1
12	375 314 R91	X-5549	STOP, impulse, assembly	1
13	375 320 R1	A-179X	ARM, trip	2
14	375 321 R1	15-186	SPRING, drive	1
15	375 316 R91	X-12490	COUPLING, impulse, assembly	1
			⊛ - Parts illustrated without reference numbers are not furnished separately.	

ELECTRICAL SYSTEM
DIESEL ENGINE

REF. NO.	PART NUMBER	DESCRIPTION
		MAGNETO, International Type H-4 (TD-61 and TD-91) - Continued
	49 094 DD	MAGNETO ASSEMBLY (counterclockwise) 3/8 x 1-7/8" hex-hd. cap SCREW 3/8 x 1-1/2" hex-hd. cap SCREW 3/8" lock WASHER (2)
1	E4 216	FELT, oil well 3/8 x 1-7/8" hex-hd. cap SCREW
2	E4 295	OILER
3	51 666 D	SPRING, distributor cap (2)
4	47 424 D	PIN, distributor cap locating
5	47 408 D	GASKET, distributor body
6	49 424 D	RETAINER, distributor body felt seal
7	49 423 D	SEAL, distributor body felt
8	51 667 D	PIN, distributor cap spring (2)
9	6 483 DAY	BODY ASSEMBLY, distributor (Composed of - §1 BODY 1 FELT E4 216 1 GASKET 47 408 D 1 OILER E4 295 1 PIN 47 424 D 2 PIN 51 667 D 1 RETAINER 49 424 D 1 SEAL 49 423 D §1 SHAFT 2 SPRING 51 666 D) No. 10NF x 3/4" fil-hd. mach. SCREW (3) No. 10 lock WASHER (3)
10	356 686 R92	CABLE, coil to distributor
11	251 553 R1	NIPPLE, coil to distributor cable (2)
12	38 609 DA	WASHER, coil cover mounting (4)
13	131 997	Follows Reference No. 14
14	47 449 DAY	COVER w/STRAP, 47 452 D, coil No. 8 x 1-1/2" cd-pltd. slt-fil-hd. mach. SCREW (4)
15	47 453 D	GASKET, coil cover
16	47 413 DXC	CAP, distributor
16	47 413 DYC	CAP, 47 413 DXC, w/BRUSH, 21 350 DXA, 32 032 DXA or 356 622 R11, distributor
17	21 350 DXA	BRUSH w/SPRINGS, distributor (optional with 32 032 DXA or 356 622 R11)
17	32 032 DXA	BRUSH w/SPRING, distributor (optional with 21 350 DXA or 356 622 R11)
17	356 622 R11	BRUSH w/SPRING, distributor (optional with 32 032 DXA or 21 350 DXA)
18		Follows Reference No. 21
19	49 417 D	RETAINER, distributor gear cover felt seal
20	49 418 D	SEAL, distributor gear cover felt
21	49 416 DX	COVER ASSEMBLY, distributor gear (Composed of - §1 COVER 1 GASKET 49 419 D 1 RETAINER 49 417 D 1 SEAL 49 418 D) No. 8 x 1/2" cd-pltd. slt-rd-hd. mach. SCREW (2) No. 8 cd-pltd. lock WASHER (2)
22	49 419 D	GASKET, distributor gear cover
23	49 420 DX	GEAR, distributor (24 T)
24	47 417 DX	PINION, rotor

ALWAYS give MAGNETO NUMBER when ordering PARTS

ELECTRICAL SYSTEM
DIESEL ENGINE

REF. NO.	PART NUMBER	DESCRIPTION
		MAGNETO, International Type H-4 (TD-61 and TD-91) - Continued
25	47 452 D	STRAP, secondary leadout No. 4NF x 5/16" slt-pan-hd. mach. SCREW No. 4 cd-pltd. heavy lock WASHER
26		Follows Reference No. 25
27	55 015 D	COVER, condenser hole No. 8 x 3/8" cd-pltd. slt-rd-hd. mach. SCREW (2) No. 8 cd-pltd. lock WASHER (2)
28	359 966 R1	GASKET, condenser hole cover (2)
29	353 171 R91	PACKAGE, breaker arm and stationary point No. 8 x 5/16" cd-pltd. slt-pan-hd. mach. SCREW
30	21 314 DX	COIL w/two INSULATORS, 49 593 D
32	49 593 D	INSULATOR, coil end (2)
33	E4 226	FELT, bearing
34	47 454 D	RETAINER, inner bearing felt
35	ST 601	RACE, outer rotor shaft ball bearing (IH-15-0) (2)
36	ST 602	RETAINER w/BALLS, rotor shaft ball bearing (IH-15 R. U.) (2)
37	ST 600	RACE, inner rotor shaft ball bearing (IH-15-1) (2)
38	E4A 324	FLINGER, oil (2)
39	60 094 D	CAM, breaker
40	354 981 R92	ROTOR ASSEMBLY (Composed of - 1 CAM 60 094 D 2 FLINGER E4A 324 1 KEEPER 57 314 D 1 KEY 106 749 2 RACE ST 600 2 RETAINER ST 602 §1 ROTOR X SHIM E4 212 X SHIM E4A 305 X SHIM E4A 372)
41	47 427 D	NUT, distributor rotor No. 6 cd-pltd. lock WASHER (light)
42	47 428 DA	ARM, distributor
43	47 425 DY	ROTOR, distributor
44	47 425 DY	ROTOR w/ARM, 47 428 DA, NUT, 47 427 D, and ROTOR, 47 425 DX, distributor
45	56 066 DA	DISTRIBUTOR ASSEMBLY (Composed of - 1 BODY 6 483 DAY 1 COVER 49 416 DX 1 GEAR 49 420 DX 1 PINION 47 417 DX)
46	21 394 D	WASHER, stationary point support and terminal No. 8 x 5/16" cd-pltd. slt-pan-hd. mach. SCREW
47	47 432 D	ANCHOR, spring No. 8 cd-pltd. NUT No. 8 x 3/8" cd-pltd. slt-fil-hd. mach. SCREW No. 8 cd-pltd. lock WASHER
48		Follows Reference No. 46
49	47 433 DX	CABLE, primary leadout

§ - Not Furnished Separately
X - As Required

ALWAYS give MAGNETO NUMBER when ordering PARTS

REF. NO.	PART NUMBER	DESCRIPTION
		MAGNETO, International Type H-4 (TD-61 and TD-91) - Continued
50	6 482 DAY	FRAME ASSEMBLY (Composed of - 1 COVER 55 015 D; 1 FELT E4 226; §1 FRAME; 2 GASKET 359 966 R1; §1 POST; 1 RACE ST 601; 1 RETAINER 47 454 D)
51		Follows Reference No. 52
52	48 339 D	CLIP, condenser; No. 8 x 1-1/4" cd-pltd. slt-fil-hd. mach. SCREW; No. 8 cd-pltd. lock WASHER
53	21 409 DB	CONDENSER
54	359 704 R1	INSULATOR, short circuiting terminal; No. 8 x 1/2" cd-pltd. slt-rd-hd. mach. SCREW (2); No. 8 cd-pltd. lock WASHER (2)
	38 609 DA	WASHER, terminal insulator screw
55	359 965 R1	WASHER, short circuiting terminal lock; 1/4" cd-pltd. lock WASHER
56	359 967 R1	TERMINAL, short circuiting
57	ST 307	BEARING, rotor shaft ball (IH-M-15) (2)
58	E4A 305	SHIM, rotor (light) (X)
59	E4 4 212	SHIM, rotor (medium) (X)
60	E4A 372	SHIM, rotor (heavy) (X)
61		Follows Reference No. 63
62	27 311 D	OILER, impulse coupling
63	6 783 DAX	FLANGE ASSEMBLY, mounting (Composed of - §1 FLANGE; 1 OILER 27 311 D; §1 OIL SEAL; 1 PIN 47 468 DA; 1 RACE ST 601; §1 WASHER; §1 WASHER); 1/4 x 9/16" slt-fil-hd. mach. SCREW (4); 1/4" lock WASHER (csk.) (4)
64	353 053 R1	WASHER, inner oil retainer (order 353 051 R91)
65	353 050 R1	OIL SEAL (order 353 051 R91)
66	353 052 R1	WASHER, outer oil retainer (order 353 051 R91)
67	47 468 DA	PIN, impulse coupling stop
68		WASHER, 1/4" external-tooth csk. lock (4)
69	106 749	KEY, No. 3, 1/8 x 1/2" (Woodruff) (impulse coupling)
70	24 610 D	WASHER, pawl pin (2)
71	30 114 D	RING, pawl pin snap (2)
72	358 006 R1	PAWL (2)
73	358 005 R1	MEMBER, magneto
74	358 004 R91	MEMBER w/PAWLS ASSEMBLY, magneto (Composed of - 1 MEMBER 358 005 R11; 2 PAWL 358 006 R1; 2 RING 30 114 D; 2 WASHER 24 610 D)
75	251 555 R1	BUTTON, spring end (2)
76	47 822 D	SPRING, coupling magneto

ALWAYS give MAGNETO NUMBER when ordering PARTS

REF. NO.	PART NUMBER	DESCRIPTION
		MAGNETO, International Type H-4 (TD-61 and TD-91) - Continued
77	358 003 R91	ROTATING ASSEMBLY, unit (Composed of - 2 BUTTON 251 555 R1; 1 MEMBER 358 004 R91; 1 MEMBER 358 005 R11; 1 MEMBER 358 007 R1; 1 SPRING 47 822 D)
78	358 007 R91	MEMBER, drive
79	24 603 D	WASHER, magneto drive member lock
80	251 591 R1	WASHER, 1/2" impulse coupling cd-pltd. lock
81	47 470 D	NUT, impulse coupling
	57 755 D	GAUGE, breaker point
	21 372	GREASE, tube of magneto (furnished when ordered)
	359 766 R91	GREASE, magneto ball bearing (X)
	57 314 D	KEEPER, magneto
	353 051 R91	PACKAGE, service oil seal (Composed of - §1 SEAL; §1 SHIM; 2 SHIM E4 212; 2 SHIM E4A 305; 2 SHIM E4A 372; §1 WASHER; §1 WASHER); 1/4" cd-pltd. lock WASHER
	359 967 R1	TERMINAL, short circuiting
	69 398 D	VARNISH, electrical insulating (1 pint) (X)
	47 474 D	WASHER, inner oil retainer (order 353 051 R91)

§ - Not Furnished Separately
X - As Required

ALWAYS give MAGNETO NUMBER when ordering PARTS

BATTERY IGNITION PUSH-PULL SWITCH
(TD-61 and TD-91)

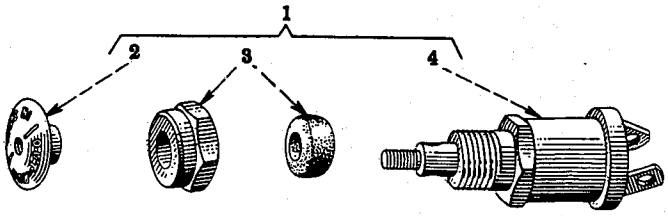

IPA-22770A

REF. NO.	PART NUMBER	DESCRIPTION
1	62 801 DC	SWITCH, battery ignition push-pull
	64 022 H	SCREW, No. 8 x 5/16" slt-spec-hd. (2); No. 8 cd-pltd. lock WASHER (2)
2	8 732 D	KNOB, switch; No. 10 cd-pltd. lock WASHER
3	56 517 DX	NUT w/SEAL, switch mounting; 9/16" cd-pltd. internal-tooth lock WASHER
4		SWITCH, battery ignition (order 62 801 DC)
	57 937 D	SPACER, battery ignition switch

ALWAYS give SWITCH NUMBER when ordering PARTS

REF. NO.	MFR'S. NUMBER	DESCRIPTION

BATTERY IGNITION LOCK SWITCH
(Delco-Remy) (TD-61 and TD-91)

-109-
ELECTRICAL SYSTEM
DIESEL ENGINE

REF. NO.	MFR'S. NUMBER	DESCRIPTION

BATTERY IGNITION LOCK SWITCH
(Delco-Remy) (TD-61 and TD-91) - Continued

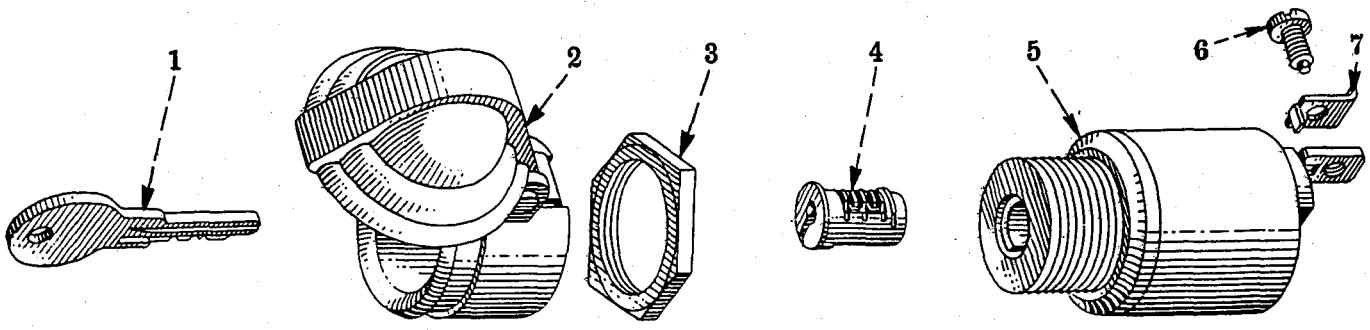

IPA-42144

		ATTACHMENT, ignition lock switch (I.H. No. 275 911 R91) (See NOTE)
1		KEY (order 1842770)
2	1923400	NUT w/hinge PIN and SPRING, mounting
3	1923405	NUT
4	1842770	LOCK w/two KEYS
5		BODY, switch (order I.H. No. 263 524 R92)
6	1864099	SCREW, terminal (3)
7	1855978	CLIP, lock (terminal) (3)
		BRACKET, mounting ignition lock switch (I.H. No. 275 912 R1)
		COVER, ignition switch (rubber) (I.H. No. 263 692 R1)
		PLUG, ignition switch hole (5/8" button plug) (I.H. No. 432 482)
	1116513	SWITCH ASSEMBLY, ignition lock (I.H. No. 263 524 R92) (Composed of -

§1	BODY	
3	CLIP	1855978
1	LOCK	1842770
1	NUT	1923400
1	NUT	1923405
3	SCREW	1864099)

§ - Not Furnished Separately
NOTE - Factory Application - Order on machine Order Form.
Field Application - Order through Regular Service Parts Channels.

ALWAYS give SWITCH NUMBER when ordering PARTS
PRINTED IN UNITED STATES OF AMERICA

REF. NO.	PART NUMBER	DESCRIPTION

GENERATOR AND CONNECTIONS
(Standard) (Delco-Remy) (TD-61)

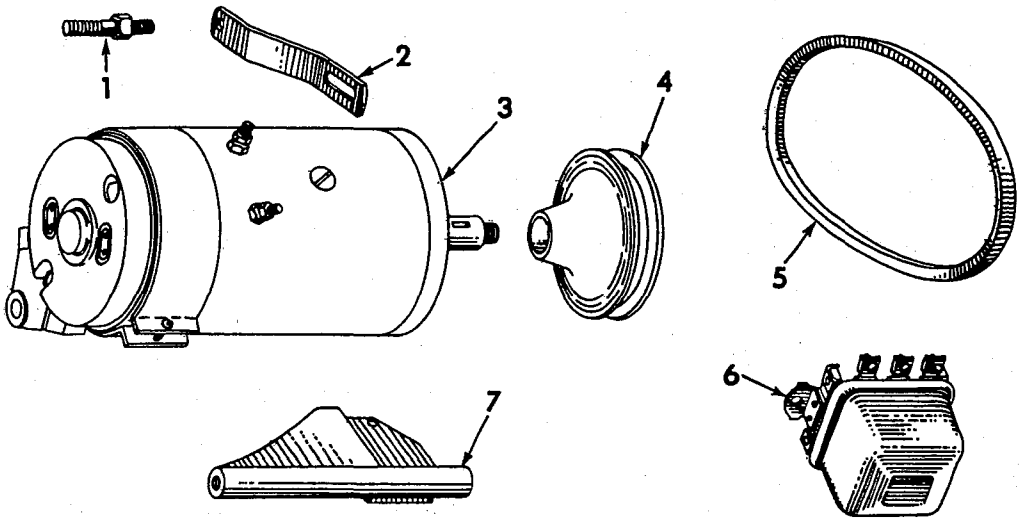

IPA-43331

1	47 877 D	STUD, generator brace 3/8NF NUT 3/8" lock WASHER
2	275 387 R1	BRACE, generator 3/8NF NUT 5/16 x 3/4" hex-hd. cap SCREW 13/32 x 13/16" x No. 16 ga. stl. WASHER 3/8" lock WASHER
3	275 697 R91	GENERATOR ASSEMBLY w/o PULLEY (Delco-Remy No. 1105109) (standard) (for components see list of parts under details of "Generator")

-110-
ELECTRICAL SYSTEM
DIESEL ENGINE

REF. NO.	PART NUMBER	DESCRIPTION

GENERATOR AND CONNECTIONS
(Standard) (Delco-Remy) (TD-61) - Continued

4	275 696 R1	PULLEY, generator
5	49 341 D	BELT, generator
6	273 299 R91	REGULATOR ASSEMBLY, voltage (Delco-Remy No. 1119152) (standard) (for components see list of parts under details of "Voltage Regulator")
7	275 699 R1	BRACKET, generator 7/16 x 1-1/2" hex-hd. cap SCREW (2) 7/16" lock WASHER (2)

GENERATOR AND CONNECTIONS
(TD-91)

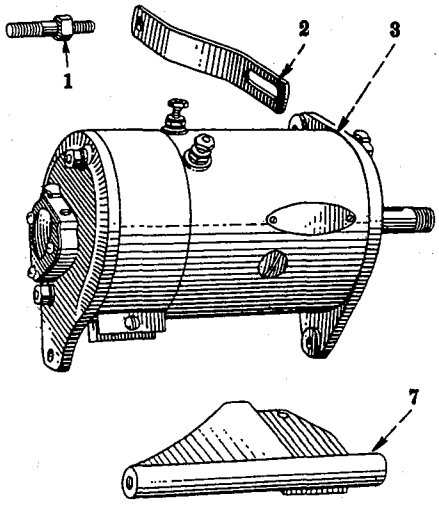

GENERATOR AND CONNECTIONS
(TD-91) - Continued

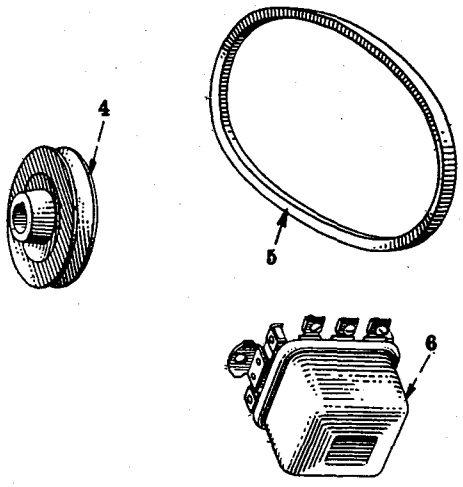

IPA-42737

ALWAYS give GENERATOR NUMBER when ordering PARTS

ALWAYS give GENERATOR NUMBER when ordering PARTS

PRINTED IN UNITED STATES OF AMERICA

ELECTRICAL SYSTEM
DIESEL ENGINE

REF. NO.	PART NUMBER	DESCRIPTION

GENERATOR AND CONNECTIONS
(TD-91) - Continued

1	49 502 D	STUD, generator brace 3/8NF NUT 3/8" lock WASHER
2	275 695 R1	BRACE, generator 3/8NF NUT 3/8NF x 7/8" hex-hd. cap SCREW 3/8" lock WASHER 11/32 x 13/16" x No. 16 ga. stl. WASHER
3	275 697 R91	GENERATOR ASSEMBLY w/o PULLEY (Delco-Remy No. 1105109) (standard) (for components see list of parts under details of "Generator")
3	277 174 R91	GENERATOR ASSEMBLY, high output (Delco-Remy No. 1105111) (for components see list of parts under details of "Generator (high output)" 3/8 x 1-1/4" hex-hd. cap SCREW (2) 3/8" lock WASHER (2)

REF. NO.	MFR'S. NUMBER	DESCRIPTION

GENERATOR
(Standard) (Delco-Remy) (TD-61 and TD-91)

-111-

ELECTRICAL SYSTEM
DIESEL ENGINE

REF. NO.	PART NUMBER	DESCRIPTION

GENERATOR AND CONNECTIONS
(TD-91) - Continued

4	275 696 R1	PULLEY, generator
5	49 341 D	BELT, generator
6	273 299 R91	REGULATOR ASSEMBLY, voltage (Delco-Remy No. 1119152) (standard) (for components see list of parts under details of "Voltage Regulator")
6	277 175 R91	REGULATOR ASSEMBLY, voltage, high output (Delco-Remy No. 1119181) (for components see list of parts under details of "Voltage Regulator (high output)" 1/4NF NUT (4) 1/4 x 1" slt-rd-hd. mach. SCREW (4) 1/4" internal-tooth lock WASHER (4)
7	275 699 R1	BRACKET, generator 7/16 x 1-1/2" hex-hd. cap SCREW (2) 7/16" lock WASHER (2)

REF. NO.	MFR'S. NUMBER	DESCRIPTION

GENERATOR
(Standard) (Delco-Remy) (TD-61 and TD-91) - Continued

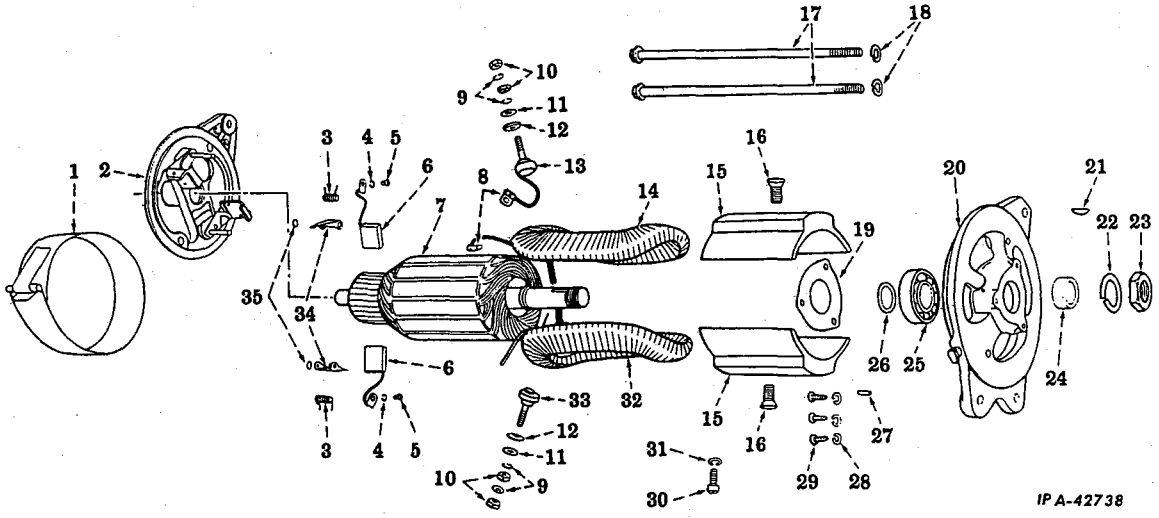

	1105109	GENERATOR ASSEMBLY (not high output) (I.H. Part No. 275 697 R91) 3/8 x 1-1/4" hex-hd. cap SCREW (2) 3/8" lock WASHER (2)
1	1879530	BAND, cover
	132923	SCREW, cover band
2	1936330	FRAME and HOLDER w/PIN, 809062, commutator end brush
	1929959	RING, bearing retainer
3	1878184	SPRING, brush (2)
4	1904377	WASHER, brush lead attaching lock (2)
5	141541	SCREW, brush lead attaching (2)
6	1906965	BRUSH (2)
7	1940161	ARMATURE

ALWAYS give GENERATOR NUMBER when ordering PARTS

8	200362	CLIP, terminal to brush
9	1904661	WASHER, terminal stud lock (4)
10	121743	NUT, terminal stud (4)
11	1881409	WASHER, terminal stud (2)
12	1902746	WASHER, terminal stud insulating (2)
13	1858751	STUD, terminal
14	1923472	COIL, RH field
15	1918004	SHOE, pole (2)
16	1883864	SCREW, pole shoe (2)
17	809763	BOLT, thru (2)
18	120638	WASHER, thru bolt lock (2)
19	1911263	PLATE, ball bearing retainer drive end
20	1936333	FRAME, drive end
21	124548	KEY, No. 8, 5/32 x 3/4" (Woodruff)

ALWAYS give GENERATOR NUMBER when ordering PARTS

PRINTED IN UNITED STATES OF AMERICA

ELECTRICAL SYSTEM
DIESEL ENGINE

REF. NO.	MFR'S. NUMBER	DESCRIPTION
		GENERATOR (Standard) (Delco-Remy) (TD-61 and TD-91) - Continued
22	804000	WASHER, shaft nut lock
23	806915	NUT, shaft
24	1858603	COLLAR, drive end outside space
25	900529	BEARING, drive end ball
26	809945	COLLAR, drive end inside space
27	809062	PIN, commutator end and drive end dowel (2)
28	1880371	WASHER, ball bearing retainer plate attaching screw lock (3)
29	1904370	SCREW, ball bearing retainer plate attaching (3)

REF. NO.	PART NUMBER	DESCRIPTION
		GENERATOR AND CONNECTIONS (High Output) (Delco-Remy) (TD-61 40272 up)

-112-

ELECTRICAL SYSTEM
DIESEL ENGINE

REF. NO.	MFR'S. NUMBER	DESCRIPTION
		GENERATOR (Standard) (Delco-Remy) (TD-61 and TD-91) - Continued
30	131238	SCREW, frame
31	120380	WASHER, frame lock
32	1923473	COIL, LH field
33	1858751	STUD, terminal
34	1878183	ARM, brush (2)
35	1857412	WASHER, brush arm space (2)
	900529	BEARING, commutator end ball
	1885090	INSULATOR, terminal (2)

REF. NO.	PART NUMBER	DESCRIPTION
		GENERATOR AND CONNECTIONS (High Output) (Delco-Remy) (TD-61 40272 up)

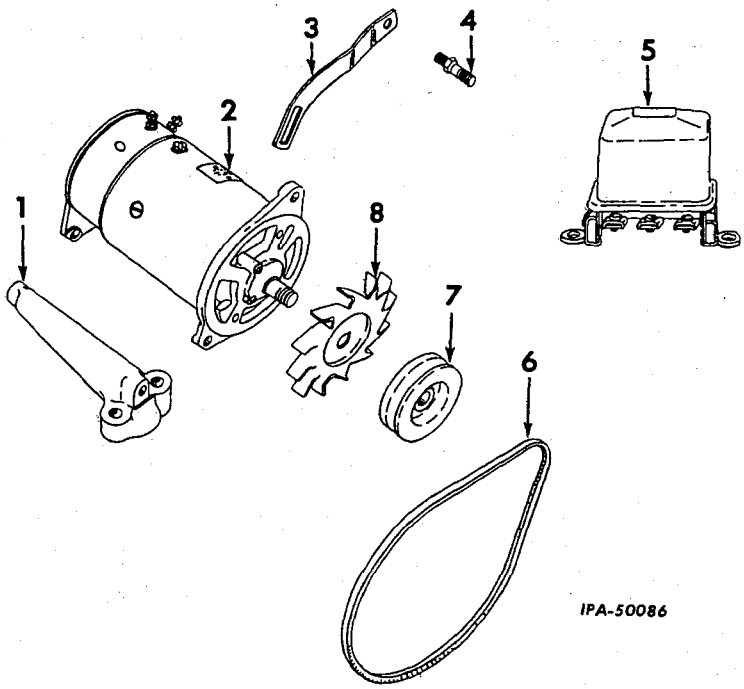

1	273 994 R1	BRACKET, generator 7/16 x 2" hex-hd. cap SCREW (2) 7/16" lock WASHER (2)
2	277 384 R91	GENERATOR ASSEMBLY w/o PULLEY (Delco-Remy No. 1100342) (for components see list of parts under details of "Generator (High Output)" 5/16 x 1" hex-hd. cap SCREW (2) 5/16" lock WASHER (2)
3	282 790 R1	BRACE, generator 3/8NF NUT 5/16 x 3/4" hex-hd. cap SCREW 11/32 x 11/16" x No. 16 ga. stl. WASHER 3/8" lock WASHER 5/16" internal-external tooth lock WASHER
4	47 877 D	STUD, generator brace 3/8NF NUT 3/8" lock WASHER
5	277 175 R91	REGULATOR ASSEMBLY, voltage (Delco-Remy No. 1119181) (for components see list of parts under details of "Voltage Regulator") 1/4NF NUT (4) 1/4NF x 1-1/4" slt-rd-hd. mach. SCREW (4) 1/4" lock WASHER (4)
6	282 655 R1	BELT, generator
7	282 654 R1	PULLEY, generator
8	90 426 H	FAN, generator ventilating

ALWAYS give GENERATOR NUMBER when ordering PARTS

ALWAYS give GENERATOR NUMBER when ordering PARTS

REF. NO.	MFR'S. NUMBER	DESCRIPTION

GENERATOR (High Output)
(Delco-Remy) (TD-61 40272 up)

-113-
ELECTRICAL SYSTEM
DIESEL ENGINE

REF. NO.	MFR'S. NUMBER	DESCRIPTION

GENERATOR (High Output)
(Delco-Remy) (TD-61 40272 up) - Continued

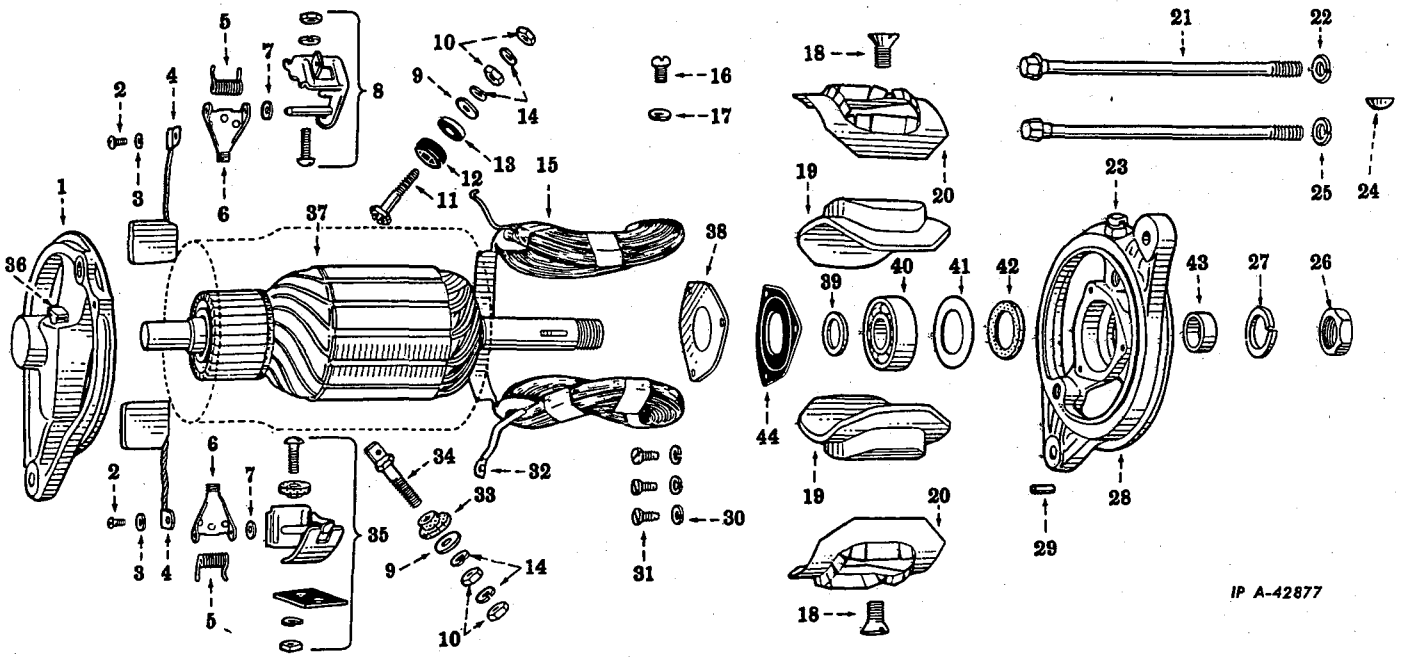

	1100342	GENERATOR ASSEMBLY (I.H. Part No. 277 384 R91)
1	1927451	FRAME ASSEMBLY (commutator end) (Composed of -
		1 BUSHING 1927446
		1 OILER 1880635
		1 PIN 809062
		1 RETAINER 1927448
		1 WASHER 1927447
		1 WICK 804080)
2	132688	Follows Reference No. 4
3	1904377	Follows Reference No. 4
4	1923295	BRUSH w/LEAD (2)
	132688	SCREW, No. 6 x 1/4" rd-hd. (2)
	1904377	WASHER, No. 6 lock (2)
5	1916324	SPRING, brush arm (2)
6	1878183	ARM, brush (2)
	1904368	WASHER, brush arm spacing (2)
7	1904368	Follows Reference No. 6
8	1922288	HOLDER, ground brush
9	1881409	WASHER, terminal stud (2)
10	121743	NUT, No. 12 terminal stud (4)
11	1921860	STUD, terminal (field)
12	1885090	BUSHING, insulating terminal stud
13	1858753	WASHER, insulating terminal stud
14	1904661	WASHER, terminal stud lock (4)
15	1927700	COIL, field (set)
16		(Not used)
17		(Not used)
18	1940326	Follows Reference No. 19
19	1914618	SHOE, pole (2)
	1940326	SCREW, pole (2)
20	1914491	INSULATOR, field coil (2)

ALWAYS give GENERATOR NUMBER when ordering PARTS

21	815018	BOLT, generator thru (2)
	120368	WASHER, 5/16" lock (2)
22	120368	Follows Reference No. 21
23	1880641	OILER (drive end)
24	124545	KEY, 1/8 x 5/8" (Woodruff)
25	120368	Follows Reference No. 21
26	1911324	NUT, shaft (drive end)
27	1888439	WASHER, lock shaft nut (drive end)
28	1871693	FRAME w/OILER, 1880641 and WICK, 823551, (drive end)
29	809593	PIN, dowel (drive end)
30	1880781	Follows Reference No. 38
31	1904370	Follows Reference No. 38
32	200382	TERMINAL (clip to brush) (2)
33	1921362	BUSHING, insulating terminal stud
34	1921369	STUD, terminal
35	1922289	HOLDER, insulating brush
36	1880635	OILER (commutator end)
37	1928952	ARMATURE
38	1911263	PLATE (drive end)
	1904370	SCREW, commutator end cover plate (3)
	1880781	WASHER, lock (3)
39	809945	WASHER, spacing (drive end) (inside)
40	907503	BEARING, ball (drive end)
41	819104	PLATE, felt washer retainer (drive end)
42	809961	WASHER, felt (drive end)
43	1858603	COLLAR, spacing (drive end) (outside)
44	1912008	GASKET (cover plate) (drive end)
	1927446	BUSHING (commutator end)
	809062	PIN, dowel (commutator end)
	1927448	RETAINER (commutator end)
	804080	WICK (commutator end)
	1927447	WASHER, felt (commutator end)
	823551	WICK (drive end)

ALWAYS give GENERATOR NUMBER when ordering PARTS

PRINTED IN UNITED STATES OF AMERICA

REF. NO.	MFR'S. NUMBER	DESCRIPTION

GENERATOR (High Output)
(Delco-Remy) (TD-91 65034 up)

1105112	GENERATOR ASSEMBLY (I.H. Part No. 277 174 R91)
1938539	ARMATURE
1878183	ARM, brush (2)
1879530	BAND, cover
900529	BEARING, ball (commutator end)
900529	BEARING, ball (drive end)
809763	BOLT, thru (2)
1906965	BRUSH (2)
1881409	BUSHING, insulating terminal (inside)
200362	CLIP, terminal to brush
1923473	COIL, LH field
1923472	COIL, RH field
1858603	COLLAR, space (outside) (drive end)
1937219	COVER (commutator end)
1937227	FAN (commutator end)
1937217	FRAME and HOLDER w/PIN, 809062, brush (commutator end)
1936333	FRAME (drive end)
1885090	INSULATOR, terminal (2)
124545	KEY, No. 8, 5/32 x 3/4" (Woodruff) (drive end)
806915	NUT, shaft
121743	NUT, terminal stud (4)
809062	PIN, dowel (commutator end and drive end) (2)
1911263	PLATE, ball bearing retainer (drive end)
1929959	RING, bearing retainer (commutator end)
141541	SCREW, brush lead attaching (2)
131238	SCREW, frame
132923	SCREW, cover band
1883864	SCREW, pole shoe (2)
1904370	SCREW, ball bearing retainer attaching plate (3)
1918004	SHOE, pole (2)
1856993	SPRING, brush (2)
1858751	STUD, terminal
1880781	WASHER, ball bearing retainer plate attaching screw lock (3)
120380	WASHER, frame lock
1857412	WASHER, brush arm space (2)
120638	WASHER, thru bolt lock (2)
1904377	WASHER, brush lead attaching lock (2)
1904661	WASHER, terminal stud lock (4)
809945	WASHER, space (outside) (commutator end)
804000	WASHER, shaft nut lock
1881409	WASHER, terminal stud (2)
1902746	WASHER, terminal stud insulating (2)

ALWAYS give GENERATOR NUMBER when ordering PARTS

-114-
ELECTRICAL SYSTEM
DIESEL ENGINE

REF. NO.	MFR'S. NUMBER	DESCRIPTION

VOLTAGE REGULATOR
(Delco-Remy) (TD-61 and TD-91)

-115-
ELECTRICAL SYSTEM
DIESEL ENGINE

REF. NO.	MFR'S. NUMBER	DESCRIPTION

VOLTAGE REGULATOR
(Delco-Remy) (TD-61 and TD-91) - Continued

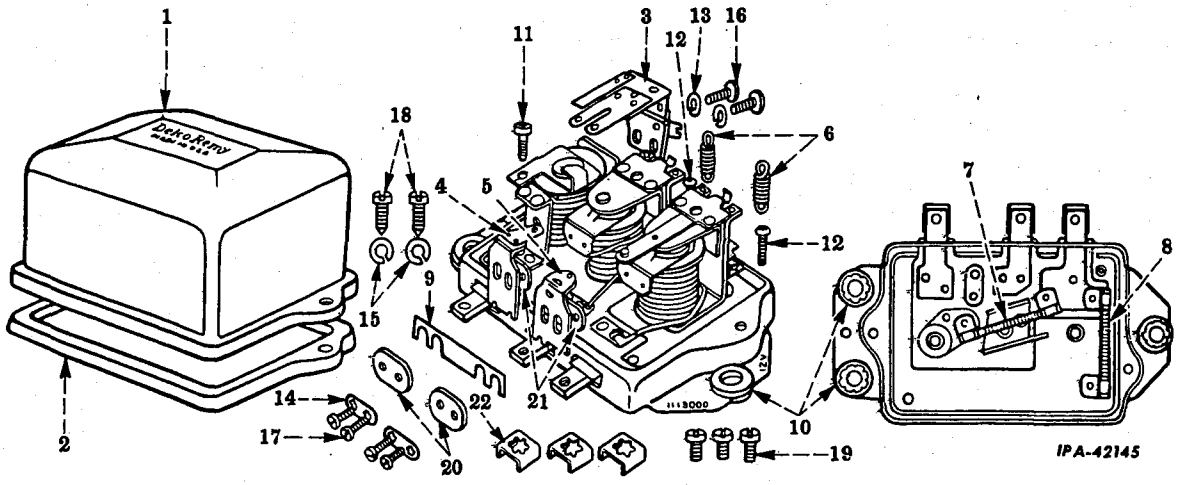

	1119152	REGULATOR ASSEMBLY, voltage (I.H. Part No. 273 299 R91) (Not used with high output generator)
	1119181	REGULATOR ASSEMBLY, voltage (I.H. Part No. 277 175 R91) (used with high output generator)
		1/4NF NUT (4)
		1/4NF x 1-1/4" slt-rd-hd. mach. SCREW (4)
		1/4" internal-tooth lock WASHER (4)
1	1931886	COVER
2	1931887	GASKET, cover
3	1878467	ARMATURE, relay
4	1933242	CONTACT and SUPPORT, voltage regulator
5	1878493	CONTACT and SUPPORT, current regulator
6	1912176	SPRING, regulator armature (2)
7	1910174	RESISTOR, "F" terminal to relay
8	1910174	RESISTOR, "F" terminal to ground
9	1878504	CONNECTOR, regulator contact attaching screw
10	1879663	GROMMET, rubber (in base) (3)
11	1912159	SCREW, relay armature adjusting
12	1922408	SCREW, regulator armature adjusting (2)
13	1904377	WASHER, relay armature attaching (2)
14	1878505	WASHER, regulator contact attaching screw lock (2)
15	1938522	WASHER, cover screw lock (2)
16	1924764	SCREW, relay armature attaching (2)
17	1878516	SCREW, regulator contact attaching (4)
18	273798	SCREW, cover (2)
19	1878502	SCREW, terminal (3)
20	1922599	INSULATOR, regulator contact attaching screw (2)
21	1878507	WASHER, regulator contact attaching screw insulating (2)
22	1878503	CLAMP, terminal (3)
	1911033	LEAD, ground
	1911028	MOUNT, shock (3 hole)
	1911034	MOUNT, shock (4 hole)
	124818	NUT, shock mount attaching (3)
	273484	SCREW, shock mount attaching (3)
	1874495	WASHER, shock mount attaching lock (3)

ALWAYS give VOLTAGE REGULATOR NUMBER when ordering PARTS

ALWAYS give VOLTAGE REGULATOR NUMBER when ordering PARTS

PRINTED IN UNITED STATES OF AMERICA

REF. NO.	MFR'S. NUMBER	DESCRIPTION

CRANKING MOTOR
(Delco-Remy) (TD-61 and TD-91)

-116-
ELECTRICAL SYSTEM
DIESEL ENGINE

REF. NO.	MFR'S. NUMBER	DESCRIPTION

CRANKING MOTOR
(Delco-Remy) (TD-61 and TD-91) - Continued

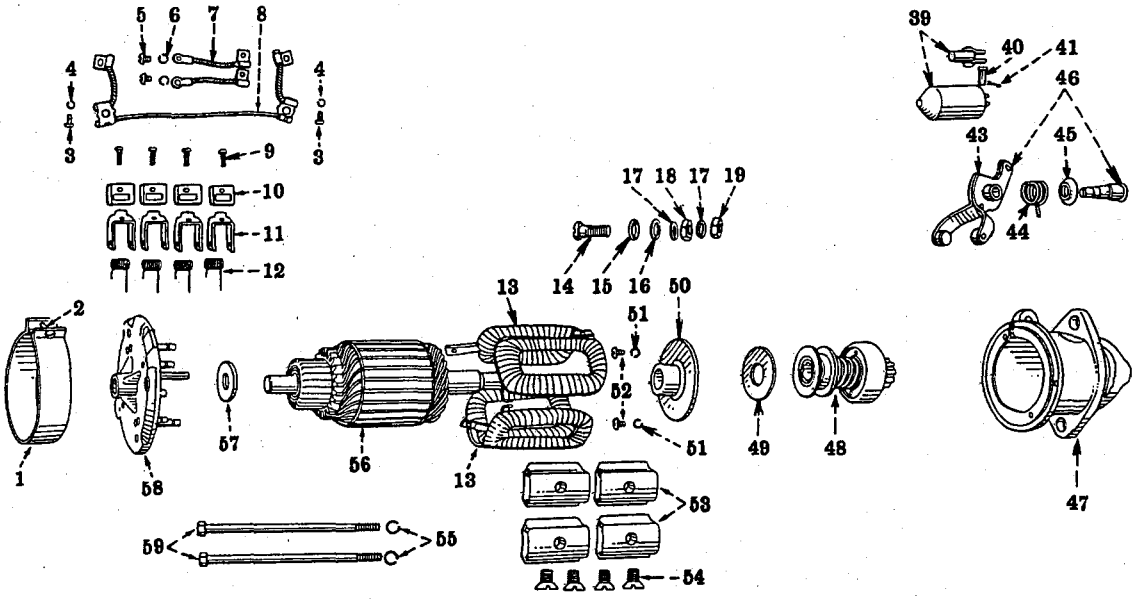

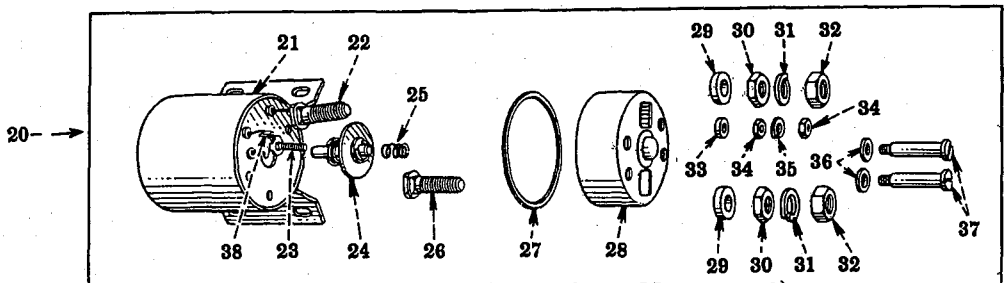

Starting Switch (Delco-Remy No. 1119778)
(Used with Cranking Motor 273 567 R91)

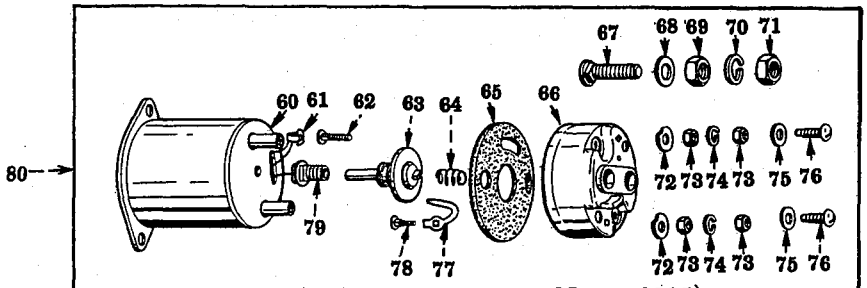

Starting Switch (Delco-Remy No. 1119935)
(Used with Cranking Motor 273 567 R92)

IP A-42739A

⊗ KEY TO UNITS

A -	273 567 R91	CRANKING MOTOR (Delco-Remy No. 1113038) (order 273 567 R92)
B -	273 567 R92	CRANKING MOTOR (Delco-Remy No. 1113052) (will work for 273 567 R91)

⊗ - Letters of these units correspond with those shown following the description of the parts in the list below and identifies the unit for which the part is used. Items without letters after the description indicates the part is used for all units.

ALWAYS give CRANKING MOTOR NUMBER when ordering PARTS

ALWAYS give CRANKING MOTOR NUMBER when ordering PARTS

PRINTED IN UNITED STATES OF AMERICA

ELECTRICAL SYSTEM
DIESEL ENGINE

REF. NO.	MFR'S. NUMBER	DESCRIPTION

CRANKING MOTOR
(Delco-Remy) (TD-61 and TD-91) - Continued

1	1880355	BAND w/SCREW, 132926, cover
2	132926	SCREW, cover band
3	132892	SCREW, brush lead to field coil attaching (2)
4	120217	WASHER, brush lead attaching screw lock (2)
5	132908	SCREW, ground lead attaching (Unit B) (2)
5	453283	SCREW, ground lead attaching (Unit A) (2)
6	453288	WASHER, brush ground lead attaching screw lock (2)
7	1931771	LEAD, brush ground (2)
8	1931777	LEAD, brush jumper
9	171734	SCREW, brush attaching (4)
10	1906958	BRUSH (4)
11	1931773	HOLDER, brush (4)
12	1855685	SPRING, brush (4 for Unit A)
12	1935316	SPRING, brush (4 for Unit B)
13	1931788	COIL, field
14	1933879	STUD, terminal
15	1857268	WASHER, terminal stud insulating
16	805790	WASHER, terminal stud
17	120381	WASHER, terminal stud lock (2)
18	805258	NUT, terminal stud
19	134566	NUT, terminal stud
20	1119778	SWITCH ASSEMBLY, solenoid starting (Unit A)

(Composed of -

1	CASE and COIL	1931813
1	CLIP	1926958
1	CONTACT and ROD	1912059
1	COVER	1931818
1	GASKET	1930629
2	NUT	120622
2	NUT	134566
2	NUT	805258
2	SCREW	132903
1	SPRING	1853342
1	STUD	1837533
1	STUD	1927344
1	STUD	1931814
2	WASHER	120381
2	WASHER	1923935
1	WASHER	1926969
2	WASHER	1927345
1	WASHER	1904615)

21	1931813	CASE and COIL (Unit A)
22	1931814	STUD, terminal (3/8 x 1-5/64") (Unit A)
23	1837533	STUD, terminal (No. 8) (Unit A)
24	1912059	CONTACT and ROD, push (Unit A)
25	1853342	SPRING, contact return (Unit A)
26	1927344	STUD, terminal (3/8 x 1-3/16") (Unit A)
27	1930629	GASKET, cover (Unit A)
28	1931818	COVER (Unit A)
29	1927345	WASHER, insulating (3/8" terminal stud) (2 for Unit A)
30	805258	NUT, 3/8" terminal stud (2 for Unit A)
31	120381	WASHER, 3/8" terminal stud lock (2 for Unit A)
32	134566	NUT (3/8" terminal stud) (2 for Unit A)
33	1926969	WASHER, insulating (No. 8 terminal stud) (Unit A)
34	120622	NUT (No. 8 terminal stud) (2 for Unit A)

ALWAYS give CRANKING MOTOR NUMBER when ordering PARTS

ELECTRICAL SYSTEM
DIESEL ENGINE

REF. NO.	MFR'S. NUMBER	DESCRIPTION

CRANKING MOTOR
(Delco-Remy) (TD-61 and TD-91) - Continued

35	1904615	WASHER, lock (No. 8 terminal stud) (Unit A)
36	1923935	WASHER, cover attaching screw (2 for Unit A)
37	132903	SCREW, cover attaching (2 for Unit A)
38	1926958	CLIP, terminal (No. 8 terminal stud) (Unit A)
39	1932079	PLUNGER and LINK
40	1853305	PIN, shift lever
41	112726	PIN, shift lever cotter
43	1931776	LEVER, shift
44	1922876	SPRING, shift lever
45	1915897	RING, LH shift lever shaft retainer
45	1915668	RING, RH shift lever shaft retainer
46	1931807	LEVER and SHAFT
47	1934445	HOUSING w/BUSHING, 826462, PLUG, 125947 and WICK, 1909560, drive
48	1940134	DRIVE ASSEMBLY, motor (clutch type) (will work for 1932890)

(Composed of -

1	BUSHING (oilless)	37535
1	COLLAR	1904443
1	LOCKWIRE	1904436
1	SPRING	1932354)

49	821453	WASHER, brake (between center bearing and motor drive)
50	1931808	PLATE w/BUSHING, 820148, center bearing
51	1880781	WASHER, center bearing attaching screw lock (2)
52	132892	SCREW, center bearing attaching (2)
53	1931784	SHOE, pole (4)
54	1843646	SCREW, pole shoe (4)
55	120214	WASHER, thru bolt lock (2)
56	1935321	ARMATURE
57	833602	WASHER, space (commutator end)
58	1935325	FRAME ASSEMBLY, end and PIN

(Composed of -

1	BUSHING	1872678
1	CUP	1935256
1	PIN	809062
2	PIN	812015
2	PIN	812016
2	PIN	817313
2	PIN	817314
1	PLUG	125947
1	WASHER	1935255
1	WICK	1909560)

59	1931812	BOLT, thru (2)
60	1931813	CASE and COIL (Unit B)
61	1926958	CLIP, terminal (Unit B)
62	1837533	STUD, terminal switch (Unit B)
63	1912059	CONTACT and ROD (Unit B)
64	1853342	SPRING, contact return (Unit A)
65	1930629	INSULATOR, cover (Unit B)
66	1938151	COVER (Unit B)

ALWAYS give CRANKING MOTOR NUMBER when ordering PARTS

REF. NO.	MFR'S. NUMBER	DESCRIPTION

CRANKING MOTOR
(Delco-Remy) (TD-61 and TD-91) - Continued

67	1927344	STUD, battery terminal (Unit B)
68	1927345	WASHER, insulating terminal (23/32 x 19/32") (Unit B)
69	805258	NUT, 3/8" terminal (Unit B)
70	120381	WASHER, 3/8" terminal lock (Unit B)
71	134566	NUT, 3/8" terminal (Unit B)
72	1926969	WASHER, insulating (11/64 x 7/16") (2 for Unit B)
73	120622	NUT, No. 8 terminal (4 for Unit B)
74	1904615	WASHER, No. 8 lock (2 for Unit B)
75	1923935	WASHER, cover attaching screw (2 for Unit B)
76	132903	SCREW, attaching cover (2 for Unit B)
77	1923932	BLADE, contact (Unit B)
78	1926959	STUD, resistor terminal (Unit B)
79	1931814	STUD, motor terminal (Unit B)
80	1119935	SWITCH ASSEMBLY, solenoid starting (Unit B)

(Composed of -

1	BLADE	1923932
1	CASE and COIL	1931813
1	CLIP	1926958
1	CONTACT	1912059
1	COVER	1938151
1	INSULATOR	1930629
1	NUT	805258
1	NUT	134566
4	NUT	120622
2	SCREW	132903
1	SPRING	1853342
1	STUD	1931814
1	STUD	1927344
1	STUD	1837533
1	STUD	1926959
1	WASHER	120381
2	WASHER	1923935
2	WASHER	1926969
2	WASHER	1904615
1	WASHER	1927345)

1872678	BUSHING (commutator end)
820148	BUSHING, center bearing
826462	BUSHING (drive end)
37535	BUSHING (oil less)
1847199	CABLE, solenoid starting switch (4)
1904443	COLLAR (motor drive) (Unit B)
1928021	COLLAR, pinion stop
193526	CUP, felt retainer (Unit A)
1931783	INSULATOR, terminal stud
1913534	INSULATION, field coil (2)
1927033	LINK, shift lever spacer
1904436	LOCKWIRE
817313	PIN, brush hinge (2)
817314	PIN, brush holder stop (2)
812016	PIN, brush holder hinge and insulator (2)
812015	PIN, brush holder stop and insulator (2)
809062	PIN, dowel (commutator end and drive end) (2 for Unit A)
125947	PLUG, pipe (2)

ALWAYS give CRANKING MOTOR NUMBER when ordering PARTS

-118-
ELECTRICAL SYSTEM
DIESEL ENGINE

REF. NO.	MFR'S. NUMBER	DESCRIPTION

CRANKING MOTOR
(Delco-Remy) (TD-61 and TD-91) - Continued

1928022	RING, pinion stop retainer
1916529	SCREW, solenoid starting switch attaching (4)
132119	SCREW, link attaching
1932354	SPRING (motor drive)
1935255	WASHER, felt retainer (Unit A)
820155	WASHER, space (between center bearing and armature)
131183	WASHER, attaching link lock
805790	WASHER, terminal stud
1909560	WICK (commutator end and drive end) (2)
	SCREW, 3/8 x 1-3/8" hex-hd. cap (used to mount cranking motor) (3)
	WASHER, 3/8" medium lock (used to mount cranking motor) (3)

ALWAYS give CRANKING MOTOR NUMBER when ordering PARTS

REF. NO.	PART NUMBER	DESCRIPTION

CRANKING MOTOR AND FUEL FILTER DRIP PAN
(TD-61 and TD-91)

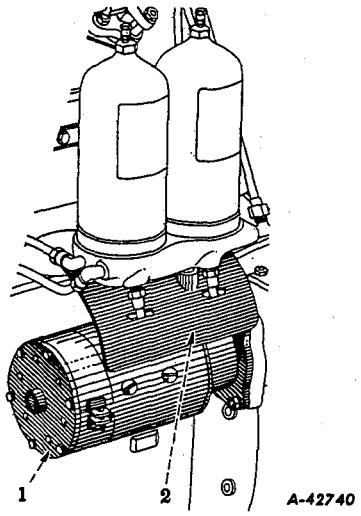

1	273 567 R92	MOTOR, cranking (Delco-Remy 1113052) (for components see list of parts under details of "Cranking Motor")
		3/8 x 1-3/8" hex-hd. cap SCREW (3)
		3/8" lock WASHER (3)
2	65 069 D	PAN, fuel filter drip (for units equipped with IH fuel injection pump)
		5/16 x 1/2" hex-hd. cap SCREW (2)
		5/16" lock WASHER (2)
		11/32 x 11/16" x No. 16 ga. WASHER (2)

REF. NO.	MFR'S. NUMBER	DESCRIPTION

STARTING SWITCH
(Delco-Remy) (TD-61 and TD-91)

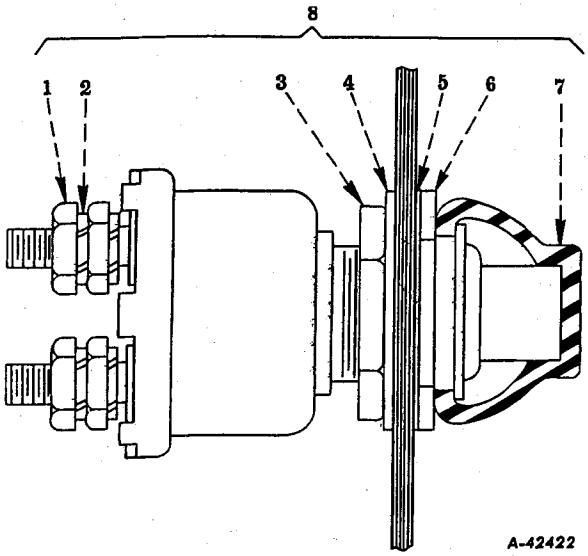

1	120614	NUT, terminal (2)
2	120217	WASHER, terminal nut lock (2)
3	1855936	NUT, inner mounting
4	138557	WASHER, mounting nut lock
5	1913828	WASHER, plain mounting nut
6	1903896	NUT, outer mounting
7	1914549	BOOT
8	1996080	SWITCH ASSEMBLY, starting (I.H. No. 271 179 R1)

-119-
ELECTRICAL SYSTEM
DIESEL ENGINE

REF. NO.	MFR'S. NUMBER	DESCRIPTION

LIGHTING SWITCH
(Delco-Remy) (TD-61 and TD-91)

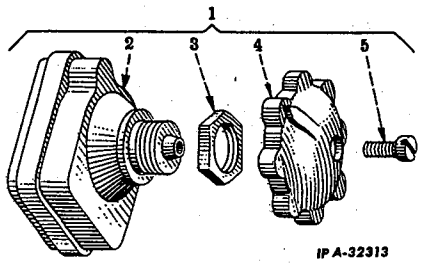

1	1994053	SWITCH ASSEMBLY, lighting (I.H. Part No. 275 282 R91) 11/16" internal-tooth lock WASHER No. 8 cd-pltd. lock WASHER
2		SWITCH, lighting (not furnished separately) (order 275 282 R91)
3	1882012	NUT, lighting switch mounting
4	1882013	KNOB, lighting switch
5	1864099	SCREW, lighting switch knob attaching
	1882994	SCREW, No. 8 x 3/8" terminal (6)
	1873844	WASHER, terminal screw lock (7)

ALWAYS give SWITCH NUMBER when ordering PARTS
PRINTED IN UNITED STATES OF AMERICA

REF. NO.	PART NUMBER	DESCRIPTION

HEADLIGHTS AND REAR LIGHT
(Guide Lamp) (TD-61 and TD-91)

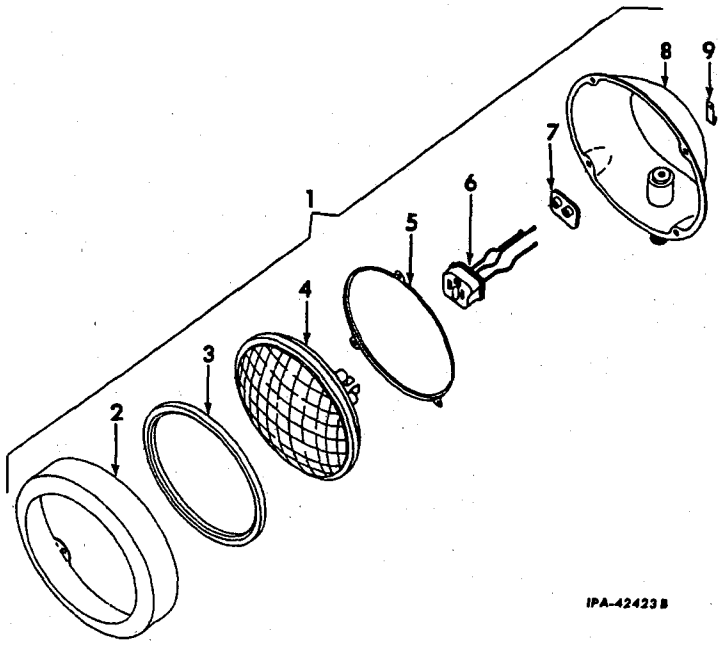

REF. NO.	PART NUMBER	DESCRIPTION
1	273 286 R91	HEADLIGHT and REAR LIGHT ASSEMBLY (optional with 278 093 R91) (898348) (3) (Composed of - 1 CLIP 275 577 R1; 1 GASKET 272 082 R1; 1 PACKAGE 275 574 R91; 1 PLATE 272 064 R91; 1 PLATE 275 579 R1; 1 UNIT 272 061 R91; 1 WIRING and CONNECTOR 275 576 R91) 5/8" NUT (3)
2		DOOR (order 275 574 R91) (3)
3	272 082 R1	GASKET, door (5939056) (3)

-120-
ELECTRICAL SYSTEM
DIESEL ENGINE

REF. NO.	PART NUMBER	DESCRIPTION

HEADLIGHTS AND REAR LIGHT
(Guide Lamp) (TD-61 and TD-91) - Continued

REF. NO.	PART NUMBER	DESCRIPTION
4	272 061 R91	UNIT, sealed (453089) (3)
5	275 579 R1	PLATE, retainer unit (5944310) (3)
6	275 576 R91	WIRING and CONNECTOR (912995) (3)
7	272 064 R91	PLATE, terminal (5935457) (3)
8		BODY (order 273 286 R91) (3)
9	275 577 R1	CLIP (913193) (3)
	275 574 R91	PACKAGE, door field service (consists of DOOR, three SCREW, 272 084 R1 and four SCREW, 272 085 R1) (5947987) (3)
	272 084 R1	SCREW (5944311) (9)
	272 085 R1	SCREW (5944312) (12) WASHER, No. 10 medium lock (21)

HEADLIGHTS AND REAR LIGHT
(Hobbs) (TD-61 and TD-91)

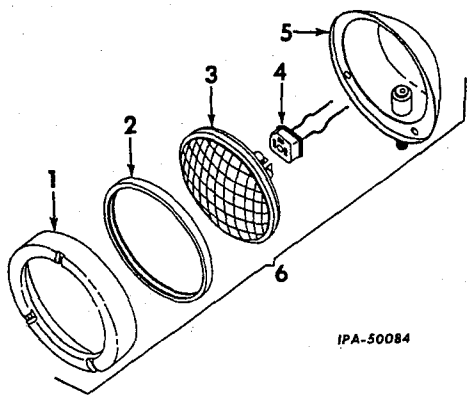

HEADLIGHTS AND REAR LIGHT
(Hobbs) (TD-61 and TD-91) - Continued

REF. NO.	PART NUMBER	DESCRIPTION
1	278 091 R91	DOOR (3473) (3)
2	278 092 R91	GASKET (3471) (3)
3	272 061 R91	UNIT, sealed (3472) (3)
4	278 090 R1	WIRING and CONNECTOR (3470) (3)
5		BODY (order 278 093 R91)
6	278 093 R91	HEADLIGHT and REAR LIGHT ASSEMBLY (optional with 273 286 R91) (MI-1332) (3) (Composed of - §1 BODY; 1 DOOR 278 091 R91; 1 GASKET 278 092 R1; 1 UNIT 272 061 R91; 1 WIRING and CONNECTOR 278 090 R1)
		NUT, 5/8NF hex. (3)
		NUT, 5/8NF hex. (3474) (3)

§ - Not Furnished Separately

PRINTED IN UNITED STATES OF AMERICA

REF. NO.	PART NUMBER	DESCRIPTION

BRACKETS AND SWIVEL FOR HEADLIGHT AND REAR LIGHT (TD-61 and TD-91)

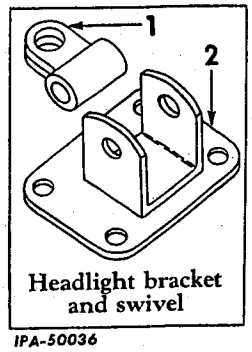

IPA-50036

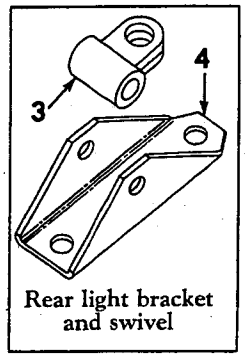

1	281 924 R1	SWIVEL, headlight (2) 1/2NF NUT (2) 1/2NF x 2-1/2" hex-hd. cap SCREW (2) 1/2" lock WASHER (2)
2	282 081 R91	BRACKET, headlight mounting (not used with headlight brush guard attachment) (2) 7/16 x 7/8" hex-hd. cap SCREW (8) 7/16" lock WASHER (8)
3	281 924 R1	SWIVEL, rear light 1/2NF NUT 1/2NF x 2-1/2" hex-hd. cap SCREW 1/2" lock WASHER
4	281 923 R1	BRACKET, rear light 1/2NF NUT (2) 1/2NF x 1" hex-hd. cap SCREW (2) 1/2" lock WASHER (2)

TAIL LIGHT AND GUARD (Guide Lamp)
(TD-61 40272 up and TD-91 65034 up)

-121-
ELECTRICAL SYSTEM
DIESEL ENGINE

REF. NO.	PART NUMBER	DESCRIPTION

AUXILIARY REAR LIGHT
(TD-61 40272 up and TD-91 65034 up)

281 923 R1	BRACKET, rear light (See NOTE 1) 1/2NF NUT (2) 1/2NF x 2-1/2" hex-hd. cap SCREW (2) 1/2" lock WASHER (2)
266 767 R91	CABLE, junction block to rear light (See NOTE 2)
362 120 R1	CLIP, cable (rubber covered) (See NOTE 2) 3/8NF NUT
112 734	GROMMET, cable (on side sheet) (See NOTE 2)
273 286 R91	LIGHT ASSEMBLY, rear (Guide Lamp) (optional with 278 093 R91) (for components see list of parts under details of "Headlights or Rear Light")
278 093 R91	LIGHT ASSEMBLY, rear (Hobbs) (optional with 273 286 R91) (for components see list of parts under details of "Headlights or Rear Lights")
281 924 R1	SWIVEL, rear light (See NOTE 1) 1/2NF NUT 1/2NF x 2-1/2" hex-hd. cap SCREW 1/2" lock WASHER

NOTE 1 - Illustrated with "Brackets and Swivel."

NOTE 2 - Illustrated with "Electric Starting and Lighting" TD-91 65034 up and TD-61 40272 up.

TAIL LIGHT AND GUARD (Guide Lamp)
(TD-61 40272 up and TD-91 65034 up) - Continued

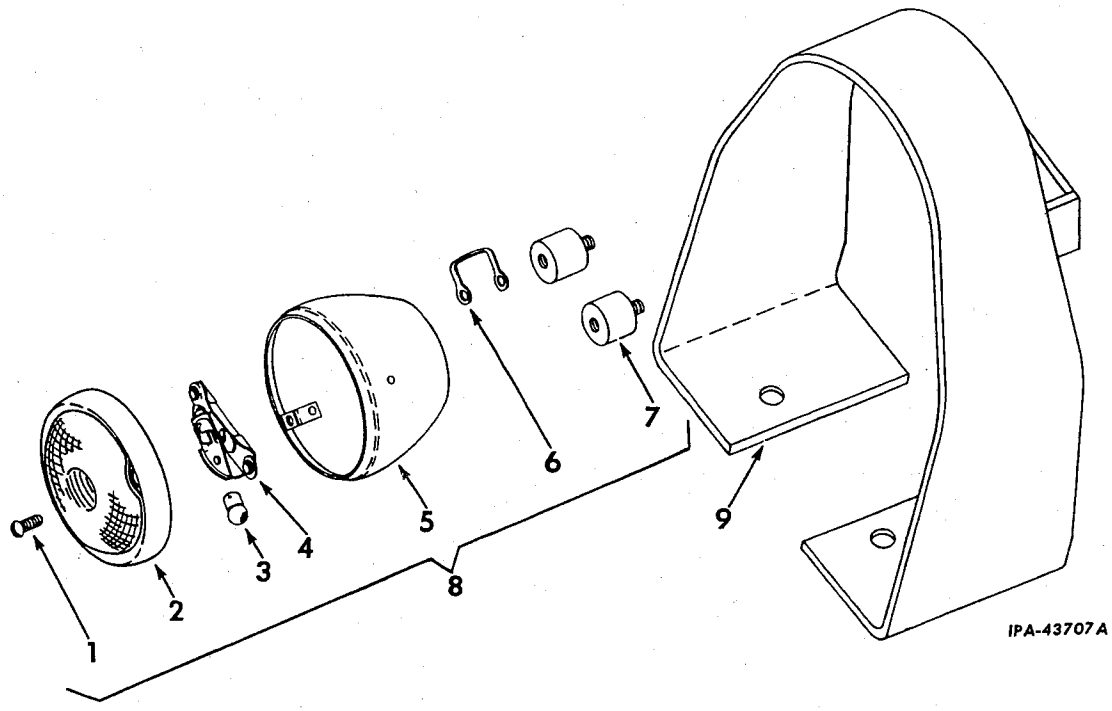

IPA-43707A

REF. NO.	PART NUMBER	DESCRIPTION

TAIL LIGHT AND GUARD (Guide Lamp)
(TD-61 40272 up and TD-91 65034 up) - Continued

1	53 526 D	SCREW, door (912048) (2)
2	18 370 DX	DOOR (914458)
3	142 450	BULB (4 Cp. 12 volt)
4	277 417 R1	SOCKET and PLATE (914054)
5		BODY (order 277 173 R91)
6	277 418 R1	TERMINAL, ground (5942271)
7	277 419 R91	MOUNTING, resilient (914053) (2) 1/4NF cd-pltd. NUT (2) 1/4" cd-pltd. internal-tooth lock WASHER (5)
8	277 173 R91	TAIL ASSEMBLY, light (898633) (Composed of - 1 BULB 142 450 1 DOOR 18 370 DX 1 MOUNTING 277 419 R91 2 NUT 18 369 D 2 SCREW 53 526 D 1 SOCKET and PLATE 277 417 R1 1 TERMINAL 277 418 R1)

DASH LIGHT
(Guide Lamp)

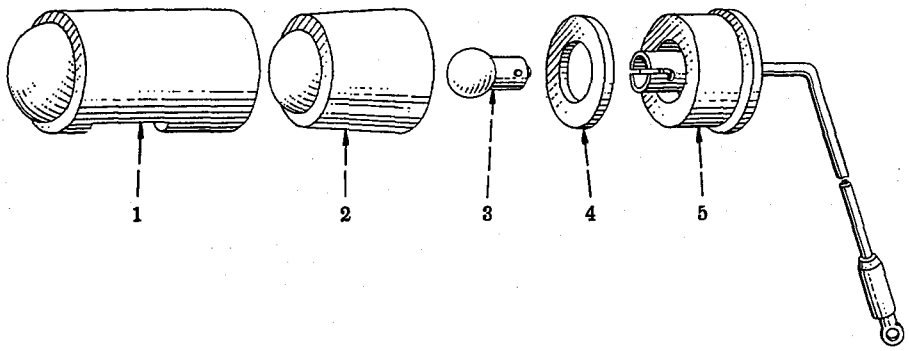

IPA-40734

	271 077 R91	LIGHT ASSEMBLY, dash (897787) (See NOTE)
1	271 588 R1	COVER (5946284)
2	89 884 R1	LENS, outlook glass (922042)
3	193 125	BULB (6 Cp. 12 volt) (631)
4	89 883 R1	GASKET (923079)
5	271 587 R91	SOCKET and WIRING (5946285)
	273 406 R1	GROMMET, dash lamp mounting (2)
	89 886 R91	SCREW (923088)(2)
	271 080 R1	SCREW, dash lamp mounting (3) No. 12 internal-tooth lock WASHER (2)
	273 405 R1	WASHER, dash lamp mounting (2)

NOTE - Also listed in Electrical System under "Electrical Starting and Lighting".

-122-
ELECTRICAL SYSTEM
DIESEL ENGINE

REF. NO.	PART NUMBER	DESCRIPTION

TAIL LIGHT AND GUARD (Guide Lamp)
(TD-61 40272 up and TD-91 65034 up) - Continued

9	277 461 R11	GUARD, rear light and tail light 1/2" NUT (2) 1/2 x 1-1/4" hex-hd. cap SCREW (2) 1/2" lock WASHER (2)
	277 460 R91	CABLE, lighting switch to junction block (†)
	43 041 DA	CABLE, junction block to tail light (†) No. 8 x 1/4" slt-rd-hd. mach. SCREW No. 8 internal-tooth lock WASHER
	18 369 D	NUT (911597) (2)

(†) - Illustrated with "Electric Starting and Lighting". (TD-61 40272 up and TD-91 65034 up)

DASH LIGHT
(Guide Lamp) - Continued

ELECTRICAL SYSTEM
DIESEL ENGINE

REF. NO.	PART NUMBER	DESCRIPTION

BATTERY SUPPORT
(TD-61 and TD-91)

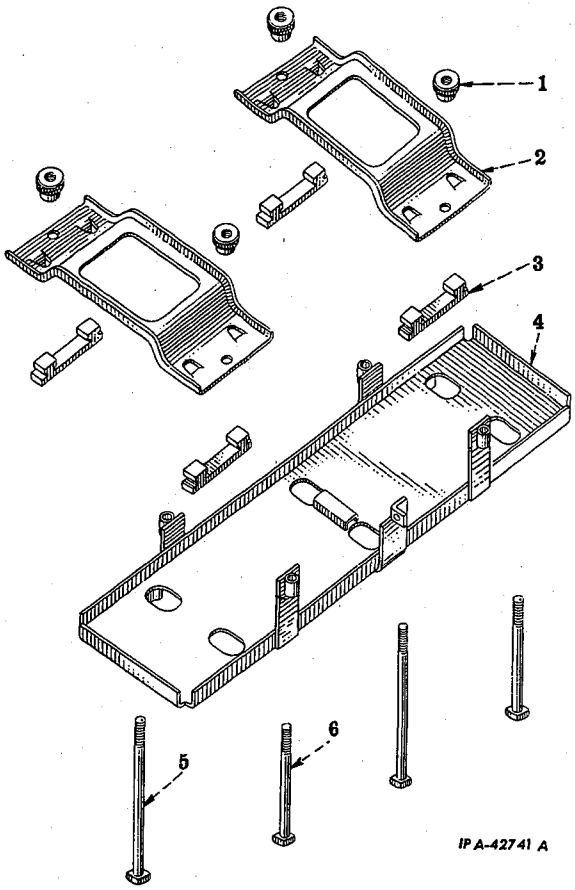

1		NUT, 3/8" battery hold-down bolt wing (4) 1/16 x 5/8" cotter PIN (4) 3/8" lock WASHER (4)
2	280 703 R1	CLAMP, battery hold-down (2)
3	280 704 R1	BUMPER, battery hold-down (4)
4	266 844 R22	SUPPORT, battery (order 276 979 R91) (together with 276 975 R1 and 276 976 R1 will work for 266 844 R22) (TD-61 38951 to 39188 and TD-91 60301 to 61898)
4	276 979 R91	SUPPORT, battery (TD-61 39189 up and TD-91 61899 up) 1/2 x 1-1/4" hex-hd. cap SCREW (6) 1/2" lock WASHER (6) 17/32 x 1-1/16" x No. 13 ga. WASHER (6)
5	267 917 R1	BOLT, battery hold-down (front and rear) (long) (TD-91 60301 to 61898 and TD-61 38951 to 39188) (4)
5	267 917 R1	BOLT, battery hold-down (front) (long) (TD-91 61899 up and TD-61 39189 up) (2)
6	276 976 R1	BOLT, battery hold-down (rear) (short) (TD-91 61899 up and TD-61 39189 up) (2)

ELECTRICAL SYSTEM
DIESEL ENGINE

REF. NO.	PART NUMBER	DESCRIPTION

BATTERY SUPPORT
(TD-61 and TD-91) - Continued

	275 241 R1	SPACER, battery support TD-91 (2)
	277 723 R1	SPACER, battery support TD-61 (3)
	276 975 R1	ROD, seat hold-down (also listed with "Seat and Platform" in this Catalog.)

HEADLIGHT BRUSH GUARD
(TD-61 and TD-91)

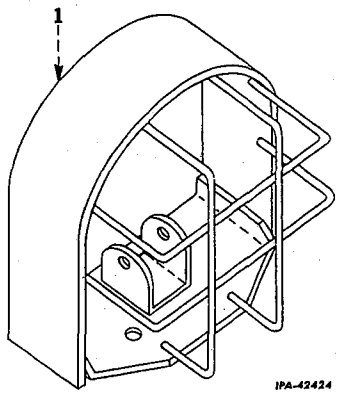

	274 570 R91	ATTACHMENT, headlight brush guard Factory Application - Order on Machine Order Form Field Application - Order through Regular Service Parts Channels
1	274 571 R91	GUARD, headlight brush (2) 7/16 x 7/8" hex-hd. cap SCREW (8) 7/16" lock WASHER (8)

REAR LIGHT BRUSH GUARD
(TD-61 and TD-91)

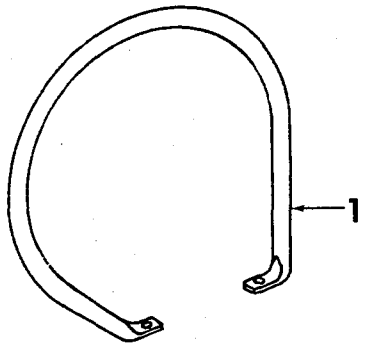

IPA-43704

1	281 268 R2	GUARD, rear light brush 1/2NF NUT (2) 1/2NF x 1-3/4" hex-hd. cap SCREW (2) 1/2" lock WASHER (2)

REF. NO.	PART NUMBER	DESCRIPTION

CIGARETTE LIGHTER
(TD-61 and TD-91)

-124-
ELECTRICAL SYSTEM
DIESEL ENGINE

REF. NO.	PART NUMBER	DESCRIPTION

CIGARETTE LIGHTER
(TD-61 and TD-91) - Continued

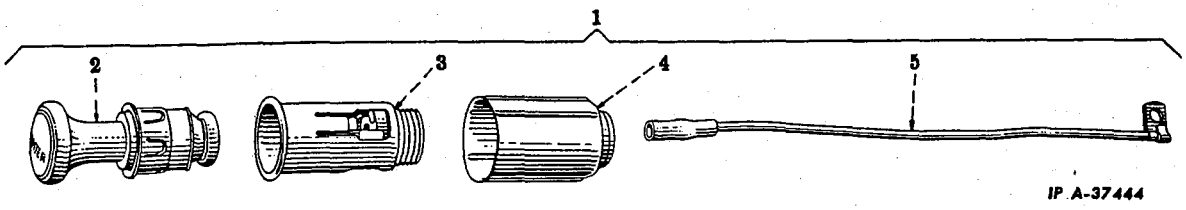

REF. NO.	PART NUMBER	DESCRIPTION
	278 730 R91	ATTACHMENT, cigarette lighter (TD-61 and TD-91) Factory Application - Order on Machine Order Form. Field Application - Order through Regular Service Parts Channels
1	362 000 R91	LIGHTER ASSEMBLY, cigarette (12 volt) (Composed of - 1 BASE 363 423 R91 §1 CABLE 1 SHELL 363 419 R1 1 UNIT 363 422 R91)
2	363 422 R91	UNIT, pop-out
3	363 423 R91	BASE, switch
4	363 419 R1	SHELL, clamping
5		CABLE, cigarette lighter to "Acc" terminal (Not furnished separately - order 362 000 R91)

§ - Not Furnished separately

PRINTED IN UNITED STATES OF AMERICA

ELECTRIC STARTING AND LIGHTING
(Battery Ignition) (TD-61 38951 to 40271)

-125-
ELECTRICAL SYSTEM
DIESEL ENGINE

ELECTRIC STARTING AND LIGHTING
(Battery Ignition) (TD-61 38951 to 40271) - Continued

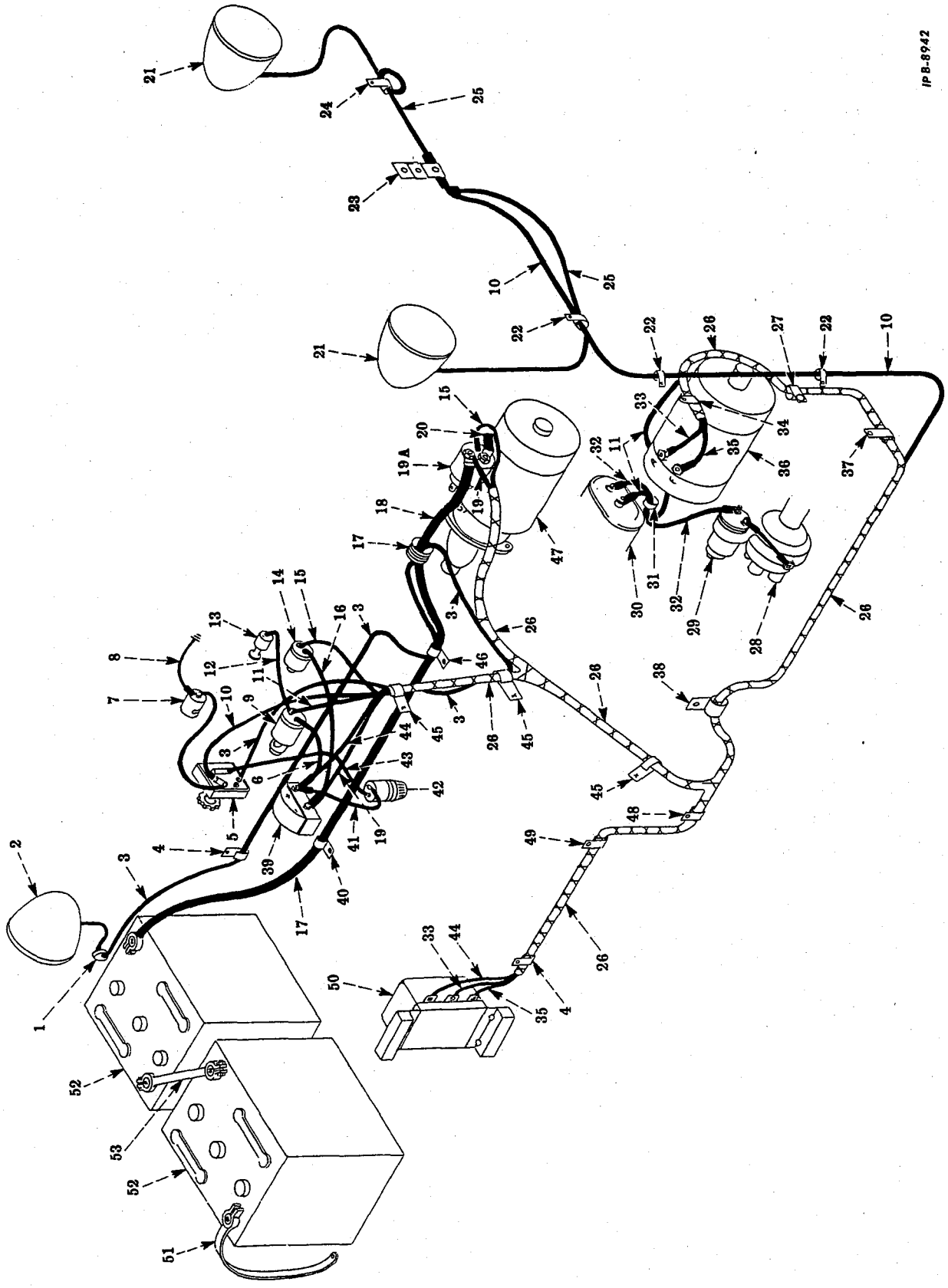

PRINTED IN UNITED STATES OF AMERICA

REF. NO.	PART NUMBER	DESCRIPTION

ELECTRIC STARTING AND LIGHTING
(Battery Ignition) (TD-61 38951 to 40271) - Continued

1	112 734	GROMMET, cable harness (on sheet side)
2	273 286 R91	REAR LIGHT ASSEMBLY (for components see list of parts under details of "Headlights and Rear Light") (Guide Lamp) (optional with 278 093 R91)
2	278 093 R91	REAR LIGHT ASSEMBLY (for components see list of parts under details of "Headlights and Rear Light") (Hobbs Lamp) (optional with 273 286 R91)
3	275 383 R91	CABLE, lighting switch to rear light
4	263 514 R91	CLIP, cable (for 3/8" bolt) (rear platform support) (2)
5	275 282 R91	SWITCH, lighting (Delco-Remy No. 1994053) (for components see list of parts under details of "Lighting Switch")
6		CABLE, ignition switch to ammeter (orange) (order 275 381 R91)
7	271 077 R91	LIGHT, dash (for components see list of parts under details of "Dash Light")
8	274 305 R91	CABLE, dash light ground to heat indicator mounting screw ground
9	62 801 DC	SWITCH, ignition (for components see list of parts under details of "Ignition Switch")
10		CABLE, lighting switch to headlight junction block (black) (order 275 381 R91)
11		CABLE, ignition switch to manifold switch (brown) (order 275 381 R91)
12		CABLE, cigarette lighter to ignition switch (furnished with Cigarette Lighter) (part of ATTACHMENT, 278 730 R91)
13	362 000 R91	LIGHTER ASSEMBLY, cigarette (part of ATTACHMENT, 278 730 R91) (for components see list of parts under details of "Cigarette Lighter")
14	271 179 R91	SWITCH, starting (Delco-Remy No. 1996080) (for components see list of parts under details of "Starting Switch")
15		CABLE, starting switch to solenoid (gray) (order 275 381 R91)
16		CABLE, ammeter to starting switch (green) (order 275 381 R91)
17	112 745	GROMMET, cable harness (on dash)
18	275 174 R91	CABLE, battery to solenoid
19		CABLE, charge indicator to solenoid (red) (order 275 381 R91)
19A		SOLENOID (for components see list of parts under details of "Cranking Motor")
20		CABLE, solenoid to cranking motor (furnished with cranking motor)
21	273 286 R91	HEADLIGHT ASSEMBLY (for components see list of parts under details of "Headlights and Rear Light") (Guide Lamp) (optional with 278 093 R91) (2)
21	278 093 R91	HEADLIGHT ASSEMBLY (for components see list of parts under details of "Headlights and Rear Light") (Hobbs Lamp) (optional with 273 286 R91) (2)
22	263 515 R91	CLIP, cable (for 5/16" bolt) (on fan shroud)
23	275 278 R91	BLOCK w/BLOCK, 42 915 D and BRACKET 275 279 R1, junction and bracket No. 10 NUT No. 10 x 1-1/2" slt-rd-hd. SCREW No. 10 lock WASHER
24	263 514 R91	CLIP, cable (for 3/8" bolt) (lower bolt of gas tank)
25	57 062 DA	CABLE, junction block to headlight cables (2)
26	275 381 R91	HARNESS, cable
27	263 514 R91	CLIP, cable (for 3/8" bolt) (upper rear distributor bracket bolt)
28	353 892 R91	DISTRIBUTOR ASSEMBLY (for components see list of parts under details of "Distributor") (will work for 356 892 R91)

-126-
ELECTRICAL SYSTEM
DIESEL ENGINE

REF. NO.	PART NUMBER	DESCRIPTION

ELECTRIC STARTING AND LIGHTING
(Battery Ignition) (TD-61 38951 to 40271) - Continued

29	365 783 R91	COIL, ignition (will work for 353 875 R91)
30	363 311 R12	COVER ASSEMBLY, intake manifold (for components see list of parts under details of "Intake Manifold and Exhaust Manifold")
31	263 308 R91	CLIP, cable (for 1/2" bolt) (intake manifold front) 7/16 x 7/8 x 1/16" WASHER
32	266 768 R91	CABLE, coil to manifold switch
33		CABLE, "A" terminal on generator to generator on regulator (yellow) (order 275 381 R91)
34	264 164 R91	CLIP, cable (for 3/8" bolt) (mount on generator brace bolt)
35		CABLE, "F" on generator to "F" on regulator (blue) (order 275 381 R91)
36	275 697 R91	GENERATOR (Delco-Remy No. 1105109) (for components see list of parts under details of "Generator") (standard)
36	277 384 R91	GENERATOR, high output (for components see list of parts under details of "Generator (high output)"
37	263 514 R91	CLIP, cable (for 3/8" bolt) (lower outside distributor brace bolt)
38	263 514 R91	CLIP, cable (for 3/8" bolt) (oil filler base bolt)
39	269 467 R92	AMMETER (for components see list of parts under details of "Instrument Panel")
40	267 787 R91	CLIP, cable (for 7/16" bolt) (left center transmission housing)
41		CABLE, ammeter to fuse (furnished with fuse HOUSING, 275 276 R91)
42	275 276 R91	HOUSING, fuse
43		CABLE, lighting switch to fuse (furnished with fuse HOUSING, 275 276 R91)
44		CABLE, ammeter to battery on regulator (pink) (order 275 381 R91)
45	271 513 R91	CLIP, cable (mounted on dash)
46	267 788 R91	CLIP, cable (for 3/8" bolt) (rear left clutch housing cover bolt)
47	273 567 R91	MOTOR, cranking (Delco-Remy No. 1113038) (for components see list of parts under details of "Cranking Motor") 3/8 x 1-3/8" hex-hd. cap SCREW (3) 3/8" lock WASHER (3)
48	275 281 R91	CLIP, cable (for 3/8" bolt) (front center fender bolt)
49	263 514 R91	CLIP, cable (for 3/8" bolt) (front bolt to platform support)
50	273 299 R91	REGULATOR, voltage (standard) (Delco-Remy No. 1119152) (for components see list of parts under details of "Voltage Regulator")
50	277 175 R91	REGULATOR, voltage (high output) (for components see list of parts under details of "Voltage Regulator")
51	266 855 R91	CABLE, battery to ground
52	266 850 R92	BATTERY, wet charged (Auto-Lite) (optional with 269 453 R91) (2)
52	269 453 R91	BATTERY, wet charged (Globe-Union) (optional with 266 850 R92) (2)
52	277 374 R91	BATTERY, dry charged (Auto-Lite) (2)
53	266 854 R91	CABLE, battery to battery
	267 787 R91	CLIP, cable (for 7/16" bolt) (mounted on left hand fender)
	42 915	BLOCK, head light junction NUT, hex., No. 10 SCREW, No. 10 x 1/2" slt-rd-hd. WASHER, No. 10 medium lock
	356 062 R91	BOLT, battery terminal assembly (X)
	275 279 R1	BRACKET, headlight junction block
	106 653	FUSE (20 amp)

X - As Required

ELECTRIC STARTING AND LIGHTING
(Battery Ignition) (TD-91 60301 to 65033)

-127-
ELECTRICAL SYSTEM
DIESEL ENGINE

ELECTRIC STARTING AND LIGHTING
(Battery Ignition) (TD-91 60301 to 65033) - Continued

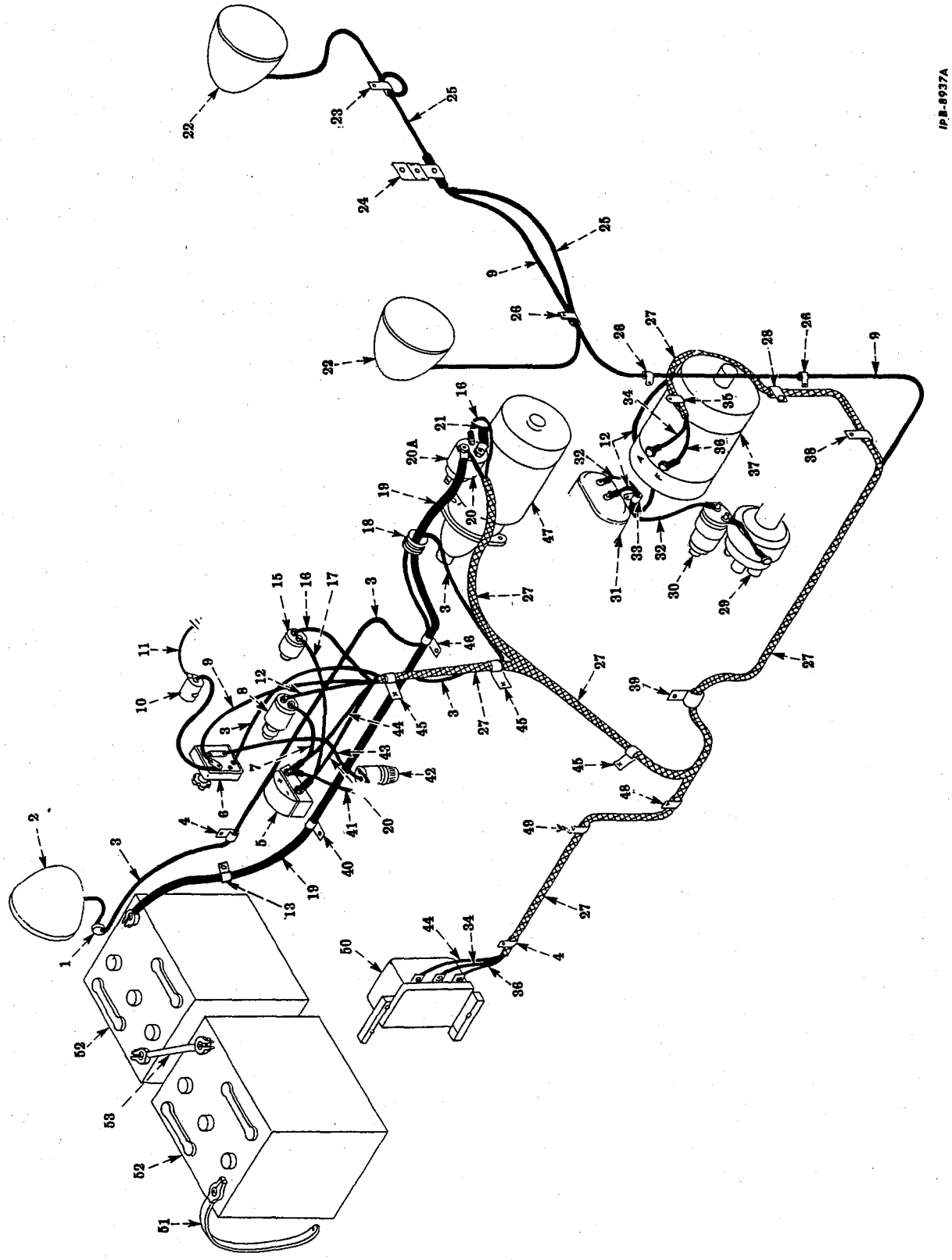

PRINTED IN UNITED STATES OF AMERICA

ELECTRICAL SYSTEM
DIESEL ENGINE

REF. NO.	PART NUMBER	DESCRIPTION

ELECTRIC STARTING AND LIGHTING
(Battery Ignition) (TD-91 60301 to 65033) - Continued

1	112 734	GROMMET, cable harness (on seat side sheet)
2	273 286 R91	REAR LIGHT ASSEMBLY (for components see list of parts under details of "Headlights and Rear Light") (optional with 278 093 R91)
2	278 093 R91	REAR LIGHT ASSEMBLY (for components see list of parts under details of "Headlights and Rear Light") (optional with 273 286 R91)
3	275 280 R91	CABLE, lighting switch to rear light
4	263 514 R92	CLIP, cable (for 3/8" bolt) (rear bolt to platform support) (2)
5	269 467 R92	INDICATOR, charge
6	275 282 R91	SWITCH, lighting (for components see list of parts under details of "Lighting Switch")
7		CABLE, ignition switch to charge indicator cable (orange) (order 275 277 R91)
8	62 801 DC	SWITCH, ignition (for components see list of parts under details of "Ignition Switch")
9		CABLE, lighting switch to headlight junction block (black) (order 275 277 R91)
10	271 077 R91	LIGHT, dash (for components see list of parts under details of "Dash Light")
11	274 305 R91	CABLE, ground to heat indicator mounting screw dash light ground
12		CABLE, ignition switch to manifold switch (brown) (order 275 277 R91)
13	267 787 R91	CLIP, cable (for 7/16" bolt) (left fender mount)
15	271 179 R1	SWITCH, starting (for components see list of parts under details of "Starting Switch")
16		CABLE, starting switch to solenoid (gray) (order 275 277 R91)
17		CABLE, charge indicator to starting switch (green) (order 275 277 R91)
18	112 745	GROMMET, cable harness (on dash)
19	275 174 R91	CABLE, battery to solenoid
20		CABLE, charge indicator to solenoid (red) (order 275 277 R91)
20A		SOLENOID, cranking motor (for components see list of parts under details of "Cranking Motor")
21		CABLE, solenoid to cranking motor (furnished with cranking motor)
22	273 286 R91	HEADLIGHT ASSEMBLY (Guide Lamp) (for components see list of parts under details of "Headlights and Rear Light") (optional with 278 093 R91) (2)
22	278 093 R91	HEADLIGHT ASSEMBLY (Hobbs) (for components see list of parts under details of "Headlights and Rear Light") (optional with 273 286 R91) (2)
23	263 514 R91	CLIP, cable (for 3/8" bolt) (lower bolt of gas tank)
24	275 278 R91	BLOCK w/BLOCK, 42 915 D and BRACKET, 275 279 R1, junction and BRACKET headlight No. 10 NUT No. 10 x 1/2" std-rd-hd. SCREW No. 10 lock WASHER
25	57 062 DA	CABLE, junction block to headlight cables (2)
26	263 515 R91	CLIP, cable (for 5/16" bolt) (fan shroud) (3)
27	275 277 R91	HARNESS, cable
28	263 514 R91	CLIP, cable (for 3/8" bolt) (upper rear distributor bracket bolt)
29	353 892 R91	DISTRIBUTOR ASSEMBLY (for components see list of parts under details of "Distributor")
30	365 783 R91	COIL, ignition (will work for 353 875 R91)

-128-

ELECTRICAL SYSTEM
DIESEL ENGINE

REF. NO.	PART NUMBER	DESCRIPTION

ELECTRIC STARTING AND LIGHTING
(Battery Ignition) (TD-91 60301 to 65033) - Continued

31	263 310 R13	MANIFOLD ASSEMBLY, intake (for components see list of parts under details of "Intake Manifold and Exhaust Manifold")
32	266 768 R91	CABLE, coil to manifold switch
33	263 308 R91	CLIP, cable (for 1/2" bolt) (intake manifold front) 7/16 x 7/8 x 1/16" WASHER
34		CABLE, "A" terminal on generator to "Generator" on regulator (yellow) (order 275 277 R91)
35	264 164 R91	CLIP, cable (for 3/8" bolt) (generator brace bolt)
36		CABLE, "F" on generator to "F" on regulator (blue) (order 275 277 R91)
37	275 697 R91	GENERATOR ASSEMBLY (standard) (for components see list of parts under details of "Generator")
37	277 174 R91	GENERATOR, high output (for components see list of parts under details of "Generator (high output)"
38	263 514 R91	CLIP, cable (for 3/8" bolt) (lower outside distributor mounting bolt)
39	263 514 R91	CLIP, cable (for 3/8" bolt) (oil filter base bolt)
40	267 787 R91	CLIP, cable (for 7/16" bolt) (left center transmission housing)
41		CABLE, + charge indicator to fuse (furnished with fuse HOUSING, 275 276 R91)
42	275 276 R91	HOUSING, fuse
43		CABLE, lighting switch to fuse (furnished with fuse HOUSING, 275 276 R91)
44		CABLE, "charge indicator" to "battery" on regulator (pink) (order 275 277 R91)
45		CLIP, cable (mounted on dash) (welded) (3)
46	267 788 R91	CLIP, cable (for 3/8" bolt) (rear left clutch housing cover bolt)
47	273 567 R91	MOTOR ASSEMBLY, cranking (for components see list of parts under details of "Cranking Motor")
48	275 281 R91	CLIP, cable (for 3/8" bolt) (front center fender bolt)
49	263 514 R91	CLIP, cable (for 3/8" bolt) (front bolt to platform support)
50	273 299 R91	REGULATOR ASSEMBLY, voltage (standard) (for components see list of parts under details of "Voltage Regulator")
50	277 175 R91	REGULATOR ASSEMBLY, voltage (high output) (for components see list of parts under details of "Voltage Regulator")
51	266 855 R91	CABLE, battery to ground 1/2" cd-pltd. internal-external tooth lock WASHER
52	266 850 R92	BATTERY, wet charged (Auto-Lite) (optional with 269 453 R91) (2)
52	269 453 R91	BATTERY, wet charged (Globe-Union) (optional with 266 850 R92) (2)
52	277 374 R91	BATTERY, dry charged (Auto-Lite) (2)
53	266 854 R91	CABLE, battery to battery
	42 915 D	BLOCK, junction No. 10 NUT No. 10 x 1/2" slt-rd-hd. SCREW No. 10 lock WASHER
	275 279 R1	BRACKET, junction block
	356 062 R91	BOLT and NUT, battery cable (X)
	106 653	FUSE (cartridge type SFE-20)

X - As Required

ELECTRIC STARTING AND LIGHTING
(Magneto Ignition (TD-61 38951 to 40271)

-129-
ELECTRICAL SYSTEM
DIESEL ENGINE

ELECTRIC STARTING AND LIGHTING
(Magneto Ignition) (TD-61 38951 to 40271) - Continued

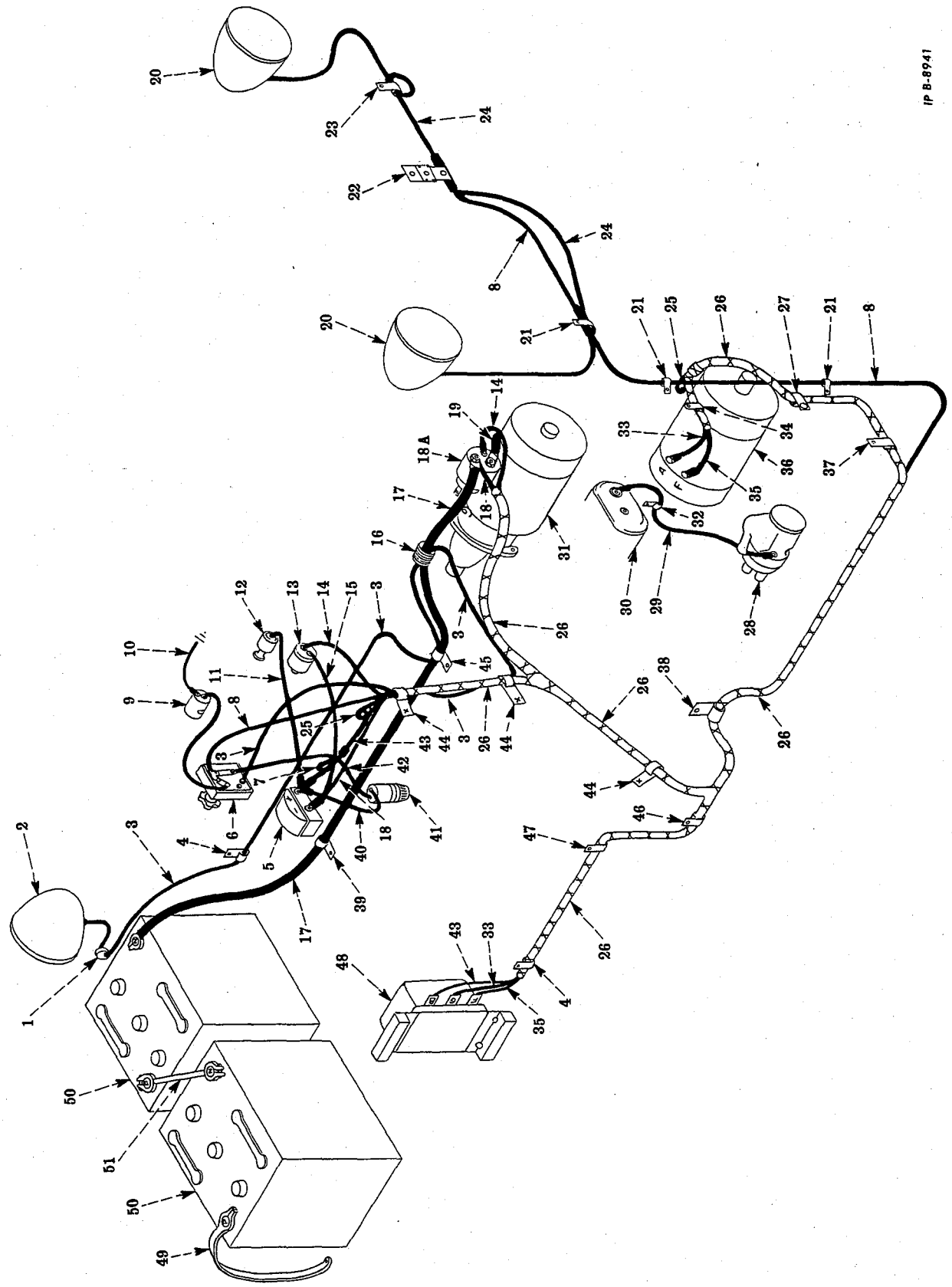

PRINTED IN UNITED STATES OF AMERICA

REF. NO.	PART NUMBER	DESCRIPTION

ELECTRIC STARTING AND LIGHTING
(Magneto Ignition) (TD-61 38951 to 40271) - Continued

1	112 734	GROMMET, cable harness (on seat side)
2	273 286 R91	REAR LIGHT ASSEMBLY (for components see list of parts under details of "Headlights and Rear Light") (Guide Lamp) (optional with 278 093 R91)
2	278 093 R91	REAR LIGHT ASSEMBLY (for components see list of parts under details of "Headlights and Rear Light") (Hobbs Lamp) (optional with 273 286 R91)
3	271 513 R91	CABLE, lighting switch to rear light
4	263 514 R91	CLIP, cable (for 3/8" bolt) (rear platform support) (2)
5	269 467 R92	AMMETER (for components see list of parts under details of "Instrument Panel")
6	275 282 R91	SWITCH, lighting (Delco-Remy No. 1994053) (for components see list of parts under details of "Lighting Switch")
7		CABLE, insulate terminal and tape securely to cable harness (order 275 381 R91)
8		CABLE, lighting switch to headlight junction block (black) (order 275 381 R91)
9	271 077 R91	LIGHT, dash (for components see list of parts under details of "Dash Light")
10	274 305 R91	CABLE, dash light ground to heat indicator mounting screw ground
11		CABLE, cigarette lighter to ignition switch (furnished with cigarette lighter) (part of ATTACHMENT, 278 730 R91)
12	362 000 R91	LIGHTER ASSEMBLY, cigarette (part of ATTACHMENT, 278 730 R91) (for components see list of parts under details of "Cigarette Lighter")
13	271 179 R91	SWITCH, starting (Delco-Remy No. 1996080) (for components see list of parts under details of "Starting Switch")
14		CABLE, starting switch to solenoid (gray) (order 275 381 R91)
15		CABLE, ammeter to starting switch (green) (order 275 381 R91)
16	112 745	GROMMET, cable harness (on dash)
17	273 901 R91	CABLE, battery to solenoid
18		CABLE, ammeter to solenoid (red) (order 275 381 R91)
18A		SOLENOID (for components see list of parts under details of "Cranking Motor")
19		CABLE, solenoid to cranking motor
20	273 286 R91	HEADLIGHT ASSEMBLY (for components see list of parts under details of "Headlights and Rear Light") (Guide Lamp) (optional with 278 093 R91) (2)
20	288 093 R91	HEADLIGHT ASSEMBLY (for components see list of parts under details of "Headlights and Rear Light") (Hobbs) (optional with 278 286 R91) (2)

-130-
ELECTRICAL SYSTEM
DIESEL ENGINE

REF. NO.	PART NUMBER	DESCRIPTION

ELECTRIC STARTING AND LIGHTING
(Magneto Ignition) (TD-61 38951 to 40271) - Continued

21	263 515 R91	CLIP, cable (for 5/16" bolt) (on fan shroud)
22	275 278 R91	BLOCK w/BLOCK, 42 915 D and BRACKET, 275 279 R11, junction and bracket No. 10 NUT No. 10 x 1/2" slt-rd-hd. SCREW No. 10 lock WASHER
23	263 514 R91	CLIP, cable (for 3/8" bolt) (for bolt of gas tank)
24	57 062 DA	CABLE, junction block to headlight cables (2)
25		CABLE, insulate terminal and tape securely to cable harness
26	275 381 R91	HARNESS, cable
27	263 514 R91	CLIP, cable (for 3/8" bolt) (upper rear distributor bracket bolt)
28	49 094 DD	MAGNETO ASSEMBLY (for components see list of parts under details of "Magneto")
29	266 768 R91	CABLE, magneto to manifold switch
30	263 345 R92	COVER ASSEMBLY, intake manifold (for components see list of parts under details of "Intake Manifold and Exhaust Manifold")
31	273 567 R91	MOTOR, cranking (Delco-Remy No. 1113038) (for components see list of parts under details of "Cranking Motor")
32	263 308 R91	CLIP, cable (for 1/2" bolt) (intake manifold front)
33		CABLE, "A" terminal on generator to generator terminal on regulator (yellow) (order 275 381 R91)
34	264 164 R91	CLIP, cable (for 3/8" bolt) (generator brace bolt)
35		CABLE, "F" on generator to "F" on regulator (blue) (order 275 381 R91)
36	275 697 R91	GENERATOR (Delco-Remy No. 1105109) (for components see list of parts under details of "Generator") (standard)
36	277 384 R91	GENERATOR (high output) (for components see list of parts under details of "Generator (high output)"
37	263 514 R91	CLIP, cable (for 3/8" bolt) (lower outside distributor mounting bolt)
38	263 514 R91	CLIP, cable (for 3/8" bolt) (oil filler base bolt)
39	267 787 R91	CLIP, cable (for 7/16" bolt) (left center transmission housing)
40		CABLE, ammeter to fuse (furnished with fuse HOUSING, 275 276 R91)
41	275 276 R91	HOUSING, fuse
42		CABLE, lighting switch to fuse (furnished with fuse housing)
43		CABLE, ammeter to battery on regulator (pink) (order 275 381 R91)

REF. NO.	PART NUMBER	DESCRIPTION
		ELECTRIC STARTING AND LIGHTING (Magneto Ignition) (TD-61 38951 to 40271) - Continued
44	271 513 R91	CLIP, cable (mounted on dash) (welded)
45	267 788 R91	CLIP, cable (for 3/8" bolt) (rear left clutch housing cover bolt)
46	275 281 R91	CLIP, cable (for 3/8" bolt) (front center fender bolt)
47	263 514 R91	CLIP, cable (for 3/8" bolt) (front bolt to platform support)
48	273 299 R91	REGULATOR ASSEMBLY, voltage (standard) (for components see list of parts under details of "Voltage Regulator")
48	277 175 R91	REGULATOR ASSEMBLY, voltage (for components see list of parts under details of "Voltage Regulator")
49	266 855 R91	CABLE, battery to ground 1/2" cd-pltd. internal-external tooth lock WASHER
50	266 850 R92	BATTERY, wet charged (Auto-Lite) (optional with 269 453 R91) (2)
50	269 453 R91	BATTERY, wet charged (Globe-Union) (optional with 266 850 R92) (2)
50	277 374 R91	BATTERY, dry charged (Auto-Lite) (2)
51	266 854 R91	CABLE, battery to battery
	263 740 R91	ATTACHMENT, magneto ignition (for tractors equipped with starting and lighting) Factory Application - Order on Machine Order Form Field Application - Order through Regular Service Parts Channels (Composed of - 1 COVER 263 345 R92 1 MAGNETO 49 094 DD 1 PLUG 432 482 2 WASHER 62 493 D)
	42 915 D	BLOCK, junction No. 10 NUT No. 10 x 1/2" slt-rd-hd. SCREW No. 10 lock WASHER
	356 022 R91	BOLT ASSEMBLY, battery terminal (X)
	275 279 R1	BRACKET, headlight junction block
	262 787 R91	CLIP, cable (for 7/16" bolt) (left fender mount)
	106 653	FUSE
	432 482	PLUG, ignition switch hole
		SCREW, No. 10NF x 5/16" slt-fil-hd. mach. (to magneto cable)
		WASHER, No. 10 medium cd-pltd. lock (to magneto cable)

X - As Required

-131-
ELECTRICAL SYSTEM
DIESEL ENGINE

PRINTED IN UNITED STATES OF AMERICA

ELECTRIC STARTING AND LIGHTING
Magneto Ignition) (TD-91 60301 to 65033)

-132-
ELECTRICAL SYSTEM
DIESEL ENGINE

ELECTRIC STARTING AND LIGHTING
(Magneto Ignition) (TD-91 60301 to 65033) - Continued

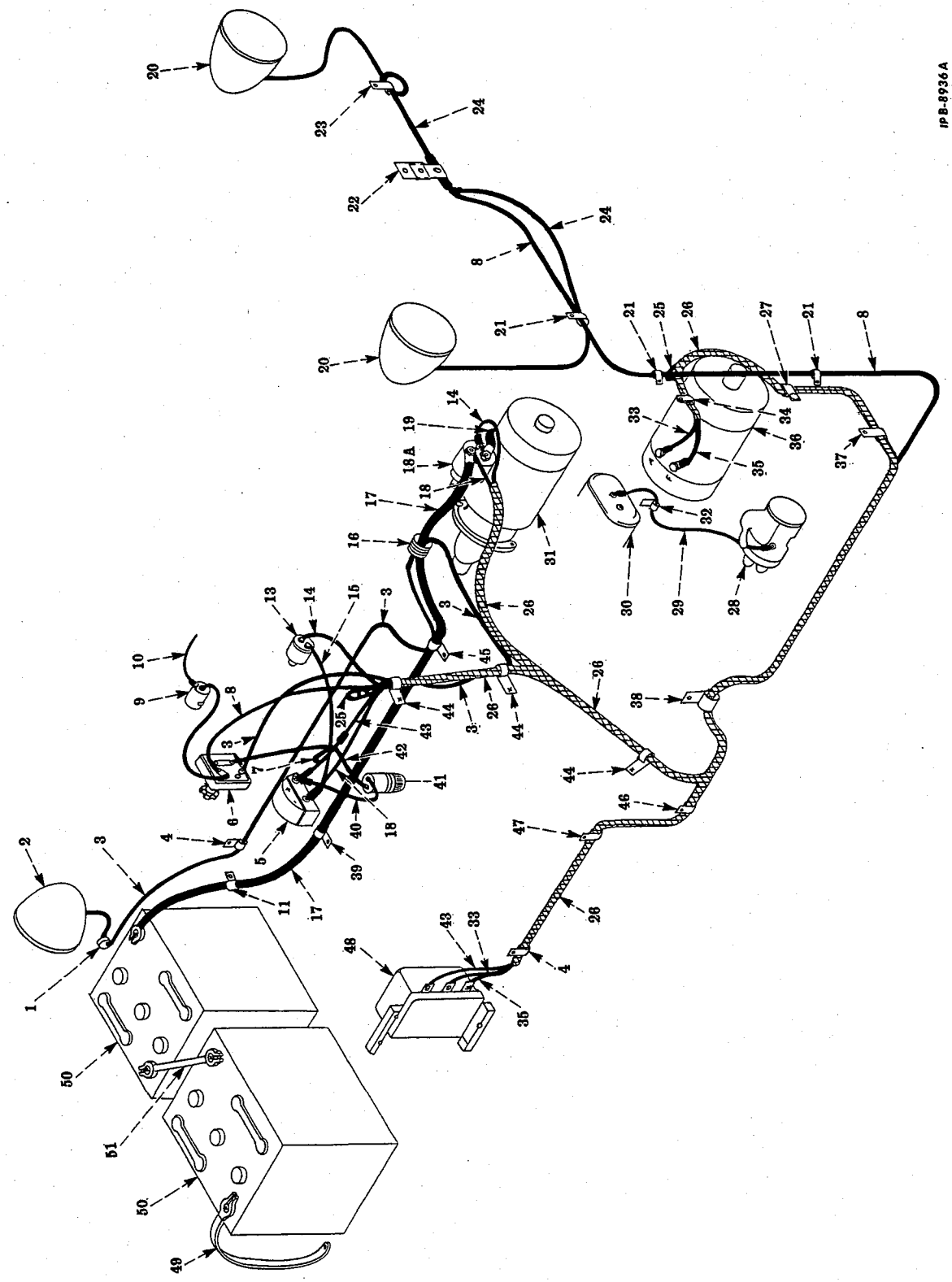

PRINTED IN UNITED STATES OF AMERICA

REF. NO.	PART NUMBER	DESCRIPTION

ELECTRIC STARTING AND LIGHTING
(Magneto Ignition) (TD-91 60301 to 65033) - Continued

1	112 734	GROMMET, cable harness (on seat side sheet)
2	273 286 R91	REAR LIGHT ASSEMBLY (Guide Lamp) (for components see list of parts under details of "Headlights and Rear Light") (optional with 278 093 R91)
2	278 093 R91	REAR LIGHT ASSEMBLY (Hobbs) (for components see list of parts under details of "Headlights and Rear Light") (optional with 273 286 R91)
3	275 280 R91	CABLE, lighting switch to rear light
4	263 514 R92	CLIP, cable (for 3/8" bolt) (rear bolt to platform support) (2)
5	269 467 R92	INDICATOR, charge
6	275 282 R91	SWITCH, lighting (for components see list of parts under details of "Lighting Switch")
7		CABLE (insulate terminal and tape securely to cable harness)
8		CABLE, lighting switch to head light junction block (black) (order 275 277 R91)
9	271 077 R91	LIGHT, dash (for components see list of parts under details of "Dash Light")
10	274 305 R91	CABLE, dash light, ground to heat indicator mounting screw ground
13	271 179 R1	SWITCH, starting (for components see list of parts under details of "Starting Switch")
14		CABLE, starting switch to solenoid (gray) (order 275 277 R91)
15		CABLE, charge indicator to starting switch (green) (order 275 277 R91)
16	112 745	GROMMET, cable harness (on dash)
17	275 174 R91	CABLE, battery to solenoid
18		CABLE, charge indicator to solenoid (red) (order 275 277 R91)
18A		SOLENOID, cranking motor (for components see list of parts under details of "Cranking Motor")
19		CABLE, solenoid to cranking motor (furnished with cranking motor)
20	273 286 R91	HEADLIGHT ASSEMBLY (Guide Lamp) (for components see list of parts under details of "Headlights and Rear Light") (optional with 278 093 R91) (2)
20	278 093 R91	HEADLIGHT ASSEMBLY (Hobbs) (for components see list of parts under details of "Headlights and Rear Light") (optional with 273 286 R91) (2)
21	263 515 R91	CLIP, cable (for 5/16" bolt) (fan shroud) (3)

-133-
ELECTRICAL SYSTEM
DIESEL ENGINE

REF. NO.	PART NUMBER	DESCRIPTION

ELECTRIC STARTING AND LIGHTING
(Magneto Ignition) (TD-91 60301 to 65033) - Continued

22	275 278 R91	BLOCK w/BLOCK, 42 915 D and BRACKET, 275 279 R1, junction and bracket No. 10 NUT No. 10 x 1/2" slt-rd-hd. SCREW No. 10 lock WASHER
23	263 514 R91	CLIP, cable (for 3/8" bolt) (lower bolt of gas tank)
24	57 062 DA	CABLE, junction block to headlight cables (2)
25		CABLE (insulate terminal and tape securely)
26	275 277 R91	HARNESS, cable
27	263 514 R91	CLIP, cable (for 3/8" bolt) (upper rear distributor bracket bolt)
28	49 094 DD	MAGNETO ASSEMBLY (for components see list of parts under details of "Magneto")
29	266 768 R91	CABLE, magneto to manifold switch
30	263 345 R92	COVER ASSEMBLY, manifold intake (for components see list of parts under details of "Intake Manifold and Exhaust Manifold")
31	273 567 R91	MOTOR ASSEMBLY, cranking (for components see list of parts under details of "Cranking Motor")
32	263 308 R91	CLIP, cable (for 1/2" bolt) (intake manifold front) 7/16 x 7/8 x 1/16" WASHER
33		CABLE, "A" terminal on generator to "Generator" on regulator (yellow) (order 275 277 R91
34	264 164 R91	CLIP, cable (for 3/8" bolt) (generator brace bolt)
35		CABLE, "F" on generator to "F" on regulator (blue) (order 275 277 R91)
36	275 697 R91	GENERATOR ASSEMBLY (standard) (for components see list of parts under details of "Generator")
36	271 174 R91	GENERATOR (high output) (for components see list of parts under details of "Generator (high output)"
37	263 514 R91	CLIP, cable (for 3/8" bolt) (lower outside distributor mounting bolt)
38	263 514 R91	CLIP, cable (for 3/8" bolt) (oil filter base bolt)
39	267 787 R91	CLIP, cable (for 7/16" bolt) (left center transmission housing)
39A	267 787 R91	CLIP, cable (for 7/16" bolt) (left fender mount)
40		CABLE, + charge indicator to fuse (furnished with fuse HOUSING, 275 276 R91)
41	275 276 R91	HOUSING, fuse
42		CABLE, lighting switch to fuse (furnished with fuse HOUSING, 275 276 R91)

REF. NO.	PART NUMBER	DESCRIPTION

ELECTRIC STARTING AND LIGHTING
(Magneto Ignition) (TD-91 60301 to 65033) - Continued

43		CABLE, charge indicator to "Battery" on regulator (pink) (order 275 277 R91)
44		CLIP, cable (mounted on dash) (welded) (3)
45	267 788 R91	CLIP, cable (for 3/8" bolt) (rear left clutch housing cover bolt)
46	275 281 R91	CLIP, cable (for 3/8" bolt) (front center fender bolt)
47	263 514 R91	CLIP, cable (for 3/8" bolt) (front bolt to platform support)
48	273 299 R91	REGULATOR ASSEMBLY, voltage (standard) (for components see list of parts under details of "Voltage Regulator")
48	277 175 R91	REGULATOR ASSEMBLY, voltage (high output) (for components see list of parts under details of "Voltage Regulator")
49	266 855 R91	CABLE, battery to ground 1/2" cd-pltd. internal-external tooth lock WASHER
50	266 850 R92	BATTERY, wet charged (Auto-Lite) (optional with 269 453 R91) (2)
50	269 453 R91	BATTERY, wet charged (Globe-Union) (optional with 266 850 R92) (2)
50	359 849 R92	BATTERY, dry charged (Auto-Lite) (optional with 359 851 R92) (2)
50	359 851 R92	BATTERY, dry charged (Globe-Union) (optional with 359 849 R92) (2)
51	266 854 R91	CABLE, battery to battery
	263 782 R91	ATTACHMENT, magneto ignition (for tractors equipped with electric starting and lighting) Factory Application - Order on Machine Order Form Field Application - Order through Regular Service Parts Channels (Composed of -

1	COVER	263 345 R92
X	GREASE	21 372 D
1	GASKET	52 520 DB
1	GASKET	55 780 DD
1	MAGNETO	49 094 DD
1	PLUG	432 482
2	WASHER	62 493 D)

	42 915 D	BLOCK, junction No. 10 NUT No. 10 x 1/2" slt-rd-hd. SCREW No. 10 lock WASHER
	275 279 R1	BRACKET, junction block
	356 062 R91	BOLT and NUT, battery cable (X)
	106 653	FUSE (cartridge type SFE-20)
	52 520 DB	GASKET, intake manifold end cover (also listed under heading "Intake Manifold and Exhaust Manifold")
	55 780 DD	GASKET, magneto flange (also listed under heading "Battery Ignition Unit")
	21 372 D	GREASE, tube of magneto (X)

REF. NO.	PART NUMBER	DESCRIPTION

ELECTRIC STARTING AND LIGHTING
(Magneto Ignition) (TD-91 60301 to 65033) - Continued

	432 482	PLUG, ignition switch hole No. 10NF x 5/16" cd-pltd. slt-fil-hd. mach. SCREW No. 10 cd-pltd. lock WASHER
	62 493 D	WASHER, magneto bolt (also listed under heading "Spark Plugs, Cables, Distributor or Magneto Drive and Bracket") (2)

X - As Required

ELECTRIC STARTING AND LIGHTING
(Battery Ignition) (TD-61 40272 up and TD-91 65034 up)

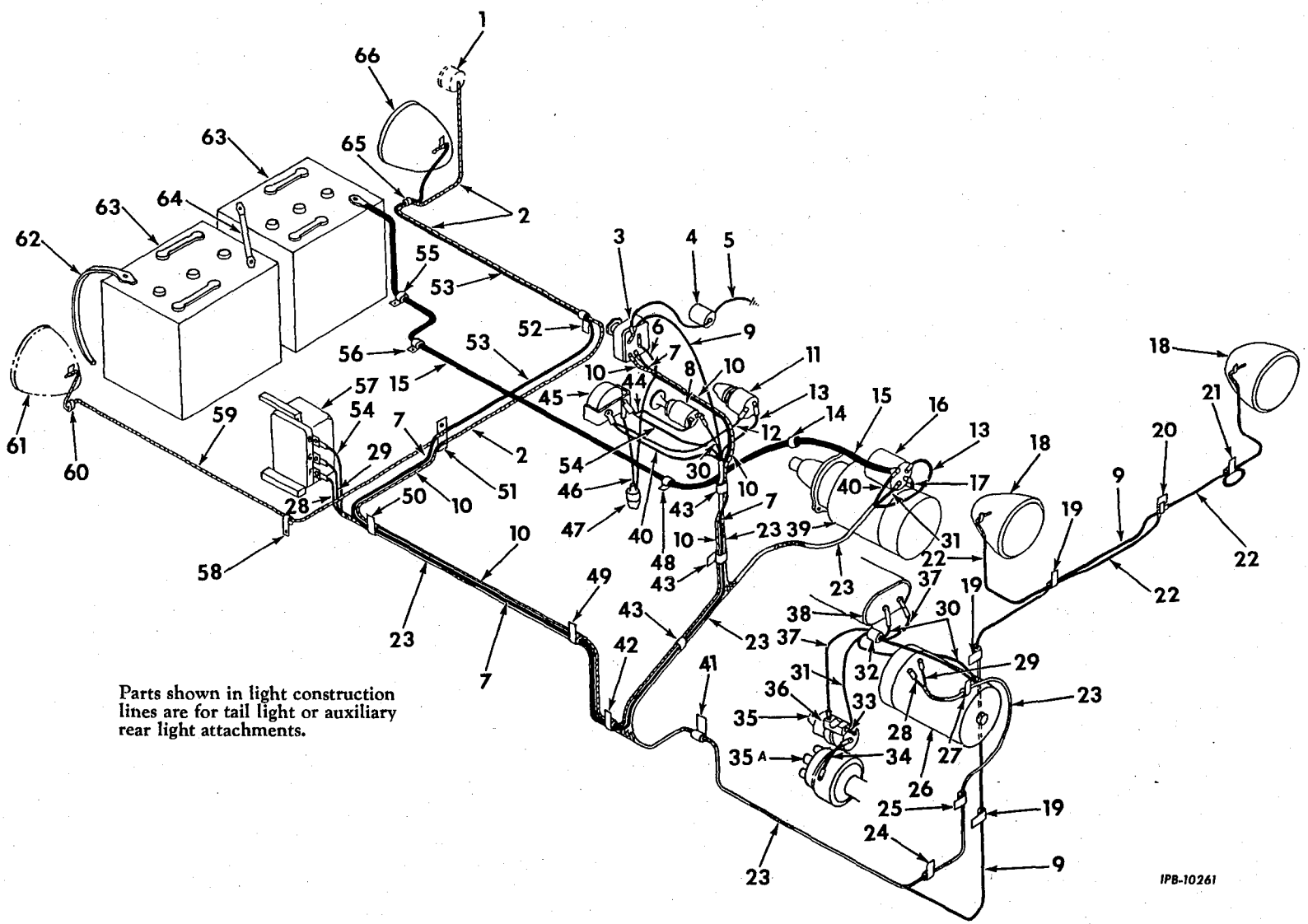

Parts shown in light construction lines are for tail light or auxiliary rear light attachments.

-135-
ELECTRICAL SYSTEM
DIESEL ENGINE

ELECTRIC STARTING AND LIGHTING
(Battery Ignition) (TD-61 40272 up and TD-91 65034 up) - Continued

ELECTRICAL SYSTEM
DIESEL ENGINE

REF. NO.	PART NUMBER	DESCRIPTION
		ELECTRIC STARTING AND LIGHTING (Battery Ignition) (TD-61 40272 up and TD-91 65034 up) - Continued
1	277 173 R91	LIGHT, tail (for components see list of parts under details of "Tail Light and Guard")
2	43 041 DA	CABLE, junction block to tail light
3	275 282 R91	SWITCH, lighting (for components see list of parts under details of "Lighting Switch")
4	271 077 R91	LIGHT, dash (for components see list of parts under details of "Dash Light")
5	274 305 R91	CABLE, to heat indicator mounting screw dash light ground
6		CABLE, lighting switch to fuse (furnished with fuse HOUSING, 275 276 R91)
7	358 581 R91	CABLE, lighting switch to rear light junction block
8	62 801 DC	SWITCH, ignition (for components see list of parts under details of "Ignition Switch")
9		CABLE, lighting switch to headlight junction block (black) (order 275 277 R92) (TD-91)
9		CABLE, lighting switch to headlight junction block (black) (order 275 381 R92) (TD-61)
10	277 460 R91	CABLE, lighting switch to tail light junction block (red)
11	271 179 R1	SWITCH, starting (for components see list of parts under details of "Starting Switch")
12		CABLE, ammeter to starting switch (green) (order 275 277 R92) (TD-91)
12		CABLE, ammeter to starting switch (green) (order 275 381 R92) (TD-61)
13		CABLE, starting switch to solenoid (gray) (order 275 277 R92) (TD-91)
13		CABLE, starting switch to solenoid (gray) (order 275 381 R92) (TD-61)
14	112 745	GROMMET, cable harness (on dash)
15	274 455 R91	CABLE, battery to solenoid (will work for 275 174 R91)
16		SOLENOID, cranking motor (for components see list of parts under details of "Cranking Motor")
17		CABLE, solenoid to cranking motor (furnished with cranking motor)
18	273 286 R91	HEADLIGHT ASSEMBLY (Guide Lamp) (for components see list of parts under details of "Headlights and Rear Light") (optional with 278 093 R91) (2)
18	278 093 R91	HEADLIGHT ASSEMBLY (Hobbs) (for components see list of parts under details of "Headlights and Rear Light") (optional with 273 286 R91) (2)
19	263 515 R91	CLIP, cable (for 5/16" bolt) (fan shroud) (3)
20	275 278 R91	BLOCK w/BLOCK, 42 915 D and BRACKET, 275 279 R1, junction and bracket headlight No. 10 NUT No. 10 x 1/2" slt-rd-hd. SCREW No. 10 lock WASHER
21	263 514 R91	CLIP, cable (for 3/8" bolt) (lower bolt of gas tank)
22	57 062 DA	CABLE, junction block to headlight (2)
23	275 277 R92	HARNESS, cable (TD-91)
23	275 381 R92	HARNESS, cable (TD-61)

-136-

ELECTRICAL SYSTEM
DIESEL ENGINE

REF. NO.	PART NUMBER	DESCRIPTION
		ELECTRIC STARTING AND LIGHTING (Battery Ignition) (TD-61 40272 up and TD-91 65034 up) - Continued
24	263 514 R91	CLIP, cable (for 3/8" bolt) (lower outside distributor mounting bolt)
25	263 514 R91	CLIP, cable (for 3/8" bolt) (upper rear distributor bracket bolt)
26	275 697 R91	GENERATOR ASSEMBLY (standard) (for components see list of parts under details of "Generator")
26	277 174 R91	GENERATOR ASSEMBLY (for components see list of parts under details of "Generator") (TD-91)
26	277 384 R91	GENERATOR ASSEMBLY (for components see list of parts under details of "Generator") (TD-61)
27	264 164 R91	CLIP, cable (for 3/8" bolt) (generator brace bolt)
28		CABLE, "F" terminal on generator to "F" on regulator (blue) (order 275 277 R92) (TD-91)
28		CABLE, "F" terminal on generator to "F" on regulator (blue) (order 275 381 R92) (TD-61)
29		CABLE, "A" terminal on generator to "Generator" terminal on regulator (yellow) (order 275 277 R92) (TD-91)
29		CABLE, "A" terminal on Generator to "Generator" terminal on regulator (yellow) (order 275 381 R92) (TD-61)
30		CABLE, ignition switch to manifold switch (brown) (order 275 277 R92) (TD-91)
30		CABLE, ignition switch to manifold switch (brown) (order 275 381 R92) (TD-61)
31		CABLE, resistor on coil to resistor terminal on solenoid (order 275 277 R92) (TD-91)
31		CABLE, resistor on coil to resistor terminal on solenoid (order 275 381 R92) (TD-61)
32	263 308 R91	CLIP, cable (for 1/2" bolt) (intake manifold front) WASHER, 7/16 x 7/8 x 1/16"
33		CABLE, resistor to coil (refer to "Battery Ignition Unit")
34	357 929 R92	CABLE, coil to distributor (also listed under "Battery Ignition Unit")
35	368 839 R91	COIL, ignition (also listed under "Battery Ignition Unit")
35A	353 892 R91	DISTRIBUTOR ASSEMBLY (for components see list of parts under details of "Distributor")
36	368 843 R91	CLAMP w/RESISTOR
37	279 614 R91	CABLE, resistor to manifold switch
38	263 311 R12	COVER, intake manifold (for components see list of parts under details of "Intake Manifold and Exhaust Manifold")
39	273 567 R92	MOTOR ASSEMBLY, cranking (for components see list of parts under details of "Cranking Motor")

ELECTRIC STARTING AND LIGHTING
(Battery Ignition) (TD-61 40272 up and TD-91 65034 up) - Continued

REF. NO.	PART NUMBER	DESCRIPTION
40		CABLE, ammeter to solenoid (red) (order 275 277 R92) (TD-91)
40		CABLE, ammeter to solenoid (red) (order 275 381 R92) (TD-61)
41	263 514 R91	CLIP, cable (for 3/8" bolt) (oil filter base bolt)
42	275 281 R91	CLIP, cable (for 3/8" bolt) (front center fender bolt)
43		CLIP, cable (mounted on dash) (welded) (3)
44		CABLE, ignition switch to ammeter (orange) (order 275 277 R92) (TD-91)
44		CABLE, ignition switch to ammeter (orange) (order 275 381 R92) (TD-61)
45	269 467 R92	AMMETER
46		CALBE (+ side) ammeter to fuse (furnished with fuse HOUSING, 275 276 R91)
47	275 276 R91	HOUSING, fuse
48	267 788 R91	CLIP, cable (for 3/8" bolt) (rear left clutch housing cover bolt)
49	263 514 R91	CLIP, cable (for 3/8" bolt) (front bolt to platform support)
50	263 514 R91	CLIP, cable (for 3/8" bolt) (rear bolt to platform support)
51	300 559 R91	BLOCK, junction (rear light) No. 10NF NUT (2) No. 10NF x 5/8" slt-rd-hd. mach. SCREW (2) No. 10 lock WASHER (2)
52	362 120 R1	CLIP, cable (mounted on side sheet bracket)
53	266 767 R91	CABLE, junction block to rear light
54		CABLE, "Ammeter" to "Battery" on regulator (pink) (order 275 277 R92) (TD-91)
54		CABLE, "Ammeter" to "Battery" on regulator (pink) (order 275 381 R92) (TD-61)
55	267 787 R91	CLIP, cable (for 7/16" bolt) (left fender mount)
56	267 787 R91	CLIP, cable (for 7/16" bolt) (left center transmission housing)
57	273 299 R91	REGULATOR ASSEMBLY, voltage (standard) (for components see list of parts under details of "Voltage Regulator")
57	277 175 R91	REGULATOR ASSEMBLY, voltage (for components see list of parts under details of "Voltage Regulator")
58	362 120 R1	CLIP, cable (on side sheet bracket)
59	266 767 R91	CABLE, junction block to "auxiliary rear light"
60	112 734	GROMMET, cable (on side sheet)
61	273 286 R91	REAR LIGHT (Guide Lamp) (for components see list of parts under details of "Headlights and Rear Light") (optional with 278 093 R91)
61	278 093 R91	REAR LIGHT (Hobbs) (for components see list of parts under details of "Headlights and Rear Light") (optional with 273 286 R91)

-137-
ELECTRICAL SYSTEM
DIESEL ENGINE

ELECTRIC STARTING AND LIGHTING
(Battery Ignition) (TD-61 40272 up and TD-91 65034 up) - Continued

REF. NO.	PART NUMBER	DESCRIPTION
62	266 855 R91	CABLE, battery to ground
63	266 850 R92	BATTERY, wet charged (Auto-Lite) (optional with 269 453 R91) (2)
63	269 453 R91	BATTERY, wet charged (Globe-Union) (optional with 266 850 R92) (2)
63	277 374 R91	BATTERY, dry charged (Auto-Lite) (2)
64	266 854 R91	CABLE, battery to battery
65	112 734	GROMMET, cable harness (on side sheet)
66	273 286 R91	REAR LIGHT ASSEMBLY (Guide Lamp) (for components see list of parts under details of "Headlights and Rear Light") (optional with 278 093 R91)
66	278 093 R91	REAR LIGHT ASSEMBLY (Hobbs) (for components see list of parts under details of "Headlights and Rear Light") (optional with 273 286 R91)
	42 915 D	BLOCK, junction No. 10 NUT No. 10 x 1/2" slt-rd-hd. SCREW No. 10 lock WASHER
	275 279 R1	BRACKET, junction block
	356 062 R91	BOLT and NUT, battery cable
	106 653	FUSE (cartridge type SFE-20)

ELECTRIC STARTING AND LIGHTING
(Magneto Ignition) (TD-61 40272 up and TD-91 65034 up)

ELECTRIC STARTING AND LIGHTING
(Magneto Ignition) (TD-61 40272 up and TD-91 65034 up) - Continued

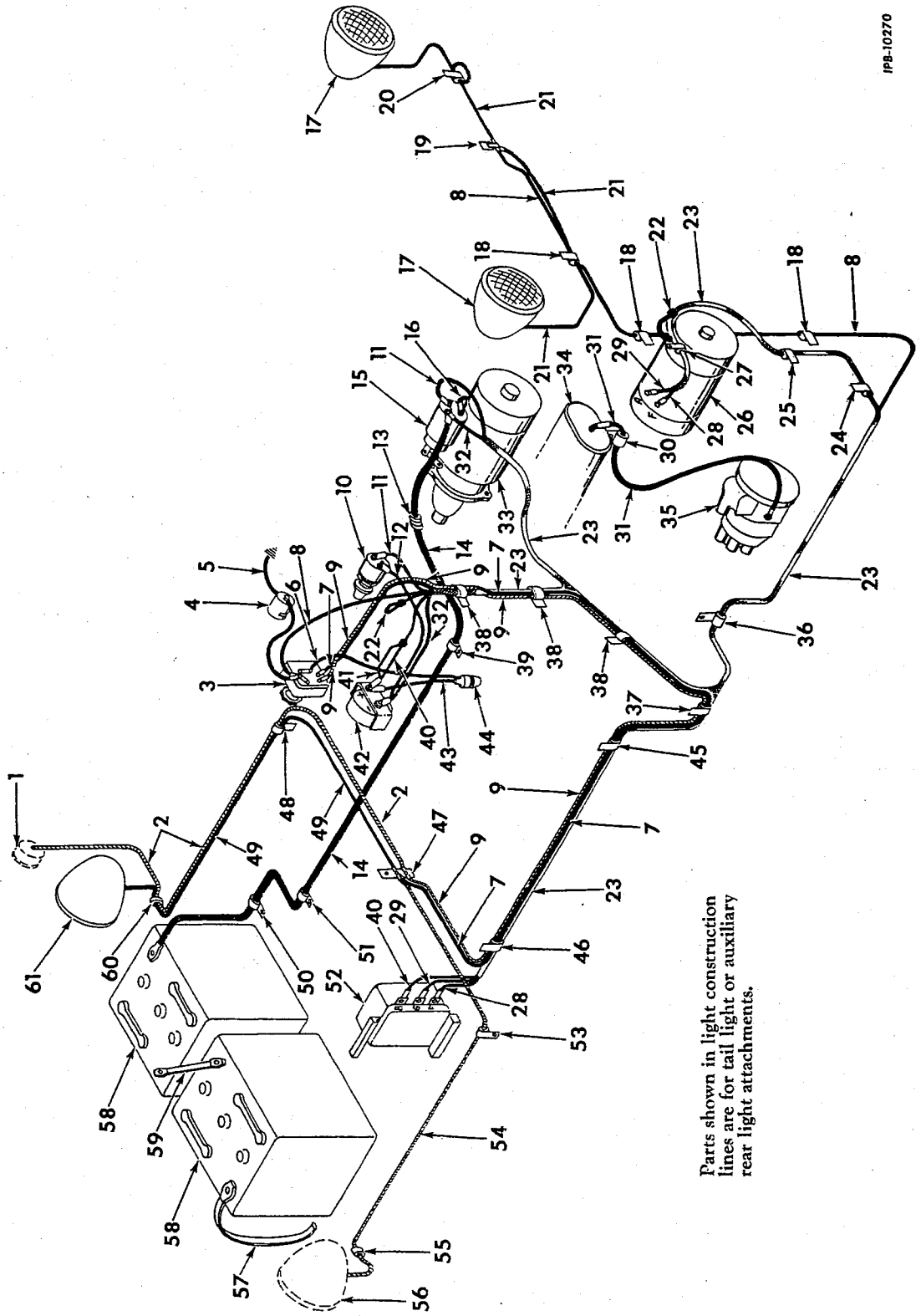

Parts shown in light construction lines are for tail light or auxiliary rear light attachments.

ELECTRICAL SYSTEM
DIESEL ENGINE

REF. NO.	PART NUMBER	DESCRIPTION
		ELECTRIC STARTING AND LIGHTING (Magneto Ignition) (TD-61 40272 up and TD-91 65034 up) - Continued
1	277 173 R91	LIGHT, tail (for components see list of parts under details of "Tail Light and Guard")
2	43 041 DA	CABLE, junction block to tail light
3	275 282 R91	SWITCH, lighting (for components see list of parts under details of "Lighting Switch")
4	271 077 R91	LIGHT, dash (for components see list of parts under details of Dash Light")
5	274 305 R91	CABLE, ground to heat indicator mounting screw dash light ground
6		CABLE, lighting switch to fuse (furnished with fuse HOUSING, 275 276 R91)
7	358 581 R91	CABLE, lighting switch to rear light junction block
8		CABLE, lighting switch to headlight junction block (black) (order 275 277 R92) (TD-91)
8		CABLE, lighting switch to headlight junction block (black) (order 275 381 R92) (TD-61)
9	277 460 R91	CABLE, lighting switch to junction block (red)
10	271 179 R1	SWITCH, starting (for components see list of parts under details of "Starting Switch")
11		CABLE, starting switch to solenoid (gray) (order 275 277 R92) (TD-91)
11		CABLE, starting switch to solenoid (gray) (order 275 381 R92) (TD-61)
12		CABLE, ammeter to starting switch (green) (order 275 277 R92) (TD-91)
12		CABLE, ammeter to starting switch (green) (order 275 381 R92) (TD-61)
13	112 745	GROMMET, cable harness (on dash)
14	275 174 R91	CABLE, battery to solenoid
15		SOLENOID, cranking motor (for components see list of parts under details of "Cranking Motor")
16		CABLE, solenoid to cranking motor (furnished with cranking motor)
17	273 286 R91	HEADLIGHT ASSEMBLY (Guide Lamp) (for components see list of parts under details of "Headlights and Rear Light") (optional with 278 093 R91) (2)
17	278 093 R91	HEADLIGHT ASSEMBLY (Hobbs) (for components see list of parts under details of "Headlights and Rear Light") (optional with 273 286 R91) (2)
18	263 515 R91	CLIP, cable (for 5/16" bolt) (fan shroud) (3)
19	275 278 R91	BLOCK w/BLOCK, 42 915 D and BRACKET, 275 279 R1, junction and bracket
20	263 514 R91	CLIP, cable (for 3/8" bolt) (lower bolt of gas tank)
21	57 062 DA	CABLE, junction block to headlight (2)
22		CABLE (insulate terminal and tape securely)
23	275 277 R92	HARNESS, cable (TD-91)
23	275 381 R92	HARNESS, cable (TD-61)
24	263 514 R91	CLIP, cable (for 3/8" bolt) (lower outside distributor mounting bolt)

ELECTRICAL SYSTEM
DIESEL ENGINE

REF. NO.	PART NUMBER	DESCRIPTION
		ELECTRIC STARTING AND LIGHTING (Magneto Ignition) (TD-61 40272 up and TD-91 65034 up) - Continued
25	263 514 R91	CLIP, cable (for 3/8" bolt) (upper rear distributor bracket bolt)
26	275 697 R91	GENERATOR ASSEMBLY (standard) (for components see list of parts under details of "Generator")
26	277 174 R91	GENERATOR ASSEMBLY (for components see list of parts under details of "Generator") (TD-91)
26	277 384 R91	GENERATOR ASSEMBLY (for components see list of parts under details of "Generator") (TD-61)
27	264 164 R91	CLIP, cable (for 3/8" bolt) (generator brace bolt)
28		CABLE, "F" on generator to "F" on regulator (blue) (order 275 277 R92) (TD-91)
28		CABLE, "F" on generator to "F" on regulator (blue) (order 275 381 R92) (TD-61)
29		CABLE, "A" terminal on generator to "Generator" on regulator (yellow) (order 275 277 R92) (TD-91)
29		CABLE, "A" terminal on generator to "Generator" on regulator (yellow) (order 275 381 R91) (TD-61)
30	263 308 R91	CLIP, cable (for 1/2" bolt) (intake manifold front) 7/16 x 7/8 x 1/16" WASHER
31	266 768 R91	CABLE, magneto to manifold switch
32		CABLE, ammeter to solenoid (red) (order 275 277 R92) (TD-91)
32		CABLE, ammeter to solenoid (red) (order 271 381 R92) (TD-61)
33	273 567 R92	MOTOR ASSEMBLY, cranking (for components see list of parts under details of "Cranking Motor")
34	263 345 R92	MANIFOLD ASSEMBLY, intake (for components see list of parts under details of "Intake Manifold and Exhaust Manifold")
35	49 094 DD	MAGNETO ASSEMBLY (for components see list of parts under details of "Magneto")
36	263 514 R91	CLIP, cable (for 3/8" bolt) (oil filter base bolt)
37	275 281 R91	CLIP, cable (for 3/8" bolt) (front center fender bolt)
38		CLIP, cable (mounted on dash) (welded) (3)
39	267 788 R91	CLIP, cable (for 3/8" bolt) (rear left clutch housing cover bolt)
40		CABLE, ammeter to "Battery" on regulator (pink) (order 275 277 R92) (TD-91)
40		CABLE, ammeter to "Battery" on regulator (pink) (order 275 381 R92) (TD-61)
41		CABLE (insulate terminal and tape securely to cable harness)
42	269 467 R92	AMMETER

REF. NO.	PART NUMBER	DESCRIPTION

ELECTRIC STARTING AND LIGHTING
(Magneto Ignition) (TD-61 40272 up and TD-91 65034 up) - Continued

43		CABLE, + ammeter to fuse (furnished with fuse HOUSING, 275 276 R91)
44	275 276 R91	HOUSING, fuse
45	263 514 R91	CLIP, cable (for 3/8" bolt) (front bolt to platform support)
46	263 514 R91	CLIP, cable (for 3/8" bolt) (rear bolt to platform support)
47	300 559 R91	BLOCK, junction (rear light) No. 10NF NUT (2) No. 10NF x 5/8" slt-rd-hd. mach. SCREW (2) No. 10 lock WASHER (2)
48	362 120 R1	CLIP, cable (for 3/8" bolt) (mount on side sheet bracket)
49	266 767 R91	CABLE, junction block to rear lamp
50	267 787 R91	CLIP, cable (for 7/16" bolt) (left fender mount)
51	267 787 R91	CLIP, cable (for 7/16" bolt) (left center transmission housing)
52	273 299 R91	REGULATOR ASSEMBLY, voltage (standard) (for components see list of parts under details of "Voltage Regulator")
52	277 175 R91	REGULATOR ASSEMBLY, voltage (for components see list of parts under details of "Voltage Regulator")
53	362 120 R1	CLIP, cable (on side sheet bracket)
54	266 767 R91	CABLE, junction block to auxiliary rear light
55	112 734	GROMMET, cable rubber (on side sheet)
56	273 286 R91	REAR LIGHT (Guide Lamp) (for components see list of parts under details of "Headlights and Rear Light") (optional with 278 093 R91)
56	278 093 R91	REAR LIGHT (Hobbs) (for components see list of parts under details of "Headlights and Rear Light") (optional with 273 286 R91)
57	266 855 R91	CABLE, battery to ground 1/2" cd-pltd. internal-tooth lock WASHER
58	266 850 R92	BATTERY, wet charged (Auto-Lite) (optional with 269 453 R91) (2)
58	269 453 R91	BATTERY, wet charged (Globe-Union) (optional with 266 850 R92) (2)
58	277 374 R91	BATTERY, dry charged (Auto-Lite) (2)
59	266 854 R91	CABLE, battery to battery
60	112 734	GROMMET, cable harness (on seat side sheet)
61	273 286 R91	REAR LIGHT ASSEMBLY (Guide Lamp) (for components see list of parts under details of "Headlights and Rear Light") (optional with 278 093 R91)
61	278 093 R91	REAR LIGHT ASSEMBLY (Hobbs) (for components see list of parts under details of "Headlights and Rear Light") (optional with 273 286 R91)

-140-
ELECTRICAL SYSTEM
DIESEL ENGINE

REF. NO.	PART NUMBER	DESCRIPTION

ELECTRIC STARTING AND LIGHTING
(Magneto Ignition) (TD-61 40272 up and TD-91 65034 up) - Continued

263 782 R91		ATTACHMENT, magneto ignition (for tractors equipped with electric starting and lighting) (TD-91) Factory Application - Order on Machine Order Form. Field Application - Order through Regular Service Parts Channels. (Composed of - 1 COVER 263 345 R92 X GREASE 21 372 D 1 GASKET 52 520 DB 1 GASKET 55 780 DD 1 MAGNETO 49 094 DD 1 PLUG 432 482 2 WASHER 62 493 D)
263 740 R91		ATTACHMENT, magneto ignition (for tractors equipped with electric starting and lighting) (TD-61) Factory Application - Order on Machine Order Form. Field Application - Order through Regular Service Parts Channels. (Composed of - 1 COVER 263 345 R92 X GREASE 21 372 D 1 GASKET 52 520 DB 1 GASKET 55 780 DD 1 MAGNETO 49 094 DD 1 PLUG 432 482 2 WASHER 62 493 D)
42 915 D		BLOCK, junction No. 10 NUT No. 10 x 1/2" slt-rd-hd. SCREW No. 10 lock WASHER
275 279 R1		BRACKET, junction block
356 062 R91		BOLT w/NUT, battery cable
106 653		FUSE (cartridge type SFE-20)
52 520 DB		GASKET, intake manifold end cover (also listed under heading "Intake Manifold and Exhaust Manifold")
57 780 DD		GASKET, magneto flange (also listed under heading "Battery Ignition Unit")
21 372 D		GREASE, tube of magneto (X)
432 482		PLUG, ignition switch hole No. 10NF x 5/16" cd-pltd. slt-fil-hd. mach. SCREW No. 10 cd-pltd. lock WASHER
62 493 D		WASHER, magneto bolt (also listed under heading "Spark Plugs, Cables, Distributor or Magneto Drive and Bracket") (2)

X - As Required

CLUTCH

REF. NO.	PART NUMBER	DESCRIPTION

ENGINE OVER-CENTER CLUTCH 12"
(Hand Operated) (Rockford Drilling Machine) (T-61 and TD-61)

-141-

CLUTCH

REF. NO. | PART NUMBER | DESCRIPTION

ENGINE OVER-CENTER CLUTCH 12"
(Hand Operated) (Rockford Drilling Machine) (T-61 and TD-61) - Continued

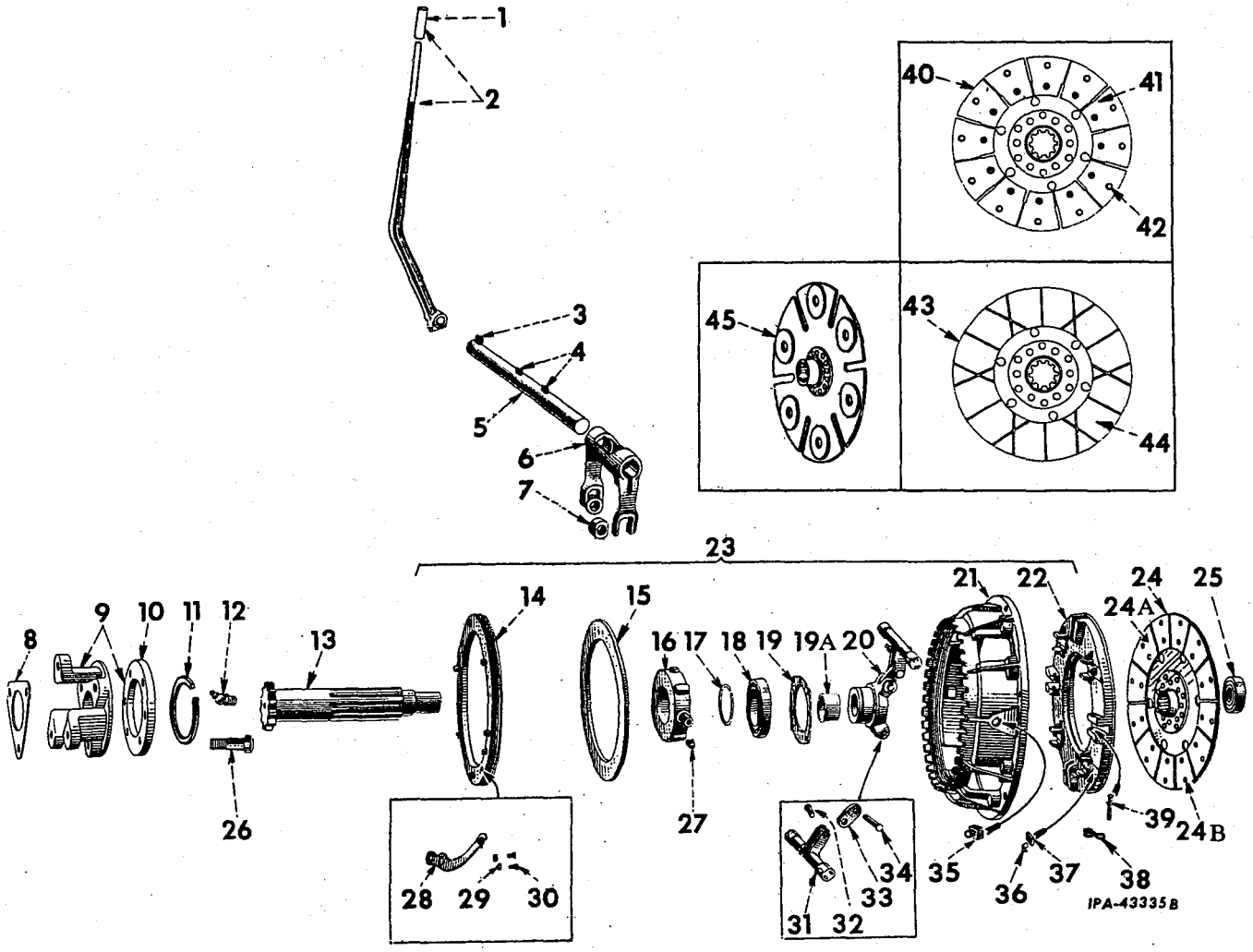

1	41 597 DA	HANDLE, engine clutch hand lever
2	275 227 R11	LEVER w/HANDLE, 41 597 DA, engine clutch hand 1/2NF NUT 1/2NF x 2-1/2" hex-hd. cap SCREW 1/2" lock WASHER
3	103 909	KEY, No. 18, 1/4 x 1-1/8" engine clutch hand lever (Woodruff)
4	103 462	KEY, No. 18, 3/16 x 1" engine clutch hand lever (Woodruff) (2)
5	275 347 R1	SHAFT, engine clutch release
6	8 247 DA	FORK, engine clutch release 3/8NF x 1-1/2" hex-hd. cap SCREW (2) 3/8" lock WASHER (2)
7	51 227 D	BUSHING, engine clutch release pin (2)
8	259 688 R1	PLATE, engine clutch shaft end 5/16NF x 1/2" hex-hd. cap SCREW (3) 5/16" lock WASHER (3)
9	266 457 R11	COUPLING w/FACING and RIVET, 21 407 H, engine clutch
	21 407 H	RIVET, engine clutch brake facing (6)
10	259 689 R11	PACKAGE, engine clutch brake facing field service (consists of FACING and six RIVETS, 21 407 H)
11	266 458 R1	RING, engine clutch coupling snap
12	18 275 R91	FITTING, engine clutch pilot bearing lubrication (Alemite No. 1623B)
13	266 456 R1	SHAFT, engine clutch
14	57 252 DB	RING, adjusting (CL-4817-3)
15	42 236 D	PLATE, adjusting ring (CL-3563)

PRINTED IN UNITED STATES OF AMERICA

CLUTCH

REF. NO.	PART NUMBER	DESCRIPTION
		ENGINE OVER-CENTER CLUTCH 12" (Hand Operated) (Rockford Drilling Machine) (T-61 and TD-61) - Continued
16	55 232 DA	CARRIER, release bearing (CL-4649)
17	29 780 D	RING, snap (CL-3302)
18	ST 312	BEARING, ball
19	31 242 DA	PLATE, bearing (CL-3401-4) 5/16 x 5/8" hex-hd. cap SCREW w/lock WASHER (CL-2932) (4)
19A	55 741 D	BUSHING (CL-3559)
20	55 725 DCXA	SLEEVE w/two BUSHINGS, 55 741 D and FITTING, 271 282 (CL-4839-2)
21	42 231 DX	PLATE w/four STUDS, 26 036 D, back (UCL-3565)
22	273 168 R91	PLATE w/CAMBLOCK, 273 169 R91, pressur (UCL-1-3564)
23	55 687 DG	COVER ASSEMBLY, less driven clutch member (UCLA-27-3565) (Composed of - 1 BEARING ST 312 1 CAMSHAFT 273 167 R92 1 CARRIER 55 232 DA 2 LINK 43 207 D 1 LOCK 273 264 R1 4 PIN 26 032 D 2 PACKAGE 267 679 R91 2 PACKAGE 267 680 R91 1 PLATE 31 242 DA 1 PLATE 42 231 DX 1 PLATE 42 236 D 1 PLATE 273 168 R91 1 RING 29 780 D 1 RING 57 252 DB 1 SCREW 61 115 D 1 SLEEVE 55 725 DCXA 4 SPRING 38 514 D 4 WASHER 267 689 R1 4 WASHER 615 029 R1) 1/2 x 1-1/2" hex-hd. cap SCREW (6) 1/2" lock WASHER (6)
24	303 764 R91	MEMBER w/two sintered metal FACING, 303 765 R1 and twenty-four RIVET, 96 189 R1 (UCL-35-38322-1)
24A	303 765 R1	FACING, sintered metal clutch (CL-10928-63) (2)
24B	96 189 R1	RIVET, tubular clutch facing (CL-6058-1) (24)
25	ST 208 B	BEARING, clutch pilot ball (used with T-61)
25	ST 544	BEARING, clutch pilot ball (used with TD-61)
26	54 969 D	BOLT, engine clutch coupling dowel (3) 7/16NF NUT (3) 7/16" lock WASHER (3)
27	271 417	FITTING, engine clutch release bearing lubrication (optional with 271 285)
27	271 285	FITTING, engine clutch release bearing lubrication (optional with 271 417)
28	273 264 R1	LOCK, adjusting (CL-10123)
29		NUT, 3/8" adjusting lock screw (light) (CL-1608)

CLUTCH

REF. NO.	PART NUMBER	DESCRIPTION
		ENGINE OVER-CENTER CLUTCH 12" (Hand Operated) (Rockford Drilling Machine) (T-61 and TD-61) - Continued
30	61 115 D	SCREW, adjusting lock (CL-5215)
31	273 167 R92	CAMSHAFT (set of two) (w/two FITTINGS, 271 284) (UCL-7-4337-7-52)
32	267 680 R91	PACKAGE, connecting link pin (short) field service (consists of PIN (short), WASHER, 615 029 R1 and WASHER, 267 689 R1 for 3/8" dia. pin) (UCL-9315-C) (2)
	615 029 R1	WASHER, 3/8 x 3/4" x No. 16 ga. (CL-4347) (2)
	267 689 R1	"X" WASHER (CL-9318) (2)
33	43 207 D	LINK, connecting (CL-4339-1) (2)
34	267 679 R91	PACKAGE, connecting link pin (long) field service (consists of PIN (long), WASHER, 615 029 R1 and WASHER, 267 689 R1 for 3/8" dia. pin) (UCL-9314-1C) (2)
35	26 036 D	STUD, drive (CL-3011) (4)
36		WASHER, 1/4" external-tooth lock (CL-3468) (4)
37	273 169 R91	CAMBLOCK SET (consists of four CAMBLOCKS, with four SCREWS, 261 106 R1) (UCL-3478-2-54)
38	38 514 D	SPRING, return (CL-3558) (4)
39	26 032 D	PIN, return spring (CL-3030) (4) 1/16 x 1/2" cotter PIN (CL-3923) (4)
40	277 415 R91	MEMBER w/bi-metallic FACING, driven clutch (UCL-28-3832-1)
41	277 416 R91	PACKAGE, clutch facing field service (bi-metallic) (consists of two clutch FACING and twenty-six RIVET, 277 682 R1) (CL-10682-13-CR2)
42	277 682 R1	RIVET, clutch facing (used with PACKAGE 277 416 R91) (CL-6058) (26)
43	277 423 R91	MEMBER w/asbestos metallic FACING, driven clutch (UCL-29-3832-CR1)
44	277 424 R91	PACKAGE, clutch facing field service (asbestos metallic) (consists of two clutch FACING and twenty-six RIVET, 28 755 D) (UCL-6826-14CR-2)
45	273 259 R91	MEMBER, driven clutch, w/cerametallic FACING (UCL-14-3832-1)
	271 282	FITTING, lubrication (Alemite 1611B) (used with sleeve) (optional with 271 414) (CL-7926)
	271 414	FITTING, lubrication (Lincoln 105100) (used with sleeve) (optional with 271 282) (CL-7926)
	271 284	FITTING, lubrication (Alemite 1612-B) (used with camshaft (optional with 271 416) (CL-10251) (2)
	271 416	FITTING, lubrication (Lincoln 105300) (used with camshaft) (optional with 271 284) (CL-10251) (2)
	28 755 D	RIVET, clutch facing (used with PACKAGE, 277 424 R91) (CL-1525) (26)

ENGINE OVER-CENTER CLUTCH 13"
(Hand Operated) (Rockford Drilling Machine)
(TD-91)

ENGINE OVER-CENTER CLUTCH 13"
(Hand Operated) (Rockford Drilling Machine)
(TD-91) - Continued

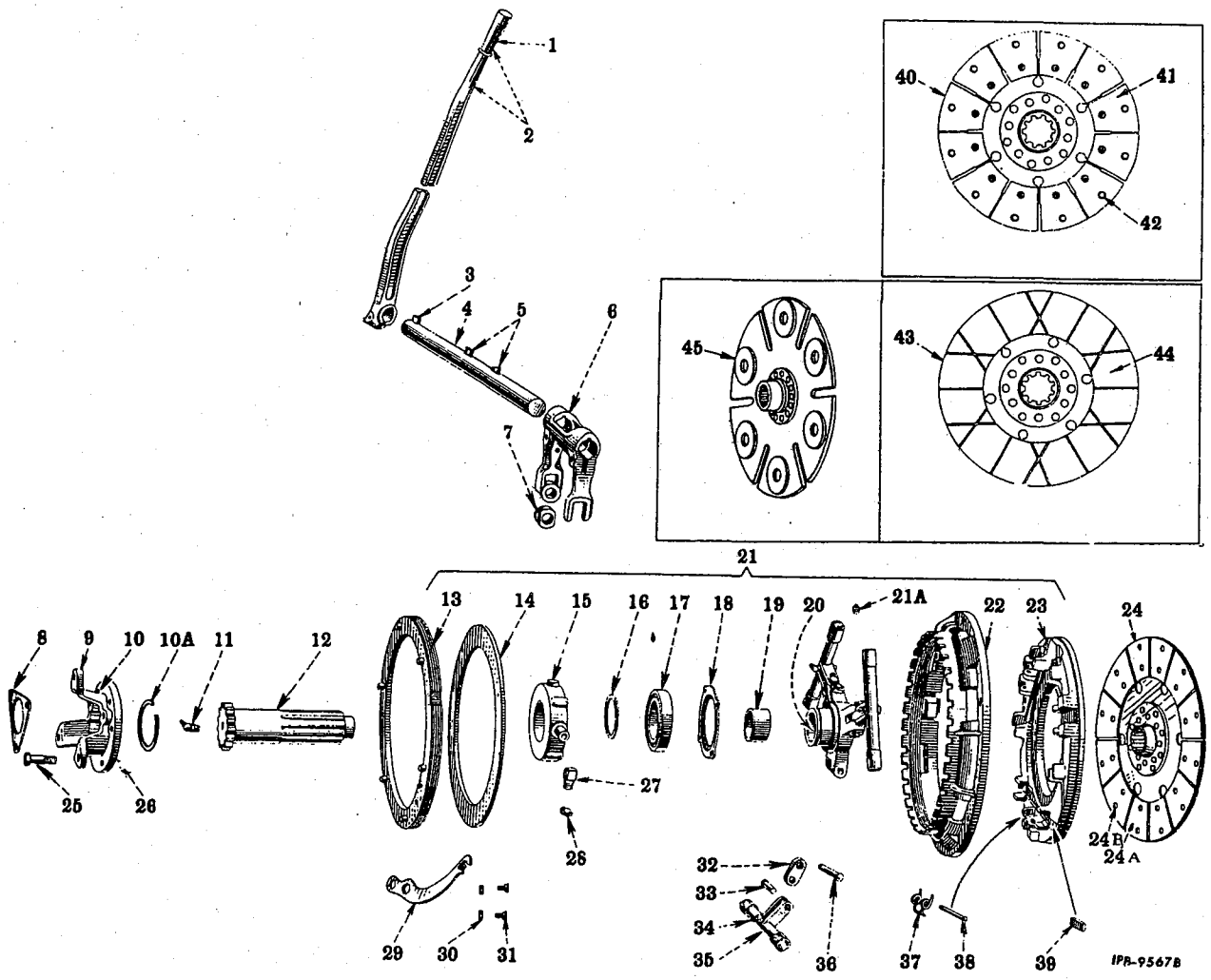

Ref. No.	IH Part Number	Description
1	41 597 DA	HANDLE, engine clutch hand lever
2	275 227 R11	LEVER w/HANDLE, 41 597 DA, engine clutch hand 1/2NF x 2-1/2" hex-hd cap SCREW 1/2NF NUT 1/2" lock WASHER
3	103 909	KEY, No. 18, 1/4 x 1-1/8" engine clutch hand lever (Woodruff)
4	53 494 D	SHAFT, engine clutch release
5	103 462	KEY, No. 13, 3/16 x 1" engine clutch release fork (Woodruff) (2)
6	8 247 DA	FORK, engine clutch release 3/8NF x 1-1/2" hex-hd cap SCREW (2) 3/8" lock WASHER (2)
7	51 227 DA	BUSHING, engine clutch release pin (2)
8	259 688 R1	PLATE, engine clutch shaft end 5/16NF x 1/2" hex-hd cap SCREW (3) 5/16" lock WASHER (3)
9	266 457 R11	COUPLING w/FACING and six RIVETS, 21 407 H, engine clutch
10	21 407 H	RIVET, type "C" .186 x 7/16" engine clutch brake disc facing (6)
10A	266 458 R1	RING, engine clutch coupling snap
11	271 416	FITTING, engine clutch pilot bearing lubrication (Lincoln 105300) (optional with 271 284)

Ref. No.	IH Part Number	Description
11	271 284	FITTING, engine clutch pilot bearing lubrication (Alemite 1612-B) (optional with 271 416)
12	266 459 R1	SHAFT, engine clutch
13	55 371 DA	RING, adjusting (CL-4815-1)
14	31 238 D	PLATE, adjusting ring (CL-3461)
15	317 860 R91	CARRIER, throw out bearing (UCL-10742-1)
15	55 232 DA	CARRIER, bearing (CL-4649) ⊕
16	29 780 D	RING, snap (CL-3302)
17	972 386 R91	BEARING, throw out ball ⊕
17	ST 312	BEARING, ball ⊕
18	304 780 R1	RING, snap ⊕
18	31 242 DA	PLATE, bearing (CL-3401-4) 5/16 x 5/8" hex-hd cap SCREW w/lock WASHER (CL-9232) (4)
19	26 039 DA	BUSHING (CL-3110) (2)
20	304 778 R92	SLEEVE ASSY, release ⊕
20	55 229 DBXA	SLEEVE w/FITTING, 138 322 H and BUSHING, 26 039 DA (UCL-1-4840-2) ⊕

⊕ - Used with Clutch Assembly, 55 228 DH.
⊕ - Used with Clutch Assembly, 317 859 R91.

ENGINE OVER-CENTER CLUTCH 13"
(Hand Operated) (Rockford Drilling Machine)
(TD-91) - Continued

Ref. No.	IH Part Number	Description
21	55 228 DH	COVER ASSY, less driven clutch member (UCLA-17-4539) TD9 501 to 67461, also ⊗ (Order 317 859 R91)
		(Composed of -
		1 BEARING ST 312
		1 CAMSHAFT 273 171 R92
		1 CARRIER 55 232 DA
		3 LINK 43 207 D
		1 LOCK 273 263 R1
		2 NUT 103 026
		3 PACKAGE 267 679 R91
		3 PACKAGE 267 680 R91
		3 PIN 103 361
		3 PIN 50 430 D
		1 PLATE 50 433 D
		1 PLATE 273 170 R91
		1 PLATE 31 238 D
		1 PLATE 31 242 DA
		1 RING 55 371 DA
		1 RING 29 780 D
		2 SCREW 61 115 D
		4 SCREW w/WASHER 442 695
		1 SLEEVE 55 229 DBXA
		3 SPRING 268 613 R1
		6 WASHER 615 029 R1
		6 WASHER 267 689 R1)
		1/2 x 1-3/8" hex-hd cap SCREW (6)
		1/2" lock WASHER (6)
21	317 859 R91	COVER ASSY (UCLA-2-10783) TD-9 67462 up except ⊗
		(Composed of -
		1 BEARING 972 386 R91
		1 CAMSHAFT 304 781 R91
		1 CAMBLOCK 267 665 R91
		1 CARRIER 317 860 R91
		3 LINK 304 782 R1
		1 LOCK 264 679 R1
		2 NUT 103 026
		3 PIN 304 783 R2
		3 PIN 304 784 R2
		3 PIN 304 786 R1
		1 PLATE 304 776 R1
		1 PLATE 304 777 R1
		1 PLATE 31 238 D
		1 RING 55 371 DA
		1 RING 29 780 D
		1 RING 304 780 R1
		2 SCREW 61 115 D
		1 SLEEVE 304 778 R92
		6 SPRING 304 785 R1
		3 STOP 304 787 R91
		6 WASHER 615 029 R1
		6 WASHER 267 689 R1)
21A	138 322 H	FITTING, lubrication (Alemite 1610B) (used with sleeve) (optional with 271 409)
21A	271 409	FITTING, lubrication (Lincoln 105000) (used with sleeve) (optional with 138 322 H)
22	304 776 R1	PLATE, back ⊗
22	50 433 D	PLATE, back (CL-4539) ⊕
23	304 777 R1	PLATE, pressure ⊗
23	273 170 R91	PLATE w/CAMBLOCK SET, 267 665 R91, pressure (UCL-1-4349) ⊕
24	303 766 R91	MEMBER w/two sintered metal FACING, 303 767 R1 and twenty-four RIVET, 250 263 R1 (UCL-50-4541)
24	324 999 R91	MEMBER w/eight cerametallic FACINGS and four RIVETS (UCL-71-4541)
24A	303 767 R1	FACING, sintered metal clutch (CL-10963-63) (2)
24B	250 263 R1	RIVET, tubular clutch facing (CL-4049-5) (24)
25	54 969 D	BOLT, engine clutch coupling dowel (3) 7/16NF NUT (3) 7/16" lock WASHER (3)
26	259 689 R11	PACKAGE, engine clutch brake disc facing field service (consists of one FACING and six RIVETS, 21 407 H)

ENGINE OVER-CENTER CLUTCH 13"
(Hand Operated) (Rockford Drilling Machine)
(TD-91) - Continued

Ref. No.	IH Part Number	Description
26	324 998 R91	PACKAGE, cerametallic facing (UCL-11415-90-CR2) (Consists of two FACINGS and one RIVET, 338 360 R1) (four used with one driven member)
27	191 759	ADAPTER, engine clutch release bearing lubrication fitting angle elbow (Alemite 44701) (optional with 145 017 H)
27	145 017 H	ADAPTER, engine clutch release bearing lubrication fitting angle elbow (Lincoln 20029) (optional with 191 759)
28	273 347	FITTING, engine clutch release bearing lubrication (Alemite 1669B)
29	264 679 R1	LOCK, adjusting ring ⊗
29	273 263 R1	LOCK, adjusting ring (CL-9014) ⊕
30	103 026	NUT, 3/8NF (2)
31	61 115 D	SCREW, adjusting lock (CL-5315) (2)
32	304 782 R1	LINK, connecting (3) ⊗
32	43 207 D	LINK, connecting (CL-4339-1) (3) ⊕
33	304 784 R2	PIN, connecting link (short) (3) ⊗
33	267 680 R91	PACKAGE, connecting link pin (short) field service (consists of PIN, WASHER, 615 029 R1 and WASHER, 267 689 R1) (UCL-9315C) (3)⊕
	615 029 R1	WASHER, 3/8 x 3/4" x No. 16 ga. fl. stl (CL-4347) (6)
	267 689 R1	WASHER (CL-9318) (6)
34	271 284	FITTING, camshaft lubrication (Alemite 1612B) (optional with 271 416) (3)
34	271 416	FITTING, camshaft lubrication (Lincoln 105300) (optional with 271 284) (3)
35	304 781 R91	CAMSHAFT ASSY ⊗
35	273 171 R92	CAMSHAFT SET w/three FITTINGS, 271 284 (UCL-1-4337-16-53) ⊕
36	304 783 R2	PIN, connecting link long (3) ⊗
36	267 679 R91	PACKAGE, connecting link pin (long) field service (consists of PIN, WASHER, 615 029 R1 and WASHER, 267 689 R1) (UCL-9314C) (3) ⊕
37	268 613 R1	SPRING, return (CL-9552) (3) ⊕
38	50 430 D	PIN, return spring (CL-4350) (3) 1/16 x 1/2" cotter PIN (CL-3923) (3) ⊕
39	267 665 R91	CAMBLOCK SET (consists of six CAM-BLOCKS, and six SCREWS, 261 106 R1) (UCL-3478-2-S6) ⊗
	261 106 R1	SCREW, 1/4 x 1/2" hex-hd cap (C-3921) (6) 1/4" external-tooth lock WASHER (6)
40	277 421 R91	MEMBER, w/bi-metallic FACING (riveted) driven clutch (UCL-44-4541)
41	277 422 R91	PACKAGE, clutch facing field service (bi-metallic) (consists of two clutch FACING and twenty-six RIVET, 250 263 R1) (UCL-7797-13-CR2)
42	250 263 R1	RIVET, clutch facing (CL-1011-5) (26)
43	277 675 R91	MEMBER w/asbestos metallic FACING (bonded) driven clutch (UCL-45-4541)
44	277 676 R91	PACKAGE, clutch facing field service (asbestos metallic) (consists of two clutch FACING and twenty-six RIVET, 50 413 D (UCL-7796-14-CR2)
45	273 258 R91	MEMBER, driven clutch w/cerametallic FACING (UCL-22-4541)
	50 413 D	RIVET, clutch facing (CL-1011-5) (26)
	304 785 R1	SPRING, return (6) ⊗
	304 786 R1	PIN, return spring retaining (3) ⊗
	304 787 R91	STOP ASSY, return spring (3) ⊗

⊗ - TD-91 67466, 67467, 67474, 67475, 67480, 67481, 67486, 67487, 67493, 67497, and 67498.

⊕ - Used with Clutch Assembly, 55 228 DH.

⊗ - Used with Clutch Assembly, 317 859 R91.

MAIN FRAME

REF. NO.	PART NUMBER	DESCRIPTION

MAIN FRAME CHANNELS, TRACK FRAME GUIDE, ROLLERS AND BRACKETS
(T-61 and TD-61) (Not Rigid Track Frame)

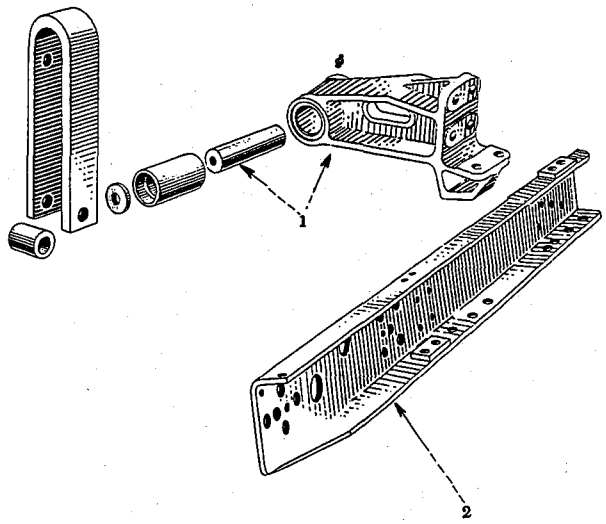

1	275 313 R11	BRACKET w/SHAFT, 51 395 D, LH track frame guide roller (not wide tread) 1/2NF NUT (6) 1/2NF x 1-1/2" hex-hd. cap SCREW (6) 1/2" lock WASHER (6)
1	275 315 R11	BRACKET w/SHAFT, 51 395 D, LH track frame guide roller (wide tread) 1/2NF NUT (6) 1/2NF x 1-1/2" hex-hd. cap SCREW (6) 1/2" lock WASHER (6)
2	277 770 R1	CHANNEL, LH main frame side (will work for 275 307 R11) 1/2 x 1-1/4" hex-hd. cap SCREW (4) 3/4 x 1-3/4" hex-hd. cap SCREW (7) 1/2" lock WASHER (4)
3	277 771 R1	CHANNEL, RH main frame side (will work for 275 308 R11) 1/2 x 1-1/4" hex-hd. cap SCREW (4) 3/4 x 1-3/4" hex-hd. cap SCREW (7) 1/2" lock WASHER (4)
4	46 337 D	DOWEL, main frame side channel (4)
5	45 791 D	SPACER, track frame guide (2)
6	51 396 D	GUIDE, track frame (2) 3/4NF x 1-3/4" hex-hd. cap SCREW (2) 3/4 x 4-1/2" hex-hd. cap SCREW (2)
7	45 794 D	WASHER, track frame guide roller retaining (2) 1/2NF x 1" hex-hd. cap SCREW (2) 1/2" lock WASHER (2)

-145-

MAIN FRAME

REF. NO.	PART NUMBER	DESCRIPTION

MAIN FRAME CHANNELS, TRACK FRAME GUIDE, ROLLERS AND BRACKETS
(T-61 and TD-61) (Not Rigid Track Frame) - Continued

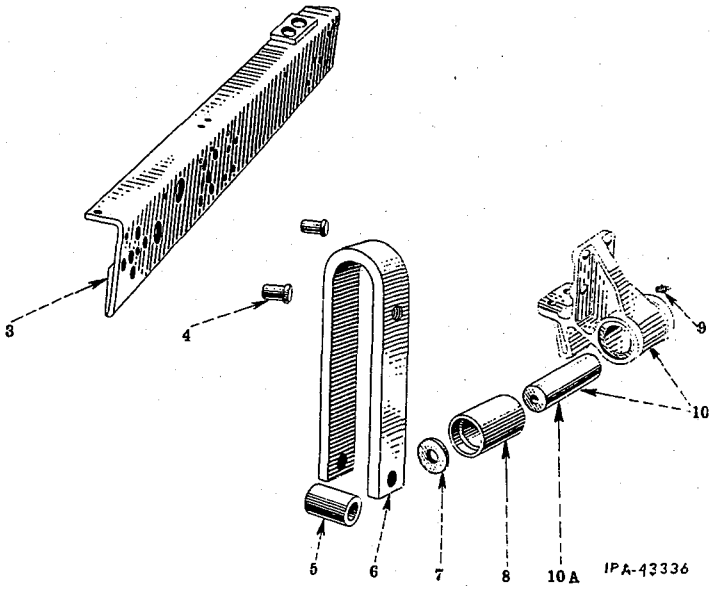

8	51 394 D	ROLLER, track frame guide (2)
9	271 409	FITTING, track frame guide roller lubrication (lincoln 105000) (optional with 138 322 H) (2)
9	138 322 H	FITTING, track frame guide roller lubrication (Alemite 1610B) (optional with 271 409) (2)
10	275 314 R11	BRACKET w/SHAFT, 51 395 D, RH track frame guide roller (not wide tread) 1/2NF NUT (6) 1/2NF x 1-1/2" hex-hd. cap SCREW (6) 1/2" lock WASHER (6)
10	275 316 R11	BRACKET w/SHAFT, 51 395 D, RH track frame guide roller (wide tread) 1/2NF NUT (6) 1/2NF x 1-1/2" hex-hd. cap SCREW (6) 1/2" lock WASHER (6)
10A	51 395 D	SHAFT, track frame guide roller (2)

REF. NO.	PART NUMBER	DESCRIPTION

MAIN FRAME CHANNELS, TRACK FRAME GUIDE, ROLLERS AND BRACKETS
(TD-91) (Not Rigid Track Frame)

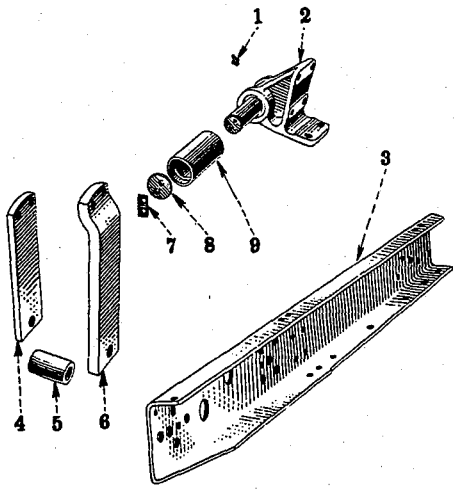

1	271 409	FITTING, track frame guide roller lubrication (Lincoln 105000) (optional with 138 322 H) (2)
1	138 322 H	FITTING, track frame guide roller lubrication (Alemite 1610-B) (optional with 271 409) (2)
2	275 186 R11	BRACKET w/SHAFT, 47 978 D, LH track frame guide roller (wide tread) 5/8NF NUT (6) 5/8NF x 1-3/4" hex-hd. cap SCREW (2) 5/8NF x 2" hex-hd. cap SCREW (4)
2	275 184 R11	BRACKET w/SHAFT, 47 978 D, LH track frame guide roller (not wide tread) 5/8NF NUT (6) 5/8NF x 1-3/4" hex-hd. cap SCREW (6)
3	275 175 R11	CHANNEL, LH main frame side 5/8 x 1-1/2" hex-hd. cap SCREW (4) 3/4 x 1-3/4" hex-hd. cap SCREW (4) 7/8 x 2" hex-hd. cap SCREW (4)
4	65 868 D	PLATE, inner frame guide (2) 5/8NF x 2" hex-hd. cap SCREW (4) 5/8" lock WASHER (4)
5	49 587 D	SPACER, track frame guide (2)
6	65 869 D	PLATE, outer track frame guide (2) 5/8 x 1-3/4" hex-hd. cap SCREW (4) 7/8 x 4-3/4" hex-hd. cap SCREW (2)
7	47 991 D	LOCK, track frame guide roller retaining washer (2)
8	47 990 D	WASHER, track frame guide roller retaining (2) 3/8NF x 3/4" hex-hd. cap SCREW (4)
9	47 979 D	ROLLER, track frame guide (2)
10	275 176 R11	CHANNEL, RH main frame side 5/8 x 1-1/2" hex-hd. cap SCREW (4) 3/4 x 1-3/4" hex-hd. cap SCREW (4) 7/8 x 2" hex-hd. cap SCREW (4)
11	48 074 D	DOWEL, main frame side channel (4)

REF. NO.	PART NUMBER	DESCRIPTION

MAIN FRAME CHANNELS, TRACK FRAME GUIDE, ROLLERS AND BRACKETS
(TD-91) (Not rigid Track Frame) - Continued

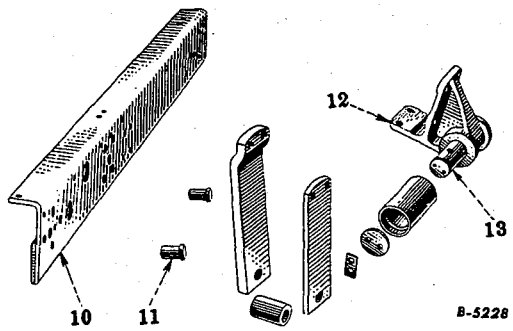

12	275 187 R11	BRACKET w/SHAFT, 47 978 D, RH track frame guide roller (wide tread) 5/8NF NUT (6) 5/8NF x 1-3/4" hex-hd. cap SCREW (2) 5/8NF x 2" hex-hd. cap SCREW (4)
12	275 185 R11	BRACKET w/SHAFT, 47 978 D, RH track frame guide roller (not wide tread) 5/8NF NUT (6) 5/8NF x 1-3/4" hex-hd. cap SCREW (6)
13	47 978 D	SHAFT, track frame guide roller (2)

MAIN FRAME AND COVERS
(T-61 and TD-61)

-147-

MAIN FRAME

MAIN FRAME AND COVERS
(T-61 and TD-61) - Continued

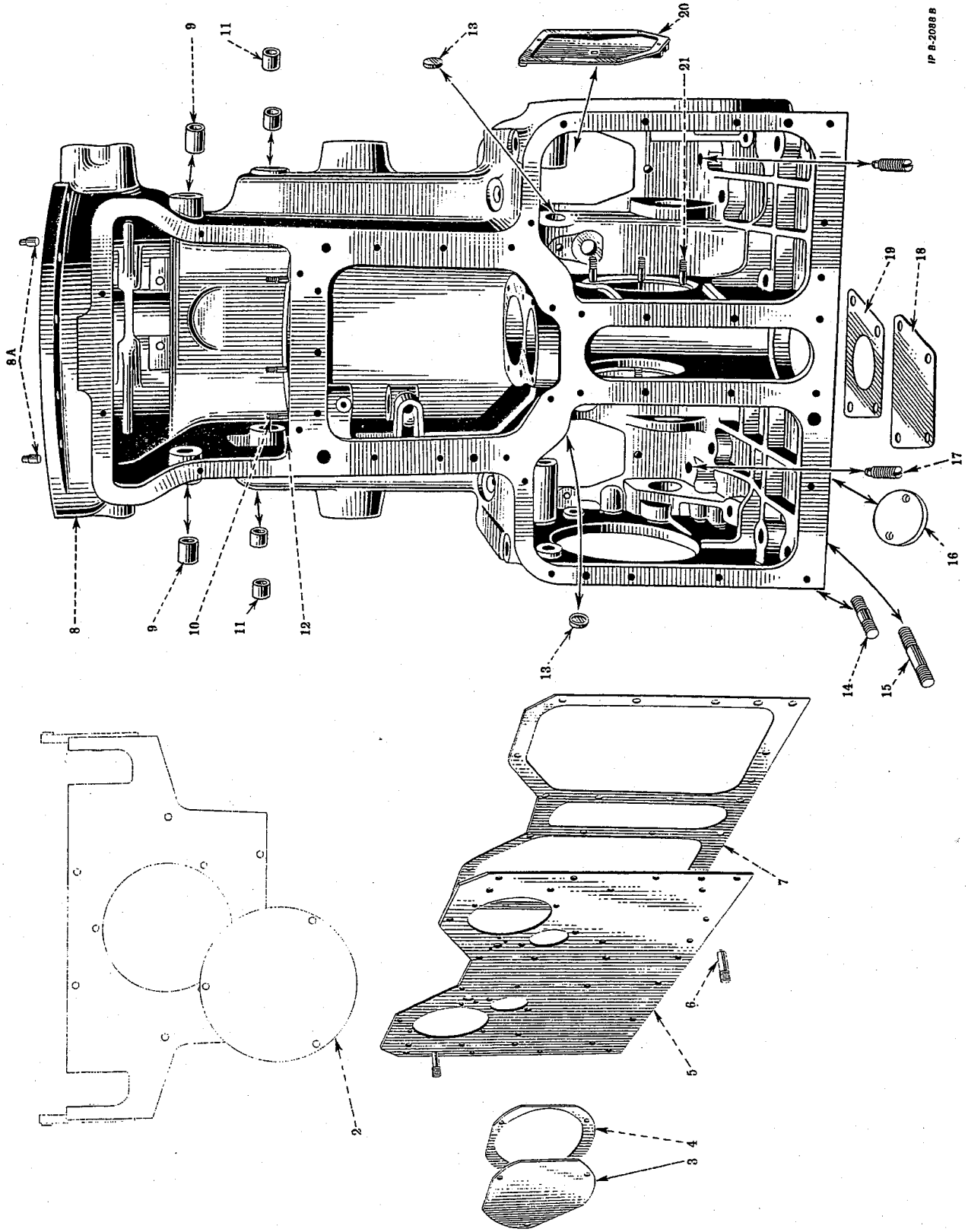

MAIN FRAME

REF. NO.	PART NUMBER	DESCRIPTION
		MAIN FRAME AND COVERS (T-61 and TD-61) - Continued
1	275 309 R11	COVER, engine clutch 3/8" NUT (2) 3/8 x 3/4" hex-hd. cap SCREW (6) 3/8 x 1-1/2" hex-hd. cap SCREW (2) 3/8" lock WASHER (8)
2	46 304 D	COVER, engine clutch inspection 3/8 x 5/8" hex-hd. cap SCREW (3) 3/8" lock WASHER (3)
3	53 559 D	COVER, steering clutch inspection (2) 5/16NF x 1/2" hex-hd. cap SCREW (6) 5/16" lock WASHER (6)
4	53 714 D	GASKET, steering clutch inspection cover (2)
5	281 649 R1	COVER, main frame 7/16 x 1" hex-hd. cap SCREW (20) 7/16" lock WASHER (20) 1/2 x 1" hex-hd. cap SCREW (for plugging TD-61 bottom support mounting holes) (2) 17/32 x 1-1/16" x No. 13 ga. flat WASHER (T-61) (for plugging (TD-61) bottom support mounting holes) (2) 1/2" lock WASHER (T-61) (for mounting TD-61 bottom support mounting holes) (2)
6	18 585 DA	PIN, main frame cover dowel (2)
7	51 609	GASKET, main frame cover
8	8 223 DEX	FRAME ASSEMBLY, main (for tractors not equipped with two-speed reverse transmission attachment) (composed of - 2 BUSHING 45 120 D 4 BUSHING 46 332 D 1 CAP 6 236 D 2 COVER 275 066 R1 2 CORK 104 941 6 CORK 106 613 1 CORK 106 622 4 CORK 117 926 §1 FRAME 2 PIN 266 079 R1 2 PLUG 41 600 D 1 PLUG 144 001 2 PLUG 144 016 1 PLUG 254 817 R92 1 PLUG 271 552 6 SCREW 272 529 R1 4 STUD 53 711 D 4 STUD 57 382 D 2 STUD 57 383 D)
	104 941	CORK, 1/2 x 11/16" dia. x 7/8" long (xx quality, size 5) (2)
	106 622	CORK, 5/8 x 13/16" dia. x 1" long (xx quality, size 7)
	106 613	CORK, 3/4 x 15/16" dia. x 1-1/8" long (xx quality, size 9) (6)
	117 926	CORK, 7/8 x 1-1/8" dia. x 1-1/4" long (xx quality, size 12) (4)
	144 016	PLUG, 1" socket-hd. pipe (2)
	144 001	PLUG, 1-1/4" socket-hd. pipe

MAIN FRAME

REF. NO.	PART NUMBER	DESCRIPTION
		MAIN FRAME AND COVERS (T-61 and TD-61) - Continued
8	269 638 R31	FRAME ASSEMBLY, main (for tractors equipped with two-speed reverse transmission attachment) (Composed of - 6 BOLT 272 529 R1 2 BUSHING 45 120 D 4 BUSHING 46 332 D 1 CAP 6 236 D 2 CORK 104 941 1 CORK 106 622 7 CORK 106 613 4 CORK 117 926 §1 FRAME 2 PIN 266 079 R1 2 PLUG 144 016 1 PLUG 271 647 R1 1 PLUG 254 817 R92 2 PLUG 41 600 D 4 STUD 53 711 D 4 STUD 57 382 D 2 STUD 57 383 D)
	104 941	CORK, No. 5, 11/16" dia. x 7/8" long (2)
	106 613	CORK, No. 9, 15/16" dia. x 1-1/8" long (7)
	106 622	CORK. No. 7, 13/16" dia. x 1" long
	117 926	CORK, No. 12, 1-1/8" dia. x 1-1/4" long (4)
	271 647 R1	PLUG, 1-1/4" sq-socket pipe
	144 016	PLUG, 1" sq-socket pipe (2)
8A	266 079 R1	PIN, rear engine support dowel (2)
9	45 120 D	BUSHING, engine clutch release shaft (2)
10	53 711 D	STUD, transmission end cover (4)
11	46 332 D	BUSHING, steering brake operating shaft (4)
13	41 600 D	PLUG, steering brake pivot shaft cup (2)
14	57 383 D	STUD, upper drawbar guide bracket (2)
15	57 382 D	STUD, lower drawbar guide bracket (4) 3/4NF NUT (4)
16	275 066 R1	COVER w/CLAMP and BOLT, steering clutch lubricating port (2) 1/2 x 1" hex-hd. cap SCREW (4) 1/2" lock WASHER (4)
17	271 552	PLUG, set screw hole deflection (5/8 x 3/4" hex-hd.) (See NOTE)
18	48 072 D	COVER, power take-off (not belt pulley) 5/8 x 1" hex-hd. cap SCREW (4)
19	48 073 D	GASKET, power take-off cover (not belt pulley)
20	51 401 D	COVER, steering brake inspection (2) 3/8 x 1" hex-hd. cap SCREW (10) 3/8" lock WASHER (10)
	6 236 D	CAP, equalizer spring pivot shaft (shown with equalizer spring)
	276 611 R1	GASKET, engine clutch inspection cover
	282 818 R1	GASKET, steering clutch lubrication port cover
	254 817 R92	PLUG w/PIN, 13 044 R1, engine clutch compartment drain
	13 044 R1	PIN, 3/16 x 3/4" cotter
	272 529 R1	SCREW, equalizer spring pivot shaft cap (6)

§ - Not Furnished Separately
NOTE - For tractors not equipped with two-speed Reverse Transmission Attachment

MAIN FRAME AND COVERS
(TD-91)

-149-
MAIN FRAME

MAIN FRAME AND COVERS
(TD-91) - Continued

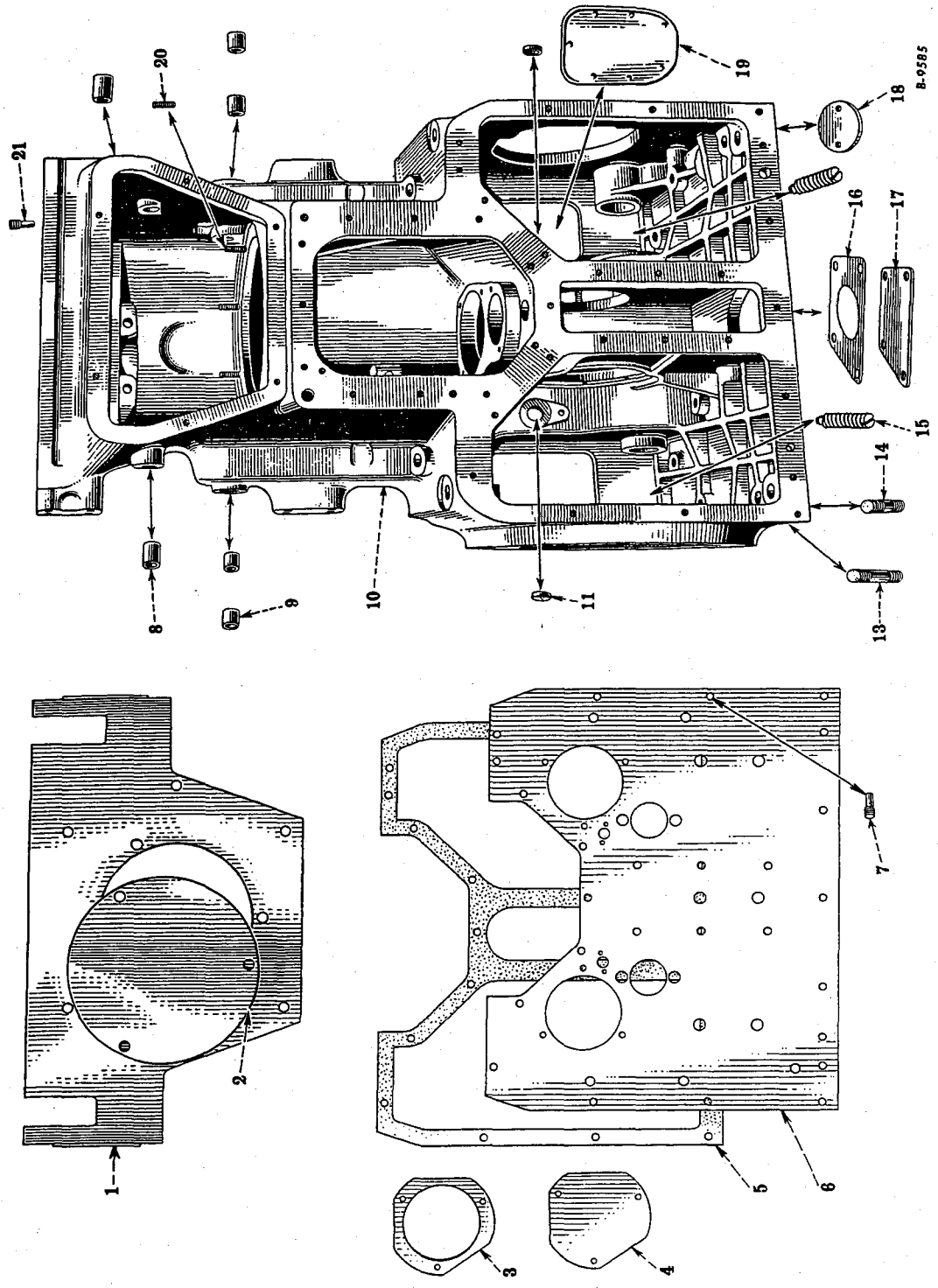

PRINTED IN UNITED STATES OF AMERICA

MAIN FRAME

REF. NO.	PART NUMBER	DESCRIPTION
		MAIN FRAME AND COVERS (TD-91) - Continued
1	275 200 R11	COVER, engine clutch 3/8 x 3/4" hex-hd. cap SCREW (6) 3/8 x 1-3/4" hex-hd. cap SCREW (2) 3/8" lock WASHER (8)
2	46 304 D	COVER, engine clutch inspection 3/8 x 5/8" hex-hd. cap SCREW (3) 3/8" lock WASHER (3)
3	53 714 D	GASKET, steering clutch inspection cover (2)
4	53 559 D	COVER, steering clutch inspection (2) 5/16NF x 1/2" hex-hd. cap SCREW (6) 5/16" lock WASHER (6)
5	52 256 D	GASKET, main frame cover
6	280 706 R11	COVER, main frame 7/16 x 1" hex-hd. cap SCREW (16) 7/16" lock WASHER (16)
7	18 585 DA	PIN, main frame cover dowel (2)
8	45 120 D	BUSHING, engine clutch release shaft (2)
9	46 332 D	BUSHING, steering brake operating shaft (4)
10	8 514 DEX	FRAME ASSEMBLY, main (Composed of - 6 BOLT 272 527 R1 2 BUSHING 45 120 D 4 BUSHING 46 332 D 1 CAP 6 612 D 2 CORK 104 941 7 CORK 106 613 4 CORK 117 928 2 COVER 275 066 R1 §1 FRAME 2 PIN 266 079 R1 2 PLUG 144 016 1 PLUG 271 647 R1 1 PLUG 254 817 R92 2 PLUG 41 600 D 1 PLUG 271 601 4 STUD 53 715 D 4 STUD 57 382 D 2 STUD 47 383 D) 104 941 CORK, No. 5, 11/16" dia. x 7/8" long (2) 106 613 CORK, No. 9, 15/16" dia. x 1-1/8" long (7) 117 928 CORK, No. 14, 1-1/4" dia. x 1-1/4" long (4) 144 016 PLUG, 1" sq-socket pipe (2)
11	41 600 D	PLUG, steering brake pivot shaft cup (2)
12		Reference 12 not used
13	57 382 D	STUD, lower drawbar guide bracket (4)
14	57 383 D	STUD, upper drawbar guide bracket (2)
15	46 809 D	SCREW, track frame pivot shaft set (See NOTE) (2) 5/8" jam NUT (2)
16	48 073 D	GASKET, power take-off cover
17	48 072 D	COVER, power take-off 5/8 x 1" hex-hd. cap SCREW (4)
18	275 066 R1	COVER, steering clutch lubrication port (2) 1/2 x 1" hex-hd. cap SCREW (4) 1/2" lock WASHER (4)
19	48 044 D	COVER, steering brake inspection (2) 3/8 x 1" hex-hd. cap SCREW (14) 3/8" lock WASHER (14)

-150-

MAIN FRAME

REF. NO.	PART NUMBER	DESCRIPTION
		MAIN FRAME AND COVERS (TD-91) - Continued
20	53 715 D	STUD, transmission end cover (4)
21	266 079 R1	PIN, rear engine support dowel (2)
	272 527 R1	BOLT, equalizer spring pivot shaft cap (also listed with equalizer spring) (6)
	6 612 D	CAP, equalizer spring pivot shaft (also listed and illustrated with equalizer spring)
	276 611 R1	GASKET, engine clutch inspection cover
	13 044 R1	PIN, 3/16 x 3/4" cotter
	254 817 R92	PLUG w/PIN, 13 044 R1, 1/2" engine clutch compartment drain
	271 601	PLUG, drive bevel gear deflector set screw hole
	271 647 R1	PLUG, drain (main frame) (will work for 144 001)
	282 818 R1	GASKET, steering clutch lubrication port cover (2)

NOTE - Also listed under heading "Track Frame Pivot Shaft".

§ - Not Furnished Separately

MAIN FRAME

REF. NO.	PART NUMBER	DESCRIPTION

EQUALIZER SPRING (Not Heavy Duty)
(T-61 and TD-61)

-151-

MAIN FRAME

REF. NO.	PART NUMBER	DESCRIPTION

EQUALIZER SPRING (Not Heavy Duty)
(T-61 and TD-61) - Continued

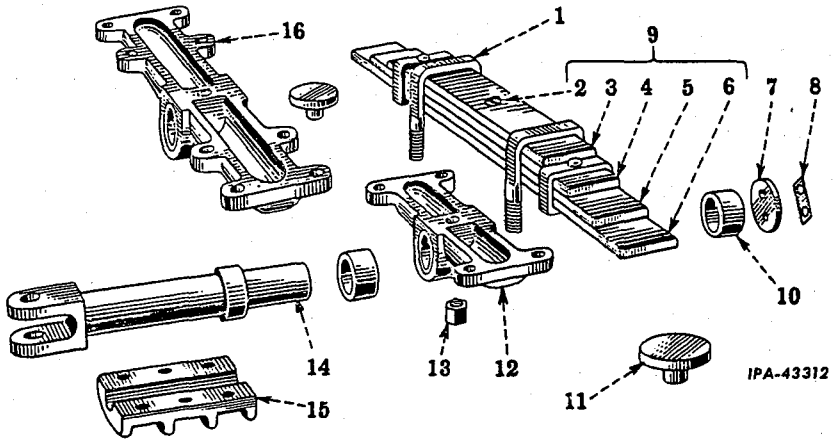

1	45 297 D	CLIP, equalizer spring (four required on wide tread) (2)
2	55 310 DX	BOLT, equalizer spring center 7/16NF NUT (light)
3	45 305 D	LEAF, equalizer spring, No. 4 (not wide tread)
3	45 309 D	LEAF, equalizer spring, No. 4 (wide tread)
4	45 304 D	LEAF, equalizer spring, No. 3 (not wide tread)
4	45 308 D	LEAF, equalizer spring, No. 3 (wide tread)
5	45 303 D	LEAF, equalizer spring, No. 2 (not wide tread)
5	45 307 D	LEAF, equalizer spring, No. 2 (wide tread)
6	45 302 D	LEAF, equalizer spring, No. 1 (not wide tread)
6	45 306 D	LEAF, equalizer spring, No. 1 (wide tread)
7	67 115 D	WASHER, equalizer spring retaining 1/2NF x 1-1/4" hex-hd. cap SCREW (2)
8	49 862 DA	LOCK, equalizer spring retainer washer cap screw
9	45 300 D	SPRING, equalizer (4 leaves) (not wide tread) (Composed of - 1 BOLT 55 310 DX; 1 LEAF 45 302 D; 1 LEAF 45 303 D; 1 LEAF 45 304 D; 1 LEAF 45 305 D)
9	45 301 D	SPRING, equalizer (4 leaves) (wide tread) (Composed of - 1 BOLT 55 310 DX; 1 LEAF 45 306 D; 1 LEAF 45 307 D; 1 LEAF 45 308 D; 1 LEAF 45 309 D)
10	45 294 DA	BUSHING, equalizer spring saddle (2)
11	6 219 DA	PAD, equalizer spring guide (2)
12	45 298 DAXA	SADDLE w/BUSHING, 45 294 DA, equalizer spring (not wide tread)
13	45 293 D	NUT, equalizer spring clip (eight required on wide tread) (2)
14	254 920 R1	SHAFT, equalizer spring pivot
15	6 236 D 272 529 R1	CAP, equalizer spring pivot shaft SCREW, 3/4 x 2" hex-hd. cap (6)
16	45 299 DAXA	SADDLE w/BUSHING, 45 294 DA, equalizer spring (wide tread)

PRINTED IN UNITED STATES OF AMERICA

REF. NO.	PART NUMBER	DESCRIPTION

EQUALIZER SPRING (Not Heavy Duty)
(TD-91) (Standard Steel Spring Co.)

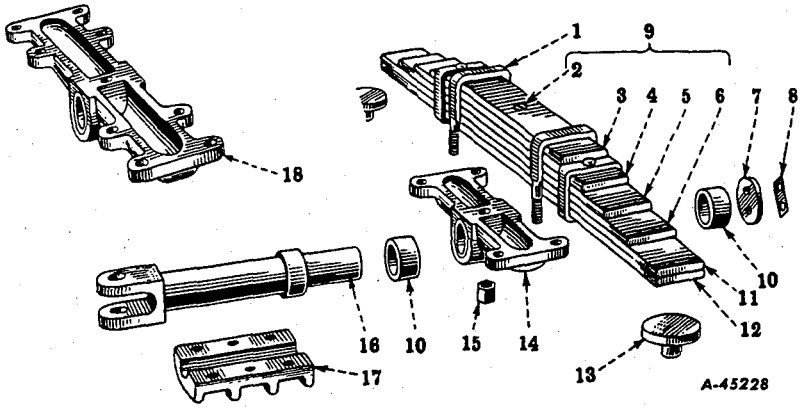

1	53 898 DA	CLIP, equalizer spring (four required on wide tread) (2)
2	55 311 DX	BOLT w/NUT, center equalizer spring (35375)
3	54 029 D	LEAF, equalizer spring, No. 6 (wide tread) (51-79A-PLT-No. 6)
3	54 027 D	LEAF, equalizer spring, No. 6 (not wide tread) (51-78A-PLT-No. 6)
4	47 605 D	LEAF w/clinch CLIPS, equalizer spring No. 5 (not wide tread) (51-78A-PLT-No. 5)
4	47 610 D	LEAF w/clinch CLIPS, equalizer spring No. 5 (wide tread) (51-79A-PLT-No. 5)
5	47 609 D	LEAF, equalizer spring, No. 4 (wide tread) (51-79A-PLT-No. 4)
5	47 604 D	LEAF, equalizer spring, No. 4 (not wide tread) (51-78A-PLT-No. 4)
6	47 603 D	LEAF, equalizer spring, No. 3 (not wide tread) (51-78A-PLT-No. 3)
6	47 608 D	LEAF, equalizer spring, No. 3 (wide tread) (51-79A-PLT-No. 3)
7	254 923 R1	WASHER, equalizer spring retainer 1/2NF x 1-1/4" hex-hd. cap SCREW (2)
8	254 922 R1	LOCK, bolt, equalizer spring retaining washer
9	53 896 D	SPRING, equalizer (wide tread) (51-79A) (Composed of - 1 BOLT 55 311 DX; 1 LEAF 47 607 D; 1 LEAF 47 608 D; 1 LEAF 47 609 D; 1 LEAF 54 028 D; 1 LEAF 54 029 D; 1 LEAF w/CLIPS 47 610 D)
9	53 897 D	SPRING, equalizer (not wide tread) (51-78A) (Composed of - 1 BOLT 55 311 DX; 1 LEAF 47 602 D; 1 LEAF 47 603 D; 1 LEAF 47 604 D; 1 LEAF 54 026 D; 1 LEAF 54 027 D; 1 LEAF w/CLIPS 47 605 D)

-152-

MAIN FRAME

REF. NO.	PART NUMBER	DESCRIPTION

EQUALIZER SPRING (Not Heavy Duty)
(TD-91) (Standard Steel Spring Co.) - Continued

10	47 594 DA	BUSHING, equalizer spring saddle (2)
11	54 026 D	LEAF, equalizer spring, No. 2 (not wide tread) (51-78A-PLT-No. 2)
11	54 028 D	LEAF, equalizer spring, No. 2 (wide tread) (51-79A-PLT-No. 2)
12	47 607 D	LEAF, equalizer spring, No. 1 (wide tread) (51-79A-PLT-No. 1)
12	47 602 D	LEAF, equalizer spring, No. 1 (not wide tread) (51-78A-PLT-No. 1)
13	8 493 DA	PAD, equalizer spring guide (2)
14	47 598 DAXA	SADDLE w/two BUSHINGS, 47 594 DA, equalizer spring (not wide tread)
15	41 842 D	NUT, equalizer spring clip (eight required on wide tread) (4)
16	254 921 R1	SHAFT, equalizer spring pivot
17	6 612 D	CAP, equalizer spring pivot shaft
18	47 599 DAXA	SADDLE w/two BUSHINGS, 47 594 DA, equalizer spring (wide tread)
	272 527 R1	BOLT, equalizer spring pivot shaft cap (6)
		NUT, 1/2" spring center bolt (37105)

MAIN FRAME

REF. NO.	PART NUMBER	DESCRIPTION

EQUALIZER SPRING (Heavy Duty)
(T-61, TD-61 and TD-91)

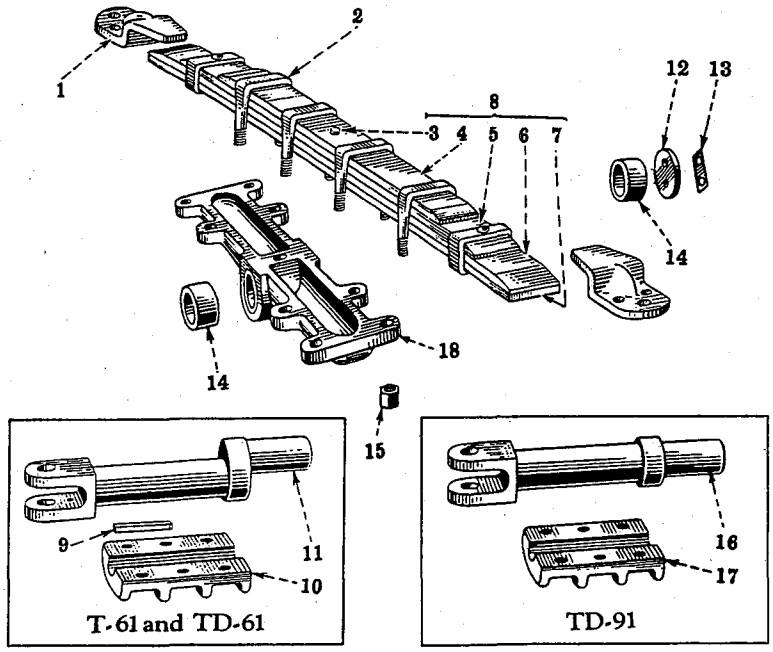

IPA-10750B

Ⓧ - KEY TO UNITS

A -	66 987 D	ATTACHMENT, heavy duty equalizer spring (wide tread) (T-61 and TD-61) (See NOTE)
B -	255 332 R91	ATTACHMENT, heavy duty equalizer spring (wide tread) (TD-91) (See NOTE)

Ⓧ - Letters of these units correspond with those shown following the description of the parts in the list below and identifies the unit for which the part is used. Items without letters after the description indicates the part is used for all units.

1	9 581 D	BRACKET, LH equalizer spring rebound (Unit A) 1/2 x 1-1/4" hex-hd. cap SCREW (3) 1/2" lock WASHER (3)
1	9 582 D	BRACKET, RH equalizer spring rebound (Unit A) 1/2 x 1-1/4" hex-hd. cap SCREW (3) 1/2" lock WASHER (3)
1	255 317 R1	BRACKET, equalizer spring rebound (2 for Unit B) 5/8 x 1-1/4" hex-hd. cap SCREW (2) 5/8 x 2" hex-hd. cap SCREW (4)
2	66 551 D	CLIP, equalizer spring (4 for Unit A)
2	53 898 DA	CLIP, equalizer spring (4 for Unit B)
3	55 311 DX	BOLT w/NUT, equalizer spring (Unit A)
3	60 476 DX	BOLT w/NUT, equalizer spring (Unit B) 1/2NF NUT
4	67 001 D	LEAF, equalizer spring No. 4 (Unit A)
4	255 327 R1	LEAF, equalizer spring No. 4 (Unit B)
5	67 000 D	LEAF, equalizer spring No. 3 (Unit A)
5	252 304 R1	LEAF, equalizer spring No. 3 (Unit B)
6	66 999 D	LEAF, equalizer spring No. 2 (Unit A)
6	255 303 R1	LEAF, equalizer spring No. 2 (Unit B)
7	66 998 D	LEAF, equalizer spring No. 1 (Unit A)
7	255 302 R1	LEAF, equalizer spring No. 1 (Unit B)

MAIN FRAME

REF. NO.	PART NUMBER	DESCRIPTION

EQUALIZER SPRING (Heavy Duty)
(T-61, TD-61 and TD-91) - Continued

8	66 997 D	SPRING ASSEMBLY, heavy-duty equalizer (Unit A) (Composed of - 1 BOLT w/NUT 55 311 DX 1 LEAF 66 998 D 1 LEAF 66 999 D 1 LEAF 67 000 D 1 LEAF 67 001 D)
8	255 316 R91	SPRING ASSEMBLY, heavy-duty equalizer (Unit B) (Composed of - 1 BOLT w/NUT 60 476 DX 1 LEAF 252 304 R1 1 LEAF 255 302 R1 1 LEAF 255 303 R1 1 LEAF 255 327 R1)
9	66 553 D	KEY, equalizer spring pivot shaft (Unit A)
10	9 580 D	CAP, equalizer spring pivot shaft (Unit A) 3/4 x 1-3/4" hex-hd. cap SCREW (6)
11	66 552 D	SHAFT, equalizer spring pivot (Unit A)
12	67 115 D	WASHER, equalizer spring retaining ⊛ (T-61 and TD-61) 1/2NF x 1-1/4" hex-hd. cap SCREW (2)
12	254 923 R1	WASHER, equalizer spring retaining ⊛ (TD-91) 1/2NF x 1-1/4" hex-hd. cap SCREW (2)

NOTE - Factory Application - Order on Machine Order Form.
Field Application - Order through Regular Service Parts Channels.

⊛ - Not furnished with ATTACHMENTS, 66 987 D and 255 332 R91. Also illustrated with "Equalizer Spring (Not Heavy Duty)".

REF. NO.	PART NUMBER	DESCRIPTION
		EQUALIZER SPRING (Heavy Duty) (T-61, TD-61 and TD-91) - Continued
13	49 862 DA	LOCK, equalizer spring retainer washer cap screw (*) (T-61 and TD-61)
13	254 922 R1	LOCK, equalizer spring retainer washer cap screw (*) (TD-91)
14	45 294 DA	BUSHING, equalizer spring saddle (2) (*) (T-61 and TD-61)
14	47 594 DA	BUSHING, equalizer spring saddle (2) (*) (TD-91)
15	45 293 D	NUT, equalizer spring clip (8) (*) (T-61 and TD-61)
15	41 842 D	NUT, equalizer spring clip (8) (*) (TD-91)
16	254 921 R1	SHAFT, equalizer spring pivot (*) (TD-91)
17	6 612 D	CAP, equalizer spring pivot shaft (*) (TD-91)
18	45 299 DAXA	SADDLE w/BUSHING, 45 294 DA, equalizer spring (*) (T-61 and TD-61)
18	45 599 DAXA	SADDLE w/BUSHING, 47 594 DA, equalizer spring (*) (TD-91)

(*) - Not furnished with ATTACHMENTS, 66 987 D and 255 332 R91. Also illustrated with "Equalizer Spring (Not Heavy Duty)".

-154-

MAIN FRAME

REF. NO.	PART NUMBER	DESCRIPTION

TRANSMISSION GEAR SHIFTER MECHANISM
(T-61 and TD-61)

-155-

TRANSMISSION

REF. NO.	PART NUMBER	DESCRIPTION

TRANSMISSION GEAR SHIFTER MECHANISM
(T-61 and TD-61) - Continued

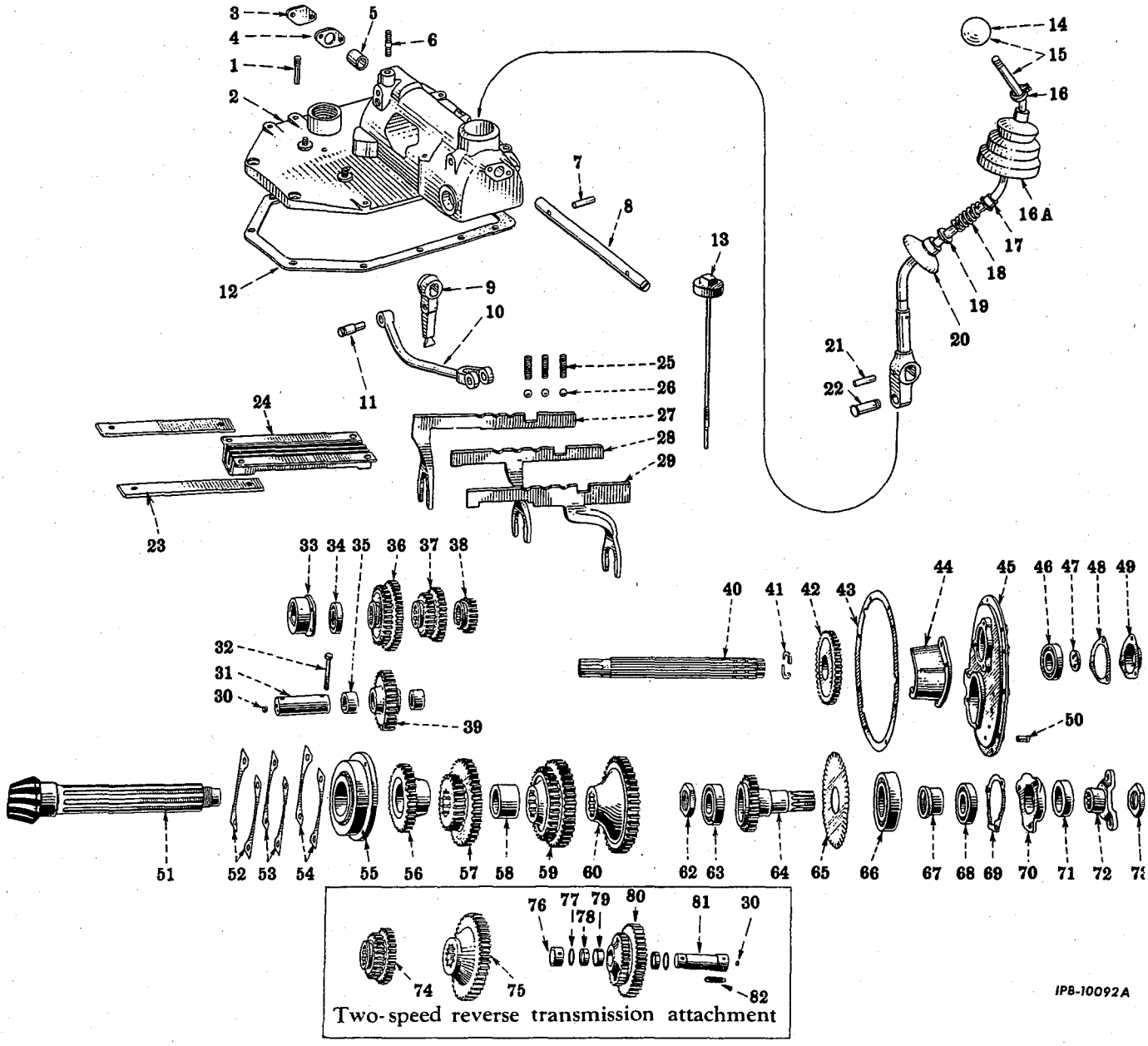

Two-speed reverse transmission attachment

1	18 585 DA	DOWEL, transmission gear shifter housing main frame (2)
2	275 396 R11	HOUSING ASSEMBLY, transmission gear shifter (not used with odometer attachment) (together w/three 172 529 and three 172 574 will work for 275 949 R91)
		(Composed of -
		2 ANCHOR 50 826 D
		1 BUSHING 276 156 R1
		§1 HOUSING
		1 STUD 41 633 D)
	172 529	PLUG, 5/8" expansion (3)
	172 574	PLUG, 1-1/2" expansion (3)
		7/16 x 1-1/2" hex-soc-hd. cap SCREW (3)
		7/16 x 1-1/4" hex-hd. cap SCREW (4)
		7/16 x 1-1/2" hex-hd. cap SCREW (2)
		7/16 x 3" hex-hd. cap SCREW (2)
		7/16" lock WASHER (11)
3	275 226 R1	COVER, transmission gear shift lever shaft end (2)
		3/8 x 5/8" hex-hd. cap SCREW (4)
		3/8" lock WASHER (4)

§ - Not Furnished Separately

PRINTED IN UNITED STATES OF AMERICA

REF. NO.	PART NUMBER	DESCRIPTION
		TRANSMISSION GEAR SHIFTER MECHANISM (T-61 and TD-61) - Continued
4	275 225 R1	GASKET, transmission gear shift lever shaft end cover (2)
5	276 156 R1	BUSHING, shifter lever shaft
6	41 633 D	STUD, platform
7	277 037 R1	PIN, transmission gear shift hand lever upper (will work for 577 139 R1)
8	275 744 R2	SHAFT, transmission gear shift lever upper
9	275 747 R12	LEVER w/PIN, 275 748 R2, transmission gear shift
10	275 745 R11	LINK w/CLEVIS, transmission gear shift lever selector
11	275 748 R2	PIN, transmission gear shift lever lower
	148 152	SPRING, 1/2" retainer
12	53 461 D	GASKET, transmission gear shifter housing
13	53 685 DA	ROD w/PLUG and SHIELD, transmission oil level
14	264 055 R2	BALL, transmission gear shift hand lever
15	275 739 R12	LEVER, transmission gear shift hand (together w/BALL, 264 055 R2 will work for 275 741 R91)
16	64 604 D	CLAMP, transmission gear shift hand lever boot
16A	275 742 R1	BOOT, transmission gear shift hand lever
17	11 373 D	STOP, transmission gear shift hand lever swivel shield spring upper
		3/16 x 1-1/4" rd-hd. RIVET (iron)
18	29 547 D	SPRING, transmission gear shift hand lever swivel shield
19	17 700 D	STOP, transmission gear shift hand lever swivel shield spring lower
20	275 743 R1	SHIELD, transmission gear shift hand lever swivel
21	277 037 R1	PIN, transmission gear shift hand lever upper (will work for 577 139 R1)
22	275 746 R1	PIN, transmission gear shift hand lever lower
	148 152	SPRING, 1/2" retainer
23	62 778 D	LOCK, gear shifter rail guide support bolt (2)
24	69 474 DA	GUIDE, gear shifter rail
		3/8 x 3/4" hex-hd. cap SCREW (4)
25	64 163 D	SPRING, gear shifter rail poppet (3)
26	D 2 616	POPPET, gear shifter rail (grade 3, 1/2" steel ball) (optional with 13 722 D) (3)
26	13 722 D	POPPET, gear shifter rail (grade 4, 1/2" steel ball) (optional with D 2 616) (3)
27	53 470 DA	RAIL and FORK, fourth and fifth gear shifter
28	53 471 DA	RAIL and FORK, second and third gear shifter
29	69 477 DA	RAIL and FORK, low and reverse gear shifter
	50 826 D	ANCHOR, steering clutch release lever return spring (2)

REF. NO.	PART NUMBER	DESCRIPTION
		TRANSMISSION (Five Speeds Forward, One Reverse) (T-61 and TD-61)
30	45 361 D	PLUG, transmission reverse idler gear shaft
31	48 388 DX	SHAFT w/PLUG, 45 361 D, transmission reverse idler gear
32	56 453 D	BOLT, transmission reverse idler gear shaft
		3/8NF NUT (slotted)
		3/32 x 3/4" cotter PIN
33	6 241 DB	CAGE, transmission spline shaft bearing rear
		3/8 x 3/4" hex-hd. cap SCREW (2)
		3/8" lock WASHER (2)
34	272 477 R91	BEARING, transmission spline shaft rear
35	45 348 DR	BUSHING, transmission reverse idler gear (2)
36	271 769 R1	GEAR, transmission fourth and fifth speed sliding (31 and 36 T)
37	51 966 DA	GEAR, transmission second and third speed sliding (23 and 28 T) (not used with two speed reverse transmission attachment)
38	258 624 R2	GEAR, transmission first and reverse speed sliding (18 T)
39	45 372 DAX	GEAR, transmission reverse idler (28 T) (not used with two speed reverse transmission attachment)
40	258 623 R2	SHAFT, transmission spline
41	53 604 DX	COLLAR, transmission drive gear split (two halves)
42	51 965 DA	GEAR, transmission driven (37 T)
43	45 440 D	GASKET, transmission end cover
44	8 779 D	POCKET, transmission end cover oil
		5/16 x 7/8" hex-hd. cap SCREW (3)
		5/16" lock WASHER (3)
45	6 250 DC	COVER, transmission end
		3/8NF NUT (4)
		3/8 x 1-1/4" hex-hd. cap SCREW (4)
		3/8" lock WASHER (8)
46	ST 216	BEARING, transmission spline shaft front ball
47	45 357 D	WASHER, transmission spline shaft front bearing retainer
		7/16NF x 1" hex-hd. cap SCREW (2)
		7/16" lock WASHER (2)
48	45 358 D	GASKET, transmission spline shaft front bearing retainer
49	45 360 D	RETAINER, transmission spline shaft front bearing
		3/8 x 3/4" hex-hd. cap SCREW (3)
		3/8" lock WASHER (3)
50	45 442 D	PIN, transmission end cover dowel
51	271 763 R1	PINION and SHAFT, bevel (10 T)
51	271 753 R91	PINION and SHAFT, bevel 271 763 R1, w/GEAR, 271 754 R1 (matched pair) (See NOTE)
		NOTE - Also listed and illustrated under heading STEERING SYSTEM - "Drive Bevel Gear".

TRANSMISSION

REF. NO.	PART NUMBER	DESCRIPTION
		TRANSMISSION (Five Speeds Forward, One Reverse) (T-61 and TD-61) - Continued
52	53 609 D	SHIM, bevel pinion and shaft rear bearing cage (heavy) (X)
53	53 610 D	SHIM, bevel pinion and shaft rear bearing cage (medium) (X)
54	53 611 D	SHIM, bevel pinion and shaft rear bearing cage (light) (X)
54	250 308 R1	SHIM, bevel pinion and shaft rear bearing cage (extra light) (X)
55	271 766 R91	BEARING, tapered roller bevel pinion and shaft rear 1/2 x 1-3/8" hex-hd. cap SCREW (4) 1/2" lock WASHER (4)
56	271 768 R1	GEAR, transmission fourth speed (28 T)
57	51 962 DA	GEAR, transmission second and fifth speed (23 and 36 T)
58	51 954 D	SPACER, bevel pinion shaft long
59	51 969 DA	GEAR, transmission third and reverse speed (31 and 36 T) (not used with two speed reverse transmission attachment)
60	51 968 DA	GEAR, transmission first speed (41 T)
62	279 732 R1	NUT, bevel pinion shaft lock (will work for 45 363 D)
63	53 298 D	BEARING, cylindrical roller bevel pinion shaft front
64	262 748 R2	SHAFT and GEAR, transmission driving (22 T)
65	262 749 R1	SLINGER, transmission oil
66	272 479 R91	BEARING, cylindrical roller transmission driving shaft rear
67	6 249 D	SPACER, transmission driving shaft bearing
68	ST 329	BEARING, transmission driving shaft front ball
69	45 439 D	GASKET, transmission driving shaft bearing retainer
70	6 248 DA	RETAINER, transmission driving shaft front bearing (will work for 52 480 D) 3/8 x 1" hex-hd. cap SCREW (3) 3/8" lock WASHER (3)
71	179 753 R91	OIL SEAL, transmission driving shaft
72	259 691 R1	COUPLING, transmission drive
73	262 750 R1	NUT, transmission drive coupling retainer
74	269 639 R1	GEAR, transmission second and high reverse sliding (*)
75	260 148 R1	GEAR, reversed speed (36 T) (*)
76	279 429 R1	SLEEVE, transmission reverse idler gear shaft (*)
77	279 427 R1	RING, high and low reverse idler gear snap (*) (2)

TRANSMISSION

REF. NO.	PART NUMBER	DESCRIPTION
		TRANSMISSION (Five Speeds Forward, One Reverse) (T-61 and TD-61) - Continued
78	279 466 R91	BEARING, high and low reverse idler gear (*) (2)
79	279 426 R1	SPACER, high and low (*)
80	269 640 R11	GEAR, transmission high and low reverse idler (order 279 436 R91) (20 and 28 T) (*)
80	279 425 R1	GEAR, transmission high and low reverse idler (20 and 28 T) (*)
81	279 428 R11	SHAFT w/PLUG, 45 361 D, transmission reverse idler gear (*)
82	279 430 R91	STRAINER, transmission reverse idler oil (*)
	275 798 R92	ATTACHMENT, two speed reverse transmission Field Application Only - Order through Regular Service Parts Channels. (Composed of - 2 BEARING 279 466 R91 1 DECAL 275 008 R1 1 GASKET 45 358 D 1 GASKET 45 440 D 1 GASKET 53 461 D 1 GEAR 260 148 R1 1 GEAR 269 639 R1 1 GEAR 279 425 R1 1 PLUG 45 361 D 2 RING 279 427 R1 1 SHAFT 279 428 R11 1 SLEEVE 279 429 R1 1 SPACER 279 426 R1 1 STRAINER 279 430 R91)
	279 436 R91	PACKAGE, high and low reverse idler gear field service (service for 269 640 R11) (*) (Composed of the following parts - 2 BEARING 279 466 R91 1 GEAR 279 425 R1 2 RING 279 427 R1 1 SHAFT 279 428 R11 1 SLEEVE 279 429 R1 1 SPACER 279 426 R1 1 STRAINER 279 430 R91)
	2 750 005 R1	DECALCOMANIA, shifting diagram
	2 750 008 R1	DECALCOMANIA, shifting diagram (*)

(*) - Used only on tractors equipped with "two speed reverse transmission attachment.
X - As Required

REF. NO.	PART NUMBER	DESCRIPTION

TRANSMISSION GEAR SHIFTER MECHANISM
(TD-91)

-158-

TRANSMISSION

REF. NO.	PART NUMBER	DESCRIPTION

TRANSMISSION GEAR SHIFTER MECHANISM
(TD-91) - Continued

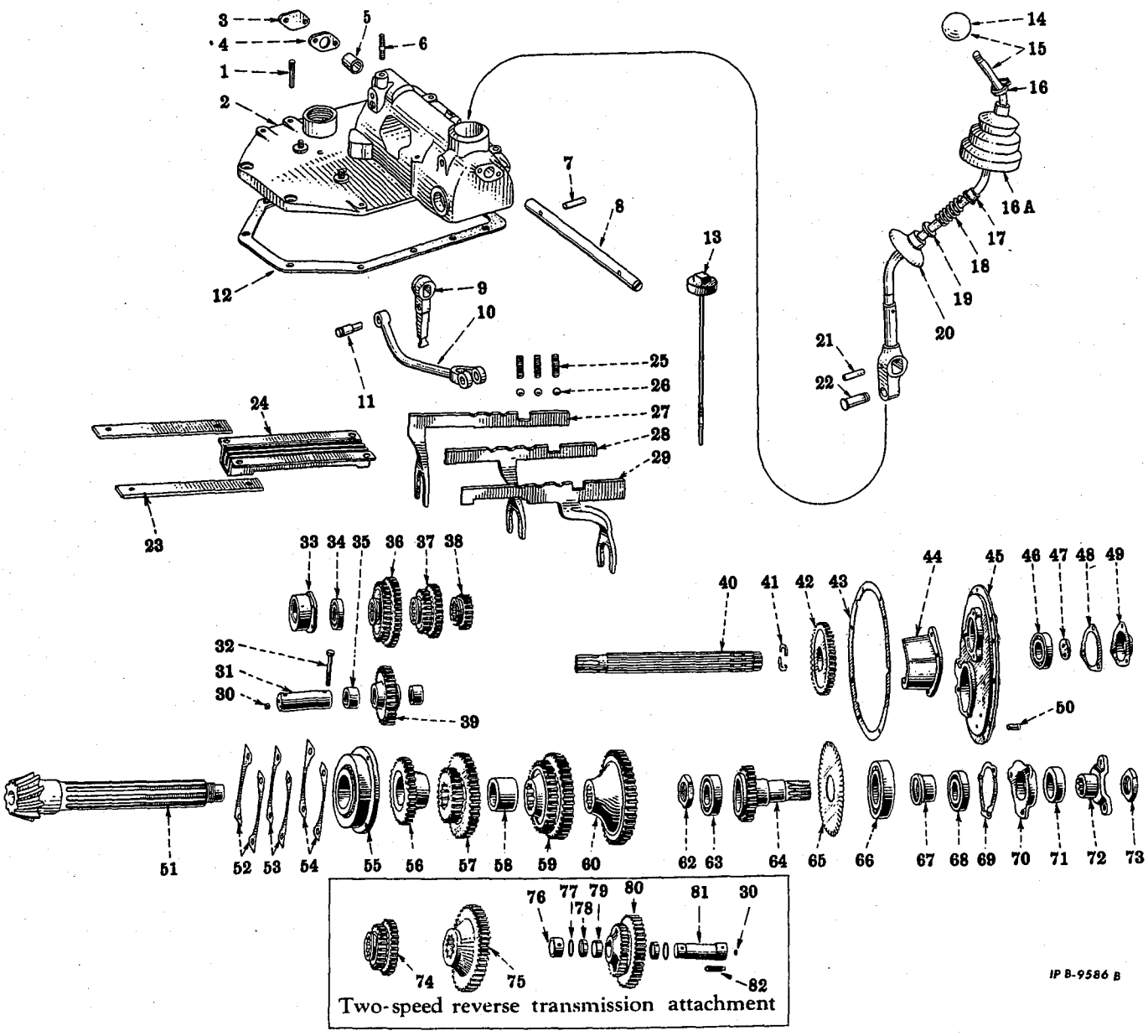

REF. NO.	PART NUMBER	DESCRIPTION
1	18 585 DA	DOWEL, transmission gear shifter housing main frame (2)
2	275 738 R11	HOUSING ASSEMBLY, transmission gear shifter (not odometer attachment) (together w/four PLUGS, 172 529 and three PLUGS, 172 574 will work for 276 030 R91) (Composed of - 2 ANCHOR 50 826 D 1 BUSHING 276 156 R1 §1 HOUSING 1 STUD 41 633 D) 7/16 x 1-1/4" hex-hd. cap SCREW (4) 7/16 x 1-1/2" hex-hd. cap SCREW (5) 7/16 x 3" hex-hd. cap SCREW (2) 7/16" lock WASHER (11)
3	275 226 R1	COVER, transmission gear shift lever shaft end (2) 3/8 x 5/8" hex-hd. cap SCREW (4) 3/8" lock WASHER (4)
4	275 225 R1	GASKET, transmission gear shift lever shaft end cover (2)

§ - Not Furnished Separately

PRINTED IN UNITED STATES OF AMERICA

REF. NO.	PART NUMBER	DESCRIPTION
		TRANSMISSION GEAR SHIFTER MECHANISM (TD-91) - Continued
5	276 156 R1	BUSHING, shifter lever shaft
6	41 633 D	STUD, platform
7	277 037 R1	PIN, transmission gear shift hand lever upper (will work for 577 139 R1)
8	275 744 R1	SHAFT, transmission gear shift lever upper
9	275 747 R12	LEVER w/PIN, 275 748 R2, transmission gear shift
10	275 745 R11	LINK w/CLEVIS, transmission gear shift selector
11	275 748 R2	PIN, transmission gear shift lever lower
	148 152	SPRING, 1/2" retainer
12	53 486 D	GASKET, transmission gear shifter housing
13	53 683 DA	ROD w/PLUG and SHIELD, transmission oil level
14	264 055 R2	BALL, transmission gear shift hand lever
15	275 739 R12	LEVER, transmission gear shift hand (together w/BALL, 264 055 R2 will work for 275 741 R91)
16	64 604 D	CLAMP, transmission gear shift hand lever boot
16A	275 742 R1	BOOT, transmission gear shift hand lever
17	11 373 D	STOP, transmission gear shift hand lever swivel shield spring upper 3/16 x 1-1/4" rd-hd. RIVET (iron)
18	29 547 D	SPRING, transmission gear shift hand lever swivel shield
19	17 700 D	STOP, transmission gear shift hand lever swivel shield spring lower
20	275 743 R1	SHIELD, transmission gear shift hand lever swivel
21	277 037 R1	PIN, transmission gear shift hand lever upper (will work for 577 139 R1)
22	275 746 R1	PIN, transmission gear shift hand lever lower
	148 152	SPRING, 1/2" retainer
23	62 779 D	LOCK, gear shifter rail guide support bolt (2)
24	69 466 DA	GUIDE, gear shifter rail 3/8 x 3/4" hex-hd. cap SCREW (4)
25	64 163 D	SPRING, gear shifter rail poppet (3)
26	D 2 616	POPPET, gear shifter rail (grade 3, 1/2" steel ball) (optional with 13 722 D) (3)
26	13 722 D	POPPET, gear shifter rail (grade 4, 1/2" steel ball) (optional with D 2 616) (3)
27	53 480 DA	RAIL and FORK, fourth and fifth gear shifter
28	53 481 DA	RAIL and FORK, second and third gear shifter
29	69 464 DB	RAIL and FORK, low and reverse gear shifter
	50 826 D	ANCHOR, steering clutch release lever return spring (2)

REF. NO.	PART NUMBER	DESCRIPTION
		TRANSMISSION (Five Speeds Forward, One Reverse) (TD-91)
30	45 361 D	PLUG, transmission reverse idler gear shaft
31	46 905 DX	SHAFT w/PLUG, 45 361 D, transmission reverse idler gear
32	4 457 D	BOLT, transmission reverse idler gear shaft 3/8NF slt-hex. NUT 3/32 x 3/4" cotter PIN
33	6 477 DA	CAGE, transmission spline shaft rear bearing 3/8 x 7/8" hex-hd. cap SCREW (2) 3/8" lock WASHER (2)
34	272 478 R91	BEARING, transmission spline shaft rear
35	46 904 DR	BUSHING, transmission reverse idler gear (2)
36	271 861 R1	GEAR, sliding transmission fourth and fifth speed (33 and 38 T)
37	63 256 DA	GEAR, sliding transmission second and third speed (24 and 29 T) (not used with two speed reverse transmission attachment)
38	258 626 R3	GEAR, transmission first and reverse speed sliding (19 T)
39	52 237 DAX	GEAR, transmission reverse idler (33 T) (not used with two speed reverse transmissi attachment)
40	258 625 R2	SHAFT, transmission spline
41	53 632 DX	COLLAR, transmission driven gear split (two halves)
42	52 211 D	GEAR, transmission driven (39 T)
43	46 918 D	GASKET, transmission end cover
44	8 779 D	POCKET, transmission end cover oil 5/16 x 7/8" hex-hd. cap SCREW (3) 5/16" lock WASHER (3)
45	6 480 DC	COVER, transmission end 7/16NF NUT (4) 7/16 x 1-1/4" hex-hd. cap SCREW (4) 7/16" lock WASHER (8)
46	ST 238	BEARING, transmission spline shaft front
47	45 357 D	WASHER, transmission spline shaft bearing retainer front 7/16 x 1" hex-hd. cap SCREW (2) 7/16" lock WASHER (2)
48	46 913 D	GASKET, transmission spline shaft front bearing retainer
49	46 912 D	RETAINER, transmission spline shaft bearing front 3/8 x 3/4" hex-hd. cap SCREW (3) 3/8" lock WASHER (3)
50	45 132 D	PIN, transmission end cover dowel
51	279 337 R1	PINION and SHAFT, bevel (10 T) (will work for 271 859 R1)
51	279 339 R91	PINION and SHAFT, bevel, 279 337 R1 w/GEAR, 279 338 R1 (matched pair) (will work for 271 858 R91) (See NOTE)
		NOTE - Also listed and illustrated under heading STEERING SYSTEM - "Drive Bevel Gear".

REF. NO.	PART NUMBER	DESCRIPTION
		TRANSMISSION (Five Speeds Forward, One Reverse) (TD-91) - Continued
52	53 635 D	SHIM, bevel pinion and shaft rear bearing cage (heavy) (X)
53	53 636 D	SHIM, bevel pinion and shaft rear bearing cage (medium) (X)
54	53 637 D	SHIM, bevel pinion and shaft rear bearing cage (light) (X)
54	250 307 R1	SHIM, bevel pinion and shaft rear bearing cage (extra light) (X)
55	271 863 R91	BEARING, bevel pinion and shaft rear 1/2 x 1-5/8" hex-hd. cap SCREW (4) 1/2" lock WASHER (4)
56	271 860 R1	GEAR, transmission fourth speed (32 T)
57	52 213 DA	GEAR, transmission second and fifth speed (27 and 41 T)
58	46 859 D	SPACER, bevel pinion shaft
59	63 255 DA	GEAR, transmission third and reverse speed (36 and 41T) (not used with two speed reverse transmission attachment)
60	52 215 DA	GEAR, transmission first speed (46 T)
62	279 733 R1	NUT, bevel pinion and shaft lock (will work for 46 887 D)
63	ST 200	BEARING, bevel pinion shaft front
64	262 751 R2	SHAFT and GEAR, transmission driving (26 T)
65	262 752 R1	SLINGER, transmission oil
66	272 480 R91	BEARING, transmission driving shaft rear
67	6 478 D	SPACER, transmission driving shaft bearing
68	ST 216	BEARING, transmission driving shaft front
69	46 916 D	GASKET, transmission driving shaft bearing retainer front
70	6 479 DB	RETAINER, transmission driving shaft bearing front 3/8 x 1" hex-hd. cap SCREW (3) 3/8" lock WASHER (3)
71	279 749 R91	OIL SEAL, transmission driving shaft
72	52 208 D	COUPLING, transmission drive
73	255 630 R1	NUT, transmission drive coupling retaining
74	260 153 R1	GEAR, transmission second and high reverse sliding (24 and 28 T) (*)
75	260 151 R1	GEAR, transmission high and low reverse speed (41 T) (*)
76	279 433 R1	SLEEVE, reverse idler gear shaft (*)
77	279 427 R1	RING, high and low reverse idler gear snap (*) (2)
78	279 466 R91	BEARING, high and low reverse idler gear (*) (2)

REF. NO.	PART NUMBER	DESCRIPTION
		TRANSMISSION (Five Speeds Forward, One Reverse) (TD-91) - Continued
79	279 432 R1	SPACER, high and low reverse idler gear (*)
80	260 152 R11	GEAR, transmission high and low reverse idler (order 279 437 R91) (*)
80	279 431 R1	GEAR, transmission high and low reverse idler (24 and 33 T) (*)
81	279 435 R11	SHAFT w/PLUG, 45 361 D, reverse idler gear (*)
82	279 434 R91	STRAINER, oil reverse idler (*)
	275 772 R92	ATTACHMENT, two speed reverse transmission Factory Application - Order on Machine Order Form. Field Application - Order through Regular Service Parts Channels. (Composed of - 1 DECAL 2 750 008 R1 2 BEARING 279 466 R91 1 GASKET 46 913 D 1 GASKET 46 918 D 1 GASKET 53 486 D 1 GEAR 260 151 R1 1 GEAR 279 431 R1 1 GEAR 260 153 R1 2 RING 279 427 R1 1 SHAFT 279 435 R11 1 SLEEVE 279 433 R1 1 SPACER 279 432 R1 1 STRAINER 279 434 R91)
	2 750 005 R1	DECALCOMANIA, shifting diagram
	2 750 008 R1	DECALCOMANIA, shifting diagram (*)
	279 437 R91	PACKAGE, high and low reverse idler gear field service (service for 260 152 R11) (*) (Composed of the following parts - 2 BEARING 279 466 R91 1 GEAR 279 431 R1 2 RING 279 427 R1 1 SHAFT 279 435 R11 1 SLEEVE 279 433 R1 1 SPACER 279 432 R1 1 STRAINER 279 434 R91)
	175 529	PLUG, 5/8" expansion (4)
	172 574	PLUG, 1-1/2" expansion (3)

(*) - Used only on tractors equipped with "two speed reverse transmission attachment."
X - As Required

STEERING SYSTEM

REF. NO.	PART NUMBER	DESCRIPTION

STEERING BRAKES AND CONTROL
(T-61 and TD-61)

-161-

STEERING SYSTEM

REF. NO.	PART NUMBER	DESCRIPTION

STEERING BRAKES AND CONTROL
(T-61 and TD-61) - Continued

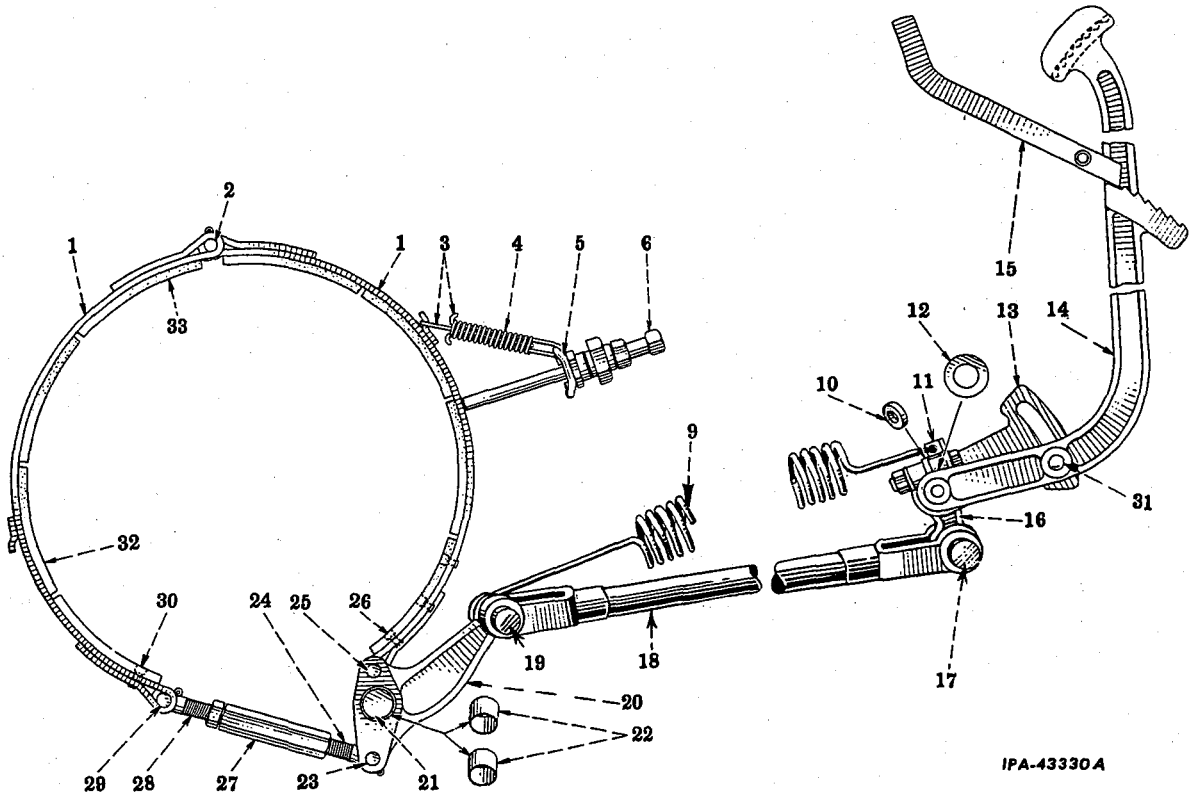

1	274 969 R91	BAND w/LINING, 274 972 R1, four LINING, 274 971 R1, four RIVETS, 268 725 R1 and sixteen RIVETS, 268 724 R1, steering brake (4)
2	274 169 R1	PIN, steering brake band joint (2) 1/8 x 1-1/8" cotter PIN (2)
3	269 178 R1	HOOK, steering brake band anchor spring (4)
4	269 177 R1	SPRING, steering brake band anchor (2)
5	43 664 DC	ANCHOR, steering brake anchor spring (2) 1" NUT (2)
6	53 505 D	SCREW, steering brake band set (2) 5/8" NUT (2)
9	53 495 D	SPRING, steering brake rod return (2)
10	20 841 D	KEY, steering brake lever (2)
11	53 497 D	ANCHOR, steering brake rod return spring (2
12	41 519 D	SEAL, steering brake pedal dirt (2)
13	53 503 DA	SHAFT and adjuster, LH steering brake pedal
13	53 504 DA	SHAFT and adjuster, RH steering brake pedal
14	275 317 R1	PEDAL, LH steering brake 1/2NF x 1-1/2" hex-hd. cap SCREW 1/2NF x 2-3/4" hex-hd. cap SCREW 1/2" lock WASHER (2)
14	275 318 R1	PEDAL, RH steering brake 1/2NF x 1-1/2" hex-hd. cap SCREW 1/2NF x 2-3/4" hex-hd. cap SCREW 1/2" lock WASHER (2)
15	275 182 R91	PAWL, LH steering brake ratchet 1/8 x 5/8" cotter PIN
15	275 183 R91	PAWL, RH steering brake ratchet
16	8 444 DA	LEVER, steering brake (2) 1/2NF x 2-1/4" hex-hd. cap SCREW (2) 1/2NF NUT (2) 1/2" lock WASHER (2)
17		PIN, 1/2 x 1-27/64" end (steering brake rod) (short) (2) 1/8 x 3/4" cotter PIN (2)
18	265 043 R11	ROD, steering brake (2)
19	275 734 R1 148 150	PIN, steering brake rod end (long) (2) SPRING, 3/8" groove dia. retainer (2)
20	274 968 R11	LEVER w/two BUSHING, 46 023 D, steering brake pivot (2)
21	48 045 D	SHAFT, steering brake pivot (2)
22	46 023 D	BUSHING, steering brake pivot lever (4)
23	274 169 R1	PIN, steering brake band turnbuckle eye (short) (2) 1/8 x 1-1/8" cotter PIN (2)
24	274 168 R1	EYE, steering brake band turnbuckle (LH thread) (2)
25	274 169 R1	PIN, steering brake band pivot joint (2)
26	268 724 R1	RIVET, steering brake band lining (short) (64)
27	59 311 D	TURNBUCKLE, steering brake band (2)

PRINTED IN UNITED STATES OF AMERICA

STEERING SYSTEM

REF. NO.	PART NUMBER	DESCRIPTION
		STEERING BRACKES AND CONTROL (T-61 and TD-61) - Continued
28	274 170 R1	EYE, steering brake band turnbuckle (RH thread) (2) 5/8NF NUT (2)
29	274 169 R1	PIN, steering brake band joint (long) (2) 1/8 x 1-1/8" cotter PIN (2)
30	268 725 R1	RIVET, steering brake band lining (long) (16)
31	46 025 DA	STUD, steering brake pivot shaft (2)

STEERING BRAKES AND CONTROL
(TD-91)

-162-

STEERING SYSTEM

REF. NO.	PART NUMBER	DESCRIPTION
		STEERING BRAKES AND CONTROL (T-61 and TD-61) - Continued
32	274 971 R1	LINING, steering brake band (front) (12)
33	274 972 R1	LINING, steering brake band (rear) (4)
	18 275 R91	FITTING, steering brake pedal shaft lubrication (Alemite No. 1623-B) (2)
	53 514 DA	LOCK, steering brake pedal adjuster (2)
	28 422 D	SPACER, steering brake rod return spring (2)
	41 509 D	WASHER, steering brake rod return spring (2)

STEERING BRAKES AND CONTROL
(TD-91) - Continued

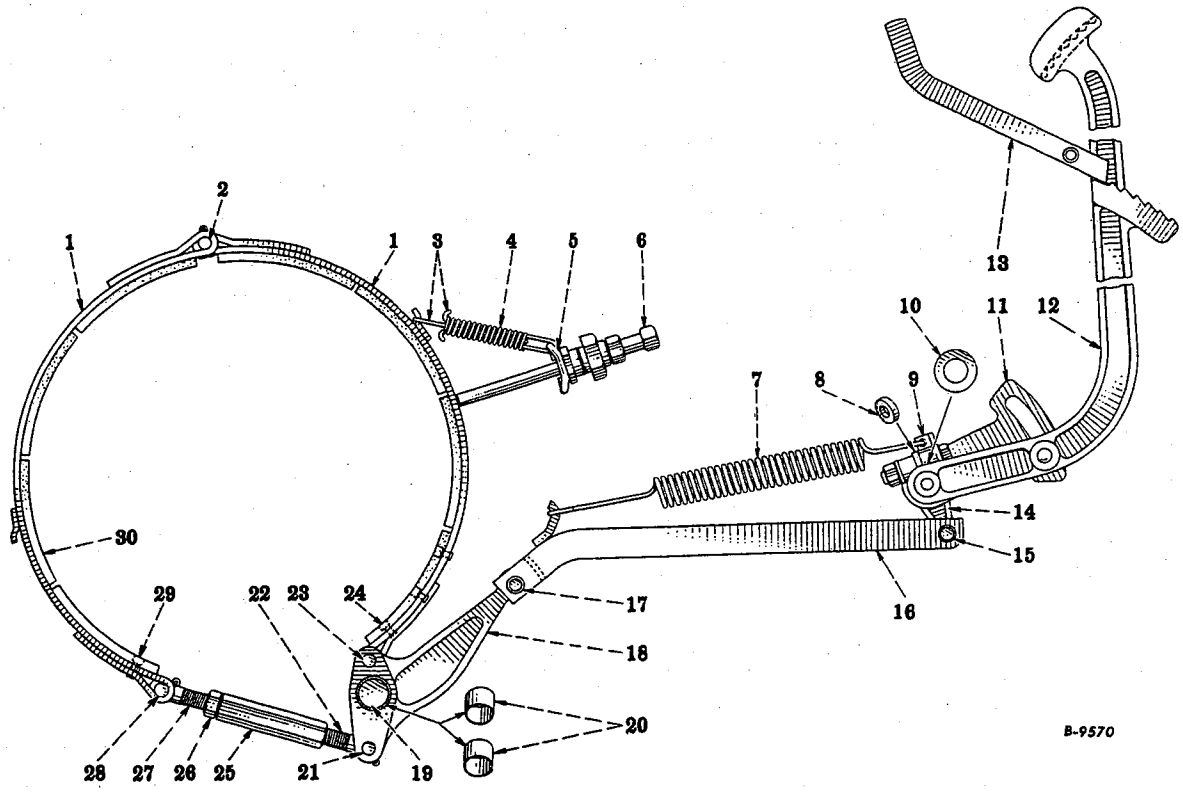

1	274 160 R91	BAND w/four LININGS, 274 163 R1, twenty-two RIVETS, 269 164 R1 and two RIVETS, 274 164 R1, steering brake (4)
2	274 165 R1	PIN, steering brake band joint (2) 1/8 x 1-1/8" cotter PIN (2)
3	269 178 R1	HOOK, steering brake band anchor spring (4)
4	269 177 R1	SPRING, steering brake band anchor (2)
5	43 664 DC	ANCHOR, steering brake return spring (2) 1" iam NUT (2)
6	53 490 D	SCREW, steering brake band set (2) 5/8" NUT (2)
7	53 495 D	SPRING, steering brake rod return (2)
8	20 841 D	KEY, steering brake lever (2)
9	53 497 D	ANCHOR, steering brake rod return spring (2)
10	41 519 D	SEAL, steering brake pedal shaft dirt (2)
11	53 503 DA	SHAFT and ADJUSTER, LH steering brake pedal
11	53 504 DA	SHAFT and ADJUSTER, RH steering brake pedal
12	275 179 R1	PEDAL, LH steering brake
12	275 180 R1	PEDAL, RH steering brake 1/2NF x 1-1/2" hex-hd. cap SCREW 1/2NF x 2-3/4" hex-hd. cap SCREW 1/2" lock WASHER (2)
13	275 182 R91	PAWL, LH steering brake ratchet
13	275 183 R19	PAWL, RH steering brake ratchet 1/8 x 5/8" cotter PIN

PRINTED IN UNITED STATES OF AMERICA

STEERING SYSTEM

REF. NO.	PART NUMBER	DESCRIPTION
		STEERING BRAKES AND CONTROL (TD-91) - Continued
14	8 444 DA	LEVER, steering brake (2) 1/2 x 2-1/4" hex-hd. cap SCREW (2) 1/2NF NUT (2) 1/2" lock WASHER (2)
15		PIN, 1/2 x 1-27/64" end (steering brake rod) (short) (2) 1/8 x 3/4" cotter PIN (2)
16	264 830 R21	ROD, steering brake (2)
17	275 734 R1 148 150	PIN, steering brake rod end (long) (2) SPRING, retainer (3/8" groove) (2)
18	274 167 R11	LEVER w/two BSUHINGS, 46 023 D, steering brake pivot (2)
19	274 698 R1	SHAFT, steering brake pivot (2)
20	46 023 D	BUSHING, steering brake pivot lever (4)
21	274 169 R1	PIN, steering brake band turnbuckle eye (short) (2) 1/8 x 1-1/8" cotter PIN (2)
22	274 168 R1	EYE, steering brake band turnbuckle (LH thread) (2)

STEERING CLUTCH CONTROLS (T-61 and TD-61)

STEERING SYSTEM

REF. NO.	PART NUMBER	DESCRIPTION
		STEERING BRAKES AND CONTROLS (TD-91) - Continued
23	274 165 R1	PIN, steering brake band pivot joint (2) 1/8 x 1-1/8" cotter PIN (2)
24	269 164 R1	RIVET, steering brake band (short) (88)
25	59 311 D	TURNBUCKLE, steering brake band (2)
26		Follows reference No. 27
27	274 170 R1	EYE, steering brake band turnbuckle (RH thread) (2) 5/8NF NUT (2)
28	274 165 R1	PIN, steering brake band turnbuckle eye (long) (2) 1/8 x 1-1/8" cotter PIN (2)
29	274 164 R1	RIVET, steering brake band (long) (8)
30	274 163 R1	LINING, steering brake band (16)
	18 275 R91	FITTING, steering brake pedal shaft lubrication (Alemite 1623-B) (2)
	53 514 DA	LOCK, steering brake pedal adjuster (2)
	274 699 R1	SPACER, steering brake pivot lever (2)
	277 209 R1	STUD, steering brake pivot shaft (will work for 46 025 D) (2) 1/2" lock WASHER (2)

STEERING CLUTCH CONTROLS (T-61 and TD-61) - Continued

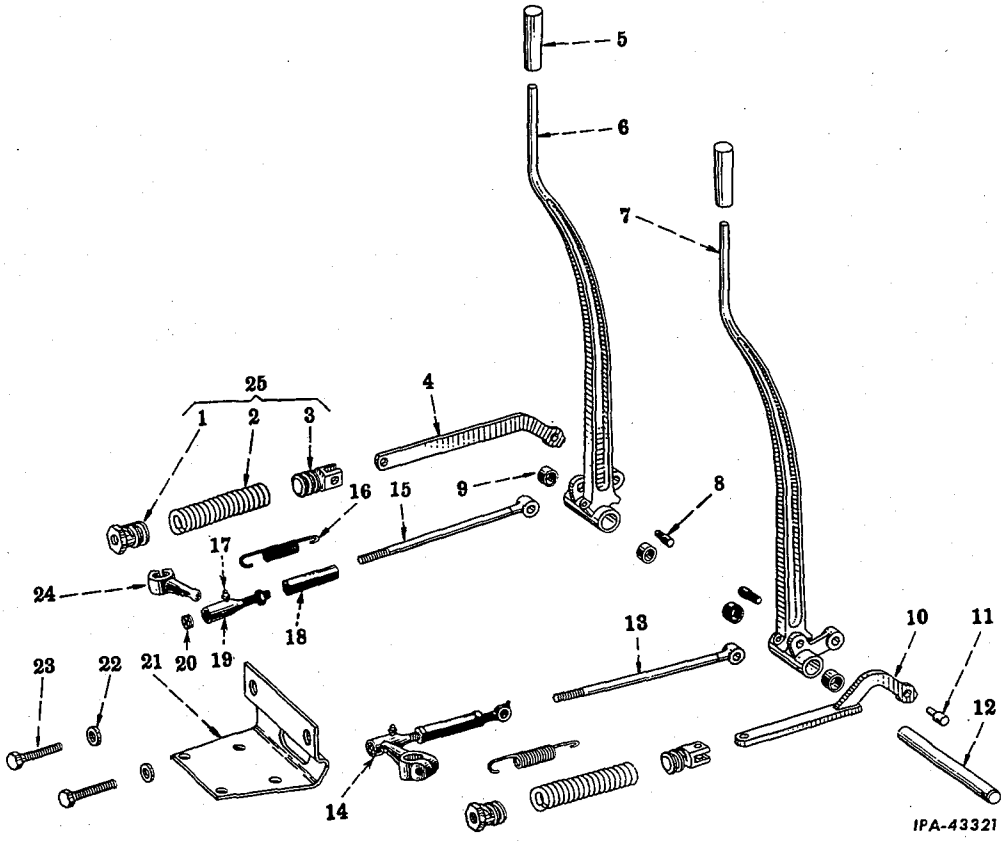

STEERING SYSTEM

REF. NO.	PART NUMBER	DESCRIPTION
		STEERING CLUTCH CONTROLS (T-61 and TD-61)
1	275 219 R1	NUT, steering clutch hand lever booster spring adjuster (2)
2	275 218 R1	SPRING, steering clutch hand lever booster (2)
3	275 220 R1	YOKE, steering clutch hand lever booster spring (2)
4	275 715 R1	LINK, LH steering clutch hand lever booster spring 1/8 x 1" cotter PIN 23/32 x 1-3/8" x No. 13 ga. WASHER
5	41 597 DA	HANDLE, steering clutch hand lever (2)
6	275 712 R11	LEVER ASSEMBLY, LH steering clutch hand (order 278 140 R11, 278 141 R11 and 275 198 R21) (TD-61 38951 to 40923)
6	278 140 R11	LEVER ASSEMBLY, LH steering clutch hand (TD-61 40924 up) (Composed of - 2 BUSHING 42 175 D 1 EYE 275 784 R1 1 HANDLE 41 597 DA §1 LEVER 1 PIN 59 310 D 1 PIN 257 620 R1) 7/16" NUT 7/16 x 1-1/2" hex-hd. cap SCREW
7	275 713 R11	LEVER ASSEMBLY, LH steering clutch hand (order 278 141 R11, 278 140 R11 and 275 198 R21) (TD-61 38951 to 40923)
7	278 141 R11	LEVER ASSEMBLY, LH steering clutch hand (TD-61 40924 up) (Composed of - 2 BUSHING 42 175 D 1 EYE 275 578 R1 1 HANDLE 41 597 DA §1 LEVER 1 PIN 59 310 D 1 PIN 257 620 R1) 7/16" NUT 7/16 x 1-1/2" hex-hd. cap SCREW
8	59 310 D	PIN, steering clutch operating turnbuckle eye (2)
9	42 175 D	BUSHING, steering clutch hand lever (4)
10	275 716 R91	LINK, RH steering clutch handlever booster spring 1/8 x 1" cotter PIN 23/32 x 1-3/8" x No. 13 ga. WASHER
11	257 620 R1	PIN, steering clutch booster link front (2)
12	275 217 R1	SHAFT, steering clutch hand lever 5/16 x 2" hex-hd. cap SCREW 5/16" lock WASHER
13	275 785 R1	EYE, RH steering clutch operating turnbuckle 5/8NF jam NUT (LH thread)
14	59 313 D	SOCKET, RH steering clutch operating turnbuckle 5/8NF jam NUT
15	275 784 R1	EYE, LH steering clutch operating turnbuckle 5/8NF jam NUT (LH thread)
16	59 315 D	SPRING, steering clutch release lever return (2)

STEERING SYSTEM

REF. NO.	PART NUMBER	DESCRIPTION
		STEERING CLUTCH CONTROLS (T-61 and TD-61) - Continued
17	138 322 H	FITTING, steering clutch operating turnbuckle socket lubrication (Alemite No. 1610-B) (optional with 271 409) (2)
17	271 409	FITTING, steering clutch operating turnbuckle socket lubrication (Lincoln No. 105000) (optional with 138 322 H) (2)
18	59 311 D	TURNBUCKLE, steering clutch operating (2)
19	59 312 D	SOCKET, LH steering clutch operating turnbuckle 5/8NF jam NUT
20	59 314 D	PLUG, steering clutch operating turnbuckle socket (2) 1/8 x 1-1/2" cotter PIN
21	275 395 R11	ANCHOR, steering clutch hand lever booster spring 7/16 x 1-1/4" hex-hd. cap SCREW (4) 7/16" lock WASHER
22	257 625 R1	WASHER, steering clutch hand lever booster spring adjuster bolt (2)
23	275 222 R1	BOLT, steering clutch hand lever booster spring adjuster (2)
24	59 317 DA	LEVER, steering clutch release (2) 1/2NF NUT (2) 1/2NF x 2-1/2" hex-hd. cap SCREW (2) 1/2" lock WASHER (2)
25	275 221 R91	SPRING w/NUT, 275 219 R1, SPRING, 275 218 R1 and YOKE, 275 220 R1, steering clutch hand lever booster (2) 1/2" rod end PIN (2) 1/8 x 7/8" cotter PIN (2)
	138 322 H	FITTING, steering clutch hand lever lubrication (Alemite No. 1610-B) (optional with 271 409) (2)
	271 409	FITTING, steering clutch hand lever lubrication (Lincoln No. 105000) (optional with 138 322 H) (2)
	271 287	FITTING, steering clutch operating turnbuckle eye lubrication (Alemite No. 1641-B) (optional with 271 411) (2)
	271 411	FITTING, steering clutch operating turnbuckle eye lubrication (Lincoln No. 105010) (optional with 271 287) (2)

§ - Not Furnished Separately

STEERING SYSTEM

REF. NO.	PART NUMBER	DESCRIPTION

STEERING CLUTCH CONTROLS
(TD-91)

STEERING SYSTEM

REF. NO.	PART NUMBER	DESCRIPTION

STEERING CLUTCH CONTROLS
(TD-91) - Continued

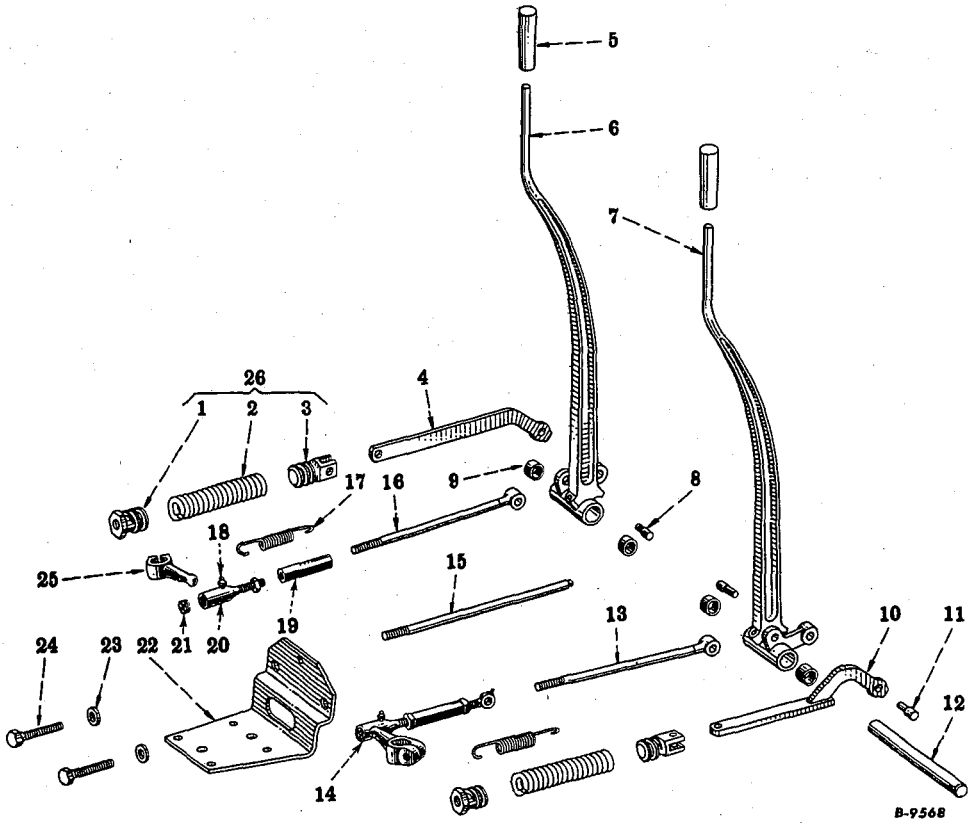

1	275 219 R1	NUT, steering clutch hand lever booster spring adjuster (2)
2	275 218 R1	SPRING, steering clutch hand lever booster (2)
3	275 220 R1	YOKE, steering clutch hand lever booster spring (2)
4	275 715 R1	LINK, LH steering clutch hand lever booster spring 1/8 x 1" cotter PIN 23/32 x 1-3/8" x No. 13 ga. WASHER
5	41 597 DA	HANDLE, steering clutch hand lever (2)
6	275 712 R11	LEVER ASSEMBLY, LH steering clutch hand (order 278 140 R11, 278 141 R11 and 275 198 R21) (TD-91 60301 to 66044)
6	278 140 R11	LEVER ASSEMBLY, LH steering clutch hand (TD-91 66045 up) (Composed of - 2 BUSHING 42 175 D 1 EYE 275 784 R1 1 HANDLE 41 597 DA §1 LEVER 1 PIN 59 310 D 1 PIN 257 620 R1) 7/16" NUT 7/16 x 1-1/2" hex-hd. cap SCREW
7	275 713 R11	LEVER ASSEMBLY, RH steering clutch hand (order 278 141 R11, 278 140 and 275 198 R2 (TD-91 60401 to 66044)
7	278 141 R11	LEVER ASSEMBLY, RH steering clutch hand (TD-91 66045 up) (Composed of - 2 BUSHING 42 175 D 1 EYE 275 785 R1 1 HANDLE 41 597 DA §1 LEVER 1 PIN 59 310 D 1 PIN 257 620 R1) 7/16" NUT 7/16 x 1-1/2" hex-hd. cap SCREW
8	59 310 D	PIN, steering clutch operating turnbuckle eye (2)
9	42 175 D	BUSHING, steering clutch hand lever (4)
10	275 716 R91	LINK, RH steering clutch hand lever booster spring 1/8 x 1" cotter PIN 23/32 x 1-3/8" x No. 13 ga. WASHER
11	257 620 R1	PIN, steering clutch booster link front (2)
12	275 217 R1	SHAFT, steering clutch hand lever 5/16 x 2" hex-hd. cap SCREW 5/16" lock WASHER

§ - Not Furnished Separately

PRINTED IN UNITED STATES OF AMERICA

REF. NO.	PART NUMBER	DESCRIPTION
		STEERING CLUTCH CONTROLS (TD-91) - Continued
13	275 785 R1	EYE, RH steering clutch operating turnbuckle 5/8NF jam NUT (LH thread)
14	59 313 D	SOCKET, RH steering clutch operating turnbuckle 5/8NF jam NUT
15	275 223 R1	BRACE, steering clutch hand lever booster spring anchor 5/8" jam NUT (2)
16	275 784 R1	EYE, LH steering clutch operating turnbuckle 5/8NF jam NUT (LH thread)
17	59 315 D	SPRING, steering clutch release lever return (2)
18	138 322 H	FITTING, steering clutch operating turnbuckle socket lubrication (Alemite No. 1610-B) (optional with 271 409) (2)
18	271 409	FITTING, steering clutch operating turnbuckle socket lubrication (Lincoln No. 105000) (optional with 138 322 H) (2)
19	59 311 D	TURNBUCKLE, steering clutch operating (2)
20	59 312 D	SOCKET, LH steering clutch operating turnbuckle 5/8NF jam NUT
21	59 314 D	PLUG, steering clutch operating turnbuckle socket (2) 1/8 x 1-1/2" cotter PIN (2)

-166-

STEERING SYSTEM

REF. NO.	PART NUMBER	DESCRIPTION
		STEERING CLUTCH CONTROLS (TD-91) - Continued
22	275 224 R1	ANCHOR, steering clutch hand lever booster spring 7/16 x 1-1/4" hex-hd. cap SCREW (4) 7/16" lock WASHER (4)
23	257 625 R1	WASHER, steering clutch hand lever booster spring adjuster bolt (2)
24	275 222 R1	BOLT, steering clutch hand lever booster spring adjuster (2)
25	59 317 DA	LEVER, steering clutch release (2) 1/2NF NUT 1/2NF x 2-1/2" hex-hd. cap SCREW (2) 1/2" lock WASHER (2)
26	275 221 R91	SPRING w/NUT, 275 219 R1, SPRING, 275 218 R1 and YOKE, 275 220 R1, steering clutch hand lever booster (2) 1/2" rod end PIN (2) 1/8 x 7/8" cotter PIN (2)
	138 322 H	FITTING, steering clutch hand lever lubrication (Alemite 1610-B) (optional with 271 409) (2)
	271 409	FITTING, steering clutch hand lever lubrication (Lincoln 105010) (optional with 138 322 H) (2)
	271 287	FITTING, steering clutch operating turnbuckle eye lubrication (Alemite 1641-B) (optional with 271 411) (2)
	271 411	FITTING, steering clutch operating turnbuckle eye lubrication (Alemite 15010) (optional with 271 287)

DRIVE BEVEL GEAR
(T-61, TD-61 and TD-91)

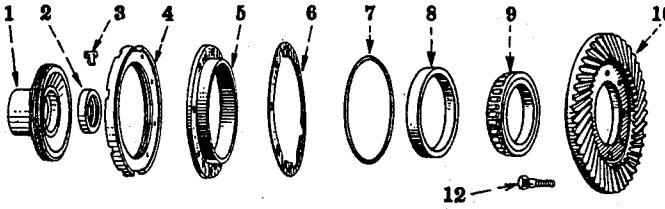

1	271 758 R2	ADJUSTER, drive bevel gear bearing (2) (T-61 and TD-61)
1	271 855 R2	ADJUSTER, drive bevel gear bearing (2) (TD-91)
2	279 495 R92	OIL SEAL, steering clutch shaft coupling (2) (T-61 and TD-61)
2	279 493 R92	OIL SEAL, steering clutch shaft coupling (2) (TD-91)
3	271 762 R1	LOCK, drive bevel gear bearing adjuster (2) 3/8 x 5/8" hex-hd. cap SCREW (4) 3/8" lock WASHER (4)
4	271 777 R2	RING, drive bevel gear bearing adjuster (2) (T-61 and TD-61)
4	271 856 R2	RING, drive bevel gear bearing adjuster (2) (TD-91)

DRIVE BEVEL GEAR
(T-61, TD-61 and TD-91) - Continued

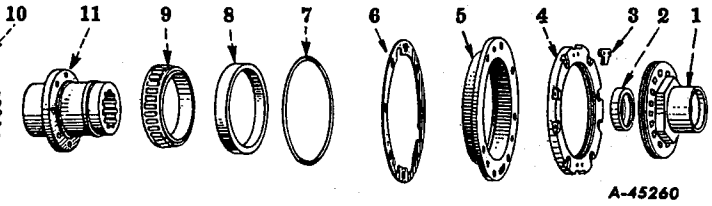

5	271 757 R1	CAGE, drive bevel gear bearing (2) (T-61 and TD-61)
5	271 854 R1	CAGE, drive bevel gear bearing (2) (TD-91)
6	254 964 R1	GASKET, drive bevel gear bearing cage (2) (T-61 and TD-61)
6	254 970 R1	GASKET, drive bevel gear bearing cage (2) (TD-91)
7	271 759 R2	RING, drive bevel gear bearing adjuster sealing (2) (T-61 and TD-61)
7	271 857 R2	RING, drive bevel gear bearing adjuster sealing (2) (TD-91)
8	271 787 R1	CUP, drive bevel gear bearing (2) (T-61 and TD-61)
8	272 120 R1	CUP, drive bevel gear bearing (2) (TD-91)
9	271 786 R91	CONE, drive bevel gear bearing (2) T-61 and TD-61)
9	272 119 R91	CONE, drive bevel gear bearing (2) (TD-91)

STEERING SYSTEM

REF. NO.	PART NUMBER	DESCRIPTION

DRIVE BEVEL GEAR
(T-61, TD-61 and TD-91) - Continued

10	271 754 R1	GEAR, drive bevel (42 T) (T-61 and TD-61)
10	279 338 R1	GEAR, drive bevel (43 T) (TD-91)
11	271 755 R1	HUB, drive bevel gear (T-61 and TD-61)
11	271 853 R1	HUB, drive bevel gear (TD-91)
12	274 075 R2	BOLT, drive bevel gear dowel (6)
	274 863 R1	BOLT, drive bevel gear bearing cage and adjuster RING (16) (T-61 and TD-61)
	274 864 R1	BOLT, drive bevel gear bearing cage and adjuster RING (16) (TD-91)

-167-

STEERING SYSTEM

REF. NO. PART NUMBER DESCRIPTION

DRIVE BEVEL GEAR
(T-61, TD-61 and TD-91) - Continued

	25 079 D	NUT, drive bevel gear dowel bolt (6)
	271 753 R91	PINION and SHAFT, bevel, 271 763 R1 w/drive bevel GEAR, 271 754 R1 (matched pair) (See NOTE) (T-61 and TD-61)
	279 339 R91	PINION and SHAFT, bevel, 279 337 R1 w/drive bevel GEAR, 279 338 R1 (matched pair) (See NOTE) (TD-91)

NOTE - Also illustrated and listed under heading "Transmission Gear Shifter Mechanism."

STEERING CLUTCH, RELEASE SHAFT AND MECHANISM (T-61 and TD-61)

STEERING CLUTCH, RELEASE SHAFT AND MECHANISM

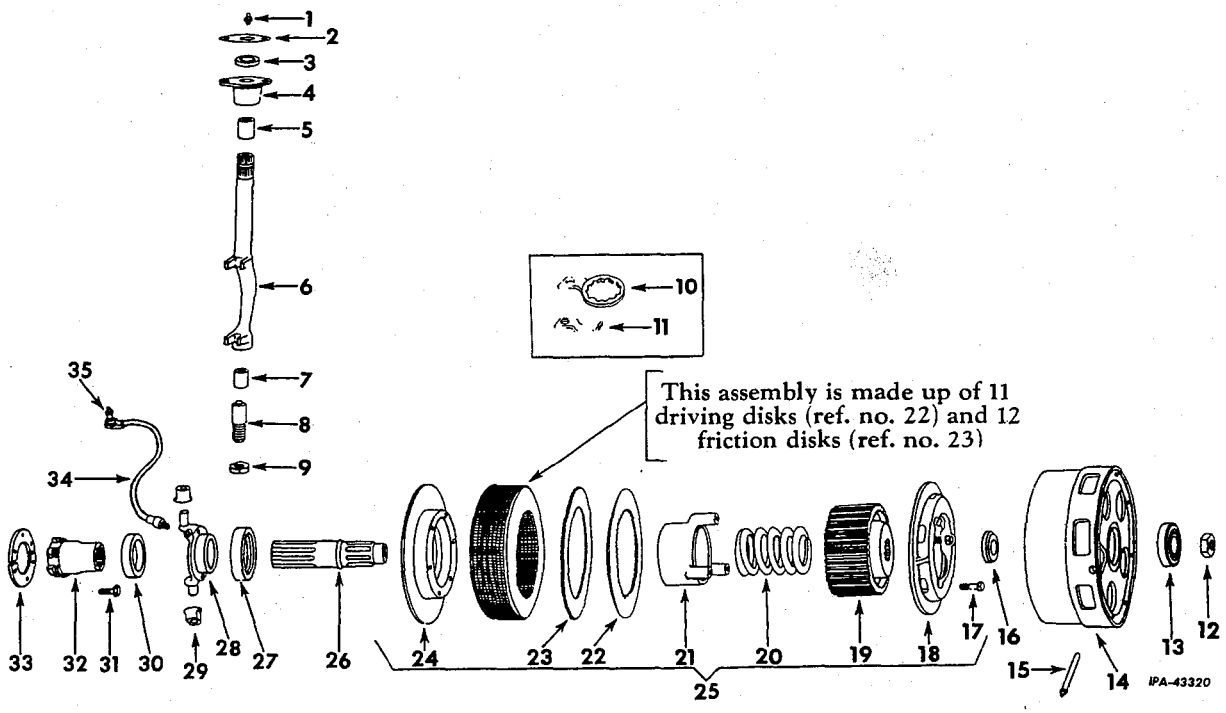

1	271 409	FITTING, steering clutch release fork lubrication (optional with 138 322 H) (2)
1	138 322 H	FITTING, steering clutch release fork lubrication (optional with 271 409) (2)
2	46 040 D	RETAINER, steering clutch release shaft bearing felt (2) 7/16 x 1-1/4" hex-hd. cap SCREW (4) 7/16" lock WASHER (4)
3	46 038 D	FELT, steering clutch release shaft bearing (2)
4	6 376 DAX	BEARING w/BUSHING, 53 597 D, steering clutch release shaft (2)
5	53 597 D	BUSHING, steering clutch release shaft (2)
6	55 956 DC	SHAFT and FORK w/BUSHING, 55 955 D and lubrication FITTING, 138 322 H, steering clutch release (2)
7	55 955 D	BUSHING, steering clutch release fork pivot (2)
8	55 954 D	PIVOT, steering clutch release fork (2)
9	47 726 D	NUT, steering clutch release fork pivot lock (2)
10	60 096 D	LOCK, steering clutch release fork pivot nut (2)
11	60 095 D	LOCK, steering clutch release fork pivot (2) 1/2 x 1" hex-hd. cap SCREW (2) 1/2" lock WASHER (2)
12	258 278 R1	NUT, steering clutch bearing retainer pilot (2)
13	ST 333	BEARING, steering clutch pilot ball (2)

PRINTED IN UNITED STATES OF AMERICA

REF. NO.	PART NUMBER	DESCRIPTION
		STEERING CLUTCH, RELEASE SHAFT AND MECHANISM (T-61 and TD-61) - Continued
14	8 154 DA	DRUM, steering clutch (2) 3/8NF x 7/8" hex-hd. cap SCREW (16) 3/8" lock WASHER (16)
15	51 433 D	FITTING, steering clutch pilot bearing lubrication (2)
16	51 430 DX	SLINGER w/SPACER, steering clutch pilot bearing oil (2)
17	54 969 D	BOLT, steering clutch pressure plate dowel (6) 7/16" lock WASHER (6)
18	8 155 DB	PLATE, steering clutch pressure (2)
19	8 153 DE	HUB, steering clutch (59 T) (2)
20	54 759 DA	SPRING, steering clutch pressure (2)
21	8 156 DA	RETAINER, steering clutch pressure spring (2)
22	43 729 DB	FACING, steering clutch friction (24)
23	43 728 D	DISC, steering clutch driving (22)
24	6 659 DA	PLATE, steering clutch hub (2)
25	51 488 DD	CLUTCH ASSEMBLY, steering (2) (Composed of - 3 BOLT 54 969 D 11 DISC 43 728 D 12 FACING 43 729 DB 1 HUB 8 153 DE 1 PLATE 6 659 DA 1 PLATE 8 155 DB 1 RETAINER 8 156 DA 3 SCREW 16 077 R1 1 SPRING 54 759 DA) 16 077 R1 SCREW, 7/16 x 3-7/8" hex-hd. cap (6) 7/16" lock WASHER (6)
26	258 276 R2	SHAFT, steering clutch (2)
27	55 670 D	BEARING, steering clutch release thrust ball (2)
28	8 157 DAX	COLLAR w/PLUG, 103 883, steering clutch release (2)
	103 883	PLUG, 1/8" slotted-hdls. pipe (2)
29	42 298 DB	BUSHING, steering clutch release pin (4)
30	45 134 D	OIL SEAL, steering clutch shaft coupling (2)
31	260 612 R1	BOLT, steering clutch shaft coupling retainer (12)
32	254 959 R11	COUPLING w/PLUG, 172 598, steering clutch shaft (6 T) (2)
33	254 960 R1	RETAINER, steering clutch shaft (4)
34	51 431 DX	TUBE w/COUPLING and BRACKET, steering clutch release bearing grease (2)
	13 243 R1	BOLT, 1/4 x 3/4" machine (4) 1/4" NUT (4) 1/4" lock WASHER (4)
35	271 281	FITTING, steering clutch release bearing lubrication (optional with 271 410) (2)
35	271 410	FITTING, steering clutch release bearing lubrication (optional with 271 281) (2)

REF. NO.	PART NUMBER	DESCRIPTION
		STEERING CLUTCH, RELEASE SHAFT AND MECHANISM (T-61 and TD-61) - Continued
	105 404	NIPPLE, steering clutch release collar (2)
		WIRE, locking (16 ga. x 8" long) (steering clutch shaft coupling bolt) (order 278 027 R91) (6)
	278 027 R91	WIRE, locking bulk (16 ga.) (customer must specify length required) (X)

X - As Required

REF. NO.	PART NUMBER	DESCRIPTION

STEERING CLUTCH, RELEASE SHAFT AND MECHANISM (TD-91)

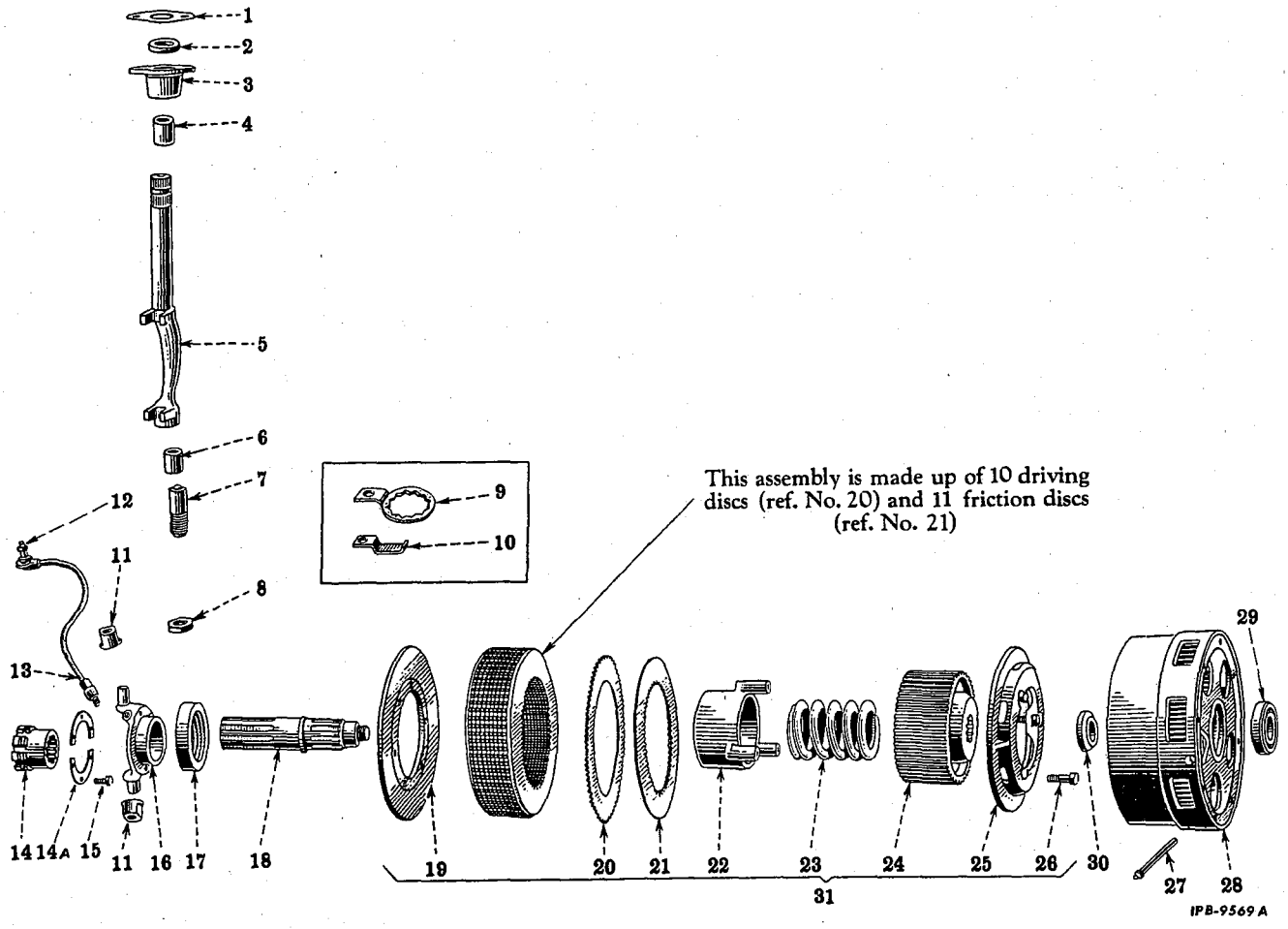

1	46 040 D	RETAINER, steering clutch release shaft bearing felt (2) 7/16 x 1-1/4" hex-hd. cap SCREW (4) 7/16" lock WASHER (4)
2	46 038 D	FELT, steering clutch release shaft bearing (2)
3	6 376 DAX	BEARING w/BUSHING, 53 597 D, steering clutch release shaft (2)
4	53 597 D	BUSHING, steering clutch release shaft (2)
5	55 959 DC	FORK w/BUSHING, 55 955 D and FITTING, 138 322 H, steering clutch release (2)
6	55 955 D	BUSHING, steering clutch release fork pivot (2)
7	55 954 D	PIVOT, steering clutch release fork (2)
8	47 726 D	NUT, steering clutch release fork pivot lock (2)
9	60 096 D	LOCK, steering clutch release fork pivot nut (2)

REF. NO.	PART NUMBER	DESCRIPTION

STEERING CLUTCH, RELEASE SHAFT AND MECHANISM (TD-91) - Continued

10	60 095 D	LOCK, steering clutch release fork pivot (2) 1/2 x 1" hex-hd. cap SCREW (2) 1/2" lock WASHER (2)
11	42 298 DB	BUSHING, steering clutch release pin (4)
12	18 275 R91	FITTING, steering clutch release bearing lubrication (Alemite 1623-B) (2)
13	52 244 DX	TUBE w/COUPLING and BRACKET, steering clutch release bearing grease (2)
	13 243 R1	BOLT, 1/4 x 3/4" sq-hd. machine (4) 1/4" NUT (4) 1/4" lock WASHER (4)
14	254 967 R11	COUPLING w/PLUG, 172 601, steering clutch shaft (6 T) (2)
14A	254 968 R1	RETAINER, steering clutch shaft coupling (4)
15	260 613 R1	BOLT, steering clutch shaft coupling retainer (12)
16	52 243 DAX	COLLAR w/PLUG, 103 883, steering clutch release (2)

REF. NO.	PART NUMBER	DESCRIPTION
		STEERING CLUTCH, RELEASE SHAFT AND MECHANISM (TD-91) - Continued
17	55 745 D	BEARING, steering clutch release thrust (Aetna A-1555) (2)
18	258 277 R2	SHAFT, steering clutch (2)
19	6 470 D	PLATE, steering clutch hub (2) 7/16 x 1" hex-hd. cap SCREW (12) 7/16" lock WASHER (12)
20	46 826 D	DISC, steering clutch driving (20)
21	46 825 DB	DISC, steering clutch friction (22)
22	8 236 D	RETAINER, steering clutch pressure spring (2)
23	54 610 DB	SPRING, steering clutch pressure (2)
24	8 238 DB	HUB, steering clutch (2)
25	8 237 DB	PLATE, steering clutch pressure (2)
26	54 969 D	BOLT, steering clutch pressure plate dowel (6)
27	46 831 D	FITTING, steering clutch pilot bearing lubrication (2)
28	8 235 D	DRUM, steering clutch (2)
29	ST 333	BEARING, steering clutch pilot (2)
30	52 239 D	SPACER, steering clutch pilot bearing (2)
31	52 242 DC	CLUTCH ASSEMBLY, steering (2) (Composed of - 3 BOLT 54 969 D 11 DISC 46 825 DB 10 DISC 46 826 D 1 HUB 8 238 DB 1 PLATE 6 470 D 1 PLATE 8 237 DB 1 RETAINER 8 236 D 1 SPRING 54 610 DA)
	138 322 H	FITTING, steering clutch release fork lubrication (Alemite 1610-B) (optional with 271 409) (2)
	271 409	FITTING, steering clutch release fork lubrication (Lincoln 105000) (optional with 138 322 H) (2)
	258 278 R1	NUT, steering clutch pilot bearing retainer (2)
	103 883	PLUG, 1/8" hdls. steering clutch release collar pipe (2)
	172 601	PLUG, steering clutch shaft coupling (2)
		WIRE, locking (16 ga. x 8" long) (steering clutch shaft coupling bolt) (order 278 027 R91) (6)
	278 027 R91	WIRE, locking bulk (16 ga.) (customer must specify length required) (X)

X - As Required

-170-

STEERING SYSTEM

PRINTED IN UNITED STATES OF AMERICA

REF. NO.	PART NUMBER	DESCRIPTION

TRACK FRAME DIAGONAL BRACE
(T-61 and TD-61) (Not Rigid Track Frame)

REF. NO.	PART NUMBER	DESCRIPTION

TRACK FRAME DIAGONAL BRACE
(T-61 and TD-61) (Not Rigid Track Frame) - Continued

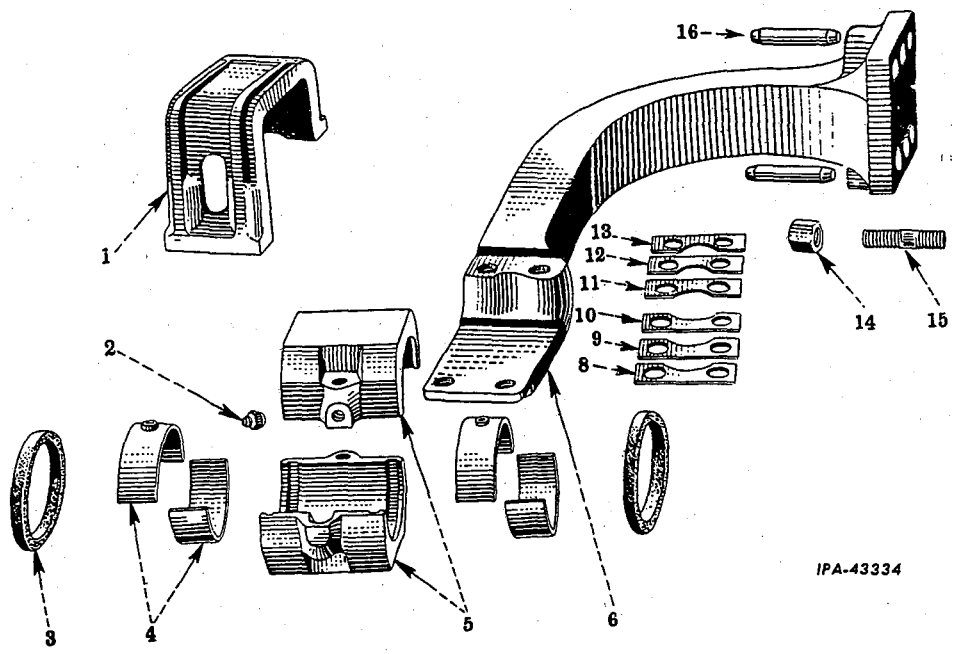

1	8 468 DA	CLAMP, track frame diagonal brace (2) 5/8 x 1-1/2" hex-hd. cap SCREW (4) 5/8 x 3" hex-hd. cap SCREW (4)
2	271 409	FITTING, track frame diagonal brace bearing lubrication (optional with 138 322 H) (Lincoln 105000) (2)
2	138 322 H	FITTING, track frame diagonal brace bearing lubrication (optional with 271 409) (Alemite 1610-B) (2)
3	53 646 D	FELT, track frame diagonal brace bearing (4)
4	57 238 D	BUSHING, track frame diagonal brace bearing (set of 4) (2)
5	57 234 D	BEARING, upper and lower track frame diagonal brace (2) 3/8NF NUT (4) 3/8NF x 2-1/2" hex-hd. cap SCREW (4) 3/8" external-tooth lock WASHER (4)
6	258 286 R3	BRACE, LH track frame diagonal (not wide tread)
6	258 287 R3	BRACE, RH track frame diagonal (not wide tread)
6	258 288 R3	BRACE, LH track frame diagonal (wide tread)
6	258 289 R3	BRACE, RH track frame diagonal (wide tread)
8	45 999 D	SHIM, outer track frame diagonal brace clamp (light) (4)
9	45 998 D	SHIM, outer track frame diagonal brace clamp (medium) (2)
10	45 997 D	SHIM, outer track frame diagonal brace clamp (heavy) (2)
11	45 996 D	SHIM, inner track frame diagonal brace clamp (light) (4)
12	45 995 D	SHIM, inner track frame diagonal brace clamp (medium) (2)
13	45 994 D	SHIM, inner track frame diagonal brace clamp (heavy) (2)
14	32 454 D	NUT, track frame diagonal brace stud (8)
15	62 385 D	STUD, track frame diagonal brace (8)
16	265 966 R1	PIN, track frame diagonal brace dowel (4) 7/8NF x 3/4" hex-soc-hd. set SCREW (4)

REF. NO.	PART NUMBER	DESCRIPTION

TRACK FRAME DIAGONAL BRACE
(TD-91) (Not Rigid Track Frame)

REF. NO.	PART NUMBER	DESCRIPTION

TRACK FRAME DIAGONAL BRACE
(TD-91) (Not Rigid Track Frame) - Continued

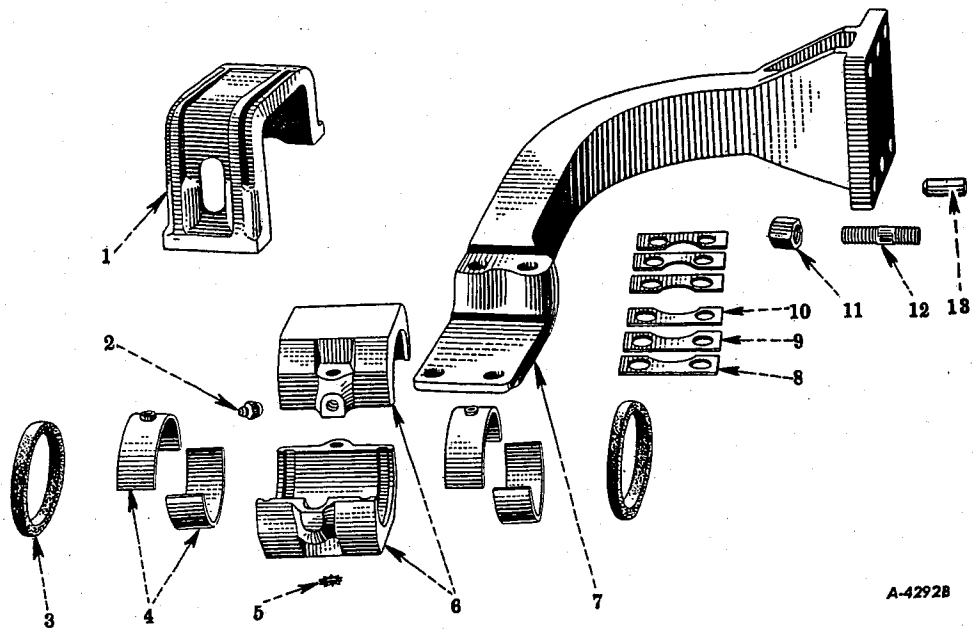

1	8 471 DA	CLAMP, track frame diagonal brace (2) 5/8 x 1-1/2" hex-hd. cap SCREW (4) 5/8 x 3-1/4" hex-hd. cap SCREW (4)
2	138 322 H	FITTING, track frame diagonal brace bearing lubrication (Alemite 1610-B) (optional with 271 409) (2)
2	271 409	FITTING, track frame diagonal brace bearing lubrication (Lincoln 105000) (optional with 138 322 H)
3	53 656 D	FELT, track frame diagonal brace bearing (4)
4	57 239 D	BUSHING, track frame diagonal brace bearing (set of four) (2)
5	18 942 D	WASHER, track frame diagonal brace bearing lock (Shakeproof 1122) (4)
6	57 235 D	BEARING SET, track frame diagonal brace (upper and lower) (2) 7/16NF NUT (4) 7/16NF x 3" hex-hd. cap SCREW (4) 7/16" lock WASHER (4)
7	258 297 R3	BRACE, LH track frame diagonal (not wide tread)
7	258 298 R3	BRACE, RH track frame diagonal (not wide tread)
7	258 299 R3	BRACE, LH track frame diagonal (wide tread)
7	258 300 R3	BRACE, RH track frame diagonal (wide tread)
8	47 780 D	SHIM, track frame diagonal brace clamp (light) (8)
9	47 779 D	SHIM, track frame diagonal brace clamp (medium) (4)
10	47 778 D	SHIM, track frame diagonal brace clamp (heavy) (4)
11	45 293 D	NUT, track frame diagonal brace stud (8) 3/4" lock WASHER (8)
12	63 265 D	STUD, track frame diagonal brace (8)
13	266 064 R1	PIN, track frame diagonal brace dowel (4) 1NF x 1" hex-soc-hd. cup-pt. set SCREW (4)

TRACK DRIVE

REF. NO.	PART NUMBER	DESCRIPTION

TRACK ASSEMBLY
(T-61, TD-61 and TD-91) (4 Roller) (See NOTE)

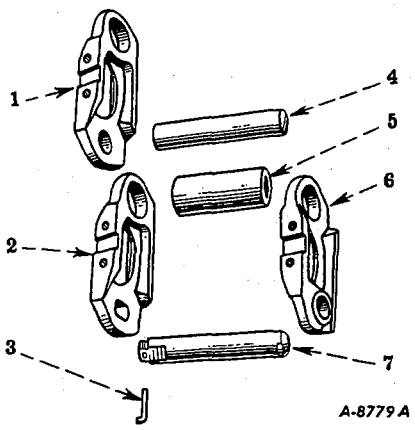

⊗- KEY TO UNITS
A - Service Parts for Track Assembly (T-61 and TD-61)
B - Service Parts for Track Assembly (TD-91)

⊗ Letters of these units correspond with those shown following the description of the parts in the list below and identifies the unit for which the part is used. Items without letters after the description indicates the part is used for all units.

1	263 938 R1	LINK, RH track (62 for Unit A)
1	263 970 R1	LINK, RH track (62 for Unit B)
2	263 939 R1	LINK, LH master track (2 for Unit A)
2	263 940 R1	LINK, RH master track (2 for Unit A)
2	263 971 R1	LINK, LH master track (2 for Unit B)
2	263 972 R1	LINK, RH master track (2 for Unit B)
3	263 945 R1	LOCKWIRE, track master link pin (2)
4	263 943 R1	PIN, track link (62 for Unit A)
4	263 975 R1	PIN, track link (64 for Unit B)
5	263 941 R2	BUSHING, track link (62 for Unit A)
5	263 942 R2	BUSHING, track master link (2 for Unit A)
5	263 973 R2	BUSHING, track link (64 for Unit B)
5	263 974 R2	BUSHING, track master link (2 for Unit B)
6	263 937 R1	LINK, LH track (62 for Unit A)
6	263 969 R1	LINK, LH track (64 for Unit B)
7	263 944 R1	PIN, track master link (2 for Unit A)
7	263 976 R1	PIN, track master link (2 for Unit B)
7	272 857 R91	PACKAGE, track link bushing field service (consists of BUSHING, 263 942 R2, PIN, 263 943 R1 and two SPACER, 272 852 R1) (Unit A)
	272 858 R91	PACKAGE, track link bushing field service (consists of BUSHING, 263 974 R2, PIN, 263 975 R1 and two SPACER, 272 853 R1) (Unit B)
	272 852 R1	SPACER, track master link bushing (used with PACKAGE, 272 857 R91 only) (2 for Unit A)
	272 853 R1	SPACER, track master link BUSHING (used with PACKAGE, 272 858 R91) (2 for Unit B)

TRACK DRIVE

REF. NO.	PART NUMBER	DESCRIPTION

TRACK ASSEMBLY
(T-61, TD-61 and TD-91) (4 Roller) (See NOTE) - Continued

263 946 R91 TRACK ASSEMBLY (4 roller) (less shoes) (2 for Unit A)
(Composed of -

31	BUSHING	263 941 R2
1	BUSHING	263 942 R2
31	LINK	263 937 R1
31	LINK	263 938 R1
1	LINK	263 939 R1
1	LINK	263 940 R1
1	LOCKWIRE	263 945 R1
31	PIN	263 943 R1
1	PIN	263 944 R1)

263 977 R91 TRACK ASSEMBLY (4 roller) (less shoes) (2 for Unit B)
(Composed of -

32	BUSHING	263 973 R2
1	BUSHING	263 974 R2
32	LINK	263 969 R1
32	LINK	263 970 R1
1	LINK	263 971 R1
1	LINK	263 972 R1
1	LOCKWIRE	263 945 R1
32	PIN	263 975 R1
1	PIN	269 376 R1)

NOTE - For 5 roller track assembly see extended track frame

REF. NO.	PART NUMBER	DESCRIPTION

TRACK FRAME, SPRING, RETAINER, TRACK IDLER AND ROLLERS (T-61 and TD-61) (4 Roller)

-174-

TRACK DRIVE

REF. NO.	PART NUMBER	DESCRIPTION

TRACK FRAME, SPRING, RETAINER, TRACK IDLER AND ROLLERS (T-61 and TD-61) (4 Roller) - Continued

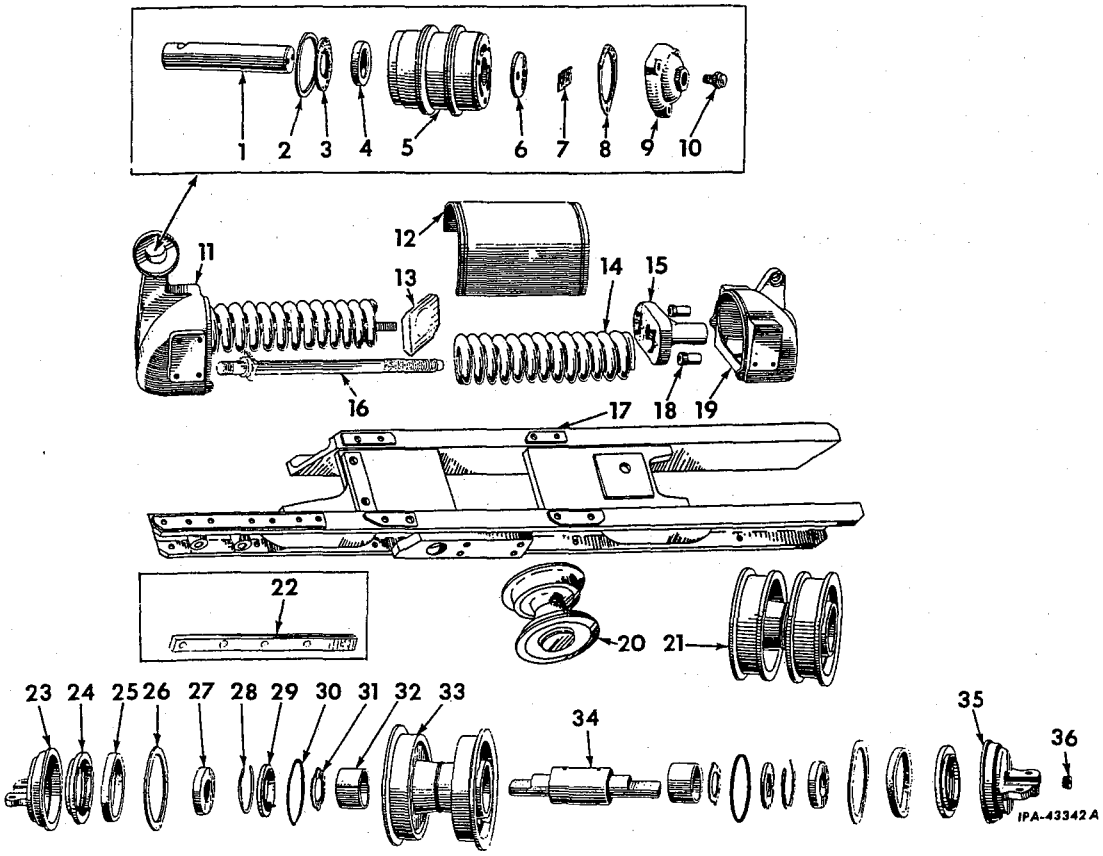

1	46 933 D	SHAFT, track idler (not extended track frame (2)
2	53 335 D	WASHER, outer track idler felt (not extended track frame) (2)
3	47 334 D	WASHER, inner track idler felt (not extended track frame) (2)
4	273 571 R91	OIL SEAL, track idler (not extended track frame) (optional with 275 597 R91) (2)
4	275 597 R91	OIL SEAL, track idler (optional with 273 571 R91) (2)
5	8 400 D	IDLER, track (not extended track frame) (2)
6	41 431 D	WASHER, track idler thrust (not extended track frame) (2) 1/2NF x 7/8" hex-hd. cap SCREW (4)
7	35 089 DA	LOCK, track idler thrust washer cap screw (not extended track frame) (2)
8	46 932 D	GASKET, track idler cap (not extended track frame) (2)
9	6 510 D	CAP, track idler (not extended track frame) (2) 3/8 x 1-1/2" hex-hd. cap SCREW (6) 3/8" lock WASHER (6)
10	37 290 D	FITTING, track idler lubrication (Lincoln 5750) (not extended track frame) (optional with 17 829 DA) (2)
10	17 829 DA	FITTING, track idler lubrication (Alemite 1823) (not extended track frame) (optional with 37 290 D) (2)
11	273 319 R11	RETAINER w/six CORK, 104 940 and four STUD, 62 385 D, LH rear track spring (together with two DOWEL, 273 326 R1 will work for 265 962 R11)
	104 940	CORK, 5/8 x 13/16" (No. 4) (6) 1/2NF x 3-1/4" hex-hd. cap SCREW 7/8 x 1-3/4" hex-hd. cap SCREW (2) 1/2NF NUT 1/2" lock WASHER
11	273 320 R11	RETAINER w/six CORK, 104 940 and four STUD, 62 385 D, RH rear track spring (together with two DOWEL, 273 326 R1 will work for 265 963 R11)
	104 940	CORK, 5/8 x 13/16" (No. 4) (6) 1/2NF x 3-1/4" hex-hd. cap SCREW 7/8 x 1-3/4" hex-hd. cap SCREW (2) 1/2NF NUT 1/2" lock WASHER
12	45 798 DBX	GUARD w/REINFORCING STRIPS, track spring (2) 3/8 x 3/4" hex-hd. cap SCREW (8) 3/8" lock WASHER (8) 13/32 x 13/16" x No. 16 ga. WASHER (8) (steel)

PRINTED IN UNITED STATES OF AMERICA

TRACK DRIVE

REF. NO.	PART NUMBER	DESCRIPTION
		TRACK FRAME, SPRING, RETAINER, TRACK IDLER AND ROLLERS (T-61 and TD-61) (4 Roller) - Continued
13	265 968 R1	LOCK, track spring adjusting rod nut (4)
14	272 926 R1	SPRING, track (4)
15	272 929 R1	RETAINER, front track spring (2)
16	272 927 R1	ROD, track spring adjusting (4) 1-1/8NF NUT (4) 5/32 x 1-3/4" cotter PIN (4)
17	273 313 R91	FRAME, LH track (not extended track frame) (together with two DOWEL, 273 326 R1 will work for 265 957 R93) (4 roller)
17	273 314 R91	FRAME, RH track (not extended track frame) (together with two DOWEL, 273 326 R1 will work for 265 958 R93) (4 roller)
18	272 928 R1	NUT, track spring adjusting (4)
19	265 971 R11	GUIDE w/six CORK, 104 940, LH track frame and track spring
	104 940	CORK, 5/8 x 13/16" (No. 4) (6)
19	265 972 R11	GUIDE w/six CORK, 104 940, RH track frame and track spring
	104 940	CORK, 5/8 x 13/16" (No. 4) (6)
20	272 625 R91	ROLLER w/SHAFT ASSEMBLY, track (single flange) (not extended track frame) (order 272 642 R92) (4) (TD-61 38951 to 41355)
20	304 900 R91	ROLLER w/SHAFT ASSEMBLY, track (single flange) (not extended track frame) (4) (TD-61 41356 up) (Composed of - 1 PLUG 304 908 R1 2 RETAINER 304 905 R11 2 RING 272 637 R1 2 RING 304 906 R1 1 ROLLER 272 627 R91 1 SHAFT 304 904 R91 2 WASHER 53 349 D)
21	272 626 R91	ROLLER w/SHAFT ASSEMBLY, track (double flange) (order 272 643 R92) (4) (TD-61 38951 tc 41355)
21	272 631 R91	ROLLER w/BUSHING, track (double flange) (Nos 2 and 3) (not extended track frame) (4)
21	304 901 R91	ROLLER w/SHAFT ASSEMBLY, track double flange) (4) (TD-61 41356 up) (Composed of - 1 PLUG 304 908 R1 2 RETAINER 304 905 R11 2 RING 272 637 R91 2 RING 304 906 R1 1 ROLLER 272 631 R1 1 SHAFT 304 904 R91 2 WASHER 53 349 D)
22	295 058 R1	BAR, LH outer channel track frame tapping (TD-61 38951 to 39773)
22	295 059 R1	BAR, RH outer channel track frame tapping (TD-61 38951 to 39773)
23	272 640 R1	BRACKET, track roller shaft inner (not extended track frame) (8) 1/2NF NUT (16) 1/2NF x 1-5/8" hex-hd. cap SCREW (16) 1/2" lock WASHER (16)
24	274 914 R1	GASKET, track roller oil seal back-up (16) (TD-61 38951 to 41355)
24	304 816 R1	GASKET, track roller oil seal back-up (16) (TD-61 41356 up)
25	272 639 R1	WASHER, outer track roller felt (not extended track frame) (16)

TRACK DRIVE

REF. NO.	PART NUMBER	DESCRIPTION
		TRACK FRAME, SPRING, RETAINER, TRACK IDLER AND ROLLERS (T-61 and TD-61) (4 Roller) - Continued
26	53 339 D	WASHER, inner track roller sealing (not extended track frame) (16)
27	304 907 R91	OIL SEAL w/GASKET, 304 816 R1 (16) (TD-61 41356 up)
27	273 867 R91	OIL SEAL w/GASKET, 274 914 R1, track roller (16) (TD-61 38951 to 41355)
28	272 637 R1	RING, track roller retainer snap (not rigid track frame) (16)
29	272 635 R11	RETAINER w/PIN, track roller (not extended track frame) (order 304 905 R11 and 304 906 R1) (16) (TD-61 38951 to 41355)
29	304 905 R11	RETAINER w/PIN, track roller (not extended track frame) (16) (TD-61 41356 up)
30	304 906 R1	"O" RING, track roller (.065 thick x 3.098") (16) (TD-61 41356 up)
31	53 349 D	WASHER, track roller thrust (not extended track frame) (16)
32	45 242 DX	BUSHING SET, track roller (not extended track frame) (consists of two BUSHINGS) (8)
33	272 627 R91	ROLLER w/BUSHING, track (single flange) (Nos. 1 and 4) (not extended track frame) (4)
34	53 350 DB	SHAFT, track roller (not extended track frame) (8) (TD-61 38951 to 41355)
34	304 904 R1	SHAFT, track roller (not extended track frame) (8) (TD-61 41356 up)
35	272 640 R1	BRACKET, track roller shaft outer (not extended track frame) (8) (TD-61 41356 up)
35	272 641 R1	BRACKET, track roller shaft outer (not extended track frame) (8) (TD-61 38951 to 41355) 1/2NF NUT (10) 1/2 x 1-1/4" hex-hd. cap SCREW (3) 1/2NF x 1-5/8" hex-hd. cap SCREW (13) 1/2" lock WASHER (16)
36	37 290 D	FITTING, track roller lubrication (not extended track frame) (Lincoln 5750) (optional with 17 829 DA) (8) (TD-61 38951 to 41355)
36	17 829 DA	FITTING, track roller lubrication (not extended track frame) (Alemite 1823) (optional with 37 290 D) (8) (TD-61 38951 to 41355)
36	304 908 R1	PLUG, track roller shaft lubrication (8) (TD-61 41356 up)
	265 965 R1	BOLT, rear track spring retainer small (2)
	275 049 R2	BOLT, rear track spring retainer (6)
	265 965 R1	BOLT, track frame and spring guide (8)
	104 940	CORK, No. 4, 5/8" dia. x 13/16" long (2)
	273 326 R1	DOWEL, rear track spring retainer (4)
	274 912 R91	PACKAGE, track roller oil seal leather washer field service (service for 273 867 R91 and 304 907 R91) (consists of two WASHERS) (8)

TRACK DRIVE

REF. NO.	PART NUMBER	DESCRIPTION

TRACK FRAME, SPRING, RETAINER, TRACK IDLER AND ROLLERS (T-61 and TD-61) (4 Roller) - Continued

272 642 R92 PACKAGE, track roller and shaft field service (single flange) (will work for 272 625 R91) (See NOTE) (4) (TD-61 38951 to 41355)
(Composed of -

2	BRACKET	272 640 R1
1	ROLLER and SHAFT	304 900 R91
2	SEAL	304 907 R91
2	WASHER	53 339 D
2	WASHER	272 639 R1)

-176-

TRACK DRIVE

REF. NO.	PART NUMBER	DESCRIPTION

TRACK FRAME, SPRING, RETAINER, TRACK IDLER AND ROLLERS (T-61 and TD-61) (4 Roller) - Continued

272 643 R92 PACKAGE, track roller and shaft field service (double flange) (will work for 272 626 R91) (See NOTE) (4) (TD-61 38951 to 41355)
(Composed of -

2	BRACKET	272 640 R1
1	ROLLER and SHAFT	304 901 R91
2	SEAL	304 907 R91
2	WASHER	53 339 D
2	WASHER	272 639 R1)

NOTE - When PACKAGES, 272 642 R92 or 272 643 R92 are ordered, NOZZLE, 304 909 R91 and WRENCH, 304 910 R1 are required.

TRACK FRAME, SPRING, RETAINER, TRACK IDLER AND ROLLERS (TD-91) (4 Roller)

TRACK FRAME, SPRING, RETAINER, TRACK IDLER AND ROLLERS (TD-91) (4 Roller) - Continued

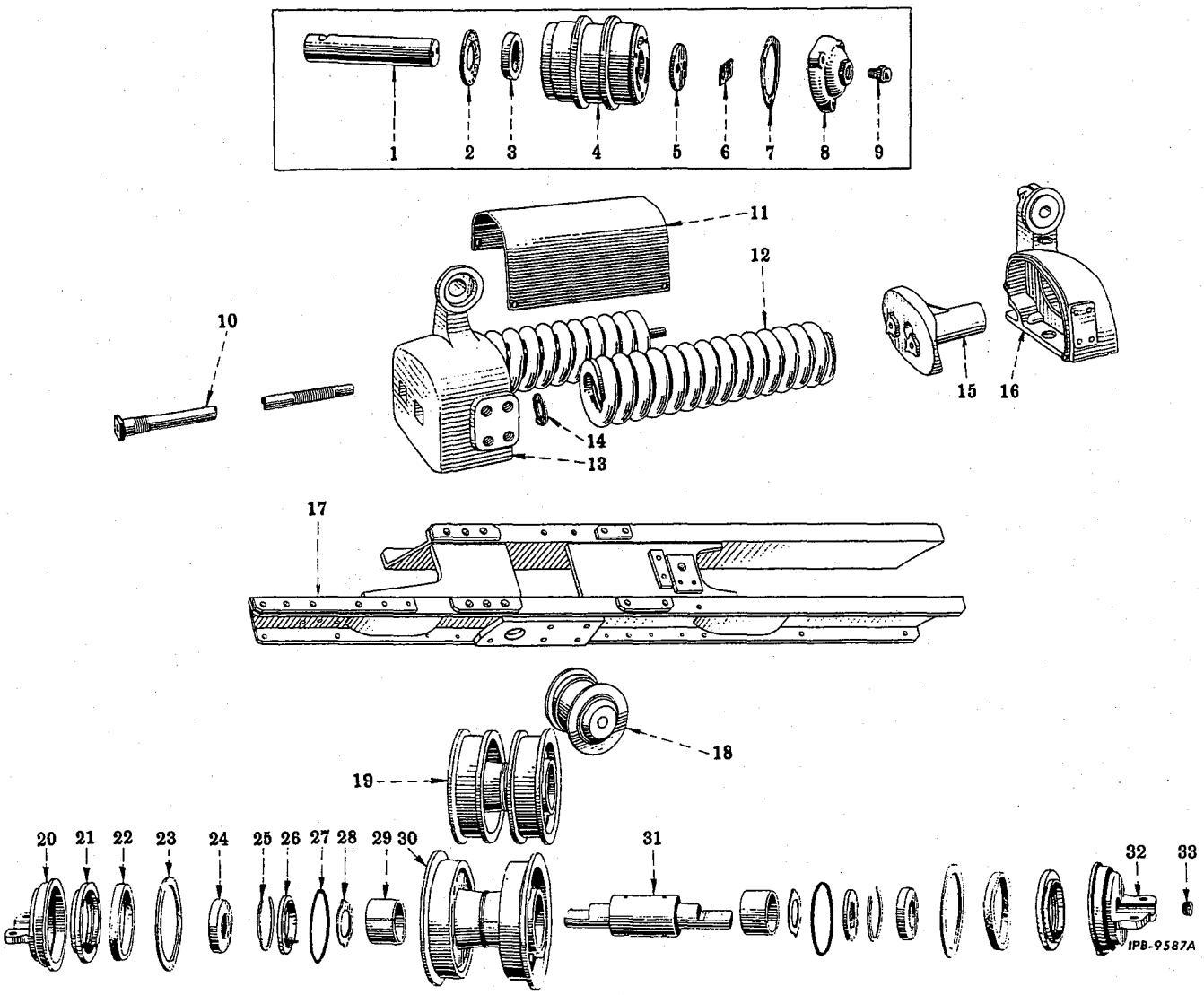

PRINTED IN UNITED STATES OF AMERICA

TRACK DRIVE

REF. NO.	PART NUMBER	DESCRIPTION
		TRACK FRAME, SPRING, RETAINER, TRACK IDLER AND ROLLERS (TD-91) (4 Roller) - Continued
1	47 558 D	SHAFT, track idler (4)
2	47 334 D	WASHER, track idler felt (4)
3	273 571 R91	OIL SEAL, track idler (optional with 275 597 R91) (4)
3	275 597 R91	OIL SEAL, track idler (optional with 273 571 R91) (4)
4	8 403 D	IDLER, track (4)
5	41 431 D	WASHER, track idler thrust (4) 1/2NF x 1-1/4" hex-hd. cap SCREW (8)
6	35 089 DA	LOCK, track idler thrust washer cap screw (4)
7	48 229 D	GASKET, track idler cap (4)
8	6 637 D	CAP, track idler (4) 1/2 x 1-1/2" hex-hd. cap SCREW (12) 1/2" lock WASHER (12)
9	17 829 DA	FITTING, track idler lubrication (optional with 37 290 D) (4)
9	37 290 D	FITTING, track idler lubrication (optional with 17 829 DA) (4)
10	272 932 R1	ROD, track spring adjusting (4) 1-1/4NF cd-pltd. thick-slotted NUT (4) 5/32 x 2" cotter PIN (4)
11	49 586 DAX	GUARD, track spring (2) 3/8 x 3/4" hex-hd. cap SCREW (8) 3/8" lock WASHER (8) 13/32 x 13/16" x No. 16 ga. WASHER (8) (steel)
12	272 931 R1	SPRING, track (4)
13	272 323 R11	RETAINER, w/six CORKS, 104 942 and four STUDS, 63 265 D, LH rear track spring (together w/two PIN, 273 326 R1 will work for 266 061 R11)
13	273 324 R11	RETAINER w/six CORKS, 104 942 and four STUDS, 63 265 D, RH rear track spring (together w/two PIN, 273 326 R1 will work for 266 062 R11) 1/2NF NUT 1/2NF x 3-1/2" hex-hd. cap SCREW 1/2" lock WASHER
	104 942	CORK, 3/4" dia. x 15/16" long (xx quality, size 6) (6)
14	266 066 R1	LOCK, track spring adjusting rod (4) 1/2NF jam NUT (4)
15	266 067 R1	RETAINER, front track spring (2)
16	266 069 R11	GUIDE w/ten CORKS, 104 942, LH track frame and track spring
16	266 070 R11	GUIDE w/ten CORKS, 104 942, RH track frame and track spring 1/2NF NUT 1/2NF x 3-1/2" hex-hd. cap SCREW 1/2" lock WASHER
	104 942	CORK, 3/4" dia. x 15/16" long (xx quality, size 6) (10)
17	273 321 R91	FRAME, LH track (not extended track frame) (together w/two PIN, 273 326 R1 will work for 266 057 R92) (4 roller)
17	273 322 R91	FRAME, RH track (not extended track frame) (together w/two PIN, 273 326 R1 will work for 266 058 R91) (4 roller)
	104 938	CORK, No. 2, 1/2" dia. x 11/16" long (4)

TRACK DRIVE

REF. NO.	PART NUMBER	DESCRIPTION
		TRACK FRAME, SPRING, RETAINER, TRACK IDLER AND ROLLERS (TD-91) (4 Roller) - Continued
18	304 911 R91	ROLLER AND SHAFT ASSEMBLY, track (single flange) (4) (TD-91 66993 up) (Composed of - 1 PLUG 304 908 R1 2 RETAINER 304 916 R11 2 RING 272 623 R1 2 RING 304 917 R1 1 ROLLER 272 614 R91 1 SHAFT 304 915 R91 2 WASHER 53 369 D)
18	272 612 R91	ROLLER AND SHAFT ASSEMBLY, track (single flange) (order 272 647 R92) (4) (TD-91 60301 to 66992)
19	304 912 R91	ROLLER and SHAFT ASSEMBLY, track (double flange) (4) (TD-91 66993 up) (Composed of - 1 PLUG 304 908 R1 2 RETAINER 304 916 R11 2 RING 272 623 R1 2 RING 304 917 R1 1 ROLLER 272 618 R91 1 SHAFT 304 915 R91 2 WASHER 53 369 D)
19	272 613 R91	ROLLER and SHAFT ASSEMBLY, track double flange) (order 272 648 R92) (4) (TD-91 60301 to 66992)
19	272 618 R91	ROLLER w/BUSHING, track No. 2 and 3 set (double flange) (six required on tractors equipped with double flange roller ATTACHMENT) (4)
20	272 645 R1	BRACKET, track roller shaft inner (8) 1/2NF NUT (14) 1/2NF x 1-3/4" hex-hd. cap SCREW (14) 1/2 x 1-3/8" hex-hd. cap SCREW (2) 1/2" lock WASHER (16)
21	274 915 R1	GASKET, track roller oil seal back-up (16) (TD-91 60301 to 66992)
21	304 814 R1	GASKET, track roller oil seal back-up (16) (TD-91 66993 up)
22	272 624 R1	WASHER, track roller felt (16)
23	53 359 D	WASHER, track roller sealing inner (16)
24	273 868 R91	OIL SEAL w/GASKET, 274 915 R1, track roller (16) (TD-91 60301 to 66992)
24	304 918 R91	OIL SEAL w/GASKET, 304 814 R1, track roller (16) (TD-91 66993 up)
25	272 623 R1	RING, track roller retainer snap (16)
26	272 622 R11	RETAINER, track roller (16) (order 304 916 R11 and 304 917 R1) (TD-91 60301 to 66992)
26	304 916 R11	RETAINER, track roller (16) (TD-91 66993 up)
27	304 917 R1	"O" RING, track roller (.065" thick x 3.444") (16) (TD-91 66993 up)
28	53 369 D	WASHER, track roller thrust (16)
29	53 372 DX	BUSHING, track roller (set of two) (8)
30	272 614 R91	ROLLER w/BUSHING SET, track No. 1 and 4 (single flange) (4)
31	53 370 DB	SHAFT, track roller (8) (TD-91 60301 to 66992)
31	304 915 R91	SHAFT, track roller (8) (TD-91 66993 up)
32	272 646 R1	BRACKET, outer track roller shaft (8) (TD-91 60301 to 66992) 1/2NF NUT (16) 1/2NF x 1-3/4" hex-hd. cap SCREW (16) 1/2" lock WASHER (16)

REF. NO.	PART NUMBER	DESCRIPTION

TRACK FRAME, SPRING, RETAINER, TRACK IDLER AND ROLLERS (TD-91) (4 Roller) - Continued

32	272 645 R1	BRACKET, track roller shaft, outer (8) (TD-91 66993 up)
33	37 290 D	FITTING, track roller lubrication (optional with 17 829 DA) (8) (TD-91 60301 to 66992)
33	17 829 DA	FITTING, track roller lubrication (optional with 37 290 D) (8) (TD-91 60301 to 66992)
33	304 908 R1	PLUG, track roller shaft lubrication (8) (TD-91 66993 up)
	266 071 R1	BOLT, track frame and track spring guide (short) (RH and LH) (8)
	266 072 R1	BOLT, track frame and track spring guide (long) (RH and LH) (4)
	277 921 R1	BOLT, track spring retainer (rear) (RH and LH) (will work for 273 948 R1) (12)
	273 326 R1	DOWEL, rear track spring retainer (4)
	274 915 R1	GASKET, track roller oil seal back-up (service for 273 868 R91) (16)
	274 913 R91	PACKAGE, track roller oil seal leather washer field service (consists of two leather WASHERS) (service for 273 868 R91 and 304 918 R91) (8)

EXTENDED TRACK FRAME AND RIGID EXTENDED TRACK FRAME (T-61 and TD-61) (5 Roller)

-178-

TRACK DRIVE

REF. NO.	PART NUMBER	DESCRIPTION

TRACK FRAME, SPRING, RETAINER, TRACK IDLER AND ROLLERS (TD-91) (4 Roller) - Continued

	272 647 R92	PACKAGE, track roller and shaft field service (single flange) (will work for 272 612 R91) (See NOTE) (4) (TD-91 60301 to 66992) (Composed of - 2 BRACKET 272 645 R1 1 ROLLER and SHAFT 304 911 R91 2 SEAL 304 918 R91 2 WASHER 53 359 D 2 WASHER 272 624 R1)
	272 648 R92	PACKAGE, track roller and shaft field service (double flange) (will work for 272 613 R91) (See NOTE) (4) (TD-91 60301 to 66992) (Composed of - 2 BRACKET 272 645 R1 1 ROLLER and SHAFT 304 912 R91 2 SEAL 304 918 R91 2 WASHER 53 359 D 2 WASHER 272 624 R1)
	63 265 D	STUD, track frame diagonal brace flange (8) NOTE - When PACKAGE, 272 647 R92 or 272 648 R92 are ordered, one each of NOZZLE, 304 909 R91 and WRENCH, 304 910 R1 are required.

EXTENDED TRACK FRAME AND RIGID EXTENDED TRACK FRAME (T-61 and TD-61) (5 Roller) - Continued

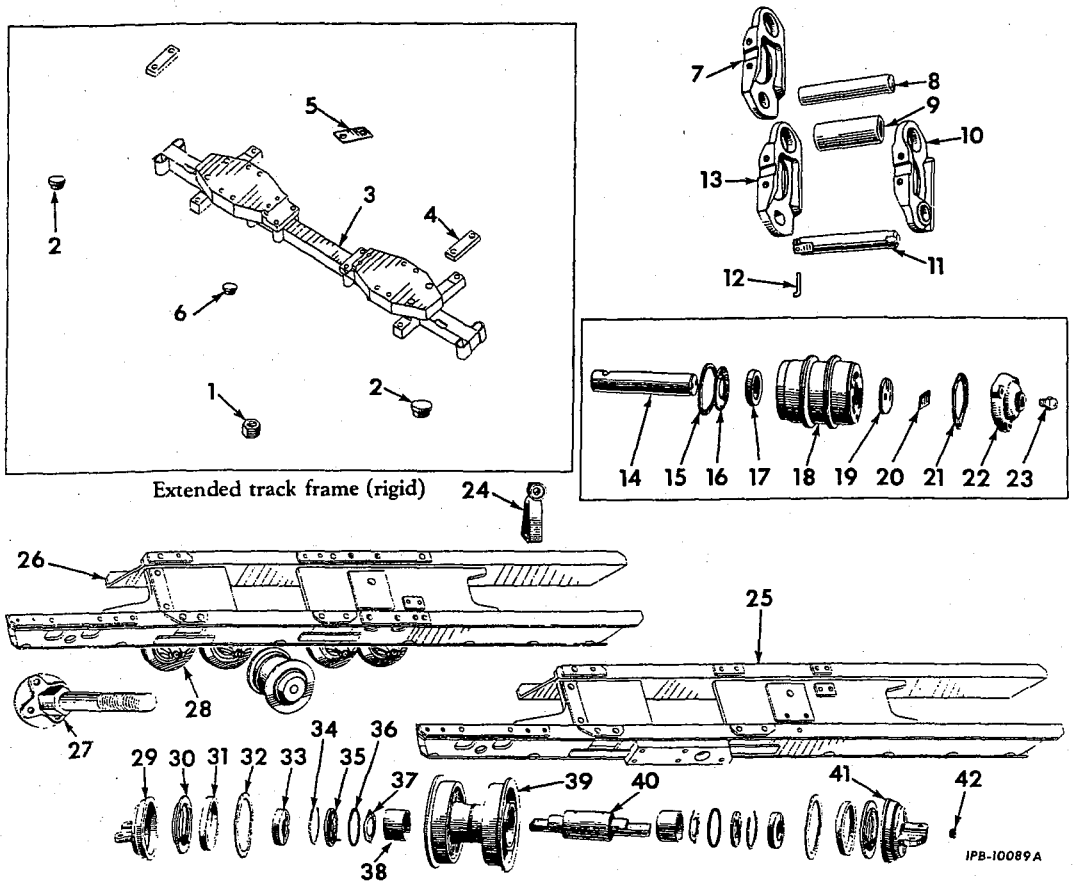

Extended track frame (rigid)

PRINTED IN UNITED STATES OF AMERICA

TRACK DRIVE

REF. NO.	PART NUMBER	DESCRIPTION

EXTENDED TRACK FRAME AND RIGID EXTENDED TRACK FRAME (T-61 and TD-61) (5 Roller) - Continued

⊗ - KEY TO UNITS
A - Service Parts for Extended Track Frame (rigid) (less shoes) (wide gage) (equipment combinations only)
B - Service Parts for Extended Track Frame (less shoes) (wide gage)

⊗ Letters of these units correspond with those shown following the description of the parts in the list below and identifies the unit for which the part is used. Items without letters after the description indicates the part is used for all units.

REF. NO.	PART NUMBER	DESCRIPTION
1	45 293 D	NUT, rigid track frame cross bar stud (8 for Unit A) (TD-61 38951 to 40654)
2	59 509 D	BUTTON, rigid track frame cross bar end (2 for Unit B) (TD-61 38951 to 40654)
3	267 138 R14	BAR, cross rigid track frame (Unit A)
4	269 540 R1	BAR, cross, clamp rigid track frame (2 for Unit A)
	281 095 R1	SHIM, rigid track frame cross bar (heavy) (X for Unit A)
	281 096 R1	SHIM, rigid track frame cross bar (medium) (X for Unit A)
5	281 097 R1	SHIM, rigid track frame cross bar (light) (X for Unit A) 1/2NF x 1-1/2" hex-hd. cap SCREW (to fasten shims to mounting pad) (4 for Unit A) 1/2" lock WASHER (4)
6	59 508 D	BUTTON, cross bar center (Unit A) (TD-61 38951 to 40654)
7	263 938 R1	LINK, RH track (70)
8	263 943 R1	PIN, track link (70)
9	263 941 R1	BUSHING, track link (70)
9	263 942 R1	BUSHING, track master link (2)
10	263 937 R1	LINK, LH track (70)
11	263 944 R1	PIN, track master link (2)
12	263 945 R1	WIRE, track master link pin locking (2)
13	263 939 R1	LINK, LH track master (2)
13	263 940 R1	LINK, RH track master (2)
14	46 933 D	SHAFT, front track idler (2 for Unit B)
14	273 931 R1	SHAFT, front track idler (2 for Unit A)
15	53 335 D	WASHER, track idler felt (outer) (2)
	47 334 D	WASHER, track idler felt (inner) (2)
17	273 571 R91	OIL SEAL, track idler (2)
18	8 400 D	IDLER, track (2)

TRACK DRIVE

REF. NO.	PART NUMBER	DESCRIPTION

EXTENDED TRACK FRAME AND RIGID EXTENDED TRACK FRAME (T-61 and TD-61) (5 Roller) - Continued

REF. NO.	PART NUMBER	DESCRIPTION
19	41 431 D	WASHER, track idler thrust (2) 1/2NF x 7/8" hex-hd. cap SCREW (4)
20	35 089 DA	LOCK, track idler thrust washer cap screw (2)
21	46 932 D	GASKET, track idler cap (2)
22	6 510 D	CAP, track idler (2) 3/8 x 1-1/2" hex-hd. cap SCREW (6) 3/8" lock WASHER (6)
23	37 290 D	FITTING, track idler lubrication (optional with 17 829 DA) (Lincoln 5750) (2)
23	17 829 DA	FITTING, track idler lubrication (optional with 37 290 D)(Alemite 1823) (2)
24	60 374 DA	BRACKET, front track idler (2) 1/2NF x 3-1/4" hex-hd. cap SCREW (2) 1/2 x 1" hex-hd. cap SCREW (8) 1/2NF NUT (2) 1/2" lock WASHER (10)
25	273 315 R91	FRAME, LH track (extended) (together with two DOWEL, 273 326 R1 will work for 267 725 R92) (5 roller) (Unit B)
25	273 316 R91	FRAME, RH track (extended) (together with two DOWEL, 273 326 R1 will work for 267 726 R92) (5 roller) (Unit B)
26	273 317 R91	FRAME, LH track (rigid extended) (together with two DOWEL, 273 326 R1 will work for 267 735 R92) (5 roller) (Unit A)
26	273 318 R91	FRAME, RH track (rigid extended) (together with two DOWEL, 273 326 R1 will work for 267 736 R92) (5 roller) (Unit A)
27	60 371 DD	ADJUSTER, front idler (2)
28	272 625 R91	ROLLER w/SHAFT ASSEMBLY, track (order 272 642 R92) (2) (TD-61 39851 to 41355)
28	304 900 R91	ROLLER w/SHAFT ASSEMBLY, track (2) (TD-61 41356 up) (Composed of - 2 RETAINER 304 905 R11 1 PLUG 304 908 R1 2 RING 272 637 R1 2 RING 304 906 R1 1 ROLLER 272 627 R91 1 SHAFT 304 904 R91 2 WASHER 53 349 D)
29	272 640 R1	BRACKET, inner track roller shaft (2) 1/2 x 1-1/4" hex-hd. cap SCREW (4) 1/2" lock WASHER (4)
30	274 914 R1	GASKET, track roller oil seal back-up (4) (TD-61 38951 to 41355)
30	304 816 R1	GASKET, track roller oil seal back-up (4) (TD-61 41356 up)

X - As Required

REF. NO.	PART NUMBER	DESCRIPTION

EXTENDED TRACK FRAME AND RIGID EXTENDED TRACK FRAME (T-61 and TD-61) (5 Roller) - Continued

31	272 639 R1	WASHER, center track roller felt (4)
32	53 339 D	WASHER, inner sealing track roller (4)
33	273 867 R91	OIL SEAL w/GASKET, 274 914 R1, track roller (4) (TD-61 38951 to 41355)
33	304 907 R91	OIL SEAL w/GASKET, 304 816 R1, track roller (4) (TD-61 41356 up)
34	272 637 R1	RING, center track roller snap (4)
35	272 635 R11	RETAINER w/PIN, track roller (order 304 905 R11 and 304 906 R1) (4) (TD-61 38951 to 41355)
35	304 905 R11	RETAINER w/PIN, track roller (4) (TD-61 41356 up)
36	304 906 R1	"O" RING, track roller (.065" thick x 3.098") (2) (TD-61 41356 up)
37	53 349 D	WASHER, track roller thrust (4)
38	45 242 DX	BUSHING SET, track roller (2)
39	272 627 R91	ROLLER w/BUSHING, track (single flange) (2)
40	53 350 DB	SHAFT, track roller (2) (TD-61 38951 to 41355)
40	304 904 R91	SHAFT, track roller (2) (TD-61 41356 up)
41	272 640 R1	BRACKET, track roller shaft outer (2) (TD-61 41356 up)
41	272 641 R1	BRACKET, track roller shaft outer (2) (TD-61 38951 to 41355) 1/2 x 1-1/4" hex-hd. cap SCREW (4) 1/2" lock WASHER (4)
42	37 290 D	FITTING, track roller lubrication (optional with 17 829 DA) (Lincoln 5750) (2) (TD-61 38951 to 41355)
42	17 829 DA	FITTING, track roller lubrication (optional with 37 290 D) (Alemite 1823) (2) (TD-61 38951 to 41355)
42	304 908 R1	PLUG, track roller shaft lubricator (2) (TD-61 41356 up)
	273 418 R1	BOLT, track frame cross bar, long (4 for Unit A) (2 for Unit B)
	269 533 R2	BOLT, short track frame cross bar (4 for Unit A)
	41 445 D	BOLT, rigid cross bar mounting pad dowel (4 for Unit A)
	104 940	CORK, No. 4 5/8" dia. x 13/16" long (2)
	273 326 R1	DOWEL, rear track spring retainer (2)
	273 352	FITTING, track frame guide roller (Alemite 1606 B) (will work for 109 357) (2 for Unit B)
		NUT, 7/8" (4 for Unit A)
	274 912 R91	PACKAGE, track roller oil seal leather washer field service (consists of two leather WASHER) (for service on 273 867 R91 and 304 907 R91) (2)

-180-

TRACK DRIVE

REF. NO.	PART NUMBER	DESCRIPTION

EXTENDED TRACK FRAME AND RIGID EXTENDED TRACK FRAME (T-61 and TD-61) (5 Roller) - Continued

272 642 R92	PACKAGE, track roller and shaft field service (single flange) (will work for 272 625 R91) (See NOTE) (2) (TD-61 38951 to 41355) (Composed of - 2 BRACKET 272 640 R1 1 ROLLER and SHAFT 304 900 R91 2 SEAL 304 907 R91 2 WASHER 53 339 D 2 WASHER 272 639 R1)	
103 866	PLUG, front track idler cap pipe (2 for Unit A)	
	SCREW, 1/2 x 1" hex-hd. cap (for sprocket SHIELD, 53 536 DAX) (4) SCREW, 1/2 x 1-1/4" hex-hd. cap (for 272 640 R1 in standard unit) (32)	
267 141 R1	STUD, rigid track frame cross bar (8 for Unit A) (TD-61 38951 to 40654)	
263 952 R91	TRACK ASSEMBLY (5 roller) (less shoes) (2) (Composed of - 35 BUSHING 263 941 R2 1 BUSHING 263 942 R2 35 LINK 263 937 R1 35 LINK 263 938 R1 1 LINK 263 939 R1 1 LINK 263 940 R1 35 PIN 263 943 R1 1 PIN 263 944 R1 1 WIRE 263 945 R1)	
	WASHER, 1/2" lock (for 272 641 R1 in standard unit) (32)	

NOTE - When PACKAGE, 272 642 R92 is ordered, NOZZLE, 304 909 R91 and WRENCH, 304 910 R1 are required.

REF. NO.	PART NUMBER	DESCRIPTION

EXTENDED TRACK FRAME AND RIGID EXTENDED TRACK FRAME (TD-91) (5 Roller)

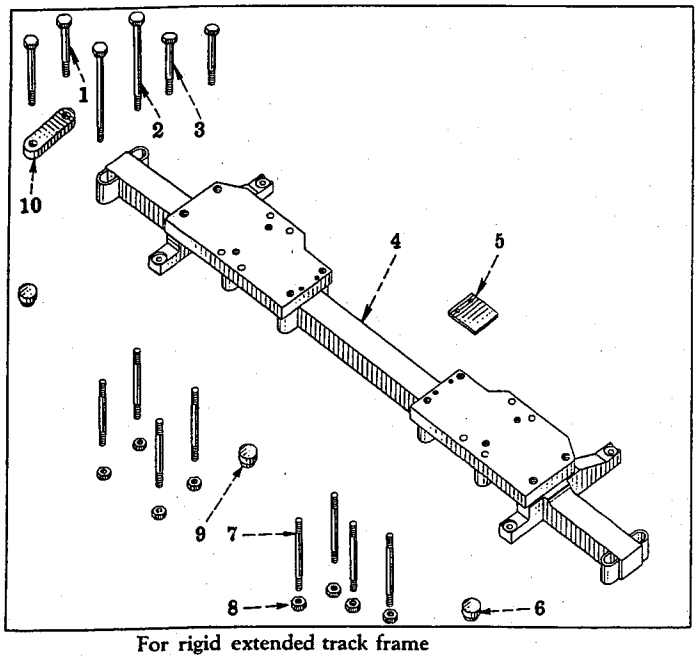

For rigid extended track frame

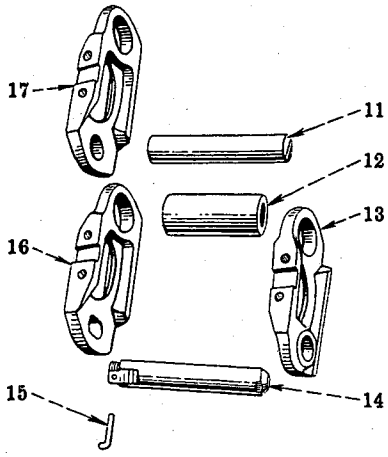

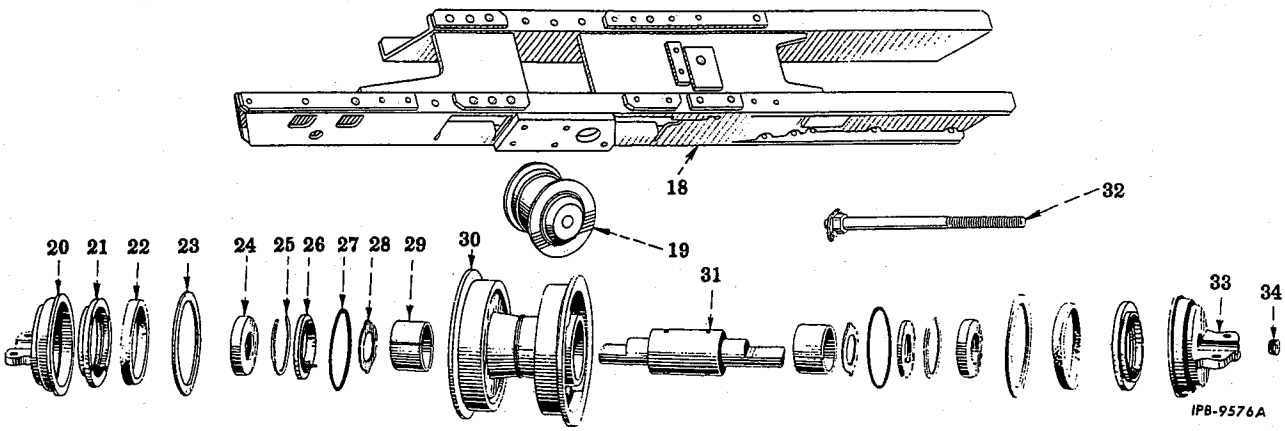

-181-

TRACK DRIVE

REF. NO.	PART NUMBER	DESCRIPTION

EXTENDED TRACK FRAME AND RIGID EXTENDED TRACK FRAME (TD-91) (5 Roller) - Continued

(X) - KEY TO UNITS
Service Parts For -
A - Rigid Extended Track Frame (less shoes) (wide gage)
B - Extended Track Frame (less shoes) (wide gage)
C - Rigid Extended Track Frame (less shoes) (wide gage) (Used on equipment combinations with large diameter front idler ATTACHMENT, 277 099 R91) (TD-9-424-2)

(X) Letters of these units correspond with those shown following the description of the parts in the list below and identifies the unit for which the part is used. Items without letters after the description indicates the part is used for all units.

	269 533 R2	BOLT, track frame cross bar (short) (4 for Unit A and C)
2	273 418 R1	BOLT, track frame cross bar (long) (4 for Unit A and C)
3	41 445 D	BOLT, rigid cross bar mounting pad dowel (4 for Unit A and C) 7/8" NUT (4 for Unit A and C)
4	281 093 R14	BAR, cross, rigid track frame (Unit A and C)
5	281 095 R1	SHIM, rigid track frame cross bar (heavy) (2 for Unit A and C)
5	281 096 R1	SHIM, rigid track frame cross bar (medium) (X for Unit A and C)
5	281 097 R1	SHIM, rigid track frame cross bar (light) (X for Unit A and C) 1/2" lock WASHER (4) 1/2 x 1" hex-hd. cap SCREW (4 for Unit A and C) (to fasten shim to mounting pad) (4)
6	59 523 D	BUTTON, rigid cross bar end (2 for Unit A and C) X - As Required

PRINTED IN UNITED STATES OF AMERICA

REF. NO.	PART NUMBER	DESCRIPTION
		EXTENDED TRACK FRAME AND RIGID EXTENDED TRACK FRAME (TD-91) (5 Roller) - Continued
7	269 135 R1	STUD, rigid track frame cross bar (8 for Unit A and C)
8	41 842 D	NUT, rigid track frame cross bar stud (*) (8 for Unit A and C)
9	59 522 D	BUTTON, rigid track frame cross bar (center) (Unit A and C)
10	63 987 DA	CLAMP, rigid track frame cross bar (2 for Unit A and C)
11	263 975 R1	PIN, track link (70 for Unit A and B) (72 for Unit C)
12	263 973 R2	BUSHING, track link (70 for Unit A and B) (72 for Unit C)
12	263 974 R2	BUSHING, track master link (2)
13	263 969 R1	LINK, LH track (70 for Unit A and B) (72 for Unit C)
14	263 976 R1	PIN, track master link (2)
15	263 945 R1	WIRE, track master link pin locking (2)
16	263 971 R1	LINK, LH track master (2)
16	263 972 R1	LINK, RH track master (2)
17	263 970 R1	LINK, RH track (70 for Unit A and B) (72 for Unit C)
18	273 337 R91	FRAME, LH track (together w/two PIN, 273 326 R1 will work for 267 860 R92) (5 roller) (Unit B)
18	273 338 R91	FRAME, RH track (together w/two PIN, 273 326 R1 will work for 267 861 R92) (5 roller) (Unit B)
18	273 339 R91	FRAME, LH track (together w/two PIN, 273 326 R1 will work for 267 870 R92) (5 roller) (Unit A and C)
18	273 340 R91	FRAME, RH track (together w/two PIN, 273 326 R1 will work for 267 871 R92) (5 roller) (Unit A and C)
	104 938	CORK, No. 2, 1/2" dia. x 11/16" long (4)
19	304 911 R91	ROLLER AND SHAFT ASSEMBLY, track (single flange) (2) (TD-91 66993 up) (Composed of - 1 PLUG 304 908 R1; 2 RETAINER 304 916 R11; 2 RING 272 623 R1; 2 RING 304 917 R1; 1 ROLLER 272 614 R91; 1 SHAFT 304 915 R91; 2 WASHER 53 369 D)
19	272 612 R91	ROLLER AND SHAFT ASSEMBLY, track (single flange) (order 272 647 R92) (2) (TD-91 60301 to 66992)
20	272 645 R1	BRACKET, track roller shaft inner (2) 1/2 x 1-3/8" hex-hd. cap SCREW (4) 1/2" lock WASHER (4)
21	274 915 R1	GASKET, track roller oil seal back-up (4) (TD-91 60301 to 66992)
21	308 814 R1	GASKET, track roller oil seal back-up (4) (TD-91 66993 up)
22	272 624 R1	WASHER, track roller felt (4)
23	53 359 D	WASHER, track roller sealing (4)
24	273 868 R91	OIL SEAL w/GASKET, 274 915 R1, track roller (4) (TD-91 60301 to 66992)
24	304 918 R91	OIL SEAL w/GASKET, 304 814 R1, track roller (4) (TD-91 66993 up)
25	272 623 R1	RING, track roller retainer snap (4)

REF. NO.	PART NUMBER	DESCRIPTION
		EXTENDED TRACK FRAME AND RIGID EXTENDED TRACK FRAME (TD-91) (5 Roller) - Continued
26	272 622 R11	RETAINER, track roller (order 304 916 R11 and 304 917 R1) (4) (TD-91 60301 to 66992)
26	304 916 R11	RETAINER, track roller (4) (TD-91 66993 up)
27	304 917 R1	"O" RING, track roller (.065" thick x 3.344") (4) (TD-91 66993 up)
28	53 369 D	WASHER, track roller thrust (4)
29	53 372 DX	BUSHING SET, track roller (2)
30	272 614 R91	ROLLER w/BUSHING, track (single flange)
31	53 370 DB	SHAFT, track roller (2) (TD-91 60301 to 66992)
31	304 915 R91	SHAFT, track roller (2) (TD-91 66993 up)
32	63 996 DB	ADJUSTER, front idler (not large diameter front idler) (2 for Unit A and B)
33	272 645 R1	BRACKET, track roller shaft outer (2) (TD-91 66993 up)
33	272 646 R1	BRACKET, track roller shaft outer (2) (TD-91 60301 to 66992) 1/2 x 1-3/8" hex-hd. cap SCREW (4) 1/2" lock WASHER (4)
34	37 290 D	FITTING, track roller lubrication (optional with 17 829 DA) (2) (TD-91 60301 to 66992)
34	17 829 DA	FITTING, track roller lubrication (optional with 37 290 D) (2) (TD-91 60301 to 66992)
34	304 908 R1	PLUG, track roller shaft lubrication (2) (TD-91 66993 up)
	274 133 R91	CHAIN ASSEMBLY, track (37 links) (2 for Unit C) (Composed of - 36 BUSHING 263 973 R2; 1 BUSHING 263 974 R2; 36 LINK 263 969 R1; 36 LINK 263 970 R1; 1 LINK 263 971 R1; 1 LINK 263 972 R1; 1 WIRE 263 945 R1; 36 PIN 263 975 R1; 1 PIN 263 976 R1)
	263 982 R91	CHAIN ASSEMBLY, track (36 links) (2 for Unit A and B) (Composed of - 35 BUSHING 263 973 R2; 1 BUSHING 263 974 R2; 35 LINK 263 969 R1; 35 LINK 263 970 R1; 1 LINK 263 971 R1; 1 LINK 263 972 R1; 35 PIN 263 975 R1; 1 PIN 263 976 R1; 1 WIRE 263 945 R1) 1/2 x 1" hex-hd. cap SCREW (used with sprocket SHIELD, 53 539 DA) (4)

(*) - Required for 272 645 R1 and 272 646 R1 in Standard Unit.
X - As Required

REF. NO.	PART NUMBER	DESCRIPTION

EXTENDED TRACK FRAME AND RIGID EXTENDED TRACK FRAME (TD-91) (5 Roller) - Continued

	273 326 R1	DOWEL, rear track spring retainer (4)
	272 647 R92	PACKAGE, track roller and shaft field service (single flange) (will work for 272 612 R91) (See NOTE) (2) (TD-91 60301 to 66992) (Composed of - 2 BRACKET 272 645 R1; 1 ROLLER and SHAFT 304 911 R91; 2 SEAL 304 918 R91; 2 WASHER 53 359 D; 2 WASHER 272 624 R1)

FRONT IDLER
(T-61, TD-61 and TD-91)

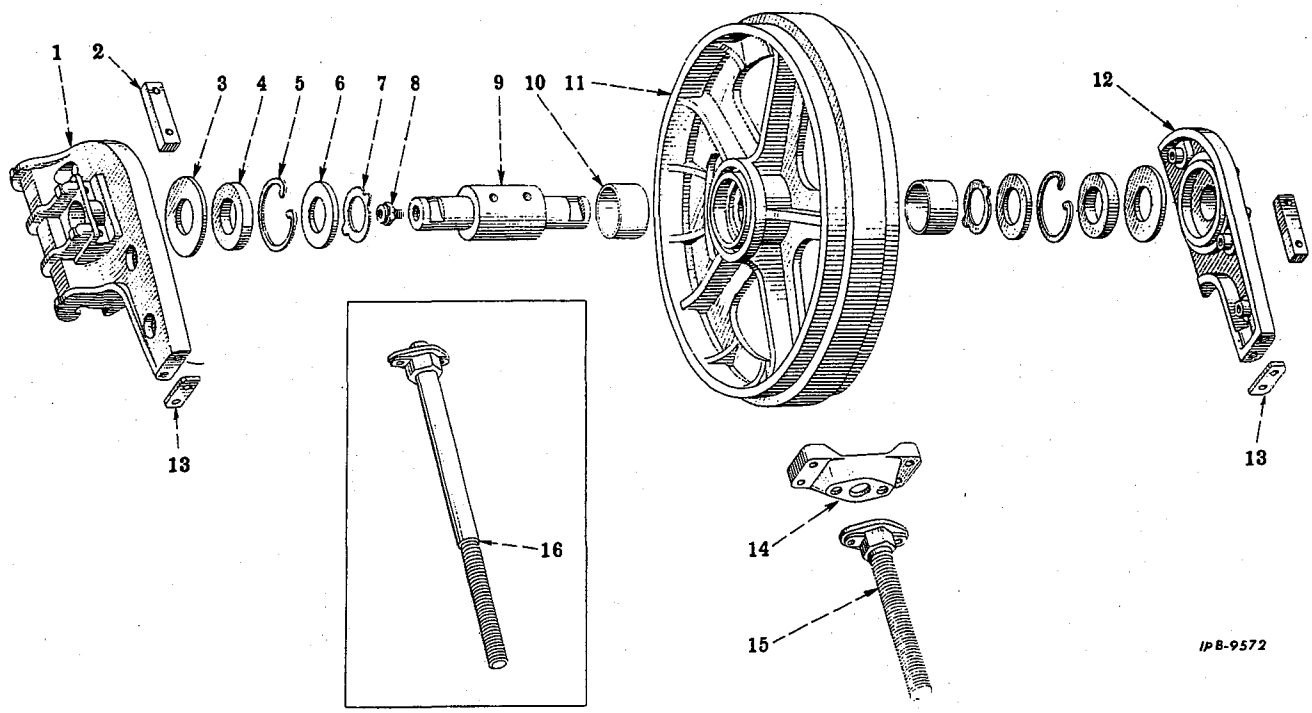

Ⓚ - KEY TO UNITS
A - Service Parts for Front Idler (T-61 and TD-61)
B - Service Parts for Front Idler (TD-91)

Ⓚ Letters of these units correspond with those shown following the description of the parts in the list below and identifies the unit for which the part is used. Items without letters after the description indicates the part is used for all units.

1	263 422 R1	GUIDE, outer front idler (LH and RH) (2 for Unit A)
1	263 436 R1	GUIDE, outer front idler (LH and RH) (2 for Unit B)
2	263 427 R1	CLAMP, front idler shaft (4 for Unit A) 1/2 x 1-5/8" hex-hd. cap SCREW (9) 1/2" lock WASHER (8)
2	263 441 R1	CLAMP, front idler shaft (4 for Unit B) 9/16 x 1-7/8" hex-hd. cap SCREW (8) 9/16" lock WASHER (8)
3	53 360 D	WASHER, front idler felt (4 for Unit A)
3	263 417 R1	WASHER, front idler felt (4 for Unit B)
4	273 566 R91	OIL SEAL, front idler (4 for Unit A)
4	273 577 R91	OIL SEAL, front idler (4 for Unit B)

-183-

TRACK DRIVE

REF. NO.	PART NUMBER	DESCRIPTION

EXTENDED TRACK FRAME AND RIGID EXTENDED TRACK FRAME (TD-91) (5 Roller) - Continued

	274 913 R91	PACKAGE, track roller oil seal leather washer field service (consists of two leather WASHERS) (for service on 273 868 R91 and 304 918 R91) (8) 1/2 x 1-3/8" hex-hd. cap SCREW (32)(*) 1/2" lock WASHER (32)(*)

NOTE - When PACKAGE, 272 647 R92 is ordered, one each of NOZZLE, 304 909 R91 and WRENCH, 304 910 R1 are required.
(*) - Required for 272 645 R1 and 272 646 R1 in Standard Unit.

FRONT IDLER
(T-61, TD-61 and TD-91) - Continued

5	60 573 D	RING, front idler retainer snap (4 for Unit A)
5	263 416 R1	RING, front idler retainer snap (4 for Unit B)
6	53 362 D	RETAINER, front idler (4 for Unit A)
6	263 415 R2	RETAINER, front idler (4 for Unit B)
7	53 369 D	WASHER, thrust front idler (set of two) (4 for Unit A)
7	263 414 R21	WASHER, thrust front idler (set of two) (4 for Unit B)
8	37 290 D	FITTING, front idler lubrication (Lincoln No. 5750) (optional with 17 829 DA) (2)
8	17 829 DA	FITTING, front idler lubrication (Alemite No. 1823) (optional with 37 290 D) (2)
9	263 424 R92	SHAFT, front idler (2 for Unit A)
9	269 411 R91	SHAFT, front idler (2 for Unit B)
10	53 400 DX	BUSHING, front idler (set of two) (2 for Unit A)
10	263 434 R11	BUSHING, front idler (set of two) (2 for Unit B)
11	263 421 R11	IDLER w/two BUSHING and two OIL SEAL, 273 566 R91, front (not large diameter front idler) (2 for Unit A)
11	272 135 R11	IDLER w/two BUSHING and two OIL SEAL, 273 566 R91, front (large diameter front idler) (2 for Unit A)

PRINTED IN UNITED STATES OF AMERICA

REF. NO.	PART NUMBER	DESCRIPTION

FRONT IDLER
(T-61, TD-61 and TD-91) - Continued

11	263 432 R11	IDLER w/two BUSHING and two OIL SEAL, 273 577 R91, front (not large diameter front idler) (2 for Unit B)
11	272 136 R11	IDLER w/two BUSHING and two OIL SEAL, 273 577 R91, front (large diameter front idler) (2 for Unit B)
12	263 423 R1	GUIDE, front idler (outer RH and inner LH) (2 for Unit A)
12	263 437 R1	GUIDE, front idler (outer RH and inner LH) (2 for Unit B)
13	273 476 R1	SPACER, front idler guide (used with large diameter front idler attachments) (4 for Unit A)
13	273 477 R1	SPACER, front idler guide (used with ATTACHMENTS, 272 139 R91) (4 for Unit B)
14	53 378 DC	PLATE, cross front idler guide (2 for Unit A) 1/2 x 1-3/4" hex-hd. cap SCREW (not for large diameter front idler) (8) 1/2 x 2-1/2" hex-hd. cap SCREW (large diameter front idler) 1/2" lock WASHER (8)
14	53 398 DA	PLATE, cross front idler guide (2 for Unit B) 5/8 x 1-3/4" hex-hd. cap SCREW (not large diameter front idler) (8) 5/8 x 2-3/4" hex-hd. cap SCREW (large diameter front idler) (8)
15	45 800 DE	ADJUSTER, front idler (not extended track frame or large diameter front idler) (2 for Unit A) 1/2 x 1-1/4" hex-hd. cap SCREW (4) 1/2" lock WASHER (4)
15	48 040 DB	ADJUSTER, front idler (not extended track frame or large diameter front idler) (2 for Unit B) 1/2 x 1-1/4" hex-hd. cap SCREW (4) 1/2" lock WASHER (4)
16	273 639 R1	ADJUSTER, front idler (large diameter front idler) (used with ATTACHMENT, 273 638 R91) (2 for Unit A)
16	273 642 R1	ADJUSTER, front idler (large diameter front idler) (part of ATTACHMENT, 272 139 R91) (2 for Unit B)
16	277 088 R1	ADJUSTER, front idler (large diameter front idler) (part of ATTACHMENT, 277 099 R91) (2 for Unit B)
	273 638 R91	ATTACHMENT, large diameter front idler (for tractor equipped with extended track frame) (See NOTE) (Unit A) (Composed of - 2 ADJUSTER 273 639 R1 2 BUSHING 53 400 DX 2 IDLER 272 135 R11 4 SEAL 273 566 R91 4 SPACER 273 476 R1)
	272 139 R91	ATTACHMENT, large diameter front idler (for tractors equipped with extended track frame) (also for tractors as used in equipment combinations having 36 links per track) (See NOTE) (Unit B) (Composed of - 2 ADJUSTER 273 642 R1 2 BUSHING 263 434 R11 2 IDLER 272 136 R11 4 SEAL 273 577 R91 4 SPACER 273 477 R91)

REF. NO.	PART NUMBER	DESCRIPTION

FRONT IDLER
(T-61, TD-61 and TD-91) - Continued

	277 099 R91	ATTACHMENT, large diameter front idler (for equipment combination TD-9 424-2 with 37 links per track) (Unit B) (Composed of - 2 ADJUSTER 277 088 R1 2 BUSHING 263 434 R11 2 IDLER 272 136 R11 4 SPACER 273 477 R91)
	265 970 R1	NUT, front idler adjuster lock (2 for Unit A)
	266 068 R1	NUT, front idler adjuster lock (2 for Unit B)

FRONT IDLER SHIELD
(T-61, TD-61 and TD-91)

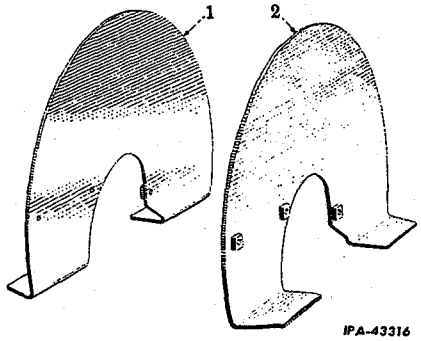

⊗- KEY TO UNITS
A - 263 431 R91 ATTACHMENT, front idler shield (T-61 and TD-61) (See NOTE)
B - 263 420 R91 ATTACHMENT, front idler shield (TD-91) (See NOTE)

⊗ Letters of these units correspond with those shown following the description of the parts in the list below and identifies the unit for which the part is used. Items without letters after the description indicates the part is used for all units.

1	263 429 R11	SHIELD, LH front idler outer (Unit A) 3/8NF x 1-1/4" hex-hd. cap SCREW (3) 3/8" lock WASHER (3)
1	263 418 R11	SHIELD, LH front idler, outer (Unit B) 7/16NF x 1-1/2" hex-hd. cap SCREW (3) 7/16" lock WASHER (3)
1	263 429 R11	SHIELD, RH front idler, inner (Unit A) 3/8NF x 1-1/4" hex-hd. cap SCREW (3) 3/8" lock WASHER (3)
1	263 418 R11	SHIELD, RH front idler, inner (Unit B) 7/16NF x 1-1/2" hex-hd. cap SCREW (3) 7/16" lock WASHER (3)
2	263 430 R11	SHIELD, RH front idler outer (Unit A) 3/8NF x 1-1/4" hex-hd. cap SCREW (3) 3/8" lock WASHER (3)
2	263 419 R11	SHIELD, RH front idler outer (Unit B) 7/16NF x 1-1/2" hex-hd. cap SCREW (3) 7/16" lock WASHER (3)
2	263 430 R11	SHIELD, LH front idler inner (Unit A) 3/8NF x 1-1/4" hex-hd. cap SCREW (3) 3/8" lock WASHER (3)
2	263 419 R11	SHIELD, LH front idler inner (Unit B) 7/16NF x 1-1/2" hex-hd. cap SCREW (3) 7/16" lock WASHER (3)

NOTE - Factory Application - Order on Machine Order Form.
Field Application - Order through Regular Service Parts Channels.

TRACK DRIVE

REF. NO.	PART NUMBER	DESCRIPTION

TRACK ROLLER SHIELD
(T-61, TD-61 and TD-91)

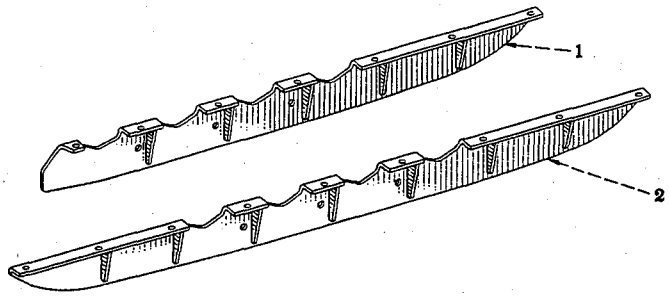

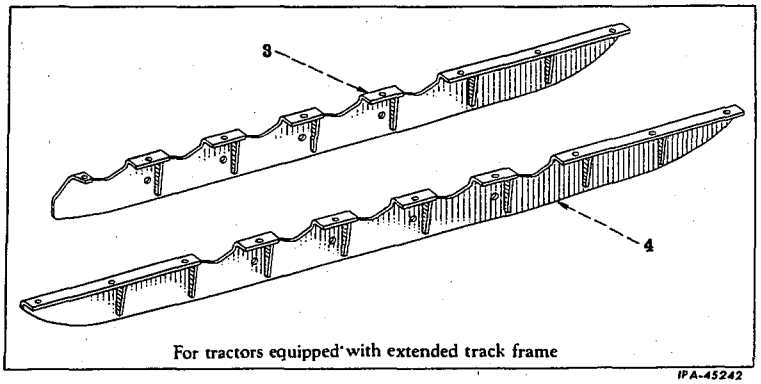

Ⓧ - KEY TO UNITS

A -	267 872 R91	ATTACHMENT, track roller shield (not extended track frame) ⊛ (TD-91)
B -	267 881 R91	ATTACHMENT, track roller shield (extended track frame) ⊛ (TD-91)
C -	267 737 R91	ATTACHMENT, track roller shield (not extended track frame) ⊛ (T-61 and TD-61)
D -	267 748 R91	ATTACHMENT, track roller shield (extended track frame) ⊛ (T-61 and TD-61)

Ⓧ - Letters of these units correspond with those shown following the description of the parts in the list below and identifies the unit for which the part is used. Items without letters after the description indicates the part is used for all units.

1	267 873 R11	SHIELD, LH track roller, inner (Unit A)
1	267 874 R11	SHIELD, RH track roller inner (Unit A) 5/8NF NUT (6) 5/8 x 1-1/4" hex-hd. cap SCREW 5/8NF x 1-3/4" hex-hd. cap SCREW (6) 5/8" lock WASHER (7)
1	267 738 R11	SHIELD, LH track roller inner (Unit C)
1	267 739 R11	SHIELD, RH track roller inner (Unit C) 5/8NF NUT (7) 5/8NF x 1-1/2" hex-hd. cap SCREW (7) 5/8" lock WASHER (7)
2	267 875 R11	SHIELD, LH track roller outer (Unit A)
2	267 876 R11	SHIELD, RH track roller outer (Unit A) 5/8NF NUT (9) 5/8NF x 1-3/4" hex-hd. cap SCREW (9) 5/8" lock WASHER (9)
2	267 740 R11	SHIELD, LH track roller outer (Unit C)
2	267 741 R11	SHIELD, RH track roller outer (Unit C) 5/8NF NUT (7) 5/8NF x 1-1/8" hex-hd. cap SCREW (2) 5/8NF x 1-1/2" hex-hd. cap SCREW (7) 5/8" lock WASHER (7)

TRACK DRIVE

REF. NO.	PART NUMBER	DESCRIPTION

TRACK ROLLER SHIELD
(T-61, TD-61 and TD-91) - Continued

3	267 882 R11	SHIELD, LH track roller inner (Unit B)
3	267 883 R11	SHIELD, RH track roller inner (Unit B) 5/8 x 1-1/4" hex-hd. cap SCREW (8) 5/8" lock WASHER (8)
3	267 749 R11	SHIELD, LH track roller inner (Unit D)
3	267 750 R11	SHIELD, RH track roller inner (Unit D) 5/8 x 1-1/8" hex-hd. cap SCREW (8) 5/8" lock WASHER (8)
4	267 884 R11	SHIELD, LH track roller outer (Unit B)
4	267 885 R11	SHIELD, RH track roller outer (Unit B) 5/8 x 1-1/4" hex-hd. cap SCREW (10) 5/8" lock WASHER (10)
4	267 751 R11	SHIELD, LH track roller outer (Unit D)
4	267 752 R11	SHIELD, RH track roller outer (Unit D) 5/8 x 1-1/8" hex-hd. cap SCREW (10) 5/8" lock WASHER (10)
	267 888 R1	BOLT, track roller shield spacer (6 for Unit A) (8 for Unit B)
	267 747 R1	BOLT, track roller shield spacer (6 for Unit C) (8 for Unit D) 3/4NF NUT (6 for Unit A and D) 3/4NF NUT (8 for Unit B and C)
	267 887 R1	SPACER, track roller shield (6 for Unit A) (8 for Unit B)
	267 746 R1	SPACER, track roller shield (6 for Unit C) (8 for Unit D)

⊛ - Factory Application - Order on Machine Order Form.
Field Application - Order through Regular Service Parts Channels.

ATTACHMENT NUMBER ⊗	DESCRIPTION

TRACK SHOES
(T-61 and TD-61)

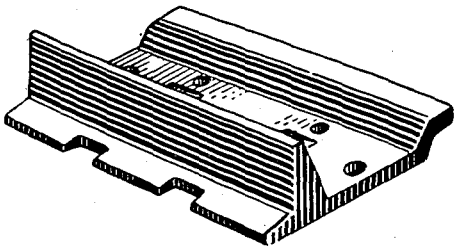

Square corner shoe

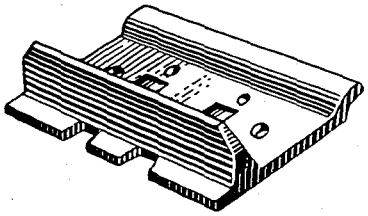

Clipped corner shoe

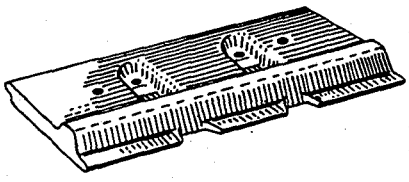

Flat shoe
(Low straight grouser)

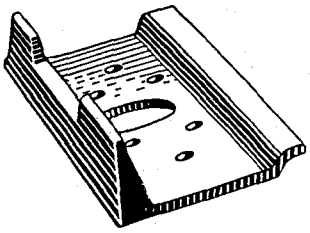

End lug ice grouser and snow shoe

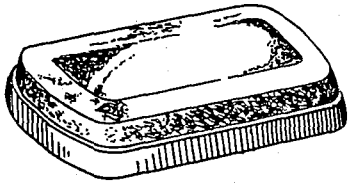

Rubber shoe

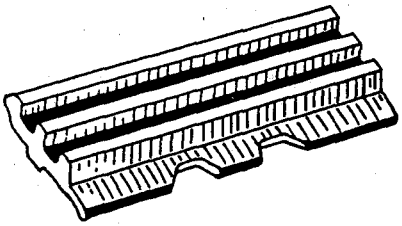

Flat shoe
(3 Grouser)

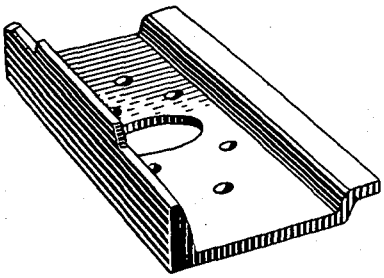

Center lug ice grouser and snow shoe

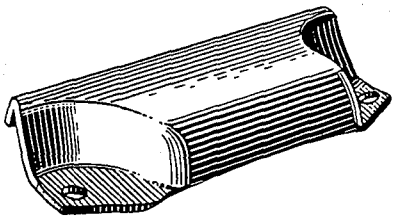

Street plate

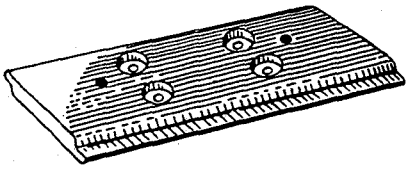

Overlapping flat shoes

IPA-43332A

SQUARE CORNER

53 693 DB	SHOE SET, track (12" track shoe 53 687 DB) (64)
254 794 R91	SHOE SET, track (wide tread) (12" track shoe 53 687 DB) (See NOTE) (72)
57 250 DB	SHOE SET, track (wide tread) (14" track shoe 57 248 DB) (64)
254 795 R91	SHOE SET, track (wide tread) (14" track shoe 57 248 DB) (See NOTE) (72)
53 694 DB	SHOE SET, track (wide tread) (16" track shoe 53 688 DB) (64)
254 796 R91	SHOE SET, track (wide tread) (16" track shoe 53 688 DB) (See NOTE) (72)
53 695 DB	SHOE SET, track (wide tread) (18" track shoe 53 689 DB) (64)
257 723 R91	SHOE SET, track (wide tread) (18" track shoe 53 689 DB) (See NOTE) (72)
53 696 DB	SHOE SET, track (wide tread) (20" track shoe 53 690 DB) (64)
	Included with above -
266 955 R1	BOLT, track shoe (for attachments with 64 shoes) (256)
266 955 R1	BOLT, track shoe (for attachments with 72 shoes) (288)
273 870 R1	NUT, track shoe (hex-type) (for attachments with 64 shoes) ⊛ (256)
273 870 R1	NUT, track shoe (hex-type) (for attachments with 72 shoes) ⊛ (288)

ATTACHMENT NUMBER ⊗	DESCRIPTION

TRACK SHOES
(T-61 and TD-61) - Continued

STAGGERED LUG ICE GROUSER AND SNOW SHOES

57 182 DA	SHOE SET, track (center lug) (12" track shoe 57 179 DA) (32) and (end lug) (12" track shoe 57 180 DA) (32)
255 878 R91	SHOE SET, track (center lug) (12" track shoe 57 179 DA) (See NOTE) (36) and (end lug) (12" track shoe) (36) (See NOTE)
	Included with above -
266 955 R1	BOLT, track shoe (for attachments with 64 shoes) (256)
266 955 R1	BOLT, track shoe (for attachments with 72 shoes) (288)
273 870 R1	NUT, track shoe (hex-type) (for attachments with 64 shoes) ⊛ (256)
273 870 R1	NUT, track shoe (hex-type) (for attachments with 72 shoes) ⊛ (288)

NOTE - For tractors equipped with extended track frame attachments.

⊛ - Square type track shoe bolt NUT, 263 951 R1, also available for service in place of hex-type 273 870 R1.

⊗ - Factory Application - Order on Machine Order Form.
Field Application - Order through Regular Service Parts Channels.

ATTACHMENT NUMBER ⊗	DESCRIPTION

TRACK SHOES
(T-61 and TD-61) - Continued

CLIPPED CORNER

53 705 DC	SHOE SET, (standard) (field application only) (12" track shoes 53 699 DC) (64)
257 724 R92	SHOE SET, track (wide tread) (12" track shoe 53 699 DC) (See NOTE) (72)
57 251 DC	SHOE SET, track shoe (wide tread) (14" track shoe 57 249 DC) (64)
257 725 R92	SHOE SET, track (wide tread) (14" track shoe 57 249 DC) (See NOTE) (72)
53 706 DC	SHOE SET, track (wide tread) (16" track shoe 53 700 DC) (64)
257 726 R92	SHOE SET, track (wide tread) (16" track shoe 53 700 DC) (See NOTE) (72)
53 707 DC	SHOE SET, track (wide tread) (18" track shoe 53 701 DC) (64)
257 727 R92	SHOE SET, track (wide tread) (18" track shoe 53 701 DC) (See NOTE) (72)
53 708 DC	SHOE SET, track (wide tread) (20" track shoe 53 702 DC) (64)

Included with above -

266 955 R1	BOLT, track shoe (for attachments with 64 shoes) (256)
266 955 R1	BOLT, track shoe (for attachments with 72 shoes) (288)
273 870 R1	NUT, track shoe (hex-type) (for attachments with 72 shoes) ⊛ (288)
273 870 R1	NUT, track shoe (hex-type) (for attachments with 64 shoes) ⊛ (256)

FLAT SHOES

254 799 R91	SHOE SET, flat overlapping (wide tread) (12" track shoe 9 065 DA) (See NOTE) (72)
277 505 R91	SHOE SET, flat overlapping (low profile three grouser) (12" track shoe 277 504 R1) (64)
258 869 R91	SHOE SET, flat overlapping (low straight type grouser) (wide tread) (12" track shoe 258 871 R1) (64)
258 870 R91	SHOE SET, flat overlapping (low straight type grouser (wide tread) (12" track shoe 258 871 R1) (See NOTE) (72)
277 506 R91	SHOE SET, flat overlapping (low profile three grouser) (12" track shoe 277 504 R1) (wide tread) (See NOTE) (72)

Included with above -

266 955 R1	BOLT, track shoe (for attachments with 64 shoes) (256)
266 955 R1	BOLT, track shoe (for attachments with 72 shoes) (288)
273 870 R1	NUT, track shoe (hex-type) (for attachments with 64 shoes) ⊛ (256)
273 870 R1	NUT, track shoe (hex-type) (for attachments with 72 shoes) ⊛ (288)

STREET PLATES

254 797 R91	SHOE HALF SET, track (9-1/2" track shoe 29 804 DB) (36)
57 517 D	SHOE HALF SET, track (9-1/2" track shoe 29 804 DB) (32)

Included with above -

5/8NF x 1-1/4" hex-hd. cap SCREW (for attachments with 36 shoes) (72)
5/8NF x 1-1/4" hex-hd. cap SCREW (for attachments with 32 shoes) (64)

5/8NF NUT (for attachments with 36 shoes) (72)
5/8NF NUT (for attachments with 32 shoes) (64)

-187-

TRACK DRIVE

ATTACHMENT NUMBER ⊗	DESCRIPTION

TRACK SHOES
(T-61 and TD-61) - Continued

RUBBER SHOES

255 025 R92	SHOE SET, rubber track (10" track shoe §) (64)

Included with above -

255 024 R1	BASE PLATE, rubber track (64)
266 955 R1	BOLT, track shoe (256)
273 870 R1	NUT, track shoe (hex-type) ⊛ (256)
46 227 D	NUT, track shoe stud (256)
256 021 R1	STUD, track shoe (256)

The following parts are available for service on this attachment.

21 727 DAY	SHOE track w/NUT, 46 227 D and STUD, 256 021 R1 (64)

NOTE - For tractors equipped with extended track frame attachments.
⊛ - Square type track shoe bolt NUT, 263 951 R1, also available for service in place of hex-type 273 870 R1.
⊗ - Factory Application - Order on Machine Order Form.
Field Application - Order through Regular Service Parts Channels.
§ - Not Furnished Separately

ATTACHMENT NUMBER ⊗	DESCRIPTION

TRACK SHOES
(TD-91)

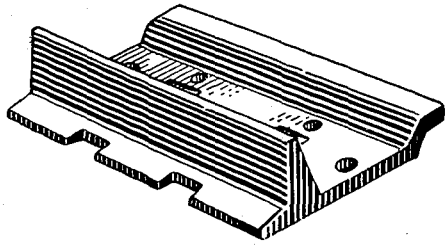

Square corner shoe

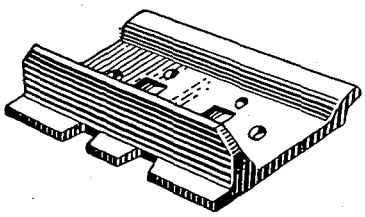

Clipped corner shoe

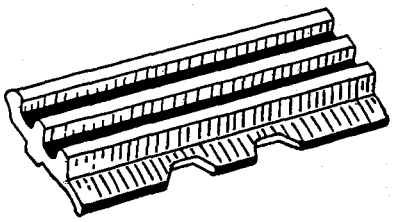

Flat shoe
(3 Grouser)

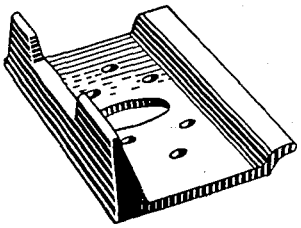

End lug ice grouser and snow shoe

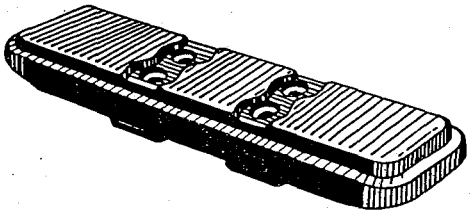

Rubber shoe

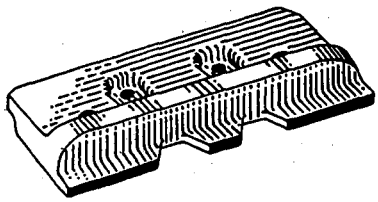

Flat shoe
(Low straight grouser)

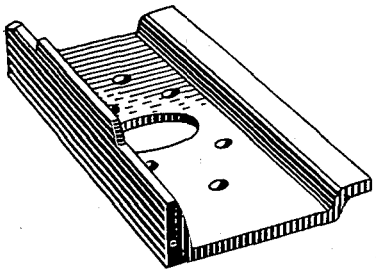

Center lug ice grouser and snow shoe

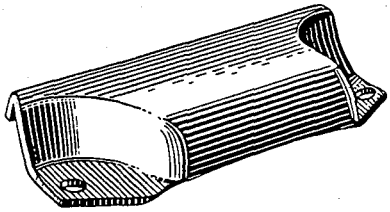

Street plate

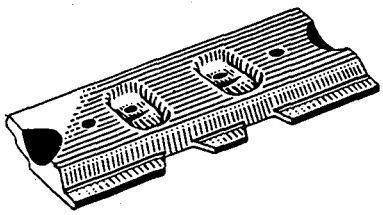

Overlapping flat shoes

IPA-45227A

CLIPPED CORNER

	SHOE, track clipped corner (standard) (13" track shoe 49 471 DC) (66)
49 483 DC	SHOE SET, track (13" track shoe 49 471 DC) † (66)
257 772 R92	SHOE SET, track (wide tread) (13" track shoe 49 471 DC) (See NOTE) (72)
50 314 DC	SHOE SET, track (14" track shoe 50 312 DC) (66)
262 468 R92	SHOE SET, track (wide tread) (14" track shoe 50 312 DC) (See NOTE) (72)
49 484 DC	SHOE SET, track (15" track shoe 49 472 DC) (66)
257 773 R92	SHOE SET, track (wide tread) (15" track shoe 49 472 DC) (See NOTE) (72)
277 021 R91	SHOE SET, track (wide tread) (15" track shoe 49 472 DC) ⊕ (74)
49 485 DC	SHOE SET, track (wide tread) (16" track shoe 49 473 DC) (66)
257 774 R92	SHOE SET, track (wide tread) (16" track shoe 49 473 DC) (See NOTE) (72)
49 486 DC	SHOE SET, track (wide tread) (18" track shoe with 49 474 DC) (66)
257 775 R92	SHOE SET, track (wide tread) (18" track shoe 49 474 DC) (See NOTE) (72)
49 487 DC	SHOE SET, track (wide tread) (20" track shoe 49 475 DC) (66)
257 776 R92	SHOE SET, track (wide tread) (20" track shoe 49 475 DC) (See NOTE) (72)
261 456 R92	SHOE SET, track (wide tread) (22" track shoe 261 452 R2) (66)

-188-

TRACK DRIVE

ATTACHMENT NUMBER ⊗	DESCRIPTION

TRACK SHOES
(TD-91) - Continued

CLIPPED CORNER — Continued

261 457 R92	SHOE SET, track (wide tread) (24" track shoe 261 453 R2) (66)
	Included with above -
267 019 R1	BOLT, track shoe (for attachments with 66 shoes) (264)
267 019 R1	BOLT, track shoe (for attachments with 72 shoes) (288)
267 019 R1	BOLT, track shoe (for attachments with 74 shoes) (296)
273 871 R1	NUT, track shoe (hex-type) (for attachments with 66 shoes) ⊛ (264)
273 871 R1	NUT, track shoe (hex-type) (for attachments with 72 shoes) ⊛ (288)
273 871 R1	NUT, track shoe (hex-type) (for attachments with 74 shoes) ⊛ (296)

NOTE - For tractors equipped with extended frame attachments.

⊛ - Square type track shoe bolt NUT, 263 981 R1, also available for service in place of hex-type 273 871 R1.

⊗ - Factory Application - Order on Machine Order Form.
Field Application - Order through Regular Service Parts Channels.

⊕ - For Equipment Combination TD-9-424-2

† - Field Application Only.

ATTACHMENT NUMBER (X)	DESCRIPTION

TRACK SHOES
(TD-91) - Continued

SQUARE CORNER

49 477 DB	SHOE SET, track (13" track shoe 46 839 DB) (66)
257 770 R91	SHOE SET, track (wide tread) (13" track shoe 46 839 DB) (See NOTE) (72)
50 313 DB	SHOE SET, track (14" track shoe 50 311 DB) (66)
254 803 R91	SHOE SET, track (wide tread) (14" track shoe 50 311 DB) (See NOTE) (72)
49 478 DB	SHOE SET, track (15" track shoe 59 466 DB) (66)
257 771 R91	SHOE SET, track (wide tread) (15" track shoe 49 466 DB) (See NOTE) (72)
49 479 DB	SHOE SET, track (wide tread) (16" track shoe 49 467 DB) (66)
254 804 R91	SHOE SET, track (wide tread) (16" track shoe 49 467 DB) (See NOTE) (72)
49 480 DB	SHOE SET, track (wide tread) (18" track shoe 49 468 DB) (66)
254 805 R91	SHOE SET, track (wide tread) (18" track shoe 49 468 DB) (See NOTE) (72)
49 481 DB	SHOE SET, track (wide tread) (20" track shoe 49 469 DB) (66)
254 806 R91	SHOE SET, track (wide tread) (20" track shoe 49 469 DB) (See NOTE) (72)
261 454 R91	SHOE SET, track (wide tread) (22" track shoe 261 450 R1) (66)

Included with above -

267 019 R1	BOLT, track shoe (for attachments with 66 shoes) (264)
267 019 R1	BOLT, track shoe (for attachments with 72 shoes) (288)
273 871 R1	NUT, track shoe (hex-type) (for attachments with 66 shoes) (*) (264)
273 871 R1	NUT, track shoe (hex-type) (for attachments with 72 shoes) (*) (288)

STREET PLATE

57 526 D	SHOE HALF SET, track (10-3/4" track shoe 29 802 DB) (34)
254 807 R91	SHOE HALF SET, track (10-3/4" track shoe 29 802 DB) (See NOTE) (36)

Included with above -
5/8NF x 1-1/4" hex-hd. cap SCREW (for attachments with 34 shoes) (68)
5/8NF x 1-1/4" hex-hd. cap SCREW (for attachments with 36 shoes) (72)

5/8NF NUT (for attachment with 34 shoes) (68)
5/8NF NUT (for attachment with 36 shoes) (72)

RUBBER SHOE

255 026 R92	SHOE SET, rubber track (12" track shoe §) (66)

Included with above -

5 370 D	BASE PLATE, rubber track (66)
267 019 R1	BOLT, track shoe (264)
32 454 D	NUT, track shoe stud (264)
273 871 R1	NUT, track shoe (*) (264)
256 020 R1	STUD, track shoe (264)

The following parts are available for service on this attachment.

19 589 DBY	SHOE, track w/NUT, 32 454 D and STUD, 256 020 R1 (66)
19 589 DBX	SHOE, track w/STUD, 256 020 R1) (66)

-189-

TRACK DRIVE

ATTACHMENT NUMBER (X)	DESCRIPTION

TRACK SHOES
(TD-91) - Continued

FLAT SHOE

254 981 R91	SHOE SET, flat overlapping (wide tread) (15" track shoe 9 245 DA) (See NOTE) (72)
277 019 R91	SHOE SET, flat overlapping (wide tread) (15" track shoe 9 245 DA) (+) (74)
258 872 R91	SHOE SET, flat, overlapping (low straight grouser) (15" track shoe 258 874 R1) (66)
258 873 R91	SHOE SET, flat, overlapping (low straight grouser) (wide tread) (15" track shoe 258 874 R1) (72)
277 018 R91	SHOE SET, flat overlapping (low straight grouser) (wide tread) (15" track shoe 258 874 R1) (+) (74)
277 508 R91	SHOE SET, flat overlapping (low profile three grouser) (15" track shoe 277 507 R1) (66)
277 509 R91	SHOE SET, flat overlapping (low profile three grouser) (wide tread) (15" track shoe 277 507 R1) (See NOTE) (72)
277 510 R91	SHOE SET, flat overlapping (low profile three grouser) (wide tread) (15" track shoe 277 507 R1) (+) (74)

Included with above -

267 019 R1	BOLT, track shoe (for attachments with 66 shoes) (264)
267 019 R1	BOLT, track shoe (for attachments with 72 shoes) (288)
267 019 R1	BOLT, track shoe (for attachments with 74 shoes) (296)
273 871 R1	NUT, track shoe (hex-type) (for attachments with 72 shoes) (*) (288)
273 871 R1	NUT, track shoe (hex-type) (for attachments with 66 shoes) (*) (264)
273 871 R1	NUT, track shoe (hex-type) (for attachments with 74 shoes) (*) (296)

STAGGERED LUG ICE AND SNOW GROUSER

57 535 DA	SHOE SET, track (center lug) (15" track shoe 57 515 DA) (33) and (end lug) (15" track shoe 57 516 DA) (33)
255 879 R91	SHOE SET, track (center lug) (wide tread) (See NOTE) (15" track shoe 57 515 DA) (36) and (end lug) (wide tread) (15" track shoe 57 516 DA) (See NOTE) (36)
270 821 R91	SHOE SET, track (center lug) (wide tread) (16" track shoe 270 823 R1) (33) and (end lug) (wide tread) (16" track shoe 270 824 R1) (33)
270 822 R91	SHOE SET, track (center lug) (wide tread) (16" track shoe 270 823 R1) (See NOTE) (36) and (end lug) (wide tread) (16" track shoe 270 824 R1) (See NOTE) (36)
270 020 R91	SHOE SET, track (center lug) (wide tread) (15" track shoe 57 515 DA (+)) (37) and (end lug) (wide tread) (15" track shoe 57 516 DA (+)) (37)

Included with above -

267 019 R1	BOLT, track shoe (for attachments with 66 shoes) (264)
267 019 R1	BOLT, track shoe (for attachments with 72 shoes) (288)
267 019 R1	BOLT, track shoe (for attachments with 74 shoes) (296)
273 871 R1	NUT, track shoe (hex-type) (for attachments with 66 shoes) (*) (264)
273 871 R1	NUT, track shoe (hex-type) (for attachments with 72 shoes) (*) (288)
273 871 R1	NUT, track shoe (hex-type) (for attachments with 74 shoes) (*) (296)

NOTE - For tractors equipped with extended frame attachments.
(*) - Square type track shoe bolt NUT, 263 981 R1, also available for service in place of hex-type 273 871 R1.
(X) - Factory Application - Order on Machine Order Form.
Field Application - Order through Regular Service Parts Channels.
(+) - For Equipment Combinations TD-9-424-2.
§ - Not Furnished Separately.

SPROCKET DRIVE, SHAFT, PINION AND SPROCKET, TRACK FRAME PIVOT SHAFT (T-61 and TD-61)

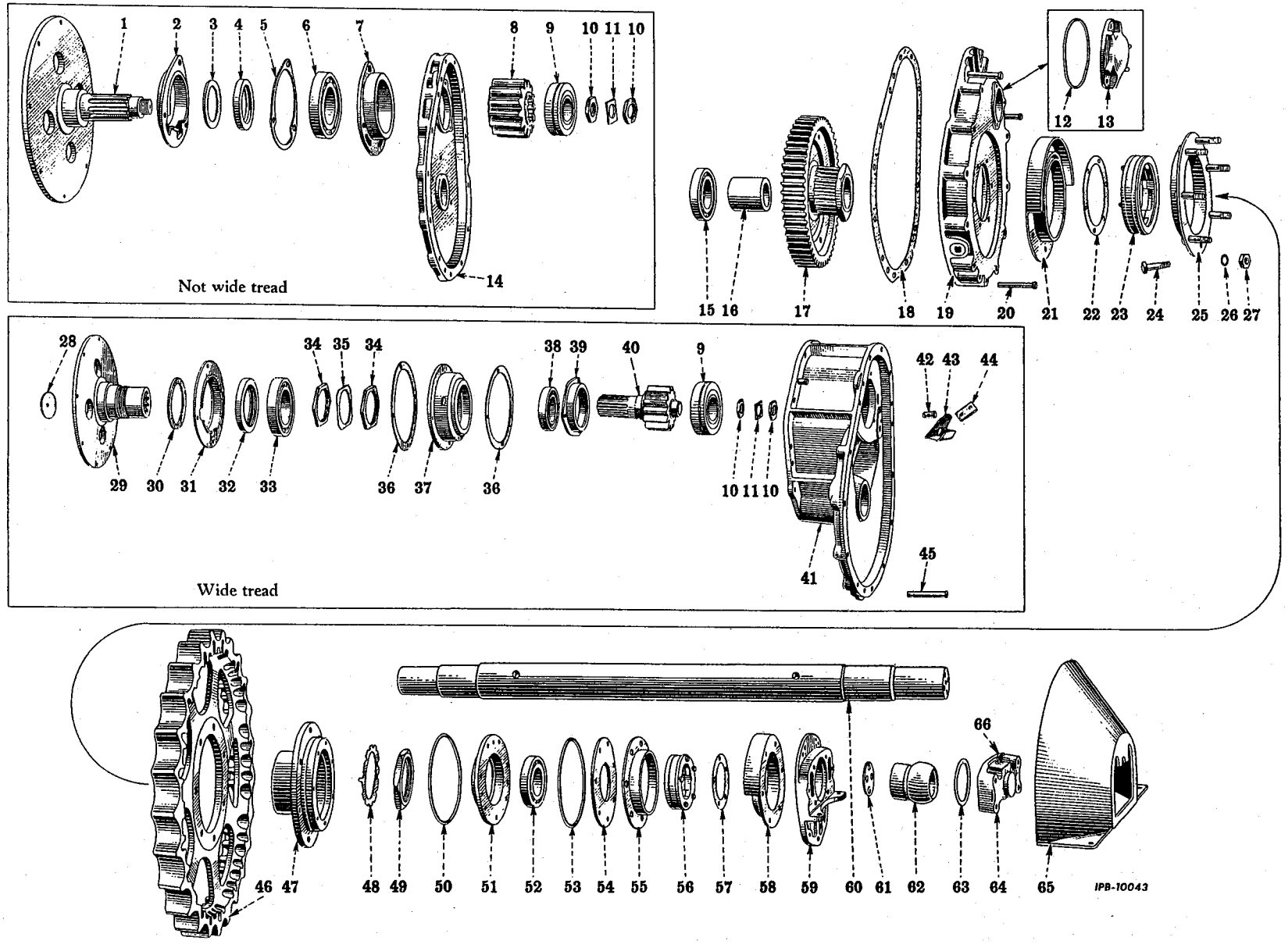

-190-

FINAL DRIVE

SPROCKET DRIVE, SHAFT, PINION AND SPROCKET, TRACK FRAME PIVOT SHAFT (T-61 and TD-61) - Continued

PRINTED IN UNITED STATES OF AMERICA

FINAL DRIVE

REF. NO.	PART NUMBER	DESCRIPTION
		SPROCKET DRIVE, SHAFT, PINION AND SPROCKET, TRACK FRAME PIVOT SHAFT (T-61 and TD-61) - Continued
1	51 370 DBX	SHAFT w/two NUTS, 51 377 D, sprocket drive pinion (not wide tread) (2)
2	8 498 D	RETAINER, sprocket drive pinion inner bearing (together w/OIL SEAL, 273 565 R91 and WASHER, 260 728 R1) (not wide tread) (will work for 84 980 DXA) (2) 3/8 x 1-1/4" hex-hd. cap SCREW (6) 3/8" lock WASHER (6)
3	260 728 R1	WASHER, sprocket drive pinion shaft felt (not wide tread) (2)
4	273 565 R91	OIL SEAL, sprocket drive pinion shaft (not wide tread) (2)
5	53 803 D	GASKET, sprocket drive pinion inner bearing cage (not wide tread) (4)
6	271 774 R91	BEARING, sprocket drive pinion inner ball (not wide tread) (4)
7	271 772 R1	CAGE, sprocket drive pinion inner bearing (not wide tread) (2)
8	271 775 R1	PINION, sprocket drive (12 T) (not wide tread) (2)
9	271 778 R91	BEARING, sprocket drive pinion outer (2)
10	51 377 D	NUT, sprocket drive pinion and bearing retainer (4)
11	51 378 D	LOCK, sprocket drive pinion and bearing retainer nut (2)
12	271 779 R1	RING, sprocket drive pinion outer bearing cap sealing (2)
13	8 132 DA	CAP, sprocket drive pinion outer bearing (2) 3/8 x 1" hex-hd. cap SCREW (6) 3/8" lock WASHER (6)
14	8 502 DDX	HOUSING w/pipe PLUG, 18 524 R1, sprocket drive gear inner (not wide tread) (2)
	18 524 R1	PLUG, 1-1/4" sq-socket steel pipe (2) 1/2 x 1-1/4" hex-hd. cap SCREW (4) 1/2 x 1-3/8" hex-hd. cap SCREW (2) 1/2 x 1-5/8" hex-hd. cap SCREW (4) 1/2" lock WASHER (10)
15	271 780 R91	BEARING, sprocket drive gear cylindrical roller inner (2)
16	8 129 DA	SPACER, sprocket drive gear bearing (2)
17	271 781 R91	GEAR, sprocket drive and carrier (51 T w/NUT, 43 819 DA) (2)
18	53 812 D	GASKET, sprocket drive gear housing (2)
19	8 501 DDX	HOUSING w/pipe PLUG, 271 848 R1, sprocket drive gear outer (LH and RH) (2) 1/2NF NUT (wide tread) (10)
	271 848 R1	PLUG, 1" sq-socket steel pipe (2) 1/2NF x 1-3/8" hex-hd. cap SCREW (wide tread) (6) 1/2 x 2-3/4" hex-hd. cap SCREW (not wide tread) (6) 1/2 x 3-1/2" hex-hd. cap SCREW (16) 1/2NF x 3-1/2" hex-hd. cap SCREW (wide tread) (4) 1/2 x 5" hex-hd. cap SCREW (not wide tread) (4) 1/2" lock WASHER (22) 1/2" external-tooth lock WASHER (4)
20	53 804 D	PIN, sprocket drive gear outer housing to main frame dowel (not wide tread) (4)

-191-

FINAL DRIVE

REF. NO.	PART NUMBER	DESCRIPTION
		SPROCKET DRIVE, SHAFT, PINION AND SPROCKET, TRACK FRAME PIVOT SHAFT (T-61 and TD-61) - Continued
21	53 555 D	GUARD w/inner and outer dirt DEFLECTORS, sprocket drive oil seal (2) 5/16NF x 1/2" hex-hd. cap SCREW (12) 5/16" lock WASHER (12)
22	45 124 DA	GASKET, sprocket drive oil seal (2)
23	53 535 D	OIL SEAL, sprocket drive (2)
24	46 758 DA	BOLT, sprocket carrier (14)
25	51 373 D	DEFLECTOR, sprocket drive oil seal dirt (2)
26		WASHER, 9/16" sprocket carrier bolt lock (Shakeproof 1126) (14)
27	32 888 D	NUT, sprocket carrier bolt (14)
28	172 599	PLUG, sprocket drive pinion shaft expansion (wide tread) (2)
29	51 365 DAXA	SHAFT w/expansion PLUG, 172 599 and two NUTS, 55 782 D, sprocket drive pinion (wide tread) (2)
30	53 808 D	WASHER, sprocket drive pinion shaft felt (wide tread) (2) (TD-61 38951 to 41321)
31	8 496 D	RETAINER, steering clutch support bearing (together with OIL SEAL, 302 912 R91 will work for 8 496 DX) (wide tread) (2) 3/8 x 1-3/8" hex-hd. cap SCREW (8) 3/8" lock WASHER (8)
32	302 912 R91	OIL SEAL, sprocket drive pinion shaft (wide tread) (2)
33	ST 311	BEARING, steering clutch support ball (IH - PC-275) (2)
34	55 782 D	NUT, steering clutch support bearing (wide tread) (4)
35	55 783 D	LOCK, steering clutch support bearing nut (wide tread) (2)
36	53 805 D	GASKET, steering clutch support bearing cage (wide tread) (2)
36	53 805 D	GASKET, steering clutch support bearing retainer (wide tread) (2)
37	8 504 D	CAGE, LH steering clutch support bearing (wide tread)
37	8 521 D	CAGE, RH steering clutch support bearing (wide tread)
38	271 774 R91	BEARING, sprocket drive pinion cylindrical roller inner (2)
39	271 773 R1	CAGE, sprocket drive pinion inner bearing (wide tread) (2) 3/8 x 1-1/8" hex-hd. cap SCREW (6) 3/8" lock WASHER (6)
40	271 776 R1	PINION, sprocket drive (12 T) (wide tread) (2)
41	8 503 DCX	CARRIER w/one PLUG, 18 524 R1 and one GASKET, 272 925 R1, sprocket drive (wide tread) (2)
	18 524 R1	PLUG, 1-1/4" sq-socket steel (2) 1/2 x 1-3/8" hex-hd. cap SCREW (20) 1/2" lock WASHER (20)
42	22 977 DA	PIN, sprocket drive carrier to main frame upper dowel (not wide tread) (4)
42	22 977 DA	PIN, sprocket drive gear outer housing to carrier upper dowel (wide tread) (4)

PRINTED IN UNITED STATES OF AMERICA

FINAL DRIVE

REF. NO.	PART NUMBER	DESCRIPTION
		SPROCKET DRIVE, SHAFT, PINION AND SPROCKET, TRACK FRAME PIVOT SHAFT (T-61 and TD-61) - Continued
43	8 497 D	TROUGH, LH steering clutch support bearing oil (together w/LOCK, 64 976 D will work for 8 497 DX) (wide tread) 3/8 x 1" hex-hd. cap SCREW (2)
43	8 522 D	TROUGH, RH steering clutch support bearing oil (together with LOCK, 64 976 D will work for 8 522 DX) (wide tread) 3/8 x 1" hex-hd. cap SCREW (2)
44	64 976 D	LOCK, steering clutch support bearing oil trough cap screw (2)
45	53 804 D	PIN, sprocket drive gear outer housing to carrier lower dowel (wide tread) (2)
46	8 448 DA	SPROCKET (25 T) (not cutaway) (2)
46	8 774 D	SPROCKET, cutaway (25 T) (2)
47	51 369 DA	CARRIER, sprocket (2)
48	43 813 D	LOCK, sprocket drive gear carrier nut (2)
49	43 819 DA	NUT, sprocket drive gear carrier (2)
50	264 258 R1	RING, sprocket drive gear outer bearing cage outer packing (2)
51	264 256 R3	CAGE, sprocket drive gear outer bearing (2)
52	ST 227	BEARING, sprocket drive gear outer ball (2)
53	252 536 R1	RING, sprocket drive gear outer bearing cage inner packing (will work for 264 257 R1) (2)
54	54 511 D	RETAINER, sprocket drive gear outer bearing (2)
55	53 529 D	DEFLECTOR, track frame oil seal dirt (2)
	264 259 R1	BOLT, sprocket drive gear outer bearing retainer (14) 7/16" external-tooth lock WASHER (14)
56	53 532 D	OIL SEAL, track frame pivot (2)
57	45 125 DA	GASKET, track frame pivot oil seal (2)
58	53 554 D	GUARD w/inner and outer dirt DEFLECTORS, track frame pivot oil seal (2) 5/16 x 1/2" hex-hd. cap SCREW (12) 5/16" lock WASHER (12)
59	265 959 R1	BRACKET, track frame pivot (2)
	265 960 R1	BOLT, track frame pivot bracket top (4)
	25 079 D	NUT, track frame pivot bracket top bolt (4)
60	260 890 R2	SHAFT, track frame pivot (not wide tread)
60	260 891 R1	SHAFT, track frame pivot (wide tread)
61	261 287 R1	SHIM, track frame pivot bearing (heavy) (12)
61	261 288 R1	SHIM, track frame pivot bearing (light) (8)
62	260 889 R1	BEARING, track frame pivot (2) 9/16NF x 1-5/8" hex-hd. cap SCREW (4) 9/16" lock WASHER (4)
63	43 846 D	GASKET, track frame pivot bracket cap (2)
	104 940	CORK, 1/2 x 11/16" dia. x 7/8" long (xx quality, size 5) (8) 1/2" lock WASHER (8)
64	6 154 DB	CAP, track frame pivot bracket (2) 1/2 x 1-1/4" hex-hd. cap SCREW (8)

FINAL DRIVE

REF. NO.	PART NUMBER	DESCRIPTION
		SPROCKET DRIVE, SHAFT, PINION AND SPROCKET, TRACK FRAME PIVOT SHAFT (T-61 and TD-61) - Continued
65	53 536 DAX	SHIELD w/SUPPORT and SPACER, sprocket (2) 1/2" NUT (not extended track frame) (4) 3/8 x 2-1/4" hex-hd. cap SCREW (4) 1/2NF x 1" hex-hd. cap SCREW (4) 1/2 x 1-1/2" hex-hd. cap SCREW (not extended track frame) (4) 3/8" lock WASHER (4) 1/2" lock WASHER (8)
66	271 416	FITTING, track frame pivot lubrication (optional with 271 284) (2)
66	271 284	FITTING, track frame pivot lubrication (optional with 271 416) (2)
	57 525 D	ATTACHMENT, cutaway sprocket (consists of two SPROCKETS, 8 774 D and two LOCK-WIRES, 263 945 R1) (See NOTE)
	265 961 R1	BOLT, track frame pivot bracket side (6)
	272 925 R1	GASKET, sprocket drive oil filler plug (2)
	32 454 D	NUT, track frame pivot bracket side bolt (6)
	43 841 D	SCREW, track frame pivot set (2) 5/8" jam NUT (2)
	263 945 R1	WIRE, track master link pin lock (2)

NOTE - Factory Application - Order on Machine Order Form.
Field Application - Order through Regular Service Parts Channels.

SPROCKET DRIVE, SHAFT, PINION AND SPROCKET, TRACK FRAME PIVOT SHAFT (T-91)

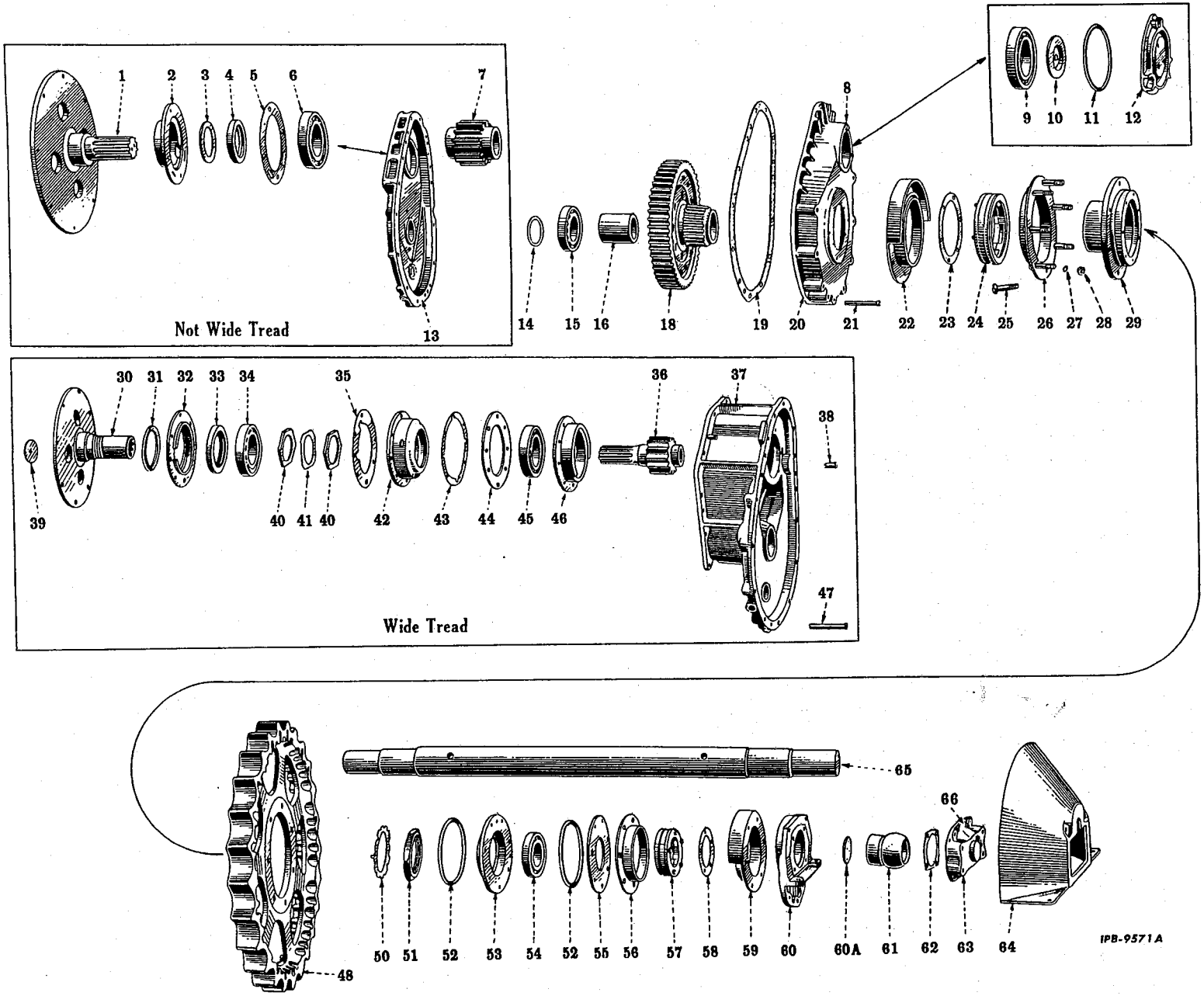

SPROCKET DRIVE, SHAFT, PINION AND SPROCKET, TRACK FRAME PIVOT SHAFT (TD-91) - Continued

FINAL DRIVE

REF. NO.	PART NUMBER	DESCRIPTION
		SPROCKET DRIVE, SHAFT, PINION AND SPROCKET, TRACK FRAME PIVOT SHAFT (TD-91) - Continued
1	52 209 DB	SHAFT, sprocket drive pinion (not wide tread) (2)
2	8 510 DA	RETAINER, sprocket drive pinion inner bearing (not wide tread) (2) 3/8 x 1" hex-hd. cap SCREW (4) 3/8" lock WASHER (4)
3	54 011 D	WASHER, sprocket drive pinion shaft felt (not wide tread) (2)
4	273 575 R91	OIL SEAL, sprocket drive pinion shaft (not wide tread) (optional with 276 203 R91) (2)
4	276 203 R91	OIL SEAL, sprocket drive pinion shaft (not wide tread) (optional with 273 575 R91) (2)
5	54 009 D	GASKET, sprocket drive pinion inner bearing retainer (not wide tread) (2)
6	ST 281	BEARING, sprocket drive pinion inner (IHC-PL 275) (2)
7	64 487 DA	PINION, sprocket drive (12 T) (not wide tread) (2)
8	54 006 D	PIN, sprocket drive gear outer housing to main frame dowel (4)
9	ST 228	BEARING, sprocket drive pinion outer (2)
10	46 821 D	RETAINER, sprocket drive pinion outer bearing (2) 7/16NF x 1-1/4" hex-hd. cap SCREW (4) 7/16" lock WASHER (4)
11	264 123 R1	"O" RING, sprocket drive pinion outer bearing cap (2)
12	8 232 DB	CAP, sprocket drive pinion outer bearing (2) 1/2 x 1-1/4" hex-hd. cap SCREW (6) 1/2" lock WASHER (6)
13	8 512 DBX	HOUSING w/two PLUGS, 271 848 R1, PLUG, 18 524 R1 and GASKET, 272 925 R1, sprocket drive gear inner (not wide tread) (2)
	18 524 R1	PLUG, 1-1/4" sq-soc-stl. pipe (2)
	271 848 R1	PLUG, 3/4" sq-soc-stl. pipe (4) 1/2 x 1-3/8" hex-hd. cap SCREW (16) 1/2" lock WASHER (16)
14	295 762 R1	RING, track frame pivot shaft oil seal (will work for 46 810 D) (2)
15	ST 315	BEARING, sprocket drive gear inner (2)
16	52 225 D	SPACER, sprocket drive gear bearing (2)
18	64 490 DC	GEAR and CARRIER w/NUT, 46 794 DA, sprocket drive (2)
19	54 012 D	GASKET, sprocket drive gear housing (2)
20	8 513 DB	HOUSING, sprocket drive gear outer (2) 1/2NF NUT (wide tread) (16) 1/2NF x 1-1/2" hex-hd. cap SCREW (wide tread) (12) 1/2NF x 2-3/4" hex-hd. cap SCREW (wide tread) (4) 1/2 x 2-3/4" hex-hd. cap SCREW (not wide tread) (18) 1/2 x 2-3/4" hex-hd. cap SCREW (wide tread) (18) 1/2 x 3-1/2" hex-hd. cap SCREW (not wide tread) (16) 1/2" lock WASHER (34)
21	54 007 D	PIN, sprocket drive gear outer housing to inner housing dowel (not wide tread) (2)

FINAL DRIVE

REF. NO.	PART NUMBER	DESCRIPTION
		SPROCKET DRIVE, SHAFT, PINION AND SPROCKET, TRACK FRAME PIVOT SHAFT (TD-91) - Continued
22	52 231 D	GUARD w/inner and outer dirt DEFLECTORS, sprocket drive oil seal (2) 3/8 x 3/4" hex-hd. cap SCREW (12) 3/8" lock WASHER (12)
23	46 751 DA	GASKET, sprocket drive oil seal (2)
24	53 537 DA	OIL SEAL, sprocket drive (2)
25	52 226 DA	BOLT, sprocket carrier (14)
26	52 222 D	DEFLECTOR, sprocket drive oil seal dirt (2)
27		WASHER, 5/8" external-tooth sprocket carrier bolt lock (14)
28	32 454 D	NUT, sprocket carrier bolt (14)
29	52 229 DA	CARRIER, sprocket (2)
30	52 210 DAXA	SHAFT w/PLUG, 172 599 and two NUTS, 54 013 D, sprocket drive pinion (wide tread) (2)
31	54 008 D	WASHER, sprocket drive pinion shaft felt (wide tread) (2) (TD-91 60301 to 66861)
32	8 508 DA	RETAINER, steering clutch support bearing (wide tread) (2) 3/8 x 1-3/8" hex-hd. cap SCREW (8) 3/8" lock WASHER (8)
33	279 491 R92	OIL SEAL, sprocket drive pinion shaft (wide tread) (will work for 273 576 R91) (2)
34	ST 276	BEARING, steering clutch support (wide tread) (2)
35	54 004 D	GASKET, steering clutch support bearing retainer (wide tread) (2)
36	64 488 DA	PINION, sprocket drive (12 T) (wide tread) (2)
37	8 511 DCX	CARRIER w/two PLUGS, 271 848 R1, PLUGS 18 524 R1 and GASKET, 272 925 R1, sprocket drive (wide tread) (2)
	271 848 R1	PLUG, 3/4" sq-soc. stl. pipe (4)
	18 524 R1	PLUG, 1-1/4" sq-soc. stl. pipe (2) 1/2 x 1-3/8" hex-hd. cap SCREW (32) 1/2" lock WASHER (32)
38	22 977 DA	PIN, sprocket drive carrier to main frame dowel (wide tread) (4)
39	172 599	PLUG, 2-3/8" steering clutch support shaft expansion (wide tread)
40	54 013 D	NUT, steering clutch support bearing (wide tread) (4)
41	54 016 D	LOCK, steering clutch support bearing nut (wide tread) (2)
42	8 507 D	CAGE, LH steering clutch support bearing (wide tread)
42	8 516 D	CAGE, RH steering clutch support bearing (wide tread)
43	54 003 D	GASKET, steering clutch support bearing cage (wide tread) (2)
44	54 010 D	RETAINER, sprocket drive pinion inner bearing (wide tread) (2) 3/8 x 1-1/4" hex-hd. cap SCREW (4) 3/8" lock WASHER (4)
45	ST 228	BEARING, sprocket drive pinion inner (wide tread) (2)
46	8 509 D	CAGE, sprocket drive pinion inner bearing (wide tread) (2)

REF. NO.	PART NUMBER	DESCRIPTION
		SPROCKET DRIVE, SHAFT, PINION AND SPROCKET, TRACK FRAME PIVOT SHAFT (TD-91) - Continued
47	54 007 D	PIN, sprocket drive gear housing to carrier lower dowel (wide tread) (2)
48	8 450 DA	SPROCKET (27 T) (2)
48	8 775 DA	SPROCKET, cutaway (27 T) (2)
50	46 795 D	LOCK, sprocket drive gear carrier nut (2)
51	46 794 DA	NUT, sprocket drive gear carrier (2)
52	264 263 R1	RING, sprocket drive gear outer bearing cage packing (outer ring) (2)
52	264 262 R1	RING, sprocket drive gear outer bearing cage packing (inner ring) (2)
53	264 261 R2	CAGE, sprocket drive gear outer bearing (2)
54	ST 223	BEARING, sprocket drive gear outer (2)
55	54 514 D	RETAINER, sprocket drive gear outer bearing (2)
56	54 515 D	DEFLECTOR, track frame pivot oil seal dirt (2)
	264 259 R1	BOLT, sprocket drive gear outer bearing retainer (14)
		7/16" external-tooth lock WASHER (14)
57	53 538 DA	OIL SEAL, track frame pivot (2)
58	46 799 DA	GASKET, track frame pivot oil seal (2)
59	46 800 D	GUARD w/inner and outer dirt DEFLECTORS, track frame pivot oil seal (2)
		3/8 x 5/8" hex-hd. cap SCREW (12)
		3/8" lock WASHER (12)
60	266 059 R1	BRACKET, track frame pivot (2)
	262 650 R1	BOLT, track frame pivot bracket top (4)
	266 060 R1	BOLT, track frame pivot bracket side (6)
	262 651 R1	NUT, track frame pivot bracket top bolt (4)
	45 293 D	NUT, track frame pivot bracket side bolt (6)
60A	261 289 R1	SHIM, track frame pivot bearing (heavy) (X)
60A	261 290 R1	SHIM, track frame pivot bearing (light) (XX)
61	260 892 R2	BEARING, track frame pivot (2)
		5/8NF x 1-1/2" hex-hd. cap SCREW (4)
62	53 627 D	GASKET, track frame pivot bracket cap (2)
63	8 461 DA	CAP, track frame pivot bracket (2)
	271 664 R1	BOLT, track frame pivot bracket cap (8)
	104 940	CORK, No. 4, 5/8" dia. x 1-3/16" long (8)
64	53 539 DBX	SHIELD w/SUPPORT and SPACER, sprocket (2)
		1/2" NUT (not extended track frame) (4)
		7/16 x 1-3/4" hex-hd. cap SCREW (4)
		1/2 x 1" hex-hd. cap SCREW (4)
		1/2 x 1-1/2" hex-hd. cap SCREW (not extended track frame) (4)
		7/16" lock WASHER (4)
		1/2" lock WASHER (8)
65	260 893 R1	SHAFT, track frame pivot (not wide tread)
65	260 894 R1	SHAFT, track frame pivot (wide tread)

REF. NO.	PART NUMBER	DESCRIPTION
		SPROCKET DRIVE, SHAFT, PINION AND SPROCKET, TRACK FRAME PIVOT SHAFT (TD-91) - Continued
66	271 415	FITTING, track frame pivot lubrication (Lincoln 105200) (optional with 271 283) (2)
66	271 283	FITTING, track frame pivot lubrication (Alemite 1688-B) (optional with 271 415) (2)
	57 236 D	ATTACHMENT, cutaway sprocket (Consists of two SPROCKETS, 8 775 DA and two WIRES, 263 945 R1) (See NOTE)
	272 925 R1	GASKET, sprocket drive oil filler plug (2)
	46 809 D	SCREW, track frame pivot shaft set (2)
		5/8" jam NUT (2)
	263 945 R1	WIRE, lock track master link pin (2)

XX - 8 or more as required.
X - 12 or more as required.
NOTE - Factory Application - Order on Machine Order Form.
Field Application - Order through Regular Service Parts Channels.

REF. NO.	PART NUMBER	DESCRIPTION

SPROCKET DRIVE HOUSING SHIELD
(T-61, TD-61 and TD-91)

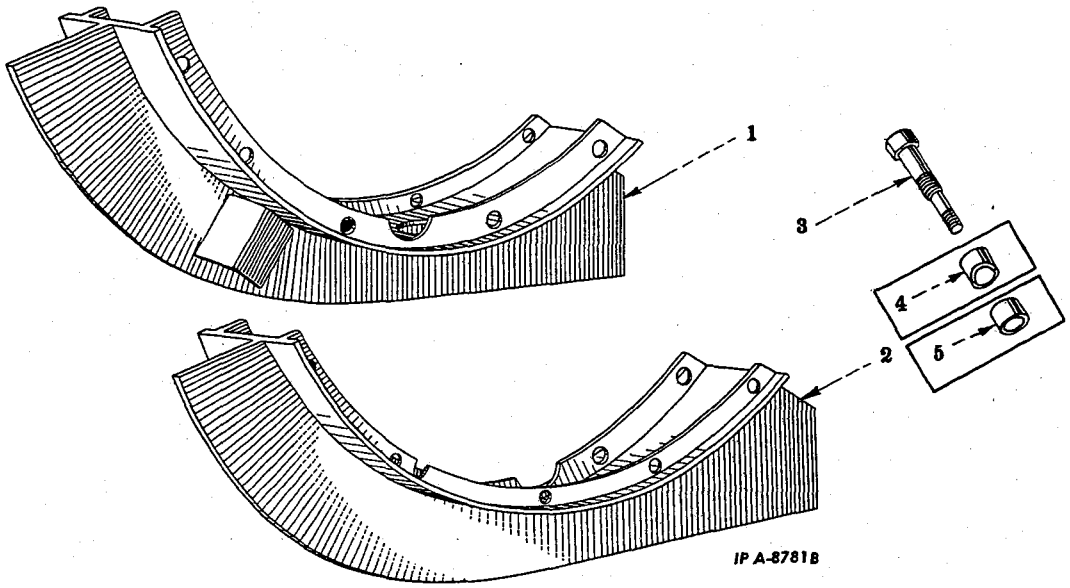

⊗ - KEY TO UNITS

A -	257 789 R91	ATTACHMENT, sprocket drive housing shield (See NOTE) (T-61 and TD-61)
B -	257 777 R91	ATTACHMENT, sprocket drive housing shield (See NOTE) (TD-91)

⊗ Letters of these units correspond with those shown following the description of the parts in the list below and identifies the unit for which the part is used. Items without letters after the description indicates the part is used for all units.

1	257 790 R92	SHIELD, LH sprocket drive housing (Unit A)
1	257 778 R91	SHIELD, LH sprocket drive housing (Unit B)
2	257 791 R92	SHIELD, RH sprocket drive housing (Unit A)
2	257 779 R91	SHIELD, RH sprocket drive housing (Unit B)
3	257 785 R1	BOLT, sprocket drive shield (Unit B) (10)
3	257 797 R1	BOLT, sprocket drive shield (Unit A) (10) 3/8NF NUT (10) 3/8" external-tooth lock WASHER (10)
4	257 786 R1	COLLAR, sprocket drive housing shield support (Unit B) (10)
4	257 798 R1	COLLAR, sprocket drive housing shield support (regular gauge) (Unit A) (10)
5	259 896 R1	COLLAR, sprocket drive housing shield support (wide gauge) (Unit A) (10)

NOTE - Factory Application - Order on Machine Order Form.
Field Application - Order through Regular Service Parts Channels.

REF. NO.	PART NUMBER	DESCRIPTION

SPROCKET DRIVE HOUSING SHIELD
(T-61 and TD-61 and TD-91) - Continued

HYDRAULIC SYSTEM

REF. NO.	PART NUMBER	DESCRIPTION

HYDRAULIC REMOTE CONTROL TRACTOR ATTACHMENTS
(Many of the Parts in the Attachments Listed below are illustrated on the following pages)

⊗ - KEY TO UNITS

A -	275 941 R91	ATTACHMENT, hydraulic remote control tractor (TD-61) ⊕
B -	275 940 R91	ATTACHMENT, hydraulic remote control tractor (T-61) ⊕
C -	275 933 R91	ATTACHMENT, hydraulic remote control tractor (TD-91) ⊕

⊗ Letters of these units correspond with those shown following the description of the parts in the list below and identifies the unit for which the part is used. Items without letters after the description indicates the part is used for all units.

354 847 R2	BASE, auxiliary control valve 3/8" NUT (2) 3/8 x 1-1/2" hex-hd. cap SCREW (2) 3/8" lock WASHER (2) 13/32 x 13/16" x 16 ga. WASHER (2)
262 630 R11	BRACKET, break-away coupling 1/2" NUT (2) 1/2 x 1-1/4" hex-hd. cap SCREW (2) 1/2" lock WASHER (2)
275 929 R1	BRACKET, hydraulic pump section and pressure hose support 3/8" NUT 3/8 x 7/8" hex-hd. cap SCREW 3/8" lock WASHER
364 655 R1	CAP, front break-away coupling half dust (2)
364 311 R91	COUPLING, 353 217 R92, w/FRAME, 364 312 R91, front break-away
144 122	ELBOW, hydraulic pump flange (Unit B)
108 686	ELBOW, 1/2" x 90° street (mall. iron) (2 for Unit A, B and C)
108 687	ELBOW, 1" x 90° street (Mall. iron) (Unit A, B and C)
119 098	ELBOW, 1/2" x 90° (mall. iron) (2 for Unit A, B and C)
263 307 R2	FLANGE, hydraulic pump (Unit A) 3/8 x 3-1/4" hex-hd. cap SCREW (3) 3/8" lock WASHER (3)
355 556 R1	FLANGE, hydraulic pump (Unit C)
355 555 R1	FLANGE, hydraulic pump (Unit B) 3/8 x 3-1/2" hex-hd. cap SCREW (3) 3/8" lock WASHER (3)
261 203 R1	GASKET, hydraulic pump (Unit A and C)
354 952 R2	GASKET, hydraulic pump (Unit B)
262 633 R91	HOSE, 1/2 x 25" auxiliary control valve (2)
355 496 R92	HOSE, 1/2 x 19" safety valve
262 631 R91	HOSE, 3/4 x 44" hydraulic pump pressure (Unit B)
355 512 R92	HOSE, 3/4 x 50-1/2" hydraulic pump pressure (Unit A and C)
262 632 R91	HOSE, 1 x 45" hydraulic pump suction (Unit A and B)
355 533 R91	HOSE, hydraulic pump suction (Unit C)
124 543	KEY, 1/8 x 1/2" hydraulic pump drive gear (Woodruff No. 3) (Unit A and C)
275 932 R1	LEVER, auxiliary control hand 3/8" NUT 3/8 x 1-1/2" hex-hd. cap SCREW 3/8" lock WASHER

-197-

HYDRAULIC SYSTEM

REF. NO.	PART NUMBER	DESCRIPTION

HYDRAULIC REMOTE CONTROL TRACTOR ATTACHMENTS
(Many of the Parts in the Attachments Listed below are illustrated on the following pages) - Continued

121 664	NIPPLE, 1/2 x 2-1/2" steel pipe (control valve)
127 874	NIPPLE, 1 x 1-1/2" steel pipe (auxiliary control valve base)
143 167	NIPPLE, 1/2 x 3-3/4" steel pipe (safety valve elbow)
190 566	NIPPLE, 1 x 4-3/4" steel pipe (reservoir tank to auxiliary valve)
103 870	PLUG, 1" sq-hd. pipe (reservoir tank elbow)
355 554 R95	PUMP, hydraulic (optional with 363 780 R93) (for components see list of parts under details of "Hydraulic Pump") (Unit A and C)
363 780 R93	PUMP, hydraulic (optional with 355 554 R95) (for components see list of parts under details of "Hydraulic Pumps") (Unit A anc C) 3/8 x 1-1/4" hex-hd. cap SCREW 3/8 x 1-3/8" hex-hd. cap SCREW 3/8 x 3-3/4" hex-hd. cap SCREW (2) 3/8" lock WASHER (4)
357 214 R93	PUMP, hydraulic (for components see list of parts under details of "Hydraulic Pumps") (Unit B) 3/8 x 1-1/4" hex-hd. cap SCREW 3/8 x 1-3/8" hex-hd. cap SCREW 3/8 x 3-3/4" hex-hd. cap SCREW (2) 3/8" lock WASHER (4)
350 818 R1	RING, hydraulic pump sealing (2)
253 070 R1	RING, auxiliary control valve sealing (will work for 352 024 R2)
353 213 R2	SPRING, break-away coupling bracket
354 868 R93	STRAINER, oil reservoir
32 445 D	STUD, hydraulic pump (Unit C)
365 739 R1	STUD, hydraulic pump (Unit A and B) 3/8NF jam NUT 3/8" external-tooth lock WASHER
275 930 R91	TANK, oil reservoir 3/8 x 1" hex-hd. cap SCREW (4) 3/8" lock WASHER (4)
355 493 R93	VALVE ASSEMBLY, safety (for components see list of parts under details of "Reservoir, Safety Valve and Connections")
355 529 R92	VALVE ASSEMBLY, auxiliary control (for components see list of parts under details of "Control Valve, Connections and Hose")
116 566	PLUG, 1/2" sq-soc. pipe 5/16 x 1-3/4" hex-hd. cap SCREW (3) 5/16" lock WASHER (3)
16 038 R1	WASHER, break-away coupling (3) 1/8 x 7/8" cotter PIN

⊕ Field Application Only. Order through Regular Service Parts Cahnnels.

HYDRAULIC SYSTEM

REF. NO.	PART NUMBER	DESCRIPTION

HYDRAULIC EQUIPMENT
(T-61, TD-61 and TD-91)

List of Parts

This list contains all the parts required to provide various combinations of equipment to accommodate remote control, hose extension, etc. The quantity of parts required for any use must be determined by the customer. These parts are to be ordered and assembled from parts stock. Many of these parts are illustrated in other units elsewhere in this catalog.

353 216 R91	COUPLING ASSEMBLY, hydraulic break-away rear section (for components see list of parts under detail of "Break-Away or Seal-Sealing Couplings") (X)
353 217 R92	COUPLING ASSEMBLY, hydraulic self-sealing male (for components see list of parts under details of "Break-Away or Self-Sealing Couplings") (X)
353 218 R91	COUPLING ASSEMBLY, female hydraulic self-sealing (for components see list of parts under details of "Break-away or Self-Sealing Couplings") (X)

BREAK-AWAY AND SELF-SEALING COUPLINGS
(T-61, TD-61 and TD-91)

-198-

HYDRAULIC SYSTEM

REF. NO.	PART NUMBER	DESCRIPTION

HYDRAULIC EQUIPMENT
(T-61, TD-61 and TD-91) - Continued

360 997 R91	CYLINDER ASSEMBLY, hydraulic (3-1/2 x 8") (for components see list of parts under details of "Hydraulic Cylinders") (X)
357 961 R91	HOSE, 1/2 x 60") hydraulic cylinder (X)
357 962 R91	HOSE, 1/2" x 96" hydraulic clyinder (X)
361 428 R91	HOSE, 1/2 x 152" hydraulic cylinder (X)
141 504	NIPPLE, 1/2 x 1-1/2" close pipe (X)
357 965 R2	NUT, union self-sealing coupling (white) (X)
363 462 R1	NUT, union self-sealing coupling (black) (X)
108 493 R1	RING, self-sealing male coupling snap (white) (X)
363 463 R1	RING, self-sealing male coupling snap (black) (X)

X - As Required

BREAK-AWAY AND SELF-SEALING COUPLINGS
(T-61, TD-61 and TD-91) - Continued

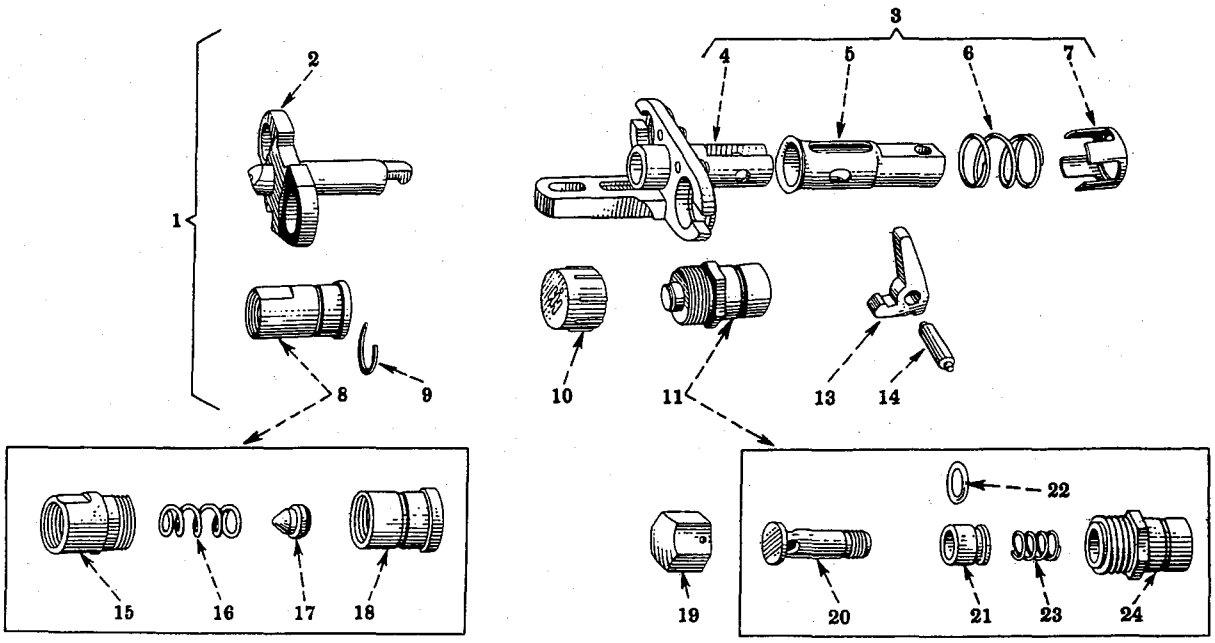

IPA-45230

	364 310 R91	COUPLING, 364 311 R91, w/COUPLING, 353 216 R91, break-away
1	353 216 R91	COUPLING ASSEMBLY, break-away (rear section) (Consists of - 2 COUPLING 353 218 R91; 1 FRAME 353 220 R1; 2 RING 353 228 R1)
2	353 220 R1	FRAME, break-away rear
3	364 311 R91	COUPLING, break-away (front section) 353 217 R92, w/FRAME, 364 312 R91 assembly
3	364 312 R91	FRAME ASSEMBLY, break-away (Composed of - 1 COVER 353 223 R1; 1 DRAWBAR 353 222 R1; 1 FRAME 364 313 R91; 1 LATCH 353 225 R1; 1 PIN 353 226 R1; 1 SPRING 353 224 R1)

PRINTED IN UNITED STATES OF AMERICA

HYDRAULIC SYSTEM

REF. NO.	PART NUMBER	DESCRIPTION

BREAK-AWAY AND SELF-SEALING COUPLINGS
(T-61, TD-61 and TD-91) - Continued

REF. NO.	PART NUMBER	DESCRIPTION
4	364 313 R91	FRAME w/two PINS and two snap RINGS, front break-away
5	353 222 R1	DRAWBAR, break-away frame
6	353 224 R1	SPRING, break-away frame latch
7	353 223 R1	COVER, break-away frame latch spring
8	353 218 R91	COUPLING ASSEMBLY, break-away rear half or hydraulic self-sealing female (2) (Composed of - 1 ADAPTER 357 129 R1; 1 BODY 357 130 R1; 1 SPRING 357 128 R1; 1 VALVE 357 127 R91)
9	353 228 R1	RING, rear break-away coupling snap (2)
10	368 710 R1	CAP, front section break-away coupling dust (will work for 364 655 R1) (2)
11	353 217 R92	COUPLING ASSEMBLY, break-away front half or hydraulic self-sealing male (2) (Composed of - 1 BODY 357 131 R1; 1 RING 352 221 R1; 1 SLEEVE 364 250 R91; 1 SPRING 357 135 R1; 1 VALVE 357 132 R1; 1 WASHER 368 396 R1)

CONTROL VALVE, CONNECTIONS AND HOSE
(T-61, TD-61 and TD-91)

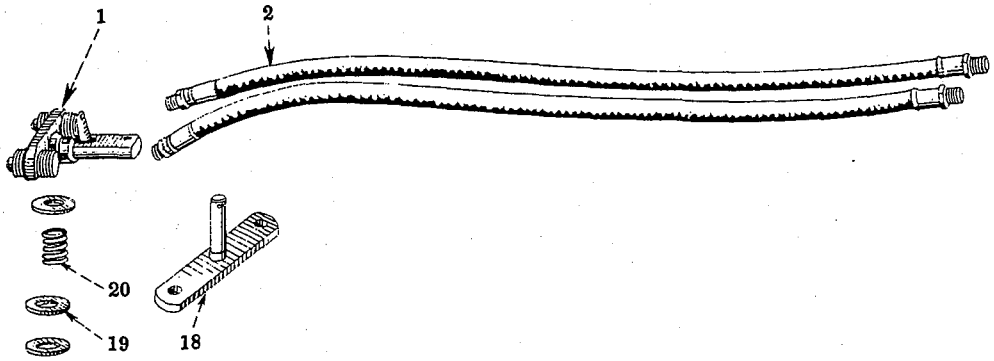

HYDRAULIC SYSTEM

REF. NO.	PART NUMBER	DESCRIPTION

BREAK-AWAY AND SELF-SEALING COUPLINGS
(T-61, TD-61 and TD-91) - Continued

REF. NO.	PART NUMBER	DESCRIPTION
13	353 225 R1	LATCH, break-away frame
14	353 226 R1	PIN, break-away frame latch
15	357 129 R1	ADAPTER, break-away or self-sealing coupling (2)
16	357 128 R1	SPRING, break-away or self-sealing coupling poppet valve (2)
17	357 127 R91	VALVE w/SEAL, break-away or self-sealing coupling poppet (2)
18	357 130 R1	BODY, rear break-away or self-sealing couplin half (2)
19	357 136 R2	EXTRACTOR, break-away or self-sealing coupling tubular valve (X)
20	357 132 R1	VALVE, break-away or self-sealing coupling tubular (2)
21	364 250 R91	SLEEVE w/SEAL, break-away or self-sealing coupling insert (2)
22	352 221 R1	RING, break-away or self-sealing coupling tubular valve seal (2)
23	357 135 R1	SPRING, break-away or self-sealing coupling tubular valve (2)
24	357 131 R1	BODY, front break-away or self-sealing coupling half (2)
	368 396 R1	WASHER, seal ring back up (2)

X - As Required

CONTROL VALVE, CONNECTIONS AND HOSE
(T-61, TD-61 and TD-91) - Continued

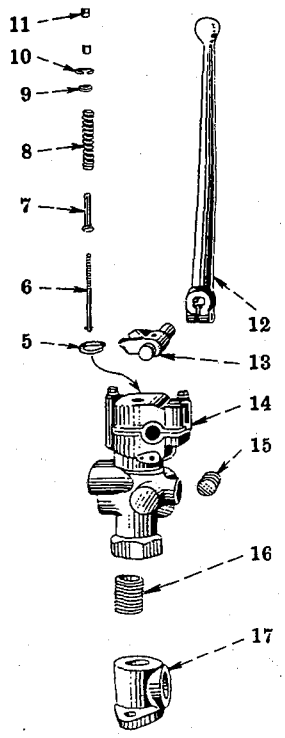

IPA-45234 A

HYDRAULIC SYSTEM

REF. NO.	PART NUMBER	DESCRIPTION

CONTROL VALVE, CONNECTIONS AND HOSE
(T-61, TD-61 and TD-91) - Continued

1	364 311 R91	COUPLING ASSEMBLY, break-away front section (for components see list of parts under details of "Break-Away and Self-Sealing Coupling")
2	262 633 R91	HOSE, auxiliary control valve (2)
3		Not Used
4		Not Used
5	253 070 R1	SEAL, control valve (will work for 352 024 R2)
6	352 200 R21	ROD, control valve centering spring 1/4" NUT
7	352 198 R1	SLEEVE, control valve centering spring
8	352 199 R1	SPRING, control valve centering
9	352 201 R2	WASHER, control valve centering spring
10	352 202 R1	LOCK, control valve centering spring
11	352 203 R1	SPACER, control valve centering spring (2)
12	275 932 R1	LEVER, auxiliary control hand 3/8" NUT 3/8 x 1-1/2" hex-hd. cap SCREW 3/8" lock WASHER
13	354 846 R11	SHAFT and YOKE w/PIN, 17 175 R1, control valve
	17 175 R1	PIN, hand lever yoke

HYDRAULIC PUMP, FLANGE AND HOSE
(T-61, TD-61 and TD-91)

-200-

HYDRAULIC SYSTEM

REF. NO.	PART NUMBER	DESCRIPTION

CONTROL VALVE, CONNECTIONS AND HOSE
(T-61, TD-61 and TD-91) - Continued

14	355 529 R92	VALVE ASSEMBLY, auxiliary control (Composed of - 1 LOCK 352 202 R1 1 ROD 352 200 R21 1 SEAL 253 070 R1 1 SLEEVE 352 198 R1 1 SHAFT and YOKE 354 846 R11 2 SPACER 352 203 R1 1 SPRING 352 199 R1 1 WASHER 352 201 R2) 5/16 x 1-3/4" hex-hd. cap SCREW (3) 5/16" lock WASHER (3)
15	116 566	PLUG, 1/2" sq-soc. pipe
16	127 874	NIPPLE, 1 x 1-1/2" auxiliary control valve base
17	354 847 R2	BASE, auxiliary control valve 3/8" NUT (2) 3/8 x 1-1/2" hex-hd. cap SCREW (2) 3/8" lock WASHER (2) 13/32 x 13/16" x 16 ga. WASHER (2)
18	262 630 R11	BRACKET, break-away coupling 1/2" NUT (2) 1/2 x 1-1/4" hex-hd. cap SCREW (2) 1/2" lock WASHER (2)
19	16 038 R1	WASHER, break-away coupling (3) 1/8 x 7/8" cotter PIN
20	353 213 R2	SPRING, break-away coupling bracket
	121 664	NIPPLE, 1/2 x 2-1/2"

HYDRAULIC PUMP, FLANGE AND HOSE
(T-61, TD-61 and TD-91) - Continued

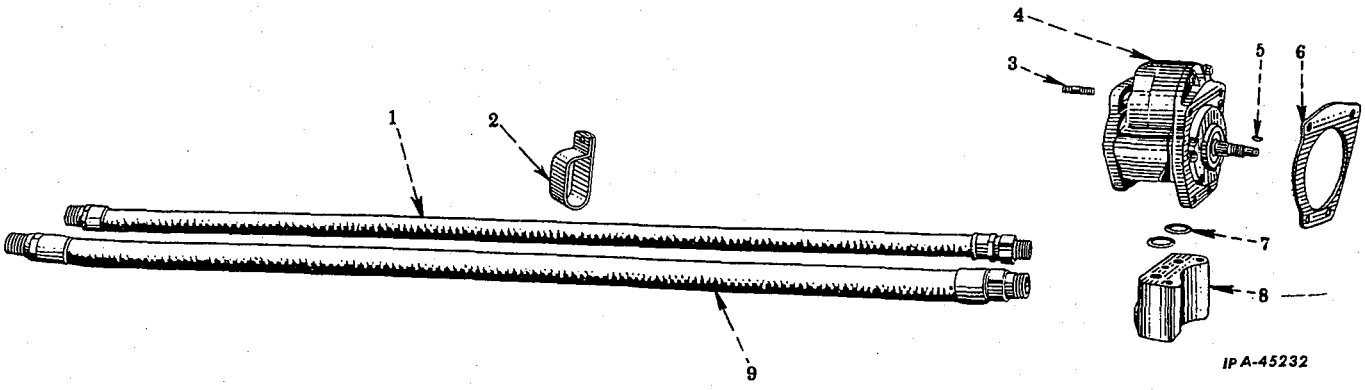

1	262 632 R91	HOSE, 1-1/2 x 45" long hydraulic pump suction (T-61 and TD-61)
1	355 533 R91	HOSE, 1-1/2 x 51" long hydraulic pump suction (TD-91)
2	275 929 R1	BRACKET, hydraulic pump suction and pressure hose support 3/8" NUT 3/8 x 7/8" hex-hd. cap SCREW 3/8" lock WASHER
3	32 445 D	STUD, hydraulic pump (TD-91)
3	365 739 R1	STUD, hydraulic pump (will work for 32 445 D) (T-61 and TD-61) 3/8" jam NUT 3/8" external-tooth lock WASHER
4	363 780 R93	PUMP, hydraulic (optional with 355 554 R95) (for components see list of parts under details of "Hydraulic Pump") (TD-61 and TD-91)
4	355 554 R95	PUMP, hydraulic (optional with 363 780 R93) (for components see list of parts under details of "Hydraulic Pump") (TD-61 and TD-91)

PRINTED IN UNITED STATES OF AMERICA

HYDRAULIC SYSTEM

REF. NO.	PART NUMBER	DESCRIPTION
		HYDRAULIC PUMP, FLANGE AND HOSE (T-61, TD-61 and TD-91) - Continued
4	357 214 R94	PUMP, hydraulic (optional with 362 175 R93) (for components see list of parts under details of "Hydraulic Pump") (T-61)
4	362 175 R93	PUMP, hydraulic (optional with 357 214 R94) (for components see list of parts under details of "Hydraulic Pump") (T-61)
5	124 543	KEY, hydraulic pump drive gear (Woodruff No. 3, 1/8 x 1/2") (T-61, TD-61 and TD-91)
6	261 203 R1	GASKET, hydraulic pump (TD-61 and TD-91)
6	354 952 R2	GASKET, hydraulic pump (T-61)
7	350 818 R1	RING, hydraulic pump flange seal (2)

HYDRAULIC CYLINDER
(T-61, TD-61 and TD-91)

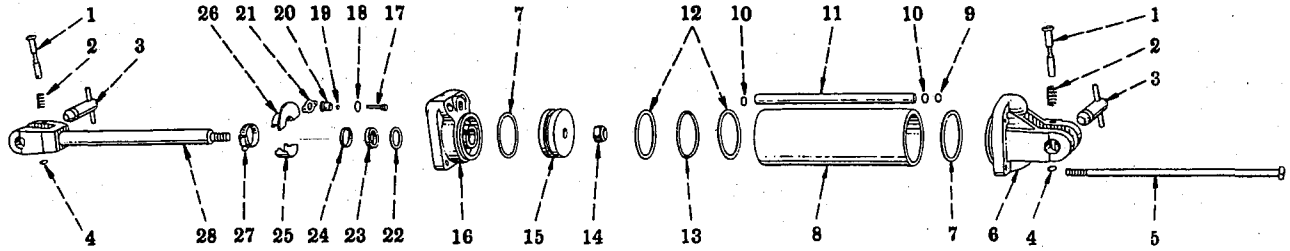

	360 997 R91	CYLINDER ASSEMBLY, hydraulic (3-1/2 x 8")
1	352 369 R2	PIN, lock (2) 3/32 x 3/4" cotter PIN (2)
2	352 370 R1	SPRING, lock pin (2)
3	352 231 R11	PIN w/HANDLE, cylinder pivot (2)
4	354 837 R1	WASHER, pin lock (2)
5	361 004 R1	BOLT, hydraulic cylinder tie (4) 1/2NF NUT (4)
6	361 002 R1	HEAD, hydraulic cylinder (bottom end)
7	354 836 R1	RING, hydraulic cylinder seal (2)
8	354 051 R1	TUBE, hydraulic cylinder
9		WASHER, lock 3/8"
10	352 221 R1	RING, cylinder return tube seal (2)
11	354 834 R11	TUBE w/two WASHER, cylinder return
12	361 012 R1	WASHER, piston head back-up (2)
13	352 216 R1	RING, piston head seal
14	361 011 R1	NUT, piston rod lock
15	361 003 R1	HEAD, piston
16	361 001 R11	HEAD w/two PLUG, 444 703 and two PLUG, 50 410 DA, hydraulic cylinder (piston rod end)
	444 703	PLUG, 1/2" hex-socket stl. automative (optional with 362 356 R1) (2)
	51 410 DA	PLUG, 1/8" cylinder head pipe (2)
	362 356 R1	PLUG, 1/2" cylinder head pipe (optional with 444 703) (2)
17	361 006 R11	VALVE w/SEAL, limit stop
18	350 429 R1	RING, limit stop valve retainer seal

-201-

HYDRAULIC SYSTEM

REF. NO.	PART NUMBER	DESCRIPTION
		HYDRAULIC PUMP, FLANGE AND HOSE (T-61, TD-61 and TD-91) - Continued
8	263 307 R2	FLANGE, hydraulic pump (TD-61) 3/8 x 3-1/4" hex-hd. cap SCREW (3) 3/8" lock WASHER (3)
8	355 556 R1	FLANGE, hydraulic pump (TD-91)
8	355 555 R1	FLANGE, hydraulic pump (T-61) 3/8 x 3-1/2" hex-hd. cap SCREW (3) 3/8" lock WASHER (3)
9	262 631 R91	HOSE, 3/4 x 1-3/16 x 44" long hydraulic pump pressure (T-61)
9	355 512 R92	HOSE, 1-3/16 x 50-1/2" long hydraulic pump pressure (TD-61 and TD-91)
	144 122	ELBOW, hydraulic pump flange (T-61)

HYDRAULIC CYLINDER
(T-61, TD-61 and TD-91) - Continued

19	360 599 R1	RING, limit stop valve seal
20	361 007 R11	RETAINER w/seal ring RETAINER, limit stop valve
21	361 009 R1	PLATE, limit stop valve retainer 1/4 x 9/16" hex-hd. cap SCREW (2)
22	354 047 R1	RING, cylinder piston rod gland
23	354 048 R1	SEAL, piston rod dust
24	354 049 R1	RETAINER, piston rod dust seal
25	360 372 R1	COLLAR, stroke limit plain half
26	361 010 R1	COLLAR, stroke limit flanged half
27	361 085 R91	CLAMP w/SCREW, stroke limit collar (optional with 361 087 R91)
27	361 087 R91	CLAMP w/SCREW, stroke limit collar (optional with 361 085 R91)
28	361 005 R11	ROD w/YOKE, piston
	363 138 R91	PACKAGE, 3-1/2 x 8" hydraulic cylinder seal ring (X) (Composed of -

1	RING	350 429 R1
1	RING	352 216 R1
2	RING	352 221 R1
1	RING	354 047 R1
2	RING	354 836 R1
1	RING	360 599 R1
1	SEAL	354 048 R1
2	WASHER	361 012 R1)

X - As Required

PRINTED IN UNITED STATES OF AMERICA

HYDRAULIC SYSTEM

REF. NO.	PART NUMBER	DESCRIPTION

HYDRAULIC PUMP
(Thompson) (T-61, TD-61 and TD-91)

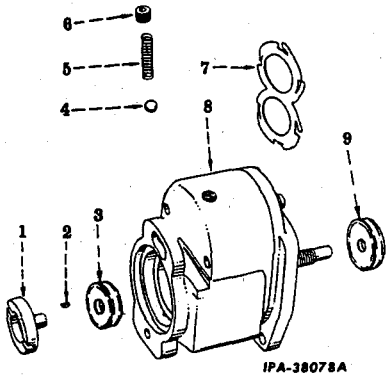

1	362 334 R1	COUPLING, ignition unit drive No. 10NF x 1-1/4" slt-fil-hd. mach. SCREW No. 10 external-tooth csk. lock WASHER
2	189 768	KEY, 3/32 x 3/8" (Woodruff)
3	356 887 R91	OIL SEAL, pump shaft (small) (See NOTE)
4	16 011 R1	BALL, chrome stl. (3/8" dia.)
5	362 335 R1	SPRING, ball check
6	369 732 R1	PLUG, ball check
7	362 337 R1	SPRING, bearing cover
8	363 780 R93	PUMP ASSEMBLY, hydraulic (optional with 355 554 R95) (TD-61 and TD-91) (Composed of - 1 BALL 16 011 R1 1 COUPLING 362 334 R1 1 KEY 189 768 1 OIL SEAL 356 887 R91 1 OIL SEAL 363 781 R91 1 PLUG 362 732 R1 1 SPRING 362 335 R1 1 SPRING 362 337 R1)
8	362 175 R93	PUMP ASSEMBLY, hydraulic (T-61) (optional with 357 214 R94) (Composed of - 1 BALL 16 011 R1 1 COUPLING 362 334 R1 1 KEY 189 768 1 OIL SEAL 356 887 R91 1 OIL SEAL 363 781 R91 1 PLUG 362 732 R1 1 SPRING 362 335 R1 1 SPRING 362 337 R1) 3/8 x 1-1/4" hex. cap SCREW 3/8 x 1-3/8" hex-hd. cap SCREW 3/8 x 3-3/4" hex-hd. cap SCREW (2) 3/8" lock WASHER (4)
9	363 781 R91	OIL SEAL, pump shaft (large) (See NOTE)
	362 331 R93	PACKAGE, hydraulic pump seal and gasket service (Composed of - 1 GASKET 261 203 R1 §1 GASKET 1 GASKET 354 952 R2 2 OIL SEAL 363 781 R91 1 OIL SEAL 356 887 R91 2 RING 350 818 R1 §2 RING)

HYDRAULIC SYSTEM

REF. NO.	PART NUMBER	DESCRIPTION

HYDRAULIC PUMP
(Pesco) (T-61, TD-61 and TD-91)

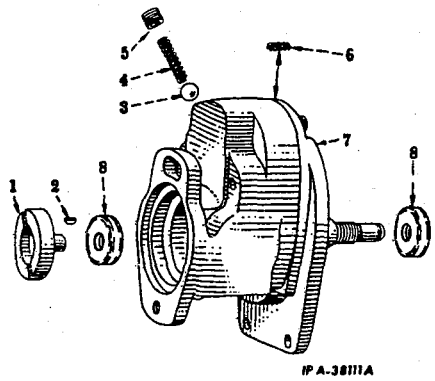

1	358 200 R1	COUPLING, ignition unit drive No. 10NF x 1-1/4" slt-fil-hd. mach. SCREW No. 10 external-tooth csk. lock WASHER
2	189 768	KEY, 3/32 x 3/8" (Woodruff)
3	16 011 R1	BALL, chrome stl. (11/32" dia.)
4	361 715 R1	SPRING, ball check
5	361 716 R1	PLUG, ball check
6	361 717 R1	SPRING, bearing cover (10)
7	355 554 R95	PUMP ASSEMBLY, hydraulic (optional with 363 780 R93) (TD-61 and TD-91) (Composed of - 1 BALL 16 011 R1 1 COUPLING 358 200 R1 1 KEY 189 768 1 PLUG 361 716 R1 2 OIL SEAL 356 887 R91 1 SPRING 361 715 R1 10 SPRING 361 717 R1)
7	357 214 R94	PUMP ASSEMBLY, hydraulic (T-61 (optional with 362 175 R93) (Composed of - 1 BALL 16 011 R1 1 COUPLING 358 200 R1 1 KEY 189 768 1 PLUG 361 716 R1 2 SEAL 356 887 R1 1 SPRING 361 715 R1 10 SPRING 361 717 R1) 3/8 x 1/4" hex-hd. cap SCREW 3/8 x 1-3/8" hex-hd. cap SCREW 3/8 x 3-3/4" hex-hd. cap SCREW (2) 3/8" lock WASHER (4)
8	356 887 R91	SEAL, oil pump shaft (2)
	356 889 R91	PACKAGE, hydraulic pump seal ring and gasket field service (X) (Composed of - 1 GASKET 261 203 R1 1 GASKET 354 952 R2 §1 GASKET 2 RING 350 818 R1 §2 RING §1 OIL SEAL 2 OIL SEAL 356 887 R91)

NOTE - Use two large OIL SEALS, 363 781 R91 for HYDRAULIC PUMP, 363 780 R91. Use one large OIL SEAL, 363 781 R91 and one small OIL SEAL, 356 887 R91 for PUMPS 363 780 R92 or 363 780 R93 and 362 175 R93.

X - As Required

§ - Not Furnished Separately

REF. NO.	PART NUMBER	DESCRIPTION

RESERVOIR, SAFETY VALVE AND CONNECTIONS
(T-61, TD-61 and TD-91)

-203-

HYDRAULIC SYSTEM

REF. NO.	PART NUMBER	DESCRIPTION

RESERVOIR, SAFETY VALVE AND CONNECTIONS
(T-61, TD-61 and TD-91) - Continued

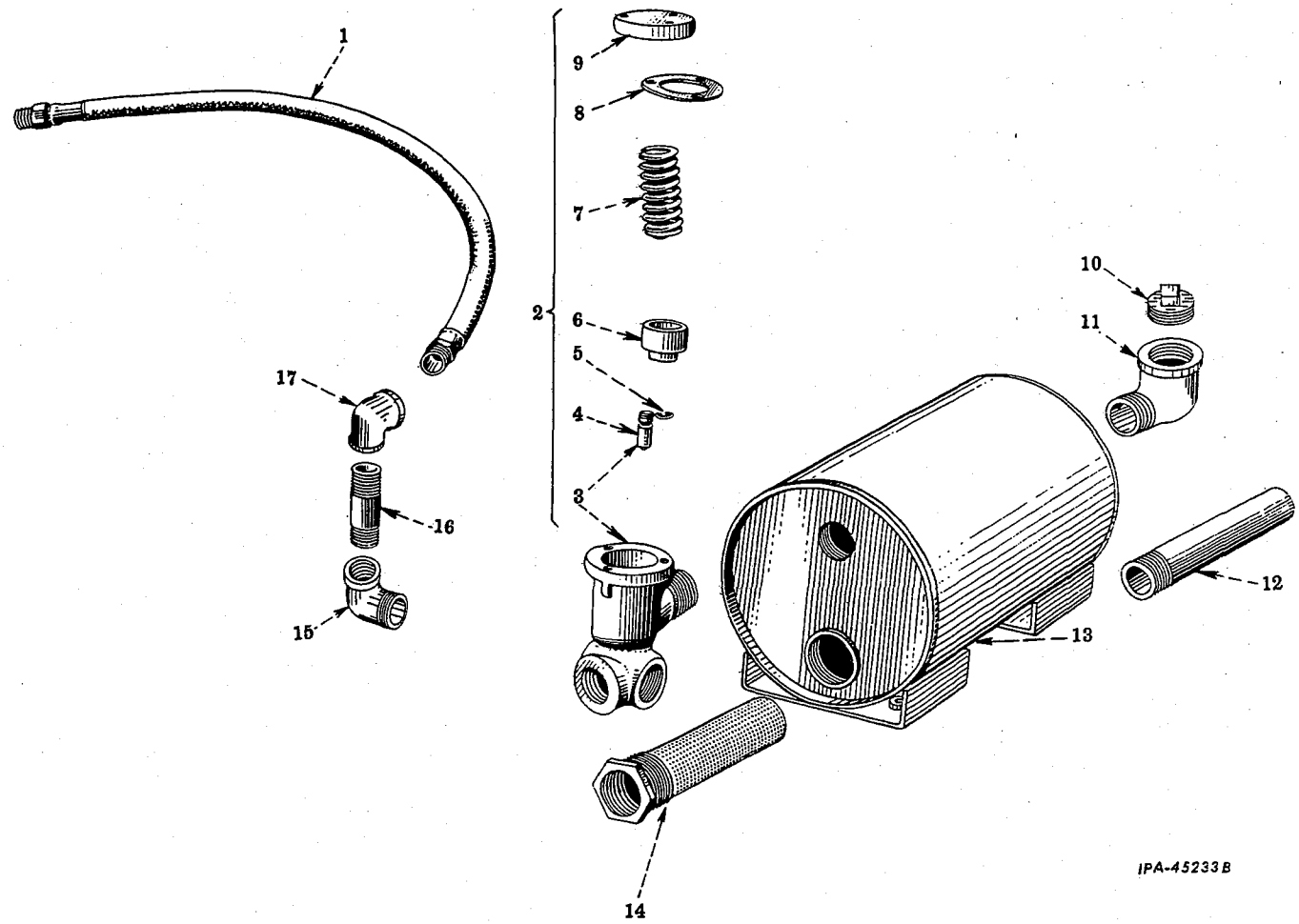

REF. NO.	PART NUMBER	DESCRIPTION
1	355 496 R92	HOSE, 29/32 x 19" long safety valve
2	355 493 R93	VALVE ASSEMBLY, safety (Composed of - 1 BODY 355 494 R21 1 COVER 354 852 R3 1 GASKET 354 856 R1 1 RING 354 854 R2 1 SLEEVE 354 851 R2 1 SPRING 354 855 R2)
3	355 494 R21	BODY w/PISTON, 354 853 R4, safety valve
4	354 853 R4	PISTON, safety valve
5	354 854 R2	RING, safety valve piston
6	354 851 R2	SLEEVE, safety valve
7	354 855 R2	SPRING, safety valve
8	354 856 R1	GASKET, safety valve cover
9	354 852 R3	COVER, safety valve 1/4 x 7/8" hex-hd. cap SCREW (3)
10	103 870	PLUG, 1" sq-hd. pipe
11	108 687	ELBOW, 1" x 90° street
12	190 566	NIPPLE, 1 x 4-3/4" pipe
13	275 930 R91	TANK, oil reservoir 3/8 x 1" hex-hd. cap SCREW (4) 3/8" lock WASHER (4)
14	354 868 R93	STRAINER, oil reservoir tank
15	108 686	ELBOW, 1/2" x 90° street
16	143 167	NIPPLE, 1/2 x 3-3/4" pipe
17	119 098	ELBOW, 1/2" x 90° pipe
	365 843 R1	FLUID, touch-control (quart) (will work for 355 382 R1)

PRINTED IN UNITED STATES OF AMERICA

DRAWBAR

REF. NO.	PART NUMBER	DESCRIPTION

DRAWBAR
(T-61, TD-61 and TD-91)

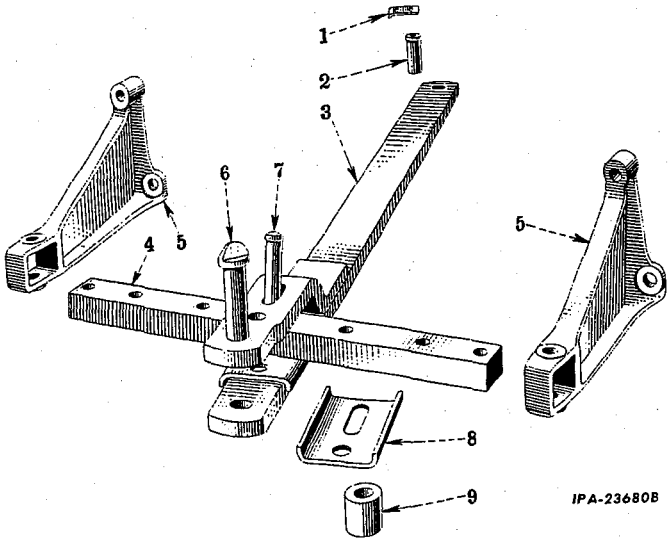

⊗ KEY TO UNITS
A - Service parts for DRAWBAR (T-61 and TD-61)
B - Service parts for DRAWBAR (TD-91)

⊗ Letters of these units correspond with those shown following the description of the parts in the list below and identifies the unit for which the part is used. Items without letters after the description indicates the part is used for all units.

1	47 772 D	LOCK, drawbar pin 3/8NF x 1" hex-hd. cap SCREW 3/8" lock WASHER
2	45 311 D	PIN, drawbar pivot (Unit A)
2	47 771 D	PIN, drawbar pivot (Unit B)
3	53 915 DA	DRAWBAR (Unit A)
3	53 921 DA	DRAWBAR (Unit B)
4	53 919 D	GUIDE, drawbar (Unit A) 3/4NF NUT (2) 3/4NF x 3-3/4" hex-hd. cap SCREW (2)
4	47 773 D	GUIDE, drawbar (Unit B) 7/8NF NUT (2) 7/8NF x 4-1/4" hex-hd. cap SCREW (2)
5	51 949 D	BRACKET, drawbar guide (2 for Unit A) 3/4NF NUT (6)
5	52 205 D	BRACKET, drawbar guide (2 for Unit B) 3/4NF NUT (6)
6	51 388 D	PIN, drawbar clevis (Unit A)
6	47 776 D	PIN, drawbar clevis (Unit B)
7	51 389 D	PIN, drawbar stop (Unit A) 1/4 x 1-1/2" cotter PIN
7	47 775 D	PIN, drawbar stop (Unit B) 1/4 x 1-1/2" cotter PIN

DRAWBAR

REF. NO.	PART NUMBER	DESCRIPTION

DRAWBAR
(T-61, TD-61 and TD-91) - Continued

8	53 920 D	PLATE, drawbar clevis wear (2 for Unit A) 7/8NF NUT 7/8NF x 5" hex-hd. cap SCREW
8	53 925 D	PLATE, drawbar clevis wear (2 for Unit B) 1"NF NUT 1"NF x 6" hex-hd. cap SCREW
9	53 918 D	SPACER, drawbar jaw (Unit A)
9	53 924 D	SPACER, drawbar jaw (Unit B)
	256 048 R11	EXTENSION, drawbar (furnished as part of reduced speed power take-off ATTACHMENT, 275 783 R91) (Unit A)

SHEET METAL FENDERS, HOOD SIDE SHEETS AND SIDE DOORS

REF. NO.	PART NUMBER	DESCRIPTION

FENDERS
(T-61 and TD-61)

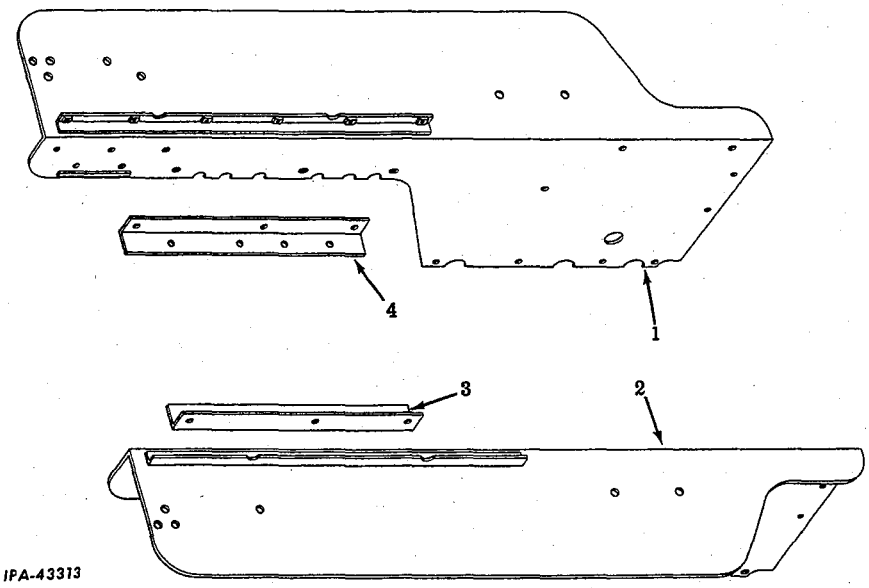

1	275 343 R11	FENDER, LH 3/8" NUT 1/2" NUT (8) 3/8 x 1" hex-hd. cap SCREW 1/2 x 1-1/4" hex-hd. cap SCREW (12) 3/8" lock WASHER 1/2" lock WASHER (12) 17/32 x 1-1/16 x 3/32" WASHER (4)
2	275 344 R11	FENDER, RH 3/8" NUT 1/2" NUT (8) 3/8 x 1" hex-hd. cap SCREW 1/2 x 1-1/4" hex-hd. cap SCREW (12) 3/8" lock WASHER 1/2" lock WASHER (12) 17/32 x 1-1/16 x 3/32" WASHER (4)

-205-

SHEET METAL FENDERS, HOOD SIDE SHEETS AND SIDE DOORS

REF. NO.	PART NUMBER	DESCRIPTION

FENDERS
(T-61 and TD-61) - Continued

3	275 320 R1	BRACKET, RH fender 1/2 x 7/8" hex-hd. cap SCREW 1/2 x 1" hex-hd. cap SCREW (3) 1/2" lock WASHER (4) 17/32 x 1-1/16 x 3/32" WASHER (4)
4	275 319 R1	BRACKET, LH fender 1/2 x 7/8" hex-hd. cap SCREW 1/2 x 1" hex-hd. cap SCREW (3) 1/2" lock WASHER (4) 17/32 x 1-1/16 x 3/32" WASHER (4)

FENDERS
(TD-91)

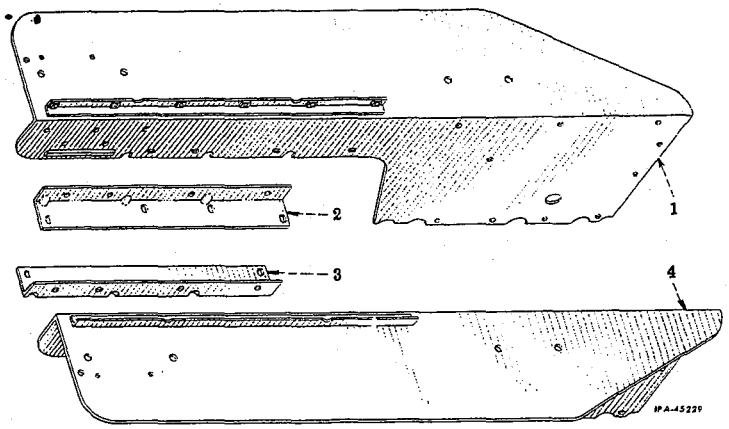

FENDERS
(TD-91) - Continued

PRINTED IN UNITED STATES OF AMERICA

SHEET METAL FENDERS, HOOD SIDE SHEETS AND SIDE DOORS

REF. NO.	PART NUMBER	DESCRIPTION

FENDERS
(TD-91) - Continued

1	275 239 R11	FENDER, LH 3/8" NUT 1/2" NUT (8) 3/8 x 1" hex-hd. cap SCREW 1/2 x 1-1/4" hex-hd. cap SCREW (13) 3/8" lock WASHER 1/2" lock WASHER (13) 17/32 x 1-1/16 x 3/32" WASHER (4)
2	275 157 R1	BRACKET, LH fender 1/2 x 7/8" hex-hd. cap SCREW 1/2 x 1" hex-hd. cap SCREW (3) 1/2" lock WASHER (4) 17/32 x 1-1/16 x 3/32" WASHER (4)

HOOD AND SIDE SHEETS
(T-61 and TD-61)

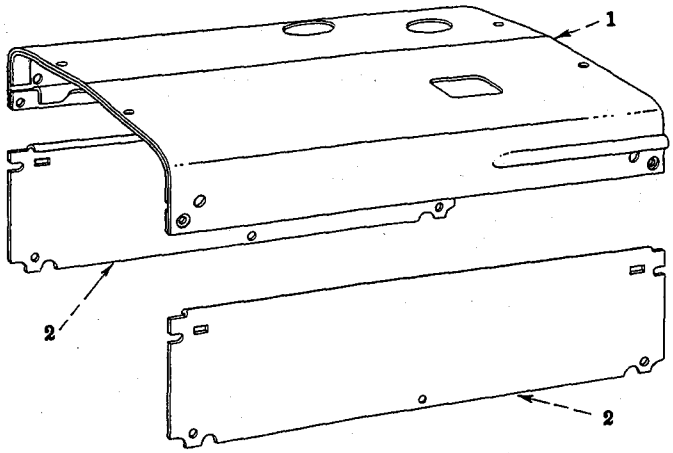

IPA-43014A

1	276 441 R11	SHEET, hood (will work for 275 368 R11) (TD-61)
1	276 443 R11	SHEET, hood (will work for 275 367 R11) (T-61) 3/8 x 3/4" hex-hd. cap SCREW (4) 3/8 x 3/4" slt-fl-hd. mach. SCREW (2) 3/8 x 1-3/8" slt-fl-hd. mach. SCREW (2) 3/8" NUT (4) 3/8" lock WASHER (8)
	O 1 504	WASHER, 13/32 x 7/8" x No. 16 ga. (4)
2	51 594 DA	SHEET, engine side (not hydraulic remote control) (2) 3/8 x 3/4" hex-hd., cap SCREW (10) 3/8" lock WASHER (10) 13/32 x 13/16" x No. 16 ga. WASHER (4)
2	51 594 DA	SHEET, LH engine side (used with hydraulic remote control)
2	262 638 R1	SHEET, RH engine side (used with hydraulic remote control) 3/8 x 3/4" hex-hd. cap SCREW (5) 3/8" lock WASHER (5) 13/32 x 13/16" x No. 16 ga. WASHER (2)

-206-

SHEET METAL FENDERS, HOOD SIDE SHEETS AND SIDE DOORS

REF. NO.	PART NUMBER	DESCRIPTION

FENDERS
(TD-91) - Continued

3	275 158 R1	BRACKET, RH fender 1/2 x 7/8" hex-hd. cap SCREW 1/2 x 1" hex-hd. cap SCREW (3) 1/2" lock WASHER (4) 17/32 x 1-1/16 x 3/32" WASHER (4)
4	275 240 R11	FENDER, RH 3/8" NUT 1/2" NUT (8) 3/8 x 1" hex-hd. cap SCREW 1/2 x 1-1/4" hex-hd. cap SCREW (13) 3/8" lock WASHER 1/2" lock WASHER (13) 17/32 x 1-1/16 x 3/32" WASHER (4)

HOOD AND SIDE SHEETS
(TD-91)

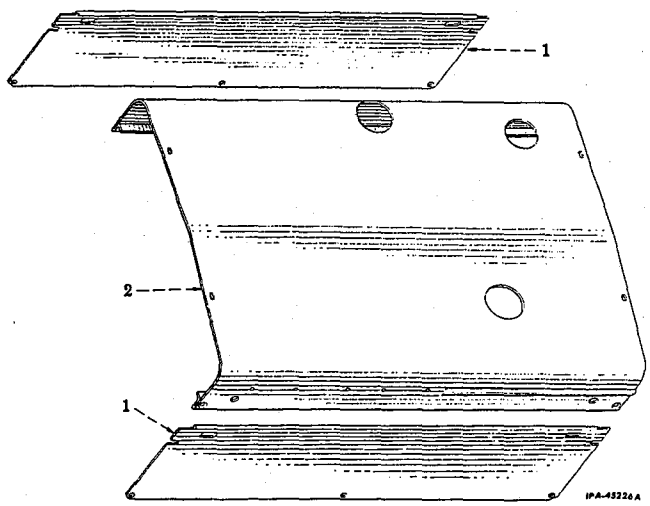

IPA-45226A

1	51 547 D	SHEET, engine side (2)
1	51 547 D	SHEET, LH engine side (used with hydraulic remote control)
1	262 655 R1	SHEET, RH engine side (used with hydraulic remote control) 3/8 x 3/4" hex-hd. cap SCREW (5) 3/8" lock WASHER (5) 13/32 x 13/16" x No. 16 ga. WASHER (2)
2	276 133 R11	SHEET, hood (will work for 275 257 R11) 3/8" NUT (4) 3/4 x 3/4" hex-hd. cap SCREW (4) 3/8 x 3/4" slt-fl-hd. mach. SCREW (2) 3/8 x 1-3/8" slt-fl-hd. mach. SCREW (2) 3/8" lock WASHER (8)
	O 1 504	WASHER, 13/32 x 7/8" x No. 16 ga. (4)

PRINTED IN UNITED STATES OF AMERICA

SHEET METAL FENDERS, HOOD SIDE SHEETS AND SIDE DOORS

REF. NO.	PART NUMBER	DESCRIPTION

HOOD SIDE DOORS
(T-61, TD-61 and TD-91)

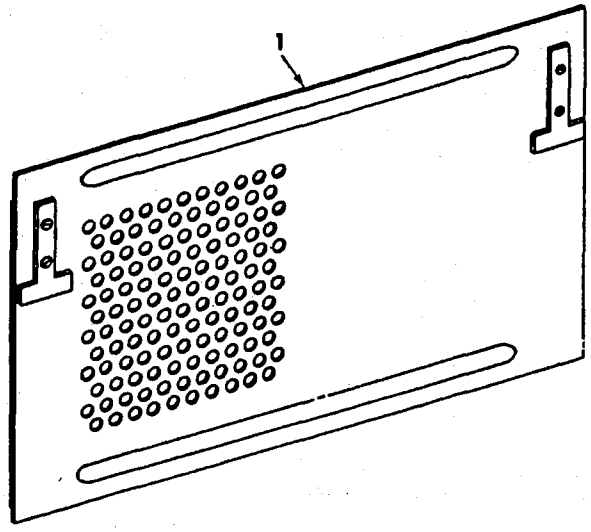

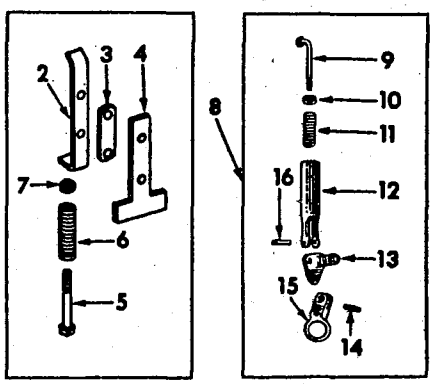

IPA-43240A

⊗ - KEY TO UNITS

A -	277 869 R91	ATTACHMENT, hood side doors (will work for 275 794 R91) (See NOTE) (T-61 and TD-61)
B -	277 877 R91	ATTACHMENT, hood side doors (will work for 275 296 R91) (See NOTE) (TD-91)

⊗ Letters of these units correspond with those shown following the description of the parts in the list below and identifies the unit for which the part is used. Items without letters after the description indicates the part is used for all units.

1	275 297 R11	DOOR w/LATCH, 27 159 DB, LH hood side (order 277 878 R11) (Unit B)
1	277 878 R11	DOOR w/LOCK ASSEMBLY, LH hood side (will work for 275 297 R11) (Unit B) (Composed of - 2 LOCK 277 874 R11; 2 PLATE 278 403 R2; 2 SPACER 277 876 R1; 2 SPRING 250 164 R1)
1	275 795 R11	DOOR w/LATCH, 27 159 DB, LH hood side (order 277 870 R11) (Unit A)
1	277 870 R11	DOOR w/LOCK ASSEMBLY, LH hood side (will work for 275 795 R11) (Unit A) (Composed of - 2 LOCK 277 874 R11; 2 PLATE 278 403 R2; 2 SPACER 277 876 R1; 2 SPRING 250 164 R1)
1	275 297 R11	DOOR w/LATCH, 27 159 DB, RH hood side (order 277 879 R91) (Unit B)
1	277 879 R11	DOOR w/LOCK ASSEMBLY, RH hood side (will work for 275 297 R11) (Unit B) (Composed of - 2 LOCK 277 874 R11; 2 PLATE 278 403 R2; 2 SPACER 277 876 R1; 2 SPRING 250 164 R1)
1	275 795 R11	DOOR w/LATCH, 27 159 DB, RH hood side (order 277 871 R11) (Unit A)
1	277 871 R11	DOOR w/LOCK ASSEMBLY, RH hood side (will work for 275 795 R11) (Unit A) (Composed of - 2 LOCK 277 874 R11; 2 PLATE 278 403 R2; 2 SPACER 277 876 R1; 2 SPRING 250 164 R1)

SHEET METAL FENDERS, HOOD SIDE SHEETS AND SIDE DOORS

REF. NO.	PART NUMBER	DESCRIPTION

HOOD SIDE DOORS
(T-61, TD-61 and TD-91) - Continued

2	277 874 R11	LOCK, latch (4)
3	277 876 R1	SPACER, latch (4)
4	278 403 R2	PLATE, latch (4) 5/16 x 7/8" slt-fl-hd. mach. SCREW (8)
5		SCREW, 5/16 x 3-1/4" hex-hd. cap (4)
6	250 164 R1	SPRING, latch (4)
7		NUT, 5/16" (4)
8	27 159 DB	LATCH ASSEMBLY, hood side door (optional with 258 222 R92) (used with DOOR, 275 297 R11 and 275 795 R11) (4) (Composed of - 1 BOLT 58 099 DA; 1 BRACKET 8 817 D; 1 GUIDE 58 101 D; 1 HOLDER 8 815 D; 1 PIN 58 103 D; 1 PIN G 9 210; 1 SPRING 64 159 D; 1 TOGGLE 8 816 D)
8	258 222 R92	LATCH, hood side door (optional with 27 159 DB) (used with DOOR, 275 297 R11 and 275 795 R11) (4)
9	58 009 DA	BOLT, hood fastener spring (4) 5/16" NUT (4)
10	58 101 D	GUIDE, hood fastener spring bolt (4)
11	64 159 D	SPRING, hood fastener (4)
12	8 815 D	HOLDER, hood fastener spring (4)
13	8 817 D	BRACKET, hood fastener (4) 3/16 x 3/8" rd-hd. RIVET (12)
14	58 103 D	PIN, hood fastener toggle (4)
15	8 816 D	TOGGLE, hood fastener (4)
16	G 9 210	PIN, hood fastener spring (4)

NOTE - Factory Application - Order on Machine Order Form.
Field Application - Order through Regular Service Parts Channels.

SEAT AND SUPPORTS
(T-61, TD-61 and TD-91)

SEAT AND SUPPORTS - Continued
(T-61, TD-61 and TD-91)

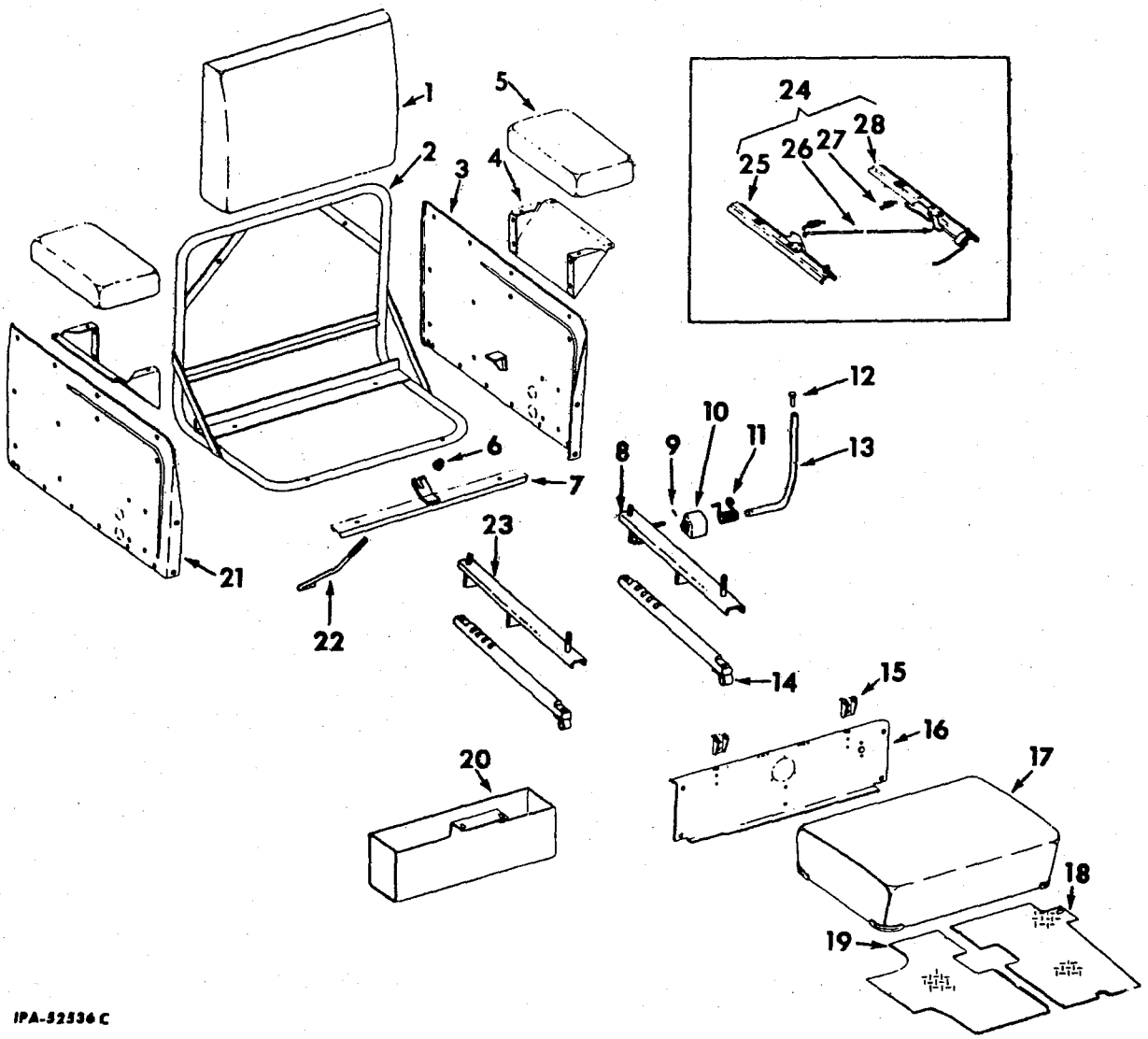

Ref. No.	IH Part Number	Description
1	273 499 R91	CUSHION, back seat 5/16 x 3/4" hex-hd cap SCREW (2) 5/16" lock WASHER (2) 11/32 x 11/16" WASHER (2)
2		FRAME, seat (order seat frame parts PACKAGE, 307 320 R91) (will work for 275 272 R92)
2	307 312 R91	FRAME, seat 5/16NF NUT (2)
	307 315 R1	NUT, seat cushion bottom pilot (2) 5/16" internal-tooth lock WASHER (4)
3	275 258 R21	SHEET, LH seat side 3/8 x 3/4" hex-hd cap SCREW (6) 3/8NF x 5/8" hex-hd cap SCREW (6) 3/8" lock WASHER (12)
4	252 172 R11	SUPPORT, seat cushion side (2) 3/8 x 3/4" hex-hd cap SCREW (8) 3/8" lock WASHER (8)
5	272 239 R92	CUSHION, seat side (2)
6	266 383 R2	NUT, seat hold down rod 13/ 32 x 13/16 x .065" WASHER
7	275 266 R1	SUPPORT, rear seat
8	307 317 R11	CHANNEL, LH seat frame slide (order PACKAGE, 331 606 R91)
8	331 596 R91	CHANNEL, LH seat frame slide (*)

(*) - Used only on units equipped with PACKAGE, 331 606 R91.

SEAT AND SUPPORTS - Continued
(T-61, TD-61 and TD-91)

Ref. No.	IH Part Number	Description
9	19 371 R1	PIN, 1/8 x 3/4" spiral (*)
10	331 595 R1	LOCK, seat (*)
11	331 594 R1	SPRING, latch torsion (*)
12	331 591 R1	PLUG, seat adjusting handle (*)
13	331 592 R1	HANDLE, seat adjusting (*)
14	316 825 R91	RAIL, seat frame slide (will work for 307 316 R1) (2) 5/16 NF NUT (4) 5/16NF x 1-1/4" hex-hd cap SCREW (4) 5/16" lock WASHER (4)
15	275 268 R1	BRACKET, seat hinge (2) 1/4NF NUT (4) 1/4 x 3/4" hex-hd cap SCREW (4) 1/4" lock WASHER (4) 9/32 x 5/8 x 1/16" WASHER (4)
16	275 262 R31	SUPPORT w/two FASTENER, 275 263 R1 and four RIVET, 9 400 978, front seat 3/8NF NUT (4) 3/8NF x 3/4" hex-hd cap SCREW (4) 3/8" lock WASHER (4)
17	273 500 R92	CUSHION, bottom seat
18	275 230 R31	PLATFORM, LH (TD-91) 3/8 x 3/4" hex-hd cap SCREW 3/8" lock WASHER
18	275 303 R11	PLATFORM, LH (T-61 and TD-61) 3/8 x 3/4" hex-hd cap SCREW 3/8" lock WASHER
19	275 231 R31	PLATFORM, RH (TD-91) 3/8 x 3/4" hex-hd cap SCREW 3/8" lock WASHER
19	275 304 R11	PLATFORM, RH (T-61 and TD-71) 3/8NF NUT 3/8 x 3/4" hex-hd cap SCREW (2) 3/8" lock WASHER (3) 13/32 x 13/16 x 1/16" WASHER (2)
20	275 248 R91	BOX w/two STUD, 275 264 R1 and two PIN, 275 265 R1, tool
21	275 259 R21	SHEET, RH seat side 3/8 x 3/4" hex-hd cap SCREW (6) 3/8NF x 5/8" hex-hd cap SCREW (6) 3/8" lock WASHER (12)
22	276 975 R1	ROD, seat hold down 1/8 x 5/8" cotter PIN
23	307 317 R12	CHANNEL, RH seat frame slide (+)
24	273 162 R92	RAIL, slide (order CHANNEL, 307 317 R11 and RAIL, 307 316 R1)
25	273 100 R1	ADJUSTER, RH seat (order two RAIL, 316 825 R91 and two CHANNEL, 307 317 R12)
26	276 576 R1	ROD, slide rail connecting (used with RAIL ASSY, 273 162 R92)
27	273 103 R1	SPRING, seat adjuster (used with RAIL ASSY, 273 162 R92) (2)
28	273 101 R1	ADJUSTER, LH seat (order two RAIL, 316 825 R91 and two CHANNEL, 307 317 R12)
	275 263 R1	FASTENER, tool box (2)
	9 400 978	RIVET, 1/8 x 5/16" -100° csk-hd aluminum (4)

-209-
SEAT AND SUPPORTS

SEAT AND SUPPORTS - Continued
(T-61, TD-61 and TD-91)

Ref. No.	IH Part Number	Description
	331 606 R91	PACKAGE, seat slide rail lock field improvement (Consists of - 1 CHANNEL 331 596 R91 1 HANDLE 331 592 R1 1 LOCK 331 595 R1 1 PIN 19 371 R1 1 PLUG 331 591 R1 1 SPRING 331 594 R1)
	46 883 H	PIN, seat hinge (3/8 x 1-9/16" rod end pin) (2) 3/32 x 5/8" cotter PIN (2)
	275 265 R1	PIN, tool box fastener wing head stud (2)
	307 320 R91	PACKAGE, seat frame parts (will work for 275 272 R92) (Consists of - 1 FRAME 307 312 R91 2 NUT 307 315 R91 2 RAIL 307 316 R91 2 CHANNEL 307 317 R91)
	275 264 R1	STUD, tool box fastener wing head (2)
	275 306 R11	SUPPORT, RH platform (T-61 and TD-61) 3/8" NUT (2) 3/8 x 1" hex-hd cap SCREW (2) 3/8" lock WASHER (2)
	275 229 R11	SUPPORT, RH platform (TD-91) 3/8" NUT (3) 3/8 x 1" hex-hd cap SCREW (3) 13/32 x 13/16 x 1/16" WASHER (3) 3/8" lock WASHER (3)
	275 305 R11	SUPPORT, LH platform (T-61 and TD-61) 3/8" NUT (2) 3/8 x 1" hex-hd cap SCREW (2) 3/8" lock WASHER (2)
	275 228 R11	SUPPORT, LH platform (TD-91) 3/8" NUT (3) 3/8 x 1" hex-hd cap SCREW (3) 3/8" lock WASHER (3) 13/32 x 13/16 x 1/16" WASHER (3)

(+) - Used only on units equipped with seat frame parts package.
(*) - Used only on units equipped with PACKAGE, 331 606 R91.

-210-
ENGINE CONTROLS, DASH, INSTRUMENTS AND INSTRUMENT PANEL (T-61)

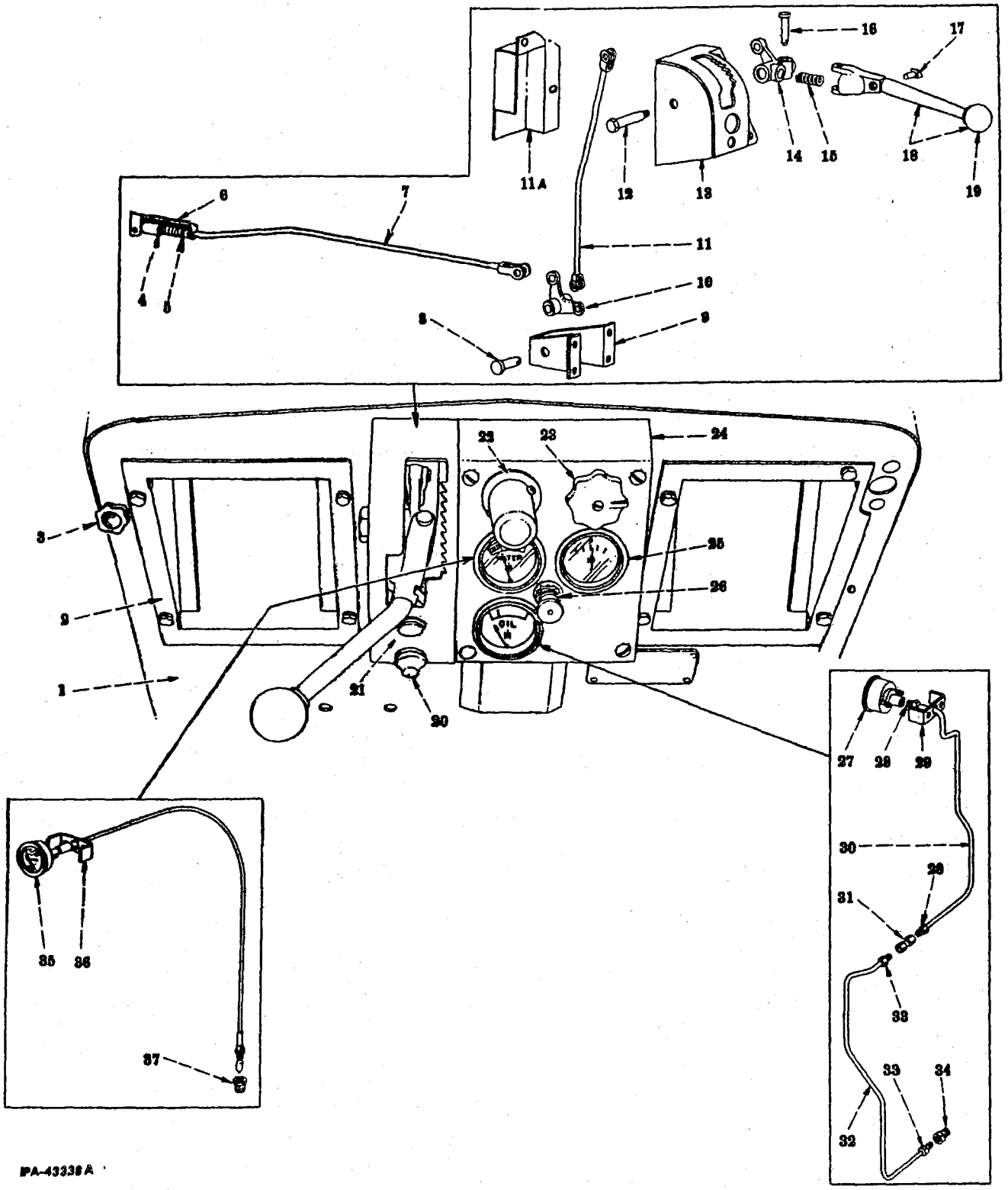

PA-43338A

PRINTED IN UNITED STATES OF AMERICA

ENGINE CONTROLS, DASH, INSTRUMENTS AND INSTRUMENT PANEL (T-61)

REF. NO.	PART NUMBER	DESCRIPTION
1	275 300 R11	DASH 1/2 x 1" hex-hd. cap SCREW (4) 1/2" lock WASHER (4) 9/16 x 1-1/4" x 12 ga. WASHER (2)
2	275 207 R91	POCKET, dash foot (2) 1/4 x 1/2" hex-hd. cap SCREW (8) 1/4" lock WASHER (8)
3	275 346 R11	ROD w/BUTTON, choke control 1/16 x 5/8" cotter PIN
4	275 355 R1	SPACER, governor control rod spring
5	261 650 R1	SPRING, governor control rod 5/16 x 31/32 rod end PIN (governor control rod trunnion) 3/32 x 5/8" cotter PIN
6	261 690 R11	TRUNNION w/GUIDE, governor control rod
7	275 352 R11	ROD w/YOKE, governor control front 5/16NF jam NUT (2) 5/16 x 31/32 rod end PIN (control rod front clevis governor) 3/32 x 5/8" cotter PIN
8	275 211 R1	PIN, governor control rod bellcrank 1/8 x 1" cotter PIN
9	275 245 R11	SUPPORT, governor control rod bellcrank 3/8NF x 5/8" hex-hd. cap SCREW 3/8NF x 3/4" hex-hd. cap SCREW 3/8" lock WASHER (2)
10	275 212 R2	BELLCRANK, governor control rod
11	275 213 R11	ROD w/two CLEVIS, rear governor control 5/16 x 31/32" rod end PIN (governor control rod rear yoke) (2) 3/32 x 5/8" cotter PIN (2)
11A	278 755 R1	SHIELD, dash heat
12	275 199 R1	SHAFT, governor control hand lever 1/2" lock WASHER
13	275 237 R91	RATCHET, governor control 3/8" NUT 3/8 x 5/8" hex-hd. cap SCREW (4) 3/8" lock WASHER (4)
14	275 197 R1	HUB, governor control hand lever
15	261 650 R1	SPRING, governor control hand lever
16	262 704 R1	PIN, governor control hand lever 3/32 x 5/8" cotter PIN
17	251 846 R1	PAWL, governor control hand lever
18	275 198 R21	LEVER w/PAWL, 251 846 R1 and BALL, 264 097 R2, governor control
19	264 097 R2	BALL, governor control hand lever
20	271 179 R1	SWITCH ASSEMBLY, starting (for components see list of parts under details of "Starting Switch")
21	178 020	PLUG, button (29/32" dia.) (cigarette lighter)
22	271 077 R91	LIGHT, dash (for components see list of parts under details of "Dash Light")
23	275 282 R91	SWITCH, lighting (for components see list of parts under details of "Lighting Switch")
24	275 345 R1	PANEL, instrument 1/4" NUT (4) 1/4 x 1/2" slt-rd-hd. mach. SCREW (4) 1/4" lock WASHER (4)

-211-

ENGINE CONTROLS, DASH, INSTRUMENTS AND INSTRUMENT PANEL (T-61)

REF. NO.	PART NUMBER	DESCRIPTION
25	269 467 R92	AMMETER
26	62 801 DC	SWITCH, ignition (for components see list of parts under details of "Ignition Switch")
27	258 634 R93	INDICATOR w/CLAMP, 60 805 D, engine oil pressure
28	29 898 D	NUT, upper engine oil pressure indicator tube coupling (2)
29	60 805 D	CLAMP (engine oil pressure indicator) No. 12 NUT (2) No. 12 external-tooth lock WASHER (2)
30	275 369 R11	TUBE w/two NUTS, 29 898 D, upper engine oil pressure indicator
31	89 863 H	UNION, engine oil pressure tube (upper to lower tube)
32	275 370 R11	TUBE w/two NUTS, 29 898 D, engine oil pressure indicator (lower)
33	29 898 D	NUT, engine oil pressure indicator tube coupling (lower) (2)
34	29 901 D	COUPLING, engine oil pressure indicator half-union (in engine)
35	281 195 R91	INDICATOR w/BUSHING, 51 510 D and CLAMP, 50 417 D, heat
35	63 782 D	INDICATOR w/BUSHING, 51 510 D and CLAMP, 50 417 D, heat (low boiling point)
36	50 417 D	CLAMP (heat indicator No. 12 NUT (2) No. 12 lock WASHER (2)
37	51 510 D	BUSHING, reducing
	255 876 R91	ATTACHMENT, low boiling point thermostat and heat indicator (consists of THERMOSTAT, 261 590 R92 and INDICATOR, 63 782 D) (also listed in "Fan, Thermostat and Water Pump") (See NOTE)
	264 309 R91	CLIP, engine oil pressure indicator lower tube No. 10 NUT No. 10 x 1/2" slt-rd-hd. mach. SCREW No. 10 lock WASHER
	2 750 005 R1	DECAL, shifting diagram (will work for 275 238 R1) (not used with speed reverse transmission attachment)
	275 249 R11	SUPPORT, instrument panel 3/8" NUT 3/8 x 1/2" hex-hd. cap SCREW (2) 3/8" lock WASHER (2)

NOTE - Factory Application - Order on Machine Order Form.
Field Application - Order through Regular Service Parts Channels.

PRINTED IN UNITED STATES OF AMERICA

ENGINE CONTROLS, DASH, INSTRUMENTS AND INSTRUMENT PANEL (TD-61)

-212-

ENGINE CONTROLS, DASH, INSTRUMENTS AND INSTRUMENT PANEL (TD-61)

REF. NO.	PART NUMBER	DESCRIPTION

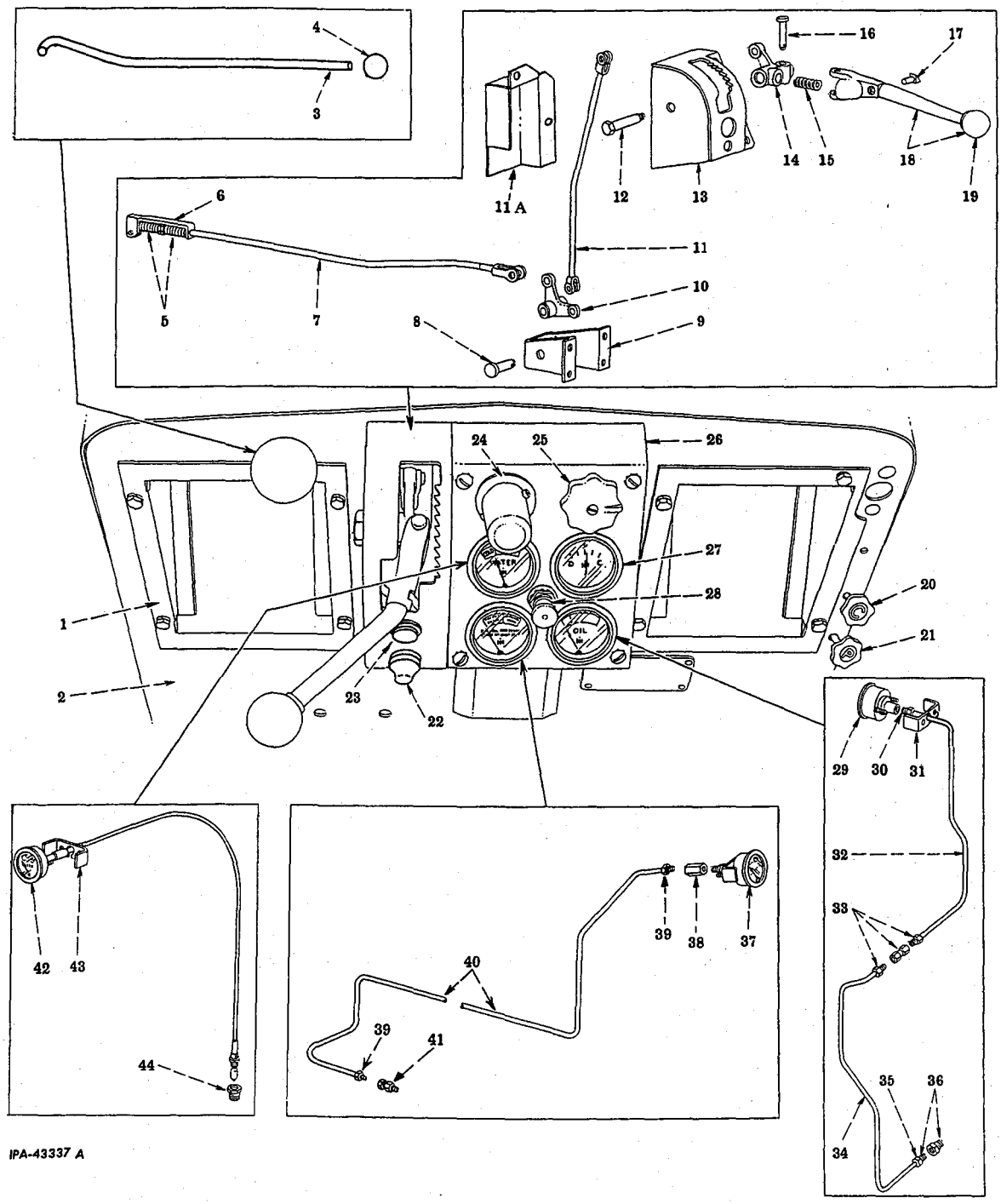

IPA-43337 A

REF. NO.	PART NUMBER	DESCRIPTION
1	275 207 R91	POCKET, dash foot (2) 1/4 x 1/2" hex-hd. cap SCREW (8) 1/4" lock WASHER (8)
2	275 300 R11	DASH 1/2 x 1" hex-hd. cap SCREW (2) 1/2 x 2" hex-hd. cap SCREW (2) 1/2" lock WASHER (4) 9/16 x 1-1/4" x No. 12 ga. WASHER (2)
3	275 350 R1	ROD, compression release 1/8 x 3/4" cotter PIN
4	264 097 R2	BALL, compression release rod
5	261 650 R1	SPRING, governor control rod (2) 5/16 x 31/32" rod end PIN (governor control rod trunnion) 3/32 x 5/8" cotter PIN

PRINTED IN UNITED STATES OF AMERICA

ENGINE CONTROLS, DASH, INSTRUMENTS AND INSTRUMENT PANEL (TD-61)

REF. NO.	PART NUMBER	DESCRIPTION
6	261 690 R11	TRUNNION w/GUIDE, governor control rod
7	275 353 R11	ROD w/YOKE, front governor control 5/16NF jam NUT (2) 5/16 x 31/32" rod end PIN (control rod front clevis governor) 3/32 x 5/8" cotter PIN
8	275 211 R1	PIN, governor control rod bellcrank 1/8 x 1" cotter PIN
9	275 245 R11	SUPPORT, governor control rod bellcrank 3/8NF x 5/8" hex-hd. cap SCREW 3/8NF x 3/4" hex-hd. cap SCREW 3/8" lock WASHER (2)
10	275 212 R2	BELLCRANK, governor control rod
11	275 213 R11	ROD w/two CLEVIS, rear governor control 5/16 x 31/32" rod end PIN (governor control rod rear YOKE) (2) 3/32 x 5/8" cotter PIN (2)
11A	278 755 R1	SHIELD, heat dash
12	275 199 R1	SHAFT, governor control hand lever 1/2NF jam NUT 1/2" lock WASHER
13	275 237 R91	RATCHET, governor control 3/8" NUT 3/8 x 5/8" hex-hd. cap SCREW (4) 3/8" lock WASHER (4)
14	275 197 R1	HUB, governor control hand lever
15	261 650 R1	SPRING, governor control hand lever
16	262 704 R1	PIN, governor control hand lever 3/32 x 5/8" cotter PIN
17	251 846 R1	PAWL, governor control hand lever
18	275 198 R21	LEVER w/PAWL, 251 846 R1 and BALL, 264 097 R2, governor control hand
19	264 097 R2	BALL, governor control hand lever
20	275 349 R11	ROD w/BUTTON, choke control 1/16 x 5/8" cotter PIN
21	275 351 R11	ROD w/BUTTON, carburetor fuel adjustment
22	271 179 R1	SWITCH ASSEMBLY, starting (for components see list of parts under details of "Starting Switch")
23	178 020	PLUG, button (29/32" dia.)
24	271 077 R91	LIGHT, dash (for components see list of parts under details of "Dash Light")
25	275 282 R91	SWITCH, lighting (for components see list of parts under details of "Lighting Switch")
26	275 251 R1	PANEL, instrument 1/4" NUT 1/4 x 1/2" slt-rd-hd. mach. SCREW (4) 1/4" lock WASHER (4)
27	269 467 R92	AMMETER
28	62 801 DC	SWITCH, ignition (for components see list of parts under details of "Ignition Switch")
29	258 634 R93	INDICATOR w/CLAMP, 60 805 D, engine oil pressure
30	29 898 D	NUT, upper engine oil pressure indicator tube coupling (2)
31	60 805 D	CLAMP (engine oil pressure indicator) No. 12 (type B) NUT (2) No. 12 external-tooth lock WASHER (2)
32	275 369 R11	TUBE w/two NUTS, 29 898 D, upper engine oil pressure indicator
33	89 863 H	UNION, engine oil pressure tube (upper to lower tube)
34	275 370 R11	TUBE w/two NUTS, 29 898 D, lower engine oil pressure indicator

-213-

ENGINE CONTROLS, DASH, INSTRUMENTS AND INSTRUMENT PANEL (TD-61)

REF. NO.	PART NUMBER	DESCRIPTION
35	29 898 D	NUT, lower engine oil pressure indicator tube coupling (2)
36	29 901 D	COUPLING, engine oil pressure indicator half-union (in engine)
37	269 976 R91	INDICATOR, fuel pressure
38	257 523 R1	CONNECTOR, fuel oil pressure indicator tube (in indicator) (TD-61 40788 up)
39	29 898 D	NUT, fuel oil pressure indicator tube coupling (TD-61 38951 to 40787) (2)
40	275 371 R21	TUBE w/two NUTS, 39 898 D, fuel pressure indicator (will work for 275 371 R11 and 275 372 R11) (order 278 899 R1 together with one tee UNION, 278 900 R1, one NUT, 29 898 D, one NUT, 37 165 D and one PLUG, 258 995 R1)
40	278 899 R1	TUBE, fuel pressure indicator tube (TD-61 40788 up)
41	29 901 D	CONNECTOR, fuel oil pressure gauge (in pump) (TD-61 39512 up)
42	281 195 R91	INDICATOR w/BUSHING, 51 510 D and CLAMP, 50 417 D, heat
42	63 782 D	INDICATOR w/BUSHING, 51 510 D and CLAMP, 50 417 D, heat (low boiling point)
43	50 417 D	CLAMP (heat indicator) No. 12 NUT (2) No. 12 external-tooth lock WASHER (2)
44	51 510 D	BUSHING, reducing
	255 876 R91	ATTACHMENT, low boiling thermostat and heat indicator (Consists of THERMOSTAT, 261 590 R92 and INDICATOR, 63 782 D) (also listed in "Fan, Thermostat and Water Pump") (See NOTE)
	272 245 R91	CLIP, fuel oil pressure indicator tube
	264 309 R91	CLIP, engine oil pressure indicator lower tube No. 10 NUT No. 10 x 1/2" slt-rd-hd. mach. SCREW No. 10 lock WASHER
	271 226 R91	COUPLING, carburetor fuel adjustment rod 1/16 x 5/8" cotter PIN (2)
	2 750 005 R1	DECAL, shifting diagram (not used with two speed reverse transmission attachment)
	30 402 D	ELBOW, fuel oil pressure indicator lower tube (TD-61 38951 to 39511)
	37 165 D	NUT, hi-duty tee union ⊕ (TD-61 40788 up)
	29 898 D	NUT, hi-duty tee union ⊕ (TD-61 40788 up)
	258 995 R1	PLUG, pressure hole gauge (in pump) (TD-61 40788 up)
	275 216 R1	SPRING, compression release rod No. 10 machine screw NUT (2) No. 10 x 3/8" slt-rd-hd. mach. SCREW (2) No. 10 lock WASHER (light) (2)
	275 249 R11	SUPPORT, instrument panel 3/8" NUT 3/8 x 1/2" hex-hd. cap SCREW (2) 3/8" lock WASHER (2)
	278 900 R1	TEE, fuel pressure tube union ⊕
	255 828 R11	UNION, fuel oil pressure indicator tube elbow (TD-61 38951 to 39511)

⊕ - Also See "Fuel Injection Pump Pipes, Gear and Connection".
NOTE - Factory Application - Order on Machine Order Form.
Field Application - Order through Regular Service Parts Channels.

PRINTED IN UNITED STATES OF AMERICA

ENGINE CONTROLS, DASH, INSTRUMENTS AND INSTRUMENT PANEL (TD-91)

-214-

ENGINE CONTROLS, DASH, INSTRUMENTS AND INSTRUMENT PANEL (TD-91)

REF. NO.	PART NUMBER	DESCRIPTION

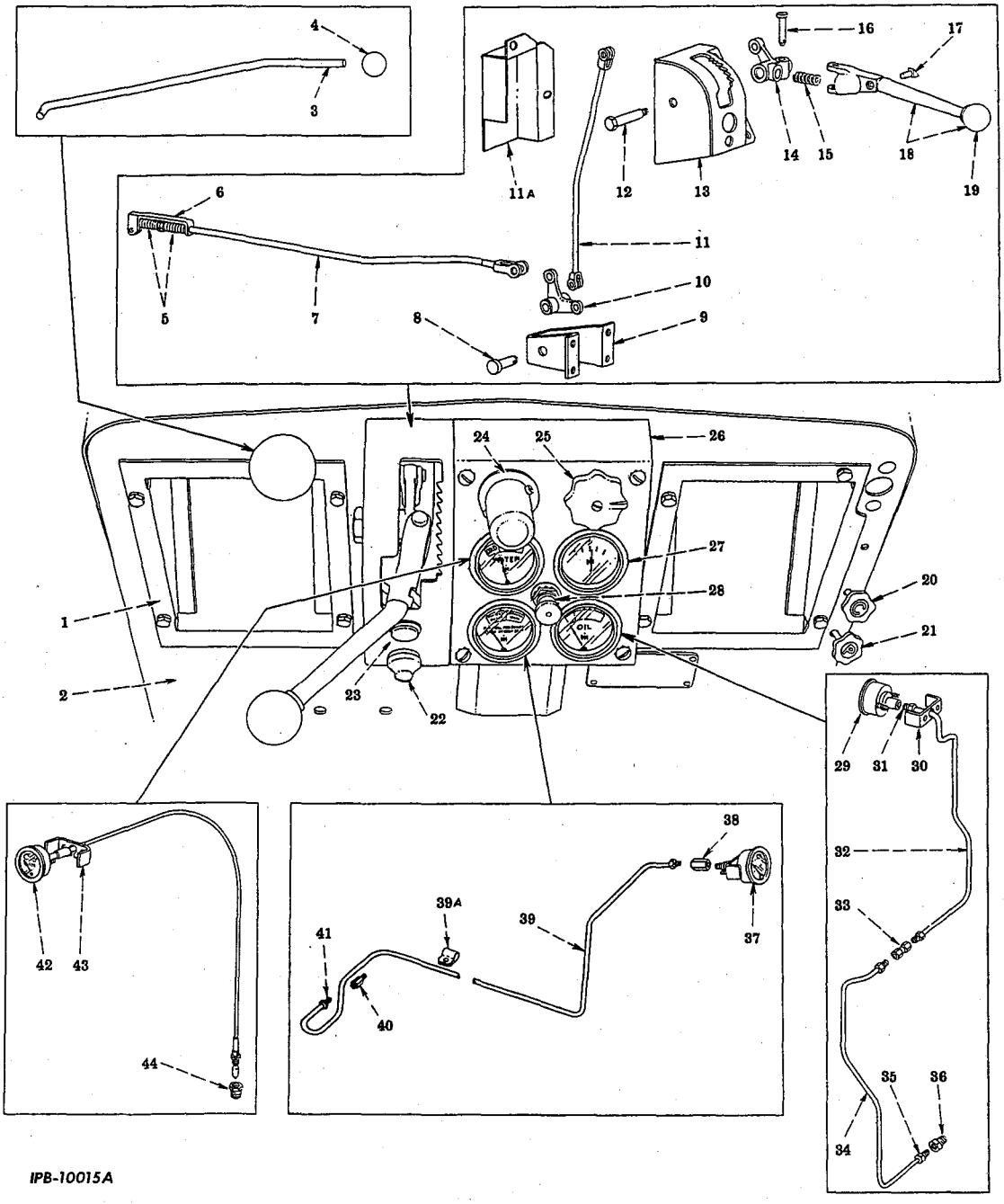

IPB-10015A

1	275 207 R91	POCKET, foot, dash (2) 1/4 x 1/2" hex-hd. cap SCREW (8) 1/4" lock WASHER (8)
2	275 204 R11	DASH 1/2 x 1-1/8" hex-hd. cap SCREW (2) 5/8 x 2" hex-hd. cap SCREW (2) 1/2" lock WASHER (2) 9/16 x 1-3/8" x No. 12 ga. WASHER (X)
3	275 215 R1	ROD, compression release (TD-91M 501 to 6007)
3	279 243 R1	ROD, compression release (TD-91M 6008 up) 1/8 x 3/4" cotter PIN
4	264 097 R2	BALL, compression release rod
5	261 650 R1	SPRING, governor control rod (2) 5/16 x 31/32" rod end PIN (governor control rod trunnion) 3/32 x 5/8" cotter PIN

X - As Required

PRINTED IN UNITED STATES OF AMERICA

ENGINE CONTROLS, DASH, INSTRUMENTS AND INSTRUMENT PANEL (TD-91)

REF. NO.	PART NUMBER	DESCRIPTION
6	261 690 R11	TRUNNION w/GUIDE, governor control rod
7	275 214 R11	ROD w/CLEVIS, front governor control 5/16NF jam NUT (2) 5/16 x 31/32" rod end PIN (governor control rod front clevis) 3/32 x 5/8" cotter PIN
8	275 211 R1	PIN, governor control rod bellcrank 1/8 x 1" cotter PIN
9	275 245 R1	SUPPORT, governor control rod bellcrank (together w/two NUT, 103 026 will work for 275 524 R11) 3/8NF x 5/8" hex-hd. cap SCREW (2) 3/8" lock WASHER (2)
10	275 212 R2	BELLCRANK, governor control rod
11	275 213 R11	ROD w/two CLEVER, rear governor control 5/16 x 31/32" rod end PIN (governor control rod rear clevis) (2) 3/32 x 5/8" cotter PIN (2)
11A	278 755 R1	SHIELD, dash heat
12	275 199 R1	SHAFT, governor control hand lever 1/2NF jam NUT 1/2" lock WASHER
13	275 237 R91	RATCHET, governor control 3/8" NUT 3/8 x 5/8" hex-hd. cap SCREW (4) 3/8" lock WASHER (4)
14	275 197 R1	HUB, governor control hand lever
15	261 650 R1	SPRING, governor control hand lever
16	262 704 R1	PIN, governor control hand lever 3/32 x 5/8" cotter PIN
17	251 846 R1	PAWL, governor control hand lever
18	275 198 R21	LEVER w/PAWL, 251 846 R1 and BALL, 264 097 R2, governor control hand
19	264 097 R2	BALL, governor control hand lever
20	275 195 R11	ROD w/BUTTON, choke control 1/16 x 5/8" cotter PIN
21	275 196 R11	ROD w/BUTTON, carburetor fuel adjustment
22	271 179 R1	SWITCH ASSEMBLY, starting (for components see list of parts under details of "Starting Switch")
23	178 020	PLUG, button (29/32" dia. hole) (for cigarette lighter hole)
24	271 077 R91	LIGHT, dash (for components see list of parts under details of "Dash Light")
25	275 282 R91	SWITCH, lighting (for components see list of parts under details of "Lighting Switch")
26	275 251 R1	PANEL, instrument 1/4" NUT (4) 1/4 x 1/2" slt-rd-hd. mach. SCREW (4) 1/4" lock WASHER (4)
27	269 467 R92	AMMETER
28	62 801 DC	SWITCH, ignition (for components see list of parts under details of "Ignition Switch")
29	258 634 R93	INDICATOR w/CLAMP, 60 085 D, engine oil pressure
30	60 805 D	CLAMP (engine oil pressure indicator) No. 12 Type "B" NUT (2) No. 12 external-tooth lock WASHER (2)
31	29 898 D	NUT, upper engine oil pressure indicator tube coupling (one in engine oil pressure indicator) (2)
32	275 273 R11	TUBE w/two NUTS, 29 898 D, engine oil pressure indicator

-215-

ENGINE CONTROLS, DASH, INSTRUMENTS AND INSTRUMENT PANEL (TD-91)

REF. NO.	PART NUMBER	DESCRIPTION
33	89 863 H	UNION, engine oil pressure tube (upper to lower tube)
34	275 274 R11	TUBE w/two NUTS, 29 898 D, lower engine oil pressure indicator
35	29 898 D	NUT, lower engine oil pressure indicator tube coupling (2)
36	29 901 D	COUPLING, engine oil pressure indicator half-union) (in engine)
37	269 976 R91	INDICATOR, fuel pressure
38	257 523 R1	CONNECTOR, fuel oil pressure indicator tube (in indicator) (TD-91 65425 up)
38	67 869 D	ELBOW, fuel oil pressure indicator tube (in indicator) (TD-91 60301 to 65424)
39	278 756 R1	TUBE, fuel oil pressure indicator (TD-91 65425 up) (together w/two NUT, 29 898 D. CONNECTOR, 257 523 R1 and CONNECTOR, 29 901 D will work for 275 275 R11) (TD-91 60301 to 62998) (together w/two NUT, 29 898 D and CONNECTOR, 257 523 R1 will work for 275 275 R21) (TD-91 62999 to 65424)
39A	272 245 R1	CLIP, fuel oil pressure indicator tube
40	30 402 D	ELBOW, fuel oil pressure indicator tube (in pump) (TD-91 60301 to 62998)
40	29 901 D	CONNECTOR, fuel oil pressure indicator tube (in pump) (TD-91 62999 up)
41	29 898 D	NUT, coupling, fuel oil pressure indicator tube (2)
42	63 782 D	INDICATOR w/BUSHING, 51 510 D and CLAMP, 50 417 D, heat (low boiling point)
42	281 195 R91	INDICATOR w/BUSHING, 51 510 D and CLAMP, 50 417 D, heat
43	50 417 D	CLAMP (heat indicator) No. 12 Type "F" NUT (2) No. 12 external-tooth lock WASHER (2)
44	51 510 D	BUSHING, reducing
	255 876 R91	ATTACHMENT, low boiling point thermostat and heat indicator (consists of THERMOSTAT, 261 590 R92 and INDICATOR, 63 782 D) (also listed in "Fan, Thermostat and Water Pump") (See NOTE)
	264 309 R91	CLIP, engine oil pressure indicator lower tube No. 10 NUT No. 10 x 3/4" slt-rd-hd. mach. SCREW No. 10 lock WASHER
	271 226 R91	COUPLING, carburetor fuel adjustment rod 1/16 x 5/8" cotter PIN (2)
	2 750 005 R1	DECAL, shifting diagram
	144 034	REDUCER, 3/4 x 1/2" pipe (iron) (in cylinder head) (used with heat INDICATOR, 281 195 R91)
	45 248 D	SPACER, dash (2)
	275 216 R1	SPRING, compression release rod No. 10 NUT (2) No. 10 x 3/8" slt-rd-hd. mach. SCREW (2) No. 10 light lock WASHER (2)
	275 249 R11	SUPPORT, instrument panel 3/8" NUT 3/8 x 1/2" hex-hd. cap SCREW (2) 3/8" lock WASHER (2)

NOTE - Factory Application - Order on Machine Order Form.
Field Application - Order through Regular Service Parts Channels.

REF. NO.	PART NUMBER	DESCRIPTION

CRANKCASE GUARD AND FRONT PULL HOOK
(T-61, TD-61 and TD-91)

-216-

MISCELLANEOUS EQUIPMENT

REF. NO.	PART NUMBER	DESCRIPTION

CRANKCASE GUARD AND FRONT PULL HOOK
(T-61, TD-61 and TD-91) - Continued

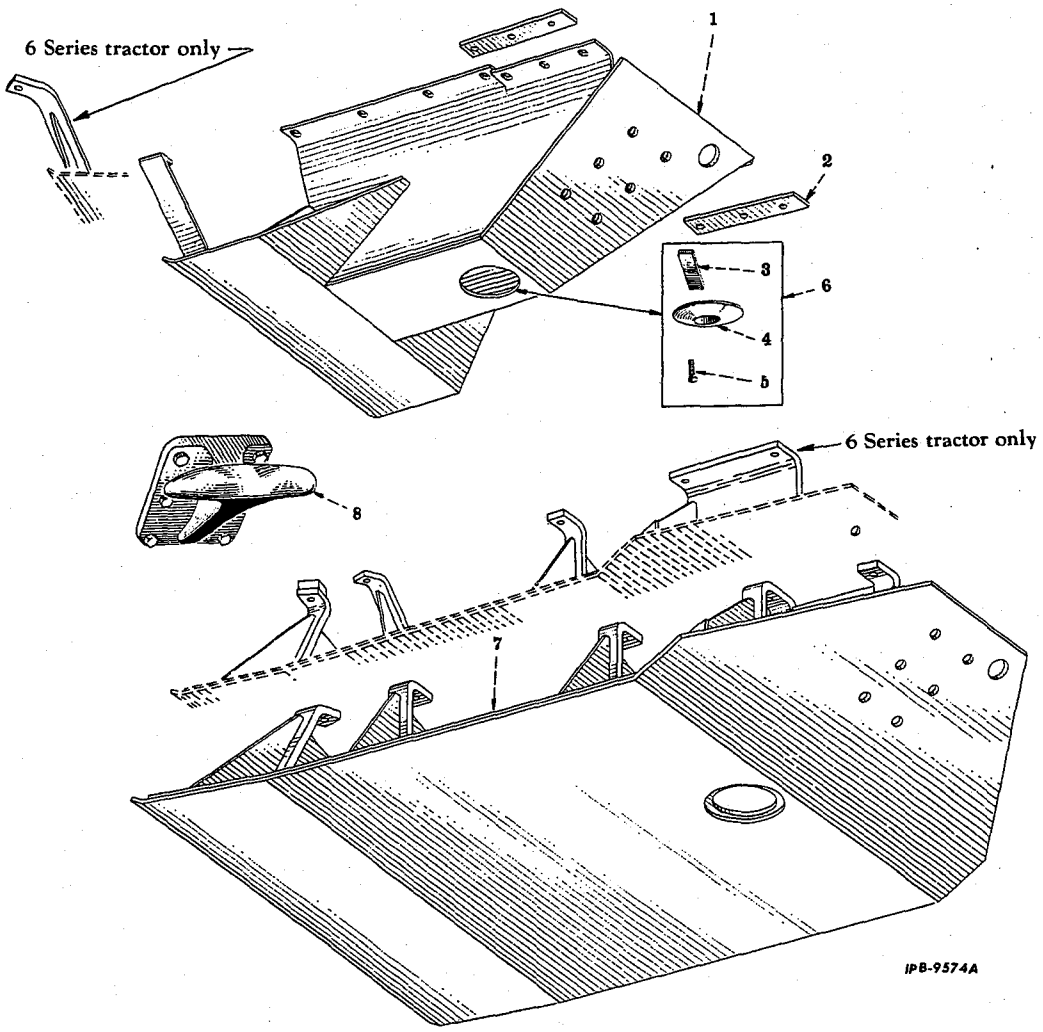

Illustrations are of typical parts only, which may vary in detail

Ⓧ - KEY TO UNITS

A -	52 312 DB	ATTACHMENT, crankcase guard (T-61 and TD-61)
B -	275 348 R91	ATTACHMENT, crankcase guard (open logging type wide tread only) (T-61 and TD-61)
C -	5 961 DX	ATTACHMENT, front pull hook (for tractors equipped with crankcase guard attachments)
D -	279 096 R91	ATTACHMENT, crankcase guard (for equipment combination only) (T-6-425-1 and TD-6-424-1)
E -	54 038 DA	ATTACHMENT, crankcase guard (TD-91)
F -	275 679 R91	ATTACHMENT, crankcase guard (open logging type) (for wide tread only) (not used on Drott loader or inside arm dozer) (TD-91)

Factory Application - Order on Machine Order Form.
Field Application - Order through Regular Service Parts Channels.

Ⓧ Letters of these units correspond with those shown following the description of the parts in the list below and identifies the unit for which the part is used. Items without letters after the description indicates the part is used for all units.

1	54 037 DA	GUARD, crankcase (Unit E) 5/8" NUT (16) 5/8 x 1-1/4" hex-hd. cap SCREW (8) 5/8 x 1-3/4" hex-hd. cap SCREW (8)
1	52 306 DB	GUARD, crankcase (Unit A and D) 5/8 x 1-1/4" hex-hd. cap SCREW (8 for Unit A) 5/8 x 1-3/4" hex-hd. cap SCREW (6 for Unit A) 5/8 x 2-1/2" hex-hd. cap SCREW (8 for Unit D) 5/8 x 2" hex-hd. cap SCREW (6 for Unit D) 5/8" NUT (14 for Unit A and D)

PRINTED IN UNITED STATES OF AMERICA

REF. NO.	PART NUMBER	DESCRIPTION
		CRANKCASE GUARD AND FRONT PULL HOOK (T-61, TD-61 and TD-91) - Continued
2	47 336 DB	SPACER, crankcase guard (*) (6 for Unit A and B)
2	48 764 DA	SPACER, crankcase guard (*) (4 for Unit E and F)
3	42 877 DB	SUPPORT, oil drain hole cover (Unit A, B, D, E and F)
4	5 977 DA	COVER, oil drain hole (order 67 574 DC) (Unit A, B, D, E and F)
5		SCREW, 1/2 x 1-1/4" hex-hd. cap (oil drain hole cover) (Unit A, B, D, E and F)
6	67 574 DC	COVER w/SUPPORT, 42 877 DB and cap SCREW, 179 883, oil drain hole (Unit A, B, D, E and F)
7	275 530 R11	GUARD, crankcase (Unit B) 5/8" NUT (8) 5/8 x 2-1/4" hex-hd. cap SCREW (4) 5/8 x 1-3/4" hex-hd. cap SCREW (4) 5/8 x 2-3/4" hex-hd. cap SCREW (2)
7	275 664 R11	GUARD, crankcase (Unit F) 5/8" NUT (16 for Unit E) (8 for Unit F) 5/8 x 1-3/4" hex-hd. cap SCREW (8) 5/8 x 2-1/2" hex-hd. cap SCREW (2)
8	5 961 DX	HOOK, front pull (Unit C) 5/8NF NUT (6) 5/8NF x 2" hex-hd. cap SCREW (6) 5/8" lock WASHER (6)
	9 322 D	COVER, crankcase guard water trap opening (Unit A and D) 1/2 x 1-1/4" hex-hd. cap SCREW (2) 1/2" lock WASHER (2)
	282 569 R11	EXTENSION w/NUT, crankcase guard rear support (2 for Unit B and F)
	276 740 R1	SPACER, crankcase guard front (+) (2 for Unit B)
	276 742 R1	SPACER, crankcase guard rear (+) (6 for Unit B) 5/8 x 2-1/2" hex-hd. cap SCREW (4) 5/8 x 3" hex-hd. cap SCREW (4) 5/8 x 3-1/2" hex-hd. cap SCREW (2)
	276 740 R1	SPACER, crankcase guard (2 for Unit A)
	276 741 R1	SPACER, crankcase guard (2 for Unit A)
	276 742 R1	SPACER, crankcase guard (2 for Unit A) 5/8 x 2" hex-hd. cap SCREW (6) 5/8 x 2-1/2" hex-hd. cap SCREW (8)
	279 072 R1	SPACER, crankcase guard front (2 for Unit D)
	279 073 R1	SPACER, crankcase guard center (2 for Unit D)
	279 074 R1	SPACER, crankcase guard rear (2 for Unit D)

(+) - Not used in conjunction with heavy duty equalizer attachment

(*) - Not required when attachments are used with Radiator Guard and Front Bumper Attachment.

-217-

MISCELLANEOUS EQUIPMENT

PRINTED IN UNITED STATES OF AMERICA

REF. NO.	PART NUMBER	DESCRIPTION

RADIATOR SHUTTER AND CONTROLS
(Hardy Mfg. Co.) (T-61, TD-61 and TD-91)

-218-

MISCELLANEOUS EQUIPMENT

REF. NO.	PART NUMBER	DESCRIPTION

RADIATOR SHUTTER AND CONTROLS
(Hardy Mfg. Co.) (T-61, TD-61 and TD-91) - Continued

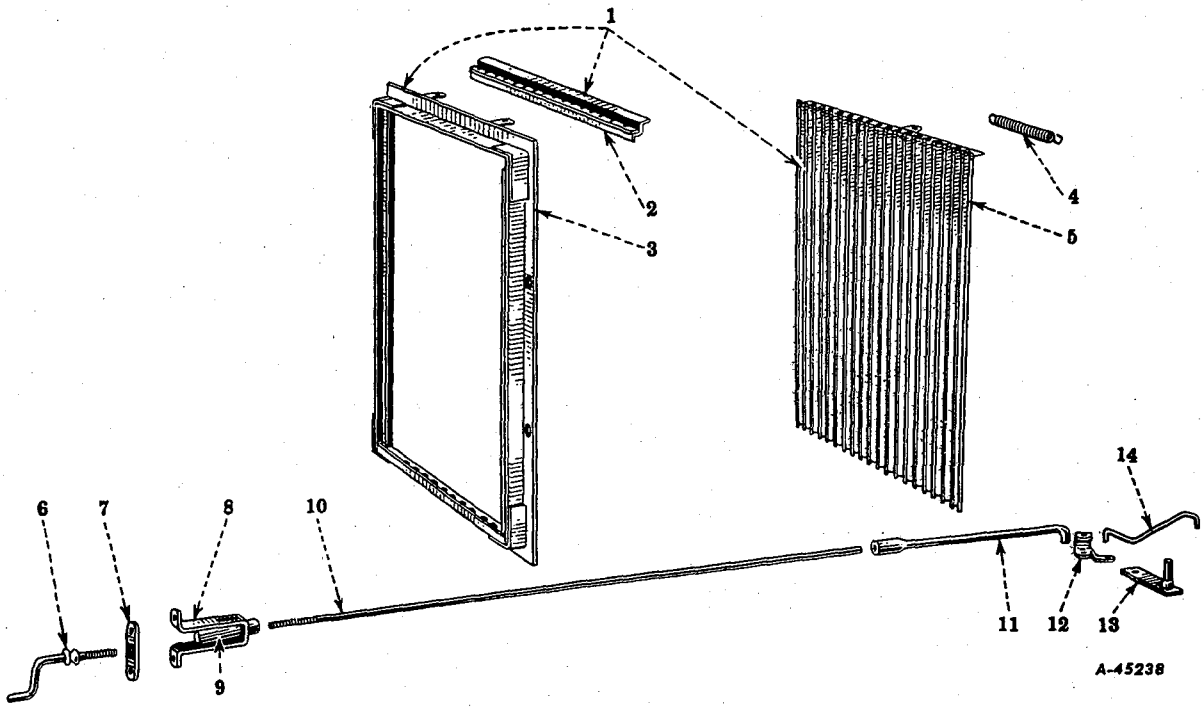

⊗ KEY TO UNITS

A - 275 390 R91 ATTACHMENT, radiator shutter (T-61 and TD-61) (See NOTE)

B - 275 290 R91 ATTACHMENT, radiator shutter (TD-91) (See NOTE)

⊗ Letters of these units correspond with those shown following the description of the parts in the list below and identifies the unit for which the part is used. Items without letters after the description indicates the part is used for all units.

1	275 391 R91	SHUTTER ASSEMBLY, radiator (24550) (Unit A) (Composed of - 1 CARRIER 56 132 D 1 FRAME 276 243 R91 1 SHUTTER 276 242 R91 1 SPRING 47 530 D) 5/16 x 5/8" hex-hd. cap SCREW (8) 5/16" lock WASHER (8) 11/32 x 3/4" x 16 ga. WASHER (4)
1	275 291 R91	SHUTTER ASSEMBLY, radiator (24555) (Unit B) (Composed of - 1 CARRIER 56 127 D 1 FRAME w/BAR 276 596 R91 1 SHUTTER w/BAR 276 597 R91 1 SPRING 47 530 D) 5/16 x 5/8" hex-hd. cap SCREW (8) 5/16" lock WASHER (8) 11/32 x 3/4" x No. 16 ga. WASHER (4)
2	56 127 D	CARRIER, bearing (Unit B) (16948) No. 10NF NUT (5) No. 10NF x 3/8" slt-rd-hd. mach. SCREW (5) No. 10 lock WASHER (5)
2	56 132 D	CARRIER, bearing (16923) (Unit A)
3	276 243 R91	FRAME w/bearing BAR (24346) (Unit A)
3	276 596 R91	FRAME w/bearing BAR (Unit B)
4	47 530 D	SPRING, bellcrank and operating link (155949)
5	276 242 R91	SHUTTER w/operating BAR (24334) (Unit A)
5	276 597 R91	SHUTTER w/operating BAR (24554) (Unit B)
6	274 608 R11	CRANK w/HANDLE, radiator shutter control
7	50 763 DA	SPACER, radiator shutter control crank
8	50 761 DA	BRACKET, radiator shutter control crank
	14 993 R1	CARRIAGE BOLT, 1/4 x 3/4" (2) 1/4" NUT (2) 1/4" lock WASHER (2)
9	50 762 DA	COLLAR, radiator shutter control crank threaded
10	51 744 D	ROD, radiator shutter control rear (Unit A)
10	53 939 D	ROD, radiator shutter control rear (Unit B) 3/8" NUT
11	50 765 DX	ROD w/COUPLING, radiator shutter control front 1/8 x 3/4" cotter PIN 1/8 x 1" cotter PIN
12	51 745 D	BELLCRANK, radiator shutter
13	47 310 DX	SUPPORT, radiator shutter bellcrank 1/8 x 3/4" cotter PIN
14	47 309 D	ROD, radiator shutter operating 3/32 x 3/4" cotter PIN

NOTE - Factory Application - Order on Machine Order Form.
Field Application - Order through Regular Service Parts Channels.

PRINTED IN UNITED STATES OF AMERICA

OUTBOARD FAN ATTACHMENT

	IH Part Number	Description
		Parts without letters after the description indicates the part is used for all attachments listed below: Letters "A" and "B" are used to identify separate attachments.
A	307 442 R91	ATTACHMENT, outboard fan (for TD-9 (91 Series) equipped with radiator guards only) (not used on machines equipped with radiator shutter)
B	307 481 R91	ATTACHMENT, outboard fan (for T-6 and TD-6 (61 Series) equipped with radiator guards only) (not used on machines equipped with radiator shutter)
	307 443 R1	ADAPTER, fan shaft
	IZG-3661	DIAGRAM, radiator core modification (Attachment A)
	IZG-3676	DIAGRAM, radiator core modification (Attachment B)
	307 446 R1	HUB, fan
	103 646	KEY, fan hub (1/8 x 3/4" Woodruff)
	18 453 R1	NUT, fan hub
	20 289 D	OIL SEAL, fan shaft adapter
	309 039 R1	"O" RING, fan shaft adapter
	318 718 R1	SHAFT, fan 5/16 x 5/8" hex-hd cap SCREW (4) 5/16" lock WASHER (4)
	307 447 R1	SHROUD, fan (Attachment A)
	307 482 R1	SHROUD, fan (Attachment B) 5/16 x 5/8" hex-hd cap SCREW (8) 5/16" lock WASHER (8)

-218B-
MEMORANDA

REF. NO.	PART NUMBER	DESCRIPTION

FRONT BUMPER AND RADIATOR GUARD
(T-61, TD-61 and TD-91)

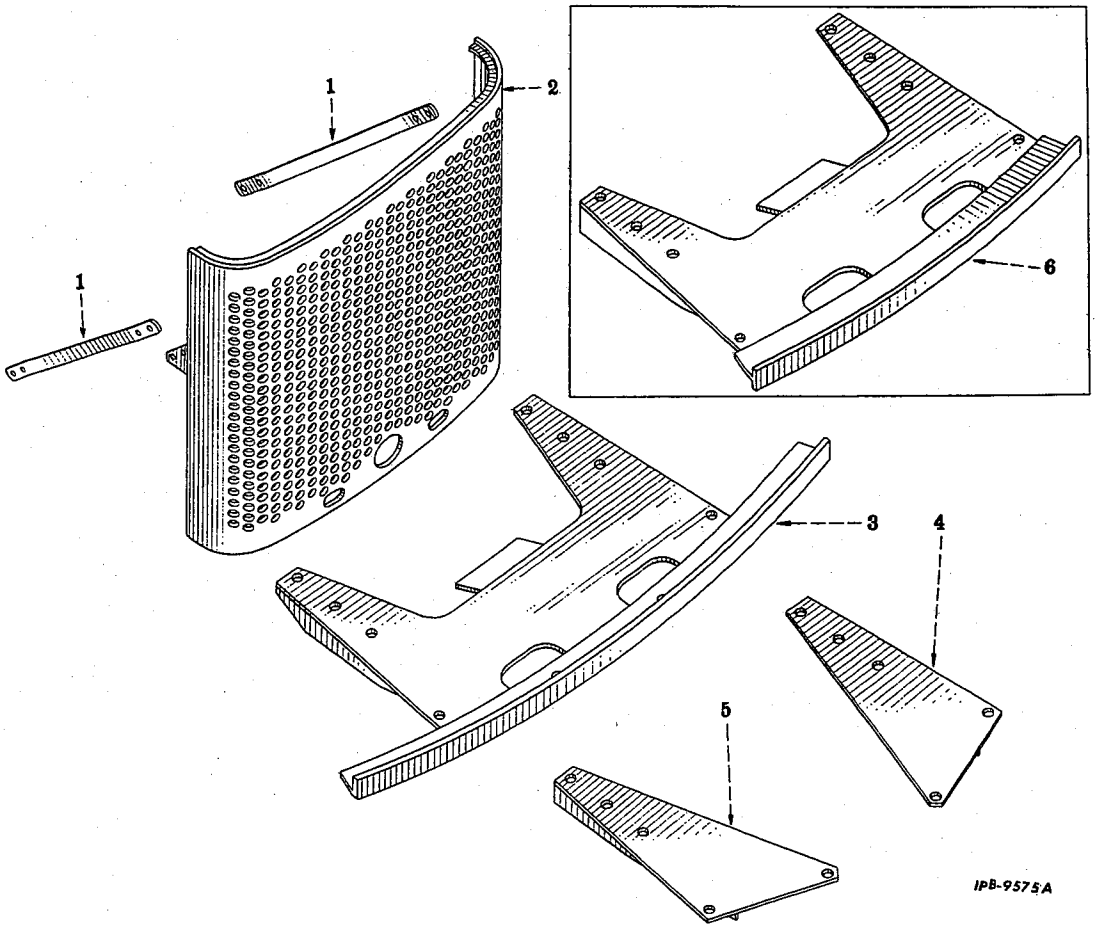

Ⓧ - KEY TO UNITS

A -	53 949 D	ATTACHMENT, front bumper (See NOTE A) (TD-91)(*)
B -	271 585 R91	ATTACHMENT, front bumper (See NOTE B) (TD-91)(*)
C -	275 294 R91	ATTACHMENT, radiator guard (TD-91) (*)
D -	275 735 R91	ATTACHMENT, radiator guard and front bumper (See NOTE A) (TD-91)(*)
E -	275 736 R91	ATTACHMENT, radiator guard and front bumper (See NOTE B) (TD-91)(*)
F -	52 304 DA	ATTACHMENT, front bumper (T-61 and TD-61)(*)
G -	275 786 R91	ATTACHMENT, radiator guard (T-61 and TD-61)(*)
H -	275 788 R91	ATTACHMENT, guard, radiator, w/front BUMPER (T-61 and TD-91)(*)

Ⓧ Letters of these units correspond with those shown following the description of the parts in the list below and identifies the unit for which the part is used. Items without letters after the description indicates the part is used for all units.

1	48 739 DX	BRACE, radiator guard (2 for Unit C, D and E) 1/2NF NUT (8) 1/2NF x 1-1/2" hex-hd. cap SCREW (4) 1/2NF x 1-3/4" hex-hd. cap SCREW (4) 1/2" lock WASHER (8)

REF. NO.	PART NUMBER	DESCRIPTION

FRONT BUMPER AND RADIATOR GUARD
(T-61, TD-61 and TD-91) - Continued

1	47 322 DX	BRACE w/SPACER, radiator guard (2 for Unit G and H) 7/16NF NUT (8) 7/16NF x 1-1/4" hex-hd. cap SCREW (4) 7/16NF x 1-3/4" hex-hd. cap SCREW (4) 7/16" lock WASHER (8)
2	275 787 R11	GUARD, radiator (Unit G and H) 1/2NF NUT (4) 1/2NF x 2" hex-hd. cap SCREW (4 for Unit G) 1/2" lock WASHER (4) 1/2NF x 2-1/4" hex-hd. cap SCREW (4 for Unit H)

(*) - Factory Application - Order on Machine Order Form.
Field Application - Order through Regular Service Parts Channels.

NOTE A - For tractors equipped with four Roller Track Frame.

NOTE B - For tractors equipped with five Roller Track Frame.

MISCELLANEOUS EQUIPMENT

REF. NO.	PART NUMBER	DESCRIPTION
		FRONT BUMPER AND RADIATOR GUARD (T-61, TD-61 and TD-91) - Continued
2	275 295 R11	GUARD, radiator (Unit C, D and E) 1/2NF NUT (4) 1/2NF x 2" hex-hd. cap SCREW (4 for Unit C) 1/2NF x 2-1/2" hex-hd. cap SCREW (4 for Unit D and E) 1/2" lock WASHER (4)
3	53 952 DA	BUMPER, front (Unit A and D) 5/8NF NUT (6) 5/8NF x 1-1/2" hex-hd. cap SCREW (6)
3	52 303 DB	BUMPER, front (Unit F and H) 5/8" NUT (6) 5/8 x 1-1/4" hex-hd. cap SCREW (2 for Unit F) 5/8 x 1-1/2" hex-hd. cap SCREW (6) 1/2" lock WASHER (2 for Unit F)
	Q 1 521	WASHER, 17/32 x 1-1/4" x 14 ga. (2 for Unit F)

BELT PULLEY
(T-61, TD-61 and TD-91)

-220-

MISCELLANEOUS EQUIPMENT

REF. NO.	PART NUMBER	DESCRIPTION
		FRONT BUMPER AND RADIATOR GUARD (T-61, TD-61 and TD-91) - Continued
4	53 942 D	BRACKET, radiator guard support LH (Unit C) 5/8NF NUT (3) 5/8NF x 1-1/4" hex-hd. cap SCREW (3)
4	49 702 DA	BRACKET, radiator guard support LH (Unit G) 5/8" NUT (3) 5/8 x 1-1/4" hex-hd. cap SCREW (3)
5	53 943 D	BRACKET, radiator guard support RH (Unit C) 5/8NF NUT (3) 5/8NF x 1-1/4" hex-hd. cap SCREW (3)
5	49 703 DA	BRACKET, radiator guard support RH (Unit G) 5/8" NUT (3) 5/8 x 1-1/4" hex-hd. cap SCREW (3)
6	271 581 R91	BUMPER, front (Unit B and E) 5/8NF x 1-1/2" hex-hd. cap SCREW (6) 5/8NF NUT (6)

BELT PULLEY
(T-61, TD-61 and TD-91) - Continued

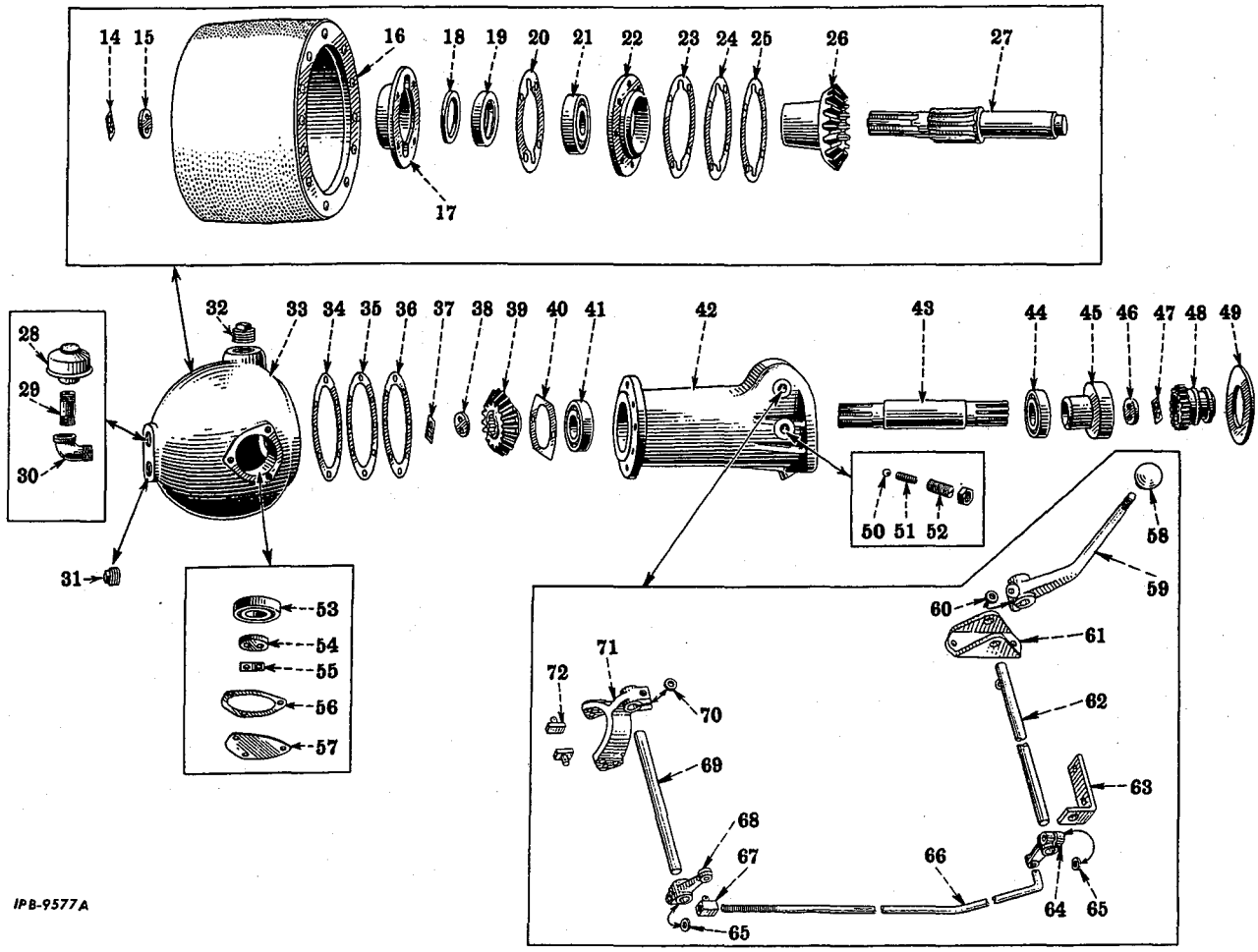

PRINTED IN UNITED STATES OF AMERICA

MISCELLANEOUS EQUIPMENT

REF. NO.	PART NUMBER	DESCRIPTION

BELT PULLEY
(T-61, TD-61 and TD-91) - Continued

(X) - KEY TO UNITS

A -	275 397 R91	ATTACHMENT, belt pulley and power take-off (for tractors not equipped with rear power take-off ATTACHMENT, 53 259 DA) (T-61 and TD-61) (See NOTE 1 and 2)
B -	275 767 R91	ATTACHMENT, belt pulley and power take-off (for tractors not equipped with rear power take-off ATTACHMENT, 53 962 DA) (TD-91) (See NOTE 1 and 2)
C -	275 398 R91	ATTACHMENT, belt pulley (less power take-off shaft) (for tractors equipped with rear power take-off ATTACHMENT, 53 259 DA) (T-61 and TD-61) (See NOTE 2)
D -	275 768 R91	ATTACHMENT, belt pulley (less power take-off shaft) (for tractors equipped with rear power take-off ATTACHMENT, 53 962 DA) (TD-91) (See NOTE 2)

(X) Letters of these units correspond with those shown following the description of the parts in the list below and identifies the unit for which the part is used. Items without letters after the description indicates the part is used for all units.

2 to 13		Power Take-Off Illustrated on Page 222 are part of ATTACHMENT, 275 397 R91 (Unit A)
2 to 13		Power Take-Off Illustrated on Page 222 are part of ATTACHMENT, 275 767 R91 (Unit B)
14	45 558 DA	LOCK, belt pulley retaining washer bolt
15	49 178 DA	WASHER, belt pulley retaining 3/8 x 1" hex-hd. cap SCREW (2)
16	264 370 R91	PULLEY, belt (11" dia. x 8-1/2" face)
16	264 371 R91	PULLEY, belt (12-1/2" dia. x 8-1/2" face)
17	6 679 D	RETAINER, belt pulley oil seal 3/8 x 1-3/8" hex-hd. cap SCREW (4) 3/8" lock WASHER (4)
18	48 524 D	WASHER, belt pulley oil seal felt
19	53 970 D	OIL SEAL, belt pulley
20	48 526 D	GASKET, belt pulley oil seal retainer
21	ST 206	BEARING, belt pulley
22	6 682 D	CAGE, belt pulley bearing
23	48 521 D	SHIM, belt pulley bearing cage (heavy) (X)
24	48 522 D	SHIM, belt pulley bearing cage (medium) (X)
25	48 523 D	SHIM, belt pulley bearing cage (light) (X)
26	53 251 D	GEAR, belt pulley (17 T)
27	53 252 D	SHAFT, belt pulley
28	268 500 R91	BREATHER, belt pulley gear box
29	190 570	PIPE, belt pulley gear box breather
30	108 687	ELBOW, 1" x 90° belt pulley gear box breather pipe
31		Follows Reference No. 33
32		Follows Reference No. 33
33	6 846 DX	BOX, gear, belt pulley,
	144 000	PLUG, 1" sq-socket pipe
	144 002	PLUG, 1-1/2" sq-socket pipe (2)
34	49 542 D	SHIM, belt pulley carrier (heavy)
35	49 543 D	SHIM, belt pulley carrier (medium)
36	49 544 D	SHIM, belt pulley carrier (light)
37	45 558 DA	LOCK, belt pulley pinion retaining washer bolt
38	49 178 DA	WASHER, belt pulley pinion retaining 3/8NF x 1" hex-hd. cap SCREW (2)

-221-

MISCELLANEOUS EQUIPMENT

REF. NO.	PART NUMBER	DESCRIPTION

BELT PULLEY
(T-61, TD-61 and TD-91) - Continued

39	53 256 D	PINION, belt pulley (16 T)
40	49 546 D	RETAINER, belt pulley pinion shaft rear bearing 3/8 x 3/4" hex-hd. cap SCREW (2) 3/8" lock WASHER (2)
41	ST 206	BEARING, rear belt pulley pinion shaft
42	8 390 DB	CARRIER, belt pulley 3/4" NUT 7/16 x 1-1/2" hex-hd. cap SCREW (8) 5/8 x 2-1/4" hex-hd. cap SCREW (4) 3/4 x 1-3/4" hex-hd. cap SCREW 7/16" lock WASHER (8)
43	53 255 D	SHAFT, belt pulley pinion
44	ST 215	BEARING, front belt pulley pinion shaft
45	53 253 D	COUPLING, belt pulley (16 T) 3/8NF x 1" hex-hd. cap SCREW (2)
46	49 178 DA	WASHER, belt pulley coupling retaining
47	45 558 DA	LOCK, belt pulley coupling retaining washer bolt
48	53 258 D	COUPLING, belt pulley shifter (16 T)
49	57 255 D	BAFFLE, power shaft bearing cage
50	13 722 D	POPPET, belt pulley shifter (optional with D 2 616)
50	D 2 616	POPPET, belt pulley shifter (optional with 13 722 D)
51	64 163 D	SPRING, belt pulley shifter poppet
52	49 105 D	BUSHING, belt pulley shifter poppet 3/4" jam NUT
53	ST 205 A	BEARING, belt pulley gear
54	49 178 DA	WASHER, belt pulley gear bearing retaining 3/8NF x 1" hex-hd. cap SCREW
55	45 558 DA	LOCK, belt pulley gear bearing retaining washer bolt
56	49 538 D	GASKET, belt pulley gear bearing cover
57	59 545 D	COVER, belt pulley gear bearing 3/8 x 3/4" hex-hd. cap SCREW (3) 3/8" lock WASHER (3)
58	264 097 R2	BALL, belt pulley shifter hand lever
59	275 777 R11	LEVER w/BALL, 265 097 R2, belt pulley shifter hand 3/8 x 1-1/4" hex-hd. cap SCREW 3/8" lock WASHER
60	45 532 DA	KEY, belt pulley shifter hand lever
61	275 775 R1	BRACKET, belt pulley shifter hand lever 3/8NF NUT (2) 3/8NF x 1-1/8" hex-hd. cap SCREW (2) 3/8" lock WASHER (2)
62	275 778 R1	SHAFT, belt pulley shifter hand lever
63	275 776 R1	BRACKET, belt pulley shifter hand lever shaft 3/8NF NUT (2) 3/8NF x 3/4" hex-hd. cap SCREW (2) 3/8" lock WASHER (2)

X - As Required
NOTE 1 - Factory Application - Order on Machine Order Form.
NOTE 2 - Field Application - Order through Regular Service Parts Channels.

PRINTED IN UNITED STATES OF AMERICA

MISCELLANEOUS EQUIPMENT

REF. NO.	PART NUMBER	DESCRIPTION
		BELT PULLEY (T-61, TD-61 and TD-91) - Continued
64	8 807 DA	LEVER, short belt pulley shifter 3/8 x 1-1/4" hex-hd. cap SCREW 3/8" lock WASHER
65	45 532 DA	KEY, belt pulley shifter lever (2)
66	275 779 R1	ROD, belt pulley shifter lever (Unit A and C)
66	275 765 R1	ROD, belt pulley shifter lever (Unit B and D) 3/8NF NUT (2) 1/8 x 3/4" cotter PIN
67	48 906 D	BLOCK, belt pulley shifter lever rod adjusting 3/32 x 5/8" cotter PIN
68	8 807 DA	LEVER, belt pulley shifter (short) (Unit A and C)
68	275 764 R1	LEVER, belt pulley shifter (long) (Unit B and D) 3/8 x 1-1/4" hex-hd. cap SCREW 3/8" lock WASHER

-222-

MISCELLANEOUS EQUIPMENT

REF. NO.	PART NUMBER	DESCRIPTION
		BELT PULLEY (T-61. TD-61 and TD-91) - Continued
69	275 399 R1	SHAFT, belt pulley shifter
70	45 532 DA	KEY, belt pulley shifter fork
71	8 393 DA	FORK, belt pulley shifter 3/8NF x 1-1/4" hex-hd. cap SCREW 3/8" lock WASHER
72	49 541 DA	PIN, belt pulley shifter (2)
	271 409	FITTING, power shaft bearing lubrication (optional with 138 322 H) (in carrier)
	138 322 H	FITTING, power shaft bearing lubrication (optional with 271 409) (in carrier)
	49 547 DA	GASKET, belt pulley carrier
	258 574 R91	PINION, 53 256 D, w/GEAR, 53 251 D, belt pulley drive (matched set)
	63 416 D	SCREW, belt pulley shifter fork stop 3/8" lock WASHER

REAR POWER TAKE-OFF
(T-61, TD-61 and TD-91)

REAR POWER TAKE-OFF
(T-61, TD-61 and TD-91) - Continued

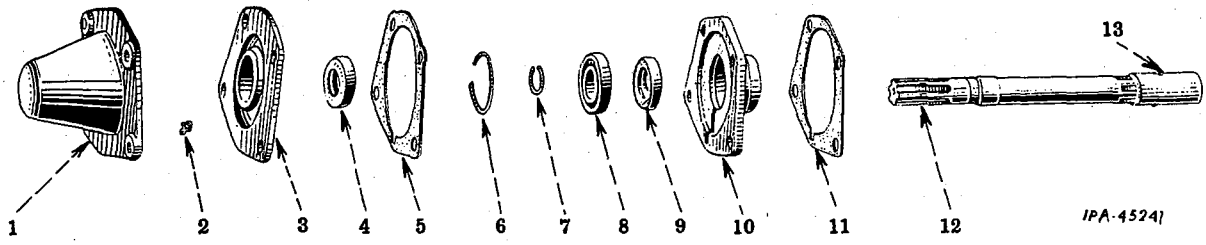

⊗ - KEY TO UNITS

A -	53 259 DA	ATTACHMENT, power take-off rear (T-61 and TD-61) (See NOTE)
B -	53 962 DA	ATTACHMENT, power take-off rear (TD-91) (See NOTE)

⊗ Letters of these units correspond with those shown following the description of the parts in the list below and identifies the unit for which the part is used. Items without letters after the description indicates the part is used for all units.

1	6 843 D	COVER, power take-off shaft end (not belt pulley) 5/8 x 2-1/4" hex-hd. cap SCREW (4)
2	271 409	FITTING, power take-off shaft bearing lubrication (Lincoln 105000) (optional with 138 322 H)
2	138 322 H	FITTING, power take-off shaft bearing lubrication (Alemite 1610B) (optional with 271 409)
3	8 391 D	CAGE, power take-off shaft bearing oil seal
4	53 967 D	OIL SEAL, outer power take-off shaft bearing
5	49 547 DA	GASKET, power take-off shaft bearing cage
6	48 514 D	RING, outer power take-off shaft bearing retaining snap
7	48 512 D	RING, inner power take-off shaft bearing retaining snap
8	ST 205 A	BEARING, ball, power take-off shaft
9	53 968 D	OIL SEAL, inner power take-off shaft
10	8 392 DA	CAGE, power take-off shaft bearing
11	49 547 DA	GASKET, power shaft bearing oil seal cage
12	53 257 DAX	SHAFT w/COUPLING, 20 117 DA, power take-off (Unit A)
12	53 966 DAX	SHAFT w/COUPLING, 49 548 D, power take-off (Unit B)
13	20 117 DA	COUPLING, power take-off shaft (Unit A) 1/4 x 2-1/2" rd-hd. steel RIVET
13	49 548 D	COUPLING, power take-off shaft (Unit B) 5/16 x 2-5/8" rd-hd. steel RIVET

NOTE - Factory Application - Order on Machine Order Form.
Field Application - Order through Regular Service Parts Channels.

PRINTED IN UNITED STATES OF AMERICA

MISCELLANEOUS EQUIPMENT

REF. NO.	PART NUMBER	DESCRIPTION

FRONT POWER TAKE—OFF COUPLING
(T-61, TD-61 and TD-91)

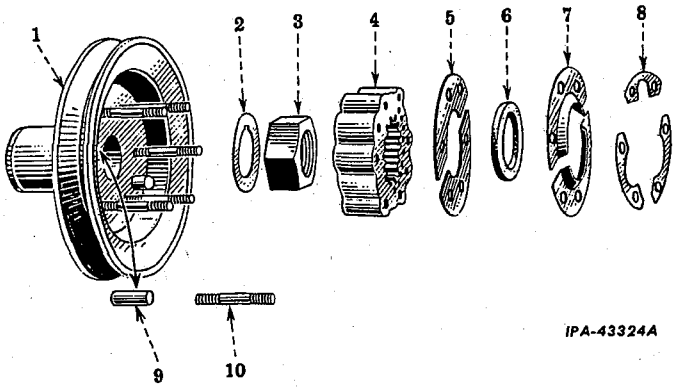

ⓧ KEY TO UNITS

A -	53 826 DA	ATTACHMENT, front power take-off coupling (TD-61 and TD-91) (See NOTE)
B -	53 816 DB	ATTACHMENT, front power take-off coupling (T-61) (See NOTE)

ⓧ Letters of these units correspond with those shown following the description of the parts in the list below and identifies the unit for which the part is used. Items without letters after the description indicates the part is used for all units.

1	6 565 DB	PULLEY, front power take-off fan drive (Unit A)
1	8 506 DA	PULLEY, front power take-off fan drive (Unit B)
2	18 767 D	LOCK, front power take-off fan drive pulley nut
3	53 814 D	NUT, front power take-off fan drive pulley (Unit B)
4	8 505 D	COUPLING, front power take-off (14 T)
5	51 268 D	RETAINER, front power take-off shaft (2)
6	51 269 D	WASHER, front power take-off shaft felt
7	51 271 D	RETAINER, front power take-off shaft felt washer (2)
8	47 244 D	LOCK, front power take-off coupling stud nut (3)
9	269 292 R1	PIN, front power take-off drive (2)
10	57 714 D	STUD, front power take-off coupling (6) 3/8" NUT (6)
		SCREW, 7/16 x 1-3/8" hex-hd. cap (for gear shifter housing) (2 for Unit B)
		WASHER, 7/16" lock (for gear shifter housing) (2 for Unit B)

MISCELLANEOUS EQUIPMENT

REF. NO.	PART NUMBER	DESCRIPTION

STARTING CRANK
(T-61, TD-61 and TD-91)

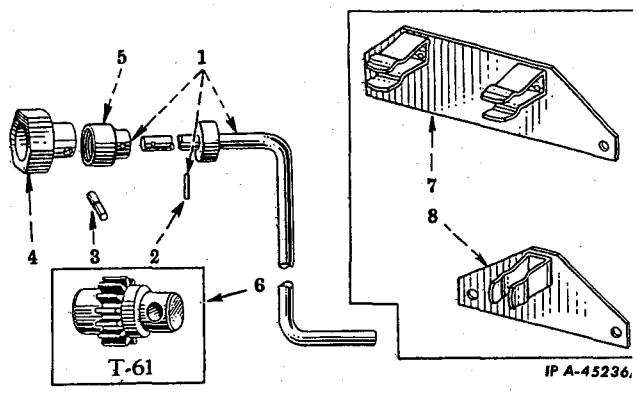

ⓧ - KEY TO UNITS

A -	275 913 R91	ATTACHMENT, starting crank (T-61) (not used on T-61 tractors equipped with front power take-off coupling ATTACHMENT, 53 816 DB) (See NOTE)
B -	275 942 R91	ATTACHMENT, starting crank and adapte: (used on T-61 tractors equipped with front power take-off coupling ATTACHME 53 816 DB) (See NOTE)
C -	276 409 R91	ATTACHMENT, starting crank (TD-61 and TD-91) (See NOTE)

ⓧ Letters of these units correspond with those shown following tl description of the parts in the list below and identifies the uni for which the part is used. Items without letters after the description indicates the part is used for all units.

1	55 911 DAX	CRANK w/RATCHET, 6 935 D and PIN, G 3 754, starting
2	G 3 754	PIN, starting crank ratchet
3	455 238 R1	PIN, crankshaft starting crank (Unit C)
4	276 150 R1	NUT, cranking (Unit C)
5	6 935 D	RATCHET, starting crank
6	56 698 D	ADAPTER, front power take-off starting crank (Unit B)
7	275 915 R11	BRACKET, upper starting crank mounting 3/16 x 3/8" rd-hd. RIVET (iron) (4)
8	275 914 R11	BRACKET, lower starting crank mounting 3/16 x 3/8" rd-hd. RIVET (iron) (2)

NOTE - Factory Application - Order on Machine Order Form.
Field Application - Order through Regular Service Parts Channels.

MISCELLANEOUS EQUIPMENT

REF. NO.	PART NUMBER	DESCRIPTION

REAR REDUCED POWER TAKE-OFF
(T-61, TD-61 and TD-91)

-224-

MISCELLANEOUS EQUIPMENT

REF. NO. | PART NUMBER | DESCRIPTION

REAR REDUCED POWER TAKE-OFF
(T-61, TD-61 and TD-91) - Continued

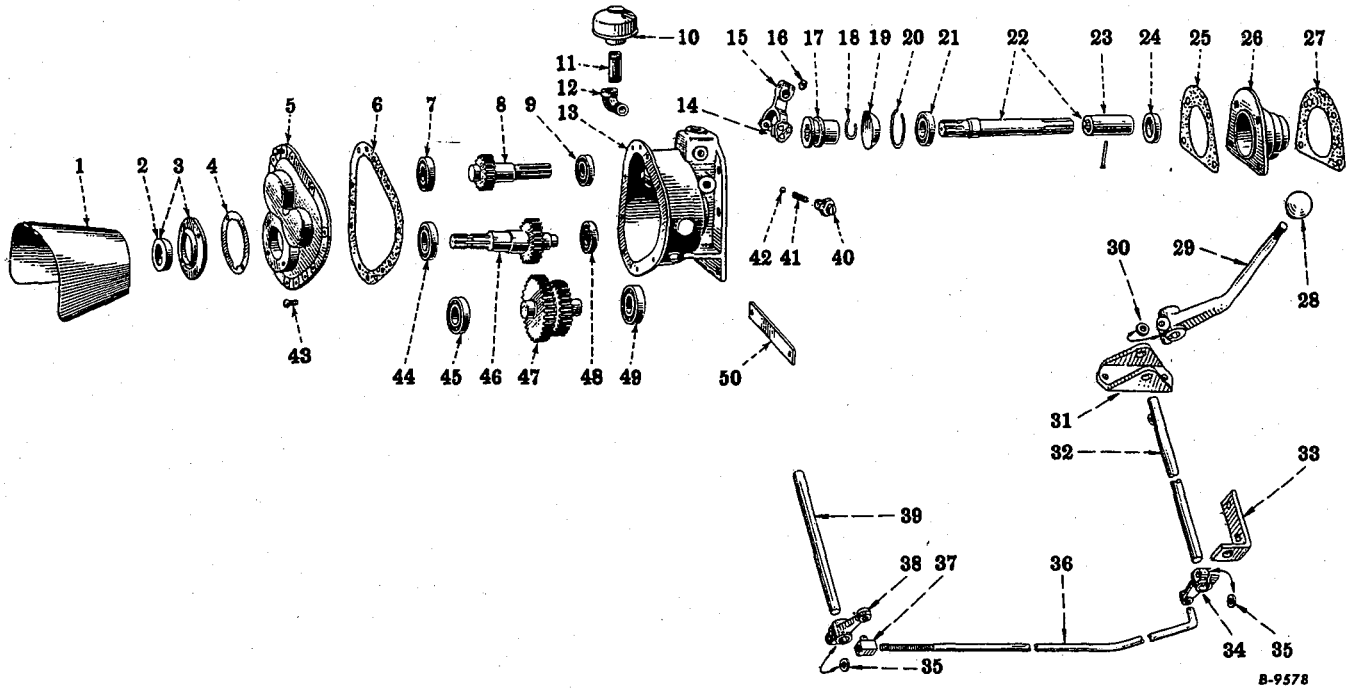

Ⓧ - KEY TO UNITS

A - 275 783 R91 ATTACHMENT, reduced speed rear power take-off (T-61 and TD-61)

B - 275 763 R91 ATTACHMENT, reduced speed rear power take-off (TD-91)

Ⓧ Letters of these units correspond with those shown following the description of the parts in the list below and identifies the unit for which the part is used. Items without letters after the description indicates the part is used for all units.

1	58 064 DXA	SHIELD, power take-off safety 5/16 x 1" hex-hd. cap SCREW (4) 5/16" lock WASHER (4)
2	58 065 D	OIL SEAL, power take-off gear and shaft
3	8 810 DX	RETAINER w/OIL SEAL, 58 065 D, power take-off gear and shaft oil seal
4	58 080 D	GASKET, power take-off gear and shaft oil seal retainer
5	8 812 D	COVER, power take-off housing 3/8NF NUT (9) 3/8NF x 1-1/4" hex-hd. cap SCREW (9) 3/8" lock WASHER (9)
6	58 081 D	GASKET, power take-off housing cover
7	ST 214	BEARING, rear power take-off pinion
8	58 086 DB	PINION, power take-off (18 T)
9	ST 205 A	BEARING, front power take-off pinion
10	268 500 R91	BREATHER
11	190 570	PIPE, breather, power take-off
12	108 687	ELBOW, breather pipe
13	8 811 DX	HOUSING w/two PLUGS, 103 869 and PLUG, 103 870, power take-off 3/4" NUT 5/8 x 1-1/2" hex-hd. cap SCREW 5/8 x 1-3/4" hex-hd. cap SCREW (5 for Unit A) 5/8 x 2" hex-hd. cap SCREW (5 for Unit B) 3/4" sq-hd. pipe PLUG (2) 1" sq-hd. pipe PLUG
14	49 541 DA	PIN, power take-off shifter (2)
15	8 809 DA	FORK, power take-off shifter 3/8NF x 1-1/4" hex-hd. cap SCREW 3/8" lock WASHER
16	45 532 DA	KEY, power take-off shifter fork
17	58 073 DB	COUPLING, power take-off shifter
18	48 512 D	RING, power take-off bearing retaining outer snap
19	58 069 D	SLINGER, oil, power take-off shaft
20	48 514 D	RING, power take-off shaft bearing retaining inner snap
21	ST 204 A	BEARING, power take-off shaft
22	58 074 DBX	SHAFT w/COUPLING, 20 117 DA, power take-off (Unit A)
22	58 090 DBX	SHAFT w/COUPLING, 49 548 D, power take-off (Unit B)

Factory Application - Order on Machine Order Form.
Field Application - Order through Regular Service Parts Channels.

PRINTED IN UNITED STATES OF AMERICA

REF. NO.	PART NUMBER	DESCRIPTION

REAR REDUCED SPEED POWER TAKE-OFF
(T-61, TD-61 and TD-91) - Continued

23	20 117 DA	COUPLING, power take-off shaft (Unit A) 1/4 x 2-1/2" rd-hd. RIVET (steel)
23	49 548 D	COUPLING, power take-off shaft (Unit B) 5/16 x 2-5/8" b-hd. RIVET
24	53 968 D	OIL SEAL, power take-off shaft bearing
25	58 068 D	GASKET, power take-off housing
26	8 808 DX	CAGE w/OIL SEAL, 53 968 D, power take-off shaft bearing
27	58 068 D	GASKET, power take-off shaft bearing cage
28	264 097 R2	BALL, power take-off shifter hand lever
29	275 777 R11	LEVER w/BALL, 264 907 R2, power take-off shifter hand 3/8 x 1-1/4" hex-hd. cap SCREW 3/8" lock WASHER
30	45 532 DA	KEY, power take-off shifter hand lever
31	275 775 R1	BRACKET, power take-off shifter hand lever 3/8NF NUT (2) 3/8 x 1-1/8" hex-hd. cap SCREW (2) 3/8" lock WASHER (2)
32	275 778 R1	SHAFT, power take-off hand lever
33	275 776 R1	BRACKET, power take-off shifter hand lever shaft 3/8NF NUT (2) 3/8 x 3/4" hex-hd. cap SCREW (2) 3/8" lock WASHER (2)
34	8 807 DA	LEVER, power take-off shifter (short) 3/8 x 1-1/4" hex-hd. cap SCREW (Unit B) 3/8 x 1-3/8" hex-hd. cap SCREW (Unit A) 3/8" lock WASHER
35	45 532 DA	KEY, power take-off shifter lever (2)
36	275 765 R1	ROD, power take-off shifter lever (Unit B)
36	275 779 R1	ROD, power take-off shifter lever (Unit A) 3/8NF NUT (2) 1/8 x 3/4" cotter PIN

CHEVRON PRESSURE PRIMER DIESEL STARTING
(TD-61 and TD-91)

-225-

MISCELLANEOUS EQUIPMENT

REF. NO.	PART NUMBER	DESCRIPTION

REAR REDUCED SPEED POWER TAKE-OFF
(T-61, TD-61 and TD-91) - Continued

37	48 906 D	BLOCK, power take-off shifter lever rod adjusting 3/32 x 5/8" cotter PIN
38	275 764 R1	LEVER, power take-off shifter (long) (Unit B 3/8 x 1-1/4" hex-hd. cap SCREW 3/8" lock WASHER
38	8 807 DA	LEVER, power take-off shifter (Unit A) 3/8 x 1-3/8" hex-hd. cap SCREW 3/8" lock WASHER
39	276 981 R1	SHAFT, power take-off shifter
40	49 105 D	BUSHING, power take-off shifter poppet 3/4" jam NUT
41	64 163 D	SPRING, power take-off shifter poppet
42	D 2 616	POPPET, power take-off shifter (optional with 13 722 D)
42	13 722 D	POPPET, power take-off shifter (optional with D 2 616)
43	45 442 D	PIN, power take-off housing cover dowel (2)
44	ST 202	BEARING, rear power take-off gear and shaft
45	ST 205 A	BEARING, rear power take-off idler gear
46	58 085 DA	GEAR and SHAFT, power take-off (23 T) (Unit A)
46	58 087 DB	GEAR and SHAFT, power take-off (24 T) (Unit B)
47	58 084 D	GEAR, power take-off idler (23 and 30 T) (Unit B)
47	58 083 D	GEAR, power take-off idler (24 and 30 T) (Unit A)
48	ST 241	BEARING, front power take-off gear and shaf
49	ST 200	BEARING, front power take-off idler gear
50	58 072 D	SPACER, power take-off housing
	256 051 R11	EXTENSION w/SPACER, drawbar (Unit B)
	256 048 R11	EXTENSION w/SPACERS, drawbar (Unit A)

CHEVRON PRESSURE PRIMER DIESEL STARTING
(TD-61 and TD-91) - Continued

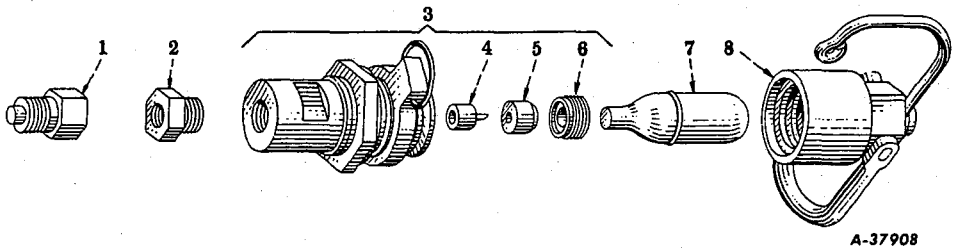

	269 630 R91	ATTACHMENT, diesel starting chevron pressure primer (Field Application - Order through Regular Service Parts Channels.)
1	269 635 R91	NOZZLE, discharge
2	269 634 R91	SCREEN, discharge
3	269 633 R91	BODY w/PIN, 269 525 R1, SCREW, 269 524 R1 and WASHER, 269 523 R1, discharge
4	269 525 R1	PIN, piercing
5	269 523 R1	WASHER, bulb neck
6	269 524 R1	SCREW, bulb neck
7	269 636 R91	BULB, pressure primer (not part of 269 630 R91)(X)
8	269 632 R91	CAP, discharge

X - As Required

PRINTED IN UNITED STATES OF AMERICA

MISCELLANEOUS EQUIPMENT

REF. NO.	PART NUMBER	DESCRIPTION

TOOLS
(T-61, TD-61 and TD-91)

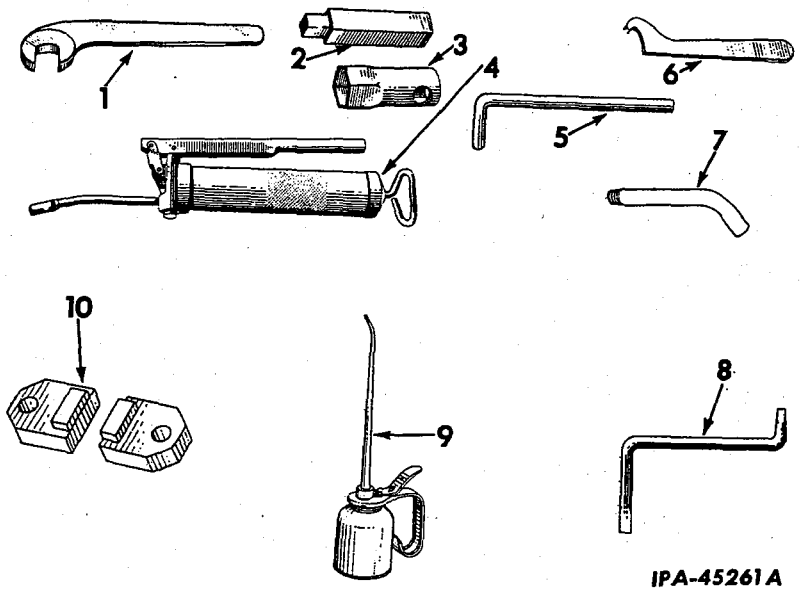

IPA-45261A

⊗ - KEY TO UNITS
A - Service Parts for Tools (T-61 and TD-61)
B - Service Parts for Tools (TD-91)

⊗ Letters of these units correspond with those shown following the description of the parts in the list below and identifies the unit for which the part is used. Items without letters after the description indicates the part is used for all units.

1	9 532 DB	WRENCH, front idler adjuster (Unit A)
1	9 533 DA	WRENCH, front idler adjuster (Unit B)
2	68 415 D	WRENCH, socket head plug (1/2 x 3/4") (TD-61 38951 to 40235) (TD-91 60301 to 64962)
3	46 190 DC	WRENCH, spark plug
4	999 677 R91	LUBRICATOR, hand (15 oz. size) (for components see list of parts under details of "Hand Lubricator") (will work for 264 289 R91)
5	57 052 D	HANDLE, spark plug wrench
6	11 858 DA	WRENCH, water pump
7	51 658 D	EXTENSION, sprocket drive oil filler (Unit A)
8	283 161 R1	WRENCH, socket plug (TD-61 40236 to 41355 and TD-91 64963 to 66992)
8	304 910 R1	WRENCH, socket plug (TD-61 41356 up and TD-91 66993 up)
9	271 406 R91	CAN, oil
10	275 141 R11	ANGLE w/BLOCK, steering clutch compressor (2 for Unit B) 7/16 x 2" hex-hd. cap SCREW (2)
	304 909 R91	NOZZLE, track roller lubricator (used only with track rollers 304 900 R91, 304 901 R91, 304 911 R91 and 304 912 R91) (TD-61 41356 up and TD-91 66993 up)

-226-

MISCELLANEOUS EQUIPMENT

REF. NO.	PART NUMBER	DESCRIPTION

TOOLS
(T-61, TD-61 and TD-91) - continued

263 286 R92 TOOL SET (T-61 and TD-61)
(Composed of -

1	CAN	271 406 R91
1	HANDLE	57 052 D
1	LUBRICATOR	999 677 R91
1	EXTENSION	51 658 D
1	WRENCH	9 532 DB
1	WRENCH	11 858 DA
1	WRENCH	46 190 DC
1	WRENCH	283 161 R1)

263 289 R92 TOOL SET (TD-91)
(Composed of -

1	CAN	271 406 R91
1	HANDLE	57 052 D
1	LUBRICATOR	999 677 R91
2	SCREW	179 866
2	ANGLE	275 141 R11
1	WRENCH	9 533 DA
1	WRENCH	11 858 DA
1	WRENCH	46 190 DC
1	WRENCH	283 161 R1)

PRINTED IN UNITED STATES OF AMERICA

MISCELLANEOUS EQUIPMENT

REF. NO.	MFR'S. NUMBER	DESCRIPTION

TOOL SET
(Owatonna Tool Co.) (T-61, TD-61 and TD-91)

-227-

MISCELLANEOUS EQUIPMENT

REF. NO. | MFR'S. NUMBER | DESCRIPTION

TOOL SET
(Owatonna Tool Co.) (T-61, TD-61 and TD-91) - Continued

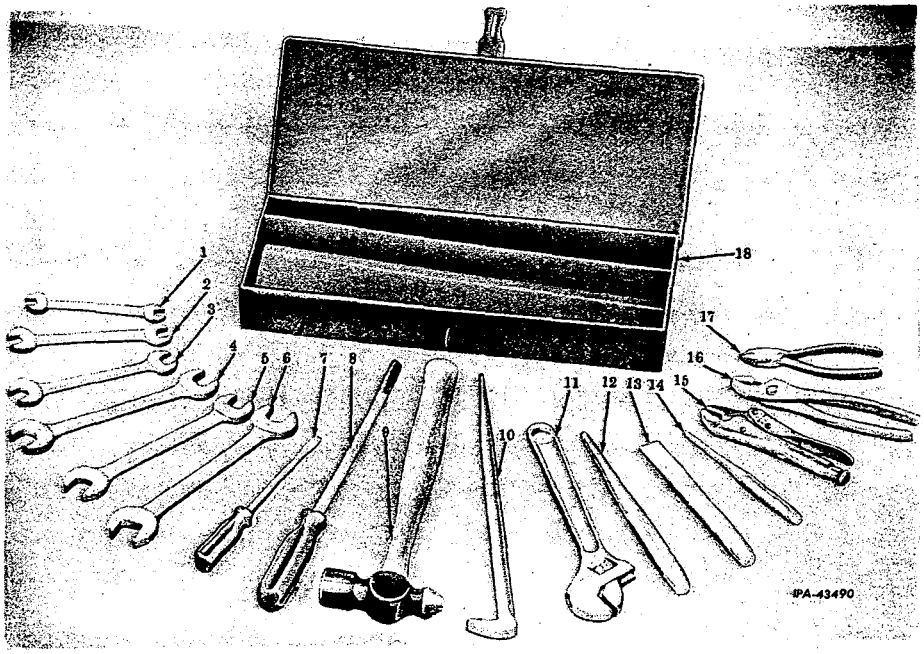

		TOOL SET (consists of seventeen tools and tool box) (also see "Tools" listed in Miscellaneous Equipment Section of catalog) (See NOTE) (I.H. Part Number 276 820 R91)
1	E-1416	WRENCH, end (7/16 x 1/2")
2	E-1820	WRENCH, end (9/16 x 5/8")
3	E-2022	WRENCH, end (5/8 x 11/16")
4	E-2426	WRENCH, end (3/4 x 13/16")
5	E-2628	WRENCH, end (13/16 x 7/8")
6	E-3032	WRENCH, end (15/16 x 1")
7	SS-83	SCREWDRIVER (1/4" shank)
8	SS-123	SCREWDRIVER (3/8" shank)
9	BP-32	HAMMER (ball peen)
10	PB-32	BAR, pry (9/16" rd. x 16" long)
11	DA-12	WRENCH (12" adjustable)
12	TP-24	PUNCH (5/16" bit x 10" long)
13	CC-24	CHISEL (7/8" bit x 8" long)
14	PP-6	PUNCH (3/16" bit x 10" long)
15	719	WRENCH, vise grip (7")
16	712-A	PLIER (slip joint, 8")
17	700-B	CUTTER, idagonal (6")
18	H-190	BOX, tool

NOTE - Order individual tools and complete tool sets from Owatonna Tool Co., Owatonna, Minnesota

PRINTED IN UNITED STATES OF AMERICA

MISCELLANEOUS EQUIPMENT

REF. NO.	MFR'S. NUMBER	DESCRIPTION

TOOL SET
(Owatonna Tool Co.) (T-61, TD-61 and TD-91)

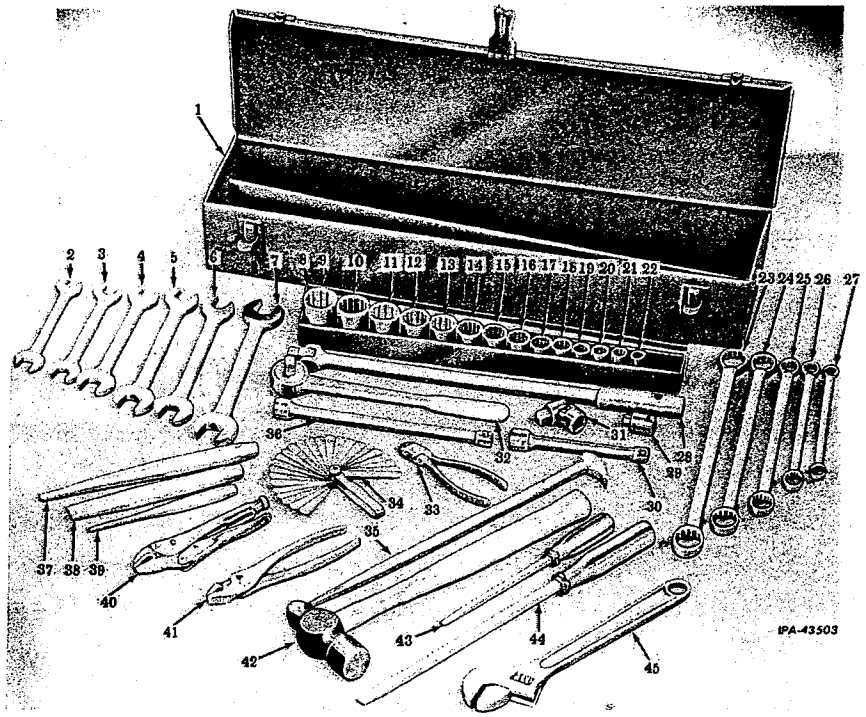

		TOOL SET (consists of forty-three tools and tool box) (also see "Tools listed in Miscellaneous Equipment Section of catalog) (I.H. Part Number 276 821 R91) (See NOTE)
1	H-391	BOX, tool
2	E-1416	WRENCH, end (7/16 x 1/2")
3	E-1820	WRENCH, end (9/16 x 5/8")
4	E-2022	WRENCH, end (5/8 x 11/16")
5	E-2426	WRENCH, end (3/4 x 13/16")
6	E-2628	WRENCH, end (13/16 x 7/8")
7	E-3032	WRENCH, end (15/16 x 1")
8	195	TRAY
9	140	SOCKET (1-1/4")
10	138	SOCKET (1-3/16")
11	136	SOCKET (1-1/8")
12	134	SOCKET (1-1/16")
13	132	SOCKET (1")
14	130	SOCKET (15/16")
15	128	SOCKET (7/8")
16	126	SOCKET (13/16")
17	124	SOCKET (3/4")
18	122	SOCKET (11/16")
19	120	SOCKET (5/8")
20	118	SOCKET (9/16")
21	116	SOCKET (1/2")
22	114	SOCKET (7/16")
23	B-3032	WRENCH, box (15/16 x 1")
24	B-2628	WRENCH, box (13/16 x 3/4")
25	B-2024	WRENCH, box (5/8 x 3/4")
26	B-1820	WRENCH, box (9/16 x 5/8")
27	B-1416	WRENCH, box (7/16 x 1/2")

-228-

MISCELLANEOUS EQUIPMENT

REF. NO.	MFR'S. NUMBER	DESCRIPTION

TOOL SET
(Owatonna Tool Co.) (T-61, TD-61 and TD-91) - Continued

28	H-177	HANDLE, flex
29	D-1612	ADAPTER (1/2" female, 3/8" male)
30	H-172	EXTENSION (6")
31	H-189	JOINT, universal
32	H-163	RATCHET (reversible)
33	700-B	CUTTER, diagonal (6")
34	861	GAUGE, feeler (25 blades)
35	PB-43	BAR, pry (9/16" rd. x 16" long)
36	H-173	EXTENSION (10")
37	TP-24	PUNCH (5/16" bit x 10" long)
38	CC-24	CHISEL (7/8" bit x 8" long)
39	PP-6	PUNCH (3/16" bit x 7" long)
40	719	WRENCH, vise grip (7")
41	712-A	PLIER (slip joint, 8")
42	BP-32	HAMMER (ball peen)
43	SS-83	SCREWDRIVER (1/4" shank)
44	SS-123	SCREWDRIVER (3/8" shank)
45	DA-12	WRENCH (12" adjustable)

NOTE - Order individual tools and complete tool sets from Owatonna Tool Co., Owatonna, Minnesota.

MISCELLANEOUS EQUIPMENT

REF. NO.	PART NUMBER	DESCRIPTION

TOOL BOX
(T-61, TD-61 and TD-91)

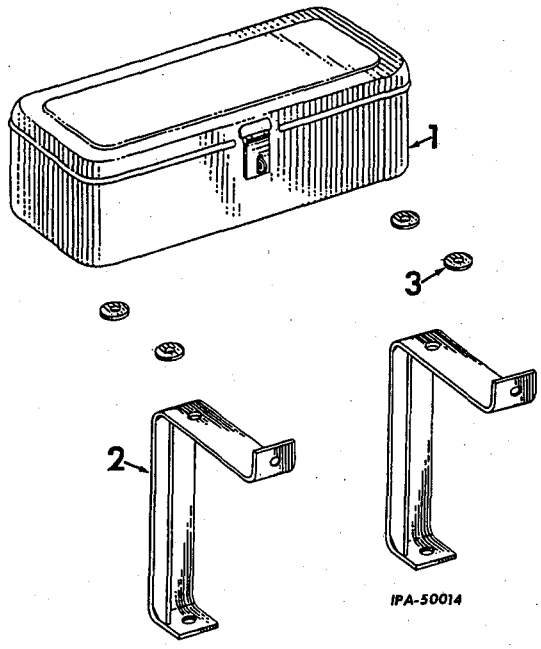

-229-

MISCELLANEOUS EQUIPMENT

REF. NO.	PART NUMBER	DESCRIPTION

TOOL BOX
(T-61, TD-61 and TD-91) - Continued

Ⓧ - KEY TO UNITS

A -	266 473 R91	ATTACHMENT, tool box 21", less lock and keys (not fender mounted) (See NOTE)
B -		SERVICE PARTS for tool box 21" w/LOCK and KEY (fender mounted)

Ⓧ Letters of these units correspond with those shown following the description of the parts in the list below and identifies the unit for which the part is used. Items without letters after the description indicates the part is used for all units.

1	280 655 R91	BOX, tool (21") (Unit A) 3/8" NUT (4) 3/8 x 1-1/4" hex-hd. cap SCREW (4) 3/8" lock WASHER (4)
1	276 132 R91	BOX, tool (21") (Unit B) 3/8" NUT (4) 3/8 x 7/8" hex-hd. cap SCREW (2) 3/8 x 1" hex-hd. cap SCREW (2) 3/8" lock WASHER (4)
2	277 454 R11	BRACKET, tool box mounting (2 for Unit B) 3/8" NUT (2) 3/8 x 1-1/4" hex-hd. cap SCREW (2) 3/8" lock WASHER (2)
3	280 874 R1	SPACER, tool box (4 for Unit A)
	276 678 R91	PADLOCK w/KEY (Unit B)

NOTE - Factory Application - Order on Machine Order Form.
Field Application - Order through Regular Service Parts Channels.

REF. NO.	MFR'S. NUMBER	DESCRIPTION

LUBRICATION GUN-HAND TYPE
(Lincoln Engineering Co.) (T-61, TD-61 and TD-91)

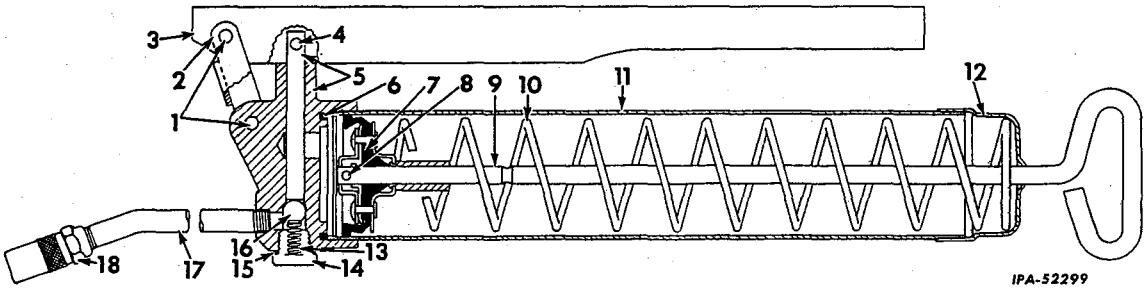

	700 205	GUN ASSEMBLY, hand type lubrication (15 oz. size) (also listed with tools) (International Harvester Parts Number 999 677 R91) (will work for 264 289 R91)
1	12518	PIN, toggle (2)
2	45728	TOGGLE
3	45239	HANDLE, lever
4	12517	PIN, handle
5	91084	HEAD and PLUNGER
6	34080	GASKET, container
7	91581	FOLLOWER

REF. NO.	MFR'S. NUMBER	DESCRIPTION

LUBRICATION GUN-HAND TYPE
(Lincoln Engineering Co.) (T-61, TD-61 and TD-91) - Continued

8	68513	PIN, roll
9	63089	FOLLOWER, rod
10	55264	SPRING, follower
11	61443	TUBE, container
12	45836	CAP, tube
13	55005	SPRING, pump check
14	11230	HOUSING, spring
15	31038	GASKET, copper
16	66007	BALL, 3/8" dia. stl.
17	62028	EXTENSION, nozzle
18	5852	COUPLER, hydraulic

PRINTED IN UNITED STATES OF AMERICA

REF. NO.	PART NUMBER	DESCRIPTION

TANK LUBRICATOR
(Lincoln Engineering Co.) (T-61, TD-61 and TD-91)

-230-

MISCELLANEOUS EQUIPMENT

REF. NO.	PART NUMBER	DESCRIPTION

TANK LUBRICATOR
(Lincoln Engineering Co.) (T-61, TD-61 and TD-91) - Continued

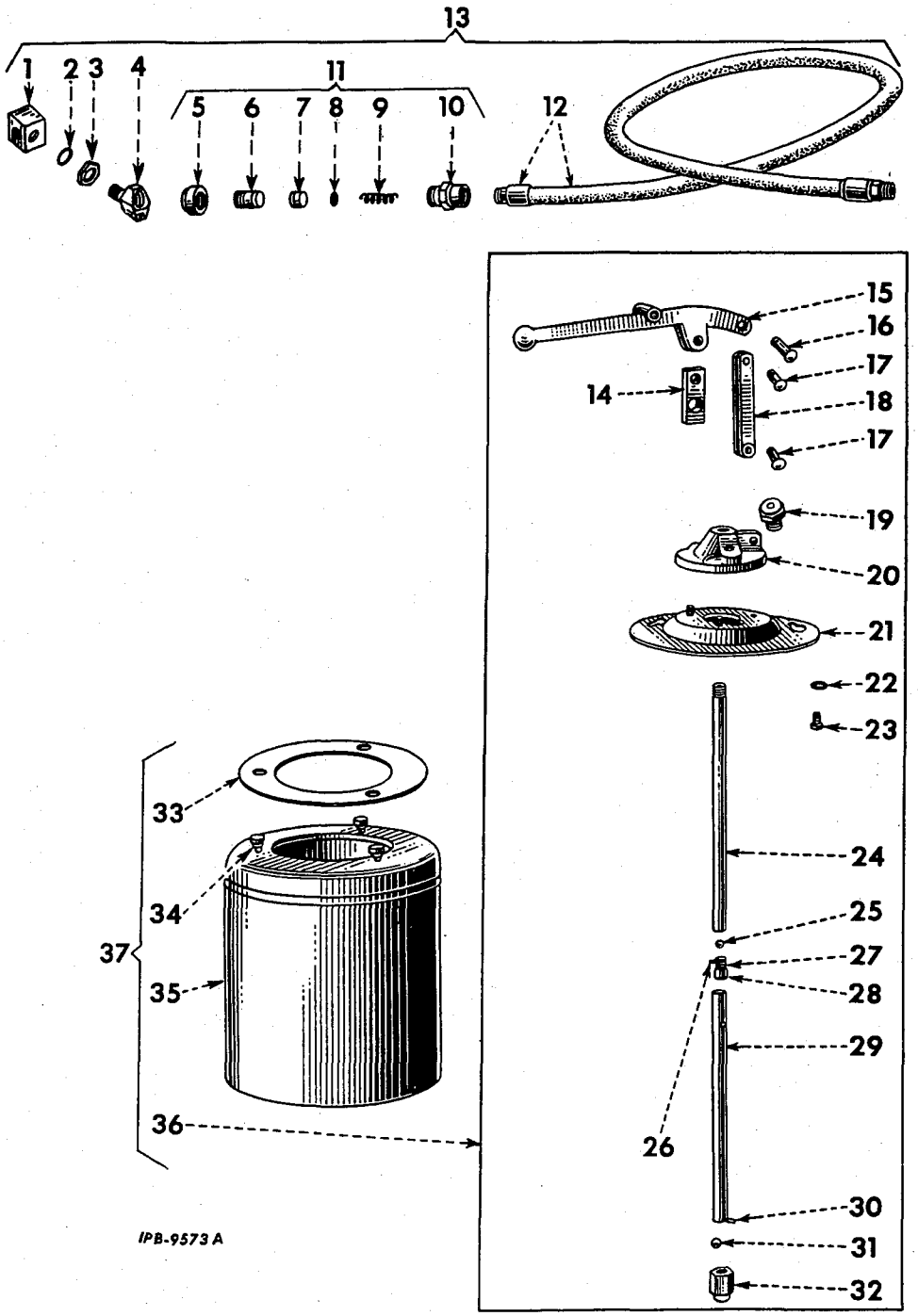

1	276 221 R1	COUPLER, hose (80933)
2	359 158 R1	"O" RING (5/16 x 7/16 x 1/16") (used with 45° angle adapter)
2	40 657 D	GASKET, coupler body plug (used with straight adapter) (31-016)
3	296 769 R1	NUT, lubricator adapter (used with 45° adapter) (13196)

PRINTED IN UNITED STATES OF AMERICA

MISCELLANEOUS EQUIPMENT

REF. NO.	PART NUMBER	DESCRIPTION

TANK LUBRICATOR
(Lincoln Engineering Co.) (T-61, TD-61 and TD-91) - Continued

REF. NO.	PART NUMBER	DESCRIPTION
4	53 187 D	ADAPTER, coupler (straight type adapter) (11-137)
4	296 770 R1	ADAPTER, lubricator (45° angle) (13197)
	40 642 D	COLLAR, bucket lubricator hose swivel (10534)
	40 641 D	STUD, hose swivel (10533)
	40 631 D	LEATHER, hose swivel cup (36019)
	40 703 D	WASHER, hose swivel (48080)
	40 713 D	SPRING, hose coupler swivel (56014)
	40 646 D	BODY, swivel hose (10541)
11	36 947 D	SWIVEL ASSEMBLY, hose (80353) (Composed of - 1 BODY 40 646 D; 1 COLLAR 40 642 D; 1 LEATHER 40 631 D; 1 SPRING 40 713 D; 1 STUD 40 641 D; 1 WASHER 40 703 D)
12	53 207 D	HOSE w/two FITTINGS, tank lubricator (3 ft.) (79036)
13	53 210 DA	HOSE and COUPLER ASSEMBLY (81-243) (Composed of - 1 ADAPTER 296 770 R1; 1 COUPLER 276 221 R1; 1 HOSE 53 207 D; 1 NUT 296 769 R1; 1 "O" RING 359 158 R1; 1 SWIVEL 36 947 D)
14	53 202 D	OUTLET, tank lubricator pump (11-551)
15	55 482 D	HANDLE, tank lubricator pump lever (40214)
16	40 635 D	PIN, tank lubricator pump handle (10326) 3/32 x 1/2" cotter PIN
17	40 638 D	PIN, tank lubricator pump toggle (10472) (2) 3/32 x 1/2" cotter PIN
18	271 153 R1	TOGGLE, tank lubricator pump (45744)
19	37 290 D	FITTING, tank lubricator hose giant button head (5750)
20	62 158 D	CASTING, tank lubricator pump (40228)
21	62 159 D	PLATE, tank lubricator container cover (45-620) 1/4 x 7/16" hex-hd. cap SCREW (3) 1/4" internal-tooth lock WASHER (3)
22		Follows Reference No. 21
23		Follows Reference No. 21
24	53 205 D	ROD, tank lubricator pump piston (62-099)
25	39 659 D	BALL, 7/32" dia. tank lubricator pump check (66-011)
26	53 200 D	PIN, tank lubricator pump piston (11-174)
27	53 198 D	PISTON, tank lubricator pump (11-172)
28	53 203 D	PACKING, tank lubricator pump piston (34-078)
29	53 206 D	TUBE, tank lubricator pump (62-100)
30	53 201 D	PIN, tank lubricator pump foot valve (11-175)
31	H 5 476	BALL, 7/16" dia. tank lubricator pump check (66-030)
32	53 199 D	BODY, tank lubricator pump foot valve (11-173)
33	278 919 R1	GASKET, container cover (38084)
34	55 479 D	SCREW, tank lubricator container cover (11225) (3)
35	53 209 D	CONTAINER w/three SCREWS, 55 479 D, tank lubricator (81-241)

-231-

MISCELLANEOUS EQUIPMENT

TANK LUBRICATOR
(Lincoln Engineering Co.) (T-61, TD-61 and TD-91) - Continued

REF. NO.	PART NUMBER	DESCRIPTION
36	53 208 D	PUMP ASSEMBLY, tank lubricator (81-240) (Composed of - 1 BALL H 5 476; 1 BALL 39 659 D; 1 BODY 53 199 D; 1 CASTING 62 158 D; 1 FITTING 37 290 D; 1 HANDLE 55 482 D; 1 OUTLET 53 202 D; 1 PACKING 53 203 D; 1 PIN 40 635 D; 1 PIN 40 638 D; 1 PIN 53 200 D; 1 PIN 53 201 D; 2 PIN 103 372; 1 PISTON 53 198 D; 1 PLATE 62 159 D; 1 ROD 53 205 D; 1 TOGGLE 52 123 D; 1 TUBE 53 206 D)
37	55 481 D	LUBRICATOR w/CONTAINER, 53 209 D and PUMP, 53 208 D, tank type (1260-IH)
	51 511 DA	LUBRICATOR w/HOSE and COUPLER, 53 210 DA and TANK, 55 481 D, tank type
	304 909 R91	NOZZLE, track roller lubricator (not furnished with tank lubricator) (used only with track ROLLERS, 304 900 R91, 304 901 R91, 304 911 R91 and 304 912 R91) (TD-61 41356 up and TD-91 66993 up)

EXHAUST RAIN CAP
(T-61, TD-61 and TD-91)

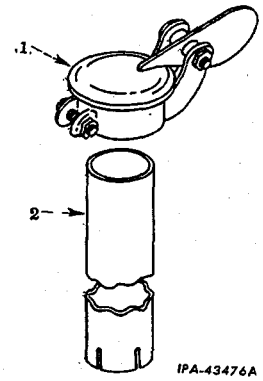

REF. NO.	PART NUMBER	DESCRIPTION
	272 288 R91	ATTACHMENT, exhaust rain cap (TD-61 and TD-91) (See NOTE)
	281 424 R91	ATTACHMENT, exhaust rain cap (T-61) (See NOTE)
1	283 280 R91	CAP, exhaust rain (used with ATTACHMENT 272 288 R91)
1	281 424 R91	CAP, exhaust rain (used with ATTACHMENT 281 424 R91)
2	277 180 R1	PIPE, exhaust muffler extension (used with ATTACHMENT, 272 288 R91)

NOTE - Factory Application - Order on Machine Order Form.
Field Application - Order through Regular Service Parts Channels.

MISCELLANEOUS EQUIPMENT

REF. NO.	PART NUMBER	DESCRIPTION

ELECTRIC HOUR METER ATTACHMENT
(Hobbs) (T-61, TD-61 and TD-91)

-232-

MISCELLANEOUS EQUIPMENT

REF. NO.	PART NUMBER	DESCRIPTION

ELECTRIC HOUR METER ATTACHMENT
(Hobbs) (T-61, TD-61 and TD-91) - Continued

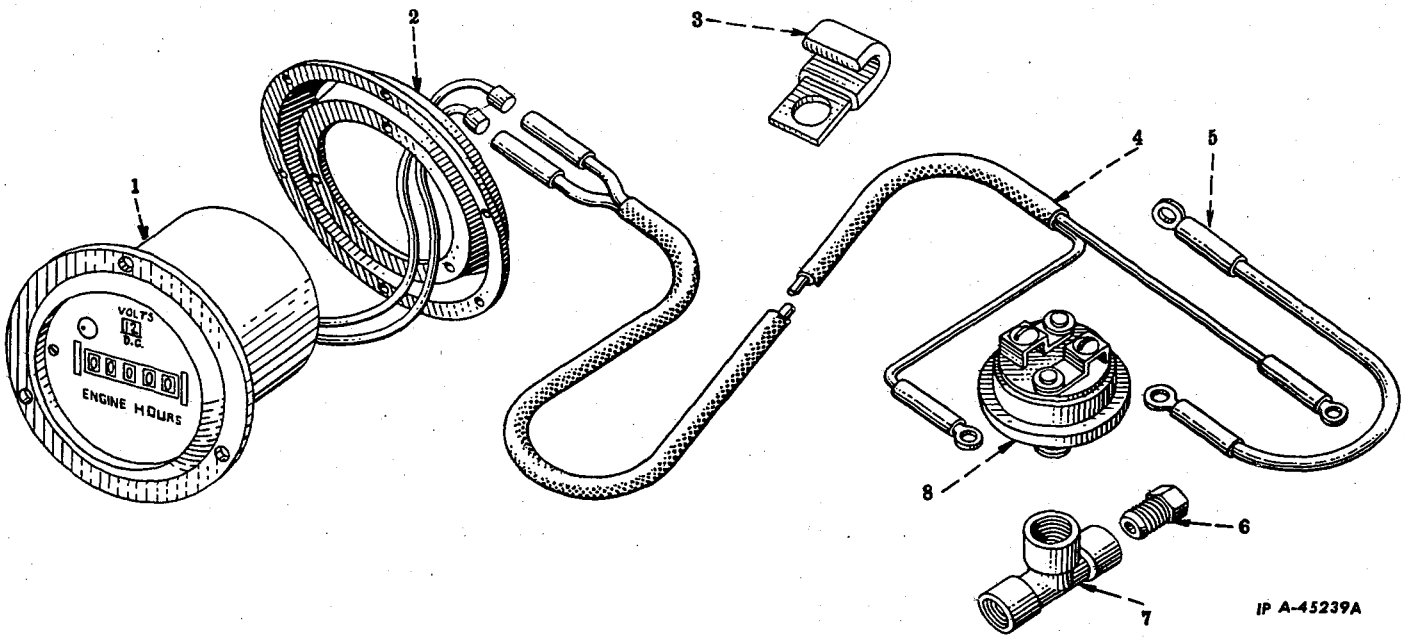

⊗ - KEY TO UNITS

A -	275 791 R91	ATTACHMENT, electric hour meter (6 volt) (T-61) (for tractors equipped with battery ignition or magneto ignition attachment and electric starting and lighting) (See NOTE)
B -	275 792 R91	ATTACHMENT, electric hour meter (12 volt) (TD-61 and TD-91) (for tractors equipped with battery ignition or magneto ignition attachment and electric starting and lighting) (See NOTE)

⊗ Letters of these units correspond with those shown following the description of the parts in the list below and identifies the unit for which the part is used. Items without letters after the description indicates the part is used for all units.

1	261 987 R93	METER, hour (6 volt) (MI-1062) (Unit A)
1	264 673 R93	METER, hour (12 volt) (MI-1064) (Unit B) No. 6 x 1/2" slt-rd-hd. mach. SCREW (3) No. 6 lock WASHER (3)
2	264 674 R91	DAMPER, vibration No. 6 cadmium plated NUT No. 6 x 1/2" slt-rd-hd. mach. SCREW (3) No. 6 lock WASHER (3)
3	263 514 R91	CLIP, hour meter cable harness (mounted on front seat support)
4	275 793 R91	HARNESS, hour meter cable
5	358 585 R91	CABLE, pressure switch to ground
6	29 898 D	NUT, pressure switch "Tee" (2)
7	262 421 R1	FITTING, pressure switch "Tee"
8	267 825 R91	SWITCH, pressure (optional with 277 748 R91)
8	277 748 R91	SWITCH, pressure (optional with 267 825 R91)

NOTE - Factory Application - Order on Machine Order Form.
Field Application - Order through Regular Service Parts Channels.

PRINTED IN UNITED STATES OF AMERICA

MISCELLANEOUS EQUIPMENT

REF. NO.	PART NUMBER	DESCRIPTION

ODOMETER (Stewart-Warner Corporation)
(T-61, TD-61 and TD-91)

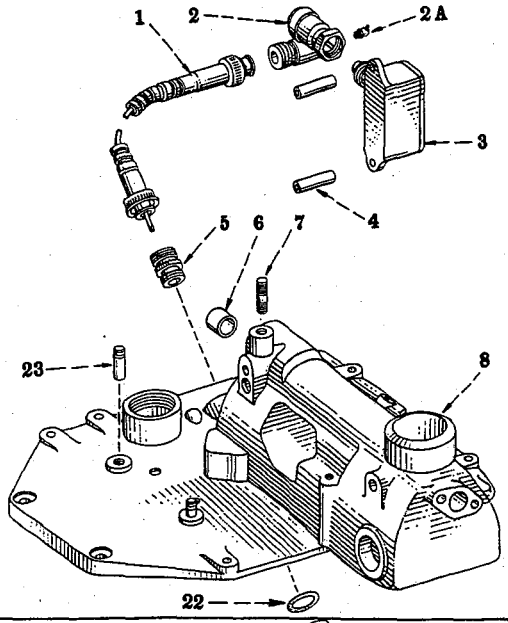

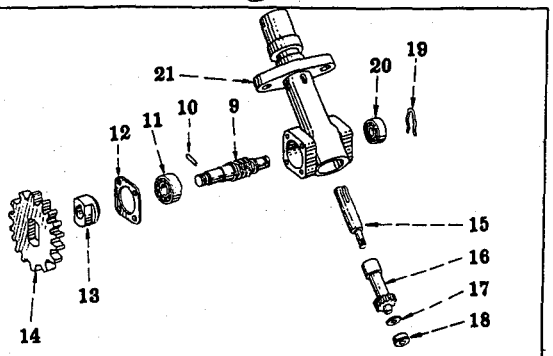

T-61 and TD-61

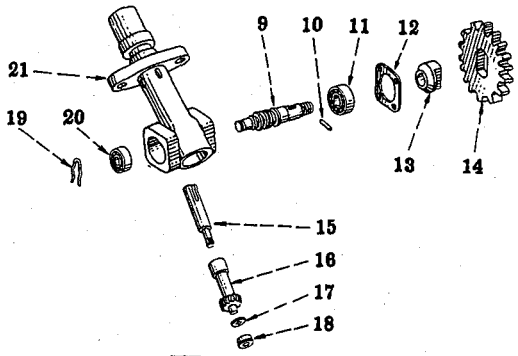

TD-91

IPB-10241

MISCELLANEOUS EQUIPMENT

REF. NO.	PART NUMBER	DESCRIPTION

ODOMETER (Stewart-Warner Corporation)
(T-61, TD-61 and TD-91) - Continued

Ⓧ - KEY TO UNITS

A -	275 943 R91	ATTACHMENT, odometer (T-61 and TD-61)
B -	275 016 R91	ATTACHMENT, odometer (TD-91)

Ⓧ Letters of these units correspond with those shown following the description of the parts in the list below and identifies the unit for which the part is used. Items without letters after the description indicates the part is used for all units.

1	275 923 R91	SHAFT, odometer drive flexible (Unit B)
1	275 945 R91	SHAFT, odometer drive flexible (13600) (Unit A)
2	275 922 R91	JOINT, odometer drive upper angle (667SC)
2A	271 417	FITTING, odometer angle joint lubrication (Lincoln No. 105000) (optional with 271 285)
2A	271 285	FITTING, odometer angle joint lubrication (Alemite No. 1613B) (optional with 271 417)
3	37 599 D	HEAD, odometer (S-776A) 1/4" NUT (2) 1/4 x 2-1/2" hex-hd. cap SCREW (2) 1/4" lock WASHER (2)
4	275 924 R1	SUPPORT, odometer (2)
5	15 913 HA	SLEEVE, odometer drive housing (7844)
6	276 156 R1	BUSHING, shifter lever shaft
7	41 633 D	STUD, platform
8	275 944 R11	HOUSING ASSEMBLY, transmission gear shifter (Unit A) (Composed of - 2 ANCHOR 50 826 D 1 BUSHING 276 156 R1 §1 HOUSING 1 STUD 41 633 D)
	172 529	PLUG, 5/8" expansion (3)
	172 574	PLUG, 1-1/2" expansion (3)
8	275 917 R11	HOUSING ASSEMBLY, transmission on gear shifter (Unit B) (Composed of - 2 ANCHOR 50 826 D 1 BUSHING 276 155 R1 §1 HOUSING 1 STUD 41 633 D)
	172 529	PLUG, 5/8" expansion (4)
	172 574	PLUG, 1-1/2" expansion (3)
9	26 251 D	SHAFT, odometer drive gear (one T)
	251 021 R1	NUT, 3/8NF jam (slotted) 3/32 x 5/8" cotter PIN
	Q 105	WASHER, 25/64 x 7/8" x 16 ga.
10	6 403 T	PIN, odometer drive gear (spiral) bearing
11	ST 260	BEARING, front odometer drive gear shaft ball
12	26 249 D	RETAINER, drive gear shaft front bearing
13	26 248 D	HUB, odometer drive gear
14	59 334 D	GEAR, odometer drive (16 T) (Unit A)
14	59 055 D	GEAR, odometer drive (16 T) (Unit B)
15	275 921 R1	EXTENSION, odometer drive shaft
16	26 257 D	GEAR and SHAFT, RH odometer lower driven (20 T) (96213)

NOTE - Factory Application - Order on Machine Order Form.
Field Application - Order through Regular Service Channels.
§ - Not Furnished Separately

REF. NO.	PART NUMBER	DESCRIPTION
		ODOMETER (Stewart-Warner Corporation) (T-61, TD-61 and TD-91) - Continued
17	26 259 D	WASHER, odometer lower driven gear and shaft thrust (843)
18	37 574 D	BEARING, odometer drive gear (spiral) ball (96358)
19	31 180 D	LOCK, rear odometer drive gear shaft bearing
20	26 256 D	BEARING, odometer drive gear shaft (rear)
21	275 918 R11	HOUSING w/BEARING, 37 574 D and PIN, 6 403 T, odometer drive (Unit B)
21	275 919 R11	HOUSING w/BEARING, 37 574 D and PIN, 6 403 T, odometer drive (Unit A) 3/8 x 1" hex-hd. cap SCREW (2) 3/8" lock WASHER (2)

SERVICE METER ATTACHMENT
(Veedor-Root) (T-61, TD-61 and TD-91)

-234-

MISCELLANEOUS EQUIPMENT

REF. NO.	PART NUMBER	DESCRIPTION
		ODOMETER (Stewart-Warner Corporation) (T-61, TD-61 and TD-91) - Continued
22	362 796 R1	RING, odometer drive housing sealing (will work for 275 920 R1)
23	50 826 D	ANCHOR, steering clutch release lever return spring (2)
	106 749	KEY, 1/8 x 1/2" odometer drive gear hub (Woodruff No. 3)
	26 250 D	SCREW, odometer drive gear shaft front bearing retainer (4)

SERVICE METER ATTACHMENT
(Veedor-Root) (T-61, TD-61 and TD-91) - Continued

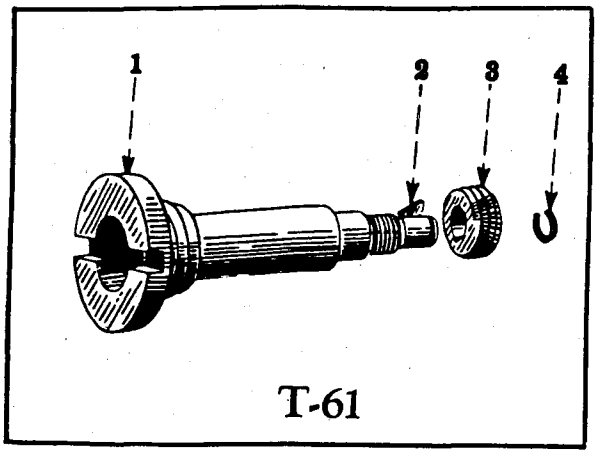

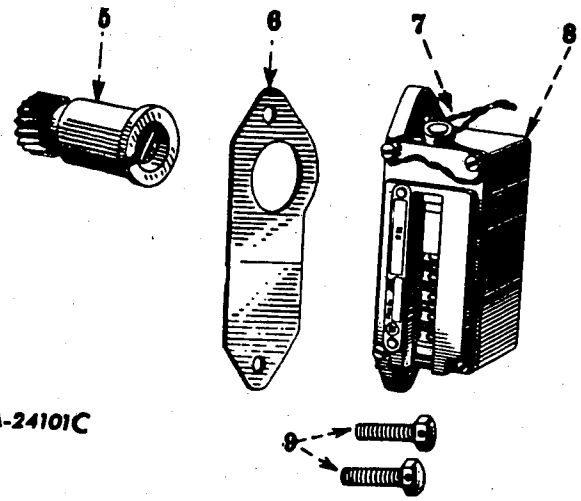

IPA-24101C

⊗ - KEY TO UNITS

A - 275 771 R91 ATTACHMENT, service meter (TD-61 and TD-91) (See NOTE)

B - 265 548 R91 ATTACHMENT, service meter (T-61) (for 1550 RPM engines) (See NOTE)

⊗ Letters of these units correspond with those shown following the description of the parts in the list below and identifies the unit for which the part is used. Items without letters after the description indicates the part is used for all units.

1	352 560 R91	SHAFT, distributor drive (Unit B)
2	103 904	KEY, 2-3/32 x 1/2" service meter drive gear (Woodruff) (Unit B)
3	261 879 R1	GEAR, drive, service meter (Unit B)
4	21 362 D	RETAINER, service meter drive gear (Unit B)
5	52 628 D	SHAFT w/SLEEVE, service meter driven gear (Unit A)
5	265 549 R91	SHAFT w/SLEEVE, service meter driven gear (Unit B)
6	49 451 DA	GASKET, service meter
7	12 736 D	SEAL, service meter
8	261 805 R91	SERVICE METER (Y-73027-3)
9	23 086 D	SCREW, service meter cap (2) 1/4" lock WASHER (2)
	355 121 R21	COVER ASSEMBLY, crankcase front (for components see list of parts under details of "Crankcase")
	354 956 R2	GASKET, crankcase front cover (Unit B)

NOTE - Factory Application - Order on Machine Order Form.
Field Application - Order through Regular Service Parts Channels.

PRINTED IN UNITED STATES OF AMERICA

MISCELLANEOUS EQUIPMENT

PART NUMBER	DESCRIPTION

ASSORTED FIELD SERVICE PACKAGES AND SETS

CARBURETED ENGINE

352 749 R94	PACKAGE, crankshaft .030" undersize field service (See NOTE)
355 140 R92	PACKAGE, water pump field service (See NOTE)
363 144 R92	PACKAGE, gasket set field service (See NOTE)
365 591 R91	PACKAGE, governor overhaul field service (See NOTE)

DIESEL ENGINE

261 339 R92	PACKAGE, cylinder head replacement (See NOTE)

ELECTRICAL SYSTEM

275 574 R91	PACKAGE, door field service (See NOTE) (3)
353 051 R91	PACKAGE, oil seal field service (See NOTE)

MISCELLANEOUS

259 689 R11	PACKAGE, engine clutch brake disc facing field service (See NOTE) (X)
265 114 R91	PACKAGE, lubrication gun field service (See NOTE)
267 679 R91	PACKAGE, connecting link pin field service (See NOTE) (2)
267 680 R91	PACKAGE, connecting link pin field service (See NOTE) (2)
272 857 R91	PACKAGE, track link bushing field service (See NOTE)
274 912 R91	PACKAGE, track roller oil seal leather washer field service (See NOTE) (8)
274 973 R91	PACKAGE, steering brake band lining field service (See NOTE) (4)
277 416 R91	PACKAGE, clutch facing field service (See NOTE)
277 424 R91	PACKAGE, clutch facing field service (See NOTE)
279 436 R91	PACKAGE, high low reverse idler gear field service
279 437 R91	PACKAGE, high low reverse idler gear field service

HYDRAULIC SYSTEM

356 889 R91	PACKAGE, hydraulic pump seal ring and gasket field service (See NOTE) (X)
362 331 R93	PACKAGE, hydraulic pump seal ring and gasket field service (See NOTE) (X)
363 138 R91	PACKAGE, hydraulic cylinder seal ring (3-1/2 x 8") (See NOTE) (X)

NOTE - Component parts and serial numbers are listed in the Engine, Electrical, Miscellaneous or Hydraulic Sections of this Catalog

X - As Required

-235-

MISCELLANEOUS EQUIPMENT

PART NUMBER	DESCRIPTION

ASSORTED GASKET SETS
(T-61, TD-61 and TD-91)

55 621 DE — GASKET SET, engine (T-61)
47 gaskets as follows -

57 613 DA	FELT, crankshaft rear oil seal (2)
46 700 D	GASKET, breather pipe flange
21 632 D	GASKET, carburetor
48 957 DE	GASKET, cylinder head
46 182 DA	GASKET, crankcase front cover
354 956 R1	GASKET, crankcase front cover
46 181 DB	GASKET, crankcase front plate
54 909 H	GASKET, crankcase machine screw (2)
46 109 DA	GASKET, crankcase pan
46 137 D	GASKET, crankcase rear dust seal
46 121 D	GASKET, center crankshaft rear oil seal retainer (2)
46 131 DA	GASKET, crankshaft rear oil seal retainer
46 134 D	GASKET, crankshaft rear oil seal retainer plate
85 069 R1	GASKET, fuel pump opening cover
48 489 D	GASKET, governor connecting rod housing
45 685 D	GASKET, governor housing
49 108 DA	GASKET, governor housing cover
55 780 DD	GASKET, magneto flange
46 186 D	GASKET, magneto bracket
354 952 R2	GASKET, magneto bracket
46 173 DC	GASKET, manifold (2)
45 447 D	GASKET, oil filter base
13 728 D	GASKET, oil filter case
13 841 D	GASKET, oil filter case
13 727 D	GASKET, oil filter case retaining bolt
13 839 D	GASKET, oil filter case retaining bolt
52 808 D	GASKET, oil pan side drain
45 704 D	GASKET, oil pump cover (2)
49 029 DB	GASKET, push rod chamber side plate
45 984 D	GASKET, thermostat housing
48 501 DA	GASKET, throttle lever cover
53 877 DA	GASKET, throttle shaft housing felt retainer
66 272 D	GASKET, throttle shaft housing to carburetor
45 952 DB	GASKET, valve cover
46 128 DA	GASKET, water header
45 986 D	GASKET, water outlet elbow
45 981 D	GASKET, water pump body
21 839 DB	GASKET, water pump bearing retainer
25 093 DA	PLUG, crankshaft rear oil seal retainer plate felt (2)
48 493 D	WASHER, throttle shaft housing felt
20 300 D	WASHER, water pump felt

354 476 R95 — GASKET SET, valve grinding (T-61)
9 gaskets as follows -

21 632 D	GASKET, carburetor
48 957 DD	GASKET, cylinder head
46 173 DC	GASKET, manifold (2)
45 984 D	GASKET, thermostat housing
48 501 DA	GASKET, throttle lever cover
45 952 DB	GASKET, valve cover
45 986 D	GASKET, water outlet elbow
62 866 D	WASHER, valve housing stud nut (2)

PRINTED IN UNITED STATES OF AMERICA

ASSORTED GASKET SETS
(T-61, TD-61 and TD-91) - Continued

IH Part Number	Description
332 653 R91	PACKAGE, crankcase gasket (will work for GASKET SET, 264 815 R93) (50 GASKETS as follows -
260 001 R2	FELT, crankcase rear oil seal retainer (not req'd for 61 Series)(2)
54 040 D	GASKET, air cleaner pipe elbow
64 521 D	GASKET, auxiliary fuel filter bottom plate (not required for 61 Series)
46 583 DA	GASKET, Bosch fuel injection pump
59 481 DB	GASKET, breather body
46 700 D	GASKET, breather pipe flange
53 459 DA	GASKET, carburetor
13 839 D	GASKET, case retaining bar (not required for 61 Series)
261 218 R3	GASKET, crankcase front plate
51 976 D	GASKET, crankcase front plate (not required for 61 Series)
51 977 D	GASKET, crankcase front cover (not required for 61 Series)
46 137 D	GASKET, crankcase rear dust seal
52 001 D	GASKET, crankcase oil pan
271 702 R1	GASKET, crankcase rear oil seal retainer (2)
46 240 DB	GASKET, crankshaft rear oil seal retainer
51 980 D	GASKET, crankshaft rear oil seal retainer plate
55 780 DD	GASKET, distributor unit flange
261 203 R1	GASKET, distributor unit bracket
13 728 D	GASKET, fuel filter case (2)
13 727 D	GASKET, fuel filter case stud (2)
261 219 R2	GASKET, front cover
46 254 DA	GASKET, fuel pump gear cover
62 939 DB	GASKET, injection pump
52 129 D	GASKET, magneto bracket (not required for 61 Series)
42 733 DB	GASKET, oil filler body
59 658 D	GASKET, oil pan drain plug
51 204 D	GASKET, oil filter base (not required for 61 Series)
272 473 R1	GASKET, oil filter base
28 781 D	GASKET, oil pressure regulating valve nut
51 044 DA	GASKET, oil pump body and cover (2)
60 570 D	GASKET, push rod plate (2)
340 092 R1	GASKET, push rod plate bolt (4)
21 839 DB	GASKET, water pump bearing retainer
45 981 D	GASKET, water pump body
51 527 DC	GASKET, water trap
260 708 R2	GASKET, water trap bowl
268 770 R2	PLUG, crankcase rear oil seal retainer plate (2)
20 300 D	WASHER, water pump felt)
261 339 R92	GASKET SET, cylinder head replacement (TD-61) (14 GASKETS as follows -
53 436 DE	GASKET, cylinder head
52 649 D	GASKET, exhaust manifold (3)
52 520 DB	GASKET, intake manifold end cover (2)
52 650 DC	GASKET, intake manifold (2)
45 984 D	GASKET, thermostat housing
52 019 D	GASKET, valve cover
45 986 D	GASKET, water outlet elbow
62 866 D	WASHER, valve cover stud nut (3)

ASSORTED GASKET SET
(T-61, TD-61 and TD-91) - Continued

IH Part Number	Description
261 340 R91	GASKET SET, cylinder head (TD-91) (14 GASKETS as follows -
273 668 R1	GASKET, cylinder head
48 311 D	GASKET, exhaust manifold (3)
51 668 DB	GASKET, intake manifold (2)
45 984 D	GASKET, thermostat housing
51 194 DA	GASKET, valve cover
45 986 D	GASKET, water outlet elbow
52 550 DB	GASKET, intake manifold end cover (2)
340 092 R1	WASHER, valve cover stud nut (3)
332 654 R91	PACKAGE, crankcase gasket (will work for GASKET SET, 57 305 D) (49 GASKETS As follows -
51 939 D	GASKET, air cleaner pipe flange
53 955 D	GASKET, air cleaner pipe flange (not required for 91 Series)
64 521 D	GASKET, auxiliary fuel filter bottom plate (not req'd for 91 Series)
46 583 DA	GASKET, Bosch fuel injection pump
59 481 DB	GASKET, breather body
46 700 D	GASKET, breather pipe flange
53 459 DA	GASKET, carburetor
13 839 D	GASKET, case retaining bar nut (not required for 91 Series)
51 310 D	GASKET, crankcase front plate (not required for 91 Series)
261 201 R3	GASKET, crankcase front plate
51 312 D	GASKET, crankcase oil seal retainer
46 137 D	GASKET, crankcase rear dust seal
51 316 DB	GASKET, crankcase water header (2)
252 032 R3	GASKET, crankshaft rear oil seal retainer
271 702 R1	GASKET, crankshaft rear oil seal retainer (2)
261 203 R1	GASKET, distributor unit bracket
261 200 R3	GASKET, front cover
13 728 D	GASKET, fuel filter case (2)
13 727 D	GASKET, fuel filter case stud (2)
48 143 DC	GASKET, fuel pump gear cover
62 939 DB	GASKET, IH fuel injection pump
55 780 DD	GASKET, magneto flange
51 775 D	GASKET, magneto bracket (not required for 91 Series)
42 733 DB	GASKET, oil filler body
51 204 D	GASKET, oil filter base (by-pass filter) (not required for 91 Series)
272 473 R1	GASKET, oil filter base (full flow)
13 841 D	GASKET, oil filter case (not required for 91 Series)
51 318 D	GASKET, oil pan
59 658 D	GASKET, oil pan drain plug
28 781 D	GASKET, oil pressure by-pass valve nut
28 781 D	GASKET, oil pressure regulating valve nut
51 044 DA	GASKET, oil pump body and cover (2)
60 570 D	GASKET, push rod chamber side plate (2)
340 092 R1	GASKET, push rod chamber side plate bolt (4)
21 839 DB	GASKET, water pump bearing retainer
47 955 D	GASKET, water pump body
51 527 DC	GASKET, water trap bracket
268 770 R2	PLUG, crankcase rear seal plate (2)
20 300 D	WASHER, water pump felt)

PART NUMBER	DESCRIPTION

ASSORTED GASKET SETS
(T-61, TD-61 and TD-91) - Continued

57 305 D	GASKET SET, engine (TD-91) - Continued 99 gaskets as follows - Continued
28 781 D	GASKET, oil pressure regulating valve nut
28 781 D	GASKET, oil pressure by-pass valve retaining nut
51 044 DA	GASKET, oil pump body
51 044 DA	GASKET, oil pump cover
43 002 DA	GASKET, pre-combustion chamber (8)
251 042 R4	GASKET, pre-combustion chamber (8)
60 570 D	GASKET, push-rod chamber side plate (2)
62 866 D	GASKET, push-rod chamber side plate bolt (4)
45 984 D	GASKET, thermostat housing
51 194 DA	GASKET, valve cover
45 194 DA	GASKET, water outlet elbow
21 839 DB	GASKET, water pump bearing retainer
47 955 D	GASKET, water pump body
51 527 DC	GASKET, water trap bracket
268 770 R2	PLUG, crankcase rear seal plate (2)
251 044 R2	SEAL, nozzle body dust (4)
260 608 R1	SEAL, nozzle fitting dust (4)
20 300 D	WASHER, water pump felt
62 866 D	WASHER, valve cover stud nut (3)

DECALCOMANIAS
(T-61, TD-61 and TD-91)

1 000 729 R3	DECALCOMANIA, model symbol (T-6) (fuel tank sides) (T-61) (2)
1 000 730 R2	DECALCOMANIA, model symbol (TD-6) (fuel tank sides) (TD-61) (2)
1 000 736 R1	DECALCOMANIA, model symbol (fuel tank sides) (TD-91) (2)
1 000 889 R4	DECALCOMANIA, injection pump lubrication (TD-61 and TD-91)
1 001 013 R5	DECALCOMANIA, lubrication oil filter instruction (T-61)
1 001 071 R2	DECALCOMANIA, generator warning (T-61, TD-61 and TD-91)
1 001 336 R3	DECALCOMANIA, fuel filter instruction (TD-61 and TD-91)
1 001 441 R1	DECALCOMANIA, "Diesel" (TD-61 and TD-91)
1 011 516 R1	DECALCOMANIA, air cleaner instruction (for Donaldson cleaner) (T-61, TD-61 and TD-91)
1 001 632 R1	DECALCOMANIA, "International" (rear of tank) (T-61 and TD-61)
1 001 452 R2	DECALCOMANIA, "International" (TD-91)
1 001 634 R1	DECALCOMANIA, "I.H." Monogram (radiator sides) (T-61, TD-61 and TD-91) (2)
1 001 701 R2	DECALCOMANIA, auxiliary fuel filter instruction (TD-61 and TD-91)
1 001 736 R1	DECALCOMANIA, lubrication oil filter instruction (TD-61 and TD-91)
1 001 884 R1	DECALCOMANIA, "I.H." Monogram (rear of tank) (T-61 and TD-61)
2 750 005 R1	DECALCOMANIA, shifting diagram (T-61, TD-61 and TD-91)
2 750 008 R1	DECALCOMANIA, shifting diagram (for two speed reverse transmission) (T-61, TD-61 and TD-91)
2 750 083 R1	DECALCOMANIA, "International" (on hood) (T-61, (TD-61 and TD-91) (2)
2 750 243 R2	DECALCOMANIA, engine shut-down (T-61 and TD-61)

-237-

MISCELLANEOUS EQUIPMENT

PART NUMBER	DESCRIPTION

RIGID TRACK LOADER
(T-61)

T-6-425-1	EQUIPMENT COMBINATION, rigid track loader (T-61) 50 inch gauge crawler tractor
53 816 DB	ATTACHMENT, front power take-off coupling (See NOTE)
254 801 R94	ATTACHMENT, rigid extended track frame (5 roller) (See NOTE)
256 352 R91	ATTACHMENT, blower fan (See NOTE)
273 638 R91	ATTACHMENT, large diameter front idler (See NOTE)
275 798 R92	ATTACHMENT, two speed reverse transmission (See NOTE)
277 506 R91	ATTACHMENT, 12" overlapping flat track shoe (low profile three grouser) (See NOTE)
279 096 R91	ATTACHMENT, crankcase guard (See NOTE)
276 132 R91	BOX, 21" tool 3/8" NUT (4) 3/8 x 1" hex-hd. cap SCREW (4) 3/8" lock WASHER (4)
276 440 R91	CARBURETOR, same as CARBURETOR, 362 583 R91 listed in fuel system of this catalog. Except -

The following items are deducted from CARBURETOR, 362 583 R91 -

BOWL ASSEMBLY, fuel	365 609 R91
NOZZLE, metering	365 613 R1
VENTURI (optional with 64 987 D23)	47 407 D23
VENTURI (optional with 47 407 D23)	64 987 D23

The following items are added to CARBURETOR, 362 583 R91 -

	BOWL ASSEMBLY, fuel	365 819 R91
	(Composed of -	
1	AIR BLEED	35 606 D53
§1	BOWL	
§1	FILLER	
1	PIN	351 588 R1
§1	PLUG	
§1	PLUG	
1	RETAINER	45 148 D
1	SEAL	45 149 DA
1	SEAT	261 095 R1)
	NOZZLE, metering	365 796 R1
	VENTURI (optional with 64 987 D25	47 407 D25
	VENTURI (optional with 47 407 D25	64 987 D25.

277 772 R1	CHANNEL, LH main frame side (See NOTE)
277 773 R1	CHANNEL, RH main frame side (See NOTE)
278 139 R91	LEVER w/BALL, hand transmission gear shift 264 055 R2
276 436 R11	PLATFORM, LH 3/8 x 3/4" hex-hd. cap SCREW 3/8 x 1-3/8" WASHER (Shakeproof No. 4520-22-00)
276 437 R91	PLATFORM, RH 3/8NF NUT 3/8 x 3/4" hex-hd. cap SCREW (2) 3/8" lock WASHER (2)
276 135 R1	3/8 x 1-3/8" plain WASHER (Shakeproof No. 4520-22-00) 13/32 x 13/16" x No. 16 ga. flat WASHER (2)
277 464 R11	PLATE, voltage regulator mounting 3/8 x 9/16" hex-hd. cap SCREW (4) 3/8" lock WASHER (4)
278 373 R1	SHEET, LH engine side
278 374 R1	SHEET, RH engine side
357 673 R1	SPRING, governor

-238-

EQUIPMENT COMBINATIONS

PART NUMBER	DESCRIPTION

RIGID TRACK LOADER
(T-61) - Continued

T-6-425-1	EQUIPMENT COMBINATION, rigid track loader (T-61) 50 inch gauge crawler tractor - Continued
	SCREW, 1/4 x 1" slt-rd-hd. machine (to attach voltage regulator (4)
	WASHER, 13/32 x 13/16" x No. 16 ga. flat (used as shims between LH platform support angle and Drott seat supports) (2) WASHER, 13/32 x 11/16" x No. 16 ga. flat (used as shims between RH platform support angle and Drott seat supports) (2)

The following additional Attachments can also be furnished when ordered to be used with the above Rigid Track Loader Equipment Combination

5 961 DX	ATTACHMENT, front pull hook (See NOTE)
51 579 D	ATTACHMENT, spark arrester (See NOTE)
53 556 D	ATTACHMENT, exhaust extension (See NOTE)
57 525 D	ATTACHMENT, cut-away sprocket (See NOTE)
254 799 R91	ATTACHMENT, 12" over-lapping flat track shoe (See NOTE) ⊕
254 794 R91	ATTACHMENT, 12" square corner track shoe (See NOTE)
255 876 R91	ATTACHMENT, low boiling point thermostat and heat indicator (See NOTE)
255 878 R91	ATTACHMENT, 12" staggered lug grouser track shoe (See NOTE) ⊕
257 724 R92	ATTACHMENT, 12" clipped corner track shoe (See NOTE) ⊕
257 789 R91	ATTACHMENT, sprocket drive housing shield (See NOTE)
258 870 R91	ATTACHMENT, 12" overlapping flat track shoe (low straight type grouser)
263 431 R91	ATTACHMENT, front idler shield (See NOTE)
263 859 R91	ATTACHMENT, magneto ignition (See NOTE)
264 137 R92	ATTACHMENT, exhaust muffler (See NOTE)
266 337 R91	ATTACHMENT, fuel strainer
267 748 R91	ATTACHMENT, track roller shield (See NOTE)
274 515 R91	ATTACHMENT, track frame diagonal brace

(Composed of -

2	BEARING SET	57 234 D
1	BRACE	258 288 R3
1	BRACE	258 289 R3
2	BUSHING	57 238 D
2	CLAMP	8 468 DA
4	FEET	53 646 D
2	FITTING	271 409
8	NUT	32 454 D
4	PIN	265 596 R1
2	SHIM	45 994 D
2	SHIM	45 995 D
4	SHIM	45 996 D
2	SHIM	45 997 D
2	SHIM	45 998 D
4	SHIM	45 999 D
8	STUD	62 385 D)

274 570 R91	ATTACHMENT, headlight brush guard (See NOTE)
275 390 R91	ATTACHMENT, radiator shutter (See NOTE)
275 292 R91	ATTACHMENT, air pipe extension (See NOTE)
277 869 R91	ATTACHMENT, hood side door (See NOTE)
277 208 R91	ATTACHMENT, air pre-cleaner (collector type) (See NOTE)
275 791 R91	ATTACHMENT, electric hourmeter (See NOTE)
275 911 R91	ATTACHMENT, ignition lock switch (See NOTE)
276 198 R91	ATTACHMENT, distillate burning (See NOTE)
281 424 R91	ATTACHMENT, exhaust rain cap (See NOTE)

NOTE - Detail parts are listed in Standard Parts Section or Miscellaneous equipment Section of this Catalog.

⊕ - 12 inch is the maximum allowable track shoe width on this combination

§ - Not Furnished Separately

EQUIPMENT COMBINATIONS

PART NUMBER	DESCRIPTION

RIGID TRACK LOADER
(TD-61)

TD-6-424-1	EQUIPMENT COMBINATION, rigid track loader (TD-61) 50 inch gage crawler tractor
53 826 DA	ATTACHMENT, front power take-off coupling (See NOTE)
254 801 R94	ATTACHMENT, rigid extended track frame (5 roller) (See NOTE)
256 352 R91	ATTACHMENT, blower fan (See NOTE)
273 638 R91	ATTACHMENT, large diameter front idler (See NOTE)
275 798 R92	ATTACHMENT, two speed reverse transmission (See NOTE)
277 506 R91	ATTACHMENT, 12" overlapping flat track shoe (lower profile three grouser (See NOTE)
279 096 R91	ATTACHMENT, crankcase guard (See NOTE)
276 132 R91	BOX, 21" tool 3/8" NUT (4) 3/8 x 1" hex-hd. cap SCREW (4) 3/8" lock WASHER (4)
277 772 R1	CHANNEL, LH main frame side
277 773 R1	CHANNEL, RH main frame side
253 584 R1	LEVER, injection pump control 1/4NF x 7/8" hex-hd. cap SCREW 1/4" lock WASHER
278 139 R91	LEVER w/BALL, 264 055 R2, hand transmission gear shift
277 464 R11	PLATE, voltage regulator mounting 3/8 x 9/16" hex-hd. cap SCREW (4) 3/8" lock WASHER (4)
276 436 R11	PLATFORM, LH 3/8 x 3/4" hex-hd. cap SCREW
276 135 R1	WASHER, 3/8 x 1-3/8" (Shakeproof No. 4520-22-00)
276 437 R91	PLATFORM, RH 3/8NF NUT 3/8 x 3/4" hex-hd. cap SCREW (2) 3/8" lock WASHER (2)
276 135 R1	WASHER, 3/8 x 1-3/8" (Shakeproof No. 4520-22-00) 13/32 x 13/16" x No. 16 ga. WASHER (2)
270 023 R91	PUMP, fuel injection Model "B" (1550 RPM) (9% regulation) ⊛
278 373 R1	SHEET, LH engine side
278 374 R1	SHEET, RH engine side
	SCREW, 1/4 x 1" slt-rd-hd. mach. (to attach voltage regulator) (4)
	WASHER, 13/32 x 13/16 x No. 16 ga. flat (used as shims between LH platform support angle and Drott seat supports) (2)
	WASHER, 13/32 x 13/16" x No. 16 ga. flat (used as shims between RH platform support angle and Drott seat supports) (2)

The following additional Attachments can also be furnished when ordered to be used with the above Rigid Track Loader Equipment combination -

5 961 DX	ATTACHMENT, front pull hook (See NOTE)
57 525 D	ATTACHMENT, cut-away sprocket (See NOTE)
254 799 R91	ATTACHMENT, 12" overlapping flat track shoe (See NOTE) ⊕
254 794 R91	ATTACHMENT, 12" square corner track shoe (See NOTE) ⊕
255 876 R91	ATTACHMENT, low boiling point thermostat and heat indicator (See NOTE)
255 878 R91	ATTACHMENT, 12" staggered lug grouser track shoe (See NOTE) ⊕
257 724 R92	ATTACHMENT, 12" clipped corner track shoe (See NOTE) ⊕

EQUIPMENT COMBINATIONS

PART NUMBER	DESCRIPTION

RIGID TRACK LOADER
(TD-61) - Continued

TD-6-424-1	EQUIPMENT COMBINATION, rigid track loader (TD-61) 50 inch gage crawler tractor - Continued
257 789 R91	ATTACHMENT, sprocket drive housing shield (See NOTE)
258 870 R91	ATTACHMENT, 12" overlapping flat track shoe (low straight type grouser) (See NOTE)
263 431 R91	ATTACHMENT, front idler shield (See NOTE)
263 740 R91	ATTACHMENT, magneto ignition (See NOTE)
266 337 R91	ATTACHMENT, fuel strainer
267 748 R91	ATTACHMENT, track roller shield (See NOTE)
269 630 R91	ATTACHMENT, chevron pressure primer disel starting (See NOTE)
273 777 R91	ATTACHMENT, double flange track roller (See NOTE)
274 515 R91	ATTACHMENT, track frame diagonal brace (Composed of -

2	BEARING SET	57 234 D
1	BRACE	258 288 R3
1	BRACE	258 289 R3
2	BUSHING	57 238 D
2	CLAMP	8 468 D
4	FELT	53 646 D
2	FITTING	271 409
8	NUT	32 454 D
4	PIN	265 596 R1
2	SHIM	45 994 D
2	SHIM	45 995 D
4	SHIM	45 996 D
2	SHIM	45 997 D
2	SHIM	45 998 D
4	SHIM	45 999 D
8	STUD	62 385 D)

274 570 R91	ATTACHMENT, headlight brush guard (See NOTE)
275 390 R91	ATTACHMENT, radiator shutter (See NOTE)
275 292 R91	ATTACHMENT, air pipe extension (See NOTE)
275 792 R91	ATTACHMENT, electric hourmeter (See NOTE)
275 911 R91	ATTACHMENT, ignition lock switch (See NOTE)
277 050 R91	ATTACHMENT, watchdog fuel filter (See NOTE)
277 208 R91	ATTACHMENT, air pre-cleaner (collector type) (See NOTE)
277 288 R91	ATTACHMENT, exhaust rain cap (See NOTE)
277 869 R91	ATTACHMENT, hood side door (See NOTE)

⊕ - 12 inch is the maximum allowable track shoe width on this combination.

NOTE - Detail parts are listed in Standard Parts Section of Miscellaneous Equipment Section of this catalog.

⊛ - Refer to Fuel Injection Pump Parts Catalog PU-40A when ordering detail parts for complete Model "B" Fuel Injection Pumps and also for Special Model "B" Fuel Injection Pumps not listed above. For Speed Charts see Injection Pump Parts Catalog PU-40A.

PART NUMBER	DESCRIPTION

RIGID TRACK LOADER
(TD-91)

⊗ KEY TO UNITS

A -	TD-9-424-0	EQUIPMENT COMBINATION, rigid track loader (TD-91) 60 inch gauge crawler tractor
B -	TD-9-424-2	EQUIPMENT COMBINATION, rigid track loader (TD-91) 60 inch gauge crawler tractor

⊗ Letters of these units correspond with those shown following the description of the parts in the list below and identifies the unit for which the part is used. Items without letters after the description indicates the part is used for all units.

54 038 DA	ATTACHMENT, crankcase guard (See NOTE)
277 017 R91	ATTACHMENT, rigid extended track frame (used with idler ATTACHMENT, 277 099 R91) (See NOTE) (5 roller) (Unit B)
254 809 R94	ATTACHMENT, rigid extended track frame (See NOTE) (5 roller) (Unit B)
256 351 R91	ATTACHMENT, blower fan (See NOTE)
258 873 R91	ATTACHMENT, 15" overlapping flat track shoe (See NOTE)(*)(Unit A)
277 510 R91	ATTACHMENT, 15" overlapping low profile three grouser track shoe (See NOTE)(*)(Unit B)
272 139 R91	ATTACHMENT, large diameter front idler (See NOTE) (for 36 link track) (Unit A)
275 772 R91	ATTACHMENT, two speed reverse transmission (See NOTE)
277 099 R91	ATTACHMENT, large diameter front idler (for 37 link track (See NOTE) (Unit B)
276 132 R91	BOX, 21" tool 3/8" NUT (4) 3/8 x 1" hex-hd. cap SCREW (4) 3/8" lock WASHER (4)
276 136 R91	CHANNEL, LH main frame side
276 137 R91	CHANNEL, RH main frame side
276 634 R1	CLIP, tube (fuel tube and fuel return tube)
8 505 D	COUPLING, fan drive pulley splined
253 584 R1	LEVER, injection pump control 1/4NF x 7/8" hex-hd. cap SCREW 1/4" lock WASHER
276 099 R92	LEVER w/BALL, 264 055 R2, gear shift hand
18 767 D	LOCK, fan drive pulley
269 292 R1	PIN, drive (2)
9 409 239	SCREW, 3/8 x 1-3/4" hex-hd. cap (Type "A") (6)
277 464 R11	PLATE, voltage regulator mounting (Unit B)
276 097 R11	PLATE, voltage regulator mounting (Unit A) 3/8 x 9/16" hex-hd. cap SCREW (4) 3/8" lock WASHER (4)
276 129 R11	PLATFORM, LH 3/8 x 3/4" hex-hd. cap SCREW
276 135 R1	WASHER, 3/8 x 1-3/8" (Shakeproof 4520-22-00)
276 130 R91	PLATFORM, RH 3/8 x 3/4" hex-hd. cap SCREW (3) 3/8" lock WASHER (2) 13/32 x 13/16" x No. 16 ga. WASHER (2)
276 135 R1	WASHER, 3/8 x 1-3/8" (Shakeproof 4520-22-00)
6 565 DB	PULLEY, fan drive
270 075 R91	PUMP, fuel injection (1650 RPM) (9% regulation)(+)

PART NUMBER	DESCRIPTION

RIGID TRACK LOADER
(TD-91) - Continued

	WASHER, 13/32 x 13/16 x 1/16" (used as Shims between LH and RH Platform Support Angle and Drott Seat Supports) (4)
	WASHER, 1-1/16 x 2 x 1/8" (for Drott Tie Rod) (2)
18 558 R1	NUT, 3/4NF (used with Drott carrying frame to rigid bar rear) (4)
18 584 R1	NUT, 7/8NF (used with Drott carrying frame to rigid bar front) (4)
271 686	SCREW, 7/8NF x 4" hex-hd. cap (used with Drott carrying frame to rigid bar rear) (4)
	NUT, 3/8" (radiator guard to main frame side channels) (4) SCREW, 5/8 x 3/4" hex-hd. cap (radiator guard to main frame side channels) (4) WASHER, 5/8" lock (radiator guard to main frame side channels) (4)
	SCREW, 3/8 x 1-1/4" hex-hd. cap (high pressure line to Drott valve) (4)
	WASHER, 3/8" lock (Drott valve) (4)
	SCREW, 3/4 x 1-1/2" hex-hd. cap (hydraulic pump to tractor) (4)
	SCREW, 7/16 x 1-1/2" hex-hd. cap (Drott hydraulic pipes to pump) (8) WASHER, 7/16" lock (Drott hydraulic pipes to pump) (8)
	SCREW, 1/4 x 1" rd-hd. machine (to attach voltage regulator) (4)
	NUT, 1/2" (pipe clamp high and low pressure tube assemblies) SCREW, 1/2 x 2-1/2" hex-hd. cap (pipe clamp high and low pressure tube assemblies) WASHER, 1/2" lock (pipe clamp high and low pressure tube assemblies)
	NUT, 3/8" (clamp to clamp bracket) (Unit B) SCREW, 3/8 x 3" hex-hd. cap (clamp to clamp bracket) (Unit B) WASHER, 3/8" lock (clamp to clamp bracket) (Unit B)
138 322 H	FITTING, 1/8" lubrication (optional with 191 758) (push frame) (2)
191 758	FITTING, 1/8" lubrication (optional with 138 322 H) (hinge bearing) (2)
	SCREW, 3/4 x 4" hex-hd. cap (high and low pressure clamp bracket assembly to oil filter pipe) (Unit B) SCREW, 3/8 x 4-1/2" hex-hd. cap (high and low pressure clamp bracket assembly to oil filter pipe) (Unit B) WASHER, 13/32 x 13/16 x 1/16" (high and low pressure clamp bracket assembly to oil filter pipe) (2 for Unit B)

(*) - 15 inch in the maximum allowable track shoe width on this combination

NOTE - Detail parts are listed in Standard Parts Section or Miscellaneous Equipment Section of this Catalog.

(+) - Refer to Fuel Injection Pump Parts Catalog PU-40A when ordering detail parts for complete Model "B" Fuel Injection Pumps and also for Special Model "B" Fuel Injection Pumps not listed above. For Speed Charts see Injection Pump Parts catalog PU-40A.

-241-

EQUIPMENT COMBINATIONS

PART NUMBER	DESCRIPTION

RIGID TRACK LOADER
(TD-91) - Continued

The following additional attachments can also be furnished when ordered to be used with the above Rigid Track Loader Equipment Combination

5 961 DX	ATTACHMENT, front pull hook (See NOTE)
57 536 D	ATTACHMENT, cut-away sprocket (See NOTE)
277 018 R91	ATTACHMENT, 15" overlapping flat track shoe (low straight type grouser) (See NOTE) ⊛ (Unit B)
277 019 R91	ATTACHMENT, 15" overlapping flat track shoe (See NOTE) ⊛ (Unit B)
254 981 R91	ATTACHMENT, 15" overlapping flat track shoe (See NOTE) ⊛ (Unit A)
255 876 R91	ATTACHMENT, low boiling point thermostat and heat indicator (See NOTE)
255 879 R91	ATTACHMENT, 15" staggered lug grouser track shoe (See NOTE) ⊛ (Unit A)
277 020 R91	ATTACHMENT, 15" staggered lug grouser track shoe (See NOTE) (Unit B)
257 773 R92	ATTACHMENT, 15" clipped corner track shoe (See NOTE) ⊛ (Unit A)
257 777 R91	ATTACHMENT, sprocket drive housing shield (See NOTE)
277 021 R91	ATTACHMENT, 15" clipped corner track shoe (See NOTE) ⊛ (Unit B)
263 420 R91	ATTACHMENT, front idler shield (See NOTE)
263 782 R91	ATTACHMENT, magneto ignition (See NOTE)
267 881 R91	ATTACHMENT, track roller shield (See NOTE)
269 630 R91	ATTACHMENT, chevron pressure primer diesel starting (See NOTE)
273 778 R91	ATTACHMENT, double flange track roller (See NOTE)
274 516 R91	ATTACHMENT, track frame diagonal brace (Composed of -

2	BEARING SET	57 235 D
1	BRACE	258 299 R3
1	BRACE	258 300 R3
2	BUSHING	57 239 D
2	CLAMP	8 471 DA
4	FELT	53 656 D
2	FITTING	271 409
8	NUT	45 293 D
4	PIN	266 064 R1
4	SHIM	47 778 D
4	SHIM	47 779 D
8	SHIM	47 780 D
8	STUD	63 265 D)

274 570 R91	ATTACHMENT, headlight brush guard (See NOTE)
275 290 R91	ATTACHMENT, radiator shutter (See NOTE)
275 292 R91	ATTACHMENT, air pipe extension (See NOTE)
277 877 R91	ATTACHMENT, hood side door (See NOTE)
275 774 R91	ATTACHMENT, air pre-cleaner (Collector Type) (See NOTE)
275 792 R91	ATTACHMENT, electric hourmeter (See NOTE)
275 911 R91	ATTACHMENT, ignition lock switch (See NOTE)
277 043 R91	ATTACHMENT, watchdog fuel filter (See NOTE)
277 288 R91	ATTACHMENT, exhaust rain cap (See NOTE)
266 337 R91	ATTACHMENT, fuel strainer
303 962 R1	GASKET, fuel strainer

⊛ - 15 inch is the maximum allowable track shoe width on this combination
NOTE - Detail parts are listed in Standard Parts Section or Miscellaneous Equipment Section of this Catalog.

PRINTED IN UNITED STATES OF AMERICA

NUMERICAL INDEX

PART NUMBER	APPROX. WEIGHT IN POUNDS	PAGE
No.		
114		228
116		228
118		228
120		228
122		228
124		228
126		228
128		228
130		228
132		228
134		228
136		228
138		228
140		228
195		228
719		227
861		228
1 465		89
5 852		229
11 230		229
12 517		229
12 518		229
31 038		229
34 080		229
34 816		86
37 535		118
42 915		126
45 239		229
45 728		229
45 836		229
51 609		148
55 005		229
55 264		229
61 443		229
62 028		229
63 089		229
66 007		229
68 513		229
91 084		229
91 581		229
112 726		117
115 903		89
120 214		117
120 217		88
120 368		113
120 380		86
120 381		89
120 614		88
120 622		89
120 638		86
121 743		86
121 841		89
122 159		89
124 545		86
124 546		89
124 548		111
124 818		87
125 947		118
131 044		89
131 183		118
131 238		86
132 100		86
132 119		118
132 688		113
132 892		89
132 903		117
132 908		117

NUMERICAL INDEX

PART NUMBER	APPROX. WEIGHT IN POUNDS	PAGE
132 923		86
132 926		88
134 566		89
138 557		88
141 541		86
171 734		117
193 526		118
200 362		86
200 382		113
273 484		87
273 798		87
427 261		86
453 283		117
453 288		117
802 697		89
804 000		86
804 080		113
805 057		89
805 258		89
805 790		89
806 915		86
809 053		89
809 062		86
809 593		89
809 763		86
809 815		89
809 945		86
809 961		113
810 226		89
810 601		89
810 620		89
811 553		89
812 015		89
812 016		89
812 622		89
813 521		89
813 554		89
815 018		113
817 313		89
817 314		89
818 002		89
819 104		113
819 362		89
820 148		118
820 155		118
820 404		89
821 453		117
823 551		113
826 462		118
833 602		89
900 529		86
907 503		113
1 100 342		113
1 105 018		86
1 105 109		111
1 105 112		114
1 107 462		88
1 116 513	1/2	109
1 119 152		115
1 119 176		87
1 119 181		115
1 119 778		117
1 119 935		118
1 837 533		117
1 842 770		109
1 843 646		117
1 847 199		118
1 848 530		89
1 848 837		89
1 849 774		89
1 849 782		89
1 850 810		89
1 850 811		89

NUMERICAL INDEX

PART NUMBER	APPROX. WEIGHT IN POUNDS	PAGE
1 850 812		89
1 850 844		89
1 853 012		89
1 853 305		117
1 853 342		117
1 855 685		117
1 855 936		88
1 855 978		109
1 856 993		114
1 857 268		117
1 857 412		86
1 858 603		86
1 858 751		86
1 858 753		113
1 861 076		89
1 864 099		91
1 865 182		89
1 865 302		89
1 868 788		89
1 871 693		113
1 872 678		118
1 873 844		91
1 874 495		87
1 878 183		86
1 878 184		86
1 878 467		87
1 878 493		87
1 878 502		87
1 878 503		87
1 878 504		87
1 878 505		87
1 878 507		87
1 878 516		87
1 879 530		86
1 879 663		87
1 880 355		117
1 880 371		112
1 880 635		113
1 880 641		113
1 880 781		86
1 880 870		89
1 881 409		86
1 881 869		89
1 882 012		91
1 882 013		91
1 882 994		91
1 883 864		86
1 885 090		86
1 885 296		87
1 886 923		88
1 888 439		113
1 902 746		86
1 903 896		88
1 904 368		113
1 904 370		86
1 904 376		87
1 904 377		86
1 904 436		118
1 904 443		118
1 904 615		89
1 904 661		86
1 904 669		89
1 906 958		117
1 906 965		86
1 909 560		118
1 910 174		115
1 911 028		87
1 911 033		87
1 911 034		87
1 911 263		86
1 911 324		113
1 912 008		113
1 912 059		117

- 243 -

NUMERICAL INDEX

PART NUMBER	APPROX. WEIGHT IN POUNDS	PAGE
1 912 159		87
1 912 176		87
1 913 534		118
1 913 688		86
1 913 689		86
1 913 743		86
1 913 828		88
1 914 491		113
1 914 549		88
1 914 618		113
1 915 668		117
1 915 897		117
1 916 324		113
1 916 529		89
1 917 846		89
1 917 991		89
1 918 002		86
1 918 003		86
1 918 004		86
1 921 362		113
1 921 369		113
1 921 860		113
1 922 288		113
1 922 289		113
1 922 408		87
1 922 599		87
1 922 876		117
1 923 295		113
1 923 400		109
1 923 405		109
1 923 472		111
1 923 473		112
1 923 932		118
1 923 935		117
1 924 764		87
1 926 958		117
1 926 959		118
1 926 969		117
1 927 033		118
1 927 344		117
1 927 345		117
1 927 446		113
1 927 447		113
1 927 448		113
1 927 451		113
1 927 700		113
1 928 021		118
1 928 022		118
1 928 952		113
1 929 959		86
1 930 451		89
1 930 629		117
1 931 771		117
1 931 773		117
1 931 776		117
1 931 777		117
1 931 783		118
1 931 784		117
1 931 788		117
1 931 807		117
1 931 808		117
1 931 812		117
1 931 813		117
1 931 814		117
1 931 818		117
1 931 886		87
1 931 887		87
1 932 079		117
1 932 354		118
1 933 242		87
1 933 879		117
1 934 445		117
1 935 255		118

PRINTED IN UNITED STATES OF AMERICA

NUMERICAL INDEX

PART NUMBER	APPROX. WEIGHT IN POUNDS	PAGE
1 935 316		117
1 935 321		117
1 935 325		117
1 936 330		111
1 936 333		86
1 937 213		86
1 937 217		86
1 937 219		86
1 937 227		86
1 938 151		117
1 938 522		115
1 938 539		114
1 940 134		117
1 940 161		111
1 940 326		113
1 994 053		91
1 996 080		88
9 400 978		209
9 409 239		240
A		
712 A		227
712 A		228
B		
BP 32		227
BP 32		228
B 1 416		228
B 1 820		228
B 2 024		228
B 2 628		228
B 3 032		228
700 B		227
700 B		228
C		
CC 24		227
CC 24		228
D		
DA 12		227
DA 12		228
D 1 612		228
D 2 616		156
D 2 616		159
D 2 616		221
D 2 616		225
2 370 DBX	2 3/8	62
2 370 DBX	2 3/8	64
2 370 DBX	2 3/8	65
4 097 DA		13
4 253 D	1/2	18
4 253 D	1/2	28
4 253 D	1/2	39
4 254 DA	1/8	18
4 254 DA	1/8	28
4 254 DA	1/8	39

NUMERICAL INDEX

PART NUMBER	APPROX. WEIGHT IN POUNDS	PAGE
4 457 D	1 1/2	159
4 819 D	1	25
4 819 D	1/2	36
4 819 DX		14
5 051 DX	1	50
5 370 D		189
5 961 DX	18 1/2	216
5 961 DX	18 1/2	217
5 961 DX	18 1/2	238
5 961 DX	18 1/2	239
5 961 DX	18 1/2	240
5 977 DA		217
6 154 DB		192
6 219 DA	3/4	151
6 236 D	9	148
6 236 D	9	151
6 239 DX		14
6 241 DB		156
6 248 DA		157
6 249 D	1/4	157
6 250 DC	14 1/4	156
6 253 DBX	2 7/8	71
6 275 DXC	118 1/2	17
6 275 DXC	118 1/2	28
6 288 D		69
6 289 D		69
6 297 D	3/4	67
6 331 D	5 1/2	68
6 332 D	6 1/8	68
6 337 D		12
6 338 DR		12
6 344 D		62
6 345 DAX	1 3/4	63
6 345 DAX	1 3/4	64
6 362 DX		14
6 363 DD		13
6 364 DC		14
6 367 DX		73
6 376 DAX	1 1/8	167
6 376 DAX	1 1/8	169
6 470 D	9 3/4	170
6 477 DA	1 1/4	159
6 478 D	3/4	160
6 479 DB		160
6 480 DC	20	159
6 482 DAY	1 3/4	82
6 482 DAY	1 3/4	108
6 483 DAY		82
6 483 DAY		107
6 510 D	2 1/2	174
6 510 D	2 1/2	179
6 514 DBX		48
6 515 DAX		83
6 518 DAX	1 7/8	65
6 526 DBX	128	39
6 565 DB	9	223
6 565 DB	9	240
6 586 D	11 3/4	65
6 608 DR	1/8	33
6 612 D	13	150
6 612 D	13	152
6 612 D	13	154
6 627 DA	100	68
6 628 D	6	68
6 633 DBX		70
6 637 D	2	177
6 652 DB	13	28
6 652 DB	1/4	39
6 659 DA	9 1/4	168
6 676 DB		70
6 679 D	3 1/8	221
6 682 D	2 3/8	221
6 736 DBX		69

NUMERICAL INDEX

PART NUMBER	APPROX. WEIGHT IN POUNDS	PAGE
6 737 D		69
6 760 DB		15
6 765 DC		18
6 777 DA	1 5/8	20
6 783 DAX		108
6 843 D	4 1/2	222
6 846 DX		221
6 857 DA	95	68
6 935 D		223
8 023 DAX		62
8 035 DDX		20
8 044 DR		12
8 104 D	1/4	33
8 110 D	1/8	33
8 111 DA	5/8	33
8 112 D	1	33
8 129 DA	2	191
8 132 DA	1 1/4	191
8 146 DB	4	59
8 153 DE		168
8 154 DA	31	168
8 155 DB	7 7/8	168
8 156 DA	5 1/8	168
8 157 DAX	2 1/4	168
8 162 D	7 1/2	20
8 163 D	3 5/8	20
8 174 D	2 1/2	64
8 198 DR	1/2	22
8 199 D	1/2	22
8 200 D	5/8	22
8 201 D		22
8 202 D	1	22
8 223 DEX		148
8 231 DB	3 1/4	57
8 232 DB	3	194
8 235 D	55	170
8 236 D	7 1/2	170
8 237 DB	13	170
8 238 DB	29	170
8 247 DA	2 1/4	141
8 247 DA	2 1/4	143
8 277 DX	17 1/2	29
8 310 DA		26
8 355 D	4 1/8	25
8 355 D	3	36
8 363 DBX	6 1/8	70
8 372 DAX	1/4	31
8 390 DB	39 1/2	221
8 391 D		222
8 392 DA		222
8 393 DA	7/8	222
8 400 D	8 1/2	174
8 400 D	8 1/2	179
8 403 D	19 1/8	177
8 444 DA	1/2	161
8 444 DA	1/2	163
8 448 DA	72	192
8 450 DA	107	195
8 461 DA		195
8 468 DA	4 5/8	171
8 471 DA	7 3/4	172
8 476 DX		73
8 480 D		73
8 493 DA	2 3/8	152
8 496 D		191
8 497 D		192
8 498 D		191
8 501 DDX		191
8 502 DDX		191
8 503 DCX	80	191
8 504 D	6	191
8 505 D	6	223
8 505 D	6	240

- 245 -

NUMERICAL INDEX

PART NUMBER	APPROX. WEIGHT IN POUNDS	PAGE
8 506 DA	13	223
8 507 D	13 1/4	194
8 508 DA		194
8 509 D	2 3/4	194
8 510 DA		194
8 511 DCX	146	194
8 512 DBX	55	194
8 513 DB	51	194
8 514 DEX	1046	150
8 516 D	13	194
8 521 D	6	191
8 522 D		192
8 617 DAX	1/2	40
8 704 DBXA		12
8 704 DBYA		12
8 732 D		83
8 732 D		84
8 732 D		108
8 744 DR	3/4	22
8 744 DR	3/4	33
8 774 D	73	192
8 775 DA	103	195
8 779 D	1 1/2	156
8 779 D	1 1/2	159
8 807 DA	1/4	222
8 807 DA	1/4	225
8 808 DX	5 3/8	225
8 809 DA	1 1/8	224
8 810 DX	1	224
8 811 DX	38 3/4	224
8 812 D	3/4	224
8 815 D		207
8 816 D		207
8 817 D		207
8 867 DAX		48
8 959 DB	10	26
9 065 DA	10	187
9 245 DA	17	189
9 258 DC		26
9 258 DC		37
9 258 DCX		26
9 258 DCX		37
9 264 D		13
9 265 D		14
9 311 D	5/8	61
9 312 DA	1 1/4	61
9 322 D		217
9 355 D	3	65
9 390 DX		50
9 532 DB	3 1/2	226
9 533 DA	7	226
9 580 D	10 1/4	153
9 581 D	5 1/2	153
9 582 D	5 1/8	153
10 961 D	1/8	74
11 373 D		156
11 373 D		159
11 858 DA	1/8	226
12 215 D		19
12 736 D		70
12 736 D		234
13 194 D		53
13 194 D		55
13 722 D		156
13 722 D		159
13 722 D		221
13 722 D		225
13 727 D		71
13 727 D		77
13 728 D	1/8	71
13 728 D	1/8	77
13 729 D	2 1/4	77
16 025 D		15

PRINTED IN UNITED STATES OF AMERICA

NUMERICAL INDEX

PART NUMBER	APPROX. WEIGHT IN POUNDS	PAGE
16 025 D		26
16 025 D		37
16 045 D		33
16 067 DA		12
16 067 DA		22
16 067 DA		33
16 077 DA		68
16 131 DA		62
17 564 D		53
17 564 D		55
17 565 DA	1/4	53
17 565 DA	1/4	55
17 700 D		156
17 700 D		159
17 829 DA		174
17 829 DA		175
17 829 DA		177
17 829 DA		178
17 829 DA		179
17 829 DA		180
17 829 DA		182
17 829 DA		183
18 369 D		101
18 369 D		122
18 370 DX		100
18 370 DX		122
18 377 D		48
18 585 DA		148
18 585 DA		150
18 585 DA		155
18 585 DA		158
18 767 D		223
18 767 D		240
18 942 D		172
19 589 DBY	12 1/4	189
20 117 DA	1 1/4	222
20 117 DA	1 1/4	225
20 289 D	1/8	62
20 289 D	1/8	64
20 289 D	1/8	65
20 290 D	1/4	62
20 290 D	1/2	64
20 290 D	1/4	65
20 293 D	1 3/4	62
20 293 D	1 3/4	64
20 293 D	1 3/4	66
20 296 D	1/4	62
20 296 D	1/8	64
20 296 D	1/4	66
20 299 D	1/8	62
20 299 D	1 3/4	64
20 299 D	1/8	66
20 300 D		62
20 300 D		64
20 300 D		65
20 301 D	1/8	63
20 301 D	1/8	64
20 301 D	1/8	66
20 303 D	1/8	65
20 303 DA	1/8	63
20 303 DA	1/8	64
20 306 DX	1	62
20 306 DX	1	64
20 306 DX	1	66
20 510 D	2 1/2	62
20 585 D	1/4	63
20 585 D	1/4	64
20 585 D	1/4	66
20 586 D	1/8	31
20 586 D	1/8	40
20 586 D	1/8	63
20 586 D	1/8	64
20 586 D	1/8	66

NUMERICAL INDEX

PART NUMBER	APPROX. WEIGHT IN POUNDS	PAGE
20 841 D		161
20 841 D		162
21 314 D		83
21 314 DX	1/4	82
21 314 DX	1/4	107
21 350 DXA		82
21 350 DXA		107
21 362 D		70
21 362 D		104
21 362 D		234
21 372 D	1/8	98
21 372 D	1/8	100
21 372 D	1/8	134
21 372 D	1/8	140
21 394 D		82
21 394 D		106
21 394 D		107
21 409 DB		82
21 409 DB		108
21 632 D		47
21 727 DAY		187
21 839 DB		62
21 839 DB		64
21 839 DB		66
22 383 D	1/4	67
22 383 D	1/4	68
22 507 D	1/8	57
22 507 D	1/8	59
22 508 D		57
22 508 D		59
22 509 D		57
22 509 D		59
22 510 D	1/8	57
22 510 D	1/8	59
22 977 DA		191
22 977 DA		194
23 086 D		234
23 516 D		47
23 521 D		47
23 527 D		47
23 528 D		47
23 530 D		47
23 537 D		47
23 539 D		47
23 541 D		47
23 977 DB		52
23 977 DB		54
23 995 DC	1/8	52
23 995 DC	1/8	54
24 017 D	1/8	63
24 017 D	1/8	64
24 017 D	1/8	65
24 473 DA	1/8	79
24 473 DA	1/8	104
24 523 D		79
24 523 D		82
24 524 D		15
24 524 D		47
24 564 DA		11
24 603 D		83
24 603 D		108
24 610 D		108
24 685 D		48
24 687 DA		48
24 689 D		48
24 693 D		48
24 703 DA		48
24 805 D		48
24 805 D		61
25 079 D		167
25 079 D		192
25 086 DA		13
25 086 DA		25

NUMERICAL INDEX

PART NUMBER	APPROX. WEIGHT IN POUNDS	PAGE
25 086 DA		36
25 093 DA		14
25 122 D		41
25 484 D		48
25 589 D		47
25 948 D		48
25 948 D		50
25 969 DB	3 1/2	49
26 032 D		142
26 036 D		142
26 039 DA	1/8	144
26 097 D		47
26 242 D		54
26 248 D		233
26 249 D		233
26 250 D		234
26 251 D	1/8	233
26 256 D		234
26 257 D		233
26 259 D	1/8	234
26 407 D		48
27 159 DB	1	207
27 311 D		83
27 311 D		108
28 422 D		162
28 755 D		142
28 781 D		72
28 797 D	1/8	25
28 797 D	1/8	36
28 824 D		47
28 825 D		47
28 899 DB	1/4	52
28 899 DB	1/4	54
28 950 D		13
28 950 D		70
29 070 D		13
29 302 DX50		48
29 547 D		156
29 547 D		159
29 710 D	1/8	15
29 780 D		142
29 780 D		144
29 802 DB	5 1/2	189
29 804 DB		187
29 898 D	1/8	52
29 898 D	1/8	55
29 898 D	1/8	57
29 898 D	1/8	59
29 898 D	1/8	76
29 898 D	1/8	211
29 898 D	1/8	213
29 898 D	1/8	215
29 898 D	1/8	232
29 899 D		47
29 899 D		52
29 899 D		53
29 899 D		54
29 899 D		55
29 901 D	1/8	57
29 901 D	1/8	59
29 901 D	1/8	76
29 901 D	1/8	211
29 901 D	1/8	213
29 901 D	1/8	215
29 902 DX		48
29 902 DX		50
30 114 D		108
30 402 D		213
30 402 D		215
31 180 D		234
31 238 D	3	144
31 242 DA	1/4	142
31 242 DA	1/4	144

- 247 -

NUMERICAL INDEX

PART NUMBER	APPROX. WEIGHT IN POUNDS	PAGE
31 279 D		73
31 281 D		73
31 283 D	3/8	73
31 284 D	1/8	73
31 285 D		73
31 378 D		73
31 636 D		49
31 729 D	1/4	26
31 729 D	1/4	37
31 790 DA	3/8	20
31 790 DA	3/8	45
32 032 DXA		82
32 032 DXA		107
32 445 D		23
32 445 D		34
32 445 D		197
32 445 D		200
32 454 D	1/8	171
32 454 D	1/8	189
32 454 D	1/8	192
32 454 D	1/8	194
32 576 DX		50
32 577 D		50
32 578 D		50
32 581 DXB	1/8	50
32 582 D		50
32 586 D		50
32 587 D		50
32 588 D		50
32 604 D		50
32 606 DB		50
32 615 D		48
32 888 D		191
33 794 D		18
33 817 DE	5 1/2	39
35 089 DA		174
35 089 DA		177
35 089 DA		179
35 606 D53		48
35 606 D54		48
35 691 DA		50
36 350 D		47
36 351 D		47
36 796 DA	1/8	18
36 796 DA	1/8	39
36 947 D	1/4	231
37 006 D		50
37 148 D		60
37 165 D		12
37 165 D		52
37 165 D		53
37 165 D		57
37 165 D		59
37 165 D		69
37 165 D		213
37 167 DX		52
37 219 D		30
37 290 D	1/8	174
37 290 D	1/8	175
37 290 D	1/8	177
37 290 D	1/8	178
37 290 D	1/8	179
37 290 D	1/8	180
37 290 D	1/8	182
37 290 D	1/8	183
37 290 D	1/8	231
37 323 D	1/8	53
37 323 D	1/8	55
37 323 D	1/8	57
37 323 D	1/8	59
37 323 D	1/8	68
37 323 D	1/8	69
37 323 DX	1/8	52

NUMERICAL INDEX

PART NUMBER	APPROX. WEIGHT IN POUNDS	PAGE
37 574 D		234
37 599 D	1 1/4	233
38 026 DM		53
38 026 DM		55
38 026 DM		57
38 026 DM		59
38 514 D		142
38 525 D		48
38 525 D		50
38 609 DA		82
38 609 DA		107
38 609 DA		108
39 122 D		38
39 397 D		42
39 422 D		26
39 659 D		231
39 677 DA	1/4	77
40 631 D		231
40 635 D		231
40 638 D		231
40 641 D	1/8	231
40 642 D		231
40 646 D	1/8	231
40 657 D		230
40 703 D		231
40 713 D		231
41 339 D		12
41 339 D		22
41 349 D		12
41 431 D	3/8	174
41 431 D	3/8	177
41 431 D	3/8	179
41 445 D	1	180
41 445 D	1	181
41 509 B		162
41 519 D		161
41 519 D		162
41 597 DA	1/8	141
41 597 DA	1/8	143
41 597 DA	1/8	164
41 597 DA	1/8	165
41 600 D		148
41 600 D		150
41 633 D	1/8	156
41 633 D	1/8	159
41 633 D	1/8	233
41 842 D	3/8	152
41 842 D	3/8	154
41 842 D	3/8	182
42 175 D		164
42 175 D		165
42 231 DX	17 3/4	142
42 236 D	2 3/8	141
42 298 DB	1/8	168
42 298 DB	3/8	169
42 384 DXA		52
42 384 DXA		54
42 385 D	1/8	52
42 385 D	1/8	55
42 733 DB		25
42 733 DB		36
42 739 DA		22
42 739 DA		29
42 739 DA		33
42 739 DA		41
42 877 DB		217
42 915 D		95
42 915 D		98
42 915 D		100
42 915 D		128
42 915 D		131
42 915 D		134
42 915 D		137

NUMERICAL INDEX

PART NUMBER	APPROX. WEIGHT IN POUNDS	PAGE
42 915 D		140
43 041 DA		94
43 041 DA		99
43 041 DA		101
43 041 DA		122
43 041 DA		136
43 041 DA		139
43 207 D	1/8	142
43 207 D	1/8	144
43 249 D		15
43 374 D		12
43 375 D		12
43 417 D	2	71
43 418 DA		71
43 664 DC	1/4	161
43 664 DC	3/8	162
43 715 D		19
43 728 D	1 1/4	168
43 729 DB	3/4	168
43 753 D		19
43 813 D	1/8	192
43 819 DA	3/4	192
43 832 D	1/8	17
43 832 D	1/8	28
43 832 D	1/8	39
43 841 D	1/8	192
43 846 D		192
45 003 D		79
45 003 D		104
45 052 D		73
45 110 D		47
45 110 D		49
45 120 D	1/8	148
45 120 D	1/8	150
45 124 DA		191
45 125 DA		192
45 132 D		159
45 134 D	1/2	168
45 141 DA53		48
45 148 D		48
45 148 D		49
45 149 DA		48
45 149 DA		49
45 242 DX	1	175
45 242 DX	1	180
45 248 D		215
45 285 DA	1/8	73
45 293 D	1/8	151
45 293 D	1/8	154
45 293 D	1/8	172
45 293 D	1/8	179
45 293 D	1/8	195
45 294 DA		151
45 294 DA		154
45 297 D	1 3/4	151
45 298 DAXA	18	151
45 299 DAXA	29	151
45 299 DAXA	29	154
45 300 D	55	151
45 301 D	73	151
45 302 D	18	151
45 303 D	15	151
45 304 D	14	151
45 305 D	9	151
45 306 D	24	151
45 307 D	19	151
45 308 D	18	151
45 309 D	20	151
45 311 D		204
45 314 DC		14
45 348 DR	11 1/2	156
45 357 D	1/8	156
45 357 D	1/8	159

NUMERICAL INDEX

PART NUMBER	APPROX. WEIGHT IN POUNDS	PAGE
45 358 D		156
45 360 D	3/8	156
45 361 D		156
45 361 D		159
45 372 DAX	4 1/4	156
45 391 D		14
45 397 D		14
45 439 D		157
45 440 D		156
45 442 D		156
45 442 D		225
45 447 D		71
45 532 DA		221
45 532 DA		222
45 532 DA		224
45 532 DA		225
45 558 DA		221
45 599 DAXA		154
45 613 D		17
45 613 D		28
45 627 D		18
45 653 D		69
45 655 DA		69
45 656 DA		69
45 667 D		70
45 685 D		70
45 696 D		69
45 704 D		73
45 725 D		68
45 726 D	7/8	68
45 730 DA		67
45 739 D		27
45 748 DAR	1/4	27
45 775 D		70
45 791 D		145
45 794 D	1/8	145
45 798 DBX	10 3/4	174
45 800 DE	3 5/8	184
45 935 D		70
45 943 D		12
45 947 DBX		11
45 948 DB		11
45 949 D		11
45 950 DAX		11
45 952 DB		11
45 956 D		14
45 956 D		25
45 980 DA	9 1/8	63
45 980 DA	9 1/8	64
45 981 D		63
45 981 D		64
45 982 DX	1 1/4	65
45 982 DXA	1 5/8	63
45 982 DXA	1 5/8	64
45 984 D		62
45 984 D		64
45 984 D		65
45 985 D		62
45 986 D		62
45 986 D		64
45 986 D		65
45 993 D	3/8	62
45 993 D	3/8	64
45 993 D	3/8	65
45 994 D		171
45 995 D		171
45 996 D		171
45 997 D		171
45 998 D		171
45 999 D		171
46 023 D		161
46 023 D		163
46 025 DA		162

NUMERICAL INDEX

PART NUMBER	APPROX. WEIGHT IN POUNDS	PAGE
46 038 D		167
46 038 D		169
46 040 D		167
46 040 D		169
46 052 D		76
46 053 D		73
46 053 D		74
46 059 D		48
46 059 D		49
46 102 D		20
46 108 D		14
46 109 DA		73
46 117 D		13
46 121 D		13
46 125 DA		13
46 128 DB		13
46 129 D		14
46 129 D		37
46 131 DA		13
46 133 DX		14
46 134 D		14
46 135 D		14
46 136 D	7/8	14
46 136 D	7/8	26
46 136 D	7/8	37
46 137 D		14
46 137 D		26
46 137 D		37
46 153 D		73
46 157 D	1/8	73
46 161 D		73
46 162 D		73
46 163 DA		73
46 173 DC		20
46 181 DB		14
46 190 DC	1/8	226
46 198 D	1/8	23
46 200 D		23
46 200 D		34
46 202 D		19
46 202 D		29
46 203 DD	1/4	22
46 204 DD		22
46 205 DA	1/8	22
46 207 DA	1/8	22
46 208 D		22
46 208 D		33
46 209 D		22
46 209 D		33
46 211 D		22
46 211 D		33
46 218 D		22
46 220 D	1/8	22
46 221 DBX	1/2	22
46 221 DBX	1/2	33
46 222 DBX	1/2	22
46 222 DBX	1/2	33
46 223 DBX	3/8	22
46 223 DBX	1/2	33
46 224 DBX	3/8	22
46 224 DBX	1/2	33
46 225 DA		22
46 225 DA		33
46 227 D	1/8	25
46 227 D	1/8	187
46 240 DB		25
46 242 DA	3/8	25
46 246 D		26
46 246 D		38
46 250 D		25
46 250 D		36
46 253 D		25
46 254 DA		25

NUMERICAL INDEX

PART NUMBER	APPROX. WEIGHT IN POUNDS	PAGE
46 258 D		14
46 304 D	2 3/4	148
46 304 D	2 3/4	150
46 308 DBXB	4 1/2	52
46 308 DBXB	4 1/2	54
46 332 D		148
46 332 D		150
46 337 D	1/8	145
46 584 D	1/4	57
46 584 D	1/4	59
46 689 DE		71
46 696 DX	1/4	13
46 700 D		13
46 751 DA		194
46 758 DA	1/4	191
46 794 DA	1	195
46 795 D	1/8	195
46 799 DA		195
46 800 D	2 3/8	195
46 809 D		150
46 809 D		195
46 821 D	7/8	194
46 825 DB	1	170
46 826 D	1 3/4	170
46 831 D		170
46 839 DB	13	189
46 859 D	1 1/8	160
46 904 DR	1/8	159
46 905 DX	3 1/8	159
46 912 D	1/2	159
46 913 D		159
46 916 D		160
46 918 D		159
46 923 D		18
46 923 D		28
46 923 D		39
46 932 D		174
46 932 D		179
46 933 D	3	174
46 933 D	3	179
47 244 D		223
47 277 D		12
47 292 DX		83
47 293 DX		83
47 293 DY		83
47 293 DZ		83
47 309 D	1/8	218
47 310 DX	1/8	218
47 322 DX	4 1/4	219
47 334 D		174
47 334 D		177
47 334 D		179
47 336 DB	2	217
47 388 DA		48
47 390 D		48
47 391 D		47
47 392 D		47
47 394 D		48
47 395 D		48
47 398 DX		48
47 400 DAX		48
47 401 D		48
47 402 D		48
47 404 DA		48
47 407 D23		48
47 407 D27		48
47 408 D		82
47 408 D		107
47 413 DXC	3/8	82
47 413 DXC	3/8	107
47 413 DYC		82
47 413 DYC		107
47 417 DX		82
47 417 DX		107
47 424 D		82
47 424 D		107
47 425 DX		82
47 425 DY		82
47 425 DY		107
47 427 D		82
47 427 D		107
47 428 D		82
47 428 DA		107
47 432 D		82
47 432 D		107
47 433 DX		82
47 433 DX		107
47 438 DA		82
47 439 DAX		82
47 442 D		82
47 449 DAY	1/2	82
47 449 DAY	1/2	107
47 452 D		82
47 452 D		107
47 453 D	3/8	82
47 453 D	3/8	107
47 454 D		82
47 454 D		107
47 455 DAR		83
47 461 D		83
47 462 D		83
47 468 DA		83
47 468 DA		108
47 470 D		83
47 470 D		108
47 473 D		83
47 474 D		83
47 474 D		108
47 475 D		83
47 496 DB		17
47 530 D	1/4	218
47 558 D	5 3/4	177
47 594 DA	3/4	152
47 594 DA	3/4	154
47 598 DAXA	28 1/4	152
47 599 DAXA		152
47 602 D	23	152
47 603 D		152
47 604 D	16	152
47 605 D	17	152
47 607 D	31	152
47 608 D	26	152
47 609 D	25	152
47 610 D	25	152
47 628 D		39
47 640 DR	1/8	39
47 726 D		167
47 726 D		169
47 771 D	2	204
47 772 D	1/8	204
47 773 D	38	204
47 775 D	1 1/8	204
47 776 D	3	204
47 778 D		172
47 779 D		172
47 780 D		172
47 822 D		83
47 822 D		108
47 874 DD	7	17
47 874 DD	7	28
47 877 D	1/4	64
47 877 D	1/4	110
47 877 D	1/4	112
47 933 DXA	3/8	36
47 955 D		65
47 978 D	4	146

NUMERICAL INDEX

PART NUMBER	APPROX. WEIGHT IN POUNDS	PAGE
47 979 D	2 3/4	146
47 981 DA	1/2	36
47 990 D	1/8	146
47 991 D	1/8	146
48 040 DB	8	184
48 042 DB	1 1/2	65
48 044 D	6	150
48 045 D	1 1/8	161
48 051 DA	1/8	34
48 053 DE	1/2	33
48 054 DE		33
48 057 D		33
48 058 D	1/2	33
48 061 D	1/8	33
48 072 D	2 1/4	148
48 072 D	2 1/4	150
48 073 D		148
48 073 D		150
48 074 D	1/4	146
48 142 D	1	36
48 143 DC	1/4	36
48 159 D	1	68
48 160 D	1 1/4	68
48 164 DA	1/4	67
48 196 DBX		15
48 227 D		70
48 229 D		177
48 232 D		53
48 232 D		55
48 233 D	1/8	53
48 233 D	1/8	55
48 236 DXA	3/8	25
48 250 D		70
48 253 DA		70
48 254 D		70
48 255 DA		69
48 256 DA		70
48 256 DAXB		70
48 311 D	1/8	41
48 339 D		82
48 339 D		108
48 340 DA		83
48 341 D		82
48 342 DA		83
48 384 D		15
48 384 D		26
48 384 D		38
48 385 D		15
48 385 D		26
48 385 D		38
48 388 DX	2 1/4	156
48 472 DA		82
48 489 D		69
48 492 D		69
48 493 D		69
48 496 DA		69
48 501 DA		69
48 512 D		222
48 512 D		224
48 514 D		222
48 514 D		224
48 521 D	1/8	221
48 522 D		221
48 523 D		221
48 524 D		221
48 526 D		221
48 739 DX	4 1/4	219
48 764 DA	7/8	217
48 819 D		79
48 830 DA		14
48 839 DX		69
48 906 D		222
48 906 D		225

- 251 -

NUMERICAL INDEX

PART NUMBER	APPROX. WEIGHT IN POUNDS	PAGE
48 957 DE		12
48 958 D		12
48 959 DA		12
49 023 DA		13
49 025 DX		13
49 028 DAX		13
49 029 DB		13
49 045 DA	1/2	20
49 046 DX		19
49 094 DD	6 1/8	107
49 094 DD	2 3/4	130
49 094 DD	6 1/8	133
49 094 DD	2 3/4	139
49 105 D	1/8	221
49 105 D	1/8	225
49 107 D		70
49 108 DA	1/8	70
49 178 DA	1/8	221
49 223 DA		47
49 246 DX		73
49 341 D	1/8	110
49 341 D	1/8	111
49 416 DX		82
49 416 DX		107
49 417 D		82
49 417 D		107
49 418 D		82
49 418 D		107
49 419 D		82
49 419 D		107
49 420 DX		82
49 420 DX		107
49 423 D		82
49 423 D		107
49 424 D		82
49 424 D		107
49 442 D		47
49 451 DA		234
49 466 DB	15	189
49 467 DB	16 1/2	189
49 468 DB	17 3/4	189
49 469 DB	20	189
49 471 DC		188
49 472 DC	15	188
49 473 DC	18	188
49 474 DC	18	188
49 475 DC	21	188
49 477 DB		189
49 478 DB	1080	189
49 479 DB	1170	189
49 480 DB	1255	189
49 481 DB	1430	189
49 483 DC		188
49 484 DC	250	188
49 485 DC		188
49 486 DC		188
49 487 DC		188
49 502 D	1/8	111
49 528 DA		70
49 538 D		221
49 541 DA		222
49 541 DA		224
49 542 D	1/4	221
49 543 D		221
49 544 D		221
49 545 D	1/2	221
49 546 D	3/8	221
49 547 DA		222
49 548 D	1 1/4	222
49 548 D	1 1/4	225
49 586 DAX	10 1/2	177
49 587 D	1/4	146
49 593 D		82

PRINTED IN UNITED STATES OF AMERICA

NUMERICAL INDEX

PART NUMBER	APPROX. WEIGHT IN POUNDS	PAGE
49 593 D		107
49 702 DA		220
49 703 DA	11	220
49 788 DXA		69
49 798 D74		48
49 862 DA	1/4	151
49 862 DA	1/4	154
49 950 D		22
49 950 D		33
49 952 D	1/8	37
50 134 D		68
50 149 D		52
50 187 D		47
50 309 DC	1/4	103
50 311 DB	15	189
50 312 DC		188
50 313 DB		189
50 314 DC		188
50 410 DA	1/4	14
50 410 DA	1/4	23
50 410 DA	1/4	26
50 410 DA	1/4	34
50 410 DA	1/4	37
50 410 DA	1/4	61
50 410 DA	1/4	76
50 410 DA	1/4	201
50 411 D		25
50 411 D		36
50 413 D		144
50 417 D		211
50 417 D		213
50 417 D		215
50 430 D		144
50 433 D	13 3/4	144
50 496 D		13
50 500 DAX	1/4	52
50 607 D	1/8	57
50 705 D		29
50 705 D		41
50 761 DA	3/8	218
50 762 DA	1/4	218
50 763 DA	1/8	218
50 765 DX	3/8	218
50 790 D		62
50 790 D		64
50 790 D		65
50 826 D	1/8	25
50 826 D	1/8	36
50 826 D	1/8	156
50 826 D	1/8	159
50 826 D	1/8	234
50 827 D		36
50 827 DA		25
50 948 DA	3/8	26
50 948 DA	5/8	37
50 950 DA	16 1/4	37
50 951 D	1/2	36
50 975 D		13
51 001 D	1/4	104
51 044 DA		74
51 046 D	5/8	74
51 047 D	5/8	74
51 066 DCX	3/8	53
51 066 DCX	3/8	55
51 068 D		31
51 068 D		40
51 145 DAX	7 1/2	33
51 169 D	2 1/2	22
51 169 D	2 1/2	33
51 170 D		22
51 170 D		33
51 171 DX	1 5/8	33
51 172 D	3/8	33

NUMERICAL INDEX

PART NUMBER	APPROX. WEIGHT IN POUNDS	PAGE
51 194 DA		33
51 195 D	1/8	23
51 195 D	1/8	34
51 197 D		33
51 203 DA	5/8	37
51 205 D	1/8	72
51 208 DX		69
51 227 D	1/8	141
51 227 D	1/8	143
51 268 D	1/8	223
51 269 D		223
51 271 D	1/8	223
51 303 D		83
51 304 D		83
51 305 DAR	1/4	37
51 306 DAR	1/4	37
51 307 DAR	1/4	37
51 311 D	1 1/2	37
51 312 D		37
51 316 DB		25
51 316 DB		36
51 318 D		75
51 324 D	1	25
51 324 D	1	36
51 325 D	3/8	37
51 336 DBX	28	36
51 365 DAXA	20	191
51 369 DA	19 1/2	192
51 370 DBX		191
51 373 D	2	191
51 377 D		191
51 378 D		191
51 388 D	2	204
51 389 D	5/8	204
51 394 D		145
51 395 D	2	145
51 396 D	7 3/4	145
51 401 D	4 1/2	148
51 430 DX	1/8	168
51 431 DX	1/4	168
51 433 D		168
51 434 D	1/8	55
51 434 D	1/8	59
51 488 DD		168
51 510 D		211
51 510 D		213
51 510 D		215
51 511 DA	1/2	231
51 527 DC		61
51 529 D	1/4	34
51 530 DAXA		40
51 547 D	12	206
51 579 D		20
51 579 D		238
51 594 DA	7	206
51 658 D	1/4	226
51 666 D		82
51 666 D		107
51 667 D		82
51 667 D		107
51 668 DB	1/4	41
51 671 DX	1/2	41
51 672 D	1/8	41
51 673 D	1/4	41
51 732 D		50
51 735 D		50
51 744 D	3/4	218
51 745 D	1/8	218
51 790 D	1/8	25
51 790 D	1/8	36
51 933 D		52
51 939 D		45
51 949 D	15	204

NUMERICAL INDEX

PART NUMBER	APPROX. WEIGHT IN POUNDS	PAGE
51 951 D	3 1/4	20
51 954 D		157
51 962 DA	7	157
51 965 DA	4 3/4	156
51 966 DA	6	156
51 968 DA	8 1/2	157
51 969 DA	10	157
51 971 D	1/8	26
51 972 DAR	1/4	26
51 973 DAR	1/4	26
51 974 DAR	1/4	26
51 979 DAXA	1 3/8	26
51 980 D		26
52 000 DXB	18	74
52 001 D		74
52 009 DA	20	26
52 012 D	1/8	22
52 016 DX	1 1/8	22
52 017 D		22
52 018 DAX	7 1/2	22
52 019 D		22
52 026 DB	1 1/2	76
52 027 DB	1 1/2	74
52 027 DB	1 1/2	76
52 028 DAX	1/2	74
52 069 D	1/2	26
52 139 D		22
52 163 DB	19 5/8	25
52 164 DAX	5/8	27
52 165 DAX	1/2	27
52 173 D		40
52 176 DC	1/4	31
52 176 DC	1/4	40
52 205 D	23	204
52 208 D	1 3/4	160
52 209 DB	30	194
52 210 DAXA	38	194
52 211 D	6 3/8	159
52 213 DA	15	160
52 215 DA	10	160
52 222 D	2	194
52 225 D	4 1/2	194
52 226 DA	1/4	194
52 229 DA	27	194
52 231 D	4	194
52 237 DAX	7 1/2	159
52 239 D		170
52 242 DC	95	170
52 243 DAX	3	169
52 244 DX	1/2	169
52 256 D	1/8	150
52 303 DB	62	220
52 304 DA	1 1/4	219
52 306 DB	81	216
52 312 DB		216
52 520 DB		29
52 520 DB		41
52 520 DB		134
52 520 DB		140
52 605 D	1/8	26
52 605 D	1/4	37
52 620 D	3/8	40
52 621 DX	3/8	31
52 621 DX	3/8	40
52 622 D	1/8	31
52 623 D		31
52 623 D		40
52 624 D		31
52 624 D		40
52 625 D		31
52 626 DA	1/4	31
52 626 DA	1/4	40
52 628 D	1/2	234

NUMERICAL INDEX

PART NUMBER	APPROX. WEIGHT IN POUNDS	PAGE
52 649 D		29
52 650 DC		29
52 653 D		29
52 654 D	1/4	29
52 745 D	1/4	23
52 748 D		31
52 756 D		20
52 806 DXA	1/4	73
52 808 D		73
52 836 DX	1/2	29
53 083 D	1/8	29
53 083 D	1/8	41
53 187 D	3/8	231
53 198 D		231
53 199 D	1/8	231
53 200 D		231
53 201 D		231
53 202 D	1/4	231
53 203 D		231
53 205 D	3/8	231
53 206 D	1 1/4	231
53 207 D	1 1/8	231
53 208 D	5 1/8	231
53 209 D	8 1/8	231
53 210 DA	2 1/4	231
53 251 D		221
53 252 D	7 1/2	221
53 253 D		221
53 255 D	6 1/2	221
53 256 D		221
53 257 DAX	7 1/4	222
53 258 D	1 3/4	221
53 259 DA	24	222
53 298 D	1/2	157
53 335 D		174
53 335 D		179
53 339 D		175
53 339 D		180
53 349 D		175
53 349 D		180
53 350 DB	6 1/2	175
53 350 DB	6 1/2	180
53 359 D	3/4	177
53 359 D	3/4	182
53 360 D		183
53 362 D	1/2	183
53 369 D	1/8	177
53 369 D	1/8	182
53 369 D	1/8	183
53 370 DB		177
53 370 DB		182
53 372 DX	5/8	177
53 372 DX	5/8	182
53 378 DC	5 1/4	184
53 398 DA	7 1/4	184
53 400 DX	3/4	183
53 422 DA		15
53 423 DB		15
53 424 DA		15
53 424 DA		26
53 436 DE		23
53 459 DA		49
53 461 D		156
53 470 DA	1 3/8	156
53 471 DA	1 3/8	156
53 480 DA	1 1/2	159
53 481 DA	1 1/2	159
53 486 D	1 1/8	159
53 490 D		162
53 494 D	6 1/2	143
53 495 D	1/2	161
53 495 D	1/2	162
53 497 D		161

NUMERICAL INDEX

PART NUMBER	APPROX. WEIGHT IN POUNDS	PAGE
53 497 D		162
53 503 DA	2	161
53 503 DA	2	162
53 504 DA	1 7/8	161
53 504 DA	1 7/8	162
53 505 D	3/8	161
53 514 DA	1/4	162
53 514 DA	1/4	163
53 526 D		100
53 526 D		122
53 529 D	1	192
53 532 D	1	192
53 535 D	2	191
53 536 DAX	7 1/2	192
53 537 DA	2 3/8	194
53 538 DA	1 3/4	195
53 539 DBX	10 1/2	195
53 554 D	2	192
53 555 D	3	191
53 556 D	3 5/8	20
53 556 D	3 5/8	238
53 559 D	3/4	148
53 559 D	3/4	150
53 597 D	1/8	167
53 597 D	1/8	169
53 604 DX		156
53 609 D		157
53 610 D		157
53 611 D		157
53 627 D		195
53 632 DX	1/4	159
53 635 D		160
53 636 D		160
53 637 D		160
53 646 D		171
53 656 D		172
53 674 D		73
53 683 DA		159
53 685 DA		156
53 687 DB	11	186
53 688 DB	13 5/8	186
53 689 DB	16	186
53 690 DB	16 1/2	186
53 693 DB	695	186
53 694 DB	895	186
53 695 DB	995	186
53 696 DB		186
53 699 DC	10	187
53 700 DC	14	187
53 701 DC	16	187
53 702 DC	17	187
53 705 DC		187
53 706 DC		187
53 707 DC		187
53 708 DC		187
53 711 D		148
53 714 D		148
53 714 D		150
53 715 D		150
53 740 DAX	15	73
53 803 D	1/8	191
53 804 D		191
53 804 D		192
53 805 D	3/8	191
53 808 D		191
53 812 D		191
53 814 D		223
53 816 DB	20	223
53 816 DB	20	238
53 826 DA	15	223
53 826 DA	15	239
53 834 DAX		73
53 872 D		14

- 254 -

NUMERICAL INDEX

PART NUMBER	APPROX. WEIGHT IN POUNDS	PAGE
53 877 DA		69
53 896 D	155	152
53 897 D	110	152
53 898 DA	2 5/8	152
53 898 DA	2 5/8	153
53 914 DC		47
53 915 DA	58 1/2	204
53 918 D	3/4	204
53 919 D	22 3/8	204
53 920 D	1 1/2	204
53 921 DA	89	204
53 924 D	1 1/4	204
53 925 D	2	204
53 939 D	7/8	218
53 942 D	11 7/8	220
53 943 D	11 1/2	220
53 949 D	1/8	219
53 952 DA	80	220
53 953 D	1/2	52
53 953 D	1/2	55
53 962 DA	27	222
53 966 DAX	1 1/4	222
53 967 D	1/4	222
53 968 D	1/8	222
53 968 D	1/8	225
53 970 D	5/8	221
54 003 D		194
54 004 D		194
54 006 D		194
54 007 D	1/8	194
54 007 D	1/8	195
54 008 D		194
54 009 D		194
54 010 D	1 1/8	194
54 011 D		194
54 012 D	1	194
54 013 D	3/8	194
54 016 D	1/8	194
54 026 D	22	152
54 027 D	6	152
54 028 D	31 1/2	152
54 029 D	19	152
54 037 DA	85	216
54 038 DA		216
54 038 DA		240
54 040 D		44
54 082 D	3/4	46
54 088 D		69
54 207 DB	1/8	84
54 207 DB	1/8	97
54 207 DB	1/8	99
54 488 DAX		47
54 511 D	3 1/4	192
54 514 D	3 1/4	195
54 515 D	1 1/4	195
54 532 DA		73
54 610 DB	5 3/8	170
54 759 DA	3 1/4	168
54 867 D	1/8	85
54 969 D	1/8	142
54 969 D	1/8	144
54 969 D	1/8	168
54 969 D	1/8	170
55 015 D		82
55 015 D		107
55 228 DH	54	144
55 229 DBXA	3 1/4	144
55 232 DA	2	142
55 232 DA	2	144
55 310 DX	1/8	151
55 311 DX	1/4	152
55 311 DX	1/4	153
55 354 DA	1/8	40

PRINTED IN UNITED STATES OF AMERICA

NUMERICAL INDEX

PART NUMBER	APPROX. WEIGHT IN POUNDS	PAGE
55 371 DA	4 1/4	144
55 479 D		231
55 481 D	14 1/2	231
55 482 D	2 3/8	231
55 621 DE		235
55 670 D	1 1/2	168
55 687 DG		142
55 725 DCXA		142
55 741 D		142
55 745 D	2 3/4	170
55 780 DD		79
55 780 DD		103
55 780 DD		105
55 780 DD		134
55 782 D	1/4	191
55 783 D		191
55 799 D		30
55 911 DAX	6 1/2	223
55 954 D		167
55 954 D		169
55 955 D		167
55 955 D		169
55 956 DC	8	167
55 959 DC	7 3/4	169
55 999 D		52
55 999 D		55
55 999 DX		52
56 066 DA		82
56 066 DA		107
56 104 D		31
56 107 D		29
56 107 D		41
56 108 D	1/2	73
56 127 D	3/4	218
56 132 D	5/8	218
56 174 D		40
56 391 DX	1/4	31
56 425 D		73
56 453 D		156
56 507 D		98
56 507 D		100
56 517 DX		83
56 517 DX		84
56 517 DX		108
56 587 DX		40
56 698 D	1 1/4	223
56 998 DA		53
57 043 DA	32	62
57 052 D	1/4	226
57 062 DA		93
57 062 DA		95
57 062 DA		97
57 062 DA		99
57 062 DA		126
57 062 DA		128
57 062 DA		130
57 062 DA		133
57 062 DA		136
57 062 DA		139
57 179 DA	8 1/2	186
57 180 DA	9	186
57 182 DA	700	186
57 234 D	4 7/8	171
57 235 D	4	172
57 236 D		195
57 238 D	5/8	171
57 239 D	1	172
57 248 DB	13	186
57 249 DC	11	187
57 250 DB	747	186
57 251 DC		187
57 252 DB		141
57 255 D	1/4	221

NUMERICAL INDEX

PART NUMBER	APPROX. WEIGHT IN POUNDS	PAGE
57 305 D	4	236
57 314 D		83
57 314 D		108
57 382 D	1/4	148
57 382 D	1/4	150
57 383 D	1/2	148
57 383 D	1/2	150
57 515 DA	13	189
57 516 DA	12 5/8	189
57 517 D		187
57 525 D	65 1/2	192
57 525 D	65 1/2	238
57 525 D	65 1/2	239
57 526 D	19	189
57 535 DA		189
57 536 D		240
57 555 DB	22	75
57 613 DA		13
57 714 D		223
57 736 D		22
57 736 D		33
57 755 D		108
57 780 DD		140
57 926 DX	1/2	82
57 937 D		83
57 937 D		108
57 956 D		48
58 009 DA		207
58 064 DXA	4	224
58 065 D	1/2	224
58 068 D		225
58 069 D		224
58 072 D		225
58 073 DB	1 1/4	224
58 074 DBX	6 1/2	224
58 080 D		224
58 081 D	3/4	224
58 083 D	11 7/8	225
58 084 D	8 3/4	225
58 085 DA		225
58 086 DB	5	224
58 087 DB		225
58 090 DBX	6 1/8	224
58 101 D		207
58 103 D		207
58 837 D		50
58 840 DAX		50
58 843 DX	1/8	49
59 055 D	1/8	233
59 084 DA		47
59 310 D	1/8	164
59 310 D	1/8	165
59 311 D	1/2	161
59 311 D	1/2	163
59 311 D	1/2	164
59 311 D	1/2	166
59 312 D	1/2	164
59 312 D	1/2	166
59 313 D	1/2	164
59 313 D	1/2	166
59 314 D	1/8	164
59 314 D	1/8	166
59 315 D	1/8	164
59 315 D	1/8	166
59 317 DA	1 1/8	164
59 317 DA	1 1/8	166
59 321 D		46
59 322 D	3 1/2	46
59 334 D	1/8	233
59 421 D	2 1/2	46
59 422 D		46
59 466 DB		189
59 480 D	1/8	37

PART NUMBER	APPROX. WEIGHT IN POUNDS	PAGE
59 480 DA		26
59 481 DB		26
59 481 DB		37
59 482 D	1/8	26
59 482 D	1/8	37
59 484 D	1/8	26
59 484 D	1/8	37
59 486 DA	1/4	37
59 487 D	1/8	37
59 488 D	1	26
59 488 D	1/8	37
59 490 D	1/4	26
59 508 D	1/8	179
59 509 D		179
59 522 D	3/8	182
59 523 D	3/8	181
59 658 D		74
59 658 D		75
59 995 D		47
59 996 D		47
60 094 D		82
60 094 D		107
60 095 D		167
60 095 D		169
60 096 D	1/8	167
60 096 D	1/8	169
60 371 DD		179
60 374 DA	11 1/2	179
60 397 DA	24	73
60 476 DX	1/8	153
60 570 D		26
60 570 D		37
60 573 D	1/8	183
60 580 D		13
60 805 D	1/4	211
60 805 D	1/4	213
60 805 D	1/4	215
60 871 DA		61
60 877 D	3/4	61
60 878 DX	3/8	61
60 947 D		48
61 115 D		142
61 115 D		144
61 142 DM		50
61 209 DA		60
61 248 D	3/8	52
61 248 D	3/8	55
61 316 DA	1/8	34
61 316 DA	1/8	36
61 387 D		52
61 387 D		55
61 808 D	3/8	33
62 158 D	1 1/2	231
62 159 D	1 1/2	231
62 385 D	1/4	171
62 493 D		98
62 493 D		100
62 493 D		103
62 493 D		134
62 493 D		140
62 672 D		73
62 778 D		156
62 779 D		159
62 801 DC	1/8	83
62 801 DC	1/8	93
62 801 DC	1/8	94
62 801 DC	1/8	108
62 801 DC	1/8	126
62 801 DC	1/8	128
62 801 DC	1/8	136
62 801 DC	1/8	211
62 801 DC	1/8	213
62 801 DC	1/8	215

- 256 -

NUMERICAL INDEX

PART NUMBER	APPROX. WEIGHT IN POUNDS	PAGE
62 866 D		11
62 866 D		13
62 866 D		22
62 866 D		26
62 866 D		33
62 866 D		37
62 939 DB		57
62 939 DB		59
62 950 DAX	1/8	59
62 951 DAX	1/4	59
62 959 DCX		57
63 116 D		17
63 120 D		17
63 255 DA	14	160
63 256 DA	7	159
63 265 D	3/8	172
63 265 D	3/8	178
63 416 D		222
63 459 D		12
63 459 D		23
63 782 D	1/2	211
63 782 D	1/2	213
63 782 D	1/2	215
63 987 DA	2 1/8	182
63 996 DB		182
64 159 D		207
64 163 D	1/8	156
64 163 D	1/8	159
64 163 D	1/8	221
64 163 D	1/8	225
64 487 DA	9	194
64 488 DA	17 1/2	194
64 490 DC	100	194
64 536 DA		48
64 536 DA		50
64 604 D		156
64 604 D		159
64 889 D		12
64 932 D		50
64 976 D		192
64 987 D23		48
64 987 D27		48
65 064 DA		83
65 069 D	3/4	118
65 486 D	1/8	57
65 868 D	4 1/2	146
65 869 D	8	146
66 272 D		69
66 551 D	2	153
66 552 D	18 1/4	153
66 553 D	1/2	153
66 776 D		46
66 927 DX	2 1/2	62
66 927 DX	2 1/2	64
66 987 D		153
66 997 D	97	153
66 998 D	30	153
66 999 D	26	153
67 000 D	24	153
67 001 D	18	153
67 115 D	1/2	151
67 115 D	1/2	153
67 266 DX		48
67 574 DC	4	217
67 869 D	1/4	52
67 869 D	1/4	55
67 869 D	1/4	215
67 942 D		48
68 315 DA	10 1/2	65
68 415 D	1/2	226
69 398 D		83
69 398 D		108
69 464 DB		159

NUMERICAL INDEX

PART NUMBER	APPROX. WEIGHT IN POUNDS	PAGE
69 466 DA	1	159
69 474 DA		156
69 477 DA		156
E		
E4 212		83
E4A 305		83
E4A 305		108
E4A 324		82
E4A 324		107
E4A 372		83
E4A 372		108
E 1 416		227
E 1 416		228
E 1 820		227
E 1 820		228
E 2 022		227
E 2 022		228
E 2 426		227
E 2 426		228
E 2 628		227
E 2 628		228
E 3 032		227
E 3 032		228
E4 4 212		108
E 4 216		82
E 4 216		107
E 4 226		82
E 4 226		107
E 4 295		82
E 4 295		107
G		
G 1 245		29
G 1 988		41
G 3 754		223
G 3 792	1/4	63
G 3 792	1/4	66
G 9 210		207
H		
H 163		228
H 172		228
H 173		228
H 177		228
H 190		227
H 391		228
H 5 476		231
H 18 977		228
3 405 H		73
15 913 HA		233
21 407 H		141
21 407 H		143
24 847 H		47
24 847 HX		47
27 080 H		33
31 194 H		39
34 259 H		14
37 762 H		78
37 762 H		103
39 624 HA		47

NUMERICAL INDEX

PART NUMBER	APPROX. WEIGHT IN POUNDS	PAGE
46 883 H		209
54 909 H		29
54 909 H		41
54 909 H		42
64 022 H		83
64 022 H		84
64 022 H		108
89 863 H		211
89 863 H		213
89 863 H		215
90 426 H		112
93 082 H		19
113 933 H		73
138 322 H		26
138 322 H		64
138 322 H		65
138 322 H		144
138 322 H		145
138 322 H		146
138 322 H		164
138 322 H		166
138 322 H		167
138 322 H		170
138 322 H		171
138 322 H		172
138 322 H		222
138 322 H		240
145 017 H		144
P		
PP 6		227
PP 6		228
PB 32		227
PB 43		228
Q		
Q 105		233
Q 1 504		206
Q 1 521		220
Q 1 537		31
Q 1 537		40
Q 1 597		13
Q 1 597		14
Q 1 597		19
Q 3 657		18
R		
49 798 R72		48
52 791 R1		48
52 791 R1		49
85 063 R91		47
85 064 R91		47
85 066 R91		47
85 067 R1		47
85 864 R92		47
89 883 R1		102
89 883 R1		122
89 884 R1		102
89 884 R1		122
89 886 R91		102
89 886 R91		122

NUMERICAL INDEX

PART NUMBER	APPROX. WEIGHT IN POUNDS	PAGE
96 189 R1		142
108 493 R1		198
133 093 R1		11
133 093 R1		22
133 093 R1		33
250 164 R1		207
250 263 R1		144
250 307 R1		160
250 308 R1		157
250 450 R1	1/8	34
250 451 R1		42
250 535 R1	1/4	22
250 535 R1	1/8	33
250 608 R1		60
250 610 R2	1/8	57
250 610 R2	1/8	59
250 617 R1	1/8	57
250 617 R1	1/8	59
250 914 R1	1/8	26
250 914 R1	1/8	37
251 021 R1		233
251 042 R4		60
251 044 R2		60
251 050 R2		57
251 050 R2		59
251 119 R1		61
251 226 R1		22
251 226 R1		33
251 226 R1		45
251 227 R91		22
251 227 R91		33
251 227 R91		45
251 348 R91		61
251 355 R91	1 3/8	61
251 380 R91	7/8	61
251 538 R1		80
251 538 R1		105
251 553 R1		78
251 553 R1		79
251 553 R1		82
251 553 R1		104
251 553 R1		107
251 555 R1		83
251 555 R1		108
251 583 R1		48
251 591 R1		83
251 591 R1		108
251 650 R11		50
251 652 R91		50
251 658 R1	7 7/8	37
251 674 R11		39
251 683 R3		39
251 684 R21	1/2	39
251 685 R21	1/2	39
251 780 R91		68
251 825 R2		52
251 825 R2		54
251 846 R1		211
251 846 R1		213
251 846 R1		215
252 011 R2	1/8	37
252 032 R3		36
252 172 R11	4 3/8	208
252 304 R1		153
252 536 R1		192
252 739 R1		80
252 739 R1		106
252 862 R1	1/8	26
252 862 R1	1/8	36
253 070 R1		197
253 070 R1		200
253 213 R11	7 1/2	27
253 215 R1	1/4	28

NUMERICAL INDEX

PART NUMBER	APPROX. WEIGHT IN POUNDS	PAGE
253 216 R1		28
253 584 R1		239
253 584 R1		240
253 621 R1		40
253 667 R1		61
254 260 R95		29
254 753 R1		62
254 753 R1		64
254 753 R1		65
254 794 R91		186
254 794 R91		238
254 794 R91		239
254 795 R91		186
254 796 R91		186
254 797 R91		187
254 799 R91	772	187
254 799 R91	772	238
254 799 R91	772	239
254 801 R94		238
254 801 R94		239
254 803 R91	1090	189
254 804 R91		189
254 806 R91	1463	189
254 807 R91		189
254 809 R94		240
254 817 R92		148
254 817 R92		150
254 920 R1	16 1/2	151
254 921 R1	29	152
254 921 R1	29	154
254 922 R1		152
254 922 R1		154
254 923 R1	1	152
254 923 R1	1	153
254 955 R2		27
254 956 R2		27
254 957 R2	1	39
254 958 R2	1 1/8	39
254 959 R11	2	168
254 960 R1	1/4	168
254 964 R1		166
254 967 R11	2 3/4	169
254 968 R1	1/2	169
254 970 R1		166
254 981 R91	1521	189
254 981 R91	1521	240
255 024 R1	3	187
255 025 R92	879	187
255 026 R92	1198	189
255 092 R21	1 1/2	74
255 302 R1	46	153
255 303 R1	47	153
255 316 R91	178	153
255 317 R1	3 1/2	153
255 327 R1	33	153
255 332 R91		153
255 630 R1	3/8	160
255 828 R11		213
255 876 R91	4 1/2	63
255 876 R91	4 1/2	64
255 876 R91	4 1/2	66
255 876 R91	4 1/2	211
255 876 R91	4 1/2	213
255 876 R91	4 1/2	215
255 876 R91	4 1/2	238
255 876 R91	4 1/2	239
255 876 R91	4 1/2	240
255 878 R91	808	186
255 878 R91	808	238
255 878 R91	808	239
255 879 R91	1023	189
255 879 R91	1023	240
256 020 R1		189

NUMERICAL INDEX

PART NUMBER	APPROX. WEIGHT IN POUNDS	PAGE
256 021 R1		187
256 048 R11	8 3/4	204
256 048 R11	8 3/4	225
256 051 R11	7 1/2	225
256 102 R93		22
256 103 R93	3 1/2	33
256 351 R91	2 1/2	66
256 351 R91	2 1/2	240
256 352 R91	2 3/4	63
256 352 R91	2 3/4	64
256 352 R91	2 3/4	238
256 352 R91	2 3/4	239
256 658 R1		25
256 658 R1		36
256 658 R1		37
256 659 R1		23
256 820 R1		26
256 820 R1		37
256 859 R1	4 3/4	26
256 860 R2	6 3/8	26
257 523 R1		213
257 523 R1		215
257 620 R1	1/8	164
257 620 R1	1/8	165
257 625 R1		164
257 625 R1		166
257 723 R91	1132	186
257 724 R92		187
257 724 R92		238
257 724 R92		239
257 725 R92		187
257 726 R92		187
257 727 R92		187
257 770 R91	1090	189
257 771 R91		189
257 772 R92		188
257 773 R92	250	188
257 773 R92	250	240
257 774 R92		188
257 775 R92		188
257 776 R92		188
257 777 R91	46	196
257 777 R91	46	240
257 778 R91		196
257 779 R91		196
257 785 R1	1/4	196
257 786 R1		196
257 789 R91	48	196
257 789 R91	48	238
257 789 R91	48	239
257 790 R92		196
257 791 R92		196
257 797 R1	1/4	196
257 798 R1		196
257 911 R91		84
258 222 R92	5/8	207
258 276 R2		168
258 277 R2	10	170
258 278 R1	1/8	167
258 278 R1	1/8	170
258 286 R3		171
258 287 R3		171
258 288 R3		171
258 289 R3		171
258 297 R3	65	172
258 298 R3	65	172
258 299 R3	78	172
258 300 R3	78	172
258 345 R92	1/4	31
258 370 R1		208
258 511 R91		26
258 511 R91		37
258 574 R91	8 1/2	222

NUMERICAL INDEX

PART NUMBER	APPROX. WEIGHT IN POUNDS	PAGE
258 623 R2		156
258 624 R2		156
258 625 R2	12 1/2	159
258 626 R3	2 1/8	159
258 634 R93	3/8	211
258 634 R93	3/8	213
258 634 R93	1/4	215
258 854 R1	1/8	33
258 869 R91		187
258 870 R91		187
258 870 R91		238
258 870 R91		239
258 871 R1	11	187
258 872 R91		189
258 873 R91		189
258 873 R91		240
258 874 R1	16 1/2	189
258 938 R93	1/8	103
258 995 R1	1/8	57
258 995 R1	1/8	213
259 402 R91		53
259 402 R91		55
259 403 R91		53
259 403 R91		55
259 479 R92	1	77
259 482 R91	1	77
259 688 R1	1/8	141
259 688 R1	1/8	143
259 689 R11	1/8	141
259 689 R11	1/8	144
259 689 R11	1/8	235
259 691 R1	1 5/8	157
259 896 R1		196
259 937 R11	5/8	52
259 937 R11	5/8	54
259 939 R91	1 3/4	52
259 939 R91	1 3/4	54
259 960 R91	5/8	28
259 963 R91	1/2	28
259 965 R91	1	39
259 968 R91	3/4	39
260 119 R1		26
260 119 R1		37
260 148 R1	7	157
260 151 R1	10 3/4	160
260 152 R11	10 1/4	160
260 153 R1	6 3/4	160
260 234 R2		72
260 612 R1		168
260 613 R1		169
260 623 R1	1	57
260 623 R1	1	59
260 692 R71	150	34
260 708 R2		61
260 718 R2	1 3/8	76
260 718 R21		74
260 728 R1		191
260 752 R93	7	39
260 870 R1		23
260 871 R1		23
260 872 R1		23
260 872 R1		30
260 878 R1	1/2	60
260 879 R4		60
260 889 R1	3	192
260 890 R2		192
260 891 R1		192
260 892 R2	6	195
260 893 R1	136 1/2	195
260 894 R1	177 1/8	195
260 938 R1	1/4	23
260 943 R2	1/8	34
261 106 R1		144

NUMERICAL INDEX

PART NUMBER	APPROX. WEIGHT IN POUNDS	PAGE
261 119 R91		25
261 120 R91	1/2	36
261 195 R1	38 3/4	37
261 199 R1	23	39
261 200 R2		37
261 201 R3		36
261 202 R1	1 1/4	104
261 203 R1		104
261 203 R1		197
261 203 R1		201
261 204 R31	8 7/8	36
261 206 R11	5 3/4	104
261 215 R12	1/8	26
261 217 R1	1 7/8	28
261 218 R3		25
261 219 R2		26
261 220 R1	2	104
261 221 R31	7 1/4	25
261 265 R41		28
261 267 R95		28
261 285 R1	1/2	26
261 285 R1	1/2	37
261 287 R1		192
261 288 R1		192
261 289 R1		195
261 290 R1		195
261 339 R92	2 1/4	23
261 339 R92	2 1/4	235
261 339 R92	2 1/4	236
261 340 R91	2 3/8	236
261 450 R1	24	189
261 452 R2	23	188
261 453 R2	24	188
261 454 R91		189
261 456 R92		188
261 457 R92	250	188
261 514 R92	1/4	62
261 514 R92	1/4	64
261 514 R92	1/4	65
261 590 R92	3/8	62
261 590 R92	3/8	64
261 590 R92	3/8	65
261 630 R1	3/8	72
261 650 R1		211
261 650 R1		212
261 650 R1		213
261 650 R1		214
261 650 R1		215
261 690 R11	3/8	211
261 690 R11	3/8	213
261 690 R11	3/8	215
261 750 R1	1/4	74
261 750 R1	1/4	75
261 805 R91	2	234
261 879 R1	1/8	234
261 965 R91	2 3/4	62
261 965 R91	2 3/4	64
261 987 R93	1/2	232
262 421 R1		232
262 456 R91	1/4	103
262 468 R92	1102	188
262 561 R11		31
262 563 R92		31
262 565 R92		40
262 607 R2	3/8	31
262 607 R2	3/8	40
262 630 R11	3/4	197
262 630 R11	3/4	200
262 631 R91	2 1/2	197
262 631 R91	2 1/2	201
262 632 R91	3	197
262 632 R91	3	200
262 633 R91	1 1/8	197

NUMERICAL INDEX

PART NUMBER	APPROX. WEIGHT IN POUNDS	PAGE
262 633 R91	1 1/8	200
262 638 R1	7	206
262 650 R1	1/4	195
262 651 R1	1/8	195
262 655 R1		206
262 704 R1		211
262 704 R1		213
262 704 R1		215
262 748 R2	4 1/2	157
262 749 R1	1/2	157
262 750 R1	1 5/8	157
262 751 R2	5 7/8	160
262 752 R1	1/4	160
262 787 R91		131
263 030 R91		29
263 031 R91		41
263 138 R11		39
263 140 R11		39
263 188 R91		39
263 195 R91		39
263 201 R11	5/8	27
263 205 R91	3/8	28
263 207 R11	3/4	27
263 211 R91	5/8	28
263 286 R92		226
263 289 R92	20	226
263 307 R2	4	197
263 307 R2	4	201
263 308 R91		126
263 308 R91		128
263 308 R91		130
263 308 R91		133
263 308 R91		136
263 308 R91		139
263 309 R13		29
263 310 R13	20	41
263 310 R13	20	128
263 311 R1	3/4	30
263 311 R1	7/8	42
263 311 R12	3/4	30
263 311 R12	7/8	42
263 311 R12	7/8	136
263 312 R1	3/4	29
263 312 R1	7/8	41
263 313 R1		103
263 314 R1		103
263 316 R93	1/4	41
263 318 R1		29
263 318 R1		41
263 324 R93		29
263 325 R2	1/8	30
263 325 R2	1/8	42
263 326 R1		30
263 326 R1		42
263 327 R1		30
263 327 R1		42
263 328 R1		30
263 328 R1		41
263 329 R1		30
263 329 R1		42
263 330 R1		30
263 330 R1		41
263 345 R92	3/4	30
263 345 R92	3/4	42
263 345 R92	3/4	130
263 345 R92	3/4	133
263 345 R92	3/4	139
263 356 R1		41
263 357 R1		30
263 357 R1		42
263 358 R1	1/8	30
263 358 R1	1/8	41
263 414 R21	1/4	183

NUMERICAL INDEX

PART NUMBER	APPROX. WEIGHT IN POUNDS	PAGE
263 415 R2	1/2	183
263 416 R1		183
263 417 R1		183
263 418 R11	16	184
263 419 R11	16	184
263 420 R91		184
263 420 R91		240
263 421 R11	127	183
263 422 R1	18 1/2	183
263 423 R1	18 1/2	184
263 424 R92	9 1/8	183
263 427 R1	5/8	183
263 429 R11	6 3/4	184
263 430 R11	8	184
263 431 R91	29 3/8	184
263 431 R91	29 1/2	238
263 431 R91	29 3/8	239
263 432 R11	174	184
263 434 R11	7/8	183
263 436 R1	29	183
263 437 R1	25	184
263 441 R1	25	183
263 514 R91		93
263 514 R91		95
263 514 R91		97
263 514 R91		99
263 514 R91		126
263 514 R91		128
263 514 R91		130
263 514 R91		131
263 514 R91		133
263 514 R91		134
263 514 R91		136
263 514 R91		137
263 514 R91		139
263 514 R91		140
263 514 R91		232
263 514 R92		93
263 514 R92		128
263 514 R92		133
263 515 R91		52
263 515 R91		93
263 515 R91		94
263 515 R91		97
263 515 R91		99
263 515 R91		126
263 515 R91		128
263 515 R91		130
263 515 R91		133
263 515 R91		136
263 515 R91		139
263 524 R92		84
263 561 R1		37
263 561 R2		26
263 681 R1		26
263 681 R1		37
263 692 R1		84
263 716 R91		97
263 716 R91		99
263 740 R91		131
263 740 R91		140
263 740 R91		239
263 782 R91		134
263 782 R91		140
263 782 R91		240
263 859 R91		98
263 859 R91		100
263 859 R91		238
263 937 R1	3 1/4	173
263 937 R1	3 1/4	179
263 938 R1	3 1/4	173
263 938 R1	3 1/4	179
263 939 R1	3 3/8	173

NUMERICAL INDEX

PART NUMBER	APPROX. WEIGHT IN POUNDS	PAGE
263 939 R1	3 3/8	179
263 940 R1	3 3/8	173
263 940 R1	3 3/8	179
263 941 R1	1 1/2	179
263 941 R2	1 5/8	173
263 942 R1	1 3/8	179
263 942 R2	1 3/8	173
263 943 R1	2 3/8	173
263 943 R1	2 3/8	179
263 944 R1	2 3/8	173
263 944 R1	2 3/8	179
263 945 R1		173
263 945 R1		179
263 945 R1		182
263 945 R1		192
263 945 R1		195
263 946 R91	333	173
263 952 R91	360	180
263 969 R1	4 1/2	173
263 969 R1	4 1/2	182
263 970 R1	4 1/2	173
263 970 R1	4 1/2	182
263 971 R1	4 1/2	173
263 971 R1	4 1/2	182
263 972 R1	3 1/2	173
263 972 R1	3 1/2	182
263 973 R2	3	173
263 973 R2	3	182
263 974 R2	2 1/8	173
263 974 R2	2 1/8	182
263 975 R1	3	173
263 975 R1	3	182
263 976 R1	3	173
263 976 R1	3	182
263 977 R91	467	173
263 982 R91		182
264 041 R1		27
264 042 R1		27
264 045 R1	1	39
264 046 R1	1 1/8	39
264 055 R2	1/4	156
264 055 R2	1/4	159
264 056 R1	1/2	74
264 057 R1		34
264 097 R2		211
264 097 R2		212
264 097 R2		213
264 097 R2		214
264 097 R2		215
264 097 R2		221
264 097 R2		225
264 123 R1		194
264 137 R92	8	20
264 137 R92	8	238
264 164 R91		93
264 164 R91		95
264 164 R91		126
264 164 R91		128
264 164 R91		130
264 164 R91		133
264 164 R91		136
264 164 R91		139
264 196 R91		93
264 196 R91		97
264 196 R91		99
264 256 R3		192
264 258 R1		192
264 259 R1	1/8	192
264 259 R1	1/8	195
264 261 R2	5	195
264 262 R1		195
264 263 R1		195
264 309 R91		211

NUMERICAL INDEX

PART NUMBER	APPROX. WEIGHT IN POUNDS	PAGE
264 309 R91		213
264 309 R91		215
264 320 R2	10	27
264 322 R1		27
264 323 R2	1/2	27
264 324 R2	1/2	27
264 325 R2	3/8	27
264 326 R3		27
264 332 R21	1/4	59
264 333 R21	1/4	59
264 338 R94	10	27
264 339 R94	8 1/2	27
264 340 R11	3/8	57
264 341 R21	1/4	57
264 362 R1	1/8	28
264 363 R1		26
264 370 R91	24	221
264 371 R91	24	221
264 377 R1	1/8	37
264 414 R92	2 7/8	27
264 475 R1		25
264 475 R1		37
264 530 R91		22
264 530 R91		34
264 531 R91		41
264 534 R91		26
264 534 R91		37
264 661 R31		26
264 661 R31		37
264 662 R2		26
264 662 R2		37
264 663 R91	1 5/8	26
264 663 R91	1 5/8	36
264 664 R1	7	26
264 665 R1	6	36
264 673 R93	1/2	232
264 674 R91	1/8	232
264 689 R1		54
264 723 R1	1/8	25
264 723 R1	1/8	37
264 815 R93	3 1/2	236
264 830 R21	2 1/8	163
265 043 R11		161
265 114 R91		235
265 116 R92		20
265 543 R1		72
265 544 R1		72
265 548 R91		234
265 549 R91	1/2	234
265 913 R91		30
265 913 R91		42
265 926 R91	3/4	26
265 926 R91	3/4	37
265 959 R1	9 1/2	192
265 960 R1	1/8	192
265 961 R1	1/4	192
265 965 R1		175
265 966 R1	1/8	171
265 968 R1		175
265 970 R1		184
265 971 R11	30	175
265 972 R11	30	175
266 059 R1	15 1/2	195
266 060 R1	3/8	195
266 064 R1	1/4	172
266 066 R1	1/8	177
266 067 R1	13 1/8	177
266 068 R1	3/4	184
266 069 R11	62	177
266 070 R11	60 1/2	177
266 071 R1	3/8	178
266 072 R1	3/8	178
266 079 R1		148

NUMERICAL INDEX

PART NUMBER	APPROX. WEIGHT IN POUNDS	PAGE
266 079 R1		150
266 237 R91		241
266 337 R91	1 1/2	52
266 337 R91	1 1/2	54
266 337 R91	1 1/2	238
266 337 R91	1 1/2	239
266 381 R12		91
266 383 R2	1/8	91
266 385 R92	5/8	93
266 385 R92	5/8	95
266 385 R92	5/8	97
266 385 R92	5/8	99
266 456 R1	3 3/8	141
266 457 R11	2 1/8	141
266 457 R11	2 1/8	143
266 458 R1		141
266 458 R1		143
266 459 R1	5	143
266 473 R91		229
266 600 R1	1/4	26
266 635 R91	1 5/8	26
266 635 R91	1 5/8	36
266 746 R2		67
266 747 R11	1 5/8	67
266 749 R1		67
266 767 R91		95
266 767 R91		99
266 767 R91		101
266 767 R91		121
266 767 R91		137
266 767 R91		140
266 768 R91		103
266 768 R91		126
266 768 R91		128
266 768 R91		130
266 768 R91		133
266 768 R91		139
266 778 R91		103
266 780 R91		103
266 783 R91	1/8	103
266 844 R22	7	123
266 850 R92		126
266 850 R92		128
266 850 R92		131
266 850 R92		134
266 850 R92		137
266 850 R92		140
266 854 R91	7/8	126
266 854 R91	7/8	128
266 854 R91	7/8	131
266 854 R91	7/8	134
266 854 R91	7/8	137
266 854 R91	7/8	140
266 855 R91	5/8	93
266 855 R91	5/8	95
266 855 R91	5/8	97
266 855 R91	5/8	99
266 855 R91	5/8	126
266 855 R91	5/8	128
266 855 R91	5/8	131
266 855 R91	5/8	134
266 855 R91	5/8	137
266 855 R91	5/8	140
266 955 R1	1/8	186
266 955 R1	1/8	187
267 019 R1	1/8	188
267 019 R1	1/8	189
267 138 R14		179
267 141 R1	5/8	180
267 259 R3		39
267 263 R91	12 3/8	39
267 265 R1	6 3/4	39
267 266 R91		39

NUMERICAL INDEX

PART NUMBER	APPROX. WEIGHT IN POUNDS	PAGE
267 665 R91		144
267 679 R91		142
267 679 R91		144
267 679 R91		235
267 680 R91		142
267 680 R91		144
267 680 R91		235
267 689 R1		142
267 689 R1		144
267 700 R1		72
267 737 R91		185
267 738 R11	28	185
267 739 R11	28	185
267 740 R11	34	185
267 741 R11	34	185
267 746 R1	5/8	185
267 747 R1	1 1/8	185
267 748 R91	178	185
267 748 R91	178	238
267 748 R91	178	239
267 749 R11	33	185
267 750 R11	34	185
267 751 R11	40	185
267 752 R11		185
267 787 R91		93
267 787 R91		95
267 787 R91		97
267 787 R91		99
267 787 R91		126
267 787 R91		128
267 787 R91		130
267 787 R91		133
267 787 R91		137
267 787 R91		140
267 788 R91		93
267 788 R91		95
267 788 R91		97
267 788 R91		99
267 788 R91		126
267 788 R91		128
267 788 R91		131
267 788 R91		134
267 788 R91		137
267 788 R91		139
267 808 R1	5/8	72
267 809 R1		72
267 810 R1		72
267 825 R91	1/4	232
267 826 R91	1/8	103
267 872 R91		185
267 873 R11	39	185
267 874 R11	38	185
267 875 R11	49	185
267 876 R11	49	185
267 881 R91	203	185
267 881 R91	203	240
267 882 R11	46	185
267 883 R11	45	185
267 884 R11	57 1/2	185
267 885 R11	56	185
267 887 R1	3/4	185
267 888 R1	1 3/8	185
267 917 R1	1/4	91
267 917 R1	1/4	123
267 963 R2	52	67
267 976 R1		91
267 994 R2	1/8	39
267 995 R1	1/8	39
267 996 R1	1/8	39
267 997 R1	1/8	39
268 103 R91	2 1/8	39
268 166 R1	1 3/4	60
268 314 R91		61

NUMERICAL INDEX

PART NUMBER	APPROX. WEIGHT IN POUNDS	PAGE
268 318 R91		61
268 500 R91	3/4	221
268 500 R91	3/4	224
268 613 R1		144
268 724 R1		161
268 725 R1		162
268 770 R2		25
268 770 R2		37
268 795 R91	3/8	67
268 996 R1		25
268 996 R1		37
269 135 R1		182
269 164 R1		163
269 177 R1	1/8	161
269 177 R1	1/8	162
269 178 R1		161
269 178 R1		162
269 292 R1		223
269 292 R1		240
269 293 R1		76
269 411 R91	14	183
269 453 R91		126
269 453 R91		128
269 453 R91		131
269 453 R91		134
269 453 R91		137
269 453 R91		140
269 455 R91		93
269 455 R91		95
269 455 R91		97
269 455 R91		99
269 467 R92	1/4	93
269 467 R92	1/4	95
269 467 R92	1/4	97
269 467 R92	1/4	99
269 467 R92	1/4	126
269 467 R92	1/4	128
269 467 R92	1/4	130
269 467 R92	1/4	133
269 467 R92	1/4	137
269 467 R92	1/4	139
269 467 R92	1/4	211
269 467 R92	1/4	213
269 467 R92	1/4	215
269 523 R1		225
269 524 R1		225
269 525 R1		225
269 533 R2	1 3/8	180
269 533 R2	1 1/2	181
269 540 R1	1 7/8	179
269 605 R92	1 3/8	39
269 611 R92	2	39
269 617 R92	1 1/2	39
269 620 R92		39
269 630 R91		225
269 630 R91		239
269 630 R91		240
269 632 R91	1/4	225
269 633 R91	1/4	225
269 634 R91		225
269 635 R91	1 5/8	225
269 636 R91		225
269 638 R31	691	148
269 639 R1	6 3/8	157
269 640 R11	6 1/4	157
269 976 R91		213
269 976 R91		215
270 020 R91		189
270 021 R91		57
270 023 R91		239
270 074 R91	60	59
270 075 R91		240
270 630 R91		88

NUMERICAL INDEX

PART NUMBER	APPROX. WEIGHT IN POUNDS	PAGE
270 630 R91		93
270 630 R91		95
270 630 R91		97
270 630 R91		99
270 691 R21		57
270 821 R91	1042	189
270 822 R91		189
270 823 R1	13 1/8	189
270 824 R1	14 1/2	189
271 077 R91	1/4	122
271 077 R91	1/4	126
271 077 R91	1/4	128
271 077 R91	1/4	130
271 077 R91	1/4	133
271 077 R91	1/4	136
271 077 R91	1/4	139
271 077 R91	1/4	211
271 077 R91	1/4	213
271 077 R91	1/4	215
271 080 R1		122
271 142 R21	1/8	57
271 153 R1		231
271 174 R91		133
271 179 R1		119
271 179 R1		128
271 179 R1		133
271 179 R1		136
271 179 R1		139
271 179 R1		211
271 179 R1		213
271 179 R1		215
271 179 R91		88
271 179 R91		93
271 179 R91		94
271 179 R91		97
271 179 R91		99
271 179 R91		126
271 179 R91		130
271 207 R92	1 1/8	29
271 213 R92		29
271 219 R92	1 1/8	29
271 222 R92		29
271 226 R91		213
271 226 R91		215
271 321 R2	11 3/8	77
271 406 R91	7/8	226
271 481 R1		42
271 513 R91		93
271 513 R91		97
271 513 R91		126
271 513 R91		130
271 513 R91		131
271 581 R91		220
271 585 R91	1/4	219
271 587 R91		122
271 588 R1	1/8	102
271 588 R1	1/8	122
271 589 R91		102
271 597 R91		22
271 597 R91		34
271 647 R1		148
271 647 R1		150
271 648 R91		60
271 664 R1	7/8	195
271 700 R1	4 7/8	36
271 701 R1	3 1/2	37
271 702 R1		25
271 702 R1		36
271 703 R91		36
271 740 R1		60
271 743 R1		60
271 753 R91		156
271 753 R91		167

NUMERICAL INDEX

PART NUMBER	APPROX. WEIGHT IN POUNDS	PAGE
271 754 R1		167
271 755 R1	14	167
271 757 R1	1 1/2	166
271 758 R2		166
271 759 R2		166
271 762 R1		166
271 763 R1		156
271 766 R91		157
271 768 R1		157
271 769 R1		156
271 772 R1		191
271 773 R1		191
271 774 R91	1 3/4	191
271 775 R1		191
271 776 R1	12 1/2	191
271 777 R2	4	166
271 778 R91	1 1/8	191
271 779 R1		191
271 780 R91	2 7/8	191
271 781 R91	50	191
271 786 R91		166
271 787 R1		166
271 792 R1		25
271 793 R1	3	26
271 794 R91		25
271 848 R1		34
271 848 R1		191
271 848 R1		194
271 853 R1	20	167
271 854 R1	4 1/2	166
271 855 R2		166
271 856 R2		166
271 857 R2		166
271 860 R1	6 1/2	160
271 861 R1	15	159
271 863 R91	14 1/4	160
272 061 R91		120
272 064 R91		90
272 064 R91		120
272 082 R1		90
272 082 R1		120
272 084 R1		90
272 084 R1		120
272 085 R1		90
272 085 R1		120
272 119 R91	3	166
272 120 R1	2 1/8	166
272 135 R11	138	183
272 136 R11	181	184
272 139 R91		184
272 139 R91		240
272 239 R92	4 1/2	208
272 245 R1		215
272 245 R91		213
272 288 R91		231
272 424 R1		57
272 424 R1		59
272 442 R11	1/8	59
272 458 R11	2 1/2	74
272 459 R1		74
272 460 R1	3 7/8	74
272 461 R11	3/8	74
272 462 R1		74
272 465 R91	18 1/4	72
272 466 R91	2 1/4	72
272 467 R11	1 1/4	72
272 468 R91	1/2	72
272 469 R11	15	72
272 472 R1		72
272 473 R1		72
272 477 R91	1/8	156
272 478 R91		159
272 479 R91		157

NUMERICAL INDEX

PART NUMBER	APPROX. WEIGHT IN POUNDS	PAGE
272 480 R91		160
272 503 R21		25
272 505 R92		25
272 506 R91	8 3/4	74
272 508 R91	22 1/8	74
272 510 R11		25
272 527 R1	3/4	150
272 527 R1	3/4	152
272 529 R1	3/8	148
272 529 R1	3/8	151
272 603 R1		68
272 612 R91	43	177
272 612 R91	43	182
272 613 R91	51 1/2	177
272 614 R91	32	177
272 614 R91	32	182
272 618 R91		177
272 622 R11	3/8	177
272 622 R11	3/8	182
272 623 R1		177
272 623 R1		182
272 624 R1	1/8	177
272 624 R1	1/8	182
272 625 R91		175
272 625 R91		179
272 626 R91		175
272 627 R91	23 1/4	175
272 627 R91	23 1/4	180
272 631 R91		175
272 635 R11	3/8	175
272 635 R11	3/8	180
272 637 R1		175
272 637 R1		180
272 639 R1		175
272 639 R1		180
272 640 R1	4	175
272 640 R1	4	179
272 640 R1	4	180
272 641 R1	4 3/4	175
272 641 R1	4 3/4	180
272 642 R92		176
272 642 R92		180
272 643 R92		176
272 645 R1	5	177
272 645 R1	5 5/8	178
272 645 R1	5	182
272 646 R1		177
272 646 R1		182
272 647 R92		178
272 647 R92		183
272 648 R92		178
272 747 R11	2 3/8	64
272 747 R11	7 1/2	65
272 753 R1	1/4	74
272 753 R1	1/4	76
272 799 R1	1/8	25
272 799 R1	1/8	38
272 800 R91	2 3/4	25
272 800 R91	2 3/4	36
272 801 R91	2 3/4	25
272 801 R91	2 3/4	36
272 852 R1	1/8	173
272 853 R1	1/8	173
272 857 R91		173
272 857 R91		235
272 858 R91		173
272 925 R1		192
272 925 R1		195
272 926 R1	35	175
272 927 R1	5	175
272 928 R1	2	175
272 929 R1	11	175
272 931 R1	64	177

NUMERICAL INDEX

PART NUMBER	APPROX. WEIGHT IN POUNDS	PAGE
272 932 R1		177
273 036 R1	1/8	77
273 100 R1		209
273 101 R1	3 1/4	209
273 103 R1		209
273 162 R92		208
273 165 R92	1/8	33
273 166 R92		22
273 167 R92		142
273 168 R91		142
273 169 R91		142
273 170 R91		144
273 171 R92		144
273 226 R1	1	85
273 258 R91		144
273 259 R91		142
273 263 R1	1/8	144
273 264 R1	1/8	142
273 269 R91		66
273 286 R91		120
273 286 R91		121
273 286 R91		126
273 286 R91		128
273 286 R91		130
273 286 R91		133
273 286 R91		136
273 286 R91		137
273 286 R91		139
273 286 R91		140
273 299 R91		110
273 299 R91		111
273 299 R91		115
273 299 R91		126
273 299 R91		128
273 299 R91		131
273 299 R91		134
273 299 R91		137
273 299 R91		140
273 313 R91		175
273 314 R91		175
273 315 R91		179
273 316 R91		179
273 317 R91		179
273 318 R91		179
273 319 R11		174
273 320 R11		174
273 321 R91		177
273 322 R91		177
273 323 R11		177
273 324 R11		177
273 326 R1		175
273 326 R1		178
273 326 R1		180
273 326 R1		183
273 337 R91		182
273 338 R91		182
273 339 R91		182
273 340 R91		182
273 405 R1		122
273 406 R1		122
273 418 R1	2	180
273 418 R1	2	181
273 476 R1	1/2	184
273 477 R1	1/4	184
273 499 R91		208
273 500 R92		209
273 565 R91	1/4	191
273 566 R91		183
273 567 R91	38	116
273 567 R91	38	126
273 567 R91	38	128
273 567 R91	38	130
273 567 R91	38	133

NUMERICAL INDEX

PART NUMBER	APPROX. WEIGHT IN POUNDS	PAGE
273 567 R92		116
273 567 R92		118
273 567 R92		136
273 567 R92		139
273 571 R91		174
273 571 R91		177
273 571 R91		179
273 575 R91		194
273 577 R91	5/8	183
273 638 R91		184
273 638 R91		238
273 638 R91		239
273 639 R1	9	184
273 642 R1	16	184
273 668 R1	1 1/4	34
273 701 R91		41
273 777 R91		239
273 778 R91		240
273 851 R1	1/4	34
273 867 R91		175
273 867 R91		180
273 868 R91		177
273 868 R91		182
273 870 R1		186
273 870 R1		187
273 871 R1		188
273 871 R1		189
273 887 R1		64
273 901 R91		93
273 901 R91		94
273 901 R91		97
273 901 R91		99
273 901 R91		130
273 931 R1		179
273 994 R1		112
274 075 R2	1/8	167
274 087 R91		64
274 088 R91		44
274 133 R91		182
274 160 R91		162
274 163 R1		163
274 164 R1		163
274 165 R1		162
274 165 R1		163
274 167 R11		163
274 168 R1		161
274 168 R1		163
274 169 R1		161
274 169 R1		162
274 169 R1		163
274 170 R1		162
274 170 R1		163
274 305 R91		93
274 305 R91		94
274 305 R91		97
274 305 R91		99
274 305 R91		126
274 305 R91		128
274 305 R91		130
274 305 R91		133
274 305 R91		136
274 305 R91		139
274 455 R91		136
274 515 R91		238
274 515 R91		239
274 516 R91		241
274 570 R91		101
274 570 R91		123
274 570 R91		238
274 570 R91		239
274 570 R91		241
274 571 R91		101
274 571 R91		123

NUMERICAL INDEX

PART NUMBER	APPROX. WEIGHT IN POUNDS	PAGE
274 599 R1	1/8	76
274 608 R11		218
274 698 R1		163
274 699 R1		163
274 863 R1		167
274 864 R1		167
274 876 R91	5 3/8	66
274 912 R91		175
274 912 R91		180
274 912 R91		235
274 913 R91		178
274 913 R91		183
274 914 R1		175
274 914 R1		179
274 915 R1		177
274 915 R1		178
274 915 R1		182
274 931 R91	3/4	68
274 968 R11		161
274 969 R91		161
274 971 R1		162
274 972 R1		162
274 973 R91		235
275 049 R2		175
275 066 R1		148
275 066 R1		150
275 141 R11		226
275 157 R1		206
275 158 R1		206
275 159 R11		55
275 163 R91		52
275 163 R91		54
275 164 R2		55
275 167 R2		55
275 168 R11		55
275 169 R11		68
275 170 R11		67
275 171 R91		67
275 173 R1		67
275 174 R91		126
275 174 R91		128
275 174 R91		133
275 174 R91		139
275 175 R11		146
275 176 R11		146
275 179 R1		162
275 180 R1		162
275 182 R91		161
275 182 R91		162
275 183 R91		161
275 183 R91		162
275 184 R11		146
275 185 R11		146
275 186 R11		146
275 187 R11		146
275 188 R1	4	68
275 189 R1	4	67
275 190 R11		67
275 192 R91		67
275 193 R1		67
275 194 R91		67
275 195 R11		215
275 196 R11		215
275 197 R1		211
275 197 R1		213
275 197 R1		215
275 198 R21		211
275 198 R21		213
275 198 R21		215
275 199 R1		211
275 199 R1		213
275 199 R1		215
275 200 R11		150

PART NUMBER	APPROX. WEIGHT IN POUNDS	PAGE
275 204 R11		214
275 207 R91		211
275 207 R91		212
275 207 R91		214
275 211 R1		211
275 211 R1		213
275 211 R1		215
275 212 R2		211
275 212 R2		213
275 212 R2		215
275 213 R11		211
275 213 R11		213
275 213 R11		215
275 214 R11		215
275 215 R1		214
275 216 R1		213
275 216 R1		215
275 217 R1		164
275 217 R1		165
275 218 R1		164
275 218 R1		165
275 219 R1		164
275 219 R1		165
275 220 R1		164
275 220 R1		165
275 221 R91		164
275 221 R91		166
275 222 R1		164
275 222 R1		166
275 223 R1		166
275 224 R1		166
275 225 R1		156
275 225 R1		158
275 226 R1		155
275 226 R1		158
275 227 R11		141
275 227 R11		143
275 228 R11		209
275 229 R11		209
275 230 R11		209
275 231 R11		209
275 233 R1		57
275 237 R91		211
275 237 R91		213
275 237 R91		215
275 239 R11		206
275 240 R11		206
275 241 R1		123
275 245 R1		215
275 245 R11		211
275 245 R11		213
275 248 R91		209
275 249 R11		211
275 249 R11		213
275 249 R11		215
275 251 R1		213
275 251 R1		215
275 253 R11		45
275 255 R2		33
275 255 R2		45
275 256 R91		68
275 258 R11		208
275 259 R11		209
275 262 R11		209
275 263 R1		209
275 264 R1		209
275 265 R1		209
275 266 R11		208
275 268 R1		209
275 269 R1		209
275 272 R92		208
275 273 R11		215
275 274 R11		215

PART NUMBER	APPROX. WEIGHT IN POUNDS	PAGE
275 276 R91		93
275 276 R91		95
275 276 R91		97
275 276 R91		99
275 276 R91		126
275 276 R91		128
275 276 R91		130
275 276 R91		133
275 276 R91		137
275 276 R91		140
275 277 R91		128
275 277 R91		133
275 277 R92		136
275 277 R92		139
275 278 R91		93
275 278 R91		95
275 278 R91		97
275 278 R91		99
275 278 R91		126
275 278 R91		128
275 278 R91		130
275 278 R91		133
275 278 R91		136
275 278 R91		139
275 279 R1		98
275 279 R1		100
275 279 R1		126
275 279 R1		128
275 279 R1		131
275 279 R1		134
275 279 R1		137
275 279 R1		140
275 280 R91		128
275 280 R91		133
275 281 R91		93
275 281 R91		95
275 281 R91		97
275 281 R91		126
275 281 R91		128
275 281 R91		131
275 281 R91		134
275 281 R91		137
275 281 R91		139
275 282 R91		93
275 282 R91		94
275 282 R91		97
275 282 R91		99
275 282 R91		119
275 282 R91		126
275 282 R91		128
275 282 R91		130
275 282 R91		133
275 282 R91		136
275 282 R91		139
275 282 R91		211
275 282 R91		213
275 282 R91		215
275 283 R92		30
275 283 R92		42
275 289 R92		45
275 290 R91		218
275 290 R91		241
275 291 R91		218
275 292 R91		45
275 292 R91		238
275 292 R91		239
275 292 R91		241
275 293 R1		45
275 294 R91		219
275 295 R11		220
275 297 R11		207
275 300 R11		211
275 300 R11		212

NUMERICAL INDEX

PART NUMBER	APPROX. WEIGHT IN POUNDS	PAGE
275 303 R11		209
275 304 R11		209
275 305 R11		209
275 306 R11		209
275 309 R11		148
275 313 R11		145
275 314 R11		145
275 315 R11		145
275 316 R11		145
275 317 R1		161
275 318 R1		161
275 319 R1		205
275 320 R1		205
275 321 R11		52
275 323 R11		52
275 324 R11		52
275 325 R91		68
275 327 R1		67
275 329 R11		68
275 329 R91		67
275 330 R91		52
275 332 R1		67
275 333 R1	4	68
275 334 R1	4	67
275 335 R1	2	68
275 336 R1	2 1/2	67
275 337 R11		67
275 339 R91		67
275 340 R2		43
275 340 R2		44
275 341 R91		68
275 342 R11		52
275 343 R11		205
275 344 R11		205
275 345 R1		211
275 346 R11		211
275 347 R1		141
275 348 R91		216
275 349 R11		213
275 350 R1		212
275 351 R11		213
275 352 R11		211
275 353 R11		213
275 355 R1		211
275 356 R1		43
275 357 R11		44
275 359 R11		43
275 361 R1		43
275 362 R1		43
275 363 R11		43
275 364 R11		43
275 366 R2		22
275 366 R2		45
275 369 R11		211
275 369 R11		213
275 370 R11		211
275 370 R11		213
275 371 R21		213
275 373 R11		52
275 373 R91		97
275 377 R92		44
275 378 R1		19
275 379 R91		85
275 379 R91		87
275 379 R91		93
275 379 R91		95
275 379 R91		97
275 379 R91		99
275 380 R91		93
275 380 R91		95
275 380 R91		97
275 380 R91		99
275 381 R91		99

NUMERICAL INDEX

PART NUMBER	APPROX. WEIGHT IN POUNDS	PAGE
275 381 R91		126
275 381 R91		130
275 381 R92		136
275 381 R92		139
275 382 R91		90
275 382 R91		93
275 382 R91		94
275 382 R91		95
275 382 R91		97
275 382 R91		99
275 382 R91		100
275 382 R91		101
275 383 R91		93
275 383 R91		126
275 384 R11		85
275 386 R1		85
275 387 R1		110
275 388 R91		86
275 388 R91		93
275 388 R91		95
275 388 R91		97
275 388 R91		99
275 389 R91		93
275 389 R91		94
275 389 R91		97
275 389 R91		99
275 389 R91		102
275 390 R91		218
275 390 R91		238
275 390 R91		239
275 391 R91		218
275 395 R11		164
275 396 R11		155
275 397 R91		221
275 398 R91		221
275 399 R1		222
275 530 R11		217
275 574 R91		90
275 574 R91		120
275 574 R91		235
275 576 R91		90
275 576 R91		120
275 577 R1		90
275 577 R1		120
275 578 R91		90
275 579 R1		90
275 579 R1		120
275 597 R91		174
275 597 R91		177
275 604 R12		36
275 607 R1	3 7/8	39
275 608 R91	6	76
275 609 R1		76
275 609 R11	11 1/4	76
275 610 R1		76
275 611 R1		76
275 612 R11	1/4	76
275 613 R1		75
275 613 R11	3 5/8	75
275 614 R1		75
275 615 R11		75
275 619 R1		76
275 619 R11	25 5/8	76
275 620 R93	47	76
275 623 R1		76
275 624 R1	1/8	76
275 625 R2	1/2	76
275 626 R2	2 1/4	76
275 627 R11	9 1/2	76
275 628 R11	6 1/4	76
275 629 R11	1 1/8	76
275 630 R11	1/8	76
275 631 R1	1 1/2	60

NUMERICAL INDEX

PART NUMBER	APPROX. WEIGHT IN POUNDS	PAGE
275 632 R11	3 1/2	60
275 633 R91	4	59
275 633 R91	4	60
275 634 R1		60
275 634 R1		77
275 635 R1		59
275 636 R1		59
275 637 R11	1/2	58
275 638 R11	1/2	58
275 639 R11	1/2	58
275 640 R11	1/2	59
275 641 R91		59
275 642 R1		59
275 643 R1		59
275 644 R1		59
275 645 R1	3	64
275 645 R1	3	65
275 647 R92		36
275 664 R11		217
275 679 R91		216
275 686 R1	1/2	36
275 687 R1	7/8	38
275 688 R1	1/4	26
275 688 R1	1/4	38
275 689 R11	2 3/4	34
275 689 R11	2 3/4	45
275 692 R11	2 3/4	34
275 692 R11	1 1/4	45
275 694 R1	22 3/4	36
275 695 R1	1/4	111
275 696 R1		110
275 696 R1		111
275 697 R91		110
275 697 R91		111
275 697 R91		126
275 697 R91		128
275 697 R91		130
275 697 R91		133
275 697 R91		136
275 697 R91		139
275 698 R91		41
275 699 R1	3 1/4	110
275 699 R1	3 1/4	111
275 702 R1	1 1/2	31
275 702 R1	1 1/2	40
275 705 R91		39
275 711 R91	4	49
275 712 R11		164
275 712 R11		165
275 713 R11		164
275 713 R11		165
275 715 R1		164
275 715 R1		165
275 716 R91		164
275 716 R91		165
275 719 R91	1/8	60
275 734 R1		161
275 734 R1		163
275 735 R91		219
275 736 R91		219
275 738 R11		158
275 739 R12		156
275 739 R12		159
275 742 R1		156
275 742 R1		159
275 743 R1		156
275 743 R1		159
275 744 R1		159
275 744 R2		156
275 745 R11		156
275 745 R11		159
275 746 R1		156
275 746 R1		159

- 269 -

NUMERICAL INDEX

PART NUMBER	APPROX. WEIGHT IN POUNDS	PAGE
275 747 R12		156
275 747 R12		159
275 748 R2		156
275 748 R2		159
275 763 R91		224
275 764 R1	1/4	222
275 764 R1	1/4	225
275 765 R1	7/8	222
275 765 R1	7/8	225
275 767 R91		221
275 768 R91		221
275 771 R91		234
275 772 R91		240
275 772 R92		160
275 774 R91		45
275 774 R91		241
275 775 R1		221
275 775 R1		225
275 776 R1		221
275 776 R1		225
275 777 R11		221
275 777 R11		225
275 778 R1		221
275 778 R1		225
275 779 R1		222
275 779 R1		225
275 783 R91		224
275 784 R1		164
275 784 R1		166
275 785 R1		164
275 785 R1		166
275 786 R91		219
275 787 R11		219
275 788 R91		219
275 791 R91		232
275 791 R91		238
275 792 R91		232
275 792 R91		239
275 792 R91		241
275 793 R91		232
275 795 R11		207
275 798 R92		157
275 798 R92		238
275 798 R92		239
275 800 R1	1	14
275 800 R1	1	25
275 801 R91		49
275 802 R91	3	60
275 803 R11	2 1/2	60
275 805 R1		57
275 806 R11	3/8	56
275 807 R11	3/8	56
275 808 R11	3/8	56
275 809 R11	3/8	56
275 810 R91	2	56
275 811 R91	37	64
275 812 R91	5	64
275 815 R1	1/4	25
275 816 R1		26
275 818 R11	5 1/4	23
275 818 R11	5 1/4	45
275 820 R1	1 1/8	31
275 821 R1	1/2	31
275 821 R1	1/2	40
275 822 R91	1 1/8	23
275 822 R91	1 1/8	45
275 844 R1		53
275 881 R91		77
275 894 R11	3/4	36
275 904 R1		56
275 911 R91		109
275 911 R91		238
275 911 R91		239

PRINTED IN UNITED STATES OF AMERICA

NUMERICAL INDEX

PART NUMBER	APPROX. WEIGHT IN POUNDS	PAGE
275 911 R91		241
275 912 R1		84
275 913 R91		223
275 914 R11		223
275 915 R11		223
275 916 R91		233
275 917 R11		233
275 918 R11		234
275 919 R11		234
275 921 R1		233
275 922 R91		233
275 923 R91		233
275 924 R1		233
275 929 R1		197
275 929 R1		200
275 930 R91		197
275 930 R91		203
275 932 R1		197
275 932 R1		200
275 933 R91		197
275 940 R91		197
275 941 R91		197
275 942 R91		223
275 943 R91		233
275 944 R11		233
275 945 R91		233
276 068 R11		54
276 097 R11		240
276 099 R92		240
276 129 R11		240
276 130 R91		240
276 132 R91		229
276 132 R91		238
276 132 R91		239
276 132 R91		240
276 133 R11		206
276 135 R1		238
276 135 R1		239
276 135 R1		240
276 136 R91		240
276 137 R91		240
276 150 R1		223
276 156 R1		156
276 156 R1		159
276 156 R1		233
276 183 R91		77
276 198 R91		238
276 198 R92		12
276 203 R91		194
276 212 R92		44
276 213 R92		43
276 214 R91		43
276 214 R91		44
276 215 R91		43
276 215 R91		44
276 216 R91		43
276 216 R91		44
276 217 R1		43
276 217 R1		44
276 218 R1		43
276 218 R1		44
276 219 R91		43
276 219 R91		44
276 221 R1		230
276 222 R91		30
276 222 R91		42
276 224 R1		30
276 224 R1		42
276 242 R91		218
276 243 R91		218
276 341 R1		19
276 342 R1		53
276 343 R11		53

NUMERICAL INDEX

PART NUMBER	APPROX. WEIGHT IN POUNDS	PAGE
276 344 R91		53
276 345 R11		53
276 346 R1		53
276 347 R91		53
276 348 R91		53
276 349 R1		53
276 381 R11		53
276 409 R91		223
276 436 R11		238
276 436 R11		239
276 437 R91		238
276 437 R91		239
276 440 R91		238
276 441 R11		206
276 443 R11		206
276 450 R11		52
276 489 R1		76
276 490 R1		76
276 576 R1		209
276 584 R1		52
276 585 R1		52
276 596 R91		218
276 597 R91		218
276 611 R1		148
276 611 R1		150
276 634 R1		240
276 678 R91		229
276 740 R1		217
276 741 R1		217
276 742 R1		217
276 789 R1	1/8	76
276 790 R1		76
276 792 R2	1/2	76
276 792 R21	3	76
276 793 R2	2 1/8	76
276 799 R92		77
276 814 R11		52
276 820 R91		227
276 821 R91		228
276 954 R1		60
276 975 R1		91
276 975 R1		123
276 975 R1		208
276 976 R1		123
276 979 R91		123
276 981 R1		225
276 995 R91		91
276 997 R11		68
277 017 R91		240
277 018 R91		189
277 018 R91		240
277 019 R91		189
277 019 R91		240
277 020 R91		240
277 021 R91		188
277 021 R91		240
277 025 R92		61
277 033 R91		61
277 037 R1		156
277 037 R1		159
277 043 R91		61
277 043 R91		241
277 044 R91		61
277 048 R1		61
277 050 R91		61
277 050 R91		239
277 068 R11		53
277 071 R1		28
277 072 R1		28
277 073 R1		28
277 074 R1		28
277 075 R1		28
277 076 R1		28

NUMERICAL INDEX

PART NUMBER	APPROX. WEIGHT IN POUNDS	PAGE
277 077 R91		28
277 078 R91		28
277 079 R91		28
277 088 R1		184
277 098 R11		23
277 099 R91		184
277 099 R91		240
277 173 R91		122
277 173 R91		136
277 173 R91		139
277 174 R91		111
277 174 R91		114
277 174 R91		128
277 174 R91		136
277 174 R91		139
277 175 R91		111
277 175 R91		112
277 175 R91		115
277 175 R91		126
277 175 R91		128
277 175 R91		131
277 175 R91		134
277 175 R91		137
277 175 R91		140
277 180 R1		231
277 208 R91		46
277 208 R91		238
277 208 R91		239
277 209 R1		163
277 232 R1		56
277 288 R91		239
277 288 R91		241
277 298 R1		34
277 299 R1		34
277 372 R91		93
277 372 R91		95
277 372 R91		97
277 372 R91		99
277 374 R91		126
277 374 R91		128
277 374 R91		131
277 374 R91		137
277 374 R91		140
277 382 R91		94
277 382 R91		99
277 382 R91		100
277 384 R91		112
277 384 R91		113
277 384 R91		126
277 384 R91		130
277 384 R91		136
277 384 R91		139
277 415 R91		142
277 416 R91		142
277 416 R91		235
277 417 R1		100
277 417 R1		122
277 418 R1		100
277 418 R1		122
277 419 R91		100
277 419 R91		122
277 421 R91		144
277 422 R91		144
277 423 R91		142
277 424 R91		142
277 424 R91		235
277 448 R1		62
277 448 R1		64
277 454 R11		229
277 460 R91		95
277 460 R91		99
277 460 R91		101
277 460 R91		122

NUMERICAL INDEX

PART NUMBER	APPROX. WEIGHT IN POUNDS	PAGE
277 460 R91		136
277 460 R91		139
277 461 R11		101
277 461 R11		122
277 464 R11		238
277 464 R11		239
277 464 R11		240
277 480 R1		30
277 504 R1		187
277 505 R91		187
277 506 R91		187
277 506 R91		238
277 506 R91		239
277 507 R1		189
277 508 R91		189
277 509 R91		189
277 510 R91		189
277 510 R91		240
277 674 R11		76
277 675 R91		144
277 676 R91		144
277 682 R1		142
277 723 R1		91
277 723 R1		123
277 748 R91		232
277 750 R11		76
277 751 R11		76
277 752 R91		77
277 753 R91		77
277 754 R1	1/8	76
277 770 R1		145
277 771 R1		145
277 772 R1		238
277 772 R1		239
277 773 R1		238
277 773 R1		239
277 869 R91		207
277 869 R91		238
277 869 R91		239
277 870 R11		207
277 871 R11		207
277 874 R11		207
277 876 R1		207
277 877 R91		207
277 877 R91		241
277 878 R11		207
277 879 R11		207
277 921 R1		178
278 008 R91		60
278 013 R91		22
278 020 R2		55
278 021 R2		55
278 027 R1		15
278 027 R1		26
278 027 R1		38
278 027 R1		74
278 027 R1		77
278 027 R91		168
278 027 R91		170
278 090 R1		90
278 090 R1		120
278 091 R91		90
278 091 R91		120
278 092 R1		90
278 092 R91		120
278 093 R91		120
278 093 R91		121
278 093 R91		126
278 093 R91		128
278 093 R91		130
278 093 R91		133
278 093 R91		136
278 093 R91		137

NUMERICAL INDEX

PART NUMBER	APPROX. WEIGHT IN POUNDS	PAGE
278 093 R91		139
278 093 R91		140
278 139 R91		238
278 139 R91		239
278 140 R11		164
278 140 R11		165
278 141 R11		164
278 141 R11		165
278 168 R91		33
278 292 R11		34
278 293 R91		34
278 373 R1		238
278 373 R1		239
278 374 R1		238
278 374 R1		239
278 403 R2		207
278 536 R1		65
278 538 R1		68
278 541 R1		64
278 574 R11	1/8	57
278 729 R91		102
278 730 R91		124
278 755 R1		211
278 755 R1		213
278 755 R1		215
278 756 R1		215
278 899 R1		213
278 900 R1		57
278 900 R1		213
278 910 R91		90
278 910 R91		93
278 910 R91		94
278 910 R91		95
278 910 R91		97
278 910 R91		99
278 910 R91		100
278 910 R91		101
278 919 R1		231
278 953 R91		22
278 953 R91		33
278 953 R91		45
278 953 R91		55
278 953 R91		68
279 024 R91		65
279 026 R91		43
279 026 R91		67
279 026 R91		68
279 072 R1		217
279 073 R1		217
279 074 R1		217
279 096 R91		216
279 096 R91		238
279 096 R91		239
279 171 R1		34
279 173 R1		61
279 242 R1		40
279 243 R1		214
279 279 R1		95
279 337 R1		159
279 338 R1		167
279 339 R91		159
279 339 R91		167
279 425 R1		157
279 426 R1		157
279 427 R1		157
279 427 R1		160
279 428 R11		157
279 429 R1		157
279 430 R91		157
279 431 R1		160
279 432 R1		160
279 433 R1		160
279 434 R91		160

NUMERICAL INDEX

PART NUMBER	APPROX. WEIGHT IN POUNDS	PAGE
279 435 R11		160
279 436 R91		157
279 436 R91		235
279 437 R91		160
279 437 R91		235
279 466 R91		157
279 466 R91		160
279 491 R92	3/8	194
279 493 R92		166
279 495 R92		166
279 614 R91		136
279 679 R1		76
279 732 R1		157
279 733 R1		160
279 749 R91	1/4	160
279 753 R91		157
279 791 R1		76
279 980 R91		77
280 655 R91	12	229
280 703 R1	3/4	91
280 703 R1	3/4	123
280 704 R1		91
280 704 R1		123
280 706 R11	28	150
280 874 R1	1/8	229
281 065 R11		68
281 066 R1		68
281 093 R14	335	181
281 095 R1	1	179
281 095 R1	1	181
281 096 R1	5/8	179
281 096 R1	5/8	181
281 097 R1	2 1/8	179
281 097 R1	2 1/8	181
281 195 R91	3/8	211
281 195 R91	3/8	213
281 195 R91	3/8	215
281 268 R2		101
281 268 R2		123
281 424 R91		231
281 424 R91		238
281 649 R1		148
281 923 R1	7/8	91
281 923 R1	7/8	101
281 923 R1	7/8	121
281 924 R1	1/2	91
281 924 R1	1/2	101
281 924 R1	1/2	121
282 081 R91		91
282 081 R91		121
282 569 R11		217
282 654 R1		112
282 655 R1		112
282 790 R1		112
282 818 R1		148
282 818 R1		150
282 850 R91		66
283 161 R1		226
283 280 R91		231
288 093 R91		130
295 058 R1		175
295 059 R1		175
295 762 R1		194
296 769 R1		230
296 770 R1		231
300 559 R91		95
300 559 R91		99
300 559 R91		137
300 559 R91		140
302 912 R91		191
303 381 R1		37
303 382 R1		37
303 383 R1		37

NUMERICAL INDEX

PART NUMBER	APPROX. WEIGHT IN POUNDS	PAGE
303 764 R91		142
303 765 R1		142
303 766 R91		144
303 767 R1		144
303 926 R1		55
303 962 R1		53
303 962 R1		241
304 814 R1		177
304 814 R1		182
304 816 R1		175
304 816 R1		179
304 900 R91		175
304 900 R91		179
304 901 R91		175
304 904 R1		175
304 904 R91		180
304 905 R11		175
304 905 R11		180
304 906 R1		175
304 906 R1		180
304 907 R91		175
304 907 R91		180
304 908 R1		175
304 908 R1		178
304 908 R1		180
304 908 R1		182
304 909 R91		226
304 909 R91		231
304 910 R1		226
304 911 R91		177
304 911 R91		182
304 912 R91		177
304 915 R91		177
304 915 R91		182
304 916 R11		177
304 916 R11		182
304 917 R1		177
304 917 R1		182
304 918 R91		177
304 918 R91		182
350 429 R1		201
350 818 R1		197
350 818 R1		201
351 218 R92		82
351 218 R92		97
351 218 R92		99
351 588 R1		48
351 693 R92		80
351 693 R92		105
351 910 R91		70
351 959 R1		48
351 973 R1		12
352 079 R1	2	78
352 080 R91	1/8	79
352 080 R91	1/8	104
352 198 R1		200
352 199 R1		200
352 200 R21		200
352 201 R2		200
352 202 R1		200
352 203 R1		200
352 216 R1		201
352 221 R1		199
352 221 R1		201
352 231 R11		201
352 277 R11		80
352 277 R11		105
352 284 R2		80
352 284 R2		105
352 293 R1		80
352 293 R1		105
352 298 R1		80
352 298 R1		106

NUMERICAL INDEX

PART NUMBER	APPROX. WEIGHT IN POUNDS	PAGE
352 301 R1		80
352 352 R1		50
352 369 R2		201
352 370 R1		201
352 560 R1	1 5/8	104
352 560 R91	1 5/8	234
352 642 R91		48
352 749 R94		18
352 749 R94		235
353 050 R1		108
353 051 R91		83
353 051 R91		108
353 051 R91		235
353 052 R1		108
353 053 R1		108
353 171 R91		82
353 171 R91		107
353 172 R91		80
353 172 R91		105
353 213 R2		197
353 213 R2		200
353 216 R91	1 5/8	198
353 217 R92		198
353 217 R92		199
353 218 R91		198
353 218 R91		199
353 220 R1		198
353 222 R1		199
353 223 R1		199
353 224 R1		199
353 225 R1		199
353 226 R1		199
353 228 R1		199
353 746 R94		17
353 874 R91		79
353 874 R91		93
353 874 R91		95
353 889 R1		79
353 889 R91		104
353 892 R91		105
353 892 R91		126
353 892 R91		128
353 892 R91		136
353 894 R1		80
353 894 R1		106
353 895 R1		80
353 895 R1		106
353 896 R91		80
353 896 R91		105
353 898 R11		80
353 898 R11		106
353 899 R1		80
353 899 R1		106
353 900 R11		80
353 900 R11		105
353 901 R2		80
353 901 R2		105
353 902 R1		80
353 902 R1		106
353 903 R92		80
353 903 R92		105
353 905 R1		80
353 905 R1		105
353 906 R1		80
353 906 R1		105
353 907 R1		80
353 907 R1		105
353 915 R91		80
353 917 R91		105
353 919 R1		105
353 920 R1		105
353 930 R1		106
353 934 R11		79

NUMERICAL INDEX

PART NUMBER	APPROX. WEIGHT IN POUNDS	PAGE
353 934 R11		105
353 936 R2		79
353 936 R2		104
353 937 R1		79
353 937 R1		104
353 941 R1		105
353 982 R91		78
353 983 R91		78
353 985 R91		78
353 986 R91		78
354 047 R1		201
354 048 R1		201
354 049 R1		201
354 051 R1		201
354 476 R95		12
354 476 R95		235
354 489 R1	1	14
354 489 R1	1	26
354 489 R91		37
354 552 R1		80
354 552 R1		106
354 834 R11		201
354 836 R1		201
354 837 R1		201
354 846 R11		200
354 847 R2	2 1/8	197
354 847 R2	2 1/8	200
354 851 R2		203
354 852 R3		203
354 853 R4		203
354 854 R2		203
354 855 R2		203
354 856 R1		203
354 868 R93		197
354 868 R93		203
354 901 R91		80
354 951 R11		79
354 952 R2		79
354 952 R2		197
354 952 R2		201
354 953 R11		14
354 955 R31		14
354 956 R2	9 1/8	14
354 956 R2	9 1/8	234
354 981 R92		107
355 008 R91	2	47
355 010 R91	3/8	71
355 072 R91		14
355 121 R21		14
355 121 R21		234
355 140 R92	4 3/4	63
355 140 R92	4 3/4	235
355 455 R91		11
355 456 R91		11
355 460 R1		80
355 460 R1		106
355 493 R93	3 3/4	197
355 493 R93	3 3/4	203
355 494 R21		203
355 496 R92	1	197
355 496 R92	1	203
355 512 R92	2 7/8	197
355 512 R92	2 7/8	201
355 529 R92	7 3/8	197
355 529 R92	7 3/8	200
355 533 R91	3 5/8	197
355 533 R91	3 5/8	200
355 554 R95	11	197
355 554 R95	19 1/8	201
355 554 R95	11 1/2	202
355 555 R1	4	197
355 555 R1	4	201
355 556 R1	4 5/8	197

NUMERICAL INDEX

PART NUMBER	APPROX. WEIGHT IN POUNDS	PAGE
355 556 R1	4 5/8	201
355 671 R92		11
355 672 R92		11
355 724 R91		80
355 725 R91		105
355 888 R1		53
355 888 R1		55
356 022 R91		131
356 062 R91		95
356 062 R91		100
356 062 R91		126
356 062 R91		128
356 062 R91		134
356 062 R91		137
356 062 R91		140
356 622 R11		82
356 622 R11		107
356 657 R91		105
356 659 R91		105
356 686 R91		82
356 686 R92		78
356 686 R92		79
356 686 R92		104
356 686 R92		107
356 887 R91		202
356 889 R91		202
356 889 R91		235
356 951 R1		12
356 952 R92		12
356 957 R11		17
356 958 R11		17
356 959 R11		17
356 960 R11		17
356 966 R1		15
356 967 R1		15
356 968 R1		16
356 973 R91		16
356 981 R93		14
356 982 R93		14
356 985 R11		18
356 986 R11		18
356 987 R11		18
356 988 R11		18
356 989 R11		18
356 990 R11		18
356 991 R11		18
356 992 R11		18
357 002 R12		48
357 012 R1		70
357 090 R1		50
357 127 R91		199
357 128 R1		199
357 129 R1		199
357 130 R1		199
357 131 R1		199
357 132 R1		199
357 135 R1		199
357 136 R2		199
357 214 R93		197
357 214 R94	11 1/2	201
357 214 R94	11 1/2	202
357 228 R1		15
357 374 R1		11
357 374 R1		13
357 617 R1		15
357 618 R1		15
357 619 R1		16
357 673 R1		238
357 715 R1		15
357 769 R91		64
357 769 R91		65
357 770 R91		64
357 770 R91		65

NUMERICAL INDEX

PART NUMBER	APPROX. WEIGHT IN POUNDS	PAGE
357 773 R91		64
357 773 R91		65
357 774 R91	1/4	64
357 774 R91	1/4	65
357 870 R91		62
357 929 R92		79
357 929 R92		95
357 929 R92		104
357 929 R92		136
357 935 R91		79
357 957 R1		53
357 957 R1		55
357 961 R91		198
357 962 R91		198
357 965 R2		198
358 003 R91		108
358 004 R91		108
358 005 R1		108
358 006 R1		108
358 007 R91		108
358 108 R91		80
358 200 R1		202
358 581 R91		94
358 581 R91		99
358 581 R91		136
358 581 R91		139
358 585 R91		232
358 839 R91	1/8	79
358 839 R91	1/8	104
359 158 R1		50
359 158 R1		230
359 274 R91		78
359 275 R91		78
359 276 R91		78
359 277 R91		78
359 704 R1		108
359 766 R91		108
359 849 R92		134
359 851 R92		134
359 875 R1		73
359 965 R1		108
359 966 R1		107
359 967 R1		108
360 203 R11		17
360 205 R11		18
360 206 R11		18
360 372 R1		201
360 431 R91	1/4	71
360 535 R1		70
360 599 R1		49
360 599 R1		201
360 942 R91		78
360 943 R91		78
360 997 R91		198
360 997 R91		201
361 001 R11		201
361 002 R1		201
361 003 R1		201
361 004 R1		201
361 005 R11		201
361 006 R11		201
361 007 R11		201
361 009 R1		201
361 010 R1		201
361 011 R1		201
361 012 R1		201
361 085 R91		201
361 087 R91		201
361 182 R2		12
361 428 R91		198
361 686 R91		78
361 688 R91		78
361 715 R1		202

NUMERICAL INDEX

PART NUMBER	APPROX. WEIGHT IN POUNDS	PAGE
361 717 R1		202
361 718 R1		12
361 718 R11		12
361 722 R91		43
361 722 R91		44
361 999 R91		93
361 999 R91		97
361 999 R91		102
362 000 R91		124
362 000 R91		126
362 000 R91		130
362 020 R1		12
362 120 R1		95
362 120 R1		99
362 120 R1		101
362 120 R1		121
362 120 R1		137
362 120 R1		140
362 175 R93		201
362 175 R93		202
362 201 R91		69
362 331 R93		202
362 331 R93		235
362 334 R1		202
362 335 R1		202
362 337 R1		202
362 356 R1		201
362 433 R11		12
362 434 R91		12
362 435 R1		12
362 439 R91		78
362 473 R91		79
362 473 R91		80
362 473 R91		93
362 473 R91		95
362 474 R91		80
362 478 R91		80
362 522 R11		48
362 523 R1		47
362 528 R1		48
362 529 R91		47
362 545 R1		49
362 546 R1		49
362 549 R1		49
362 550 R1		49
362 551 R1		49
362 552 R1		50
362 796 R1		234
363 138 R91		201
363 138 R91		235
363 144 R92		70
363 144 R92		235
363 153 R11		20
363 231 R1		14
363 232 R1		14
363 284 R2		68
363 311 R12		126
363 315 R92		50
363 316 R92		50
363 357 R91		11
363 419 R1		102
363 419 R1		124
363 420 R91		102
363 421 R91		102
363 422 R91		124
363 423 R91		124
363 454 R1		50
363 462 R1		198
363 463 R1		198
363 634 R1	1/8	14
363 639 R11		14
363 749 R91		79
363 763 R11		79

NUMERICAL INDEX

PART NUMBER	APPROX. WEIGHT IN POUNDS	PAGE
363 763 R11		105
363 764 R1		79
363 764 R1		105
363 765 R1		79
363 765 R1		105
363 780 R93		197
363 780 R93		200
363 780 R93		202
363 781 R91		202
363 931 R11		70
364 250 R91		199
364 252 R11		12
364 310 R91		198
364 311 R91		197
364 311 R91		198
364 311 R91		200
364 312 R91		198
364 313 R91		199
364 420 R1	1 1/8	14
364 441 R1		12
364 441 R1		44
364 489 R1		69
364 489 R1		70
364 655 R1		197
364 920 R11		17
364 921 R1		17
364 922 R91		16
364 923 R91		16
364 928 R1		16
364 929 R1		16
364 930 R1		16
364 945 R91		73
364 953 R91		16
364 955 R91		16
364 957 R91		16
364 960 R91		16
364 965 R91		17
364 970 R91		16
365 229 R91		16
365 230 R91		16
365 262 R91		45
365 389 R91		49
365 412 R91		45
365 413 R1		45
365 415 R91		45
365 479 R91		78
365 583 R91		47
365 585 R1	3 1/8	62
365 590 R91		70
365 591 R91		235
365 591 R92		70
365 592 R11		14
365 609 R91		48
365 610 R91		48
365 612 R1		48
365 613 R1		48
365 739 R1		197
365 739 R1		200
365 783 R91		104
365 783 R91		126
365 783 R91		128
365 843 R1		203
366 097 R1		14
366 098 R1		14
366 476 R91		16
366 477 R91		16
366 489 R1		16
366 491 R1		15
366 492 R1		16
366 493 R91		16
366 495 R91		16
366 496 R91		16
366 513 R91		16

NUMERICAL INDEX

PART NUMBER	APPROX. WEIGHT IN POUNDS	PAGE
366 515 R91		17
366 520 R91		16
366 526 R91		17
367 883 R91		17
367 885 R91		18
368 396 R1		199
368 598 R1		15
368 710 R1		199
368 839 R91		104
368 839 R91		136
368 843 R91		104
368 843 R91		136
369 732 R1		202
455 238 R1		18
455 238 R1		223
551 655 R1		42
553 050 R1		76
553 686 R1		74
553 686 R1		76
575 606 R11		39
615 029 R1		142
615 029 R1		144
622 258 R1		74
622 258 R1		76
999 677 R91	3 3/4	226
999 677 R91	3 1/4	229
1 000 729 R3		237
1 000 730 R2		237
1 000 736 R1		237
1 000 889 R4		237
1 001 013 R5		237
1 001 071 R2		237
1 001 336 R3		237
1 001 441 R1		237
1 001 452 R2		237
1 001 516 R1		237
1 001 632 R1		237
1 001 634 R1		237
1 001 701 R2		237
1 001 736 R1		237
1 001 884 R1		237
2 750 005 R1		157
2 750 005 R1		160
2 750 005 R1		211
2 750 005 R1		213
2 750 005 R1		215
2 750 005 R1		237
2 750 008 R1		157
2 750 008 R1		160
2 750 008 R1		237
2 750 083 R1		237
2 750 243 R2		237

S

SS 83		227
SS 83		228
SS 123		227
SS 123		228

ST

ST 200	1 1/8	160
ST 200	1 1/8	225
ST 202	7/8	225
ST 204 A	1/4	224
ST 205 A		62

PART NUMBER	APPROX. WEIGHT IN POUNDS	PAGE
ST 205 A	5/8	64
ST 205 A	5/8	65
ST 205 A	5/8	221
ST 205 A	5/8	222
ST 205 A	5/8	224
ST 205 A	5/8	225
ST 206	3/4	221
ST 208 B	1/4	18
ST 208 B	1/4	142
ST 211		39
ST 214	5/8	224
ST 215		221
ST 216		156
ST 216		160
ST 223	2 1/2	195
ST 227	2	192
ST 228	2 3/4	194
ST 238		159
ST 241		225
ST 260		233
ST 276		194
ST 281		194
ST 289		70
ST 307		83
ST 307		108
ST 311		191
ST 312	7/8	142
ST 312	7/8	144
ST 315		194
ST 329		157
ST 333	1	167
ST 333	1	170
ST 506		70
ST 544		142
ST 600		82
ST 600		107
ST 601		82
ST 601		107
ST 602		82
ST 602		107
T		
TP 24		227
TP 24		228
6 403 T		233
9 982 T	1/8	57
9 982 T	1/8	59
9 983 TC		48
V		
23 174 V		14
51 346 VA		47
Y		
1 832 YA	1/4	39

—278—
MEMORANDA

PRINTED IN UNITED STATES OF AMERICA