Instruction Manual

TRACTRACTOR

Model TD-18

(Diesel)

(Standard and Wide Tread)

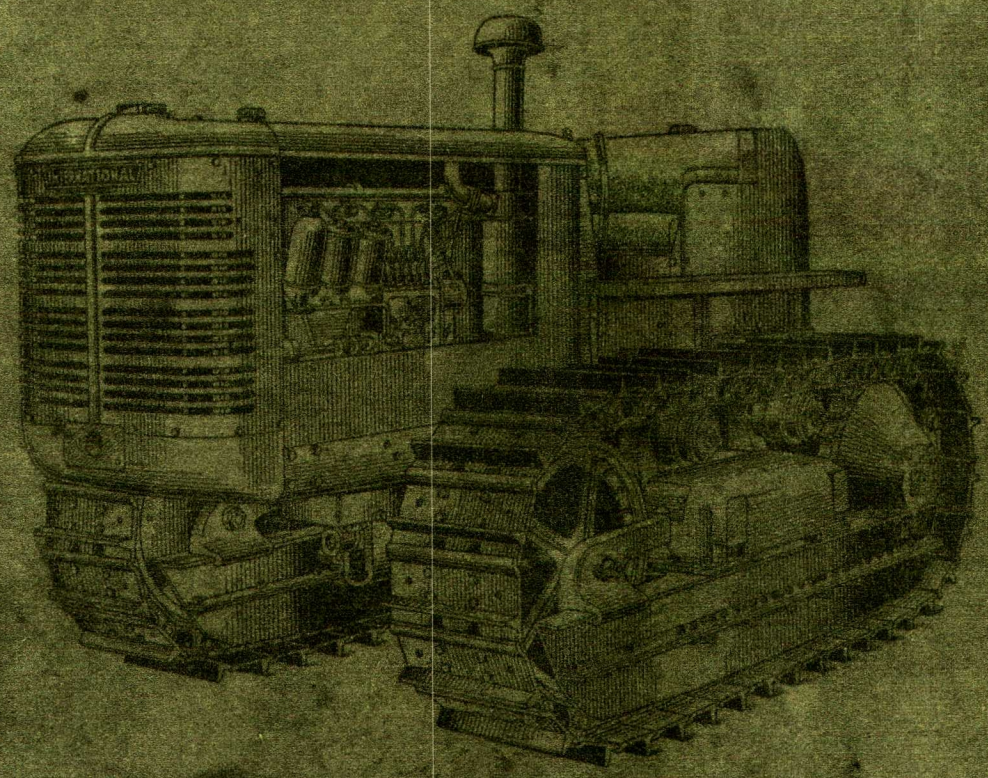

With "exploded" views and parts list.

Important:

This book contains instructions for care and operating, and in addition, a parts list with detailed illustrations of the various units arranged so that parts wanted may readily be located.

INTERNATIONAL HARVESTER COMPANY
(INCORPORATED)
180 NORTH MICHIGAN AVE. CHICAGO, ILLINOIS, U.S.A.

SPECIFICATIONS

Capacities (U. S. Measure)

Fuel tank	60 gals.
Gasoline tank	1½ gals.
Water cooling system	27 gals.
Transmission	7½ gals.
Sprocket drive cases (each side)	5 qts.
Crankcase pan	23 qts.
Injection pump (Bosch)	½ pint

Engine (Diesel Type) (45° Head)

Cylinders	6
Bore	4¼ in.
Stroke	6½ in.
Engine speed (governed)	1200 R.P.M.
Fuel injection pump	Bosch
Carburetor—IHC Type "C-12" (optional)	IHC Type F-6
Magneto with impulse coupling	IHC Type F-6
Battery (two)	17 plates
Spark plug gap	.035 in. to .040 in.
Valve clearance (engine hot)	.018 in.

Engine Clutch

Over-center type (hand-controlled)	17 in.

Steering Clutch

Multiple dry disc—spring-loaded type with actuator release	15 in.

Brake

External contracting on steering clutch drums	17 in.

Track

Tread (standard)	62 in.
Tread (wide tread)	74 in.
Ground contact length (normal)	84.4 in.
Track shoe width	18 in.

Transmission

Six speeds forward—M.P.H.	Low	1½
	Second	2
	Third	2½
	Fourth	3½
Two speeds reverse—M.P.H.	Low	2
	High	3½
	Low—Reverse	1½
	Hi—Reverse	3½

Dimensions

Length (overall)	158 in.
Width (overall) (standard tread)	82 in.
Width (overall) (wide tread)	94 in.
Height—to top of exhaust pipes	9 ft. 2 in.
Drawbar height	11½ in.
Drawbar horizontal adjustment	31 in.

TABLE

SHOWING HOW TO CONVERT "INCHES" INTO MILLIMETERS

INCHES		METRIC
1 Inch (")	=	25,4 mm
1 Foot (') or 12 Inches	=	304,8 mm
$39\frac{3}{8}$ Inches	=	1 Meter

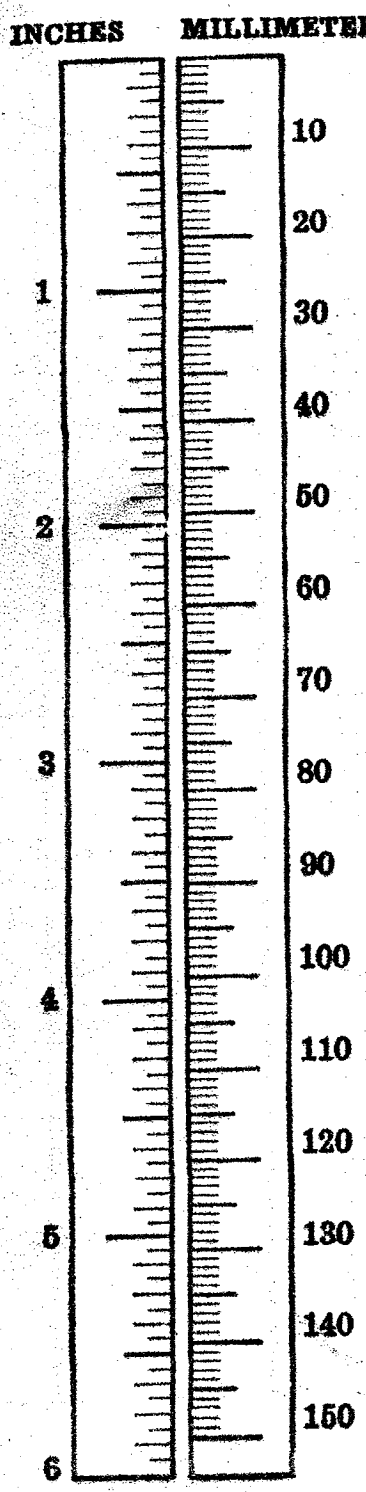

Fractions of 1 Inch	
Inch	mm
$\frac{1}{64}$	0,4
$\frac{1}{32}$	0,8
$\frac{1}{16}$	1,6
$\frac{3}{32}$	2,4
$\frac{1}{8}$	3,2
$\frac{3}{16}$	4,8
$\frac{1}{4}$	6,3
$\frac{5}{16}$	7,9
$\frac{3}{8}$	9,5
$\frac{7}{16}$	11,1
$\frac{1}{2}$	12,7
$\frac{9}{16}$	14,3
$\frac{5}{8}$	15,9
$\frac{11}{16}$	17,5
$\frac{3}{4}$	19,0
$\frac{13}{16}$	20,6
$\frac{7}{8}$	22,2
$\frac{15}{16}$	23,8

Full Inches					
Inches	mm	Inches	mm	Inches	mm
1	25,4	21	533,4	41	1041,4
2	50,8	22	558,8	42	1066,8
3	76,2	23	584,2	43	1092,2
4	101,6	24	609,6	44	1117,6
5	127,0	25	635,0	45	1143,0
6	152,4	26	660,4	46	1168,4
7	177,8	27	685,8	47	1193,8
8	203,2	28	711,2	48	1219,2
9	228,6	29	736,6	49	1244,6
10	254,0	30	762,0	50	1270,0
11	279,4	31	787,4	51	1295,4
12	304,8	32	812,8	52	1320,8
13	330,2	33	838,2	53	1346,2
14	355,6	34	863,6	54	1371,6
15	381,0	35	889,0	55	1397,0
16	406,4	36	914,4	56	1422,4
17	431,8	37	939,8	57	1447,8
18	457,2	38	965,2	58	1473,2
19	482,6	39	990,6	59	1498,6
20	508,0	40	1016,0	60	1524,0

The conversion of lengths from inches into millimeters can be made by simple addition. For example, a certain part is $10\frac{15}{16}''$ long:

$$\begin{aligned} 10'' &= 254{,}0 \text{ mm} \\ \tfrac{15}{16}'' &= 23{,}8 \text{ mm} \\ \hline \text{Total } 10\tfrac{15}{16}'' &= 277{,}8 \text{ mm} \end{aligned}$$

Conversion table as shown above is not figured up to the $\frac{1}{100}$ mm, but will prove sufficient for measurements as contained in this book.

I H C Part No.	Page No.
52055 D	112
52076 D	115
52120 D	115
52121 D	115
52122 D	115
52124 D	115
52126 D	115
52348 D	91
52390 D	109
52415 D	101
52416 D	101
52419 D	97
52433 D	91
52435 D	79
52531 D	47
52612 D	65
52613 D	65
52725 D	112
52893 D	91
52962 D	91
53009 D	91
53079 D	73
53186 D	115
53187 D	116
53188 D	115
53189 D	115
53190 D	115
53192 D	116
53193 D	115
53194 D	115
53195 D	115
53196 D	116
53389 D	88
53612 D	51
53717 D	91
53742 DA	88
53899 D	91
54111 D	103
54122 DX	67
54123 DX	67
54124 D	67
54125 D	67
54158 D	49
54158 D	49
54232 D	91
54238 D	88
54486 D	62
54487 D	62
54910 D	65
54911 DX	65
54912 DX	65
54913 DX	65
54914 DX	65
54915 DX	65
54916 DX	65
54922 DX12	65
54922 DX12	71
54949 D	87
54950 D	87
54951 D	87
54952 D	87
54953 D	87
54968 D	88
54977 DX	71
54978 DX	71
55339 D	103
55422 D	91
55468 D	77
55468 D	79
56004 D	92
56005 D	89
56006 D	89
56007 D	89
56008 D	89
56009 D	89
56010 D	89
56011 D	89
56012 D	92
56013 DX	89
56014 D	89
56015 D	92
56017 D	89
56018 DX	89
56291 D	65
56617 D	65

I H C Part No.	Page No.
57009 D	89
57100 DX	111
57101 DX	89
57102 D	89
57103 DX	89

E

I H C Part No.	Page No.
E4 212	82
E4 216	80
E4 226	80
E4 226	82
E4 267 A	80
E4 271	80
E4 295	80
E4 295	82
E4A 305	82
E4A 324	82
E4A 351	82
E4A 352	80
E4A 352	82
E4A 353	82
E4A 358	82
E4A 372	82
E4A 576	82
E 1324	75
1326 E	112

F

I H C Part No.	Page No.
10981 F	75

G

I H C Part No.	Page No.
G 3792	61
G 3836	65

H

I H C Part No.	Page No.
H 156	112
14611 H	67
14611 H	73
15033 H	92
15041 H	92
15041 H	95
16135 H	97
16135 H	98
21406 H	95
21444 H	87
21444 H	95
21491 H	91
21826 H	53
23276 H	91
26453 HX	77
29016 H	59
31208 H	51
34315 H	61
34321 HA	61
38763 H	49
50203 H	77
64931 H	75
64931 H	77

K

I H C Part No.	Page No.
11669 K	87

L

I H C Part No.	Page No.
12480 L	65

M

I H C Part No.	Page No.
M 89541	89

P

I H C Part No.	Page No.
P0 9696	51

Q

I H C Part No.	Page No.
Q 103	59
Q 3505	79
Q 3615	53
Q 3615	61
Q 3615	87
Q 3615	92
Q 3615	98
Q 3615	101
Q 3615	104
Q 3617	89
Q 3618	88
Q 3621	89
Q 3621	95
Q 3625	87
Q 3627	87
Q 3794	112
Q 3794	113

S

I H C Part No.	Page No.
ST 205	61
ST 205	89
ST 219 Y	91
ST 223	91
ST 227	91
ST 228	91
S 363	75
SA 3215	106

T

I H C Part No.	Page No.
1924 T	78
2058 T	55
2583 T	112
2584 T	112
2587 T	112
2588 T	112
3058 TA	112
4167 T	55
4167 T	59
4167 T	82
4167 T	84
5312 T3	57
7220 T	65
7220 T	91
7699 TM	75
8522 T	61
9982 T	62
9982 T	68
9982 T	71

V

I H C Part No.	Page No.
10430 V	87
10690 V	91
10815 V	77
23007 V	49
23007 V	55
23007 V	59
41513 V	91
43222 VA	55
43222 VA	61
51344 V	62

I H C Part No.	Page No.
42496 DX	91
42498 D	91
42506 D	91
42506 D	91
42511 D	91
42512 DAX	75
42512 DAX	91
42513 D	91
42514 D	91
42515 D	91
42516 D	91
42517 D	91
42518 D	91
42534 D	47
42534 D	47
42536 D	47
42537 D	47
42537 D	47
42538 D	47
42544 DA	47
42545 DA	47
42547 D	75
42548 D	111
42552 D	111
42553 DXA	75
42560 D	75
42589 D	47
42594 D	85
42595 D	85
42598 DAX	85
42599 D	47
42600 D	47
42601 DAX	47
42605 D	47
42610 D	47
42611 D	47
42612 D	47
42613 D	47
42614 D	47
42615 DB	47
42622 D	109
42623 D	109
42624 D	109
42625 D	109
42626 D	109
42627 DX	109
42628 DX	109
42629 DX	109
42630 D	109
42633 D	112
42635 D	109
42636 D	109
42650 D	78
42651 D	59
42651 DX	59
42651 DX	78
42652 D	59
42654 D	62
42655 D	62
42656 D	62
42657 D	59
42658 D	59
42659 D	59
42660 D	59
42661 D	59
42662 D	59
42663 D	59
42664 D	59
42665 D	59
42666 DX	59
42668 D	59
42669 D	59
42670 D	59
42671 D	59
42672 D	59
42673 D	59
42674 D	59
42675 D	59
42676 D	59
42677 D	59
42678 D	59
42679 D	59
42680 D	59
42686 D	61
42687 DX	51

I H C Part No.	Page No.
42687 DY	51
42688 DAX	51
42690 DAX	51
42694 D	51
42695 D	51
42696 D	51
42707 DX	53
42708 D	53
42709 DX	53
42713 D	53
42714 D	53
42715 D	57
42716 D	57
42717 D	53
42718 DA	53
42722 D	55
42723 D	55
42724 D	55
42726 DBX	55
42727 DX	55
42728 D	55
42729 DX	55
42730 D	55
42731 DA	55
42732 D	55
42733 D	55
42734 D	55
42735 D	55
42736 D	55
42737 D	55
42739 D	55
42739 D	55
42740 DA	55
42741 DB	55
42743 D	55
42745 D	55
42746 D	55
42747 D	49
42748 D	49
42749 D	67
42750 D	67
42751 D	67
42753 D	67
42754 D	67
42755 D	67
42756 D	67
42757 D	67
42758 D	67
42759 D	67
42760 D	67
42761 D	67
42762 D	49
42763 D	49
42764 D	67
42765 D	65
42766 D	65
42767 D	65
42769 D	73
42770 DX	67
42771 D	73
42772 D	73
42773 D	73
42774 D	73
42775 D	73
42776 D	67
42777 D	67
42777 D	67
42778 DX	67
42779 DX	67
42780 DX	67
42782 D	59
42783 DXB	57
42786 D	57
42789 D	57
42790 D	57
42790 D	57
42791 DA	57
42792 D	57
42794 D	57
42795 DX	57
42797 DAX	71
42799 D	65
42833 D	77
42833 D	79
42844 D	73

I H C Part No.	Page No.
42863 D	73
42867 D	73
42868 D	73
42869 D	73
42870 D	71
42870 D	73
42871 D	73
42914 D	47
42922 D	75
42922 DX	77
42922 DY	75
42937 DX	61
42938 D	61
42939 D	61
42940 D	61
42941 D	61
42942 D	61
42943 D	61
42958 D	112
42959 D	68
42971 DX	106
42972 DX	99
42973 DX	67
42974 D	67
42975 DX	67
42976 D	67
42981 DA	67
42998 D	77
42999 D	77
43002 D	65
43003 DX	57
43004 DX	57
43006 D	78
43036 D	75
43037 D	75
43038 D	75
43039 D	75
43040 D	75
43113 D	51
43144 D	47
43183 D	69
43190 D	87
43192 D	65
43193 DX	87
43195 D	87
43197 DX	87
43198 D	87
43199 D	87
43201 D	87
43202 D	87
43206 DA	87
43207 D	87
43208 DAX	87
43210 DX	87
43212 DAX	87
43213 D	87
43213 DX	87
43214 D	87
43215 D	87
43217 D	87
43247 D	87
43248 D	87
43368 D	59
43369 D	59
43370 D	59
43371 DX	59
43372 DX	59
43664 D	95
45285 DA	57
45578 DA	112
45794 D	92
45903 DA	63
45904 DB	63
45905 DB	63
45906 DA	63
45907 D	63
45908 DA	63
45976 D	53
45977 D	53
46052 D	57
46053 D	57
46054 DA	57
46351 D	53
46368 D	92
46368 D	92

I H C Page No.	Page No.
46369 D	111
46642 D	93
46643 D	93
46677 D	47
46710 DB	55
46764 D	63
46887 D	103
46998 D	55
46999 D	55
47704 DA	63
47756 DX	51
47757 DX	51
47757 DX	51
47758 DX	51
47759 DX	51
47760 DX	51
47761 DX	51
47761 DX	51
47762 DX	51
47763 DX	51
47801 D	77
47802 D	77
47823 D	91
47824 D	77
47928 D	55
47930 D	55
47931 D	55
48173 D	87
48178 D	89
48231 D	71
48232 D	71
48233 D	71
48240 DA	55
48262 D	53
48282 D	112
48375 D	85
48376 DX	85
48438 D	71
48477 D	55
48564 D	82
48694 D	77
48695 D	57
48911 D	75
48912 D	75
48913 D	75
48914 D	75
49043 D	55
49104 D	106
49364 D	63
49387 D	53
49450 D	65
49451 D	65
49453 DX	65
49454 D	65
49711 DAX	71
50092 D	112
50098 D	88
50099 D	88
50180 D	101
50181 D	101
50234 D	79
50235 D	79
50335 D	57
50336 D	57
50410 DA	49
50410 DA	53
50474 DA	53
50585 D	77
50585 D	78
50790 D	61
50822 D	89
50979 D	65
50980 D	65
51066 DX	62
51066 DX	71
51232 D	63
51274 D	115
51275 D	115
51512 D	115
51513 D	112
51513 D	115
51515 D	57
51516 D	57
51897 D	65
52033 D	47

I H C Part No.	Page No.
40877 DA	88
40880 D	89
40881 DA	88
40882 D	88
40883 DA	88
40888 D	91
40889 DA	88
40890 D	89
40891 DA	88
40925 D	93
40926 D	93
40927 D	93
40929 D	93
40930 D	93
40931 D	93
40932 D	111
40933 D	93
40938 DA	87
40941 D	87
40942 DX	87
40943 D	87
40944 DA	87
40945 D	87
40946 D	87
40947 D	87
40948 D	87
40974 D	87
40976 D	108
40977 D	108
40978 D	108
40979 D	108
40980 D	108
40981 D	108
40982 D	108
40983 D	108
40984 D	108
40985 D	108
40986 D	108
40987 D	100
40988 D	100
40990 D	98
40991 D	100
40992 D	99
40992 D	100
40993 D	99
40993 D	100
40996 DA	98
40997 DA	98
40998 DA	111
40999 D	97
41162 D	111
41400 DA	99
41401 DX	99
41402 DA	99
41404 DX	99
41404 DX	106
41405 DA	99
41406 D	99
41407 D	99
41408 D	99
41409 D	103
41410 D	103
41411 D	103
41412 D	103
41413 DA	103
41414 DA	103
41430 D	101
41431 D	101
41432 DX	101
41433 DX	101
41435 DA	101
41436 D	97
41438 D	105
41439 D	105
41440 D	105
41441 D	105
41442 D	105
41443 D	105
41444 D	105
41445 D	105
41446 D	105
41447 D	105
41448 D	105
41449 D	105
41450 D	105

I H C Part No.	Page No.
41451 D	105
41452 D	105
41453 D	105
41454 D	105
41455 D	105
41456 D	105
41457 D	105
41458 DX	105
41459 D	97
41460 D	97
41461 D	98
41462 D	97
41463 D	97
41464 D	98
41466 DA	97
41467 DA	97
41468 DA	97
41471 DX	97
41472 DX	97
41477 DX	95
41478 DX	95
41479 DX	95
41480 D	95
41483 D	95
41484 DA	95
41491 D	95
41492 D	95
41493 D	95
41494 D	95
41495 D	95
41496 D	95
41497 D	95
41498 D	95
41499 D	95
41500 D	95
41501 D	95
41508 D	95
41509 D	95
41510 D	95
41512 D	95
41514 D	95
41515 D	95
41517 D	95
41518 D	95
41519 D	95
41520 D	95
41521 D	95
41522 D	95
41523 D	95
41524 D	95
41535 DX	109
41536 DX	109
41574 DAX	71
41589 D	107
41591 DA	107
41592 D	107
41593 D	107
41594 D	107
41595 D	107
41597 D	75
41597 D	75
41597 D	91
41597 D	92
41598 D	111
41598 D	111
41599 D	111
41600 D	111
41604 D	97
41605 D	97
41606 D	97
41608 D	97
41609 D	97
41610 D	97
41612 D	97
41613 D	97
41614 D	98
41618 D	98
41619 D	98
41620 D	98
41632 D	63
41633 D	63
41637 D	63
41638 D	63
41639 D	63
41640 D	63

I H C Part No.	Page No.
41641 DX	59
41643 D	91
41644 D	91
41645 D	91
41646 D	91
41647 DB	91
41648 DA	91
41649 D	91
41651 D	91
41652 D	91
41653 D	91
41654 DX	91
41657 D	91
41658 D	91
41660 D	91
41661 D	91
41662 D	91
41663 D	91
41664 D	91
41665 D	91
41666 D	91
41667 D	91
41668 DA	91
41670 D	91
41671 D	91
41672 DR	91
41675 DA	91
41677 D	91
41678 D	91
41679 D	91
41680 D	91
41681 D	91
41682 D	91
41690 D	91
41693 D	87
41694 D	91
41745 DAX	68
41746 D	68
41747 DX	68
41766 D	97
41768 D	92
41800 D	103
41801 D	103
41815 D	104
41826 DXA	79
41827 D	77
41830 D	79
41831 D	79
41832 DAX	79
41842 D	104
41843 D	103
41845 D	103
41846 D	103
41853 DA	103
41853 DA	106
41861 D	106
41862 D	106
41865 D	106
41866 D	106
41867 DA	106
41868 D	106
41869 D	106
41876 D	97
41877 D	97
41878 D	97
41879 D	97
41880 D	98
41881 D	98
41882 D	97
41884 D	97
41886 DX	98
41889 D	97
41890 D	97
41893 D	97
41893 D	98
41894 D	98
41900 D	97
41901 D	97
41902 D	97
41906 D	77
41908 D	77
41908 D	79
41909 D	77
41916 D	77
41934 D	75

I H C Part No.	Page No.
41934 D	112
41935 D	95
41950 DX	75
41953 D	75
41953 D	112
41955 D	75
41957 D	111
41958 DA	67
41959 D	75
41960 DX	75
41961 D	75
41962 D	75
41963 D	75
41964 D	75
41965 D	75
41966 D	75
41966 D	75
41968 D	75
41973 D	75
41990 D	75
41991 D	75
41995 D	75
41996 D	75
41996 D	112
41999 D	95
42000 D	111
42003 D	104
42004 D	104
42005 D	104
42006 D	104
42101 D	100
42127 D	104
42128 D	104
42129 D	104
42130 D	104
42131 D	104
42132 D	104
42134 D	104
42135 D	104
42136 DA	104
42158 D	47
42175 D	92
42216 DX	59
42219 D	51
42220 D	78
42238 D	97
42239 D	97
42240 D	93
42283 D	97
42288 D	111
42289 D	111
42290 D	111
42293 D	101
42297 D	111
42298 D	87
42298 D	87
42356 D	68
42366 D	68
42367 D	68
42368 D	68
42369 DA	68
42371 DA	68
42372 D	68
42376 D	108
42383 D	75
42383 D	77
42383 D	112
42384 DXA	71
42385 D	71
42387 D	71
42393 D	71
42397 D	79
42398 DAX	69
42399 DA	69
42399 DA	71
42400 DCX	71
42404 DX	71
42406 DX	71
42406 DX	71
42408 DX	71
42409 DX	71
42411 DX	71
42493 DX	112
42494 DX	112
42495 D	71

I H C Part No.	Page No.
25076 D	51
25086 DA	53
25087 D	53
25090 DD	49
25093 D	51
25121 D	53
25122 D	59
25125 D	59
25125 D	59
25130 D	53
25131 D	53
25132 D	53
25132 D	84
25134 DA	51
25138 DAX	53
25140 DAX	53
25323 D	49
25329 D	69
25352 D	84
25354 D	65
25362 D	65
25462 DA	112
25463 D	112
25466 D	112
25948 D	73
25954 D	53
26915 D	51
26916 D	51
27140 DBX	49
27141 D	49
27311 D	83
27385 D	77
27386 D	77
27387 D	78
27435 D	73
27436 D	73
27444 D	73
27445 DA	73
27445 DAX	73
27452 D	73
27618 D	59
27618 D	78
27654 D	61
27927 DA	65
28388 DA	84
28592 D	78
28655 D	82
28656 DYA	82
28656 DZA	82
28657 DX	82
28674 D	82
28737 DX	51
28738 D	51
28772 D	68
28809 D	68
28856 D	80
28899 DB	71
28908 D	69
28909 D	69
28910 DA	69
28940 D	53
28950 D	67
29352 D	69
29353 DAX	69
29356 D	69
29501 DA	68
29547 D	91
29764 D	53
29764 D	84
29898 D	112
29899 D	62
29899 D	71
29899 D	89
29902 DX	73
29976 D	47
29979 D	62
30035 D	80
30036 D	80
30037 D	80
30038 D	80
30114 D	83
30378 D	82
30379 D	82
30397 D	53
30466 D	77

I H C Part No.	Page No.
30466 D	79
30665 D	77
30824 D	61
31121 D	49
31135 D	80
31439 DB	65
31441 D	65
31458 D	51
31536 D	49
31636 D	73
31729 D	53
32181 D	47
32279 DB	49
32280 DA	49
32281 D	49
32282 D	49
32283 D	49
32284 DA	49
32288 DAX	51
32305 DAX	51
32306 D	53
32307 D	51
32307 D	51
32308 D	51
32309 D	51
32310 DX	51
32311 D	51
32312 D	51
32319 D	57
32332 D	51
32333 D	51
32340 D	65
32341 D	65
32342 D	65
32343 D	65
32345 D	65
32346 DAX	65
32347 D	65
32349 D	61
32350 D	61
32351 D	61
32352 D	61
32353 D	61
32354 D	61
32355 DA	61
32356 D	61
32357 D	61
32360 D	59
32361 D	80
32362 D	65
32366 D	59
32367 DAX	53
32368 DA	53
32370 D	53
32371 D	53
32444 D	49
32445 D	49
32447 D	49
32447 D	49
32448 D	49
32454 D	49
32455 D	49
32457 D	49
32458 D	49
32459 D	49
32460 D	67
32462 D	49
32463 D	49
32464 D	49
32465 D	49
32466 DX	49
32467 DX	49
32468 DX	49
32468 DX	49
32469 D	67
32469 DX	67
32470 D	67
32471 DA	67
32479 D	67
32482 DB	49
32483 DA	49
32485 D	49
32486 DX	49
32493 D	65
32495 D	59

I H C Part No.	Page No.
32497 DX	84
32499 DAX	84
32500 DA	84
32501 D	84
32502 D	84
32503 D	84
32504 D	84
32505 D	84
32506 D	84
32506 D	84
32517 DA	57
32523 D	61
32572 DAX	73
32574 D	73
32575 D	73
32576 DX	73
32577 D	73
32578 D	73
32581 DX	73
32582 D	73
32585 DA	73
32586 D	73
32587 D	73
32588 D	73
32589 DX	73
32590 D	73
32592 D	73
32597 D	73
32599 D	73
32600 D	73
32601 D	73
32602 DAX	73
32603 DAX	83
32606 D	73
32607 DA	73
32608 D	73
32609 D	73
32610 D	73
32614 DX	73
32615 D	73
32616 D	73
32624 D	61
32671 D	83
32673 D	80
32711 D	83
32712 D	83
32713 D	49
32895 D	73
32896 D	73
32897 D	73
32941 D	112
32942 D	51
32948 D	73
33138 D	82
33150 D	83
33275 D	65
33788 D	84
35089 D	101
35252 DX	89
35319 D	84
35691 DX	73
35719 D	84
36092 D	59
36246 D	83
36794 D	61
36795 DA	61
36796 D	53
36797 D	53
36798 D	53
36799 D	53
36946 D	116
36947 D	116
37148 D	65
37150 D	65
37152 D	65
37165 D	71
37165 D	71
37165 D	71
37290 D	100
37290 D	106
37291 D	78
37293 D	99
37319 D	78
37323 D	68
37323 DX	71

I H C Part No.	Page No.
37323 DX	71
37596 D	112
37634 D	62
37976 D	79
38026 DMX	71
38026 DMX	71
38028 DM	53
38041 D	82
38100 D	77
38433 D	59
38609 DA	82
38767 D	75
38814 DX	53
39380 D	53
39401 D	51
39422 D	51
39423 D	51
39482 D	55
39556 D	82
39577 DA	68
39651 D	113
39652 D	113
39653 D	113
39654 D	113
39655 D	113
39656 DX	113
39659 D	113
39661 D	113
39662 D	113
39663 D	113
39665 D	113
39677 D	68
39749 D	78
39753 D	78
39754 D	78
39756 D	53
39757 D	53
39758 DX	53
39761 D	53
39762 D	53
39763 D	53
39764 D	53
39800 D	113
39810 D	53
39826 D	73
39868 D	113
39870 D	113
39875 DX	113
40465 DX	91
40466 DX	91
40628 D	116
40630 D	115
40631 D	116
40634 D	115
40636 D	116
40640 D	116
40641 D	116
40642 D	116
40644 D	116
40646 D	116
40647 D	116
40648 D	116
40649 D	116
40652 D	115
40653 D	115
40654 D	115
40655 D	115
40656 D	116
40657 D	116
40661 D	116
40693 D	116
40697 D	115
40698 D	115
40700 D	116
40703 D	116
40704 D	115
40711 D	116
40712 D	116
40713 D	116
40719 D	115
40722 D	115
40725 D	116
40725 D	116
40728 DA	116
40875 DAX	53

I H C Part No.	Page No.
C	
1266 C	61
19175 CA	61
D	
1242 DB	53
2546 DBYB	82
2547 DX	82
2548 DAY	80
2551 DAY6	82
3202 DBRX	51
3713 DA	53
3930 DX	80
4222 D	51
4596 D	91
4710 D	65
4926 DA	111
4988 D	49
5005 DAX	65
5006 DAX	65
5008 DBX	61
5009 DX	61
5010 DAX	61
5020 DB	49
5024 D	67
5025 DB	49
5027 DA	49
5028 D	49
5029 DX	49
5046 DBX	59
5049 DAX	73
5051 DX	73
5086 DX	83
5420 DX	61
5421 D	61
5711 DA	88
5712 DB	88
5713 DB	88
5714 DD	88
5714 DDX	88
5715 D	88
5719 D	93
5720 D	93
5723 DA	87
5725 DAX	100
5726 D	100
5727 DA	98
5728 D	98
5729 D	98
5733 D	99
5734 DY	99
5735 D	99
5767 DX	101
5768 DX	101
5769 DX	101
5770 DX	101
5772 DAX	105
5773 DAX	105
5774 DA	105
5775 DA	105
5776 DA	105
5777 D	105
5781 D	97
5782 DA	97
5783 DAX	97
5784 D	98
5785 D	98
5786 DX	97
5787 DX	97
5792 D	98
5793 D	98
5801 DX	95
5803 DA	111
5812 D	95
5813 D	95
5815 D	75
5815 D	95
5816 DA	95
5817 DA	95
5818 D	75
5818 D	95
5830 DB	107
5831 D	107
5832 DX	75
5832 DX	92
5833 D	97
5834 D	97
5836 DX	63
5837 DX	91
5838 DA	91
5839 DA	91
5841 DX	91
5842 D	91
5843 D	91
5845 D	91
5846 DX	91
5855 DX	75
5863 DBX	103
5864 DBX	103
5865 D	103
5866 DBX	103
5867 DBX	103
5869 DX	106
5870 DX	106
5873 D	106
5874 D	106
5875 DAX	106
5876 D	98
5877 DBX	97
5878 D	97
5886 DX	75
5887 DX	75
5890 D	75
5890 D	75
5897 D	104
5900 DCX	111
5913 D	47
5938 DAX	75
5938 DAX	91
5940 DA	47
5941 DB	47
5942 D	47
5944 D	47
5945 D	47
5947 DX	84
5950 DX	61
5951 D	62
5952 D	62
5953 DX	59
5954 DX	59
5955 DX	59
5957 DX	51
5957 DY	51
5958 DAX	51
5960 D	49
5963 DX	57
5966 DAX	55
5967 DX	49
5967 DY	49
5968 DX	49
5968 DY	49
5969 D	112
5970 DX	49
5971 D	67
5972 DX	49
5972 DX	67
5973 D	49
5975 DX	73
5976 DX	53
5981 DX	57
5982 DAX	57
5983 D	57
5984 DX	57
5986 D	65
5987 DX	61
5988 D	61
5989 D	61
5990 DX	68
5992 D	78
6442 D	47
6542 DX	53
8334 D	91
8364 D	105
8389 D	91
8528 D	67
8572 D	105
8679 D	92
8680 D	89
8682 DX	89
8683 DX	92
8684 DX	92
8686 DX	91
8742 DX	93
8743 DX	93
10429 D	47
10481 D	84
10482 D	84
10553 D	84
10639 D	61
10701 DA	65
10722 D	98
10951 D	49
10961 D	57
11373 D	91
11858 DA	112
12740 D	84
13000 D	49
13001 D	53
13021 D	57
13055 D	49
13062 D	53
13083 D	49
13083 D	49
13085 D	61
13085 D	84
13090 D	55
13090 D	59
13115 D	91
13193 D	62
13194 D	62
13839 D	68
13841 D	68
14581 D	73
14971 D	73
16445 D	71
16445 D	112
16718 D	71
17564 D	62
17565 DA	62
17700 D	91
17730 D	67
17730 D	67
17741 D	59
18377 D	73
18377 D	73
18377 D	73
18539 D	49
18585 DA	91
18746 DA	49
18767 D	61
18868 D	104
18938 DA	53
19289 D	112
19291 D	112
19292 D	112
19306 D	67
19323 D	112
19324 D	112
19325 D	112
19326 D	112
19327 D	112
19328 D	112
19329 D	112
19962 D	59
20156 D	112
20157 D	112
20289 D	61
20290 D	61
20293 D	61
20296 D	61
20298 DA	61
20300 D	61
20303 D	61
20308 D	61
20308 D	61
20332 D	92
20585 D	61
20586 D	61
20586 D	67
20586 D	67
20683 D	73
20684 D	73
20841 D	95
20887 D	91
21314 D	83
21318 D	82
21319 D	82
21322 D	82
21323 D	82
21324 D	82
21327 D	80
21328 DX	82
21329 DX	80
21330 D	80
21331 D	82
21333 DX6	82
21340 D	82
21342 D	82
21343 D	82
21347 DC	82
21348 DB	82
21349 D	82
21353 D	82
21360 DX6	82
21361 D	82
21362 D	82
21366 D	82
21368 DBY6	80
21373 DAYA	80
21383 D	80
21384 DXA	80
21388 DBX	80
21393 D	80
21394 D	80
21397 D	82
21399 DX	82
21401 DX	82
21409 DB	82
21422 D	82
21440 D	82
21441 D	80
21443 DX	80
21444 D	80
21460 DY	82
21463 DAXA	82
21464 DX	82
21466 D	82
21468 D	82
21469 D	82
21572 D	91
21572 D	91
21969 D	89
22716 DA	84
23086 D	65
23125 D	71
23874 D	65
23977 DA	71
23995 D	71
24017 D	61
24602 DA	83
24603 D	83
24604 D	83
24605 D	83
24609 D	83
24610 D	83
24611 D	83
24612 D	83
24613 D	83
24616 DA	83
24672 D	73
24855 D	71
24916 D	67
24917 D	67
24943 D	51
24961 D	49
24961 D	49
24962 D	49
24964 D	49
24965 DA	49
25043 DA	49
25063 DA	53

HOSE ASSEMBLY AND COUPLER FOR BUCKET LUBRICATOR

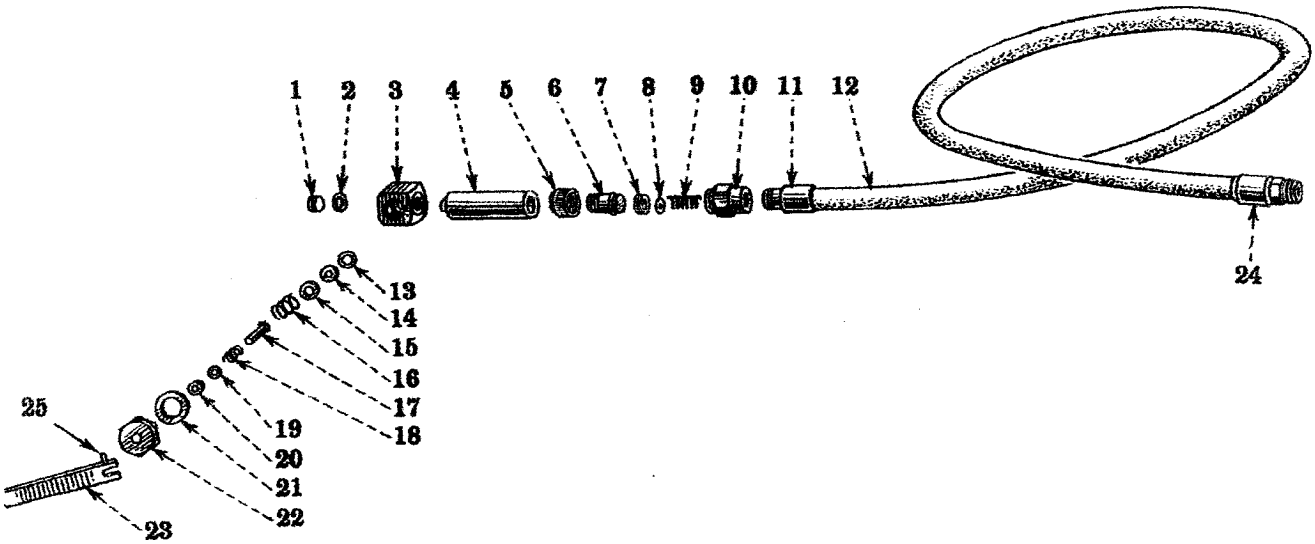

Ref. No.	I H C Part No.	Description
...	36947 D	Swivel.
...	40728 DA	Giant coupler.
...	53192 D	Hose assembly, complete with coupler.
1	40649 D	Nozzle body plug.
2	40657 D	Gasket.
3	40648 D	Giant nozzle body.
4	53187 D	Coupler adapter.
5	40642 D	Swivel collar.
6	40641 D	Swivel stud.
7	40631 D	Cup leather.
8	40703 D	Swivel washer.
9	40713 D	Spring.
10	40646 D	Swivel body.
11	40725 D	Hose fitting.
12	36946 D	Hose (5 ft.).
13	40693 D	Washer.
14	40661 D	Giant packing
15	40636 D	Check seat.
16	40712 D	Spring.
17	40644 D	Plunger.
18	40711 D	Plunger spring.
19	40700 D	Packing washer.
20	40628 D	Packing.
21	40656 D	Gasket.
22	40640 D	Packing gland.
23	53196 D	Handle.
24	40725 D	Hose fitting.
25	40647 D	Pin.

When ordering, always use I H C Part Nos.

BUCKET LUBRICATOR - Continued

ef. o.	I H C Part No.	Description
..	51513 D	Bucket lubricator, complete with hose and coupler.
..	53190 D	Pump assembly.
1	52122 D	Pin.
2	52124 D	Pin.
3	53193 D	Lever handle.
4	52124 D	Pin.
5	51275 D	Latch spring.
6	53194 D	Cover.
7	52126 D	Wing nut.
8	53195 D	Container, complete.
9	51512 D	Bucket lubricator (less hose and coupler).
10	53188 D	Foot step.
11	53186 D	Foot step stud.
12	53189 D	Handle.
13	51274 D	Handle latch.
14	40655 D	Pump outlet.
15	40634 D	Toggle support.
16	40654 D	Bushing.
17	40704 D	Washer.
18	52121 D	Tube adapter.
19	52076 D	Container tube.
20	52120 D	Piston.
21	40698 D	Piston disc.
22	40719 D	Ball.
23	40652 D	Piston.
24	40630 D	Packing.
25	40697 D	Valve disc.
26	40722 D	Ball.
27	40653 D	Foot valve.

BUCKET LUBRICATOR

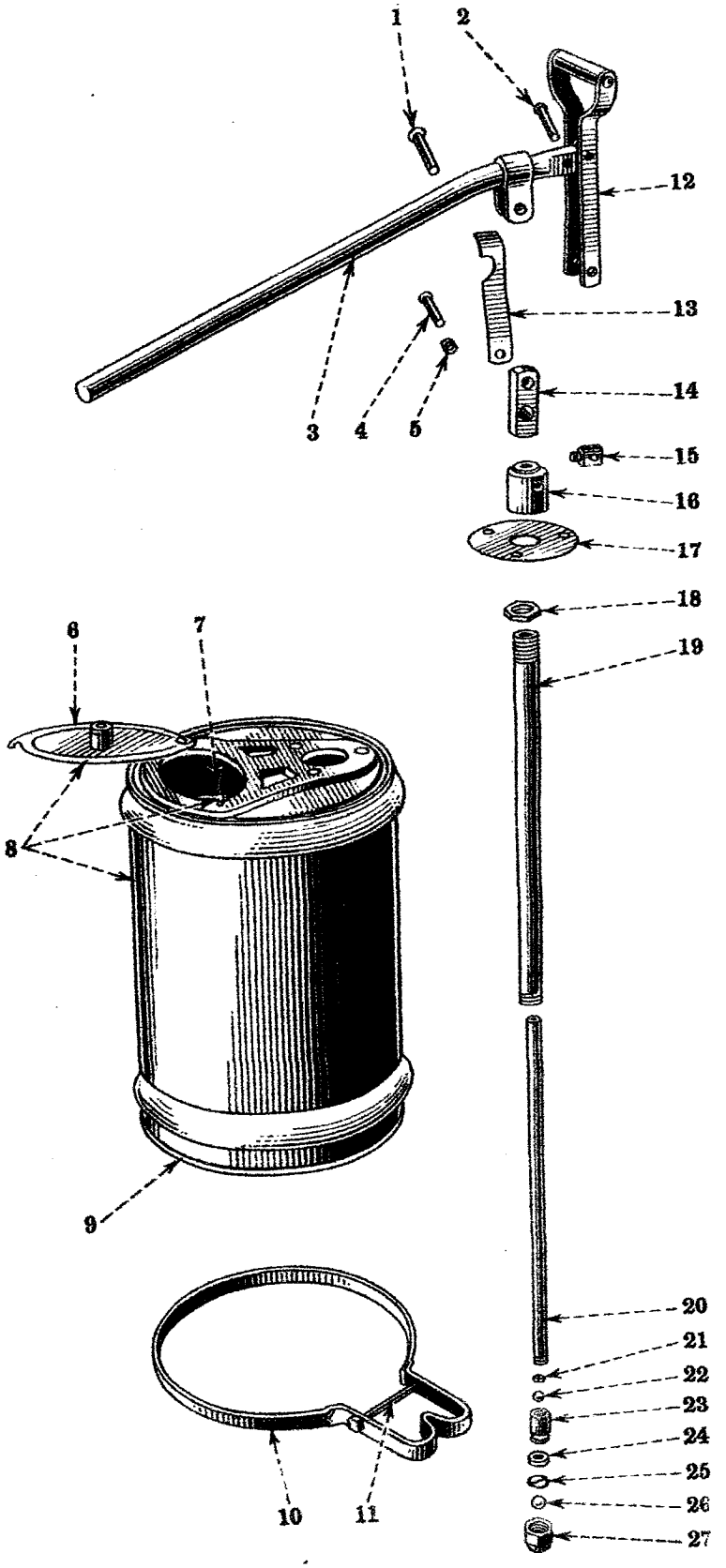

LINCOLN HAND LUBRICATOR

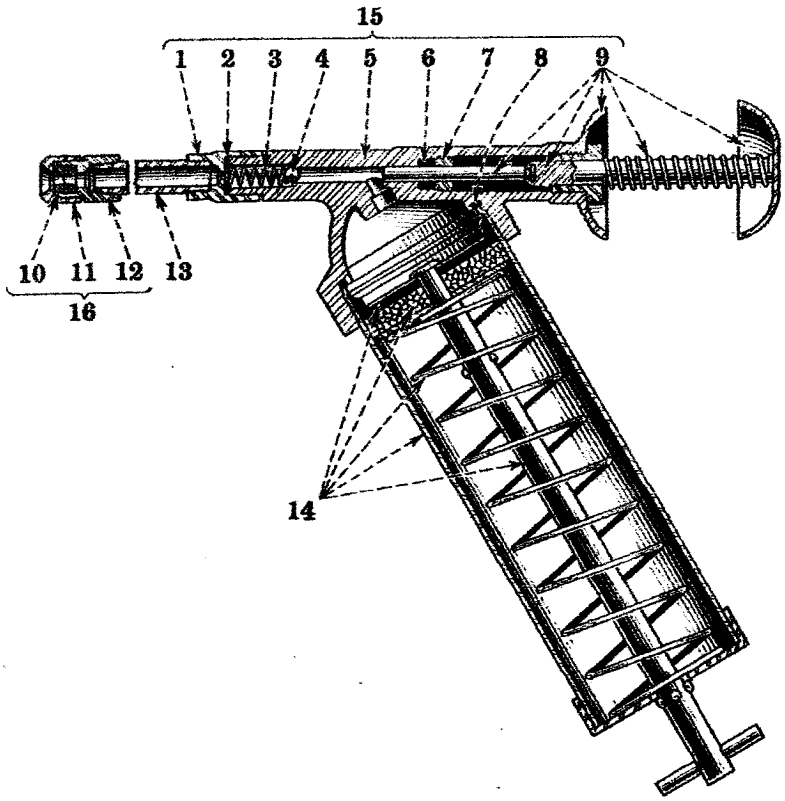

When ordering, always use I H C Part Nos.

Ref. No.	I H C Part No.	Description
...	Q 3794	Lubricator, complete (9 ounce capacity).
1	39875 DX	Adapter with gasket.
2	39655 D	Gasket.
3	39870 D	Check spring.
4	39659 D	Check ball.
5	39868 D	Pump body.
6	39665 D	Packing.
7	39651 D	Packing screw.
8	39654 D	Gasket.
9	39663 D	Plunger assembly.
10	39656 DX	Washer (set of two).
11	39653 D	Nozzle cap.
12	39652 D	Nozzle body.
13	.....	Standard pipe, 6".
14	39661 D	Tube assembly.
15	39662 D	Head assembly.
16	39800 D	Nozzle, complete.

I H C Part No.	Description
5969 D	Steering clutch compressor tool.
.1858 DA	Water pump wrench.
.9289 D	Hexagon socket wrench, 9/16".
.9291 D	Hexagon socket wrench, 5/8".
.9292 D	Hexagon socket wrench, 3/4".
.9323 D	Socket wrench handle (combination offset and tee).
.9324 D	Hexagon socket wrench, 7/8".
.9325 D	Hexagon socket wrench, 13/16".
.9326 D	Hexagon socket wrench, 1".
.9327 D	Hexagon socket wrench, 1-1/8".
.9328 D	Socket wrench set carrying case.
.9329 D	Socket wrench set, complete (in carrying case).
20156 D	Square drain plug socket wrench, 1/2".
20157 D	Square drain plug socket wrench, 11/16".
25462 DA	Stem handled socket wrench, 1-1/32".
25463 D	Stem handled socket wrench handle.
25466 D	Spark plug wrench handle.
32941 D	Spark plug wrench, 31/32".
42633 D	Tool box assembly, complete.
42958 D	Steering clutch compressor tool capscrew.
45578 DA	Breaker point and spark plug gauge, complete.
50092 D	Steering clutch pilot bearing retainer bolt wrench.
51513 D	Bucket lubricator with hose, complete (Lincoln) (50 lb. capacity) (see Detail List on pages 114 to 116).
1326 E	End wrench, 3/4" - 7/8".
H 156	Oil can.
Q 3794	Hand lubricator (9 oz.) (Lincoln).
2583 T	Hammer (1-1/2 lb.).
2584 T	Monkey wrench, 21".
2587 T	Combination slip joint pliers, 8".
2588 T	Screw driver, 5" (wood handle).

MISCELLANEOUS

I H C Part No.	Description
	GAUGES AND INDICATORS
16445 D	Oil pressure indicator tube clip felt.
29898 D	Oil pressure indicator coupling nut (in oil indicator).
29898 D	Oil pressure indicator coupling elbow nut.
41934 D	Oil pressure indicator.
42383 D	Ammeter.
42493 DX	Oil pressure indicator tube coupling elbow (in engine crankcase).
42494 DX	Oil pressure indicator tube (indicator to engine).
48282 D	Oil pressure indicator tube clip.
.....	Round head slotted screw, No. 10 - 24 x 1/2" N.C.
.....	Hex. nut, No. 10 - 24 N.C.
.....	Lockwasher, No. 10.
	CHOKE AND PRIMER CONTROLS
37596 D	Choke rod holder spring clip.
41953 D	Choke control rod and button assembly, complete.
41996 D	Primer control rod and button assembly, complete.
3058 TA	Choke rod holder spring.
	GASKET PACKAGES
52055 D	Chassis gasket package, complete.
52725 D	Engine gasket package, complete.

When ordering, always use I H C Part Nos.

Ref. No.	I H C Part No.	Description
1	57100 DX	Main frame cover, complete.
...	.....	Capscrew, 1/2" x 1-1/4" N.C.
...	.....	Hex. nut, 1/2" N.C.
...	.....	Lockwasher, 1/2".
2	42552 D	Frame cover gasket.
3	5900 DCX	Main frame, complete.
...	.....	Socket head pipe plug, 1-1/2".
4	42000 D	Steering clutch release shaft bushing.
5	41599 D	Steering brake lever outer bushing.
6	41600 D	Steering brake operating shaft plug.
7	46369 D	Reverse idler shaft plug.
8	42548 D	Frame cover dowel pin.
9	41598 D	Engine clutch release shaft bushing.
10	42289 D	Power take-off cover gasket.
11	42288 D	Power take-off cover.
...	.....	Capscrew, 3/4" x 1-1/4".
...	.....	Lockwasher, 3/4".
12	42290 D	Main frame rear inspection cover.
...	.....	Capscrew, 3/8" x 3/4".
...	.....	Lockwasher, 3/8".
13	40998 DA	Track frame pivot shaft set screw.
...	.....	Hex. jam nut, 3/4" N.C.
14	42297 D	Steering clutch lubricating port cover, complete.
15	41598 D	Engine clutch release shaft bushing.
16	42000 D	Steering clutch release shaft bushing.
17	.....	Socket head pipe plug, 1-1/2".
18	41957 D	Transmission end cover stud.
19	41599 D	Steering brake lever outer bushing.
20	41600 D	Steering brake operating shaft plug.
21	40932 D	Bevel gear bearing cage stud.
22	5803 DA	Steering brake inspection cover.
...	.....	Capscrew, 1/2" x 1-1/2".
...	.....	Lockwasher, 1/2".
23	4926 DA	Steering brake inspection cover drain plug.
24	41162 D	Brake pivot shaft cup plug.

MAIN FRAME AND COVERS

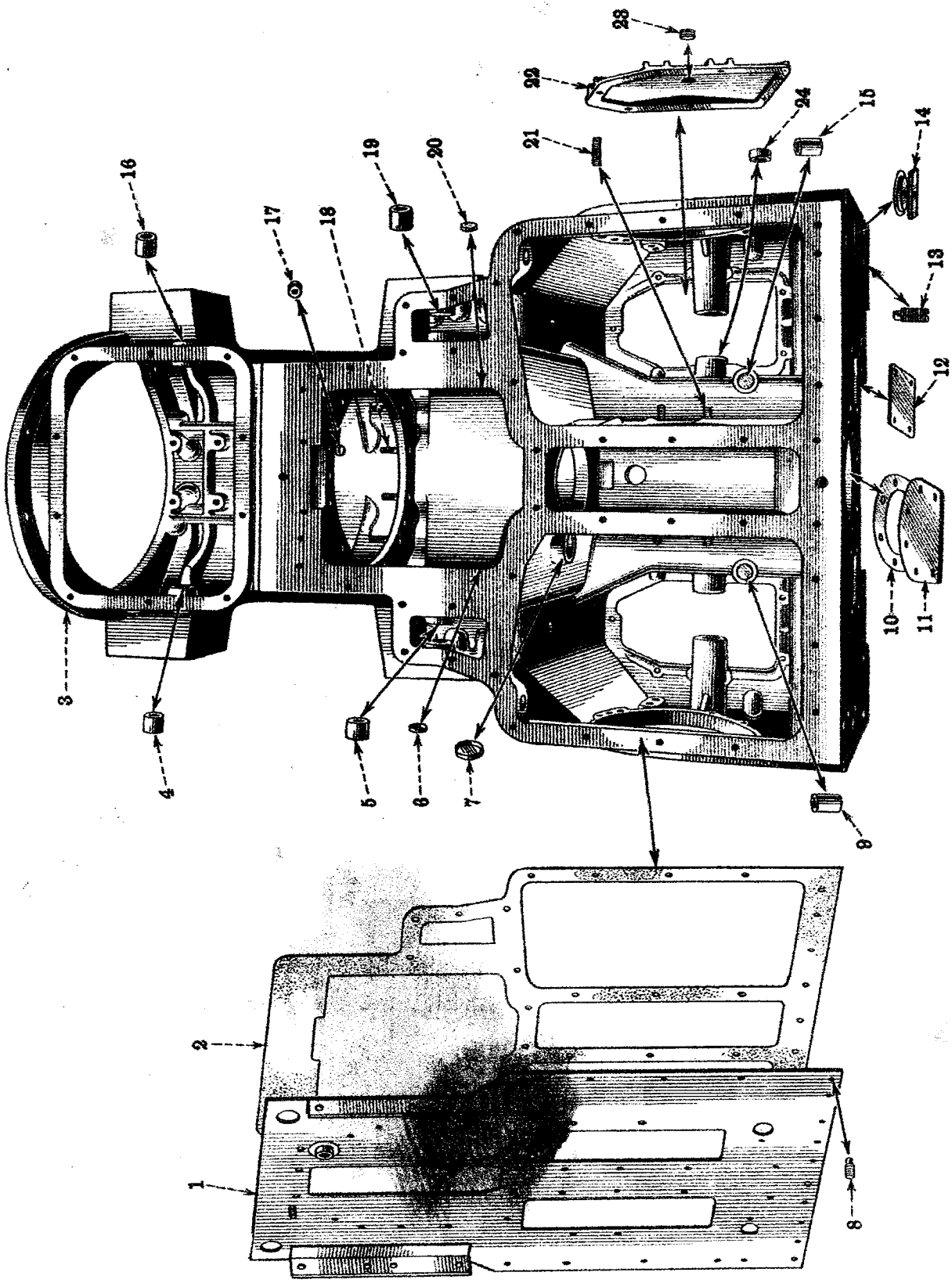

Unnumbered parts in the illustrations are the same as corresponding parts shown with numbers.

SEAT AND FENDERS

Unnumbered parts in the illustrations are the same as corresponding parts shown with numbers.

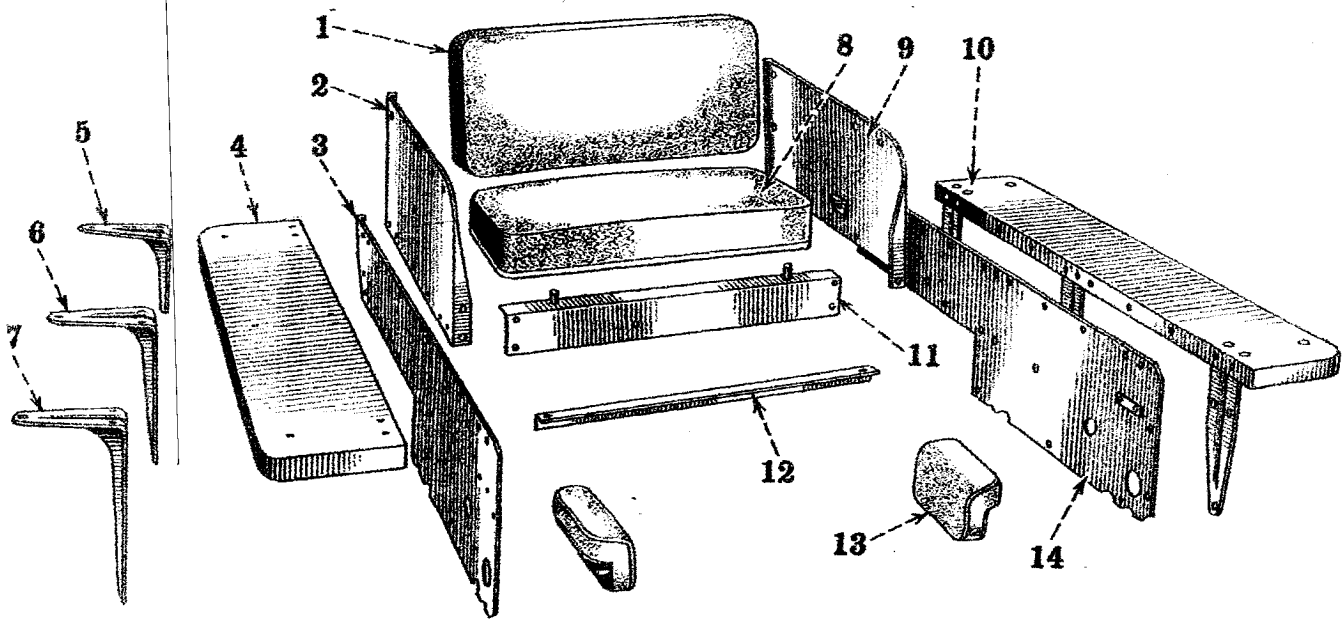

When ordering, always use I H C Part Nos.

Ref. No.	I H C Part No.	Description
1	42635 D	Cushion (back).
2	42628 DX	Seat side sheet, right hand.
...	.....	Capscrew, 3/8"x5/8" N.C.
...	.....	Hex. nut, 3/8" N.C.
...	.....	Lockwasher, 3/8".
3	41536 DX	Side sheet, right hand (fender).
...	.....	Hex. nut, 3/8" N.C.
...	.....	Lockwasher, 3/8".
...	.....	Washer, 13/32" I.D. x 7/8" O.D.
...	.....	Capscrew, 3/8" N.C.x3/4".
4	42623 D	Fender, right hand.
...	.....	Carriage bolt, 3/8" x 5/8" N.C.
...	.....	Capscrew, 3/8"x3/4" N.F.
...	.....	Hex. nut, 3/8" N.C.
...	.....	Hex. nut, 3/8" N.F.
...	.....	Lockwasher, 3/8".
...	.....	Washer, 13/32" I.D. x 7/8" O.D.
5	42626 D	Bracket, rear.
...	.....	Capscrew, 3/8"x1" N.F.
...	.....	Capscrew, 1/2"x1" N.F.
...	.....	Hex. nut, 3/8" N.F.
...	.....	Hex. nut, 1/2" N.F.
...	.....	Lockwasher, 3/8".
...	.....	Lockwasher, 1/2".
6	42625 D	Bracket, center.
...	.....	Capscrew, 3/8" x 1" N.F.
...	.....	Capscrew, 1/2"x3/4" N.F.
...	.....	Hex. nut, 3/8" N.F.
...	.....	Hex. nut, 1/2" N.F.
...	.....	Lockwasher, 3/8".
...	.....	Lockwasher, 1/2".
...	.....	Capscrew, 1/2" N.C.x3/4".

Ref. No.	I H C Part No.	Description
7	42624 D	Bracket, front.
...	.....	Capscrew, 3/8"x1" N.F.
...	.....	Capscrew, 1/2"x1-1/4" N.C.
...	.....	Hex. nut, 3/8" N.F.
...	.....	Lockwasher, 3/8".
...	.....	Lockwasher, 1/2".
...	.....	Capscrew, 1/2" N.C.x3/4"
8	42636 D	Cushion (bottom).
9	42627 DX	Seat side sheet, left hand.
...	.....	Capscrew, 3/8"x5/8" N.C.
...	.....	Hex. nut, 3/8" N.C.
...	.....	Lockwasher, 3/8".
10	42622 D	Fender, left hand.
...	.....	Carriage bolt, 3/8"x5/8" N.C.
...	.....	Capscrew, 3/8"x3/4" N.F.
...	.....	Hex. nut, 3/8" N.C.
...	.....	Hex. nut, 3/8" N.F.
...	.....	Lockwasher, 3/8".
...	.....	Washer, 13/32 I.D. x 7/8" O.D.
11	42629 DX	Seat support, front.
...	.....	Capscrew, 3/8"x3/4" N.F.
...	.....	Hex. nut, 3/8" N.F.
...	.....	Lockwasher, 3/8".
12	42630 D	Seat support angle, rear.
...	.....	Capscrew, 3/8"x3/4" N.F.
...	.....	Hex. nut, 3/8" N.F.
...	.....	Lockwasher, 3/8".
13	52390 D	Seat cushion side.
14	41535 DX	Fender side sheet, left hand.
...	.....	Hex. nut, 3/8" N.C.
...	.....	Lockwasher, 3/8".
...	.....	Washer, 13/32" I.D. x 7/8" O.D.
		Capscrew, 3/8" N.C.x3/4".

TRACK LINK PIN AND SHOE ASSEMBLY

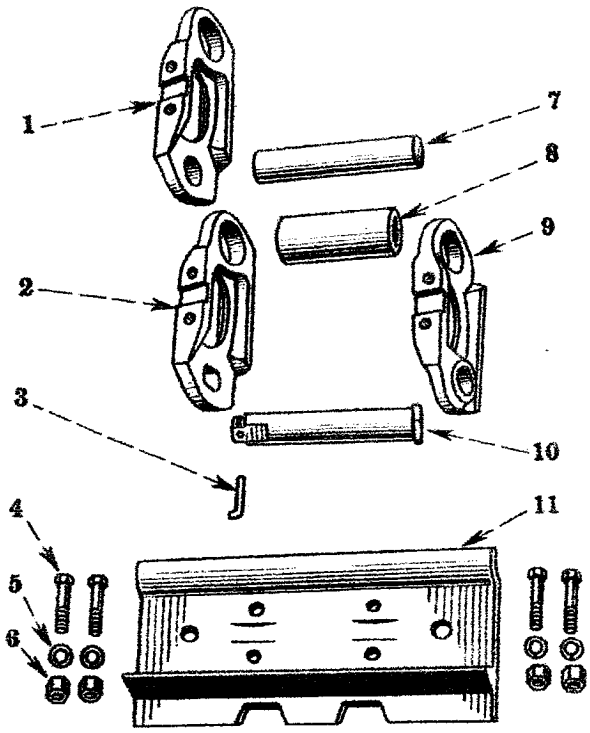

Unnumbered parts in the illustrations are the same as corresponding parts shown with numbers.

Ref. No.	I H C Part No.	Description
...	40983 D	Track, complete.
...	40984 D	Track with 18" track shoes, complete.
1	40977 D	Link, R.H.
2	40978 D	Master link.
3	40980 D	Lock wire.
4	40986 D	Capscrew.
5	.....	Lockwasher, 5/8".
6	42376 D	Nut.
7	40982 D	Pin.
8	40981 D	Bushing.
9	40976 D	Link, L.H.
10	40979 D	Master link pin.
11	40985 D	Shoe, 18".

When ordering, always use I H C Part Nos.

DRAWBAR

When ordering, always use I H C Part Nos.

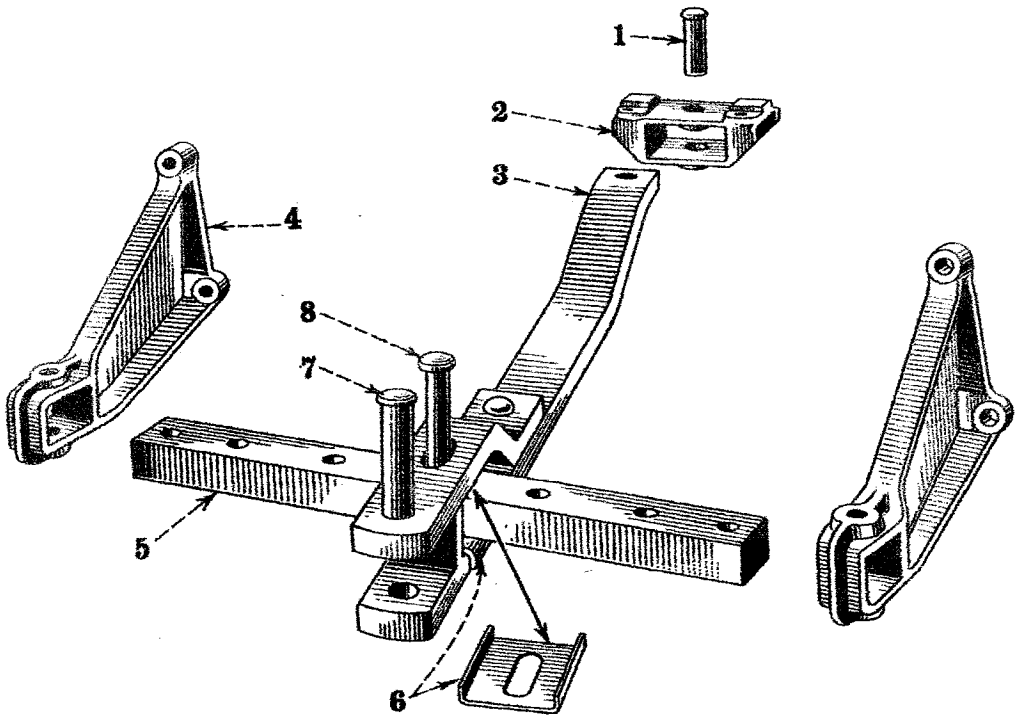

Unnumbered parts in the illustrations are the same as corresponding parts shown with numbers.

Ref. No.	I H C Part No.	Description
1	41589 D	Pivot pin.
2	5831 D	Bracket.
...	.....	Capscrew, 1" x 3" N.C.
...	.....	Lockwasher, 1".
3	41595 D	Drawbar.
...	.....	Round head rivet, 1-1/4" x 5-1/2".
4	5830 DB	Guide bracket.
5	41591 DA	Guide.
...	.....	Capscrew, 1" x 3-3/4" N.C.
6	41592 D	Plate.
7	41593 D	Clevis pin.
...	.....	Cotter, 1/2 x 3".
8	41594 D	Stop pin.
...	.....	Cotter, 1/4 x 2-1/4".

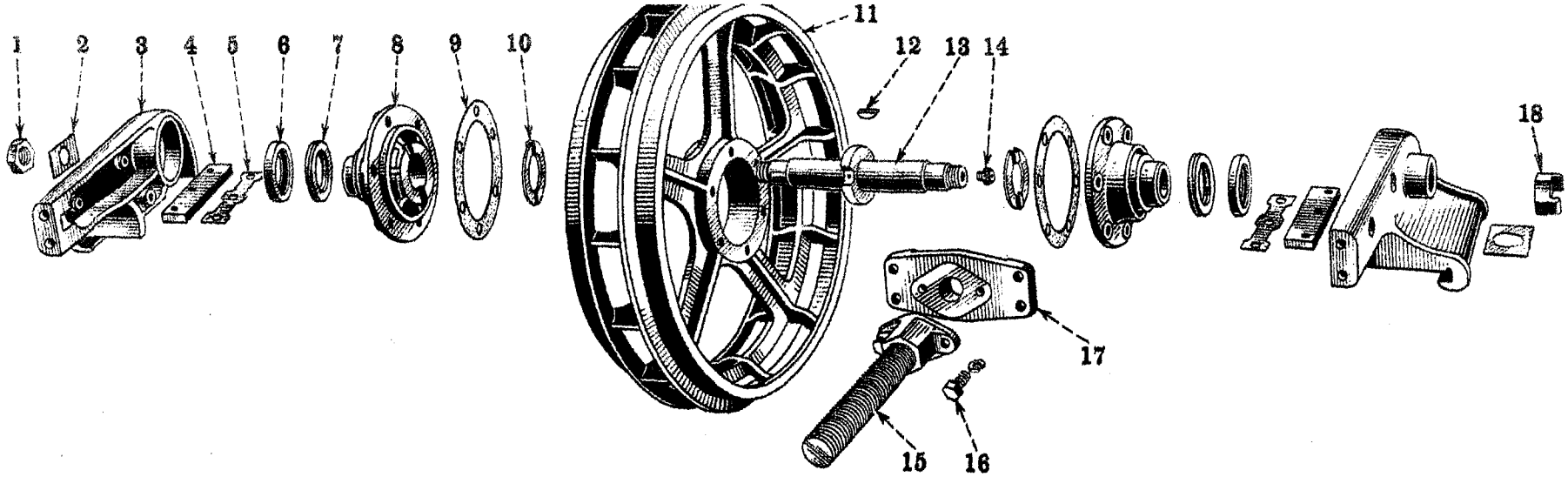

Unnumbered parts in the illustrations are the same as corresponding parts shown with numbers.

Ref. No.	I H C Part No.	Description	Ref. No.	I H C Part No.	Description
1	.....	Hex. jam nut, 1-1/2" N.F.	10	41404 DX	Thrust washer.
2	41866 D	Nut lock.	11	5874 D	Idler.
3	5869 DX	Guide, outer, R.H. and inner, L.H.	12	SA 3215	Key.
	5870 DX	Guide, inner, R.H. and outer, L.H.	13	41868 D	Shaft.
4	41861 D	Retainer.	14	37290 D	Lubricator.
...	.....	Capscrew, 5/8" x 1-3/4" N.F.	15	41853 DA	Adjuster.
5	49104 D	Lock.	...	.....	Cadmium plated lockwasher, 5/8".
6	41862 D	Seal.	16	.....	Bolt, 5/8 x 1-1/2" N.F.
7	41867 DA	Washer.	17	5873 D	Cross plate.
8	5875 DAX	Carrier.	...	.....	Capscrew, 3/4" x 2-1/2" N.C.
...	.....	Capscrew, 5/8" x 4-3/4" N.F.	...	.....	Lockwasher, 3/4".
...	.....	Hex. nut, 5/8" N.F.	18	41865 D	Nut, outer.
...	.....	Lockwasher, 5/8".	...	42971 DX	Carrier bushing, complete (set of 2).
9	41869 D	Gasket.			

When ordering, always use I H C Part Nos.

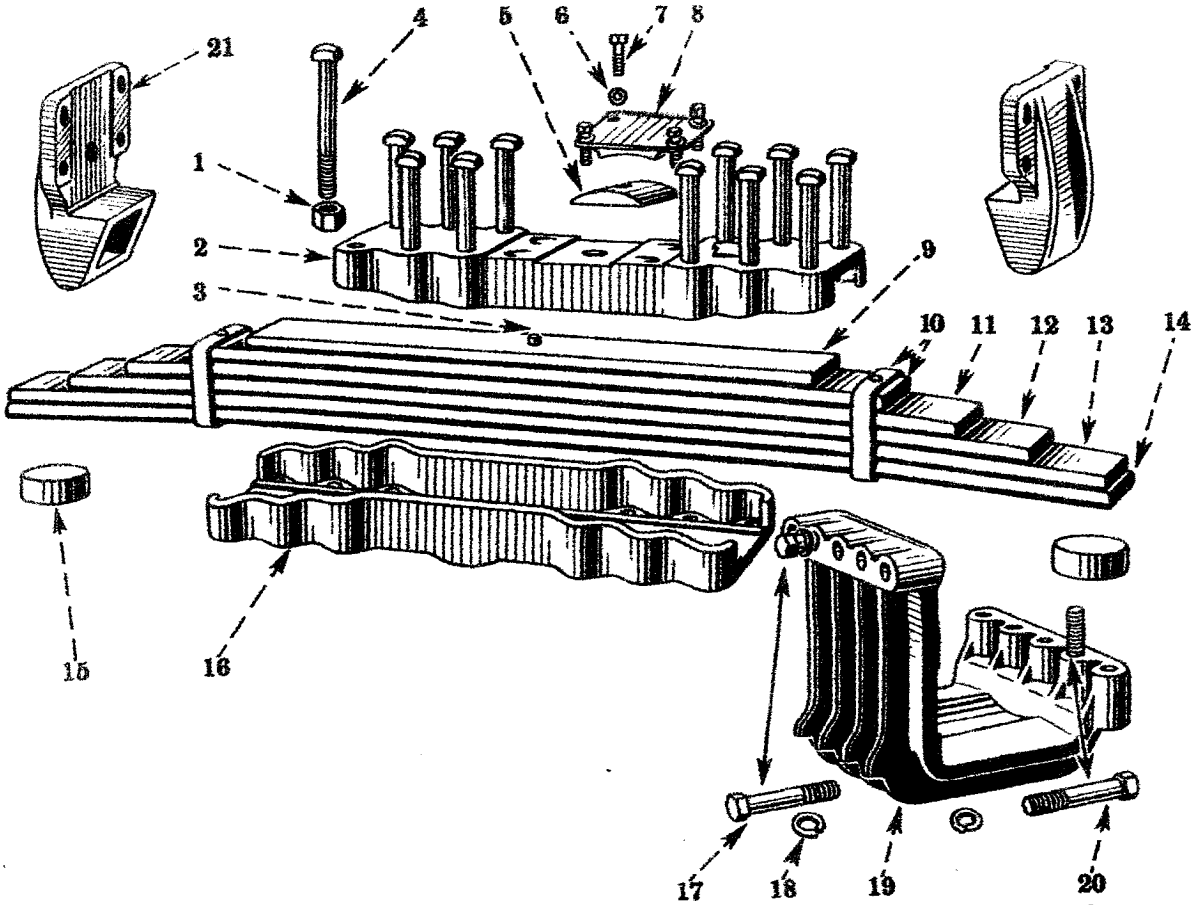

Unnumbered parts in the illustrations are the same as corresponding parts shown with numbers.

When ordering, always use I H C Part Nos.

Ref. No.	IHC Part No. Standard	IHC Part No. Wide Tread	Description
...	41438 D	41439 D	Spring, complete (6 leaves).
1	41442 D	41442 D	Nut.
2	5772 DAX	5773 DAX	Saddle, upper.
3	41458 DX	41458 DX	Center bolt, complete.
...	.....	.....	Hex. nut, 1/2" N.F.
4	41441 D	41441 D	Bolt.
5	41440 D	41440 D	Wearing pad.
...	.....	.....	Ctsk. head rivet, 3/8" x 1-1/2".
6	.....	.....	Lockwasher, 5/8".
7	41444 D	41444 D	Dowel bolt, upper.
8	41443 D	41443 D	Pad, upper.
9	41451 D	41457 D	No. 6 leaf.
10	41450 D	41456 D	No. 5 leaf with clip.
11	41449 D	41455 D	No. 4 leaf.
12	41448 D	41454 D	No. 3 leaf.
13	41447 D	41453 D	No. 2 leaf.
14	41446 D	41452 D	No. 1 leaf.
15	5777 D	5777 D	Guide pad.
16	5774 DA	5775 DA	Saddle, lower.
17	41445 D	41445 D	Dowel bolt.
18	.....	.....	Lockwasher, 7/8".
19	5776 DA	5776 DA	Frame pad, lower.
...	.....	.....	Capscrew, 7/8" x 4" N.C.
...	.....	.....	Capscrew, 7/8" x 4-1/4" N.C.
...	.....	.....	Lockwasher, 7/8".
20	41445 D	41445 D	Dowel bolt.
...	.....	.....	Lockwasher, 7/8".
21	8572 D	8364 D	Bumper pad bracket.
...	.....	.....	Capscrew, 7/8" x 3".
...	.....	.....	Lockwasher, 7/8".

TRACK FRAME DIAGONAL BRACE

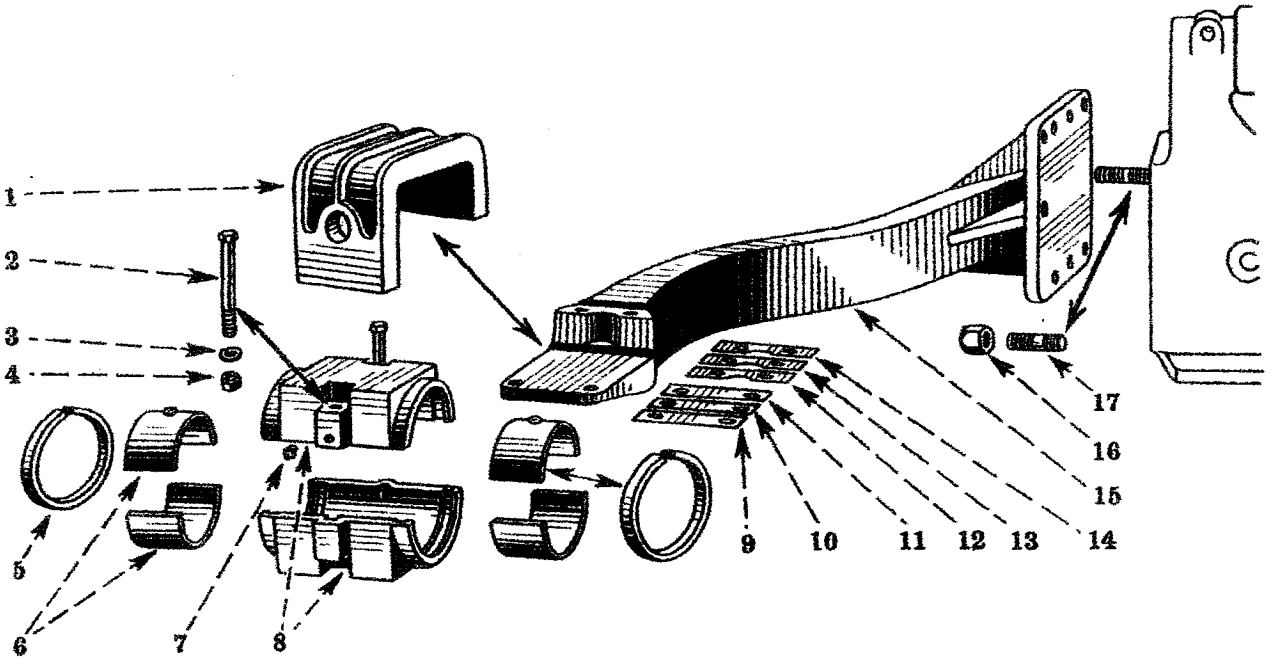

Unnumbered parts in the illustrations are the same as corresponding parts shown with numbers.

When ordering, always use I H C Part Nos.

ef. o.	IHC Part No. Standard	IHC Part No. Wide Tread	Description
1	5897 D	5897 D	Clamp.
..	.....	.....	Capscrew, 3/4" x 2" N.C.
..	.....	.....	Capscrew, 3/4" x 4-1/2" N.C.
..	.....	.....	Lockwasher, 3/4".
2	.....	.....	Bolt, 1/2 x 4" N.F.
3	18868 D	18868 D	Lockwasher, 1/2".
4	.....	.....	Nut, 1/2" N.F.
5	42134 D	42134 D	Felt.
6	42136 DA	42136 DA	Bushing, complete (set of 2).
7	Q 3615	Q 3615	Lubricator.
8	42135 D	42135 D	Bearing, complete (set of 2).
9	42130 D	42130 D	Shim, outer (extra heavy).
0	42131 D	42131 D	Shim, outer (heavy).
1	42132 D	42132 D	Shim, outer (medium).
2	42127 D	42127 D	Shim, inner (extra heavy).
3	42128 D	42128 D	Shim, inner (heavy).
4	42129 D	42129 D	Shim, inner (medium).
5	42003 D	42005 D	Brace, L.H., complete.
	42004 D	42006 D	Brace, R.H., complete.
6	41842 D	41842 D	Nut.
..	.....	.....	Lockwasher, 7/8".
7	41815 D	41815 D	Stud.

When ordering, always use I H C Part Nos.

Ref. No.	I H C Part No.	Description
1	41846 D	Guard.
...	.....	Capscrew, 1/2" x 1" N.C.
...	.....	Lockwasher, 1/2".
...	.....	Washer, 17/32" I.D. x 1" O.D.
...	.....	Capscrew, 1/2" x 1" N.F.
2	5866 DBX	Spring guide, L.H.
	5867 DBX	Spring guide, R.H.
...	.....	Capscrew, 3/4" x 4-1/4" N.F.
...	.....	Capscrew, 7/8" x 1-1/2" N.C.
...	.....	Capscrew, 7/8" x 2-3/4" N.F.
...	.....	Hex. nut, 3/4" N.F.
...	.....	Hex. nut, 7/8" N.F.
...	.....	Lockwasher, 3/4".
...	.....	Lockwasher, 7/8".
3	41845 D	Cover plate.
...	.....	Capscrew, 3/8" x 5/8" N.C.
...	.....	Lockwasher, 3/8".
4	41853 DA	Idler adjuster.
...	.....	Cadmium plated capscrew, 5/8" x 1-1/2" N.F.
...	.....	Cadmium plated lockwasher, 5/8".
5	5863 DBX	Retainer, rear, L.H.
	5864 DBX	Retainer, rear, R.H.
...	.....	Capscrew, 3/4" x 4-1/4" N.F.
...	.....	Capscrew, 7/8" x 1-1/2" N.F.
...	.....	Capscrew, 7/8" x 2-3/4" N.F.
...	.....	Hex. nut, 3/4" N.F.
...	.....	Hex. nut, 7/8" N.F.
...	.....	Lockwasher, 3/4".
...	.....	Lockwasher, 7/8".

Ref. No.	I H C Part No.	Description
6	41843 D	Spring.
7	41800 D	Frame, complete, L.H.
	41801 D	Frame, complete, R.H.
8	5865 D	Retainer, front.
...	.....	Capscrew, 3/4" x 3-1/4" N.F.
...	.....	Lockwasher, 3/4".
9	.....	Nut, 3/4" N.F.
10	41413 DA	Track roller, complete (Nos. 1, 3 and 5).
11	41414 DA	Track roller, complete (Nos. 2 and 4).
12	41409 D	Shield, outer, L.H.
	41410 D	Shield, outer, R.H.
...	.....	Capscrew, 5/8" x 1-3/4" N.F.
...	.....	Hex. nut, 5/8" N.F.
...	.....	Lockwasher, 5/8".
13	41411 D	Shield, inner, L.H.
	41412 D	Shield, inner, R.H.
...	.....	Capscrew, 5/8" x 1-3/4" N.C.
...	.....	Hex. nut, 5/8" N.F.
...	.....	Lockwasher, 5/8".
14	55339 D	Spring adjusting rod.
...	.....	Castle hex. nut, 1-1/2" N.F.
...	.....	Cotter, 3/16" x 2-1/4".
15	54111 D	Spring adjusting rod lockwasher.
16	46887 D	Spring adjusting rod lock nut.

TRACK FRAME AND ROLLERS

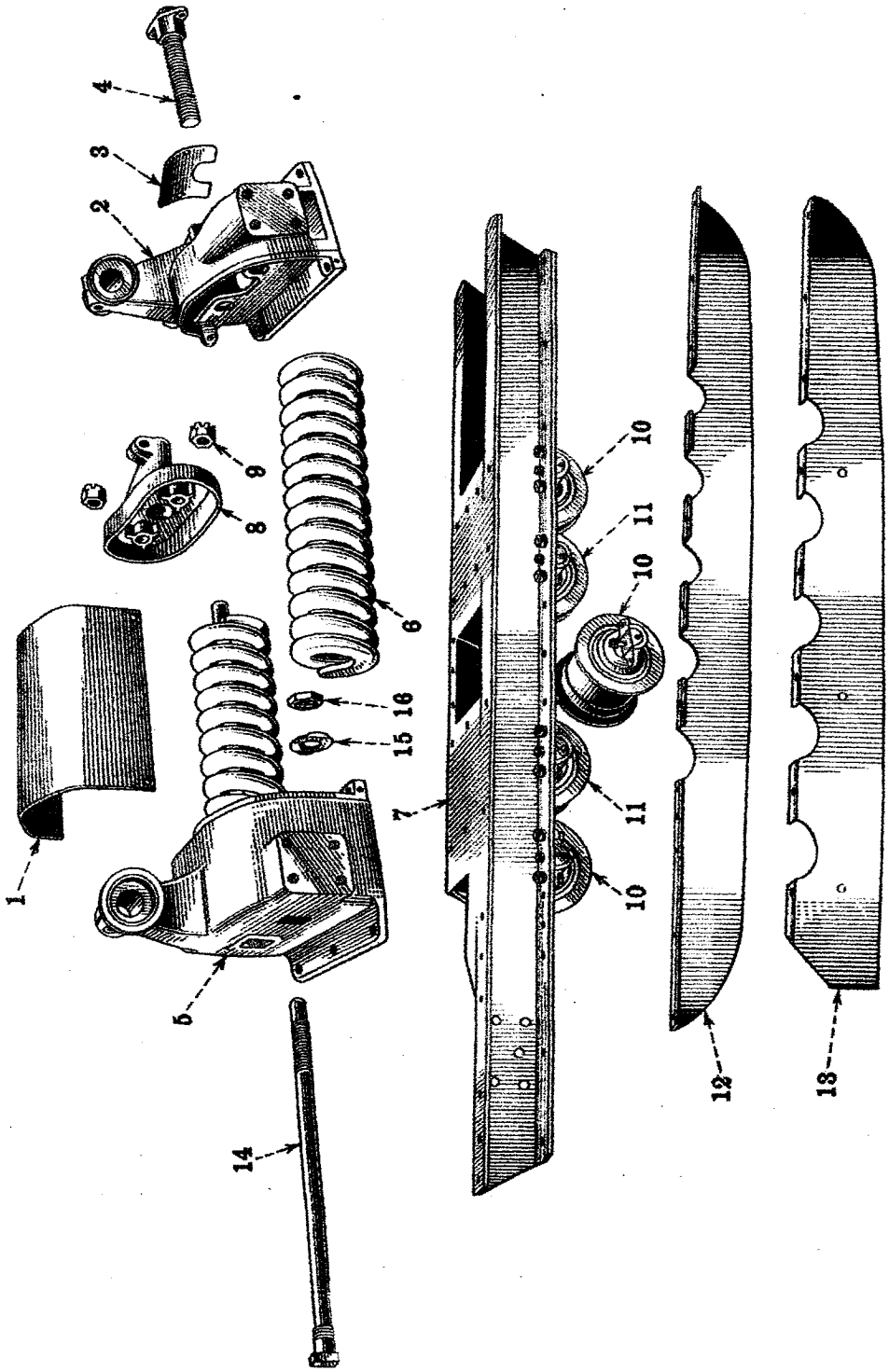

Unnumbered parts in the illustrations are the same as corresponding parts shown with numbers.

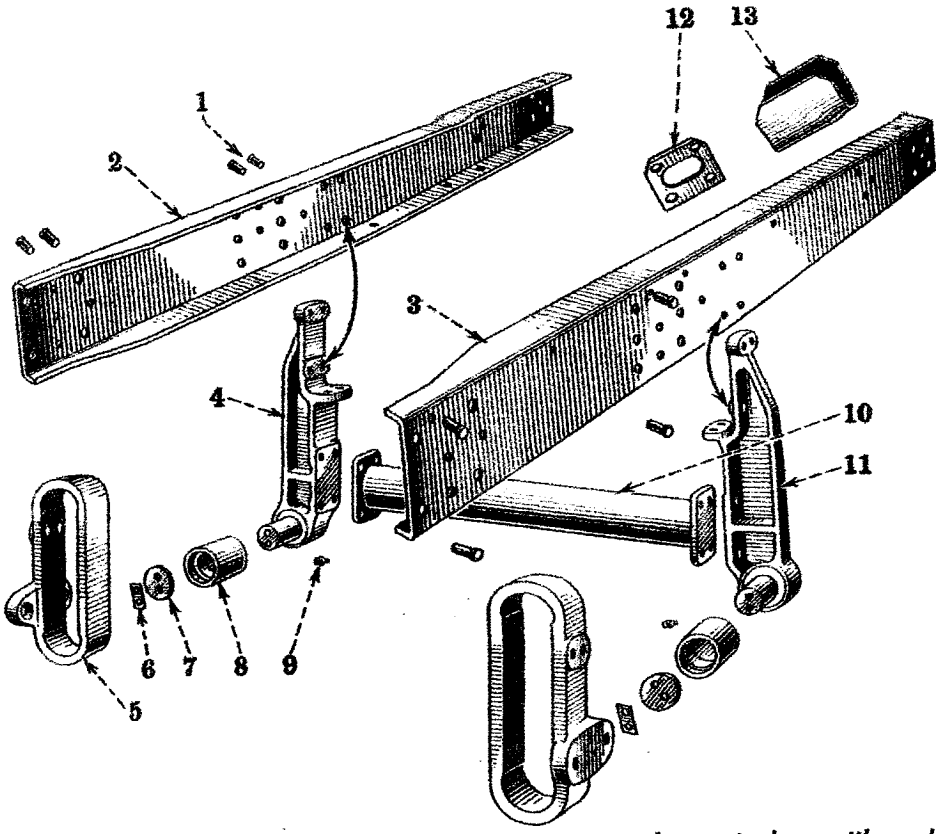

Unnumbered parts in the illustrations are the same as corresponding parts shown with numbers.
When ordering, always use I H C Part Nos.

Ref. No.	IHC Part No. Standard	IHC Part No. Wide Tread	Description
1	42293 D	42293 D	Dowel.
2	52415 D	52415 D	Channel, L.H.
...	.....	.....	Capscrew, 7/8" x 2-1/4" N.C.
...	.....	.....	Lockwasher, 7/8".
...	.....	.....	Capscrew, 3/4" x 2" N.C.
...	.....	.....	Lockwasher, 3/4".
3	52416 D	52416 D	Channel, R.H.
...	.....	.....	Capscrew, 7/8" x 2-1/4" N.C.
...	.....	.....	Lockwasher, 7/8".
...	.....	.....	Capscrew, 3/4" x 2" N.C.
...	.....	.....	Lockwasher, 3/4".
4	5767 DX	5769 DX	Bracket, complete, L.H.
...	.....	.....	Capscrew, 3/4" x 2-5/8" N.F.
...	.....	.....	Capscrew, 3/4" x 2" N.F.
...	.....	.....	Hex. nut, 3/4" N.F.
...	.....	.....	Lockwasher, 3/4".
5	41435 DA	41435 DA	Guide.
...	.....	.....	Capscrew, 7/8" x 2" N.F.
...	.....	.....	Lockwasher, 7/8".
6	35089 D	35089 D	Capscrew lock.
7	41431 D	41431 D	Washer.
8	41430 D	41430 D	Roller.
9	Q 3615	Q 3615	Lubricator.
10	41432 DX	41433 DX	Bracket brace.
...	.....	.....	Capscrew, 3/4" x 2" N.F.
...	.....	.....	Hex. nut, 3/4" N.F.
...	.....	.....	Lockwasher, 3/4".
11	5768 DX	5770 DX	Bracket, complete, R.H.
...	.....	.....	Capscrew, 3/4" x 2-5/8" N.F.
...	.....	.....	Capscrew, 3/4" x 2" N.F.
...	.....	.....	Hex. nut, 3/4" N.F.
...	.....	.....	Lockwasher, 3/4".
12	50180 D	50180 D	Starting crank support plate.
...	.....	.....	Capscrew, 1/2" N.F. x 1-3/8".
...	.....	.....	Hex. nut, 1/2".
13	50181 D	50181 D	Starting crank support clamp.
...	.....	.....	Capscrew, 3/8" N.F. x 1-1/8".
...	.....	.....	Hex. nut, 3/8" N.F.
...	.....	.....	Lockwasher, 3/8".

TRACK IDLER ASSEMBLY

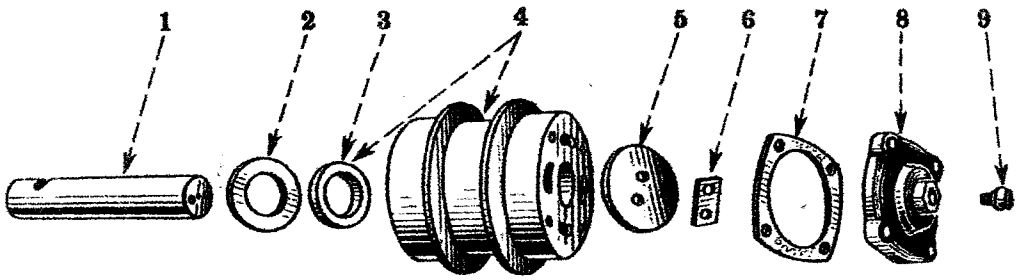

Ref. No.	I H C Part No.	Description
1	40987 D	Shaft.
2	40993 D	Washer.
3	40992 D	Seal.
4	5725 DAX	Idler and seal.
5	40988 D	Washer.
...	.....	Capscrew, 1/2" x 1-1/4" N.F.
6	40991 D	Lock.
7	42101 D	Gasket.
8	5726 D	Cap.
...	.....	Capscrew, 1/2" x 1-5/8" N.C.
...	.....	Lockwasher, 1/2".
9	37290 D	Lubricator.

When ordering, always use I H C Part Nos.

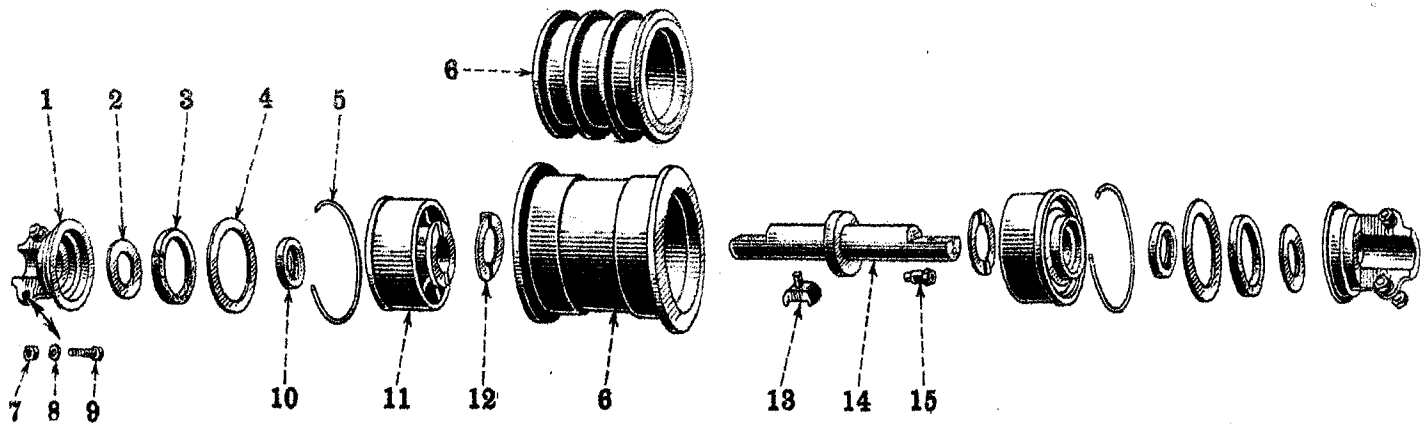

Unnumbered parts in the illustrations are the same as corresponding parts shown with numbers.

Ref. No.	I H C Part No.	Description
1	5735 D	Bracket.
2	40993 D	Washer, outer.
3	41408 D	Washer, center.
4	41405 DA	Washer, inner.
5	41406 D	Snap ring.
6	41400 DA	Roller (double flange).
	41402 DA	Roller (single flange).
7	.....	Nut, 5/8" N.F.
8	.....	Lockwasher, 5/8".
9	37293 D	Bolt.
10	40992 D	Oil seal.
11	5734 DY	Carrier (set).
12	41404 DX	Thrust washer (set).
13	5733 D	Oil scupper.
14	41401 DX	Shaft.
15	41407 D	Lubricator.
...	42972 DX	Carrier bushing set.

When ordering, always use I H C Part Nos.

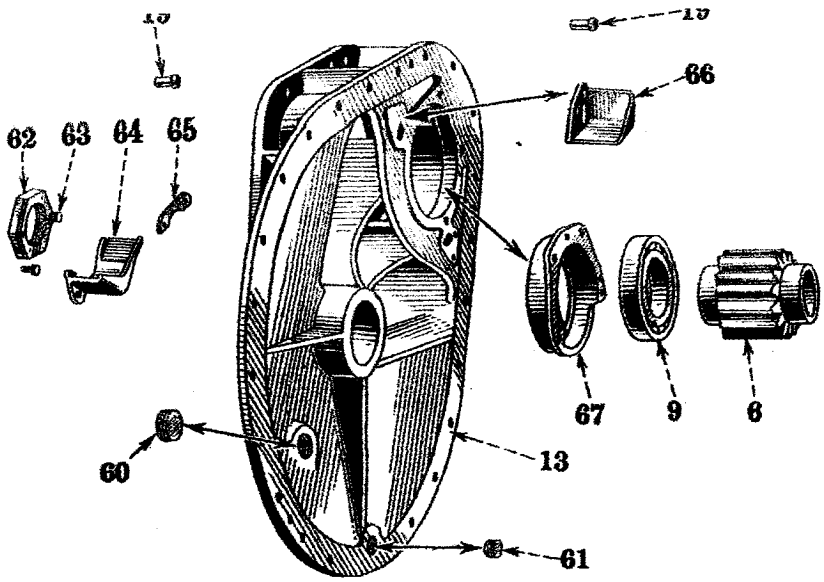

Unnumbered parts in the illustrations are the same as corresponding parts shown with numbers.

Ref. No.	IHC Part No. Standard	IHC Part No. Wide Tread	Description
42	5728 D	5728 D	Bracket.
...	.....	.....	Capscrew, 3/4" x 2" N.F.
...	.....	.....	Capscrew, 3/4" x 2-1/4" N.F.
...	.....	.....	Hex. nut, 3/4" N.F.
...	.....	.....	Lockwasher, 3/4".
43	40996 DA	40997 DA	Track frame pivot shaft.
44	5727 DA	5727 DA	Pivot bearing.
...	.....	.....	Capscrew, 3/4" x 2" N.F.
...	.....	.....	Lockwasher, 3/4".
45	40990 D	40990 D	Gasket (track pivot).
46	5729 D	5729 D	Cap (track pivot).
...	.....	.....	Capscrew, 3/4" x 2" N.C.
47	Q 3615	Q 3615	Lubricator (track pivot).
48	41886 DX	41886 DX	Shield, complete (sprocket).
...	.....	.....	Capscrew, 5/8 x 1-5/8" N.F.
...	.....	.....	Hex. nut, 5/8" N.F.
...	.....	.....	Lockwasher, 5/8".
49	41880 D	41880 D	Bolt lock.
50	5876 D	5876 D	Cage.
...	.....	.....	Capscrew, 1/2" x 1-3/8".
...	.....	.....	Lockwasher, 1/2".
51	16135 H	16135 H	Bearing.
52	41893 D	41893 D	Gasket.
53	41881 D	41881 D	Retainer.
54	41894 D	41894 D	Deflector (track frame).
...	.....	.....	Capscrew, 1/2" x 2" N.F.
...	.....	.....	Lockwasher, 1/2".
56	41618 D	41618 D	Packing.
57	41619 D	41619 D	Spring.
58	41620 D	41620 D	Guard.
...	.....	.....	Capscrew, 3/8" x 3/4" N.C.
...	.....	.....	Lockwasher, 3/8".
59	41614 D	41614 D	Anchor pin.
60	.....	.....	Plug, 1-1/2" (wide tread only).
61	.....	.....	Plug, 3/4" (wide tread only).
62	.....	41464 D	Bearing nut.
63	.....	10722 D	Lock bolt.
64	.....	5784 D	Retainer, lower.
...	.....	.....	Capscrew, 3/8" x 7/8" N.C.
...	.....	.....	Lockwasher, 3/8".
65	.....	41461 D	Retainer, upper.
...	.....	.....	Capscrew, 3/8" x 7/8" N.C.
...	.....	.....	Lockwasher, 3/8".
66	.....	5792 D	Oil trough, L.H.
	.....	5793 D	Oil trough, R.H.
...	.....	.....	Capscrew, 3/8" x 1" N.C.
...	.....	.....	Lockwasher, 3/8".
67	.....	5785 D	Inner bearing cage.
...	.....	.....	Capscrew, 1/2" x 1-1/4" N.C.
...	.....	.....	Lockwasher, 1/2".

Ref. No.	IHC Part No. Standard	IHC Part No. Wide Tread	Description
1	41467 DA	41466 DA	Pinion shaft.
2	5787 DX	5786 DX	Bearing cage.
...	.....	.....	Capscrew, 1/2"x1" N.F.
...	.....	.....	Lockwasher, 1/2".
3	41460 D	41463 D	Gasket.
4	41436 D	41436 D	Seal.
5	42238 D	42239 D	Bearing.
6	41468 DA	41468 DA	Pinion (14 teeth).
7	41462 D	41462 D	Gasket.
8	5782 DA	5782 DA	Cage, outer.
9	16135 H	16135 H	Bearing.
10	41459 D	.....	Washer.
...	.....	.....	Capscrew, 1/2"x1-1/4" N.F.
...	.....	.....	Lockwasher, 1/2".
11	41462 D	41462 D	Gasket.
12	5781 D	5781 D	Cap.
...	.....	.....	Capscrew, 1/2"x1-3/4" N.C.
...	.....	.....	Lockwasher, 1/2".
13	41471 DX	.....	Carrier plate, L.H.
	41472 DX	.....	Carrier plate, R.H.
...	.....	.....	Capscrew, 5/8"x1-1/2" N.C.
...	.....	.....	Lockwasher, 5/8".
...	.....	.....	Ctsk. head pipe plug, 1-1/2".
...	.....	.....	Ctsk. head pipe plug, 3/4".
13	.....	5783 DAX	Carrier plate.
...	.....	.....	Capscrew, 5/8"x1-3/4" N.C.
...	.....	.....	Lockwasher, 5/8".
...	.....	.....	Ctsk. head pipe plug, 1-1/2".
...	.....	.....	Ctsk. head pipe plug, 3/4".
14	41889 D	41889 D	Spacer, short.
15	41877 D	41877 D	Bearing.
16	41900 D	41900 D	Gear (73 teeth) and carrier, complete.
17	41890 D	41890 D	Spacer, long.
18	41884 D	41884 D	Gasket.
19	41901 D	41766 D	Pin.

Ref. No.	IHC Part No. Standard	IHC Part No. Wide Tread	Description
20	5877 DBX	5877 DBX	Cover, complete.
...	.....	.....	Capscrew, 1/2"x1-5/8" N.F.
...	.....	.....	Capscrew, 5/8"x1-5/8" N.F.
...	.....	.....	Capscrew, 5/8" x 2" N.C.
...	.....	.....	Hex. nut, 1/2" N.F.
...	.....	.....	Hex. nut, 5/8" N.F.
...	.....	.....	Lockwasher, 1/2".
...	.....	.....	Lockwasher, 5/8".
...	.....	.....	Capscrew, 1/2"x1-3/4" N.F.
...	.....	.....	Capscrew, 5/8"x1-7/8" N.F.
21	41605 D	41605 D	Retainer.
...	.....	.....	Capscrew, 1/4"x5/8" N.C.
...	.....	.....	Lockwasher, 1/4".
22	41604 D	41604 D	Diaphragm.
23	41610 D	41610 D	Guard, complete.
...	.....	.....	Capscrew, 3/8"x3/4" N.C.
...	.....	.....	Lockwasher, 3/8".
24	5833 D	5833 D	Pressure plate.
25	41609 D	41609 D	Packing.
26	41606 D	41606 D	Deflector.
27	41882 D	41882 D	Carrier.
28	40999 D	40999 D	Ring (track frame pivot shaft).
29	.....	.....	Nut, 5/8".
30	42283 D	42283 D	Bolt.
...	.....	.....	Slotted castle nut, 5/8" N.F.
...	.....	.....	Cotter, 1/8" x 1-1/4".
31	41902 D	.....	Pin.
32	52419 D	52419 D	Anchor pin.
33	41608 D	41608 D	Spring.
34	41876 D	41876 D	Bolt.
...	.....	.....	Hex. nut, 7/8" N.F.
35	5878 D	5878 D	Sprocket (29 teeth).
36	41878 D	41878 D	Lock.
37	41879 D	41879 D	Nut.
38	41893 D	41893 D	Gasket.
39	5834 D	5834 D	Pressure plate.
40	41612 D	41612 D	Diaphragm.
41	41613 D	41613 D	Retainer.
...	.....	.....	Capscrew, 1/4"x5/8" N.C.
...	.....	.....	Lockwasher, 1/4".

for parts used with Wide Tread Att.

The same reference numbers are used where parts have the same description, but carry different part numbers.

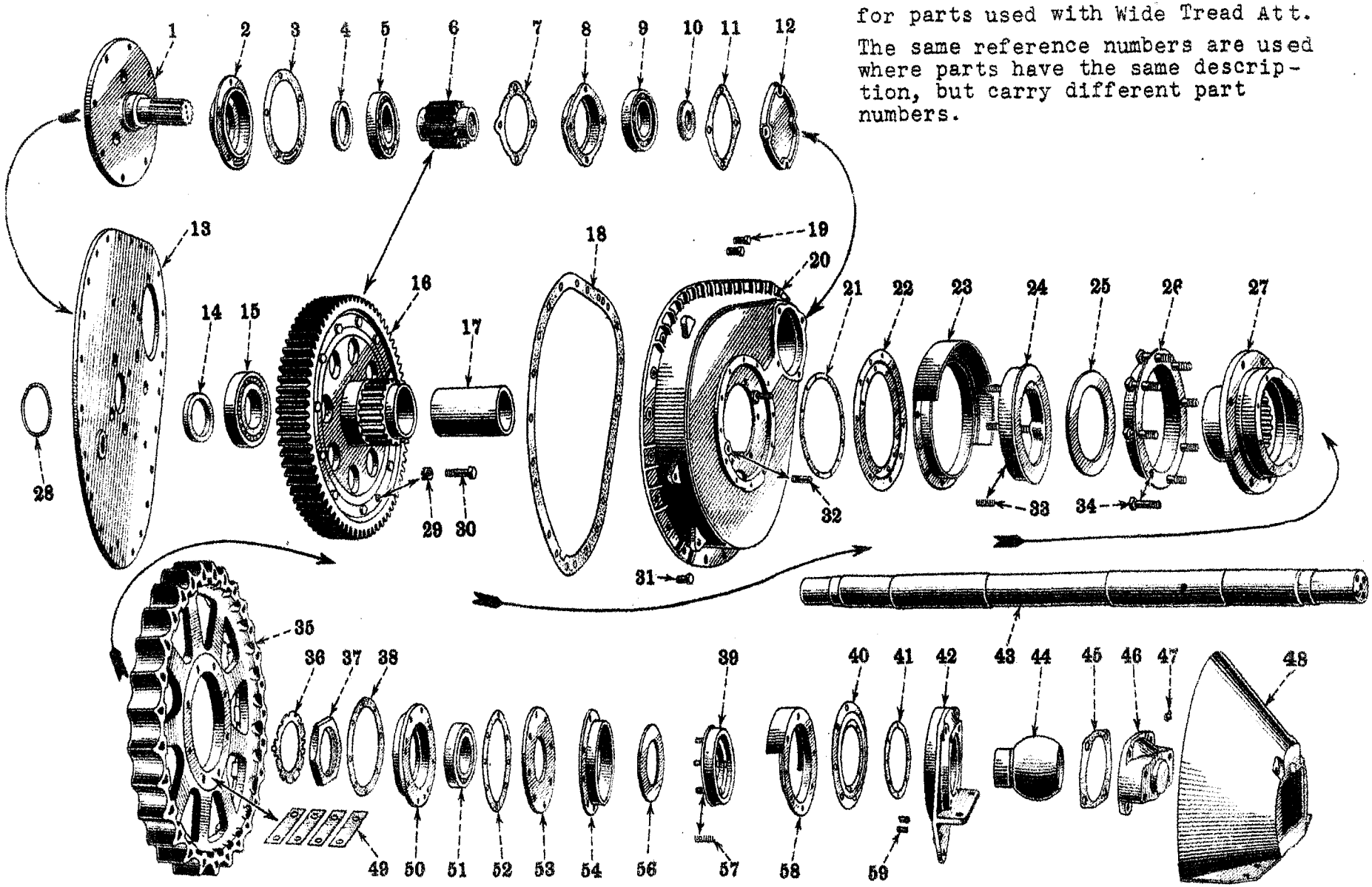

Unnumbered parts in the illustrations are the same as corresponding parts shown with numbers.

Don't order parts from the illustrations only; refer to the list also.

Ref. No.	I H C Part No.	Description
...	41480 D	**Brake band assembly, complete.**
1	41479 DX	Band, rear, complete.
2	41484 DA	Pin.
...	.....	Cotter, 1/8" x 1".
3	41478 DX	Band, center, complete.
...	.....	Round head rivet, 1/4"x3/8".
4	20841 D	Key for lever, inner.
5	41519 D	Seal.
6	15041 H	Rod pin.
...	.....	Cotter, 1/8" x 3/4".
7	41512 D	Rod, outer, cp.
...	.....	Cotter, 3/32"x3/4".
8	5818 D	Pawl.
9	41523 D	Pawl stud.
...	.....	Lockwasher, 1/2".
...	.....	Cotter, 1/8"x3/4".
10	41935 D	Pawl spring.
...	.....	Capscrew, 5/16"x3/4" N.C.
...	.....	Hex. jam nut, 5/16" N.C.
11	41521 D	Pawl link, L.H.
	41522 D	Pawl link, R.H.
...	.....	Cotter, 1/16" x 1/2".
12	5815 D	Pedal pad.
13	41524 D	Swivel.
...	.....	Hex. nut, 3/4" N.F.
...	.....	Lockwasher, 3/4".
14	5816 DA	Pedal, L.H.
	5817 DA	Pedal, R.H.
15	41508 D	Pivot pin.
16	5812 D	Adjusting knob.
17	41483 D	Brake band lining.
18	41496 D	Washer.
19	.....	Nut, 5/8".
20	41497 D	Spring.
21	41501 D	Pin.
22	41499 D	Bolt.
...	.....	Hex. nut, 5/8" N.F.
23	5801 DX	Lever, complete.
24	15041 H	Pin.
...	.....	Cotter, 1/8" x 3/4".
25	41514 D	Rod, inner, complete.
26	41494 D	Anchor spring.
27	.....	Nut, 5/8" N.C.
28	41495 D	Set screw.
29	.....	Washer.
30	Q 3621	Pedal shaft lubricator.
31	41515 D	Release spring.
32	41999 D	Pin, upper.
...	.....	Cotter, 1/8" x 3/4".
33	5813 D	Lever, inner.
...	.....	Capscrew, 1/2" x 1-5/8" N.C.
...	.....	Lockwasher, 1/2".
34	41517 D	Lever, outer, L.H.
	41518 D	Lever, outer, R.H.
35	41509 D	Washer.
36	41510 D	Spring.
37	41520 D	Pedal shaft.
38	41477 DX	Band, front, complete.
39	21406 H	Lining rivet (.186 x 3/8").
	21444 H	Lining rivet (.186 x 1/2").
40	41498 D	Adjusting bolt spacer.
41	41500 D	Pin.
...	.....	Cotter, 3/16 x 1-1/2".
42	41491 D	Shaft stud.
...	.....	Lockwasher, 1/2".
43	41492 D	Pivot shaft.
44	41493 D	Bushing.
45	43664 D	Anchor.
...	.....	Hex. jam nut, 1" N.C.
...	.....	Lockwasher, 1".

STEERING BRAKES AND CONTROLS

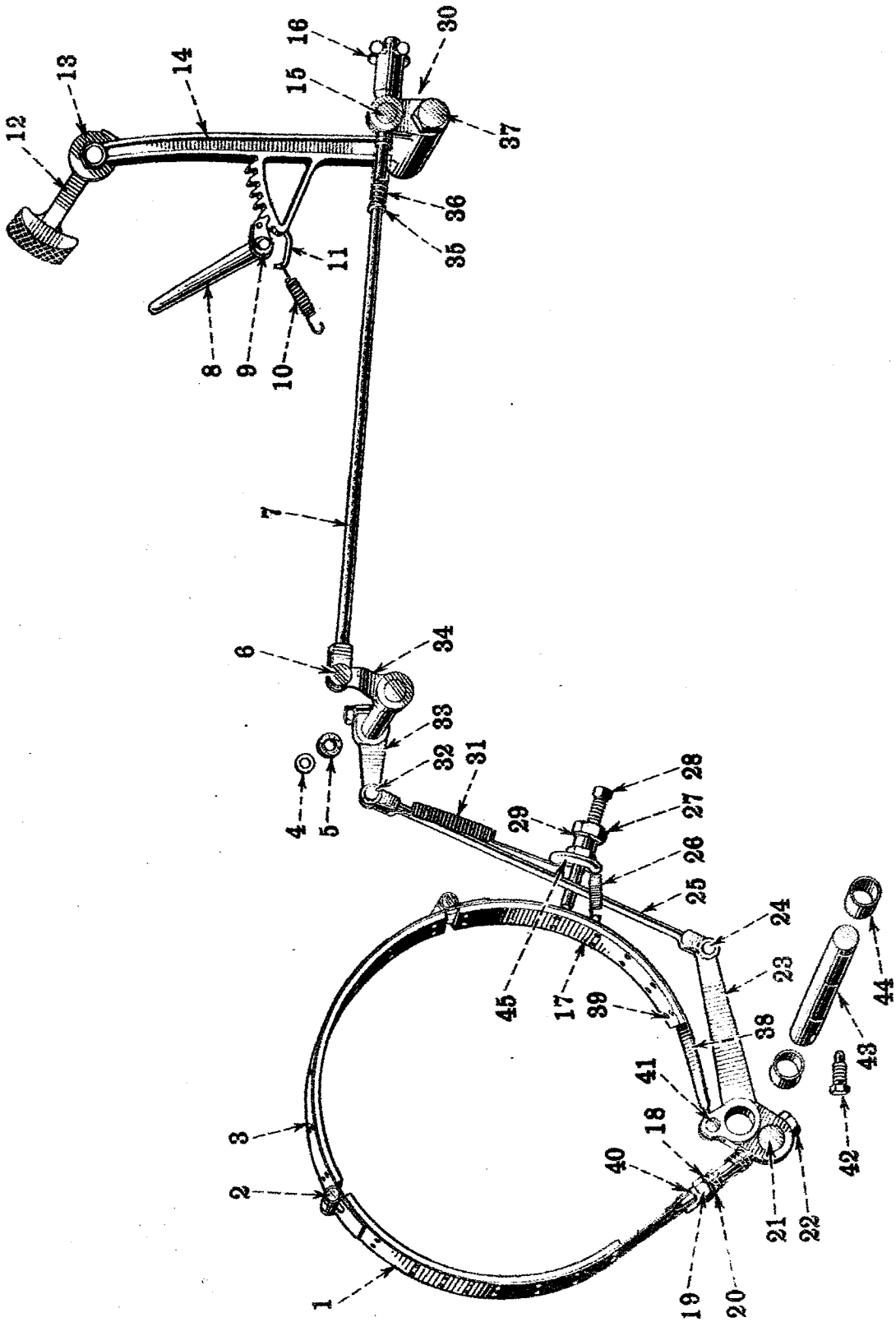

Unnumbered parts in the illustrations are the same as corresponding parts shown with numbers.

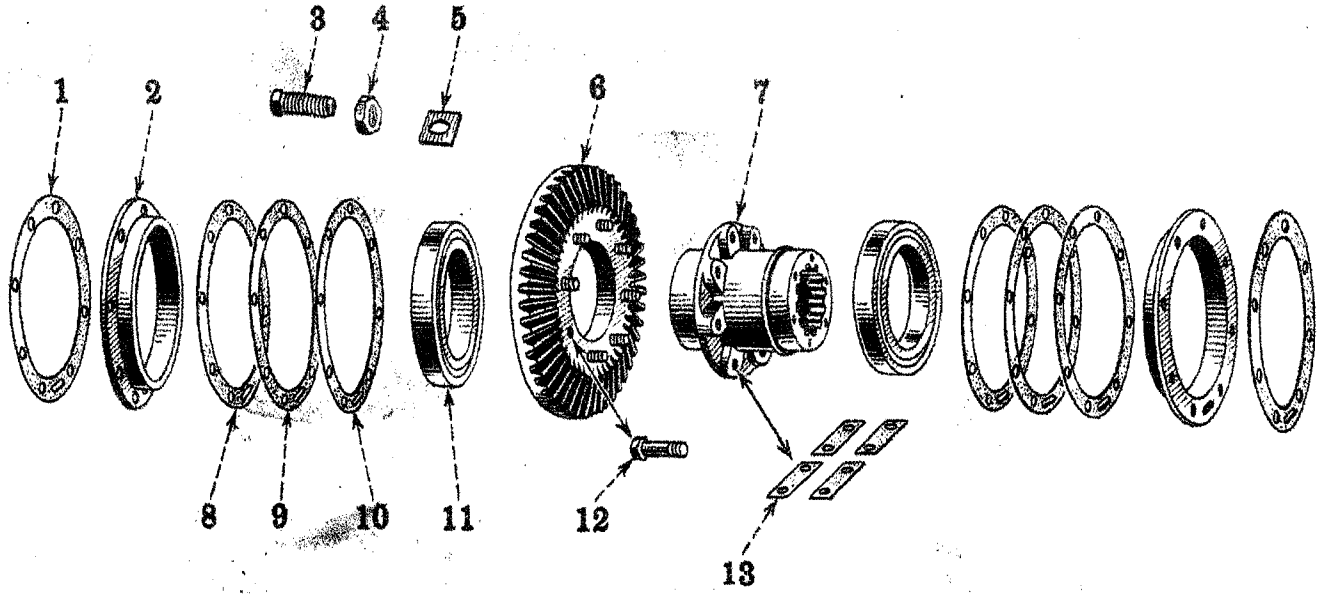

Unnumbered parts in the illustrations are the same as corresponding parts shown with numbers.

Ref. No.	I H C Part No.	Description	Ref. No.	I H C Part No.	Description
1	40929 D	Gasket.	12	46643 D	Bolt.
2	5720 D	Cage.	13	46642 D	Lock.
3	40930 D	Set screw.	...	8742 DX	Drive bevel gear bearing cage cap, left hand.
4	.....	Nut, 1-1/8".	...	8743 DX	Drive bevel gear bearing cage cap, right hand.
5	40931 D	Screw lock.	...	.....	Capscrew, 5/8" x 1-5/8" N.C.
6	40933 D	Gear (47 teeth).	...	.....	Lockwasher, 5/8".
7	5719 D	Hub.	...	.....	Capscrew, 3/8" x 1-1/4" N.F.
8	40927 D	Shim, light.	...	.....	Capscrew, 5/8" x 1-3/8" N.F.
9	40926 D	Shim, medium.	...	.....	Hex. nut, 5/8" N.F.
10	40925 D	Shim, heavy.	...	.....	Lockwasher, 3/8".
11	42240 D	Bearing.			

When ordering, always use I H C Part Nos.

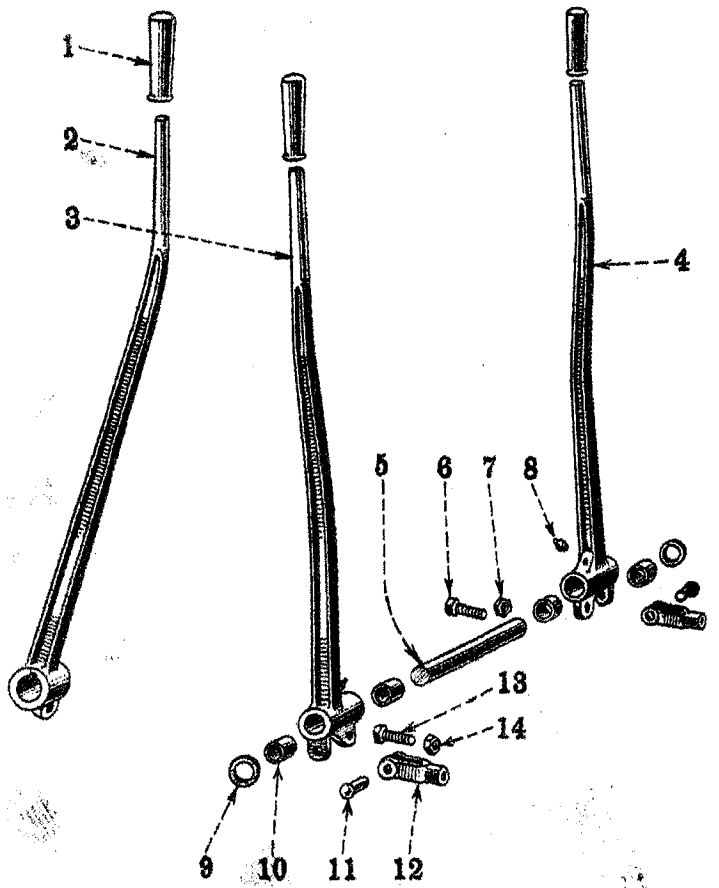

Ref. No.	I H C Part No.	Description
1	41597 D	Handle.
2	5832 DX	Engine clutch lever.
3	8683 DX	Lever with handle.
...	.....	Capscrew, 1/2" x 1-1/2" N.C.
...	.....	Hex. jam nut, 1/2" N.C.
4	8684 DX	Lever with handle.
...	.....	Capscrew, 1/2" x 1-1/2" N.C.
...	.....	Hex. jam nut, 1/2" N.C.
5	56012 D	Shaft.
...	.....	Capscrew, 1/2" x 2" N.C.
...	.....	Lockwasher, 1/2".
...	.....	Cotter, 5/16" x 1-1/4".
6	46368 D	Screw.
...	.....	Hex. jam nut, 1/2" N.F.
7	.....	Nut, 1/2".
8	Q 3615	Lubricator.
9	20332 D	Washer.
10	42175 D	Bushing.
11	15041 H	Pin.
...	.....	Cotter, 3/32" x 3/4".
12	15033 H	Yoke.
13	46368 D	Screw.
14	.....	Nut, 1/2".
...	8679 D	Steering clutch release lever.
...	41768 D	Steering clutch release lever return spring anchor.
...	.....	Lockwasher, 1/2".
...	45794 D	Steering clutch release lever retaining washer.
...	56004 D	Steering clutch release lever return spring.
...	56015 D	Steering clutch operating rod, complete.

Unnumbered parts in the illustrations are the same as corresponding parts shown with numbers.

When ordering, always use I H C part nos.

Ref. No.	I H C Part No.	Description
1	41694 D	Oil level rod.
2	41597 D	Handle.
3	5938 DAX	Lever with handle.
...	.....	Capscrew, 1/2" x 1-5/8" N.C.
...	.....	Lockwasher, 1/2".
4	.....	Washer, 29/32 x 1-3/8".
5	7220 T	Key.
6	42498 D	Seal.
...	.....	Washer, 29/32" I.D. x 1-3/8" O.D.
7	42513 D	Shaft assembly.
8	8686 DX	Housing, complete.
...	.....	Capscrew, 3/8" x 3/4" N.C.
...	.....	Capscrew, 1/2" x 1-1/2" N.C.
...	.....	Lockwasher, 3/8".
...	.....	Lockwasher, 1/2".
9	42511 D	Gasket.
10	42516 D	Second and third shift rail.
11	53717 D	Lever ball.
12	42512 DAX	Lever with ball.
13	11373 D	Stop, upper.
...	.....	Round head rivet, 3/16" x 1-1/4".
14	29547 D	Spring.
15	17700 D	Stop, lower.
16	42496 DX	Shield, complete.
17	.....	Rivet, 3/16" x 1-1/4".
18	13115 D	Plug.
19	40466 DX	Shaft, small.
20	40465 DX	Shaft, large.
21	13115 D	Plug.
22	41664 D	Nut.
23	41665 D	Lock.
24	41657 D	Flange.
25	5841 DX	Retainer, front.
...	.....	Capscrew, 3/8" x 1" N.C.
...	.....	Lockwasher, 3/8".
26	52348 D	Oil seal.
27	41666 D	Gasket.
	23276 H	Bearing, front (N.D.) (optional).
28	ST 223	Bearing, front (IHC) (optional).
29	41690 D	Spacer.
30	5846 DX	Cover.
...	.....	Capscrew, 1/2" x 1-1/2" N.C.
...	.....	Hex. nut, 1/2" N.C.
...	.....	Lockwasher, 1/2".
31	41668 DA	Gasket.

Ref. No.	I H C Part No.	Description
	41513 V	Bearing, rear (N.D.) (optional).
32	ST 228	Bearing, rear (IHC) (optional).
33	41643 D	Shaft and gear (29 teeth).
34	ST 227	Bearing.
35	41654 DX	Spline shaft.
36	42517 D	Guide, front.
...	.....	Ctsk. head rivet (No. 9 x 1/2").
...	.....	Capscrew, 3/8" x 1" N.C.
37	42506 D	Lock.
38	42514 D	Shift rail.
39	47823 D	Spring.
40	4596 D	Poppet ball.
41	41671 D	Bushing.
42	41644 D	Gear (42 teeth).
43	41649 D	Gear (33 and 37 teeth).
44	41653 D	Gear (27 teeth).
45	53899 D	Retainer, rear.
...	.....	Capscrew, 3/8" x 1-1/8" N.C.
...	.....	Lockwasher, 3/8".
46	ST 227	Bearing.
47	40888 D	Ring.
48	8389 D	Bearing cage, rear.
49	42518 D	Guide, rear.
...	.....	Ctsk. head rivet, No. 9 x 1/2".
...	.....	Capscrew, 3/8" x 1" N.C.
50	42515 D	Low and reverse shift rail.
51	42506 D	Lock.
...	.....	Capscrew, 3/8" x 1" N.C.
52	41670 D	Retainer.
...	.....	Capscrew, 3/8" x 1" N.C.
...	.....	Capscrew, 1/2" x 1-1/4" N.F.
53	41660 D	Gasket.
54	18585 DA	Pin.
55	41652 D	Stud.
...	.....	Hex. nut, 1/2" N.F.
...	.....	Lockwasher, 1/2".
56	10690 V	Bearing.
57	21572 D	Bearing retainer bolt.
...	.....	Castle hex. nut, 3/8" N.F.
...	.....	Cotter, 3/32" x 3/4".

Ref. No.	I H C Part No.	Description
58	[redacted]	Idler gear (23 and 36 teeth).
59	41682 D	Bearing.
60	55422 D	Bearing retainer, rear.
61	52438 D	Idler shaft.
63	8334 D	Oil scoop.
64	21572 D	Bolt.
...	.....	Castle hex. nut, 3/8" N.F.
...	.....	Cotter, 3/32" x 3/4".
65	41681 D	Bearing.
66	41651 D	Idler gear (31 and 38 teeth).
67	41681 D	Bearing.
68	41658 D	Washer.
69	5842 D	Retainer, front.
...	.....	Capscrew, 1/2" x 1-5/8" N.C.
...	.....	Lockwasher, 1/2".
[illegible]	41662 D	Gasket.
[illegible]	21677 D	Washer.
...	.....	Capscrew, 1/2" x 1-1/4" N.F.
...	.....	Lockwasher, 1/2".
...	68T 219Y	Bevel pinion shaft bearing, front (IHC) (optional).
72	52962 D	Bevel pinion shaft bearing, front (N.D.) (optional).
73	5838 DA	Bearing cage, front.
74	41678 D	Shim, heavy.
75	41679 D	Shim, medium.
76	41680 D	Shim, light.
77	5845 D	Spacer, front.
78	5837 DX	Gear (47 teeth).
79	41672 DR	Bushing.
80	5843 D	Sleeve.
81	41661 D	Key.
82	41646 D	Gear (59 teeth).
83	41667 D	Spacer.
84	41645 D	Gear (45 and 49 teeth).
85	41663 D	Retainer, rear.
...	.....	Capscrew, 3/8" x 1-1/4" N.C.
...	.....	Lockwasher, 3/8".
86	53009 D	Bearing.
87	41648 DA 41675 DA	Pinion shaft (12 teeth). Pinion and shaft assembly.
88	5839 DA	Bearing cage, rear.
89	41647 DB	Gear (40 teeth).
90	20887 D	Swivel housing shim bushing.
91	52893 D	Reverse gear spacer.
...	21491 N	Hi and low range [illegible] retainer bolt lock[illegible]

Unnumbered parts in the illustrations are the same as corresponding parts shown with numbers.

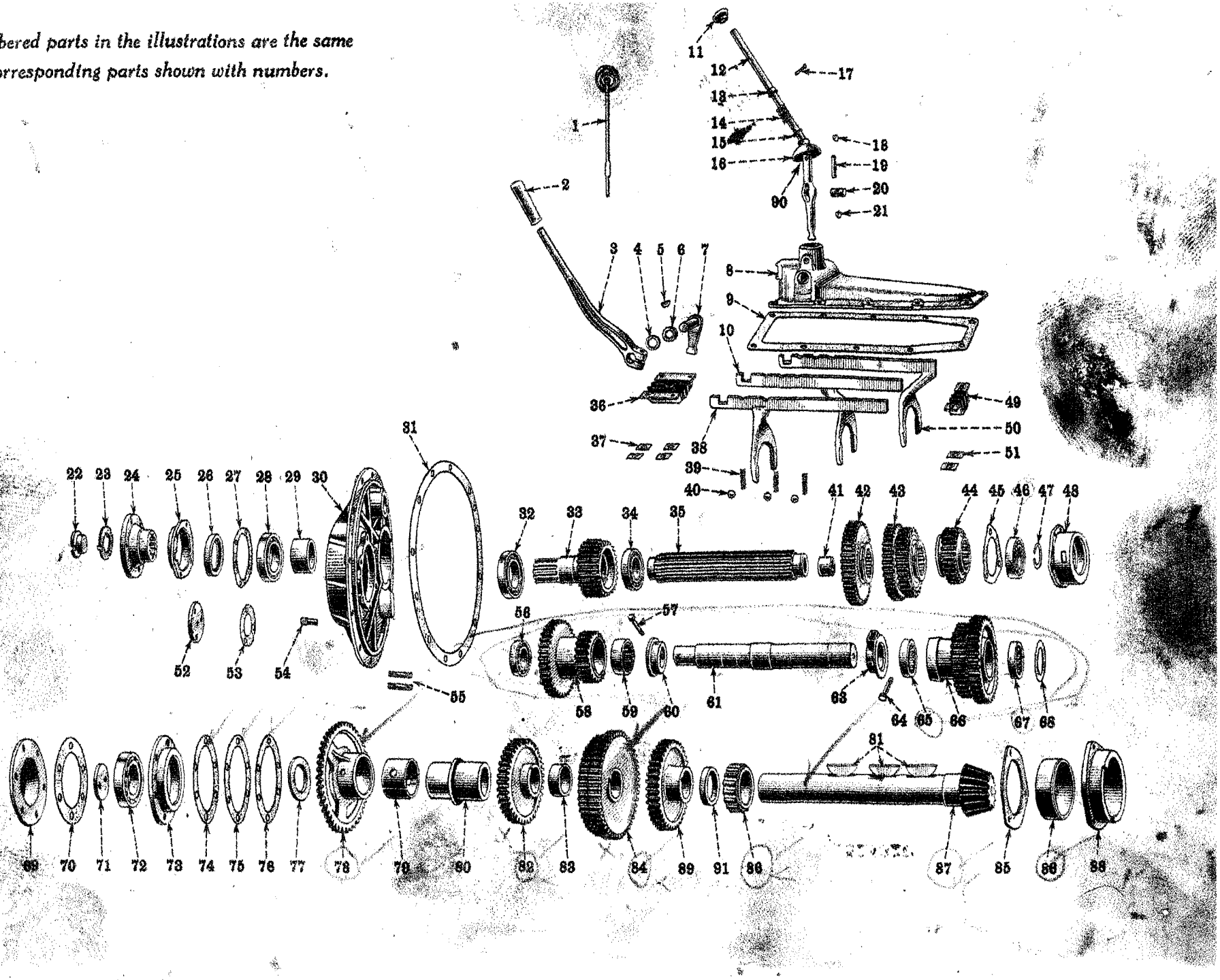

STEERING CLUTCH - Continued

I H C Part No.	Description
8680 D	Steering clutch release fork upper bearing retainer.
.....	Capscrew, 7/16" x 1-1/2" N.C.
.....	Lockwasher, 7/16".
8682 DX	Steering clutch release fork lower bearing retainer.
21969 D	Steering clutch release fork upper bearing oil seal.
29899 D	Steering clutch release fork lower bearing grease tube connecting nut.
35252 DX	Steering clutch release fork lower bearing.
40880 D	Steering clutch shaft coupling oil seal.
40890 D	Steering clurch shaft coupling (12 teeth).
48178 D	Steering clutch shaft coupling bolt lock.
50822 D	Steering clutch shaft coupling bolt.
56005 D	Steering clutch release collar shifter link.
56006 D	Steering clutch release collar key pin.
56007 D	Steering clutch release collar shifter link pin.
56008 D	Steering clutch release fork upper bearing felt.
56009 D	Steering clutch release fork upper bearing cage gasket.
56009 D	Steering clutch release fork upper bearing retainer gasket.
56010 D	Steering clutch release lever spacer.
56011 D	Steering clutch inspection cover.
56013 DX	Steering clutch release collar key, complete.
56014 D	Steering clutch inspection cover gasket.
56017 D	Steering clutch release fork upper bearing felt retainer.
56018 DX	Steering clutch release collar.
57009 D	Steering clutch release fork.
57101 DX	Steering clutch release fork lower bearing grease tube, complete.
.....	Square head bolt, 1/4" x 3/4" N.C.
.....	Hex. nut, 1/4" N.C.
.....	Lockwasher, 1/4".
57102 D	Steering clutch release fork lower bearing cap.
.....	Slotted flat head bolt, 5/16" x 1" N.C.
.....	Hex. nut, 5/16" N.C.
.....	Lockwasher, 5/16".
57103 DX	Steering clutch release bearing grease tube, complete.
M 89541	Steering clutch release fork lower bearing.
Q 3617	Steering clutch release fork lower bearing lubricator.
Q 3617	Steering clutch release bearing lubricator.
Q 3621	Steering clutch release fork upper bearing lubricator.
ST 205	Steering clutch release fork upper bearing.

Unnumbered parts in the illustrations are the same as corresponding parts shown with numbers.

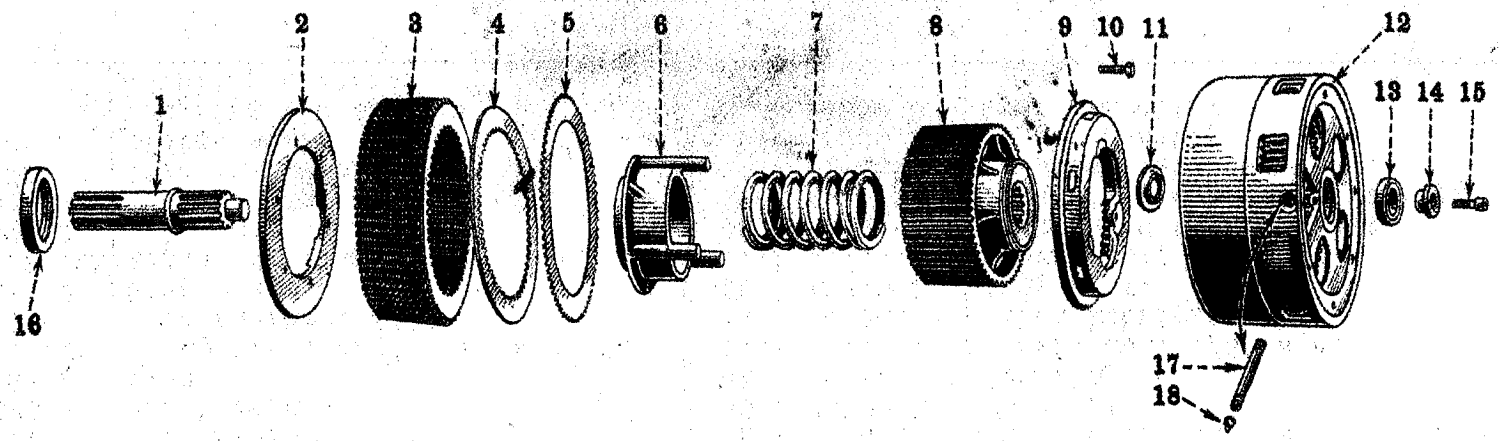

When ordering, always use I H C Part Nos.

Ref. No.	I H C Part No.	Description	Ref. No.	I H C Part No.	Description
...	40891 DA	Steering clutch, complete.	10	54968 D	Pressure plate dowel bolt.
			11	53742 DA	Spacer.
1	40877 DA	Shaft.	12	5714 DD	Drum.
2	5715 D	Plate.		5714 DDX	Drum, complete.
...	.....	Capscrew, 1/2" x 1-1/4" N.C.	...	.....	Capscrew, 5/8" x 1-1/4" N.F.
...	.....	Lockwasher, 1/2".	...	.....	Lockwasher, 5/8".
3	(See Note)		13	53389 D	Pilot bearing.
4	40883 DA	Friction disc.	14	50098 D	Pilot bearing retainer.
5	40882 D	Driving disc.	15	50099 D	Pilot bearing retainer bolt.
6	5712 DB	Retainer.	...	.....	Lockwasher, 1/2".
7	54238 D	Spring.	16	40881 DA	Bearing.
8	5713 DB	Hub (58 teeth).	17	40889 DA	Lubricator pipe.
9	5711 DA	Pressure plate (58 teeth).	18	Q 3618	Lubricator.

NOTE: This assembly is made up of a group of friction discs (Ref. No. 4) and driving discs (Ref. No. 5).

When ordering, always use I H C Part Nos.

Ref. No.	I H C Part No.	Description
...	40938 DA	Engine clutch (17" over-center) complete.
...	.....	Capscrew, 1/2" x 2-1/8".
...	.....	Lockwasher, 1/2".
1	10430 V	Key.
2	40948 D	Shaft.
3	42298 D	Pin bushing.
4	43202 D	Driven member assembly.
...	.....	Flat head rivet, 3/8" x 3/4".
5	43193 DX	Sleeve and bushing.
5,6,7, 8,9,12	43190 D	Sleeve and bearing assembly.
6	43201 D	Plate.
...	.....	Capscrew, 5/16" - 18 x 5/8".
...	.....	Lockwasher, 5/16".
7	48173 D	Release bearing.
8	43195 D	Ring.
9	43197 DX	Carrier.
10	5723 DA	Fork.
...	.....	Capscrew, 5/8" x 2" N.C.
...	.....	Lockwasher, 5/8".
11	42298 D	Pin bushing.
12	43198 D	Disc.
...	.....	Capscrew, 3/8" - 16 x 3/4".
...	.....	Lockwasher, 3/8".
13	43214 D	Ring plate.
14	43212 DAX	Adjusting ring.
15	40974 D	Bolt lock.
16	40943 D	Facing.
17	40942 DX	Disc with facing, cp.
18	40941 D	Clutch shaft.
19	40944 DA	Coupling (18 teeth).
20	40947 D	Coupling washer.

Ref. No.	I H C Part No.	Description
21	40946 D	Ring (18 teeth).
22	41693 D	Bolt lock.
23	11669 K	Bearing (pilot).
24	43215 D	Facing package.
25	43247 D	Rivet (24 used).
26	43213 D	Plate.
	43213 DX	Plate assembly.
27	54953 D	Cam block screw lock.
28	.....	Screw, 1/4"-20 x 1/2".
29	43248 D	Cam block.
31	43208 DAX	Back plate.
32	54949 D	Bolt, 5/16"-18 x 2-1/2".
33	43217 D	Spring.
34	.....	Washer (standard).
35	54951 D	Link pin, long.
...	.....	Washer, 3/8" I.D. x 7/8" O.D.
36	43207 D	Link.
37	54952 D	Link pin, short.
...	.....	Washer, 3/8" I.D. x 7/8" O.D.
38	43210 DX	Camshaft.
39	Q 3625	Lubricator fitting.
40	43199 D	Dowel pin.
43	40945 D	Coupling bolt.
...	.....	Hex. nut, 1/2" N.F.
44	Q 3615	Pilot lubricator.
45	40945 D	Ring bolt.
...	.....	Hex. nut, 1/2" N.F.
46	21444 H	Brake disc facing rivet.
48	Q 3627	Camshaft lubricator fitting.
49	Q 3615	Coupling lubricator
...	43206 DA	Cover assembly.
...	54950 D	Link pin clip.

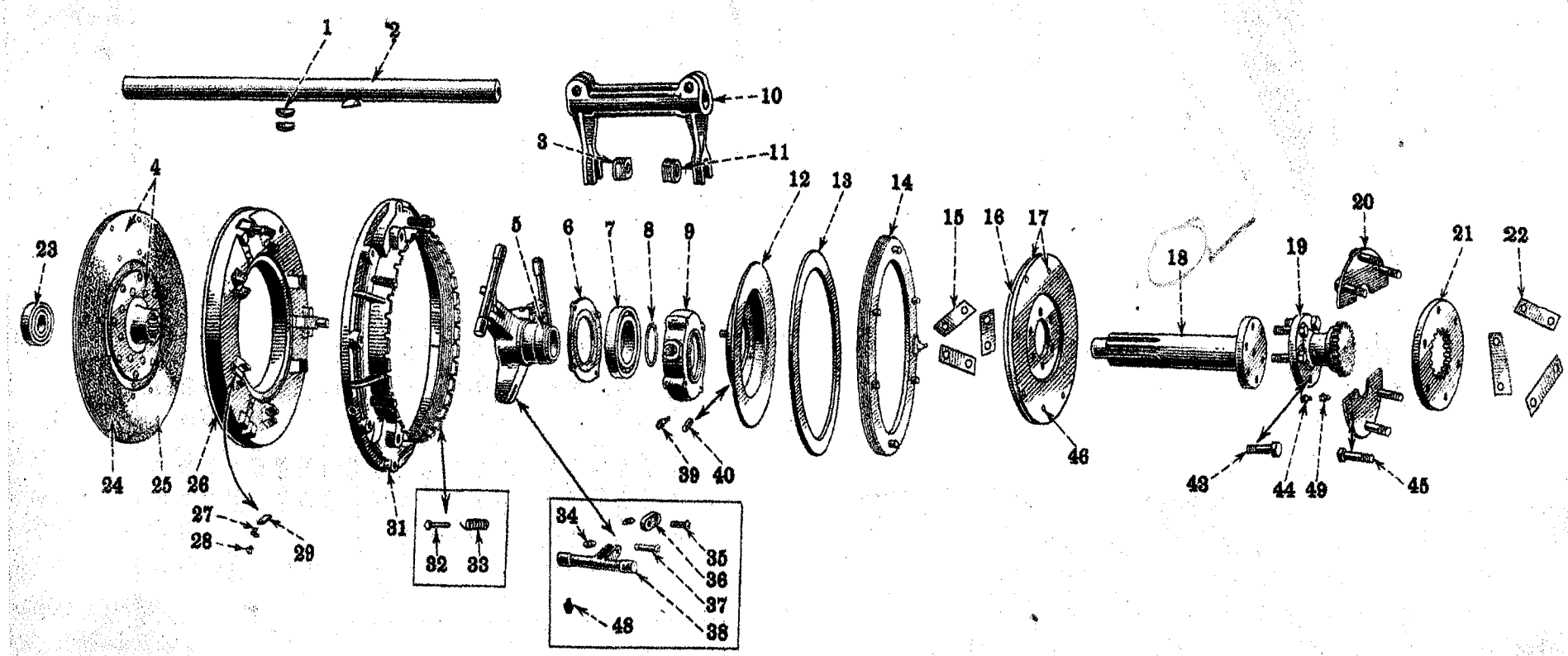

Unnumbered parts in the illustrations are the same as corresponding parts shown with numbers.

HOOD AND SIDE SHEETS

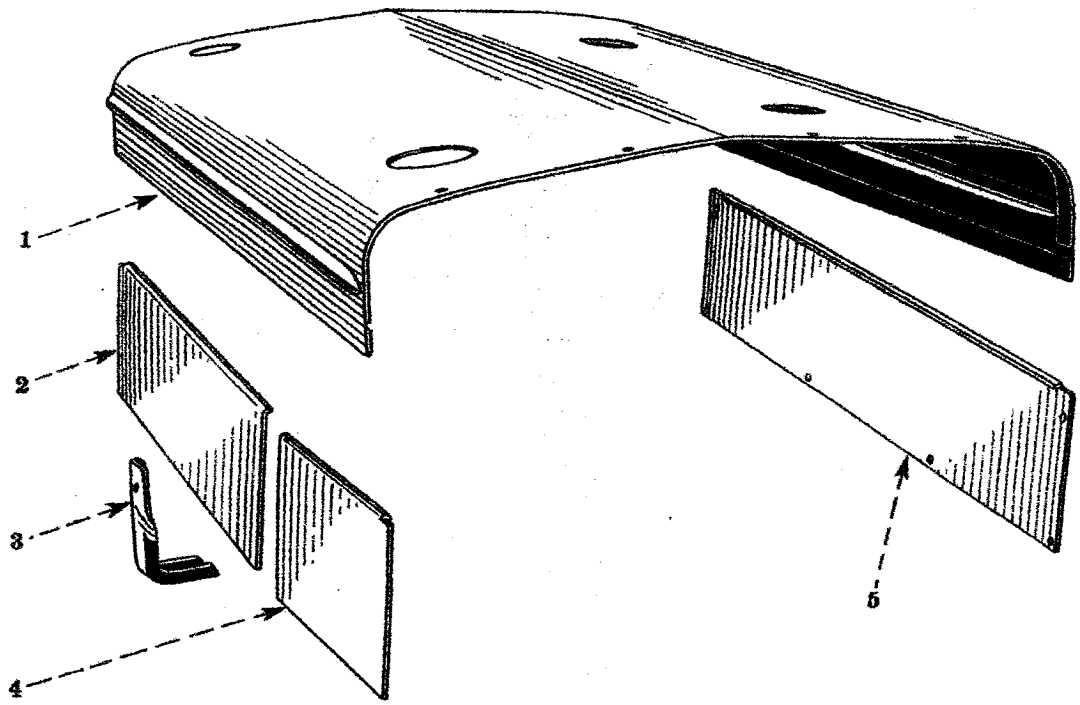

When ordering, always use I H C Part Nos.

Ref. No.	I H C Part No.	Description
1	42598 DAX	Hood sheet.
...	.....	Capscrew, 3/8" x 1" N.C.
...	.....	Slotted flat head bolt, 3/8" x 1" N.C.
...	.....	Hex. nut, 3/8" N.C.
...	.....	Lockwasher, 3/8".
...	.....	Washer, 13/32" I.D. x 7/8" O.D.
2	48375 D	Side sheet, L.H.
...	.....	Capscrew, 3/8" x 3/4" N.C.
...	.....	Capscrew, 3/8" x 3/4" N.F.
...	.....	Hex. nut, 3/8" N.F.
...	.....	Lockwasher, 3/8".
3	42595 D	Sheet support, L.H.
...	.....	Capscrew, 3/8" x 3/4" N.C.
...	.....	Lockwasher, 3/8".
4	48376 DX	Inspection cover.
...	.....	Capscrew, 3/8" x 3/4" N.C.
...	.....	Lockwasher, 3/8".
5	42594 D	Side sheet, R.H.
...	.....	Capscrew, 3/8" x 3/4" N.C.
...	.....	Capscrew, 3/8" x 3/4" N.F.
...	.....	Lockwasher, 3/8".

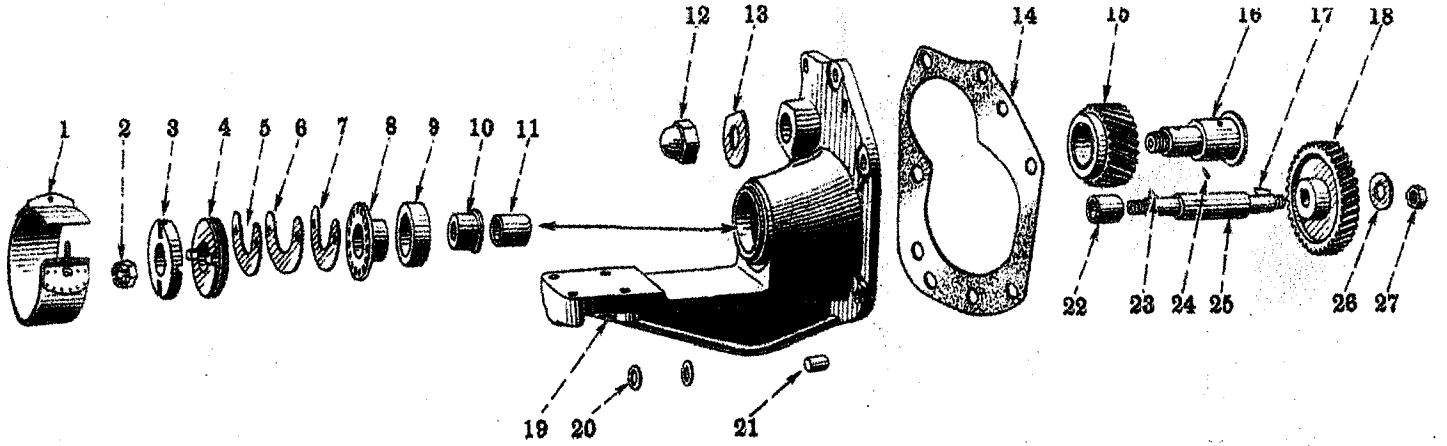

Unnumbered parts in the illustrations are the same as corresponding parts shown with numbers.

Ref. No.	I H C Part No.	Description
1	28388 DA	Cover, complete.
...	.....	Slotted fillister head screw, No. 10 - 24 x 7/8".
2	.....	Nut, 1/2" N.F.
3	35719 D	Spacer.
4	12740 D	Block (male).
5	10481 D	Shim (medium).
6	10482 D	Shim (heavy).
7	10553 D	Shim (light).
8	22716 DA	Coupling.
...	.....	Capscrew, 1/4" N.F. x 7/16".
...	.....	Lockwasher, 1/4".
9	33788 D	Oil seal.
10	32503 D	Spacer.
11	32506 D	Bushing.
12	35319 D	Nut.
13	25132 D	Washer.
14	32505 D	Gasket.
15	32497 DX	Gear, complete (27 teeth).
16	32499 DAX	Shaft, complete.
...	.....	Pipe plug, 1/8".
17	13085 D	Key.
18	32500 DA	Gear (36 teeth).
19	5947 DX	Bracket, complete.
...	.....	Pipe plug, 1/8".
...	.....	Capscrew, 1/2" N.F. x 2".
...	.....	Capscrew, 1/2" N.F. x 2-1/4".
...	.....	Capscrew, 1/2" N.F. x 1-1/8".
...	.....	Lockwasher, 1/2".
...	.....	Hex. nut, 1/2" N.F.
20	25352 D	Gasket.
21	32504 D	Dowel.
22	32506 D	Bushing.
23	4167 T	Key.
24	29764 D	Pin.
25	32501 D	Shaft.
...	.....	Slotted hex. nut, 1/2" N.F.
...	.....	Hex. nut, 1/2" N.F.
...	.....	Cotter, 3/32" x 1".
26	32502 D	Washer.
27	.....	Nut, 1/2" N.F.

When ordering, always use I H C Part Nos.

MAGNETO (F-6) - Continued

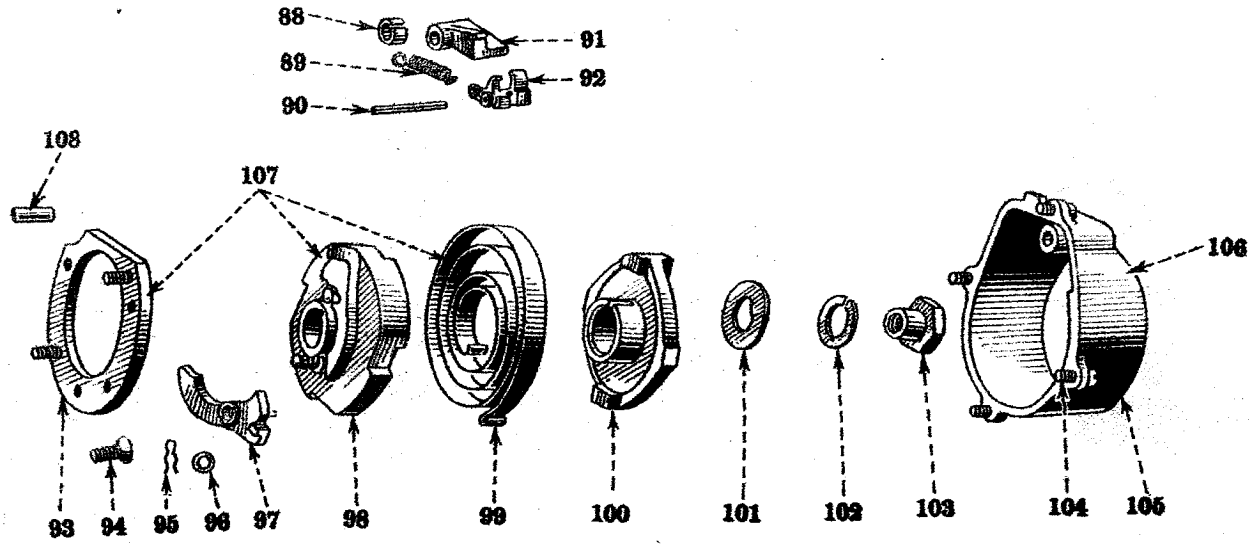

Unnumbered parts in the illustrations are the same as corresponding parts shown with numbers.

Ref. No.	I H C Part No.	Description
88	24616 DA	Pawl spacer.
89	24612 D	Spring.
90	24613 D	Pin.
91	32671 D	Pawl.
92	24611 D	Latch.
93	33150 D	Frame ring.
94	.....	Screw (No. 10 - 32 x 9/16").
95	30114 D	Snap ring.
96	24610 D	Washer.
97	32711 D	Engaging pawl.
98	{32603 DAX	Magneto member with pins.
	{32712 D	Magneto member, complete with pawls.
99	24605 D	Spring.
100	24602 DA	Cam member.
101	24603 D	Washer.
102	.....	Lockwasher (1/2").
103	24604 D	Nut.
...	.....	Special light lockwasher (1/2").
104	.....	Screw (No. 8 - 32 x 5/8").
105	5086 DX	Coupling cover, complete.
...	.....	Fillister head screw (No. 8 - 32 x 5/8").
...	.....	Lockwasher (No. 8).
106	27311 D	Oiler.
107	36246 D	Impulse coupling rotating member, complete.
108	24609 D	Pin.
...	21314 D	Coil core, complete.

When ordering, always use I H C Part Nos.

MAGNETO (F-6) - Continued

(See Illustration on page 81)

Ref. No.	I H C Part No.	Description
28	21347 DC	Seal lower.
29	28656 DZA	Block with seals and disc.
	28656 DYA	Block with seals.
30	28674 D	Distributor contact spring.
31	21348 DB	Seal, upper.
32	28657 DX	Disc, complete.
33	.....	Screw (No. 5 - 40 x 5/16").
34	21463 DAXA	Brush, complete.
...	.....	Fillister head screw (No. 5 - 40 x 3/16").
...	.....	Lockwasher (No. 6 - 1/32" x 1/32").
35	21460 DY	Distributor, complete.
36	2551 DAY6	Distributor bearing.
37	21409 DB	Condenser.
...	.....	Nut (No. 10 - 32 N.F.).
...	.....	Lockwasher (No. 10 - 1/16 x 3/64").
38	21422 D	Clamp.
...	.....	Lockwasher (No. 8 - 3/64 x 3/64").
...	.....	Fillister head slotted screw (No. 8 - 32 x 5/16").
39	21366 D	Spring.
40	21324 D	Screw.
41	21323 D	Strap.
42	21322 D	Magnet.
43	21328 DX	Oiler.
	E4A-576	Oiler felt (not seen).
44	21318 D	Screw, long.
45	E4-295	Oiler.
46	2547 DX	Cover, complete.
47	21349 D	Spring.
48	21401 DX	Coil, complete.
49	39556 D	Cover.
50	38609 DA	Plain washer.
51	48564 D	Secondary lead-out, complete.
...	.....	Fillister head slotted screw (No. 8 - 32 x 5/8").
...	.....	Lockwasher (No. 8 - 3/64 x 3/64").

Ref. No.	I H C Part No.	Description
52	38041 D	Felt.
53	21361 D	Washer.
54	21362 D	Snap ring.
55	21440 D	Lead-out tube.
56	21319 D	Gasket.
57	28655 D	Screw.
58	21464 DX	Contact spring.
59	21469 D	Shaft, gear and distributor, complete.
60	21360 DX6	Shaft, and gear, complete.
61	21353 D	Shim.
62	21466 D	Shim.
63	E4A-358	Screw.
...	.....	Lockwasher (No. 10 - 1/16 x 3/64").
64	E4A-353	Retainer with balls.
65	E4A-324	Oil flinger.
66	E4A-305	Shim, light.
67	E4-212	Shim, medium.
68	E4A-372	Shim, heavy.
69	21340 D	Spacer.
70	33138 D	Pinion (40 teeth).
71	21343 D	Nut.
72	21468 D	Cam.
73	21342 D	Cam key.
74	4167 T	Key (Woodruff No. 3).
75	21333 DX6	Rotor, complete.
76	4167 T	Key (Woodruff No. 3).
77	E4A-351	Inner bearing race.
78	E4A-353	Retainer with balls.
79	E4A-352	Outer bearing race.
80	30379 D	Felt retainer.
81	E4-226	Felt.
82	30378 D	Felt retainer.
83	21399 DX	Primary lead-out.
84	21331 D	Shield.
85	21397 D	Screw.
...	.....	Special heavy lockwasher (No. 8 - 3/32 x 3/64").
86	E4A-358	Screw.
...	.....	Lockwasher (No. 10 - 1/16 x 3/64").
87	2546DBYb	Frame, complete.
...	.....	Flat head slotted screw (No. 8 - 32 x 11/16").

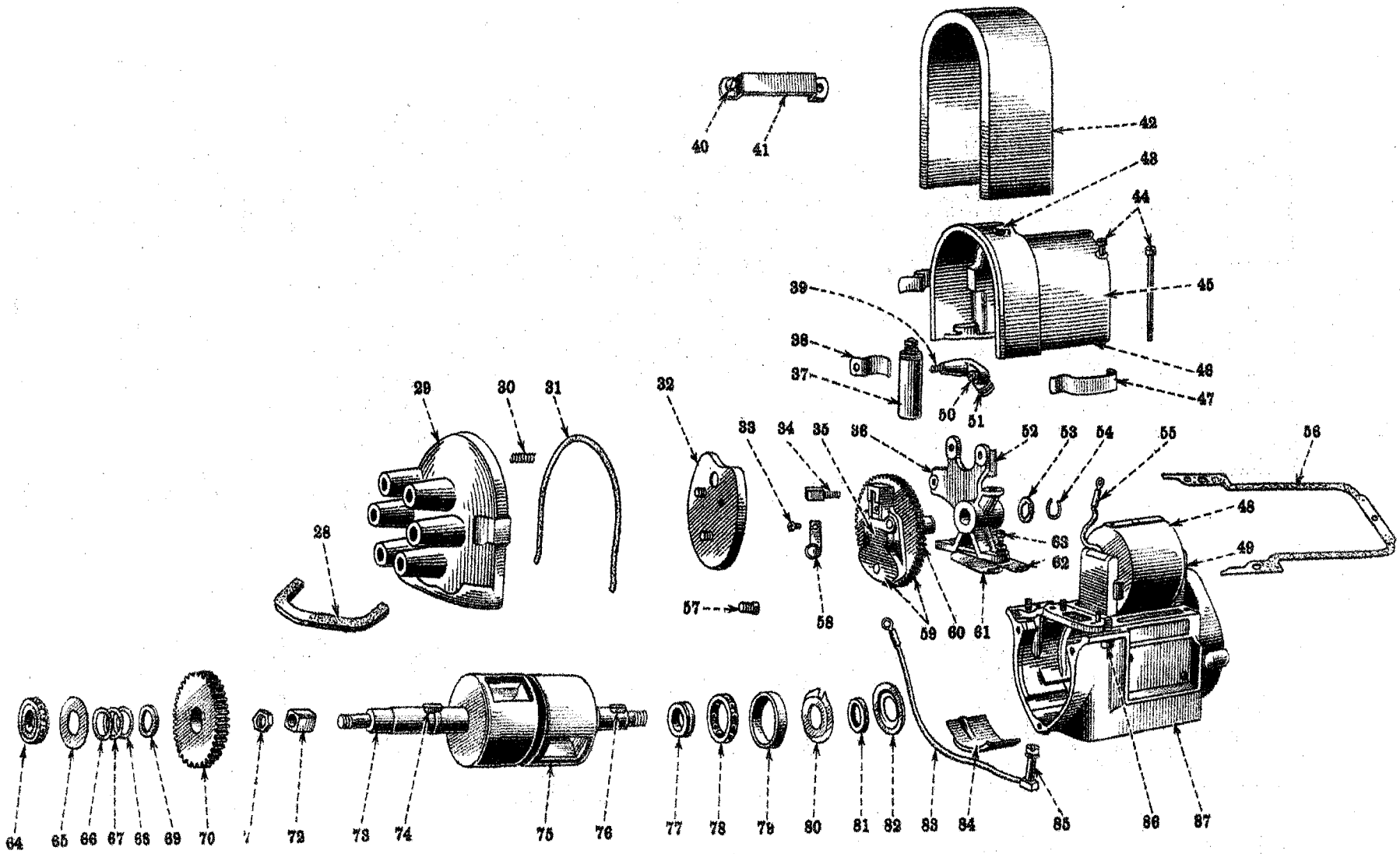

Unnumbered parts in the illustrations are the same as corresponding parts shown with numbers.

(For list of parts, see page 82)

MAGNETO (F-6)

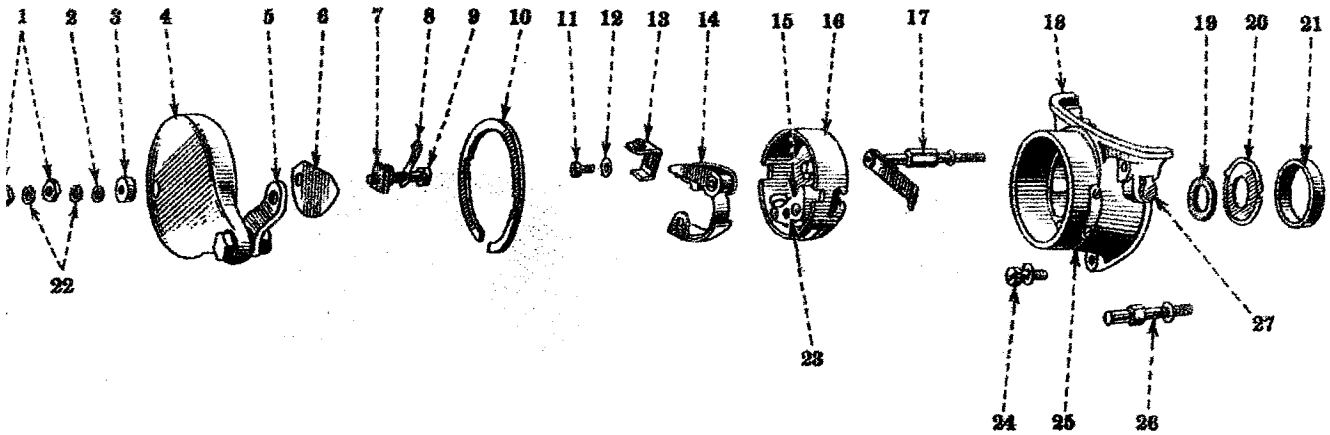

Unnumbered parts in the illustrations are the same as corresponding parts shown with numbers.

Ref. No.	I H C Part No.	Description
..	32361 D	Magneto, complete (F-6).
..	.....	Capscrew (3/8" N.C. x 1-5/8").
..	.....	Lockwasher (3/8").
1	E4-267A	Nut.
2	E4-271	Plain washer.
3	30037 D	Bushing.
4	3930 DX	Cover, complete.
5	32673 D	Link.
6	31135 D	Spring insulator.
7	30036 D	Terminal insulator.
8	30035 D	Spring.
9	30038 D	Screw.
..	.....	Lockwasher (No. 10 - 1/16 x 3/64").
10	21327 D	Packing.
11	21393 D	Screw.
12	21394 D	Washer.
13	21388 DBX	Stationary point, complete.
14	21373 DAYA	Breaker arm assembly.
15	21383 D	Cam felt.
16	21368 DBY6	Breaker cup.
17	21329 DX	Spring post, complete.
18	2548 DAY	Breaker housing.
19	E4-226	Felt
20	21330 D	Retainer.
21	E4A-352	Outer bearing race.
22	.....	Lockwasher (No. 10 - 1/16 x 3/64").
23	21384 DXA	Spring anchor, complete.
24	21441 D	Screw.
..	.....	Lockwasher (No. 10 - 1/16 x 3/64").
25	21443 DX	Breaker stop.
	21444 D	Breaker stop gasket (not seen).
..	.....	Slotted round head screw (No. 5 - 40 x 3/16").
26	28856 D	Link post.
..	.....	Lockwasher (No. 10 - 1/16 x 3/64").
27	E4-295	Oiler.
	E4-216	Oiler felt (not seen).

When ordering, always use I H C Part Nos.

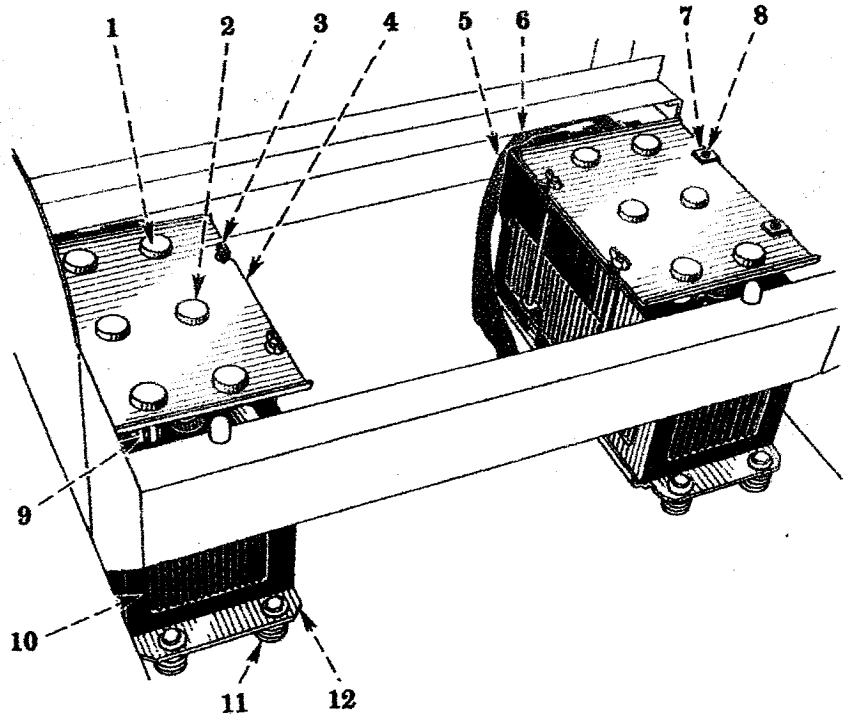

Unnumbered parts in the illustrations are the same as corresponding parts shown with numbers

Ref. No.	I H C Part No.	Description
1	50234 D	Battery hold-down rubber, short.
2	50235 D	Battery hold-down rubber, long.
3	Q 3505	Wing nut.
4	41832 DAX	Cover, complete.
5	52435 D	Bolt.
6	42833 D	Ground cable, complete.
7	41831 D	Washer.
8	41830 D	Stud.
9	41908 D	Starting switch cable, complete.
10	{30466 D	Battery (Prest-O-Lite No. 617 JKB) (optional).
	{55468 D	Battery (Willard No. 5245 Type DRG-17-3) (optional).
11	37976 D	Battery bottom rest spring.
12	41826 DXA	Battery bottom support, complete.
...	.....	Capscrew, 1/2" x 2-1/4" N.C.
...	.....	Washer, 17/32" I.D. x 1-1/4" O.D.
...	42397 D	Battery cable chield.
...	.....	Capscrew, 3/8" x 5/8" N.F.
...	.....	Hex. nut, 3/8" N.F.
...	.....	Lockwasher, 3/8".

When ordering, always use I H C Part Nos.

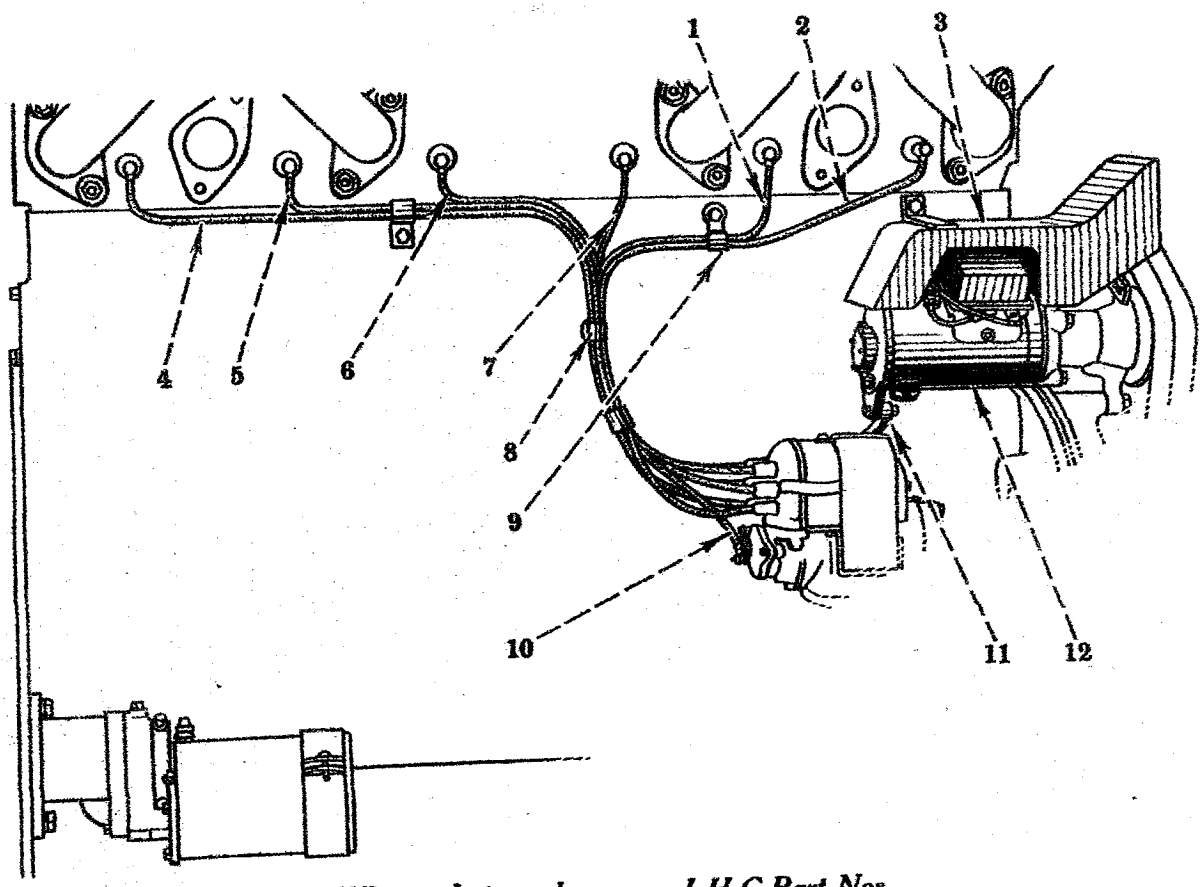

When ordering, always use I H C Part Nos.

Ref. No.	I H C Part No.	Description
1	42220 D	Cable No. 2.
2	39753 D	Cable No. 1.
3	43006 D	Generator heat shield.
...	.....	Capscrew, 3/8" N.C. x 3/4".
...	.....	Lockwasher, 3/8".
4	39754 D	Cable No. 6.
5	39753 D	Cable No. 5.
6	37319 D	Cable No. 4.
7	28592 D	Cable No. 3.
8	39749 D	Clip.
...	.....	Capscrew, 3/8" N.C. x 5/8".
...	.....	Capscrew, 1/4" N.C. x 5/8".
...	.....	Lockwasher, 3/8".
...	.....	Lockwasher, 1/4".
...	.....	Hex. nut, 1/4" N.C.
9	27387 D	Clip - front.
...	.....	Capscrew, 3/8" N.C. x 3/4".
...	.....	Lockwasher, 3/8".
10	42651 DX	Short circuiting cable.
11	5992 D	Generator bracket.
...	.....	Capscrew, 7/16" N.C. x 1-1/4".
...	.....	Lockwasher, 7/16".
12	50585 D	Generator (Delco-Remy).
...	.....	Capscrew, 3/8" N.C. x 1-3/4".
...	.....	Capscrew, 5/16" N.F. x 1-3/8".
...	.....	Hex. nut, 5/16" N.F.
...	.....	Lockwasher, 3/8".
...	.....	Lockwasher, 5/16".
...	27618 D	Cable reinforcement.
...	37291 D	Terminal (push type).
...	42650 D	Cable assembly.
...	1924 T	Terminal (ring type).

NOTE: All service and replacement parts for Generator should be referred to an Authorized United Motors Service Branch or Service Station.

Ref. No.	I H C Part No.	Description
1	42833 D	Ground cable.
2	55468 D	Battery - Willard No. 5245 Type DRG-17-3 (optional).
	30466 D	Battery - Prest-O-Lite No. 617 JKB. (optional).
3	38100 D	Cable clip - battery to battery.
...	.....	Capscrew, 3/8" x 3/4" N.F.
...	.....	Hex. nut, 3/8" N.F.
...	.....	Lockwasher, 3/8".
4	41906 D	Cable, complete - battery to battery.
5	38100 D	Cable clip - battery to battery.
6	30466 D	Battery - Prest-O-Lite No. 617 JKB (optional).
	55468 D	Battery - Willard No. 5245 Type DRG-17.3 (optional).
7	42383 D	Ammeter.
8	42922 DX	Lighting switch.
9	27385 D	Cable clip - ammeter to starting switch (for 3/8" bolt).
...	.....	Capscrew, 3/8" x 3/4" N.F.
...	.....	Hex. nut, 3/8" N.F.
...	.....	Lockwasher, 3/8".
10	48694 D	Cable harness.
11	27385 D	Cable clip - ammeter to starting switch (for 3/8" bolt).
12	30665 D	Cable clip - generator to ammeter.
13	50585 D	Generator (Delco-Remy).
...	.....	Capscrew, 3/8" N.C. x 1-3/4".
...	.....	Capscrew, 5/16" N.F. x 1-3/8".
...	.....	Hex. nut, 5/16" N.F.
...	.....	Lockwasher, 3/8".
...	.....	Lockwasher, 5/16".
14	41908 D	Cable - battery to starting switch.
15	50203 H	Battery cable grommet (in dash).
16	64931 H	Starting switch.
17	41909 D	Cable, complete - starting switch to starting motor.
18	41916 D	Cable clip - starting switch to starting motor.
19	27385 D	Cable clip - generator to ammeter (for 3/8" bolt).
...	.....	Capscrew, 3/8" x 1" N.F.
...	.....	Hex. nut, 3/8" N.F.
...	.....	Lockwasher, 3/8".
20	42999 D	Starting motor (Delco-Remy Model No. 756).
...	.....	Capscrew, 1/2" N.F. x 1-1/8".
...	.....	Lockwasher, 1/2".
21	27386 D	Cable clip - generator to ammeter (for 1/2" bolt).
22	27385 D	Cable clip - generator to ammeter (for 3/8" bolt).
...	41827 D	Battery bottom mounting spacer.
...	42998 D	Relay with internal field resistance unit (Delco-Remy No. 1116777).
...	26453 HX	Battery terminal bolt with nut, complete.
...	10815 V	Fuse.

SPECIAL EQUIPMENT FOR TRACTRACTORS NOT EQUIPPED WITH ELECTRIC STARTER EQUIPMENT

I H C Part No.	Description
47801 D	Starting motor mounting opening cover.
47802 D	Choke control rod, front.
47824 D	Idler drive bracket cover.
.....	Capscrew, 3/8" N.F. x 1-3/4".
.....	Hex. nut, 3/8" N.F.
.....	Lockwasher, 3/8".

NOTE: All service and replacement parts for Starting Motor and Generator should be referred to an Authorized United Motors Service Branch or Service Station.

WIRING FOR STARTING SWITCH, BATTERIES AND GENERATOR

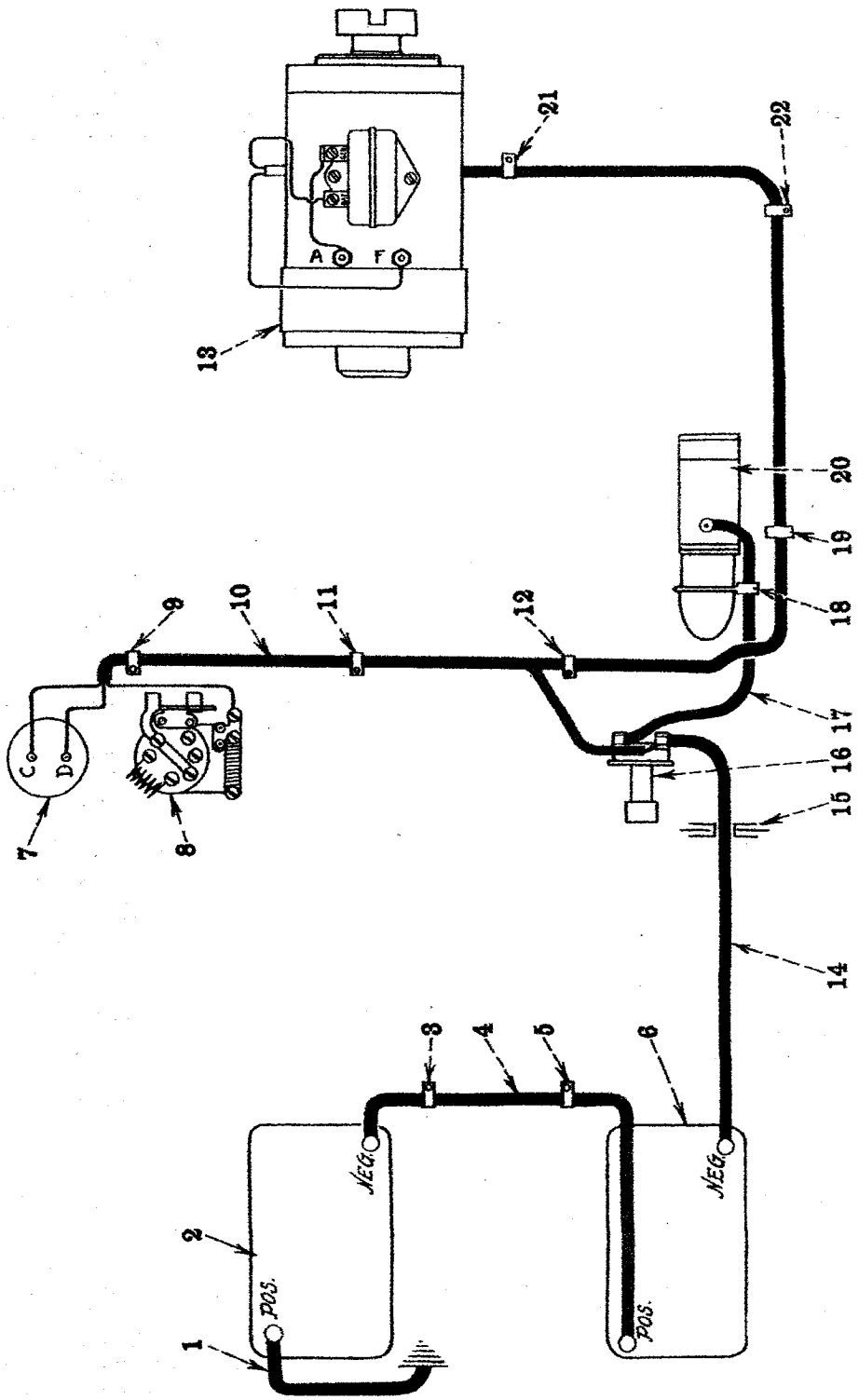

When ordering, always use I H C Part Nos.

Ref. No.	I H C Part No.	Description
1	41960 DX	Yoke.
..	.....	Washer, 15/32" I.D. x 13/16" O.D.).
..	.....	Cotter, 3/32" x 3/4".
2	.....	Nut, 3/8" N.F.
3	41964 D	Compression release rod spring.
4	41995 D	Compression release rod.
..	.....	Hex. nut, 3/8" N.F.
..	.....	Cotter, 1/8"x3/4".
5	41959 D	Clip.
6	41950 DX	Compression release lever and shaft, cp.
7	5890 D	Compression release arm.
..	.....	Capscrew, 3/8" x 1" N.C.
..	.....	Lockwasher, 3/8".
8	7699 TM	Compression release arm key.
9	5886 DX	Control housing, complete with pin.
...	.....	Capscrew, 3/8" x 1" N.C.).
..	.....	Lockwasher, 3/8".
10	.....	Washer.
11	41962 D	Governor control rod balance spring.
12	5890 D	Governor control arm.
13	41973 D	Pin (short).
14	41961 D	Center plate.
15	41965 D	Spring retainer.
16	48912 D	Spring support.
...	.....	Square neck carriage bolt, 3/8" x 3/4" N.C.).
...	.....	Hex. nut, 3/8" N.C.
...	.....	Lockwasher, 3/8".
17	S 363-1/2	Governor control lever lock pivot pin.
...	.....	Cotter, 1/8" x 3/4".
18	41991 D	Idle stop plunger spring.
19	41990 D	Idle stop plunger.
20	48913 D	Control lever lock.
21	E 1324	Control lever lock pin.
...	.....	Cotter, 1/8"x3/4".
22	41955 D	Instrument panel.
...	.....	Capscrew, 1/4" x 1/2" N.C.
23	41963 D	Governor control rod.
...	.....	Hex. nut, 3/8" N.F.
...	.....	Washer, 13/32" I.D. x 3/4" O.D.
...	.....	Cotter, 1/8" x 3/4".
24	7699 TM	Governor control arm key.
25	10981 F	Pressure plate pin.
26	5887 DX	Pressure plate.
27	41968 D	Friction disc.
28	41966 D	Governor control brake pin (long).
29	48911 D	Governor control compression spring.
30	48914 D	Governor control lever and shaft, cp.
31	41597 D	Engine speed control lever handle.
32	41966 D	Governor control brake pin.
33	.....	Heat indicator (special) (not shown).
34	43040 D	Field resistance.
35	41934 D	Lubricating oil indicator.
36	.....	Dash light (special).
37	42383 D	Ammeter.
38	42922 D	Switch, complete.
39	41953 D	Choke button.
...	.....	Cotter, 1/16" x 3/8".
40	41953 D	Primer button.
41	5855 DX	Steering clutch lever.
42	5832 DX	Engine clutch lever.
...	.....	Capscrew, 5/8" x 2-1/2" N.F.
...	.....	Hex. nut, 5/8" N.F.
...	.....	Lockwasher, 5/8".
43	5815 D	Brake pedal pad.
44	5818 D	Brake lock.
45	5938 DAX	High-low gear shift lever.
...	.....	Capscrew, 1/2" x 1-5/8" N.C.
...	.....	Lockwasher, 1/2".
46	42560 D	Dash and cowl assembly.
47	43039 D	Dimmer resistance.
48	5855 DX	Steering clutch lever.
49	64931 H	Starter button.
50	5815 D	Brake pedal pad.
51	5818 D	Brake lock.
52	42553 DXA	Engine clutch cover.
...	.....	Capscrew, 3/8" x 1" N.C.
...	.....	Lockwasher, 3/8".
53	42512 DAX	Gear shift lever.
54	42547 D	Engine clutch inspection cover.
...	.....	Capscrew, 3/8" x 5/8" N.F.
...	.....	Lockwasher, 3/8".
55	43038 D	Handle screw.
56	.....	Lockwasher, No. 8 x 3/64 x 3/64".
57	38767 D	Lockwasher.
58	43036 D	Mounting nut.
59	43037 D	Handle.
60	42922 DY	Switch.
61	41597 D	Lever handle.

CONTROLS AND DASH

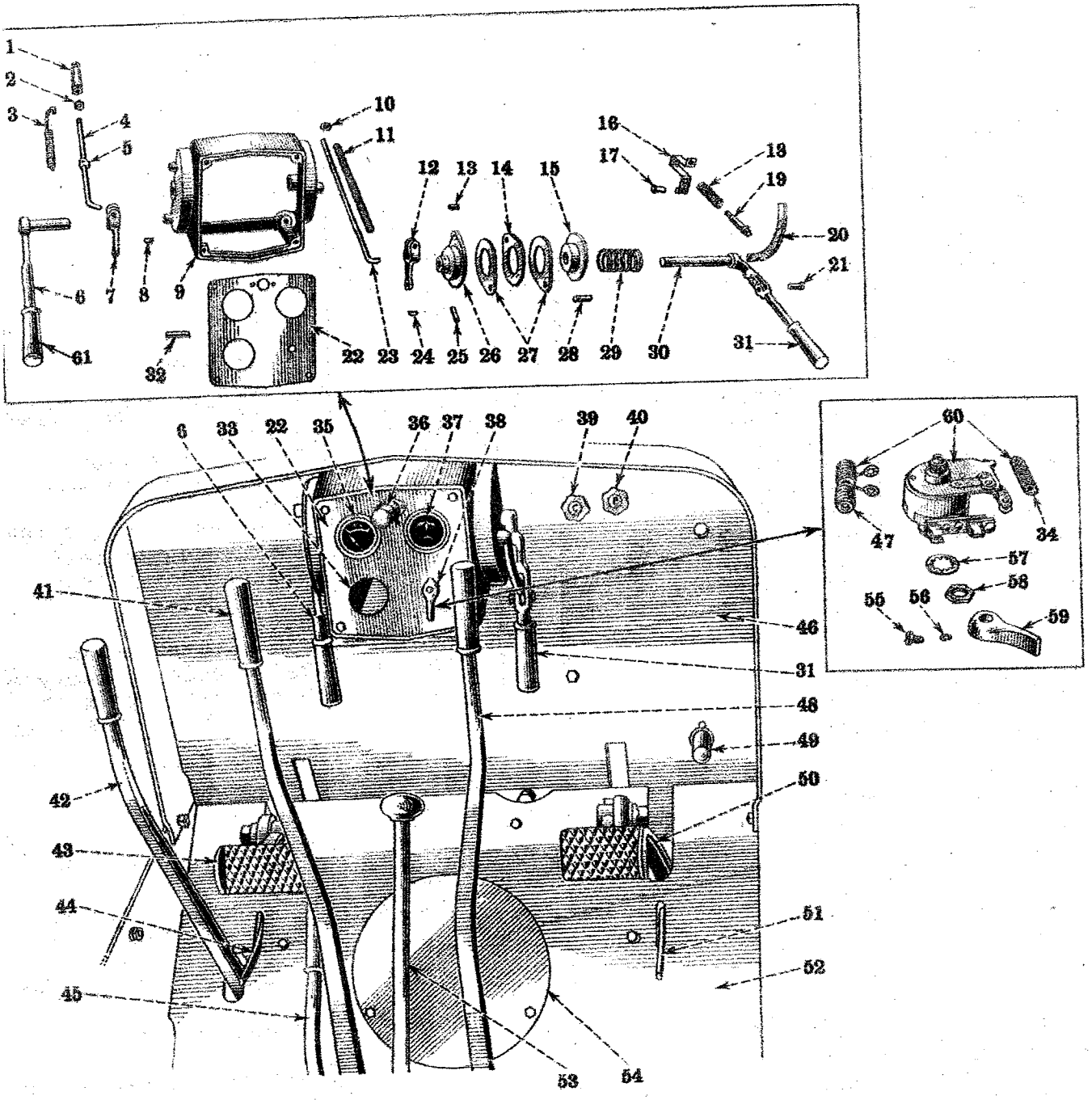

Unnumbered parts in the illustrations are the same as corresponding parts shown with numbers.

CARBURETOR - Continued

When ordering, always use I H C Part Nos.

Ref. No.	I H C Part No.	Description
...	42870 D	Carburetor, complete (Model C-12)(1-1/4").
...	.....	Capscrew, 3/8" N.C. x 1".
...	.....	Lockwasher, 3/8".
...	.....	Washer, 13/32" I.D. x 3/4" O.D.
1	42775 D	Bell crank support
2	42774 D	Bell crank
3	42772 D	Rod end
4	42771 D	Primer assembly
5	14611 H	Pin
...	.....	Cotter, 1/16"x7/16"
6	42773 D	Rod
...	.....	Cotter, 1/16"x7/16"
7	32897 D	Tube packing
8	32896 D	Tube gland
9	32895 D	Inlet tube
10	20684 D	Connector sleeve
11	20683 D	Connector nut
12	32948 D	Inlet valve
13	42869 D	Connecting rod
...	.....	Cotter, 1/16"x1/2"
14	42863 D	Shaft and lever assembly
15	27452 D	Packing spring
16	32590 D	Retainer
17	14581 D	Packing
18	32592 D	Washer
19	42867 D	Bell crank
20	42868 D	Screw
21	31636 D	Butterfly screw
22	32589 DX	Shutter assembly
23	14971 D	Butterfly screw
24	32602 DAX	Throttle shaft assembly
25	32607 DA	Gasket
...	.....	Cadmium plated fillister head screw, No. 8 - 32 x 3/8"
26	32608 D	Cover
27	32610 D	Screw gasket
28	32609 D	Clamp screw
29	32600 D	Stop screw
30	32599 D	Stop pin
31	32601 D	Butterfly
32	27435 D	Spring
33	32582 D	Cam
34	42871 D	Shaft and lever assembly
35	.....	Type "B" hex. nut, #8-32
36	.....	Lockwasher for #8 screw
37	18377 D	Gasket
38	32585 DA	Shaft bearing
39	32588 D	Dust washer
40	32587 D	Retainer
41	32586 D	Spring
42	42769 D	Gasket
43	5049DAX-32	Body, complete
44	32614 DX	Tube
45	32597 D	Gasket
46	.....	Lockwasher for No. 12 screw
47	.....	Screw-#12 - 24 x 3/4"
48	39826 D	Screen
49	27445 DA 27445 DAX	Drip hole filler Filler with screen
50	27444 D	Plug
51	.....	Screw-#4 - 36 x 7/16"
52	32578 D	Spring, upper leaf
53	32577 D	Spring, lower leaf
54	32575 D	Float lever
55	24672 D	Pivot
56	32576 DX	Float pivot screw
57	32581 DX	Valve cage assembly
58	.....	Screw-#12 - 24 x 1"
59	.....	Lockwasher for No. 12 screw
60	5975'DX	Bottom plate
61	32615 D	Gasket
62	32616 D	Metering well
63	32606 D	Gasket
64	32572 DAX	Float with ferrule
65	32574 D	Plate
66	5051 DX 35691 DX	Fuel bowl, complete Bowl, complete with adapter
67	.....	Steel pipe plug, 1/8"
68	18377 D	Gasket
69	29902 DX	Screen retainer
70	27436 D	Spring end
71	18377 D	Strainer screen gasket Plug gasket
72	42844 D	Plug
73	25948 D	Needle valve cage gasket Float lever pivot screw gasket
...	53079 D	Float and lever assembly

CARBURETOR

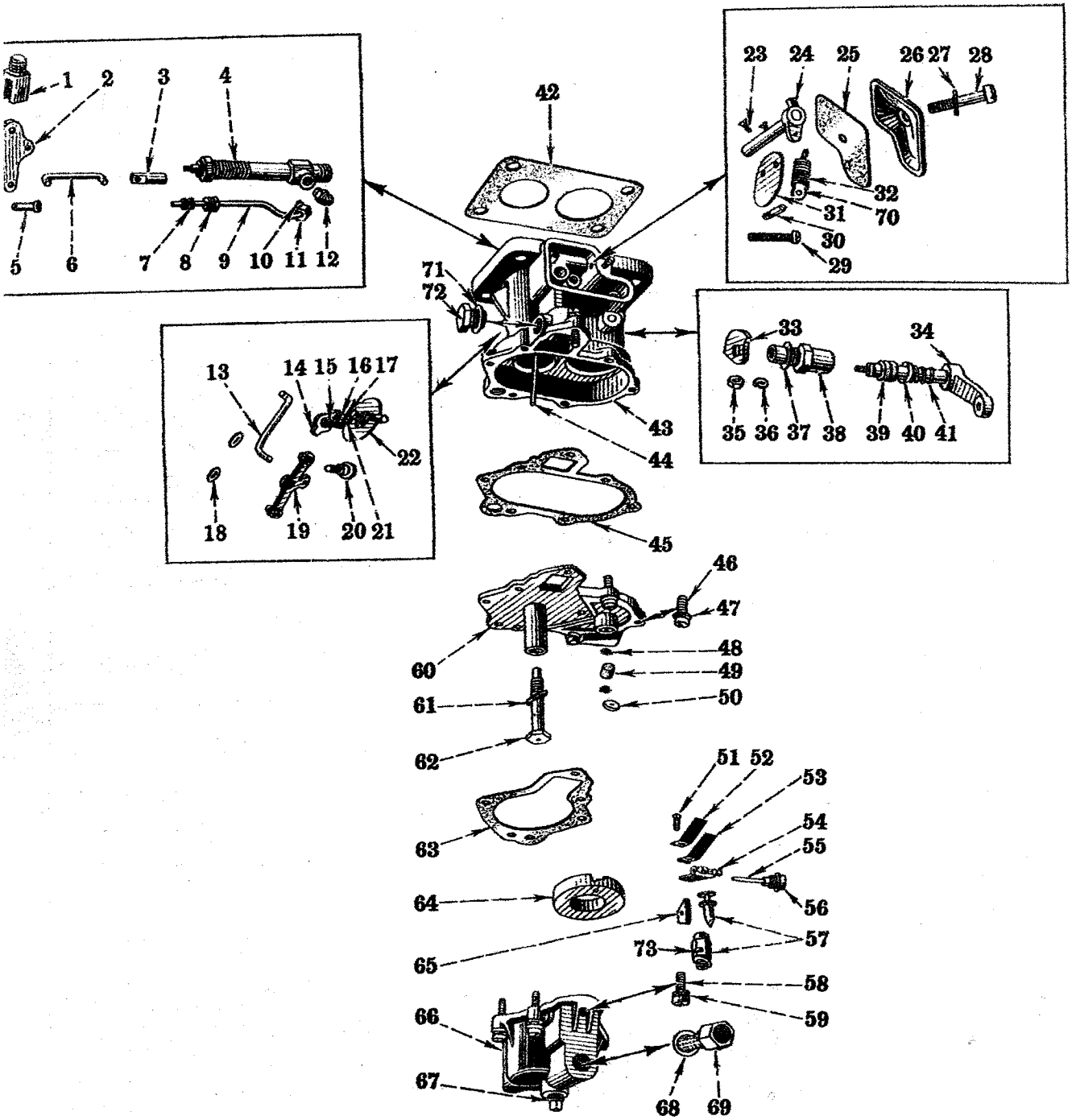

Unnumbered parts in the illustrations are the same as corresponding parts shown with numbers.

When ordering, always use I H C Part Nos.

Ref. No.	I H C Part No.	Description
1	23995 D	Cap.
2	23977 DA	Gasket.
3	41574 DAX	Gasoline tank with cap.
...	.....	Capscrew, 3/8" x 3/4" N.C.
...	.....	Lockwasher, 3/8".
4	23125 D	Clip.
5	16445 D	Felt.
6	42404 DX	Gasoline pipe.
7	29899 D	Coupling nut.
8	42870 D	Carburetor.
9	49711 DAX	Fuel pipe.
10	38026 DMX	Pipe connector.
11	37165 D	Coupling nut.
12	54922 DX12	Injection pump.
13	54977 DX	Fuel pipe.
14	54978 DX	Return pipe.
15	37165 D	Coupling nut.
16	42406 DX	Elbow.
17	48231 D	Valve.
18	48438 D	Fuel pipe.
19	28899 DB	Return pipe.
20	42387 D	Cap.
21	42495 D	Gasket.
22	42400 DCX	Fuel tank with cap.
...	.....	Capscrew, 3/8" x 1-1/2" N.F.
...	.....	Hex. nut, 3/8" N.F.
...	.....	Capscrew, 1/2" x 1-1/4" N.C.
...	.....	Capscrew, 1/2" x 3/4" N.C.
...	.....	Lockwasher, 1/2".
23	51066 DX	Gasoline strainer.
24	.....	Fuel filter.
25	37323 DX	Elbow.
26	38026 DMX	Pipe connector.
27	37165 D	Coupling nut.
28	9982 T	Drain cock.
29	42797 DAX	Fuel pipe.
30, 31	37165 D	Coupling nut.
32	37323 DX	Elbow.
33	37165 D	Coupling nut.
34	42411 DX	Elbow.
35	37165 D	Coupling nut.
36	42409 DX	Connector.
37	42399 DA	Water trap.
38	42408 DX	Fuel pipe.
39	37165 D	Coupling nut.
40	42406 DX	Elbow
41, 42	42385 D	Elbow.
...	.....	Capscrew, 3/8" x 1-1/2" N.F.
...	.....	Hex. nut, 3/8" N.F.
...	.....	Lockwasher, 3/8".
43	42393 D	Fuel pipe.
44	42385 D	Clamp.
...	.....	Capscrew, 5/8" x 1-1/2" N.F.
...	.....	Hex. nut, 3/8" N.F.
...	.....	Lockwasher, 3/8".
45	48232 D	Elbow.
46	48233 D	Elbow.
47	42384 DXa	Stand pipe.
48	24855 D	Coupling nut (fuel tube).
49	29899 D	Gasoline pipe coupling nut.
50	16718 D	Coupling nut (fuel return tube).

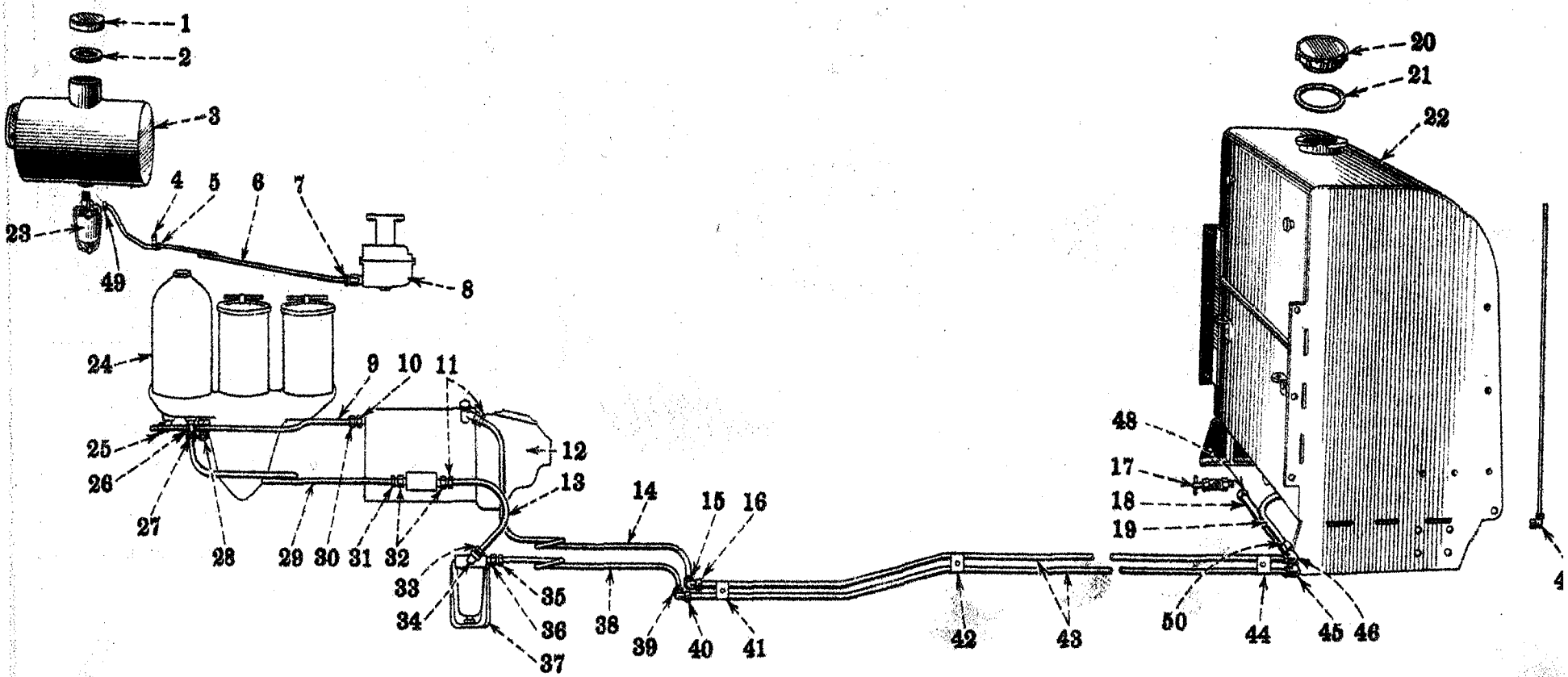

Unnumbered parts in the illustrations are the same as corresponding parts shown with numbers.

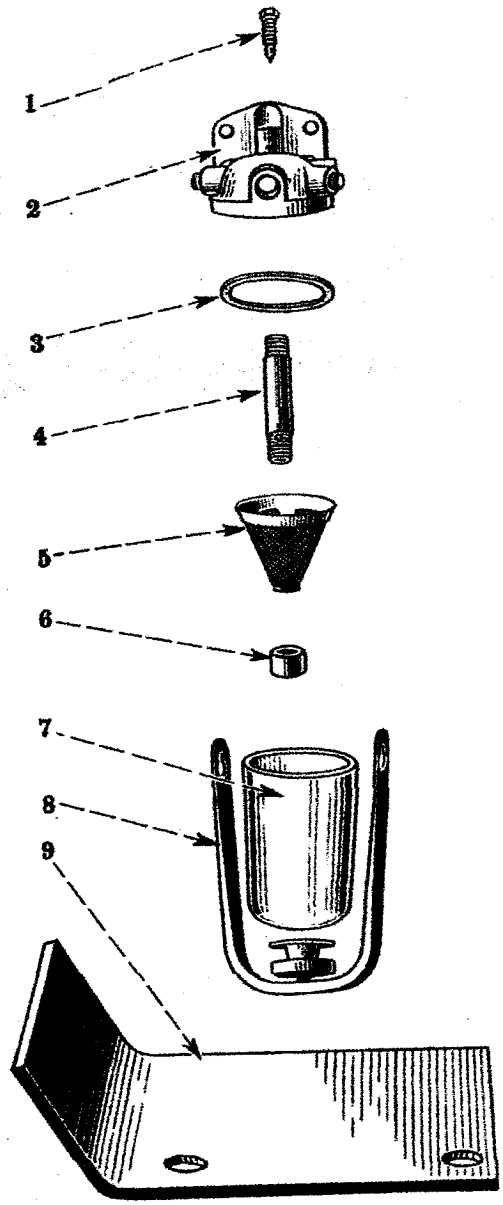

When ordering, always use I H C Part Nos.

Ref. No.	I H C Part No.	Description
...	42399 DA	Water trap, complete.
1	25329 D	Bleeder.
2	42398 DAX	Top.
3	28910 DA	Gasket.
4	29352 D	Pipe.
5	29353 DAX	Screen.
6	29356 D	Cap.
7	28909 D	Glass.
8	28908 D	Strap.
9	43183 D	Guard.
...	.....	Capscrew, 7/8" x 2" N.F.
...	.....	Hex. nut, 7/8" N.F.
...	.....	Lockwasher, 7/8".

Parts numbers from the illustrations only: refer to the list also.

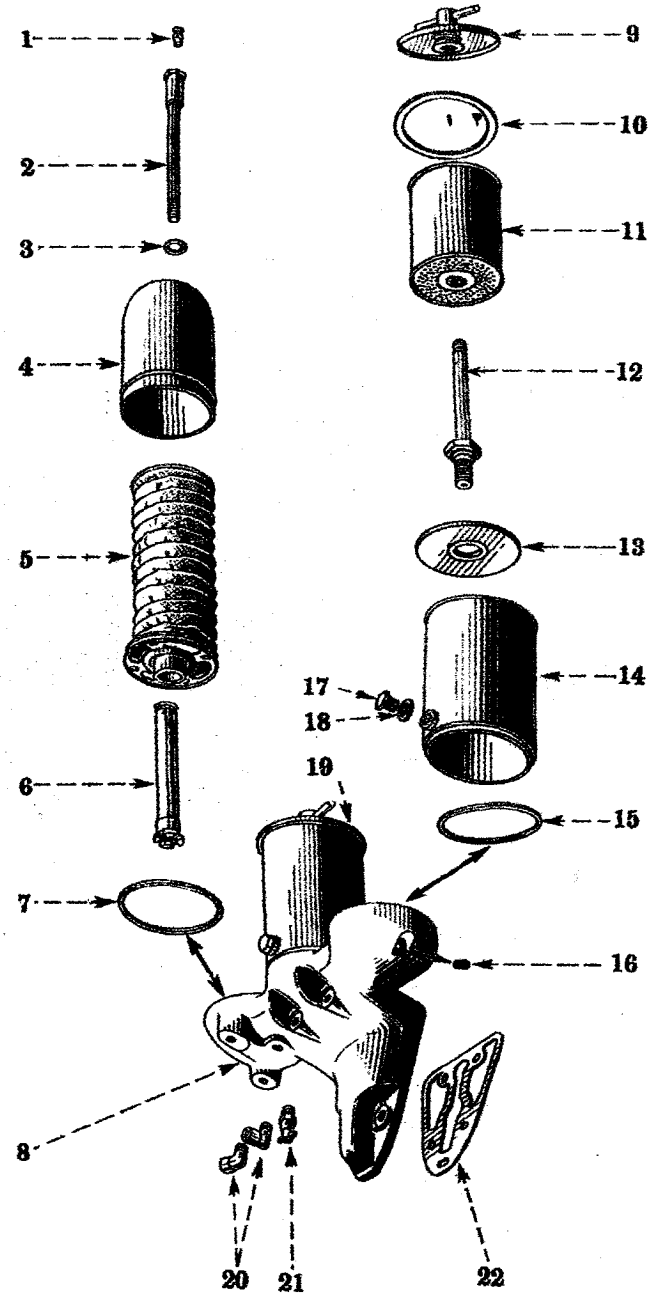

When ordering, always use I H C Part Nos.

Unnumbered parts in the illustrations are the same as corresponding parts shown with numbers.

Ref. No.	I H C Part No.	Description	Ref. No.	I H C Part No.	Description
1	39677 D	Bleeder.	11	42366 D	Metal element.
2	39577 DA	Stud.	12	41747 DX	Bar assembly.
3	13839 D	Stud gasket.	13	42369 DA	Plate.
4	28772 D	Case.	14	42372 D	Case assembly.
5	29501 DA	Cloth element.	15	41746 D	Gasket.
6	28809 D	Metal element.	16	.....	Plug, 1/8".
7	13841 D	Gasket.	17	42368 D	Drain plug.
8	5990 DX	Base, complete.	18	42367 D	Drain plug gasket.
...	.....	Capscrew, 1/2" N.C.x4-3/4".	19	41745 DAX	Lubricating oil filter.
...	.....	Capscrew, 1/2" N.C.x1-1/2".			
...	.....	Lockwasher, 1/2".	20	37323 D	Elbow.
...	.....	Headless ctsk. pipe plug.	21	9982 T	Drain cock.
9	42356 D	Cover assembly.	22	42959 D	Base gasket.
10	42371 DA	Cover gasket.			

Ref. No.	I H C Part No.	Description
1	54125 D	Control rod spring.
2	14611 H	Yoke pin.
...	.....	Cotter, 1/16" x 3/4".
3	8528 D	Bell crank.
4	41958 DA	Adjusting block.
...	.....	Washer, 3/8" I.D.x 11/16" O.D.
...	.....	Cotter, 3/32" x 3/4"
5	5971 D	Cross shaft bracket.
...	.....	Capscrew, 1/2" N.C. x 1-1/4".
...	.....	Lockwasher, 1/2".
6	42759 D	Screw.
...	.....	Cotter, 3/32" x 1-1/4".
7	28950 D	Washer.
8	42976 D	Governor control lever pin.
9	42975 DX	Governor control lever.
10	42753 D	Cross shaft starting lever pin.
...	.....	Washer, 15/32" I.D. x 13/16" O.D.
...	.....	Cotter, 3/32" x 5/8".
11	42973 DX	Cross shaft starting lever, cp.
12	42974 D	Lever adjuster,
...	.....	Capscrew, 5/16" N.F. x 7/8".
...	.....	Hex. nut, 5/16" N.F.
...	.....	Lockwasher, 5/16".
13	20586 D	Pin.
...	.....	Hex. nut, 5/16" N.F.
...	.....	Lockwasher, 5/16".
...	.....	Washer, 11/32" I.D. x 11/16" O.D.
14	42760 D	Oil seal.
15	42754 D	Inner lever.
16	32469 DX	Shaft, rear.
17	24917 D	Pin.
18	24916 D	Roller.
19	32471 DA	Gear (8 teeth).
20	5972 DX	Bracket.
21	42751 D	Starting valve cross shaft.
22	32460 D	Oil seal.
23	20586 D	Pin.
...	.....	Hex. nut, 5/16" N.F.
...	.....	Lockwasher, 5/16".
24	42758 D	Adjuster.
...	.....	Capscrew, 5/16" N.F. x 7/8".
...	.....	Lockwasher, 5/16".
...	.....	Hex. nut, 5/16" N.F.
...	.....	Washer, 11/32" I.D. x 11/16" O.D.

Ref. No.	I H C Part No.	Description
25	42761 D	Stud.
...	.....	Cotter, 3/32" x 7/8".
...	.....	Washer, 19/32" I.D. x 1" O.D.
26	42757 D	Cross shaft release lever.
27	14611 H	Air valve control rod pin.
...	.....	Cotter, 1/16" x 7/16".
28	17730 D	Air valve control rod yoke.
29	.....	Nut, 1/4", type "B".
30	42780 DX	Air valve control rod, cp.
...	.....	Hex. nut, 1/4" N.F.
31	54123 DX	Governor control rod, upper.
32	54124 D	Trunnion guide.
33	42981 DA	Trunnion.
...	.....	Washer, 13/32" I.D. x 3/4" O.D.
...	.....	Cotter, 3/32" x 5/8".
34	54122 DX	Control rod, lower.
35	42777 D	Bell crank stud.
...	.....	Washer, 13/32" I.D. x 3/4" O.D.
...	.....	Cotter, 3/32" x 5/8".
36	42755 D	Cross shaft spring.
...	.....	Washer, 19/32" I.D. x 1" O.D.
...	.....	Cotter, 3/32" x 7/8".
37	42756 D	Spring anchor stud.
38	32470 D	Shaft, center.
39	32469 D	Shaft, front.
40	42750 D	Spring retainer.
...	.....	Cotter, 3/32" x 1-1/2".
41	32479 D	Starting valve spring.
42	5024 D	Guide.
43	42749 D	Starting valve.
44	42777 D	Stud.
45	42770 DX	Carburetor control rod, cp.
...	.....	Cotter, 1/16" x 7/16".
46	42778 DX	Trip operating rod, upper, cp.
47	42776 D	Trip bell crank.
48	42779 DX	Trip operating rod, lower, cp.
...	.....	Hex. nut, 1/4" N.F.
49	17730 D	Trip operating rod yoke.
50	14611 H	Pin.
...	.....	Cotter, 1/16" x 7/16".
51	42764 D	Release lever.
52	14611 H	Air valve control rod pin.
...	.....	Cotter, 1/16" x 7/16".
...	19306 D	Governor control rod yoke pin, upper.
...	.....	Cotter, 3/32" x 1/2".
...	14611 H	Carburetor control rod pin.

GOVERNOR CONTROL AND STARTING VALVE MECHANISM

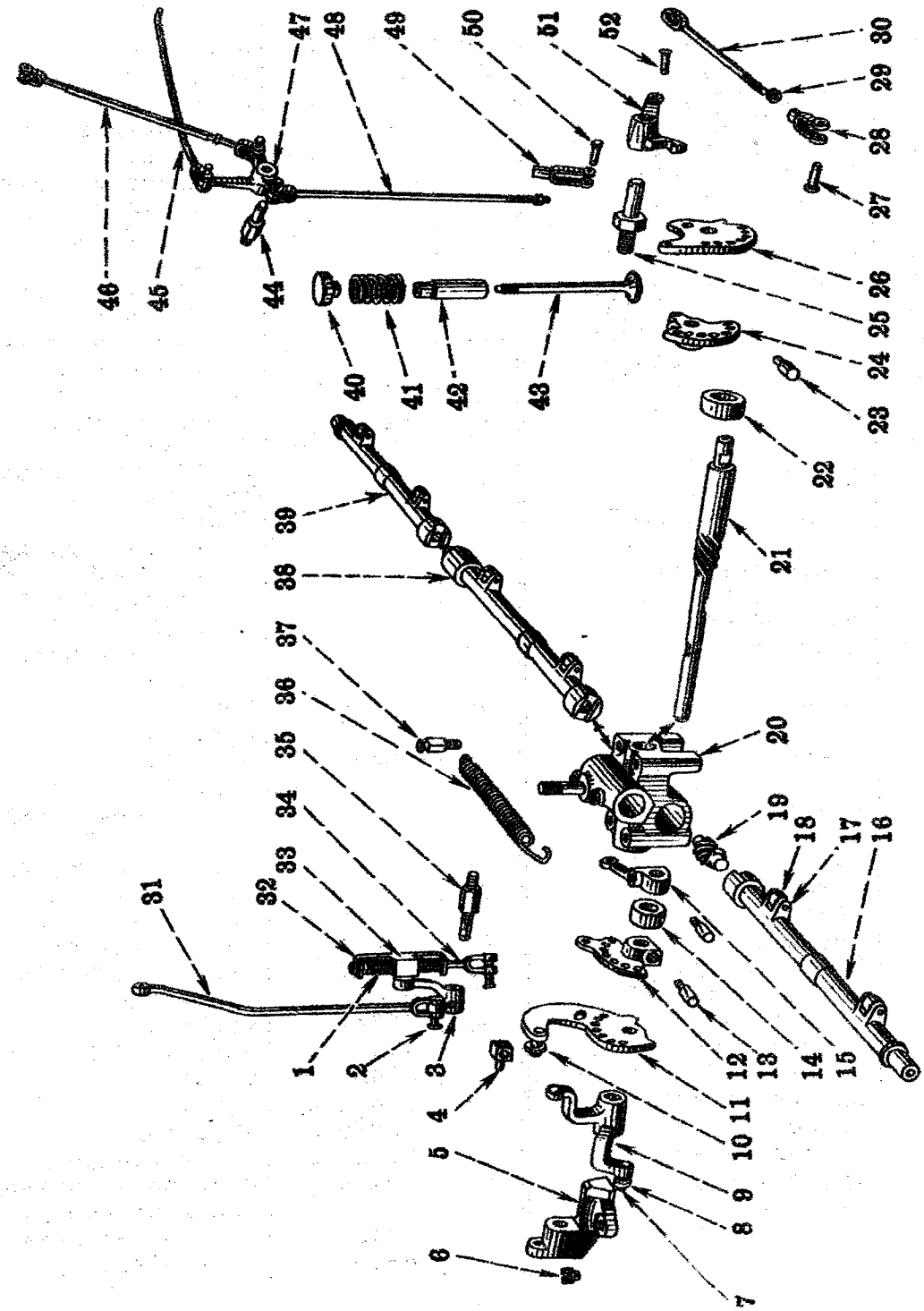

Unnumbered parts in the illustrations are the same as corresponding parts shown with numbers.

INJECTION PUMP CONNECTIONS - Continued

Ref. No.	I H C Part No.	Description
..	54922 DX12	Injection pump, complete.
...	.....	Capscrew, 3/8" x 7/8" N.C.
...	.....	Lockwasher, 3/8".
...	54910 D	Set of six (6) injection pipes.
1	54911 DX	Pipe, complete(No.1).
2	54912 DX	Pipe, complete(No.2).
3	54913 DX	Pipe, complete(No.3).
4	54914 DX	Pipe, complete(No.4).
5	54915 DX	Pipe, complete(No.5).
6	54916 DX	Pipe, complete(No.6).
7	52613 D	Nozzle, complete.
8	27927 DA	Washer.
9	42799 D	Clip, front.
9	56617 D	Clip, rear.
...	.....	Capscrew, 3/8" N.C. x 3/4".
...	.....	Lockwasher, 3/8".
10	.....	Washer, 5/16".
11	.....	Nut, 5/16".
[illegible]	5986 D	Bracket.
...	.....	Capscrew, 1/2" N.C. x 1-1/2".
...	.....	Lockwasher, 1/2".
13	32493 D	Bleeder valve.
14	52612 D	Nozzle fitting.
15	37150 D	Spacer.
16	37148 D	Gasket.
17	37152 D	Valve and spring assembly.
18	43192 D	Plate.
19	37148 D	Gasket.
20	42766 D	Nozzle body.
...	.....	Capscrew, 3/8" N.F. x 2".
21	42767 D	Nozzle body gasket.
22	42765 D	Nozzle body retainer.
23	43002 D	Spacer gasket.
24	56291 D	Spacer.
25	43002 D	Spacer gasket.
26	50980 D	Injection pump overflow pipe.
7	50979 D	Injection pump overflow pipe clip.
28	25362 D	Gear (54 teeth).

Ref. No.	I H C Part No.	Description
29	25354 D	Nut lock.
30	.....	Nut, 3/4".
31	32341 D	Lock.
32	32340 D	Housing gasket.
33	5005 DAX	Housing.
...	.....	Capscrew, 1/2" N.F. x 1-3/4".
...	.....	Capscrew, 1/2" N.C. x 1".
...	.....	Capscrew, 1/2" N.F. x 3-3/4".
...	.....	Capscrew, 1/2" N.C. x 1-3/4".
...	.....	Hex. nut, 1/2" N.F.
...	.....	Lockwasher, 1/2".
34	10701 DA	Bearing.
35	49453 DX	Drive gear assembly.
36	23874 D	Bearing.
37	32345 D	Shaft.
...	.....	Castle hex. nut, 1/2" N.F.
...	.....	Cotter, 3/32" x 7/8".
...	.....	Hex. jam nut, 3/4" N.F.
38	4710 D	Key.
39	7220 T	Key.
40	32342 D	Gasket.
41	5006 DAX	Cap, complete.
...	.....	Capscrew, 3/8" N.C. x 1-1/4".
...	.....	Lockwasher, 3/8".
42	12480 L	Oil seal.
43	32362 D	Felt.
44	32343 D	Felt retainer.
45	32346 DAX G 3836	Flange with pin. Dowel pin.
46	32347 D	Washer.
47	.....	Nut, 1/2" N.F.
48	31439 DB	Spacer.
49	31441 D	Boot.
50	33275 D	Adjuster.
51	51897 D	Drive flange.
52	49454 D	Hour meter driven gear assembly.
53	49451 D	Hour meter gasket.
54	49450 D	Hourmeter.
...	.....	Lockwasher, 1/4".
55	23086 D	Hour meter cap screw.

When ordering, always use I H C Part Nos.

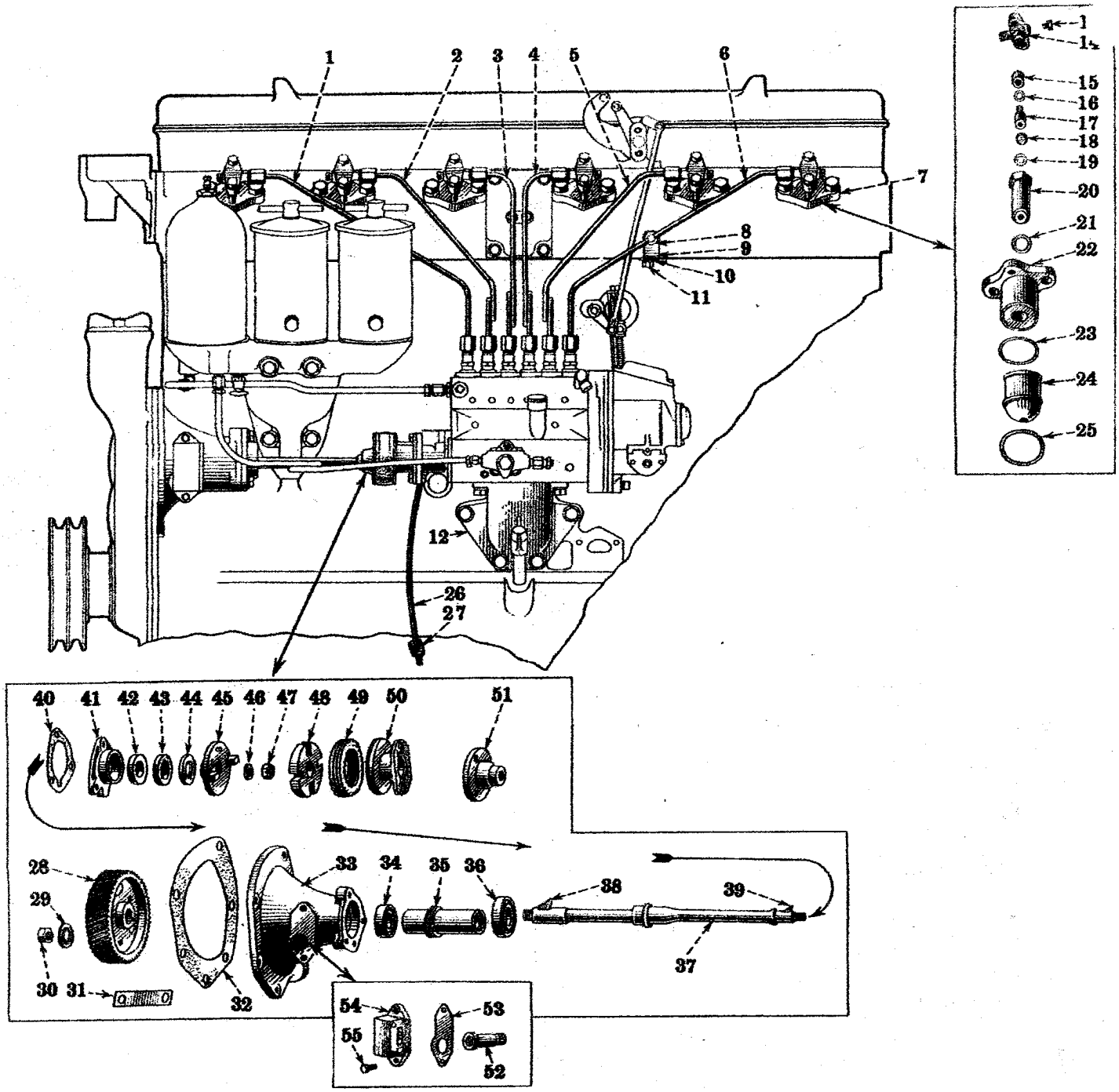

Unnumbered parts in the illustrations are the same as corresponding parts shown with numbers.

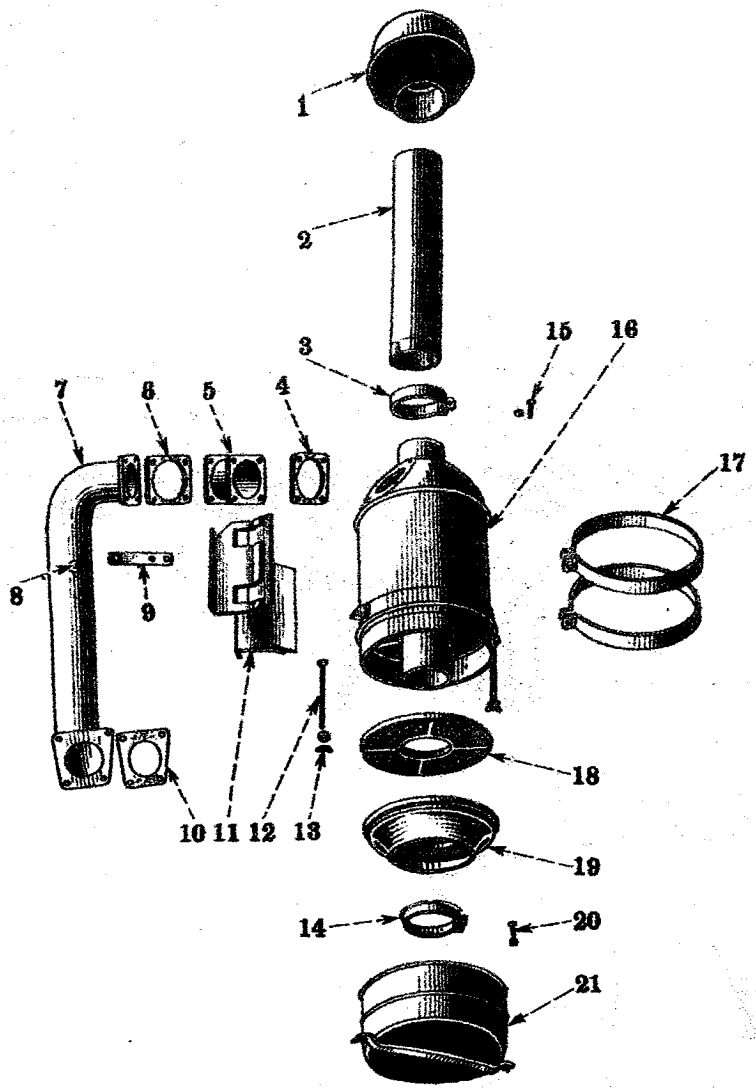

Unnumbered parts in the illustrations are the same as corresponding parts shown with numbers.

Ref. No.	I H C Part No.	Description
...	51232 D	Air cleaner, complete.
1	49364 D	Intake cap.
2	47704 DA	Intake pipe.
3	45908 DA	Pipe clamp.
...	.....	Capscrew, 3/8" x 1" N.C.
...	.....	Hex. nut, 3/8" N.C.
...	.....	Lockwasher, 3/8".
4	41637 D	Coupling flange.
5	41640 D	Pipe coupling.
6	41637 D	Coupling flange.
...	.....	Capscrew, 3/8" x 1" N.C.
7	5836 DX	Pipe.
...	.....	Capscrew, 3/8" x 1-3/8" N.C.
...	.....	Capscrew, 3/8" x 1" N.F.
...	.....	Hex. nut, 3/8" N.F.
...	.....	Lockwasher, 3/8".
8	41633 D	Pipe brace stud.
...	.....	Hex. nut, 3/8" N.F.
...	.....	Lockwasher, 3/8".
9	41639 D	Pipe brace.
...	.....	Capscrew, 3/8" x 1" N.C.
...	.....	Lockwasher, 3/8".
10	41638 D	Pipe gasket.
11	46764 D	Bracket.
...	.....	Capscrew, 1/2" x 1" N.C.
12	.....	Bolt, 5/16" x 5-1/2".
13	.....	Wing nut, 5/16".
14	45907 D	Screen clamp.
15	.....	Bolt, 3/8" x 1".
16	45903 DA	Body.
17	41632 D	Bracket band.
...	.....	Capscrew, 7/16" x 1-3/4" N.F.
...	.....	Hex. nut, 7/16" N.F.
...	.....	Lockwasher, 7/16".
18	45906 DA	Screen.
19	45905 DB	Screen and baffle.
20	.....	Fil. head bolt, 1/4 x 1" and nut.
21	45904 DB	Oil cup.

THERMOSTAT

When ordering, always use I H C Part Nos.

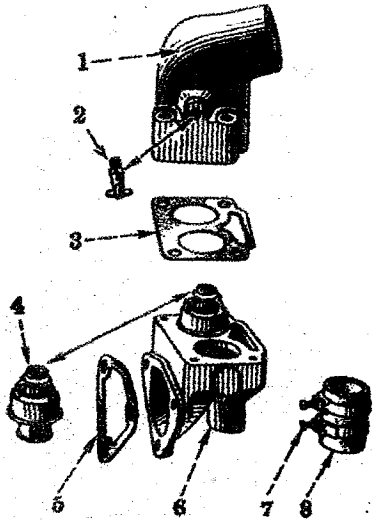

Ref. No.	I H C Part No.	Description
1	5952 D	Thermostat housing.
...	.....	Capscrew, 1/2" N.C. x 2-1/2".
...	.....	Lockwasher, 1/2".
2	9982 T	Vent cock.
3	42655 D	Thermostat housing gasket.
4	37634 D	Thermostat.
5	42654 D	Water outlet gasket.
6	5951 D	Water outlet.
...	.....	Capscrew, 1/2" N.C. x 1-1/2".
...	.....	Lockwasher, 1/2".
7	29979 D	Hose clamp.
8	42656 D	Hose.

GASOLINE STRAINER ASSEMBLY

When ordering, always use I H C Part Nos.

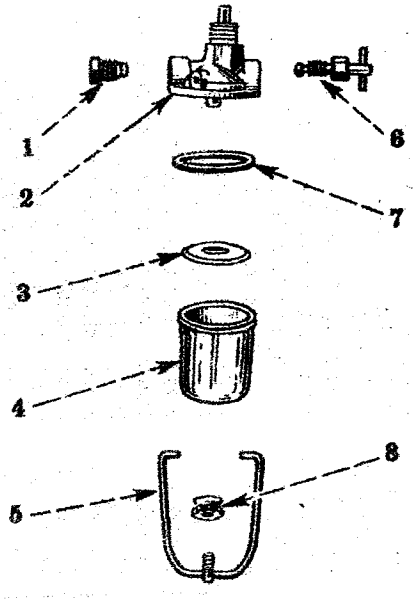

Ref. No.	I H C Part No.	Description
...	51066 DX	Gasoline strainer, complete.
1	29899 D	Coupling nut.
2	54486 D	Top or body.
3	13194 D	Screen.
4	51344 V	Glass.
5	17564 D	Bail or strap.
6	54487 D	Valve.
7	13193 D	Gasket.
8	17565 DA	Nut and cap.

Ref. No.	I H C Part No.	Description
...	42686 D	Fan and water pump, complete.
1	32350 D	Pump body cover.
2	32351 D	Pump body cover gasket.
3	5008 DBX	Pump impeller with washer.
4	20298 DA	Pump impeller thrust washer.
5	43222 VA	Pump impeller pin.
6	32355 DA	Pump shaft.
7	32353 D	Shaft and sleeve assembly.
8	30824 D	Pump body gasket.
9	5950 DX	Pump body, complete.
...	.....	Capscrew, 1/2" N.C. x 3-1/2".
...	.....	Capscrew, 1/2" N.C. x 2-3/4".
...	.....	Capscrew, 1/2" N.C. x 3-1/4".
...	.....	Capscrew, 1/2" N.C. x 2-1/2".
...	.....	Lockwasher, 1/2".
...	.....	Pipe plug, 1/4".
10	Q 3615	Lubricator.
11, 12	19175 CA	Lubricator with cap.
13	20308 D	Pump ball bearing (optional).
	ST 205	Pump ball bearing (optional).
14	5010 DAX	Pump pulley, cp.
15	32356 D	Pump bearing spacer.
16	27654 D	Pump bearing retainer ring.
17	20308 D	Pump ball bearing (optional).
	ST 205	Pump ball bearing (optional).
18	20289 D	Oil seal.
19	32624 D	Bearing retainer gasket.
20	5009 DX	Bearing retainer, cp.
...	.....	Capscrew, 3/8" N.C. x 1".
...	.....	Lockwasher, 3/8".
21	20293 D	Bearing lock sleeve.
22	34315 H	Fan pulley bearing clamp nut.
23	20296 D	Pump packing gland.
24	20303 D	Pump shaft thrust bushing.
25	32354 D	Pump shaft sleeve.
26	24017 D	Pump shaft bushing.
27	50790 D	Pump packing.
28	32352 D	Pump body cover stud.
...	.....	Hex. nut, 5/16" N.F.
...	.....	Lockwasher, 5/16".
29	32349 D	Pump body spacer.
30	20300 D	Pump felt washer.
31	20290 D	Oil seal.

Ref. No.	I H C Part No.	Description
32	42937 DX	Fan belt, complete (2 belts).
33	34321 HA	Pump driving stud.
...	.....	Lockwasher, 3/8".
34	G 3792	Pump drive spring.
35	20585 D	Pump driver.
36	20586 D	Driver pin.
...	.....	Hex. nut, 5/16" N.F.
...	.....	Lockwasher, 5/16".
37	32357 D	Fan assembly.
38	42938 D	Fan belt idler shaft.
...	.....	Hex. jam nut, 5/8" N.F.
...	.....	Lockwasher, 5/8".
39	13085 D	Fan belt idler pulley key.
40	42941 D	Idler shaft felt.
41	42939 D	Idler bearing lock ring.
42	5987 DX	Idler bracket, cp.
...	.....	Pipe plug, 1/8".
...	.....	Capscrew, 1/2" N.F. x 4-1/2".
...	.....	Hex. nut, 1/2" N.F.
...	.....	Lockwasher, 1/2".
43	32523 D	Idler pulley brace.
...	.....	Capscrew, 3/8" N.C. x 1".
...	.....	Capscrew, 3/8" N.F. x 1-1/4".
...	.....	Hex. nut, 3/8" N.F.
...	.....	Lockwasher, 3/8".
...	.....	Washer, 13/32" I.D. x 3/4" O.D.
44	5988 D	Idler bearing spacer.
45	1266 C	Idler bearing.
46	42940 D	Idler oil seal.
47	42943 D	Idler pulley felt.
48	5989 D	Idler pulley.
49	.....	Lockwasher.
50	.....	Nut, 5/8" N.F.
51	42942 D	Idler shaft felt retainer.
52	42940 D	Idler oil seal.
53	8522 T	Idler bearing.
54	Q 3615	Lubricator.
55	.....	Plug, 1/8".
56	5420 DX	Fan drive pulley.
57	36794 D	Vibration damper.
58	36795 DA	Lock (vibration damper).
...	.....	Capscrew, 3/8" N.C. x 3/4".
59	18767 D	Lockwasher (starting nut).
60	5421 D	Nut (starting).
...	10639 D	Vibration damper dowel.

FAN AND WATER PUMP, IDLER, DRIVE PULLY AND DAMPENER

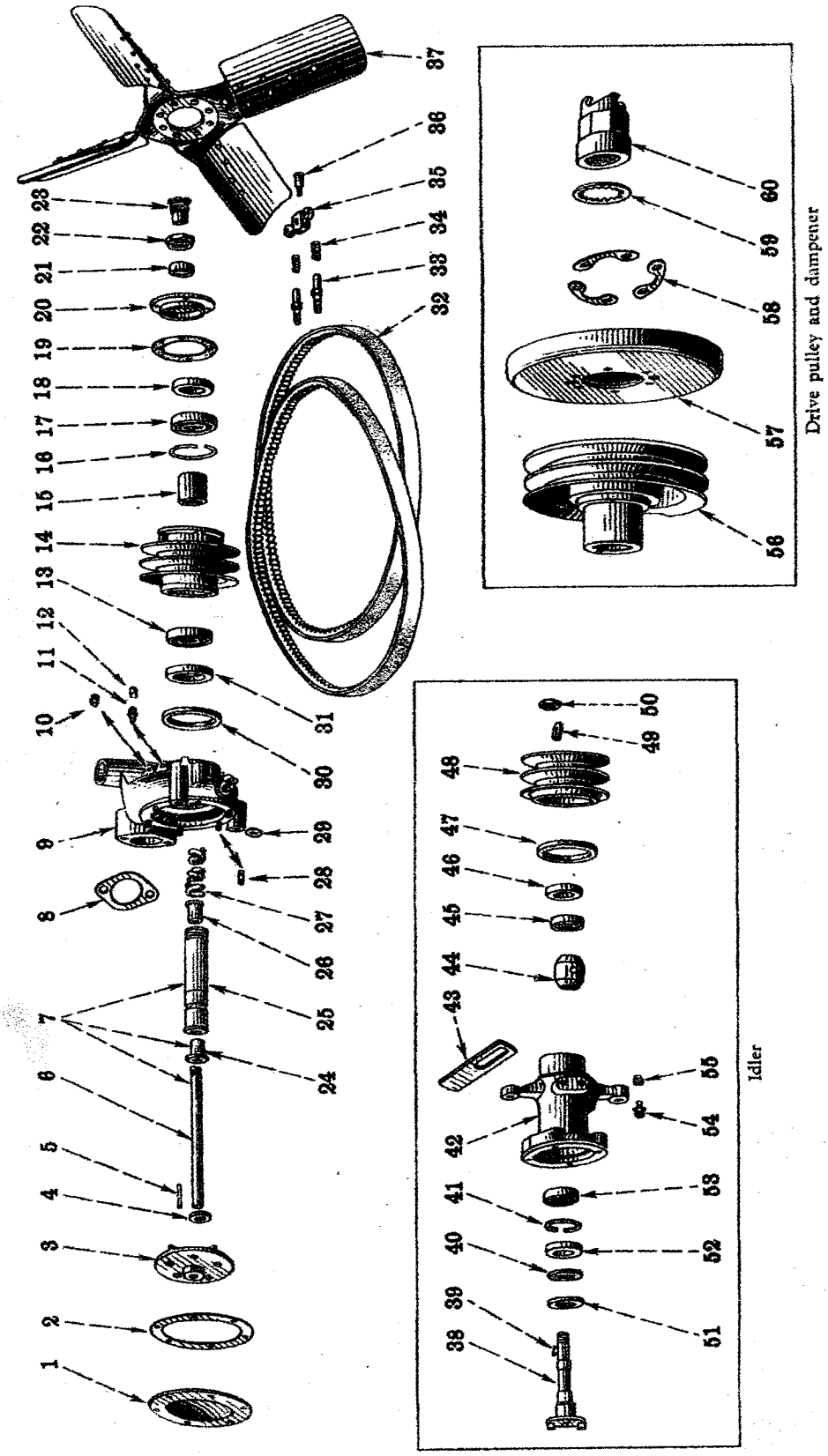

Unnumbered parts in the illustrations are ame as corresponding parts shown with numbers.

MANIFOLDS - INTAKE AND EXHAUST - Continued

When ordering, always use I H C Part Nos.

Ref. No.	I H C Part No.	Description
1	42663 D	Spring.
2	42665 D	Cup.
3	42664 D	Washer.
4	42673 D	Switch contact.
...	.....	Slotted screw, No. 10 - 32 x 3/8".
...	.....	Lockwasher, No. 10.
5	42674 D	Spring.
...	.....	Capscrew, 1/4" N.F. x 1-1/2".
...	.....	Washer, 17/64" I.D. x 5/8" O.D.
...	.....	Hex. jam nut, 1/4" N.F.
6	42676 D	Insulator.
7	42678 D	Insulating tube.
8	13090 D	Housing plug.
9	42669 D	Pivot.
10	41641 DX	Exhaust pipe.
11	5953 DX	Housing.
...	.....	Capscrew, 7/16" N.C. x 1-1/4".
...	.....	Lockwasher, 7/16".
12	19962 D	Stud nut.
	25122 D	Stud.
	.....	Hex. nut, 1/2" N.C.
14	5046 DBX	Exhaust manifold.
15	25125 D	Stud, 1/2".
16	42660 D	Air valve.
17	32360 D	Exhaust gasket.
18	32366 D	Center gasket.
19	43371 DX	Primer spray tube, complete.
20	32495 D	Intake gasket.
21	42216 DX	Tube assembly end.
22	43369 D	Primer pipe, L.H.
23	43368 D	Center pipe.
24	43372 DX	Primer pipe tee.
25	25125 D	Stud, 1/2".
26	42651 DX	Short circuiting cable.
	(consists of):	
	27618 D	Magneto short circuiting cable loom clamp ring.
	38433 D	Magneto short circuiting cable terminal.
	42651½D	Magneto short circuiting cable.
	42652 D	Magneto short circuiting cable loom.
	29016 H	Magneto short circuiting cable terminal switch end.

Ref. No.	I H C Part No.	Description
27	42675 D	Reinforcement.
28	42677 D	Insulating washer.
29	Q 103	Washer.
30	.....	Lockwasher, 1/4".
31	.....	Nut, 1/4" N.F.
32	42679 D	Cover.
...	.....	Slotted screw, No. 10 - 24 x 1/2".
...	.....	Lockwasher, No. 10.
33	42680 D	Gasket.
34	23007 V	Cover plug.
35	5954 DX	Housing cover.
...	.....	Capscrew, 3/8" N.C. x 1".
...	.....	Lockwasher, 3/8".
36	42672 D	Housing gasket.
37	42666 DX	Yoke.
38	42668 D	Yoke pin.
...	.....	Cotter, 1/16" x 5/8".
39	42670 D	Valve lever, inner.
...	.....	Capscrew, 5/16" N.F. x 1".
...	.....	Lockwasher, 5/16".
40	42662 D	Pin retainer.
41	42661 D	Pin.
42	4167 T	Key.
43	42671 D	Shaft.
44	17741 D	Pin.
45	42782 D	Control lever, outer.
...	.....	Capscrew, 5/16" N.F. x 1".
...	.....	Lockwasher, 5/16".
46	42657 D	Ring.
47	42659 D	Gasket.
48	42658 D	Valve sleeve.
49	5955 DX	Intake manifold.
...	.....	Headless pipe plug, 1/4".
50	43370 D	Primer end pipe, R.H.
51	36092 D	Nut.

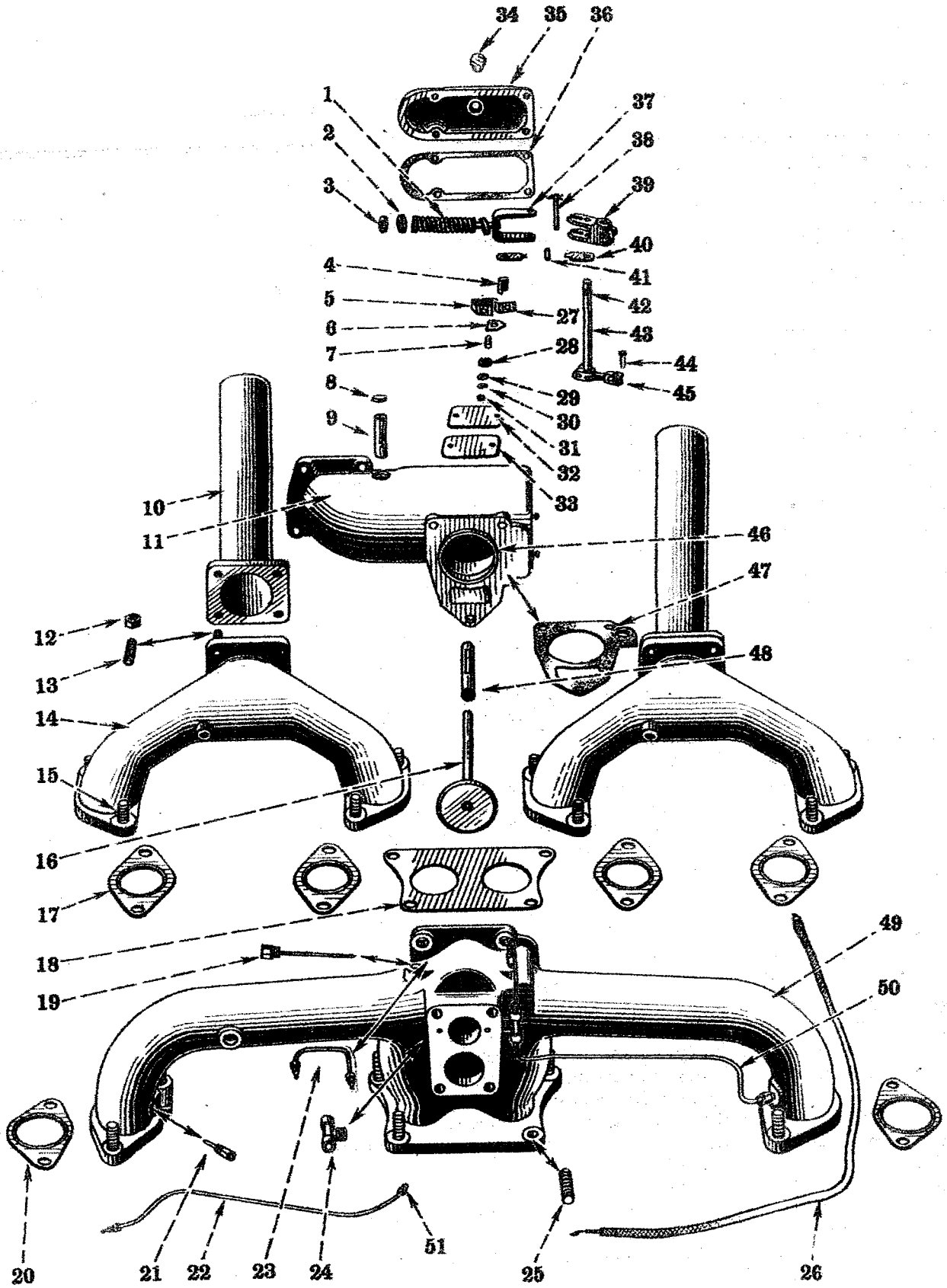

Unnumbered parts in the illustrations are the same as corresponding parts shown with numbers.

LUBRICATING OIL PUMP - Continued

When ordering, always use I H C Part Nos.

Ref. No.	I H C Part No.	Description
...	42794 D	Lubricating oil pump, complete.
1	46054 DA	Pinion (14 teeth).
2	13021 D	Key.
3	.....	Lockwasher.
4	10961 D	Capscrew.
...	.....	Lockwasher, 1/2".
5	5981 DX	Body with shaft.
6	42786 D	Idler gear shaft.
7	50336 D	Idler gear (12 teeth).
8	5982 DAX	Housing, upper.
...	.....	Capscrew, 3/8" N.C. x 1-3/4".
...	.....	Lockwasher, 3/8".
9	45285 DA	Regulating valve.
10	48695 D	Spring.
11 } 12 }	51516 D	Auxiliary idler gear (12 teeth).
13	42792 D	Gasket.
14	43003 DX	Oil return pipe, front.
...	.....	Capscrew, 5/16" N.C. x 3/4".
...	.....	Lockwasher, 5/16".
...	.....	Capscrew, 3/8" N.C. x 3/4".
...	.....	Lockwasher, 3/8".
15	42791 DA	Float.
...	.....	Cotter, 1/8" x 1-1/2".
16	5963 DX	Crankcase oil pan.
...	.....	Capscrew, 3/8" N.C. x 1-1/4".
...	.....	Lockwasher, 3/8".
...	.....	Hex. nut, 3/8" N.F.
17	42716 D	Oil pan side plate.
...	.....	Capscrew, 3/8" N.C. x 1".
...	.....	Lockwasher, 3/8".
18	5312 T#3	Pin.
19	42783 DXb	Shaft with pin.
20	32319 D	Pin.
21	43004 DX	Oil return pipe, rear.
22	50335 D	Body gear (12 teeth).
23	42789 D	Housing gasket, upper.
24	46053 D	Upper housing dowel pin.
25	42790 D	Housing gasket, lower.
26	51515 D	Auxiliary body gear (12 teeth).
27	5983 D	Housing, lower.
28	42790 D	Cover gasket.
29	51515 D	Auxiliary body gear (12 teeth).
30	5984 DX	Cover with pin.
...	.....	Capscrew, 3/8" N.C. x 3".
...	.....	Capscrew, 3/8" N.C. x 3-3/4".
...	.....	Lockwasher, 3/8".
31	46052 D	Dowel pin.
32	42715 D	Crankcase oil pan gasket.
33	42795 DX	Oil level gauge.
34	.....	Pipe plug, 1".
35	32517 DA	Oil pan side plate gasket.

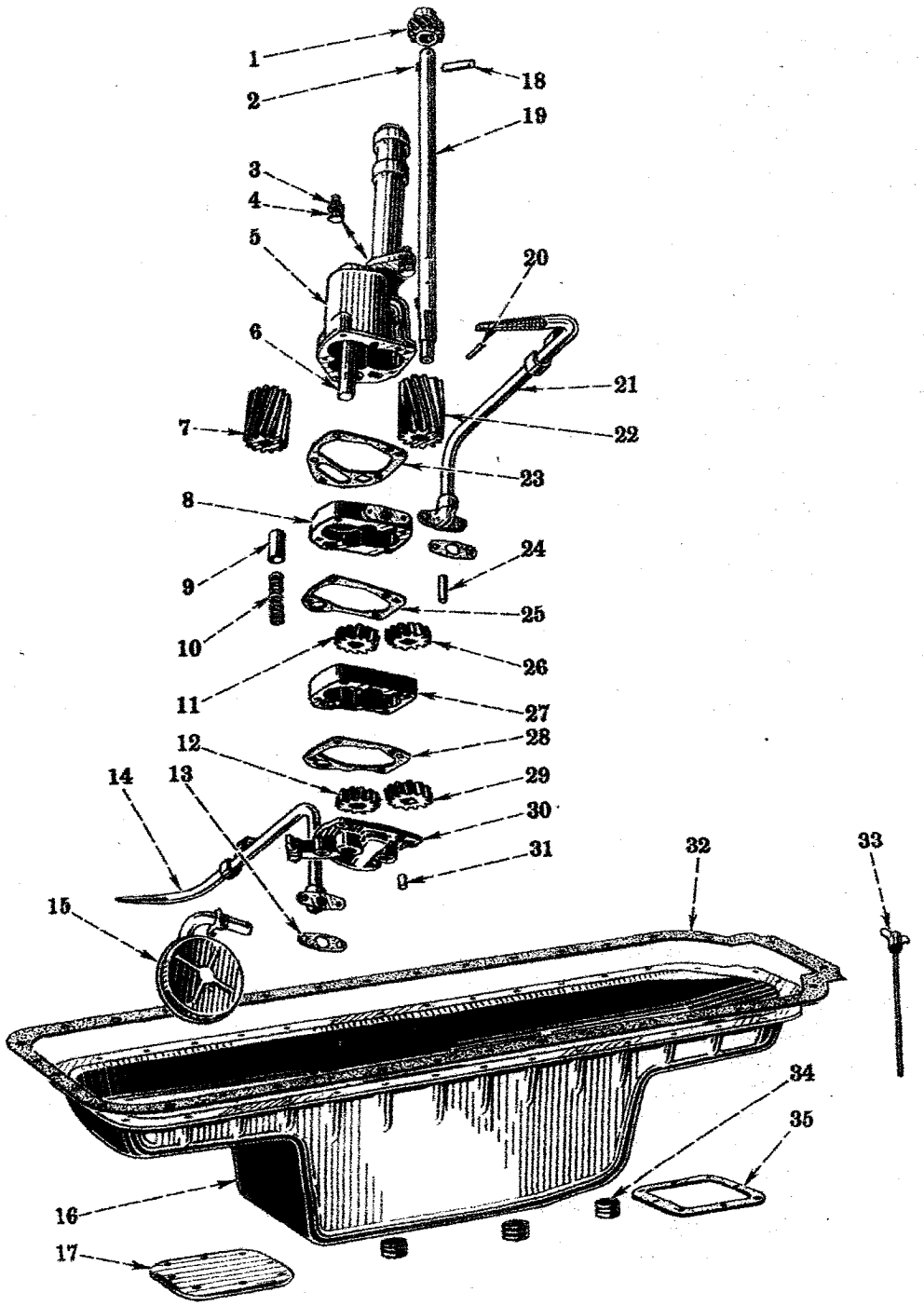

Unnumbered parts in the illustrations are the same as corresponding parts shown with numbers.

AUTOMATIC TRIP MECHANISM - Continued

Ref. No.	I H C Part No.	Description
...	49043 D	Automatic trip mechanism, complete.
1	4167 T	Key.
2	42734 D	Shaft (20 teeth).
3	42722 D	Bushing, upper.
4	42724 D	Collar.
5	47928 D	Clutch.
6	2058¾T	Collar pin.
7	42723 D	Spline bushing.
8	42726 DBX	Spline with bushing.
9	42723 D	Spline bushing.
10	42723 D	Bushing, lower.
11	13090 D	Disc shaft plug.
12	42732 D	Disc shaft.
13	23007 V	Control shaft plug.
14	42737 D	Control shaft retainer.
15	42736 D	Spacer.
16	42735 D	Control shaft.
17	42740 DA	Yoke.
18	42743 D	Yoke pin.
19	48240 DA	Clutch lever.
20	42733 D	Housing gasket (.032") (optional).
	46998 D	Housing gasket (.015") (optional).
	46999 D	Housing gasket (.046") (optional).
21	5966 DAX	Housing.
...	.....	Capscrew, 3/8" N.C. x 1".
...	.....	Lockwasher, 3/8".
...	.....	Slotted headless pipe plug, 1/4".
22	42746 D	Oil seal.
23	.....	Plug, 1/4".
24	43222 VA	Disc shaft pin.
25	42727 DX	Gear (40 teeth).
26	42731 DA	Disc spring.
27	42728 D	Gear pin.
28	42730 D	Disc pin.
29	46710 DB	Return spring.
30	42729 DX	Disc, complete with pin.
31	42741 DB	Yoke spring.
32	47930 D	Clutch stop.
33	42739 D	Clutch lever pin.
...	.....	Hex. nut, 1/4" N.F.
...	.....	Lockwasher, 1/4".
34	48477 D	Return spring pin.
35	47931 D	Washer.
36	42739 D	Control lever pin.
...	.....	Hex. nut, 1/4" N.F.
...	.....	Lockwasher, 1/4".
37	42745 D	Control lever.
...	39482 D	Trip mechanism housing dowel.

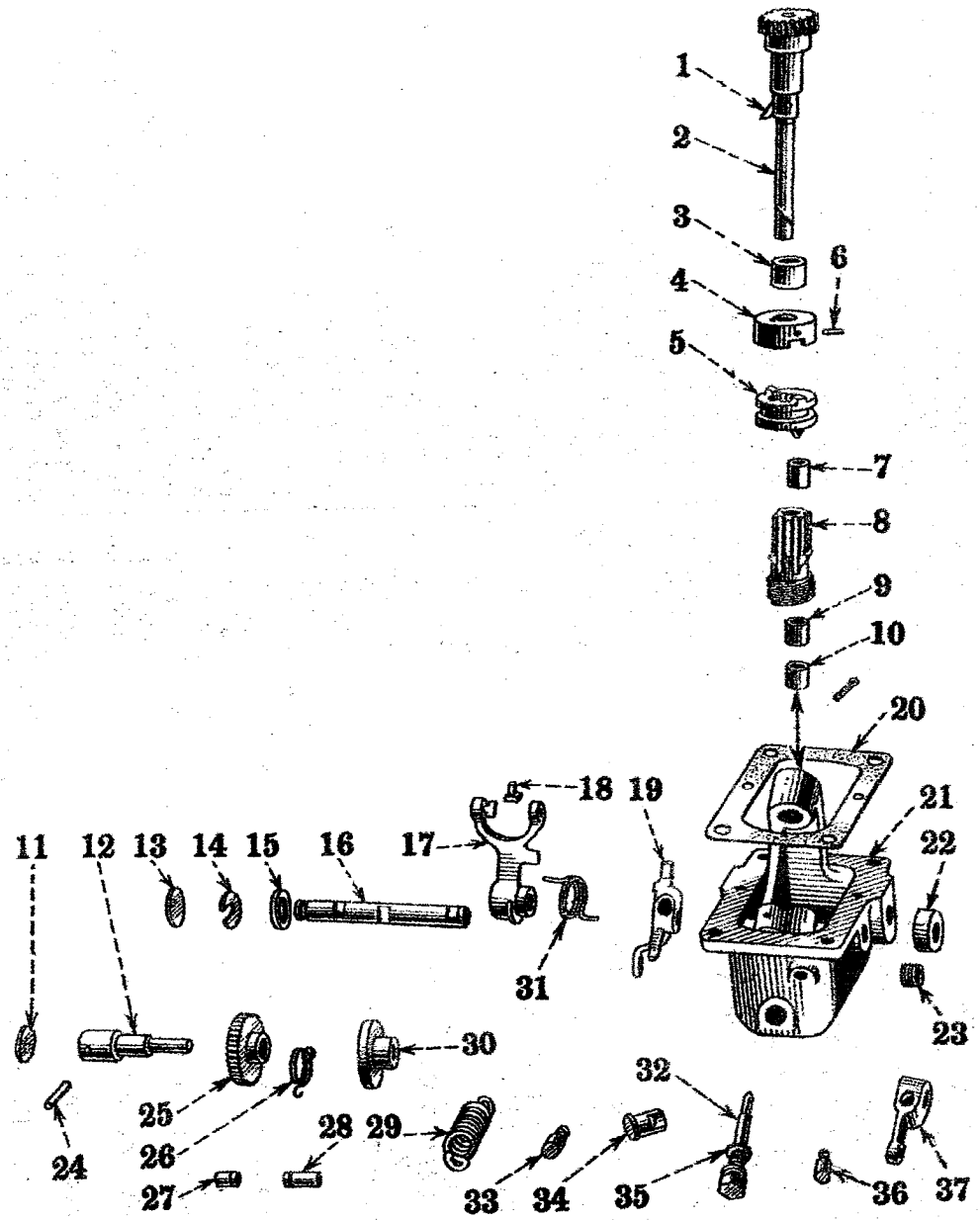

Unnumbered parts in the illustrations are the same as corresponding parts shown with numbers.

Ref. No.	I H C Part No.	Description
1	39810 D	Cylinder head stud, long.
2	42717 D	Cylinder head stud, short.
3	39758 DX	Breather pipe.
...	.....	Capscrew, 3/8" N.C. x 1-1/4".
...	.....	Lockwasher, 3/8".
4	42707 DX	Rear engine support, complete.
5	42708 D	Timing indicator.
...	.....	Flat head rivet, 3/16" x 3/4".
6	42718 DA	Rear engine support stud.
...	.....	Slotted hex. nut, 5/8" N.F.
...	.....	Cotter, 1/8" x 1".
7	25086 DA	Dowel pin.
9	39763 D	Plate, rear.
...	.....	Capscrew, 3/8" N.C. x 7/8".
...	.....	Lockwasher, 3/8".
10	25063 DA	Timing mark cover.
...	.....	Capscrew, 5/16" N.F. x 5/8".
...	.....	Lockwasher, 5/16".
11	42713 D	Dust seal.
...	.....	Capscrew, 3/8" N.F. x 5/8".
...	.....	Capscrew, 3/8" N.C. x 1".
...	.....	Lockwasher, 3/8".
12	42714 D	Dust seal gasket.
13	25121 D	Gasket.
14	39764 D	Gasket.
15	.....	Plug, 3/4".
16	48262 D	Oil level gauge sleeve.
17	49387 D	Washer.
18	13001 D	Plug, 1-5/8".
19	46351 D	Oil filter return pipe.
20	31729 D	Drain cock.
21	.....	Drain cock elbow, 3/8".
22	.....	Plug, 1".
23	6542 DX	Crankcase, complete.
24	39756 D	Side plate.
...	.....	Capscrew, 3/8" N.C. x 1".
25	39757 D	Gasket.
26	32371 D	Front cover gasket.
27	25138 DAX	Idler gear shaft with pin.
	38814 DX	Idler gear shaft with pin (.015" O.S.)
28	32367 DAX	Front plate.
...	.....	Capscrew, 1/2" N.C. x 1".
29	25140 DAX	Idler gear with bushing (64 teeth).
30	25131 D	Thrust washer.
...	.....	Capscrew, 5/16" N.F. x 3/4".
31	25130 D	Capscrew lock.
32	3713 DA	Oil filler cap.
33	28940 D	Stud.
34	.....	Hex. nut, 3/8" N.C.
35	1242 DB	Strainer.
36	5976 DX	Front cover, complete.
...	.....	Capscrew, 1/2" N.C. x 1-3/4".
...	.....	Lockwasher, 1/2".
37	30624 D	Starting crank ratchet pin.
38	42709 DX	Front engine support.
...	.....	Pipe nipple, 1/8" x 2".
...	.....	Pipe coupling, 1/8".
39	40875 DAX	Starting crank.
40	.....	Nut, 3/4" N.F.
41	25132 D	Nut lock.
42	25087 D	Dowel.
43	39762 D	Gasket.
44	39761 D	Plate.
...	.....	Capscrew, 3/8" N.C. x 7/8".
...	.....	Lockwasher, 3/8".
45	32370 D	Screw lock.
46	39380 D	Screw strip.
48	32368 DA	Front plate gasket.
49	36796 D	Oil flinger.
50	25954 D	Oil pan stud.
51	36798 D	Felt.
52	36799 D	Retainer.
53	Q 3615	Lubricator.
...	13062 D	Water jacket plug, 1-1/2".
...	18938 DA	Rear engine support dowel pin, 2-1/8" long.
...	29764 D	Idler gear shaft dowel pin.
...	30397 D	Oil header plug, 1/2".
...	32306 D	Distributor hole ring.
...	36797 D	Oil flinger trough.
...	38028 DM	Metering plug, 1/8" (slotted).
...	45976 D	Front engine support shim (.0299").
...	45977 D	Front engine support shim (.0149").
...	50410 DA	Oil header plug, 1/8".
...	50474 DA	Oil header plug, 1/4".
...	21826 H	Crankcase camshaft bearing plug, 2-1/4".

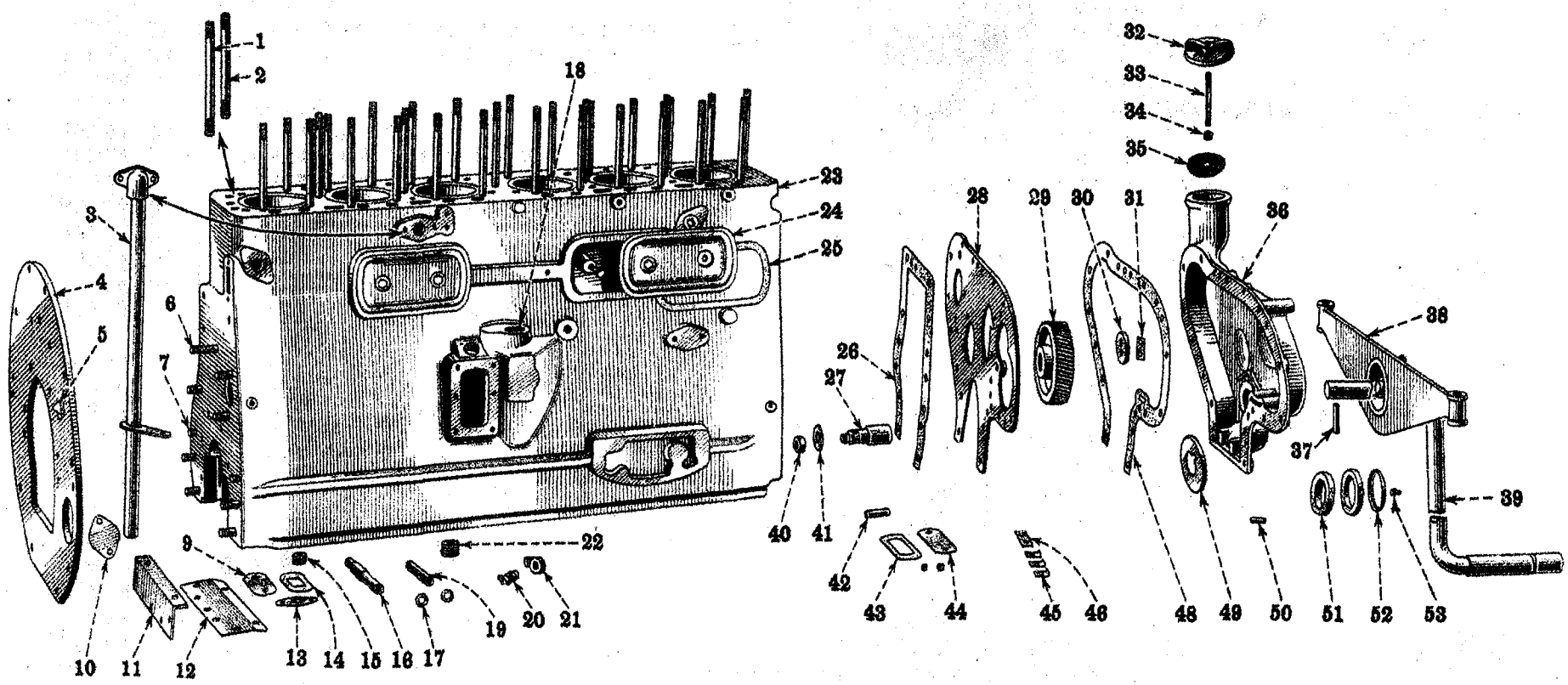

Unnumbered parts in the illustrations are the same as corresponding parts shown with numbers.

Ref. No.	I H C Part No.	Description
...	42695 D	Cylinder sleeve and piston complete.
...	42696 D	Set of 6 cylinder sleeves and pistons, complete.
1	24943 D	Bolt lock.
2	5958 DAX	Flywheel with ring gear.
3	31208 H	Flywheel ring gear (158 teeth).
4	39401 D	Oil seal retainer.
...	.....	Capscrew, 3/8" N.C. x 3-1/2".
...	.....	Washer, 13/32" I.D. x 3/4" O.D.
...	.....	Capscrew, 3/8" N.C. x 1-3/8".
...	.....	Lockwasher, 3/8".
5	32307 D	Oil seal felt.
6	32308 D	Retainer gasket.
7	31458 D	Piston ring - compression (plain).
8	42694 D	Piston ring - compression (taper face).
9	42219 D	Piston ring - oil regulating.
10	5957 DX	Piston with pin.
	5957 DY	Piston with pin and rings.
11	26916 D	Retainer ring.
12	26915 D	Piston pin (standard).
	53612 D	Piston pin (.005" oversize).
13	32942 D	Connecting rod bushing.
14	28737 DX	Bolt with nut.
...	.....	Cotter, 3/32 x 1".
15	28738 D	Nut.
16	42687 DX	Rod, complete with bushing.
	42687 DY	Rod, complete with bushing and bearing.
17	42688 DAX	Rod bearing, complete.
	42690 DAX	Rod bearing, complete (.030" undersize).
19	43113 D	Stud.
...	.....	Cotter, 1/8" x 1-3/8".

Ref. No.	I H C Part No.	Description
20	25134 DA	Gear (27 teeth).
21	PO 9696	Key.
22	3202 DBRX	Sleeve with ring.
23	4222 D	Ring.
24	32333 D	Bolt, 5/8".
25	32332 D	Dowel pin.
26	32310 DX	Plate with studs.
...	.....	Capscrew, 3/8" N.C. x 1".
...	.....	Lockwasher, 3/8".
27	32311 D	Plate stud.
28	25093 D	Felt plug.
29	25076 D	Dowel.
30	32288 DAX	Crankshaft with nut.
	32305 DAX	Crankshaft with nut (.030" undersize).
31	32307 D	Oil seal felt.
32	32309 D	Oil seal gasket.
33	32312 D	Plate gasket.
34	47756 DX	Front bearing, cp. (standard.
	47760 DX	Front bearing, complete (.030" undersize).
	47759 DX	Rear bearing, complete.
	47763 DX	Rear bearing, complete (.030" undersize).
35	47757 DX	Intermediate bearing, complete.
	47761 DX	Intermediate bearing, cp. (.030" undersize).
36	47758 DX	Center bearing, complete.
	47762 DX	Center bearing, cp. (.030" undersize).
37	47757 DX	Intermediate bearing, complete.
	47761 DX	Intermediate bearing, cp. (.030" undersize).
38	39422 D	Washer.
39	39423 D	Stud nut.

When ordering, always use I H C Part Nos.

Ref. No.	I H C Part No.	Description
	42695 D	Cylinder sleeve and piston complete.
	42696 D	Set of 6 cylinder sleeves and pistons, complete.
	24943 D	Bolt lock.
2	5958 DAX	Flywheel with ring gear.
5	31208 H	Flywheel ring gear (158 teeth).
4	39401 D	Oil seal retainer.
.	.....	Capscrew, 3/8" N.C. x 3-1/2".
.	.....	Washer, 13/32" I.D. x 3/4" O.D.
.	.....	Capscrew, 3/8" N.C. x 1-3/8".
.	.....	Lockwasher, 3/8".
5	32307 D	Oil seal felt.
6	32308 D	Retainer gasket.
7	31458 D	Piston ring - compression (plain).
8	42694 D	Piston ring - compression (taper face).
9	42219 D	Piston ring - oil regulating.
0	5957 DX	Piston with pin.
	5957 DY	Piston with pin and rings.
1	26916 D	Retainer ring.
2	26915 D	Piston pin (standard).
	53612 D	Piston pin (.005" oversize).
3	32942 D	Connecting rod bushing.
4	28737 DX	Bolt with nut.
.	.....	Cotter, 3/32 x 1".
5	28738 D	Nut.
6	42687 DX	Rod, complete with bushing.
	42687 DY	Rod, complete with bushing and bearing.
7	42688 DAX	Rod bearing, complete.
	42690 DAX	Rod bearing, complete (.030" undersize).
9	43113 D	Stud.
.	.....	Cotter, 1/8" x 1-3/8".
20	25134 DA	Gear (27 teeth).
21	PO 9696	Key.
22	3202 DBRX	Sleeve with ring.
23	4222 D	Ring.
24	32333 D	Bolt, 5/8".
25	32332 D	Dowel pin.
26	32310 DX	Plate with studs.
...	.....	Capscrew, 3/8" N.C. x 1".
...	.....	Lockwasher, 3/8".
27	32311 D	Plate stud.
28	25093 D	Felt plug.
29	25076 D	Dowel.
30	32288 DAX	Crankshaft with nut.
	32305 DAX	Crankshaft with nut (.030" undersize).
31	32307 D	Oil seal felt.
32	32309 D	Oil seal gasket.
33	32312 D	Plate gasket.
34	47756 DX	Front bearing, cp. (standard.
	47760 DX	Front bearing, complete (.030" undersize).
	47759 DX	Rear bearing, complete.
	47763 DX	Rear bearing, complete (.030" undersize).
35	47757 DX	Intermediate bearing, complete.
	47761 DX	Intermediate bearing, cp. (.030" undersize).
36	47758 DX	Center bearing, complete.
	47762 DX	Center bearing, cp. (.030" undersize).
37	47757 DX	Intermediate bearing, complete.
	47761 DX	Intermediate bearing, cp. (.030" undersize).
38	39422 D	Washer.
39	39423 D	Stud nut.

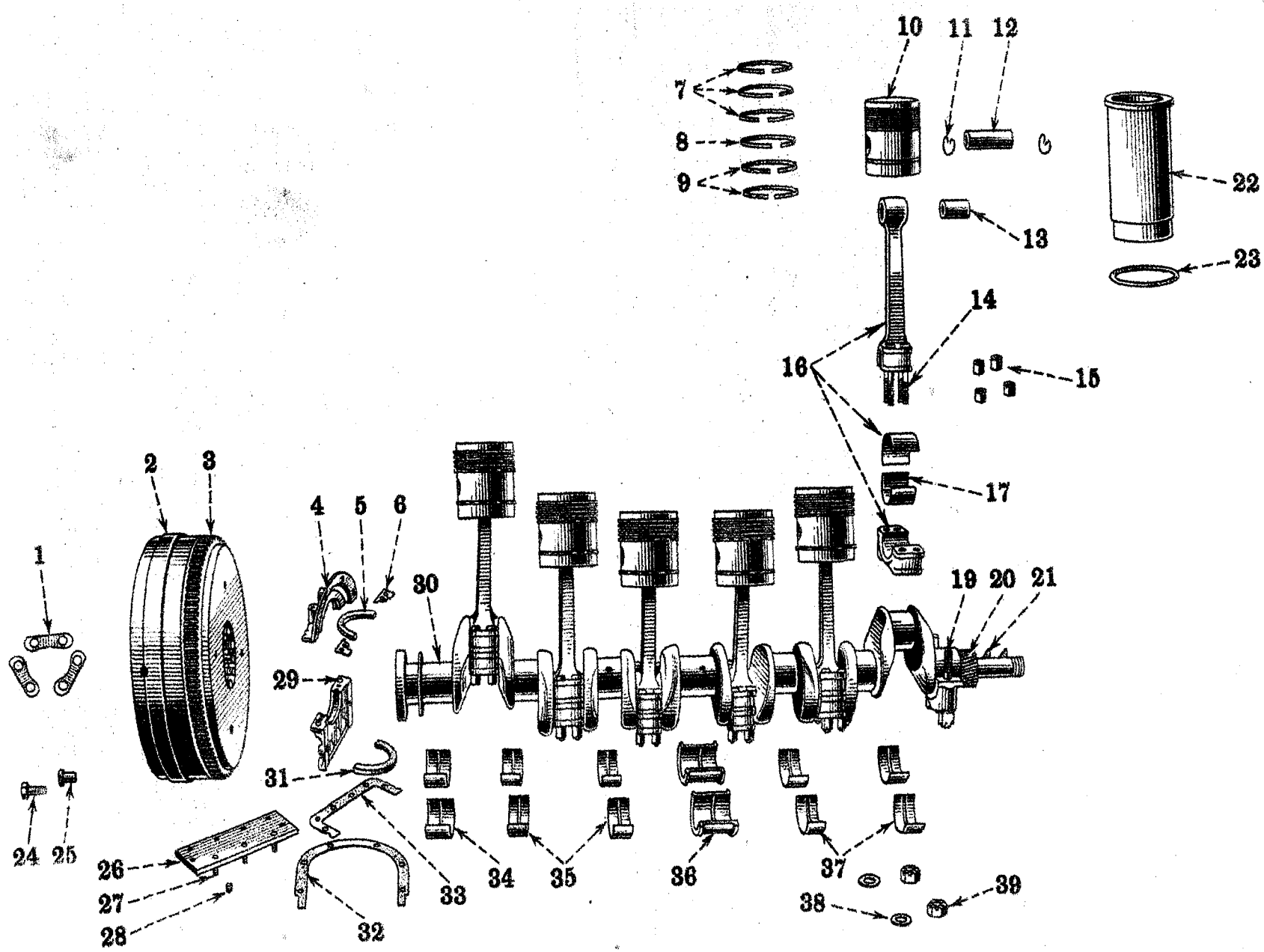

Unnumbered parts in the illustrations are the same as corresponding parts shown with numbers.

When ordering, always use I H C Part Nos.

Ref. No.	I H C Part No.	Description
1	38763 H	Nut.
2	10951 D	Adjusting screw.
3	24961 D	Valve lever spring.
4	32468 DX	Valve lever, right hand.
5	24965 DA	Bushing.
6	32467 DX	Valve lever, left hand.
7	24962 D	Spacer, outer.
8	27141 D	Retainer ring.
9	13083 D	Shaft plug.
10	32466 DX	Valver lever, straight.
11	32468 DX	Valve lever, right hand.
12	32463 D	Front center bracket stud.
13	5020 DB	Cover.
...	.....	Hex. nut, 1/2" N.F.
14	32459 D	Washer.
15	32458 D	Gasket.
16	32462 D	Felt.
17	5027 DA	End bracket.
18	24961 D	Valve lever spring.
19	24964 D	Spacer, intermediate.
20	5972 DX	Cross shaft bracket.
21	5028 D	Bracket, intermediate.
22	32465 D	Spacer, center.
23	32464 D	Shaft, center.
24	5029 DX	Front center bracket.
...	.....	Capscrew, 3/8" N.C. x 3".
...	.....	Cup point headless set screw, 5/16" N.C. x 3/4".
...	.....	Hex. jam nut, 5/16" N.C.
25	27140 DBX	Shaft (front and rear).
26	5970 DX	Housing.
27	32457 D	Housing gasket.
28	32447 D	Front bracket stud.
...	.....	Hex. nut, 1/2" N.F.
29	5973 D	Water manifold.
...	.....	Capscrew, 3/8" N.C. x 2".
...	.....	Capscrew, 3/8" N.C. x 3".
...	.....	Lockwasher, 3/8".
30	42762 D	Gasket.
31	54158 D	Nozzle body stud.
32	32447 D	Front bracket stud.
33	5968 DX	Cylinder head, rear, complete, less valves.
	5968 DY	Cylinder head, rear, complete, with valves.
...	.....	Pipe plug, 1/2" ctsk. type.
34	13000 D	Expansion plug, 1-1/8".
35	.....	Plug, 1/2".
36	31536 D	Spark plug (Champion No. 44) (optional).
	32713 D	Spark plug (AC No. 18) (optional).
37	32448 D	Bracket stud, intermediate.
38	32445 D	Valve lever bracket stud.
...	.....	Hex. nut, 3/8" N.F.
39	32444 D	Valve housing stud.
...	.....	Hex. nut, 3/8" N.F.
40	32448 D	Bracket stud, intermediate.
...	.....	Hex. nut, 1/2" N.F.
41	5967 DY	Cylinder head, front, complete with valves.
	5967 DX	Cylinder head, front, complete less valves.
42	32445 D	Valve lever bracket stud.
43	54158 D	Nozzle body stud.
44	32448 D	Bracket stud, intermediate.
45	.....	*See detail illustration.*
46	32445 D	Valve lever bracket stud.
47	32454 D	Stud nut.
48	42763 D	Gasket, front and rear.
49	32455 D	Center stud washer.
50	32283 D	Bearing, rear.
51	32282 D	Bearing, No. 3.
52	32281 D	Bearing, No. 2.
53	32280 DA	Bearing, front.
54	13055 D	Key.
55	25090 DD	Gasket ring.
56	32279 DB	Camshaft.
57	5960 D	Plate.
...	.....	Capscrew, 1/2" N.C. x 1-1/4".
...	.....	Lockwasher, 1/2".
58	32284 DA	Gear (54 teeth).
59	25323 D	Nut lock.
60	.....	Hex. jam nut, 1" N.F.
61	32485 D	Valve spring collar key.
62	32486 DX	Push rod.
63	42748 D	Upper seat.
64	18539 D	Retainer.
65	32483 DA	Valve spring.
66	18746 DA	Lower seat.
67	5025 DB	Valve guide.
68	4988 D	Guide.
69	32482 DB	Exhaust valve.
	42747 D	Intake valve.
70	25043 DA	Valve tappet.
...	13083 D	Expansion plug, 3/4".
...	31121 D	Nozzle body stud nut.
...	50410 DA	Oil header plug.
...	23007 V	Expansion plug, 1".

CYLINDER HEAD, VALVE, ETC.

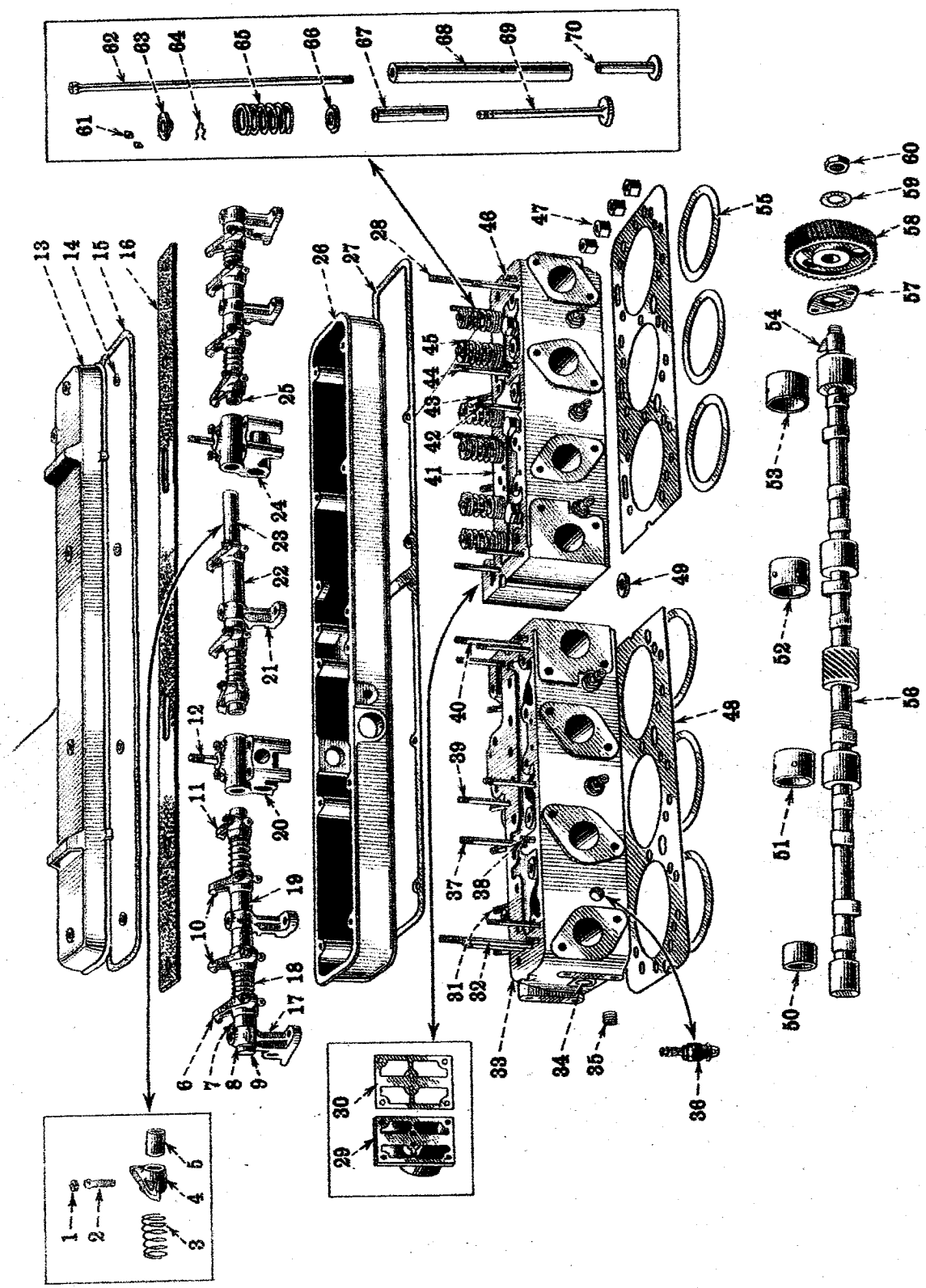

Unnumbered parts in the illustrations are the same as corresponding parts shown with numbers.

When ordering, always use I H C Part Nos.

Ref. No.	I H C Part No.	Description
...	42615 DB	Radiator, complete.
1	42610 D	Handle } 42611 D - Cap, complete.
2	5913 D	Cover } 42611 D - Cap, complete.
3	10429 D	Gasket } 42611 D - Cap, complete.
4	42158 D	Clamp.
...	.....	Brass cotter, 5/32" x 3/4".
5	5940 DA	Water tank, upper.
6	42537 D	Gasket.
7	42599 D	Core stiffener, upper, rear.
...	.....	Capscrew, 3/8" N.C. x 1-1/4".
...	.....	Lockwasher, 3/8".
8	42534 D	Core stiffener, front.
9	42538 D	Core, complete.
...	42589 D	Radiator repair tube.
10	5945 D	Core spacer, R.H.
...	.....	Capscrew, 1/2" N.C. x 1-3/4".
...	.....	Lockwasher, 1/2".
11	52531 D	Grille, complete.
...	.....	Capscrew, 3/8" N.C. x 3/4".
...	.....	Lockwasher, 3/8".
...	.....	Washer, 13/32" I.D. x 7/8" O.D
12	42536 D	Elbow gasket.
13	5942 D	Inlet elbow.
...	.....	Capscrew, 3/8" N.C. x 1-1/4".
...	.....	Lockwasher, 3/8".
14	42613 D	Inlet hose clamp.
15	42612 D	Inlet hose.
16	5944 D	Core spacer, L.H.
...	.....	Capscrew, 1/2" N.C. x 1-3/4".
...	.....	Lockwasher, 1/2".
17	42601 DAX	Overflow pipe, complete.
18	42544 DA	Sheet, L.H.
	42545 DA	Sheet, R.H.
...	.....	Capscrew, 3/8" N.C. x 1/2".
...	.....	Lockwasher, 3/8".
19	42537 D	Gasket.
20	42534 D	Core stiffener, front.
21	42600 D	Core stiffener, lower, rear.
...	.....	Capscrew, 3/8" N.C. x 1-1/4".
...	.....	Lockwasher, 3/8".
22	32181 D	Outlet elbow gasket.
23	42914 D	Pipe clip.
...	.....	Capscrew, 3/8" N.C. x 3/4".
...	.....	Lockwasher, 3/8".
24	46677 D	Outlet pipe.
25	42614 D	Outlet hose.
26	29976 D	Outlet hose clamp.
27	43144 D	Name plate.
...	.....	Oval head machine screw, No. 8 - 32 x 3/8".
28	42605 D	Drain cock.
29	6442 D	Outlet flange.
...	.....	Capscrew, 1/2" x 1-1/2" N.C.
...	.....	Lockwasher, 1/2".
30	5941 DB	Water tank, lower.
31	52033 D	Overflow pipe gasket.

RADIATOR

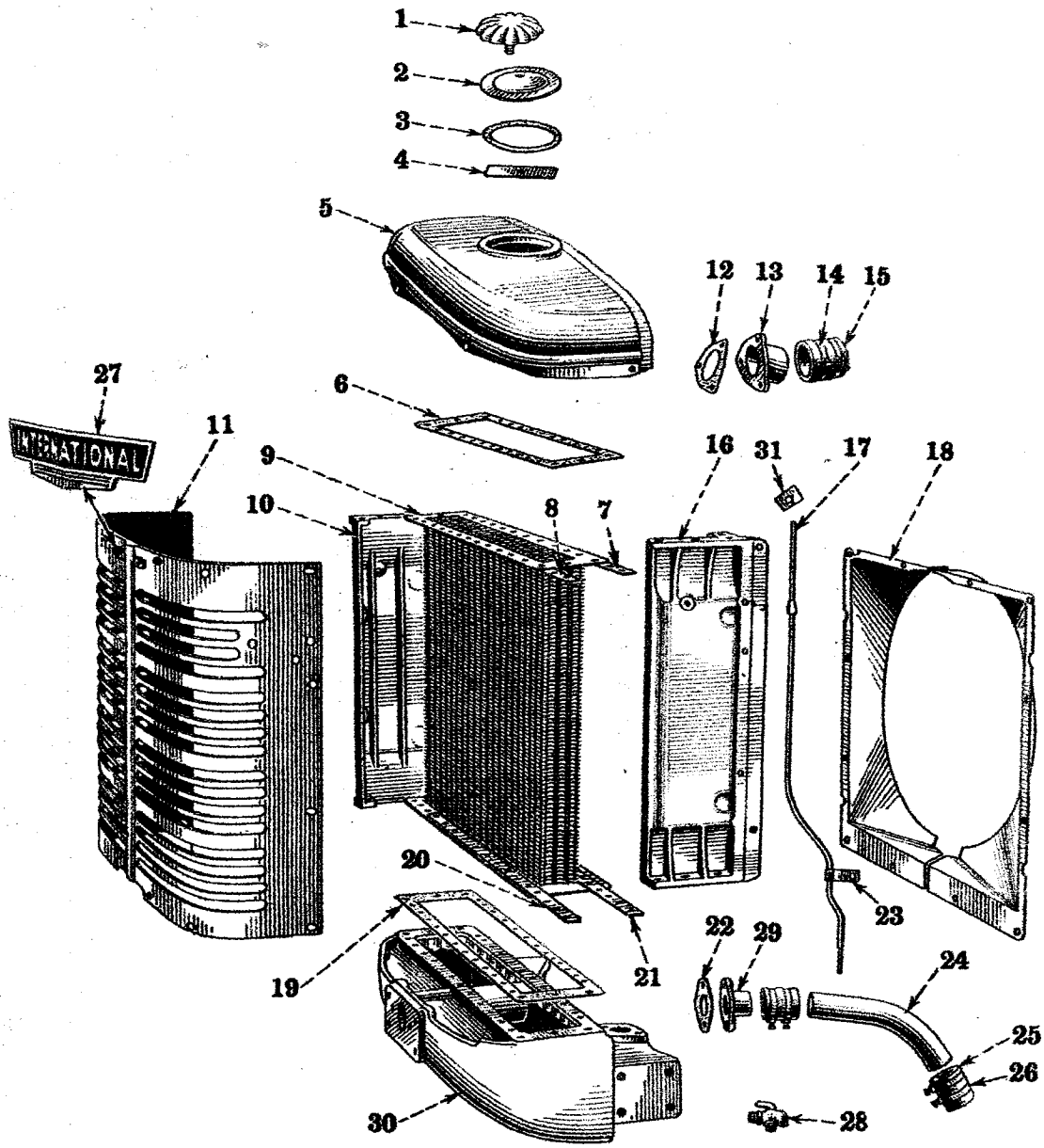

Unnumbered parts in the illustrations are the same as corresponding parts shown with numbers.

ILLUSTRATIONS AND PARTS LIST

The following pages contain parts list and illustrations of "exploded" views of the various units disassembled so that parts wanted may be readily located. Reference numbers only are shown in the illustrations and, to avoid errors and delays *when ordering parts, always use the regular "Part Number"* shown with the "Ref. No.". *Do not use reference numbers when ordering repair parts.*

Standard parts such as bolts, nuts, washers, etc., having no IHC Part Number, should be ordered by size.

INDEX TO UNITS

Description	Page No.	Description	Page No.
Air cleaner	63	Manifolds	58, 59
Automatic trip mechanism	54, 55	Miscellaneous	112
Batteries	79	Pistons	50, 51
Carburetor	72, 73	Piston rings	50, 51
Crankcase	52, 53	Radiator	46, 47
Crankshaft	50, 51	Seat	109
Cylinder head	48, 49	Side sheets	85
Dash	74, 75	Spark plug cables	78
Drawbar	107	Sprocket drive assembly	96 to 98
Drive bevel gear assembly	93	Starting crank	52, 53
Engine clutch and coupling	86, 87	Starting valve mechanism	67
Engine clutch controls	92	Steering brakes and controls	94, 95
Equalizer spring	105	Steering clutch	88, 89
Fan	60, 61	Steering clutch and engine clutch controls	92
Fenders	109	Tanks and pipings	70, 71
Front idler assembly	106	Thermostat	62
Fuel oil filter	68	Tools	112
Gasoline strainer	62	Track frame diagonal brace	104
Governor controls	67	Track frame and rollers	102, 103
Hood	85	Track frame guide	101
Injection pump connections	64, 65	Track idler assembly	100
Lincoln bucket lubricator	114 to 116	Track link pin and shoe assembly	108
Lincoln hand lubricator	113	Track roller assembly	99
Lubricating oil filter	68	Transmission	90, 91
Lubricating oil pump	56, 57	Valves	48, 49
Magneto	80 to 83	Water pump	60, 61
Magneto drive	84	Water trap	69
Main frame and covers	110, 111	Wiring	76, 77
Main frame side channels	101		

In the following lists:-

N.C. designates "National Coarse Thread".
N.F. designates "National Fine Thread"

Study the problem before making any changes.

If any adjustments are to be disturbed, the original setting should be noted, so this same setting may be restored in case the part changed does not remedy the trouble.

FAILURE TO START ON GASOLINE:

No gasoline in carburetor.
Gasoline supply cock closed.
Carburetor choked too much.
No spark from magneto.
Gears engaged (transmission).
Gasoline starting device not set.
Condensation on spark plugs.

MISSING AND BACKFIRING:

Water in gasoline.
Air leaks around intake manifold.
Starting valves not properly seated.

FAILURE TO CHANGE OVER TO HIGH COMPRESSION OPERATION:

Starting valve mechanism sticks.
Injection pump not primed (vent air).
Fuel oil supply cock closed at tank.
Speed control hand lever not set in proper position.
Fuel supply pump not developing fuel pressure.

LACK OF LUBRICATING OIL PRESSURE:

Insufficient amount of oil.
Dirt under pressure regulating valve.
Oil pump strainer clogged or pump not working.
Broken oil pressure indicator or pipe lines.

LACK OF POWER:

Injection pump air bound (vent air supply).
Insufficient fuel, filter clogged, supply pump not working properly.
Clutch slipping, exhaust pipe or air cleaner clogged or restricted.

(Also see "Lack of Compression" and "Overheating").

KNOCKING:

Loose piston pin, connecting rod, camshaft or crankshaft bearing.
Broken piston rings or loose pistons.
Combustion knock in one or two cylinders generally indicates leaky injection nozzle valve.
General rough running usually due to improper timing of injection.
Poor grade of fuel, or water in fuel.
Excessive carbon in cylinder.

LACK OF COMPRESSION:

Sticky, dirty, pitted or improperly adjusted valves.
Stuck, worn or broken piston rings.
Worn pistons or cylinder sleeves.
Leaky cylinder head gasket.
Leaky gasoline starting valve.

(Also see "Lack of Oil Pressure").

OVERHEATING:

Insufficient amount of water, fan belt slipping, excess load on engine.
Inside of radiator and cylinder block limed up or clogged with dirt.
Outside of radiator or radiator screen covered with dirt or chaff.
Lack of oil pressure, or water pump not working properly.
Water pump air bound.

ENGINE SMOKES:

Overloaded injection of fuel too early, lack of compression, poor grade of fuel oil, piston pumping lubricating oil.

EXCESSIVE LUBRICATING OIL CONSUMPTION:

Oil leaks, pistons pump oil, poor grade of lubricating oil being used, piston rings stuck in grooves.

NOTE: If the injection pump does not perform properly, notify the nearest Company Branch House at once.

STIFF TRACK

Where tracks show evidence of being stiff or tight, indicated by links in the track remaining kinked as they travel along the top section, they may often be made to work much more freely by being cleaned thoroughly with an application of kerosene or fuel oil. The use of lubricant is not ordinarily recommended for tracks, except for temporarily freeing them after they have become tight between the pins and bushings.

REMOVING TRACK

Should track be removed, when replacing, the end with bushing (A) must be toward front of TracTracTor, *as shown in Illustrations Nos. 35 and 36.* Bushing must be in place when connecting track links.

NOTE: When installing track, the end with bushing "A" must be toward front of TracTracTor when track is laid out flat on ground as shown below. These instructions must be carefully observed or unnecessary wear in track will result.

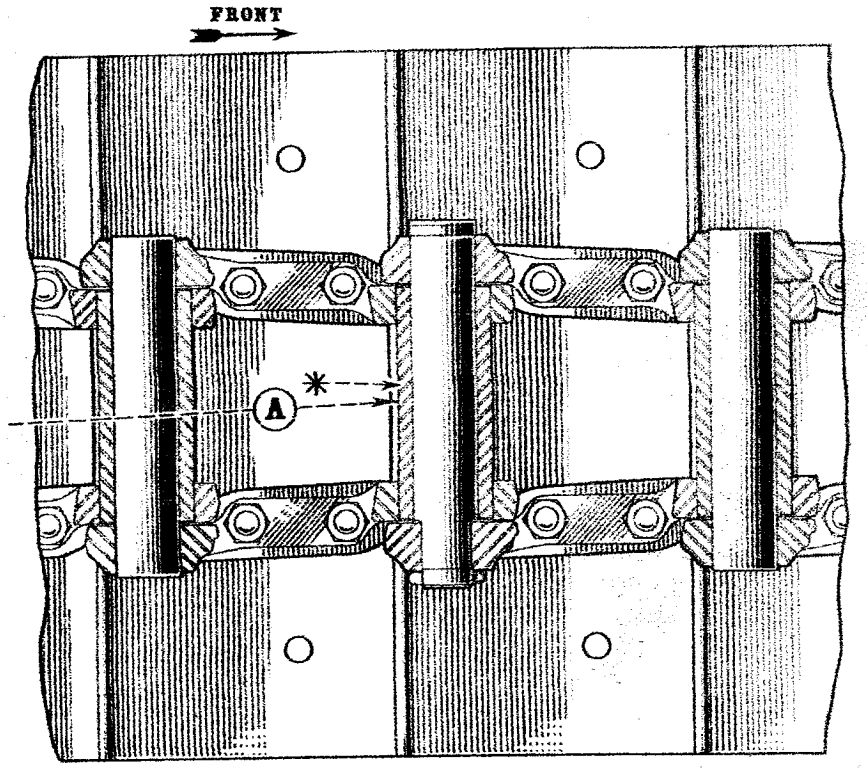

Illustration No. 35

Track Link Master Pin Assembly

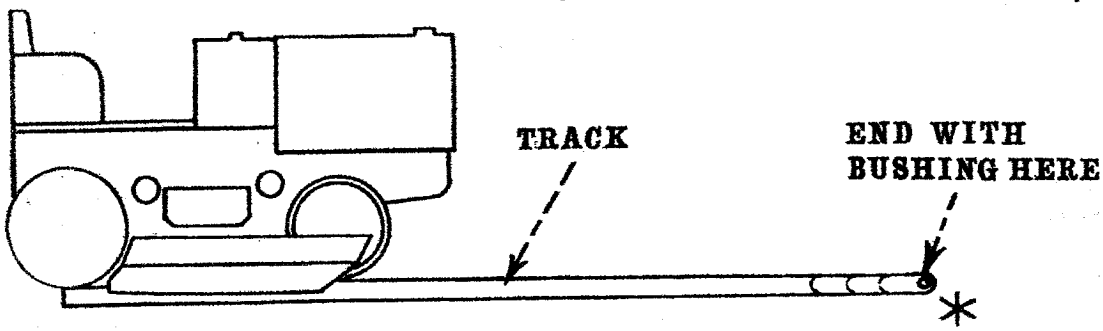

Illustration No. 36

TRACK ROLLER LUBRICATION

It is important that track rollers have proper lubrication. *(See "Lubrication Chart" for further information).*

TRACK ASSEMBLIES

When backing TracTracTor, the track chain if too loose, may have a tendency to climb the sprocket.

When track adjustment is either too tight or too loose, it causes undue wear on track links, pins, bushings and bearings, also front idler bearings.

The track chain spring when properly adjusted, takes care of the play in the track chain so that there is no looseness or tension on track when in normal operating position.

TRACK ADJUSTMENT

In order to obtain correct adjustment of track chain, the chain must be tight everywhere except on the top between the front idler and sprocket. This can be accomplished by placing a wooden block approximately one foot in height under the foremost track shoe lug; then, with engine running, put TracTracTor in low gear and engage clutch just enough so that the sprocket drive tightens the chain along the ground and around the sprocket. After locking brake and stopping engine, stand on top of track chain. This weight will pull the chain tight around the front idler. All slack should now be in top part of track chain.

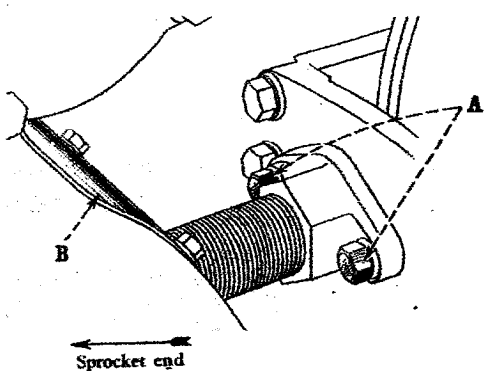

Illustration No. 33

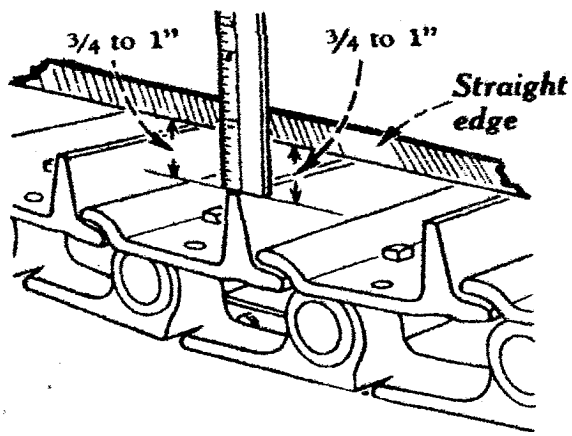

Illustration No. 34

TO ADJUST - *(See Illustration No. 33).*

If adjustment is necessary, remove the small cover plate "B" at the front of the equalizer spring housing and loosen the track spring adjuster lock bolt just inside the housing. Remove the two capscrews "A" at the front of the track spring adjuster. Turn the adjuster clockwise, as viewed from rear (sprocket end). This pushes front idler forward, tightening track chain. Turn counter-clockwise to loosen track chain.

PROPER ADJUSTMENT OF TRACK IS MEASURED AS FOLLOWS:

Using a string or other straight edge, align the tips of the track shoe cleats across each of the three spans between the top idlers and sprocket and front idler. The sag of the chain under the straight edge of each span should be approximately 3/4" to 1". *(See Illustration No. 34).*

After this adjustment has been obtained, replace cap screws "A", tighten lock bolt and replace cover plate "B".

After track chain has been thoroughly broken in it is well to check clearance again.

STEERING BRAKES

The steering brakes are 17" external contacting bands on steering clutch drums.

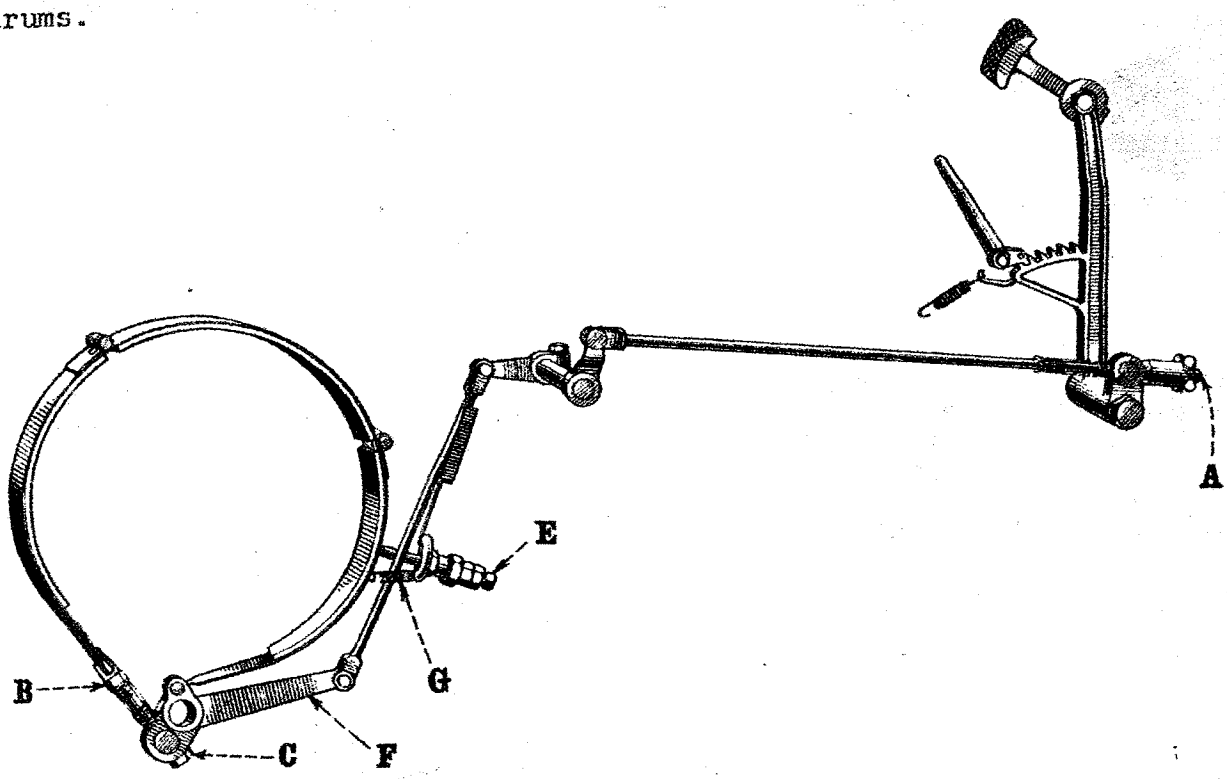

Illustration No. 31

ADJUSTMENT - *(See Illustrations Nos. 31 and 32)*

Steering brake pedals should have approximately 3" free movement, measured at pedal pad. If free movement becomes less than 3", adjustment is necessary.

The adjustment for wear is made by turning the brake rod adjusting knobs "A" on each side under the dash and just above the engine frame side channels, clockwise until desired pedal travel is obtained.

When adjustment can no longer be made with knobs, turn them counter-clockwise until about 1" of threads are covered. Then remove brake inspection cover under the rear section of the main frame on each side of tractor. Adjust brake band set screw "E" to give 1/64" clearance between steering clutch drum and lining at that point. Lock set screw. Loosen jam nut "B" and turn steering brake band adjusting bolt "C" until 1/64" clearance is obtained between steering clutch drum and brake lining at all points. Lock jam nut "B", replace covers and adjust knob "A" to give 3" free pedal movement.

Subsequent intermediate adjustments can be made with adjustment knobs "A".

BRAKE LINING RENEWAL - *(See Illustration No. 32)*

Release tension on adjusting knob "A". Remove covers from bottom and rear of main frame. Remove set screw from brake band pivot shaft and slide shaft far enough into main frame so as to remove it from pivot arm "F". Back up adjusting set screw "E". Unhook spring "G" from brake band. Remove brake band adjusting bolt "C" and pull brake band from above drum. Reline bands, replace by reversing the above procedure, and adjust as described above.

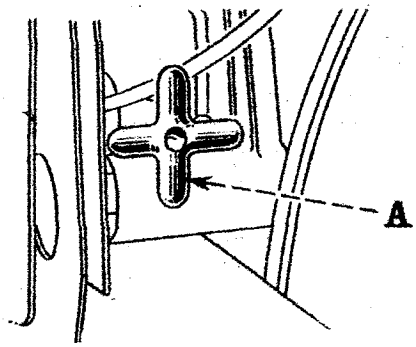

Illustration No. 32

STEERING CLUTCHES

If steering clutch slips, or steering clutch hand lever free movement is reduced below 2", measured at the handle of the lever, then adjustment is necessary.

TO ADJUST

Remove release lever return spring from release lever, and remove operating rod yoke pin, loosen yoke lock nut and turn yoke out (lengthening rod linkage); then tighten lock nut against yoke and replace yoke pin.

Check to see if free movement of hand lever is 4".

When adjustment can no longer be made by means of lengthening operating rod, remove operating rod yoke pin; then remove steering clutch release lever cap screw. Pry release lever off splined release shaft and turn right hand release lever clockwise (left hand release lever counter-clockwise) slightly, and replace lever on splined release shaft. Then loosen lock nut and shorten operating rod until free movement of 4" is obtained.

When desired free movement of hand lever is obtained, replace release lever cap screw and tighten.

Subsequent intermediate adjustments can be made by means of lengthening rod linkage as described above.

STEERING CLUTCH COMPARTMENT AND CLUTCH HOUSING DRAINS

Every 60 hours of operation, remove drain plugs to drain clutch compartments of any excess lubricant which may have collected there. Replace plugs.

NOTE: When operating in water, under very wet conditions, or under extreme dust conditions, where water or dust is apt to come in through holes in drain plugs on engine clutch compartment and steering clutch compartment, these plugs should be removed and replaced with solid plugs which have no holes. Occasionally remove plugs to allow any oil accumulation to drain out.

TRANSMISSION AND SPROCKET DRIVE GEAR CASES

The transmission requires little attention other than maintaining proper oil levels.

Once a season remove transmission oil drain plug, also sprocket drive gear case drain plugs, *shown on "Lubrication Chart". Drain when oil is warm.* Allow time to drain and replace plugs. Then refill to proper level with approved lubricant.

TO WASH TRANSMISSION

Fill transmission case and sprocket drive gear cases to proper level with kerosene. Operate TracTracTor in low gear for a few minutes.

Remove drain plugs, allow time for complete drainage of kerosene, then replace plugs and fill to proper levels with fresh lubricant. *See "Lubrication Chart".*

REPLACEMENTS - MAIN FRAME PARTS

When replacements of parts in the main frame are made, the old oil should be thoroughly washed out to remove all sediment, etc., and then refilled with new oil. It is important that this be done as foreign matter, such as very fine dirt, etc., cannot be separated from the old oil be settling.

SPROCKET DRIVE OIL SEAL DIAPHRAGMS

At least once a season, and more often when operating in rice fields or under very wet or muddy conditions, sprocket drive oil seal diaphragms should be taken out and cleaned, and any dirt that has accumulated around the diaphragms removed.

It is advisable at this time to dip the leather diaphragms in oil.

If diaphragms after continued use are not in good condition, they should be replaced.

Do not keep leather diaphragms exposed to weather after cleaning

SETTING FOR BEVEL GEAR DEFLECTION SET SCREWS

Screw in snug (by hand) against highest point of gear (turn gear to determine this high point) and back off 1/4 turn. If feeler gauges are used, .020" is the desired clearance between set screw and high point of gear. Then tighten lock nut.

CARE OF THE CLUTCH

The over-center clutch is so designed that it requires a minimum of attention. It is important, however, that instructions for lubricating, as given on "Lubrication Chart" are followed.

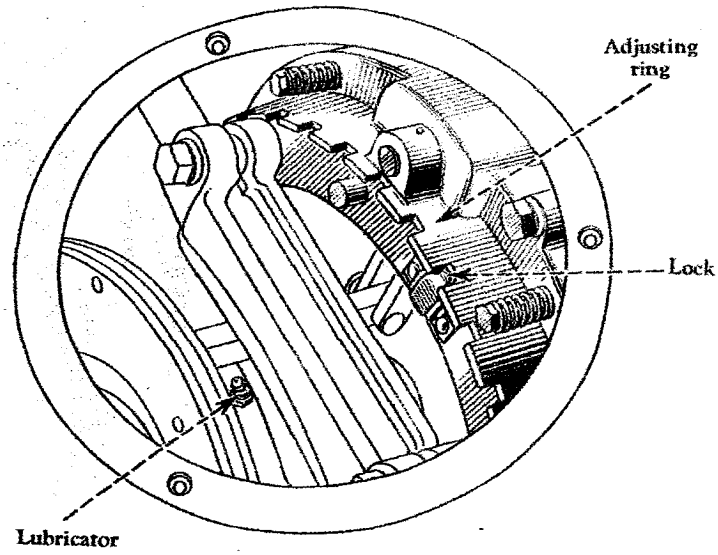

Illustration No. 30
Adjustment features of the 17" over-center clutch.

OPERATION AND ADJUSTMENT

1. Clutch is fully engaged when the engine clutch hand lever is pulled back all the way so that full over-center cam engagement is definitely felt.

2. The clutch needs adjusting only when any noticeable slippage is taking place with TracTracTor operating under load.

3. To adjust, remove clutch inspection cover on the floor plate ahead of the steering clutch levers.

4. Release adjusting ring lock.

5. With clutch hand lever in disengaged position, turn the adjusting ring in a clockwise direction, moving it one notch, or possibly two notches at the most at any one time. Pull hand lever back as a check to determine if over-center engagement is felt.

If adjustment has been made as described above, and the cams are so tight that you do not get full over-center engagement, then the adjusting ring should be backed off one notch (in counter-clockwise direction).

For satisfactory operation of the clutch, do not have the clutch adjuste so tight that this full over-center engagement is not easily secured.

6. When correct clutch adjustment is reached, be sure to engage the adjusting ring lock in notch on the adjusting ring and replace cover plate.

The correct adjustment has been made when a considerable (not excessive) pressure is felt when pulling clutch hand operating lever back so that a definite over-center cam engagement is felt.

If little or no pressure is needed on end of hand lever to engage the clutch, then further adjustment, as outlined above, is necessary.

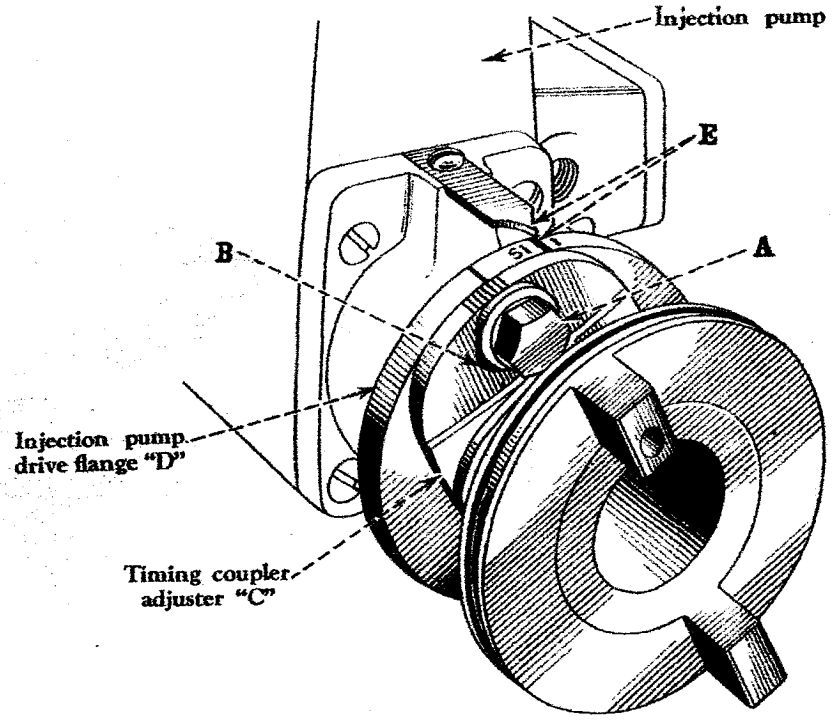

Illustration No. 29

The injection pump drive has a timing adjustment between drive flange and timing coupling adjuster. The adjustment is normally set with cap screws "A" at center of slot "B" and mark on drive flange "D" at center mark of graduations on timing coupling adjuster "C".

In order to be sure of the best operating condition, which may vary on account of local conditions, the adjustment indicator can be tried on either side of center mark "C" and set at the best operating position.

The best location is where engine speed is maximum for a fixed load and engine operation smooth with cleanest exhaust.

To change location of indicator, loosen cap screws "A" on indicator and turn injection pump to desired position, then tighten cap screws "A".

For advanced position, turn pump flange "D" clockwise. For retarded position, turn counter-clockwise.

Timing couplings are so made that they can be assembled only one way for correct timing of pump with relation to crankshaft.

The injection pump is timed for port closing of No. 1 unit.
With engine turned over so that No. 1 piston is on the compression stroke and just before upper dead center, "S.I." mark on flywheel will register with timing indicator on right side of rear engine support. In this position "S.I." mark on injection pump drive flange "D" (at front end of pump) will register with "S.I." indicator mark "E" on front end of pump housing with adjustments in normal position.

NOTE: If front gear cover is off, the letters on gear faces will not register in the above position.

INJECTION NOZZLE

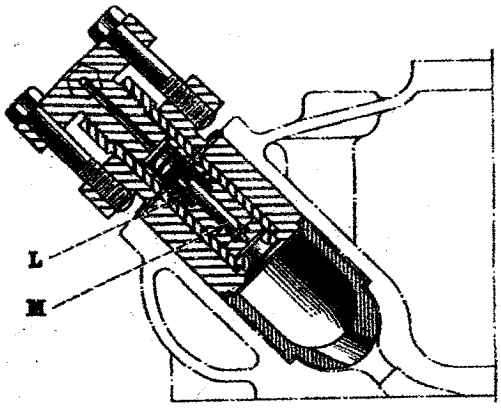

Illustration No. 28
Injection Nozzle
(sectional view)

If any cylinder seems to fire too noisy, it usually is an indication that the injection nozzle valve "M" is leaking badly. Clean nozzle and fitting thoroughly with clean fuel oil. Remove nozzle and disassemble. A leaky valve will generally appear black. Clean the valve and seat, and wash in clean fuel oil. *(See Illustration No. 28).*

Before injection nozzle valve is disassembled, it is advisable to check the length of each valve spring "L" so that each spring can be reassembled to the original working position.

The pressure of these springs, when assembled correctly, should be 34 to 35 pounds.

The nozzle plate should be free of carbon. There should be no carbon in nozzle body spacer.

CYLINDER HEAD GASKET

In replacing cylinder head, it is necessary to insure against leaks by re-tightening the stud nuts 2 or 3 times after engine has been run and water jacket becomes thoroughly heated. To tighten nuts properly, the valve rocker shaft assembly must be raised.

For most satisfactory results in tightening cylinder head after installing cylinder head gasket, tighten down all nuts fairly snug, starting with the row on the center line, then going to the others. Re-tighten in the same order, giving each nut a small part of a turn at a time. Continue this until all nuts are tight. Do not screw one nut down perfectly tight, and then go to the next, as you will not secure an even pressure on the gasket in this manner.

CAUTION: Be sure to adjust valve tappet clearance after the last tightening of cylinder head stud nuts *(See "Valve Adjustment")*.

REMOVING CYLINDER HEAD OR VALVES

Whenever cylinder head or valve mechanism has been removed, care must be taken when replacing same so that valves are not damaged by coming into contact with top of piston, or through improper adjustment of valve lever screw by being pushed down too far into cylinder sleeve.

To prevent this, always loosen valve lever screw clear up and bring piston to top dead center of the compression stroke. Then screw down on adjustment screw until proper clearance is obtained.

REMOVAL OF PISTONS

In case of removal of pistons from the crankcase, care must be taken to see that each part is re-assembled in its original place and position. To assist in this operation, each piston, connecting rod and connecting rod cap is marked with the corresponding cylinder number - viz: 1, 2, 3, 4, 5 and 6 and the cylinder numbers are also marked on the bottom flange of the crankcase.

Each piece should be re-assembled so that the numbers correspond and that all numbers are on the same side of the assembly as the number on the crankcase flange indicates.

IRREGULAR FIRING OF ENGINE

The bleeder valves at the top of the injection nozzles at the cylinder head should be opened only in case of irregular firing caused by entrapped air in the injection lines, or if engine is continuously noisy in one cylinder. Opening bleeder valve will locate noisy cylinder and usually indicate a faulty injector.

(See Instructions on page 8 for venting fuel system).

FUEL INJECTION PUMP AND GOVERNOR

DO NOT ATTEMPT TO ADJUST PUMP OR GOVERNOR

In case of serious trouble, sufficient to cause failure of the pump to operate satisfactorily, check over instructions regarding cleaning and oiling operations.

Use clean fuel oil for good and continuous operation of the Injection Pump.

We recommend, in case of serious trouble, to replace the entire unit, or refer to one of our Service Dealers.

VALVE CLEARANCE

Check valves for clearance every 400 hours and adjust if necessary.

Clearance of .018" is necessary between end of valve levers and valve stems when valves are closed - when engine is hot, and starting mechanism is set for gasoline operation.

It is advisable to ground the magneto to avoid accidental starting. To do this, fasten a wire to ground terminal *(see Illustration No. 22)* and to bolt on crankcase.

Remove spark plug from No. 1 cylinder which is next to radiator. Place thumb over the opening and crank engine slowly until an outward pressure can be felt which indicates No. 1 piston is moving toward upper dead center of compression stroke. Continue cranking until D.C. 1-6 mark on flywheel is in line with pointer on left side of flywheel housing. Both valves are then closed on compression stroke of No. 1 cylinder.

Check clearance of No. 1 valves and adjust if necessary as described under the heading "To Adjust Valves".

Crank engine 1/3 of complete turn of crankshaft until D.C. 2-5 mark on flywheel is in line with pointer.

Check No. 5 valves and adjust if necessary.

Continued this procedure turning engine 1/3 revolution at a time and measuring and adjusting clearances of each cylinder's valves in succession according to firing order of engine, which is 1-5-3-6-2-4.

TO ADJUST VALVES *(see Illustration No. 27)*

Loosen lock nut.

Adjust screw in valve lever so gauge will snugly slip between end of valve lever and valve stem. Tighten lock nut and recheck for clearance with gauge.

Improper valve clearance will result in hard starting, high fuel consumption, burnt valves and lack of power.

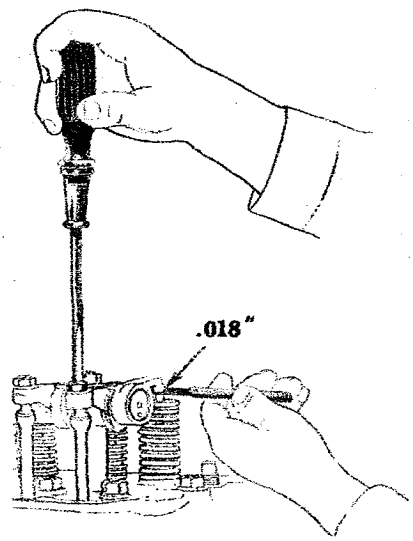

Illustration No. 27
Gauging valve levers with a feeler gauge.

TO ADJUST FAN BELT

To adjust, loosen the nut "A" on fan idler pulley bracket. After adjusting belts to correct tension, tighten nut.

Also check and see that the other nuts holding the bracket in place are tight.

After a new belt has been run approximately 50 hours, check the tension and adjust if necessary.

Having "V" belts tighter than the tension specified results in rapid wear.

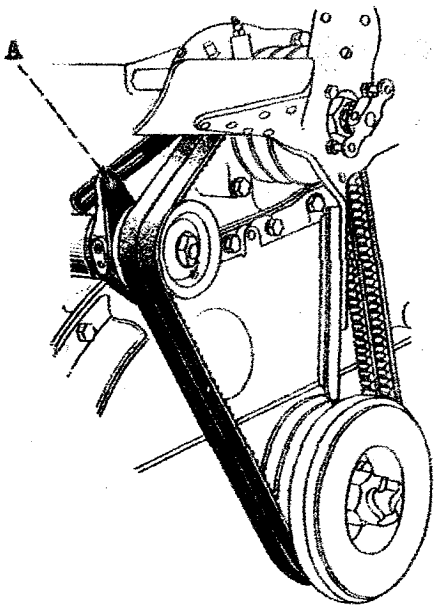

Illustration No. 26
Adjusting Fan Belt

REMOVING AND REPLACING FAN BELT

When belt becomes grease soaked, or so badly worn that it no longer gives side surface on the crankshaft pulley, but sinks down to the bottom of "V" in pulley, it should be replaced, as it no longer gives sufficient surface contact to drive fan at the proper speed.

To remove the fan belt, loosen nut "A" on generator drive housing, slack the belt and slip belt over the fan drive pulleys and fan blades.

To replace the fan belt the reverse procedure should be followed.

WATER PUMP - PACKING

Due to wear after considerable service, the pump may leak. When this occurs, tighten up the packing nut (3) just enough to stop the leaking. *(See Illustration No. 26A)*. After no more adjustment can be made install new packing.

To install new packing, remove driver pin (5) and driver (6). Unscrew and remove packing nut (3). Place packing around shaft and reassemble packing nut, driver and driver pin.

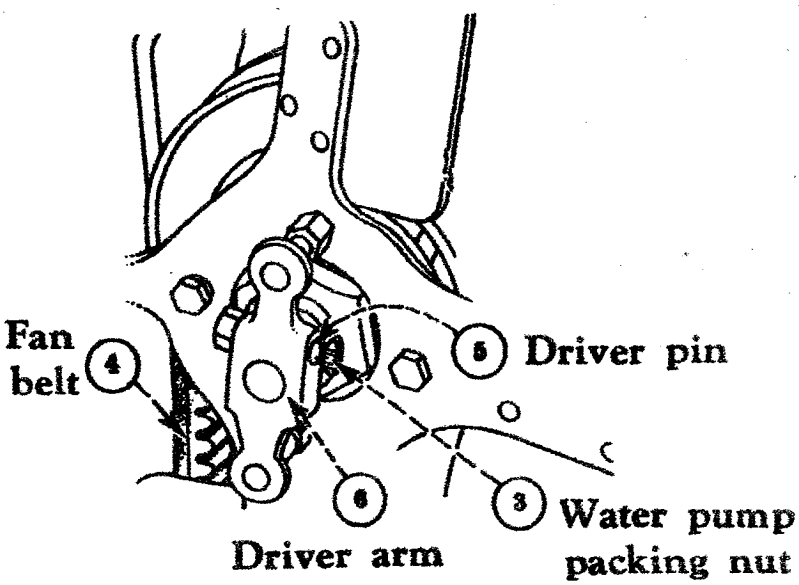

Illustration No. 26A
Water Pump and Fan

RADIATOR - ALWAYS USE CLEAN WATER *(rain or soft water preferred).*

Water from creeks and stagnant pools usually contains dirt or other matter that leaves a deposit in system which impairs cooling efficiency.

Radiator and water system should be cleaned occasionally.

TO CLEAN OUT DIRT OR SLUDGE

Drain system. *(See Instructions on page 7).*

Fill radiator with a solution of 7 to 8 pounds ordinary washing soda with 27 U.S. gallons of water (Water system capacity).

Leave radiator filler cap off and run engine until the water is hot, then drain and flush with clean water.

RADIATOR CORE

Over-heating is often caused by clogged or bent radiator fins.

Spaces between radiator fins can be cleaned by use of an air or water hose.

Use care in straightening bent fins and cleaning so as to not injure tubes or break the bond of fins to tube.

Radiator core with fins loose or broken from tubes will cause over-heating.

CAUTION: Do not pour cold water into system when engine is hot and water level is below top of tubes in radiator. This might cause cylinder head of engine to crack.

FAN BELT

The tension of the fan belt should be checked frequently to assure maintenance of the correct tension. The tension is correct when the belt can be depressed without effort, by the thumb, approximately 3/4" to 1" midway between the idler and drive pulleys *as shown in Illustration No. 25.* If the slack is more than 1", adjust belt.

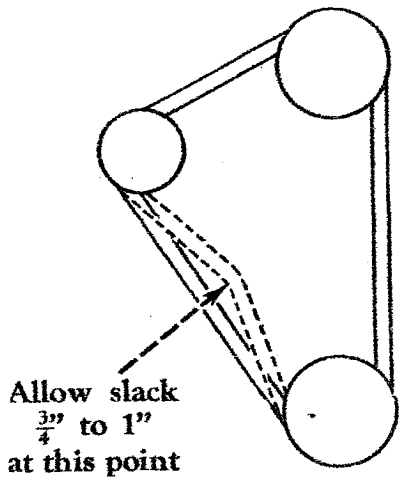

Illustration No. 25
Adjustment Pulley Type.

VARIATION OF SPECIFIC GRAVITY WITH TEMPERATURE

CONSULT THIS CHART

Read the thermometer in the battery acid - read the Hydrometer - then at the top of the table find the column headed by the temperature which is nearest the battery acid temperature; find, in that column, the figure nearest the observed Specific Gravity reading, and trace horizontally across to the 80°F. column. The 80°F. figures are the true acid gravity and should form the basis for any acid adjustment.

The specific gravity of acid in fully charged batteries should not exceed the value specified by the manufacturer (base temperature 80°F.). If hydrometer readings are taken at acid temperatures other than 80°F., allowance must be made for temperature.

All figures in horizontal lines represent the same state of charge but at the various temperatures shown in the column headings; that is, 1.280 Specific Gravity at 80°F. (the base temperature) becomes 1.268 when Electrolyte temperature is 110°F., and 1.312 when Electrolyte temperature is 0°F.

0°F.	10°F.	20°F.	30°F.	40°F.	50°F.	60°F.	70°F.	80°F.	90°F.	100°F.	110°F.	1
1.167	1.163	1.160	1.157	1.154	1.150	1.147	1.144	1.140	1.137	1.134	1.131	1
1.177	1.174	1.170	1.167	1.164	1.160	1.157	1.154	1.150	1.147	1.143	1.140	1
1.187	1.184	1.181	1.177	1.174	1.170	1.167	1.164	1.160	1.157	1.153	1.150	1
1.198	1.195	1.191	1.187	1.184	1.180	1.177	1.173	1.170	1.166	1.163	1.159	1
1.208	1.205	1.201	1.198	1.194	1.191	1.187	1.183	1.180	1.176	1.173	1.169	1
1.219	1.215	1.211	1.208	1.204	1.201	1.197	1.193	1.190	1.186	1.182	1.179	1
1.229	1.225	1.222	1.218	1.214	1.211	1.207	1.203	1.200	1.196	1.192	1.189	1
1.239	1.236	1.232	1.228	1.224	1.221	1.217	1.213	1.210	1.206	1.202	1.198	1
1.251	1.247	1.243	1.239	1.236	1.232	1.228	1.224	1.220	1.217	1.213	1.209	1
1.261	1.257	1.253	1.249	1.246	1.242	1.238	1.234	1.230	1.227	1.223	1.219	1
1.271	1.267	1.263	1.259	1.256	1.252	1.248	1.244	1.240	1.236	1.233	1.229	1
1.281	1.277	1.273	1.269	1.266	1.262	1.258	1.254	1.250	1.246	1.243	1.239	1
1.291	1.287	1.284	1.280	1.276	1.272	1.268	1.264	1.260	1.256	1.252	1.248	1
1.301	1.298	1.294	1.290	1.286	1.282	1.278	1.274	1.270	1.266	1.262	1.258	1
1.312	1.308	1.304	1.300	1.296	1.292	1.288	1.284	1.280	1.276	1.272	1.268	1
1.322	1.318	1.314	1.310	1.306	1.302	1.298	1.294	1.290	1.286	1.282	1.278	1
1.332	1.328	1.324	1.320	1.316	1.312	1.308	1.304	1.300	1.296	1.292	1.288	1
1.342	1.338	1.334	1.330	1.326	1.322	1.318	1.314	1.310	1.306	1.302	1.298	1
1.354	1.350	1.346	1.342	1.337	1.333	1.329	1.325	1.320	1.316	1.312	1.308	1

With battery fully charged and on charge at the normal rate, the cell voltage will be about as follou

Average cell voltage at 80° usually falls between 2.5 and 2.7 volts.
Average cell voltage at 100° usually falls between 2.4 and 2.6 volts.

FOR ACCURACY ALWAYS TAKE ACID TEMPERATURE WHEN READING SPECIFIC GRAVITY.

WIRING DIAGRAM - ELECTRIC STARTING

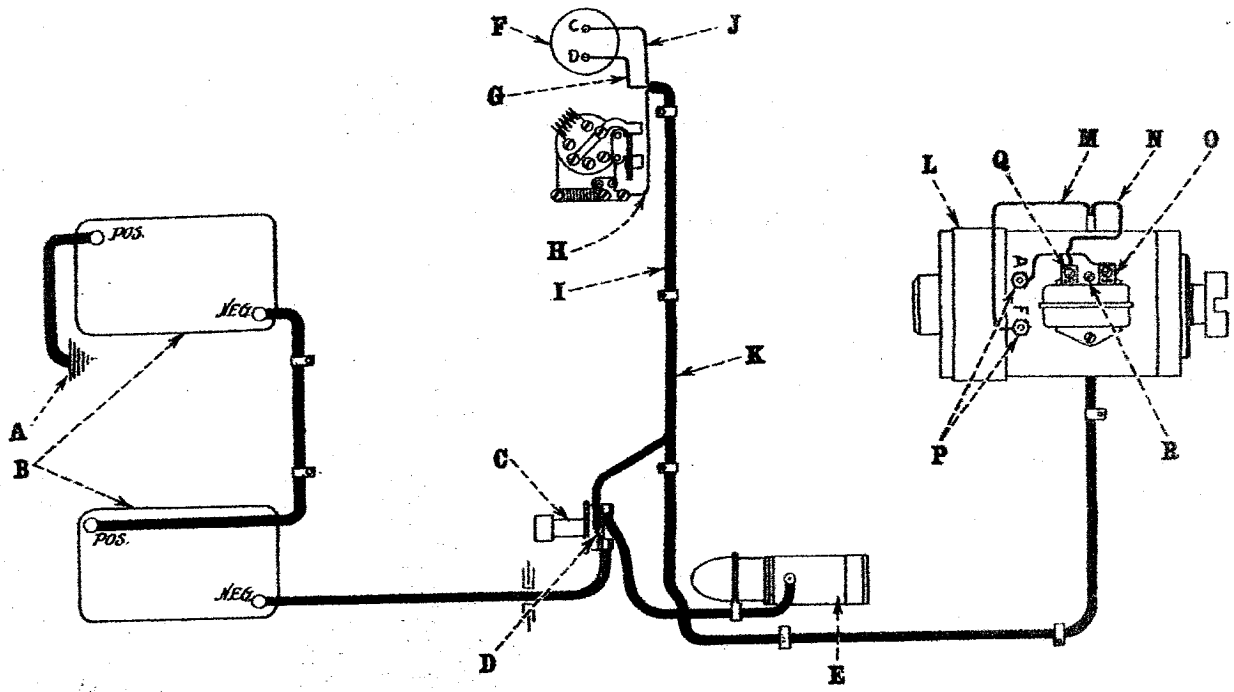

Illustration No. 24

Ref. Letter	Description
A	Ground on main frame cover bolt.
B	Batteries.
C	Starting switch.
D	Starting switch to ammeter cable (natural with red tracers).
E	Starting motor.
F	Ammeter.
G	Cable (natural with black and red cross tracers) generator to ammeter.
H	Cable (natural with black tracer) generator field to switch.
I	Cable harness must be clipped so it lays close against dash and at least 2½" away from exhaust manifold.
J	Cable (natural with red tracers) starting switch to ammeter.
K	Cable harness must be clipped so it does not cross opening in dash for foot brake pedal. Pedal must not touch harness at any time.
L	Generator (50585 D).
M	Cable (natural with black tracer) generator field to switch.
N	Cable (natural with black and red cross tracers) generator to ammeter.
O	"GEN" terminal.
P	NOTE:- Do not run generator with "F" terminal connected to switch uhless battery charging circuit is completed and lead from "A" terminal to "GEN" terminal is connected as shown. If it is necessary to operate generator without battery connections, remove the generator field to switch cable from "F" terminal.
Q	"BAT" terminal.
R	Mounting screw.

If the commutator is dirty, it may be cleaned with a strip of No. 00 sandpaper. *Never use emery cloth.*

) CLEAN COMMUTATOR

All dust must be blown from the generator after the commutator has been cleaned. If the commutator is very rough, or out of round, it is advisable to take generator to an IHC or United Motor Service Station and have commutator reconditioned.

0 ADJUST CHARGING RATE BY THIRD BRUSH

Remove cover band "C" *(See Illustration No. 23).*

Loosen round head screw "A" on commutator end bearing casting until lockwasher tension is released. DO NOT TRY TO REMOVE SCREW. *(See Illustration No. 23).*

The charging rate is changed by moving the third brush "B" *(see Illustration No. 23).* This brush is the one mounted on a movable carrier, whereas the other main brushes are mounted directly on the end bearing casting.

The rate of charge is increased by moving the third brush in the direction of rotation of the armature. To decrease the rate of charge, move the third brush in a direction opposite to that of the armature rotation.

The maximum rate of charge of this generator is 6-8 amperes with generator hot, and 8-10 amperes with generator cold (with switch in high charge position and with no electrical load). *DO NOT SET BEYOND THESE LIMITS.*

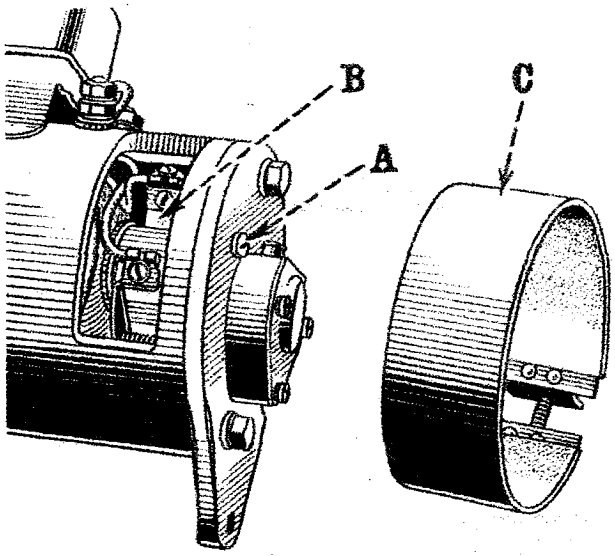

Illustration No. 23
Generator showing Third Brush

Always check the maximum generator output when operating with a fully charged battery.

IMPORTANT! The third brush should never be set closer than 3 commutator bars from main brush. *(See Illustration No. 23A).*

When the above adjustments are completed be sure to tighten the round head screw "A" *(see Illustration No. 23),* which locks the third brush carrier in place.

Reassemble cover band "C" with joint on bottom of generator, so that joint is not over any opening. *(See Illustration No. 23).*

Unless you are familiar with this equipment and how to adjust same, the above adjustment is best done by an IHC or United Motor Service Station. They have the correct equipemnt and capable men to make the adjustment.

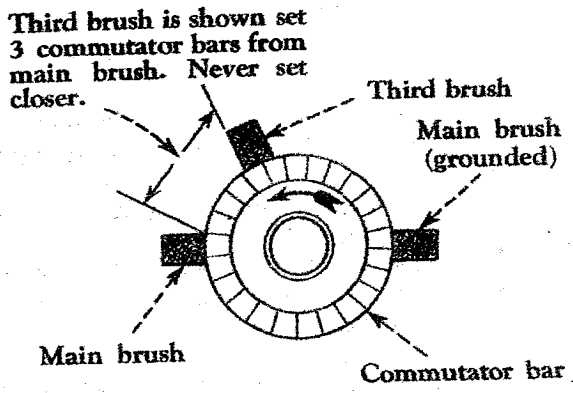

Illustration No. 23A

View showing Commutator End (Brush Setting)

STARTING MOTOR

Whenever the starting motor is removed from the engine, put 8 to 10 drops of light engine oil in oil cup on Bendix drive end of starting motor. *(For regular lubricating instructions see "Lubrication Chart").*

PRECAUTIONS

CAUTION: Before working on any part of the electrical system first disconnect the battery ground cable. Do not reconnect the battery ground cable until all other equipment has been connected. This will avoid shorting and causing damage to any of the electrical units.

Be sure all terminals are clean and securely fastened and that there are no broken wires anywhere in electrical circuit.

TracTracTors are shipped with braided ground strap disconnected at the battery end, and, in addition, the connection at the "F" terminal on generator is not completed. Before operating TracTracTor connect battery to ground cable and wire generator *as indicated in Illustration No. 24.*

DANGER: Generator will burn out if operated with battery cables disconnected or broken. To operate generator without battery, remove connection from "Gen." terminal on relay and ground on relay mounting screw, or remove connection at "F" terminal on generator.

STORAGE BATTERIES

Important! Keep the liquid in the batteries up to the proper level at all times to prevent premature failure of batteries.

Keep vent hole in filler cap open.

Inspect the battery once a week or oftener to keep the water at the correct level and to maintain the correct specific gravity. Specific gravity reading of about 1.250 corrected to 80° F. should be maintained. *(See Chart "Variation of Specific Gravity with Temperature").*

CAUTION: When adding water to battery in temperature near freezing point (32° F.) always run engine long enough to mix the water and the electrolyte or damage to battery from water freezing will result.

Acid or electrolyte should never be added except by a skilled battery man. Under no circumstances add any special battery "dopes", solutions or powders.

The electrolyte in each cell should be 3/8" above the separators. When the electrolyte is below this level, pure distilled water should be added. Never use hydrant water, or any water which has been in a metal receptacle. Keep pure distilled water in glass jar on hand for battery use only. To put water in a cell, use a clean syringe.

Battery cable terminals must be clean and tight. Use hot water for removing terminal corrosion and for cleaning top of battery. Brighten terminal contact surface with wire wool, apply a light coat of vaseline and reassemble. Be sure terminals are clamped tightly and that battery is clamped securely in the battery box. If this is done two or three times a year, no trouble from corroded terminals should be experienced.

GENERATOR AND LIGHT SWITCH

The generator used is a 12 volt type. Because it is a 12 volt type, its ampere charging rate is approximately one-half that of a 6 volt system of equal capacity. It has an adjustable third brush for changing charging rate. Also a light switch with field resistance control is provided to regulate charging rate of generator from instrument panel.

The light switch is used to control generator field resistance and has four positions; Low Charge "L"; High Charge "H"; Dim "D"; and bright "B".

If the switch is turned to either Dim or Bright position the field circuit is direct to the ground giving high charge or increased generator output. This is also true when the switch is on position "H".

During the day time when lights are not used switch should then be put in the "L" position, which adds a resistance coil to the field circuit and cuts the output of the generator. If the battery is low, the switch should be placed in the "H" position until it is recharged.

SPARK PLUGS AND CABLES

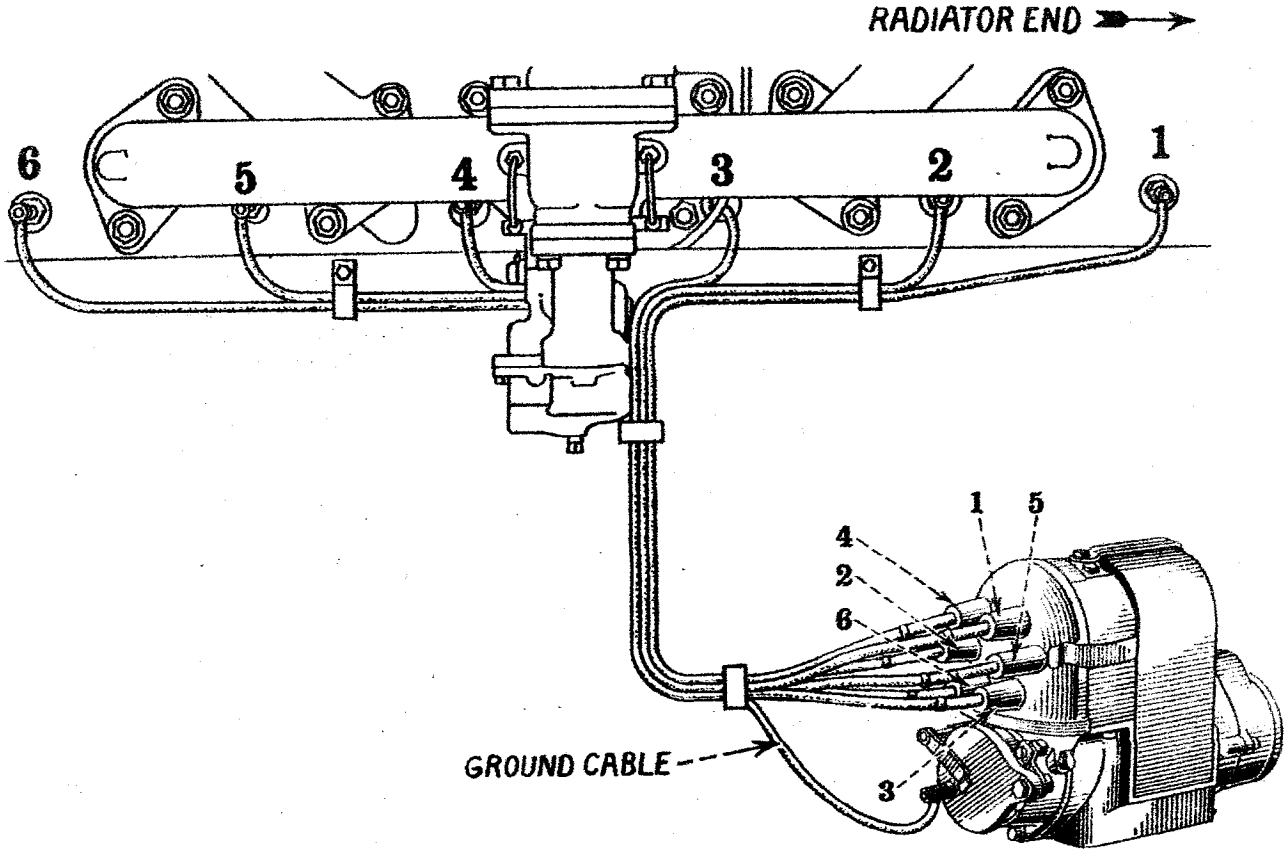

Illustration No. 22, Wiring plan (for F-6 Magneto).

Firing order is 1, 5, 3, 6, 2, 4, beginning at radiator end of engine.

Spark plugs should be removed every 200 to 300 hours or oftener, if necesary, for cleaning and checking gaps between electrodes. A gap of .035" to .040" (or thickness of gauge marked "Spark Plug") should be maintained between the electrodes. When making this adjustment, always bend the outer electrode and never the center electrode as it may damage the insulator.

The spark plugs selected after careful tests as best suited for this engine are the Champion No. 44 and A.C. No. 18 and should be used.

Only a complete set of either type of spark plug should be used on the engine.

If for any reason spark plug cables are removed, note position of each cable on magneto. Wiring Chart *(Illustration No. 22)* shows correct wiring.

CAUTION! Never scrape or clean the insulator with anything which will scratch the porcelain. Scratched porcelain allows carbon and dirt to accumulate much faster.

Sand blasting is the recommended method of cleaning spark plugs.

There should be 1/4" minimum clearance between spark plug cables and cylinder head. This will prevent shorting out the spark plug and will keep the cable away from the extreme heat of the cylinder head. If the cable touches the head, heat soon causes the rubber to become soft and ruins the cable.

Remove the distributor block, grasp the magneto half of the adjustment coupling and rotate it clockwise (as viewed from the coupling end) until the brush in the distributor disc is under the distributor block terminal marked "No. 1", and the breaker points are just beginning to open.

With the magneto in this position, locate the two holes in adjustment coupling that align. Insert shims between the two halves of coupling so cap screws will pass through the holes in shims and enter the holes in tapped half of adjustment coupling.

NOTE: The holes in the adjustment coupling are so spaced that only two pairs of holes will line up exactly. Do not force the cap screws as the setting will be incorrect.

Tighten magneto base cap screws. Replace circuit breaker cover and distributor block, exercising care not to damage the brush or contact spring.

To Check the Timing

Fully retard spark *(See Illustration No. 20).*

Remove circuit breaker cover.

Crank engine until breaker points are just beginning to open. If the timing is correct, the D.C. mark on flywheel will align with timing pointer on rear engine support.

To Check Timing with Impulse Engaged

The impulse coupling should be engaged manually by inserting a small rod or wire into oiler hole *(See Illustration No. 21)* and lifting up on the latch.

Crank engine slowly until impulse trips.

The D.C. mark on flywheel should be in line, or not more than 8° below (1" on flywheel rim) and never above the timing pointer on rear engine support.

Engine firing order is 1, 5, 3, 6, 2, 4 beginning at radiator end of engine.

Attach spark plug cables to engine and magneto. Start by connecting No. 1 cylinder spark plug to socket marked "1" on distributor block. Advancing clockwise on distributor block, connect next socket with No. 5 cylinder, next with No. 3 cylinder, next with No. 6 cylinder, next with No. 2 cylinder and last with No. 4 cylinder. *(See "Magneto Wiring Diagram", Illustration No. 22).*

Be sure the cable terminals are pushed all the way into the distributor block sockets, and that they make good contact, otherwise a green coating will form in the hole.

The magneto is now correctly wired and timed.

When replacing the sheet metal impulse cover, be sure that the joint is lapped, *as shown in Illustration No. 18.*

Magneto impulse cover should always be assembled with hole on the bottom to facilitate drainage in damp or rainy weather.

When operating under extremely dusty conditions, the flap over the hole should be partially closed to prevent entrance of excessive dust.

ENGINE HARD TO START

If the engine has been standing idle for a long time in a damp atmosphere, it may be hard to start due to a wax-like coating that forms on the breaker points. This should be wiped off with a moist cloth, dampened with oil, leaving the contact points bright. If engine does not start, *see "Suggestions for Checking Trouble" on page 44.*

MAGNETO GREASE

The best lubricant for the breaker is long-lived I H C magneto grease (see the I H C Dealer for a supply).

Such grease supplies adequate lubrication for a longer period than oil and does not form a mist in the breaker housing which causes rapid breaker point wear. The cam felt wipes off the excess grease. I H C magneto grease should be used in the rotor ball bearings when the magneto is overhauled.

TIMING THE MAGNETO TO THE ENGINE

If the magneto is removed for any reason, the following instructions must be closely followed in replacing the magneto on the engine:-

ENGINE

Set compression release lever in low compression position for gasoline operation. Crank the engine until No. 1 piston (the piston next to the starting crank) is on the upper dead center of the compression stroke. The compression stroke can be determined by removing the No. 1 spark plug and placing the thumb over the opening and cranking the engine until an outward pressure is felt.

Continue cranking until the D.C. mark on flywheel is in line with pointer on right hand side of rear engine support.

(To see pointer, remove plate on right hand side of rear engine support, above starting motor.)

Fully retard the spark by raising the breaker housing cover as high as it will go. To do this, remove nut "B" and link "A", *as shown in Illustration No. 20;* then carefully remove the breaker housing cover so as to avoid moving the breaker cam.

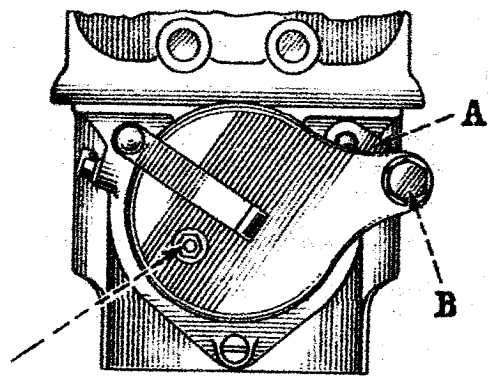

Illustration No. 20
Breaker housing cover with timing link and ground terminal.

MAGNETO

The impulse coupling should then be locked out of engagement by inserting a rod or wire into the oiler hole and lifting the pawl. *(See Illustration No. 15.)*

Rotate magneto clockwise (as viewed from coupling end) until rubbing block in breaker assembly is on high point of cam. Check or adjust point opening to proper setting .020".

Assemble magneto and drive coupling parts on engine bracket. Insert magneto base screws loosely in the magneto. *NOTE: Do not use screws longer than originals as they will damage magneto.*

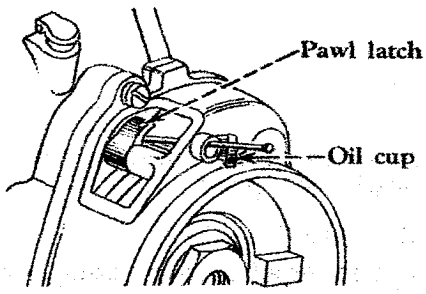

Illustration No. 21

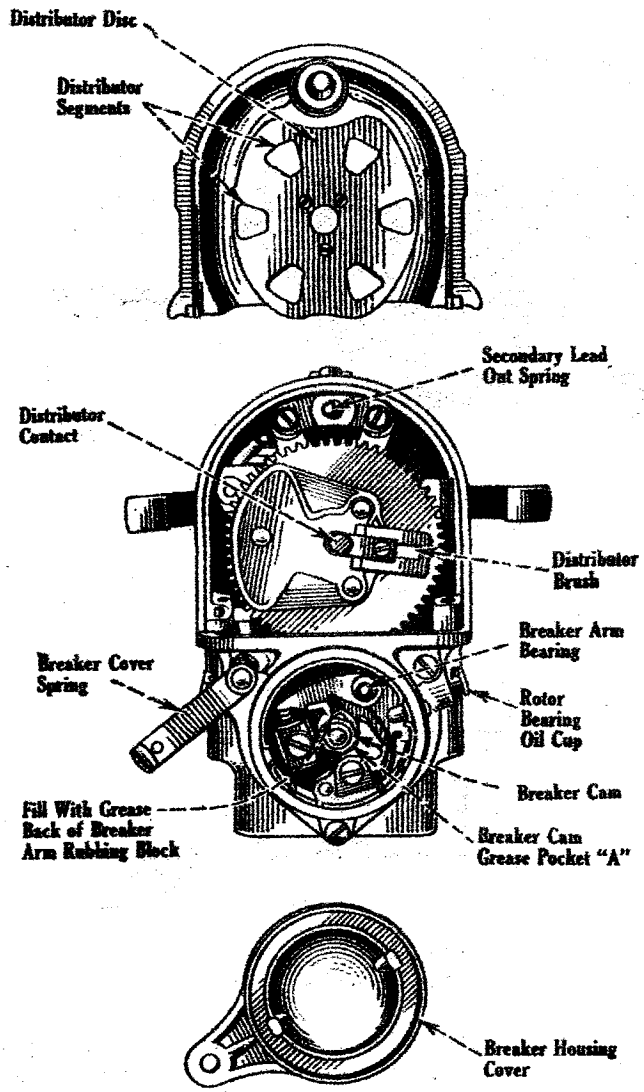

Illustration No. 19
Detail of F-6 Magneto

DISTRIBUTOR

Remove the distributor block, *as shown in Illustration No. 19,* after 200 or 300 hours of operation.

Clean inside of block (1), also face of distributor disc (2), with a clean cloth moistened with kerosene; then wipe dry. Moisten cloth with engine oil and apply *a very light coat* of oil on face of distributor disc.

Caution: Be careful not to damage carbon brush.

It is advisable that once a year magneto be cleaned and overhauled at a McCormick-Deering or International Dealer Service Station.

IF POINTS ARE ROUGH OR PITTED - *(See Illustration No. 16).*

Remove adjustable point (1).
Remove breaker arm with point (2).

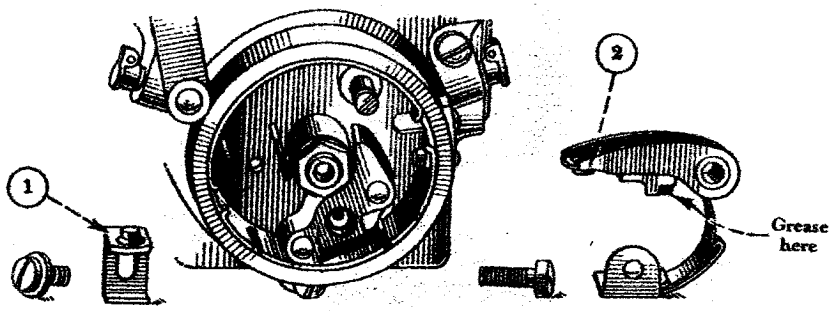

Illustration No. 16
Breaker Arm Removed

Use sharp magneto file to polish contact surfaces. One point should be slightly rounded, *as shown in Illustration No. 17*

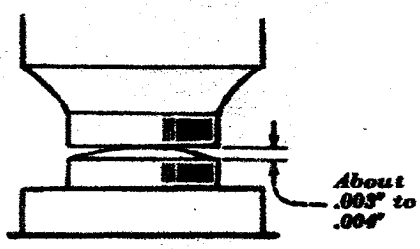

Illustration No. 17
Dressing Breaker Points

Rubbing surface of cam should always be free from dirt and slightly grease coated to prevent excessive wear of breaker arm rubbing block.

Caution: When servicing the breaker mechanism, unusual care should be exercised to prevent the entrance of dust. Long breaker life is assured if the parts are kept clean and well greased.

IMPULSE COUPLING

If coupling does not operate or becomes sluggish, remove coupling drive cover. *(See Illustration No. 18).* Flush with kerosene through coupling oil cup. *(See Illustration No. 12).* Refill with light oil. If coupling still fails to operate, it should be repaired.

When replacing coupling drive cover, be sure joint is lapped, *as shown in Illustration No. 18.*

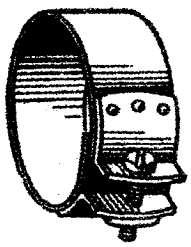

Illustration No. 18
Coupling Drive Cover.

MAGNETO - Continued

The breaker points should be inspected at intervals of 200 to 300 hours of operation for adjustment and general conditioning. The point opening should be .020" when rubbing block is on high point of cam. A gauge of this thickness is furnished in tool equipment.

TO ADJUST POINTS

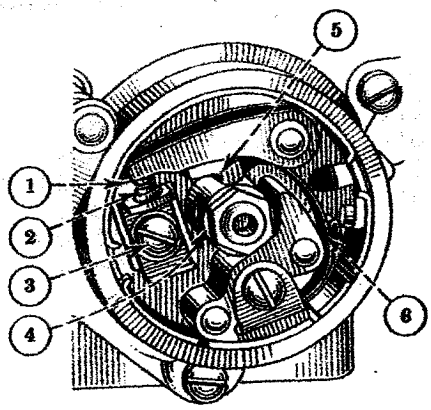

Illustration No. 14

Ref. No.	Description
1	Breaker arm point.
2	Adjustable breaker point.
3	Point support screw.
4	Cam.
5	Rubbing block.
6	Breaker arm spring.

Remove circuit breaker cover (1) *see Illustration No. 12.* Disengage coupling by inserting rod or wire in coupling oiler, and lifting pawl, *see Illustration No. 15.* Crank engine until rubbing block is on the high point of the cam.

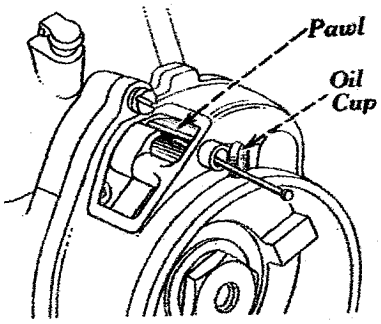

Illustration No. 15

Insert gauge between breaker points (1) and (2). *See Illustration No. 14.* If points are too wide, or too close, loosen screw (3) slightly. Adjust so gauge will slip snugly in opening. Tighten screw (3) and recheck opening. *(Use screw driver as a pry to move point support).*

MAGNETO - Continued

The breaker points should be inspected at intervals of 200 to 300 hours of operation for adjustment and general conditioning. The point opening should be .020" when rubbing block is on high point of cam. A gauge of this thickness is furnished in tool equipment.

TO ADJUST POINTS

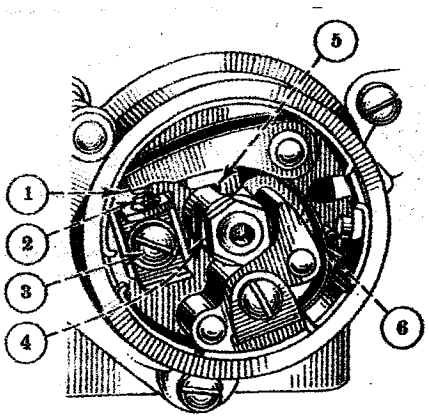

Illustration No. 14

Ref. No.	Description
1	Breaker arm point.
2	Adjustable breaker point.
3	Point support screw.
4	Cam.
5	Rubbing block.
6	Breaker arm spring.

Remove circuit breaker cover (1) *see Illustration No. 12.* Disengage coupling by inserting rod or wire in coupling oiler, and lifting pawl, *see Illustration No. 15.* Crank engine until rubbing block is on the high point of the cam.

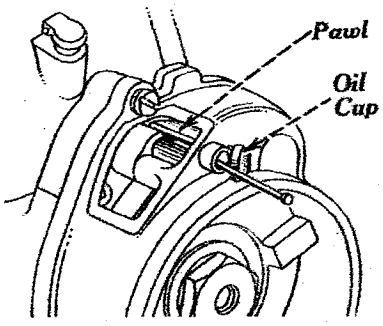

Illustration No. 15

Insert gauge between breaker points (1) and (2). *See Illustration No. 14.* If points are too wide, or too close, loosen screw (3) slightly. Adjust so gauge will slip snugly in opening. Tighten screw (3) and recheck opening. *(Use screw driver as a pry to move point support).*

The engine is equipped with the International F-6 Magneto with Automatic Impulse Starter Coupling.

Magneto is permanently engaged, but spark is eliminated by means of ground (cut-out) switch, which is operated automatically when operating on the Diesel cycle.

LUBRICATION

A very light oil such as Cream Separator or Sewing Machine Oil should be used in Magneto. *Do not use Engine Oil.*

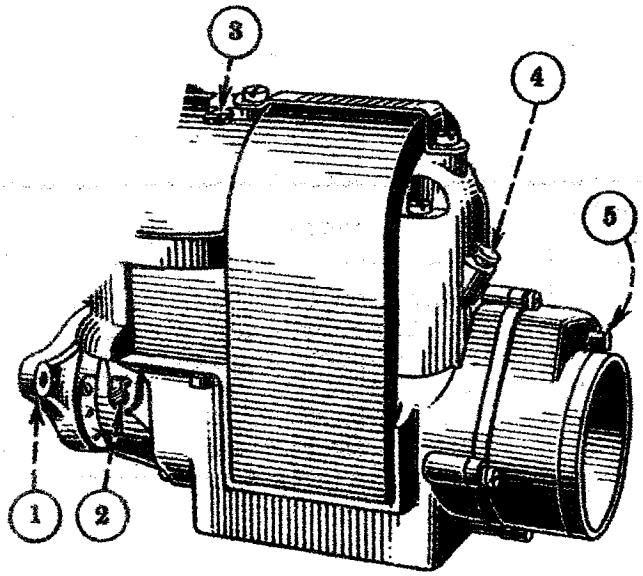

Ref. No.	Description
1	Circuit breaker cover.
2	Rotor bearing oil cup.
3	Distributor bearing oil cup.
4	Rotor bearing oil cup.
5	Impulse coupling oil cup.

Illustration No. 12

After approximately 500 hours of service, remove circuit breaker cover (1) and lubricate breaker assembly. (Use IHC magneto grease).

After approximately 500 hours of service, fill distributor bearing oil cup (3) once (use light oil).

After approximately 1000 hours of service, oil rotor bearings (2 and 4) with a few drops of light oil.

Every week oil impulse coupling (5) liberally. (Use light oil). Use kerosene in cold weather.

If engine has been idle for two or three months, fill rotor bearing oil cups (2 and 4) twice, and impulse coupling (5) liberally.

See IHC Dealer for approved grease where specified.

TO GREASE

Remove breaker arm (3). Pack recess (2) in breaker arm post with grease. Pack small grease pocket (1) for cam. Pack small quantity of grease back of breaker arm rubbing block (4).

Breaker arm spring should be cleaned and wiped with a piece of cloth dampened with oil to prevent rusting.

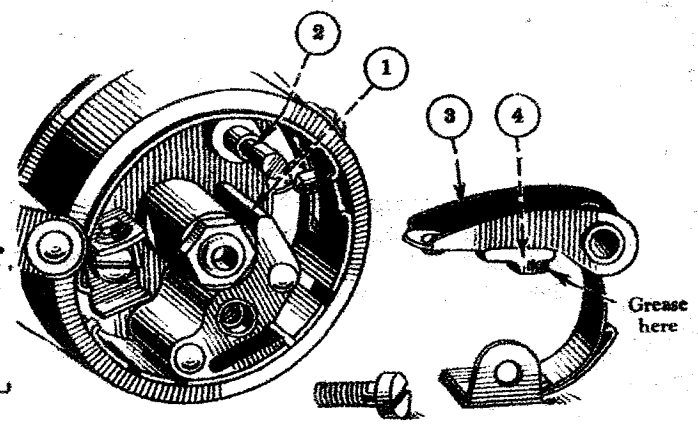

Illustration No. 13
Circuit Breaker

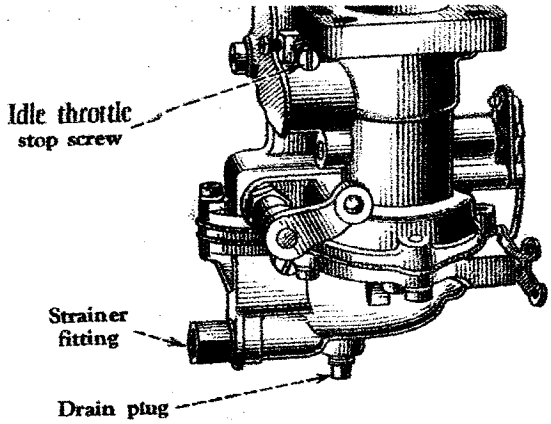

Illustration No. 11

The model C-12 Carburetor is used only when starting the engine. The gasoline level is controlled by a conventional float and float valve mechanism when starting and running on gasoline. The float valve is locked into its seat, shutting off gasoline to fuel bowl when engine changes over to operate on Diesel.

The float valve is protected against dirt and foreign material by a strainer. This strainer should be removed occasionally and cleaned.

NOTE: Periodically, check the screws fastening the fuel bowl to fuel bowl cover and see that cover screws are kept tight to avoid any air leak past the fuel bowl cover gasket.

TO CLEAN STRAINER

Close gasoline shut-off valve at gasoline tank.
Disconnect gasoline pipe at carburetor.
Unscrew strainer fitting from carburetor, wash off in kerosene and reassemble.
Open gasoline shut-off valve.

The throttle shaft is so located that when the air passing through the carburetor reaches a certain speed, the air pressure against the throttle butterfly overcomes the tension of the throttle spring and closes the throttle.

The throttle lever comes in contact with the idle throttle stop screw after throttle closes; the position of this stop screw then controls the engine speed.

The starting choke regulates the air for starting.

ADJUSTMENT - *(In case Carburetor has been disturbed)*

To Adjust Idle Speed

Loosening idle throttle lock screw and turning out idle throttle stop screw reduces speed of engine.

NOTE: In cold weather the idle throttle screw should be readjusted to get correct idling speed.

Engine speed, when operating on gasoline, should not exceed 800 RPM.

Present day grade of gasoline has a tendency to form gum; therefore, it is necessary that gasoline tank and fuel bowl be completely drained of fuel when engine is to be out of service for more than two weeks.

These gum deposits can be completely dissolved with a mixture of one part alcohol and one part benzol, or with acetone.

COMBINATION CLOTH AND METAL ELEMENTS

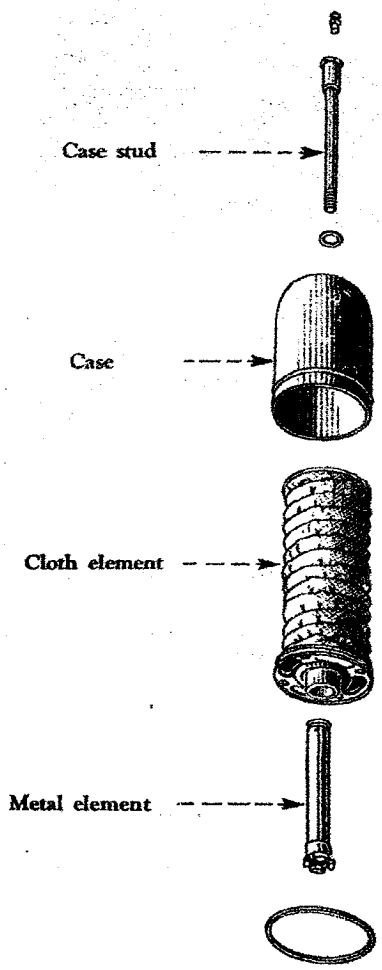

Illustration No. 10

The fuel oil filter, which is the front unit of three on the left side of engine, should be cleaned regularly to remove any accumulation of dirt of sediment. The period between cleanings will depend upon the cleanness of fuel used, but it should not exceed 60 hours of operation. When exceptionally dirty fuel is used, it may be necessary to clean filter daily, otherwise fuel flow will be restricted to a point where engine will not operate satisfactorily.

0 CLEAN ELEMENTS

Remove case stud and case.

Remove the elements and wash both the metal and cloth elements with kerosene or fuel oil. After cleaning fuel filter elements, vent the air from the injection system before operating on the Diesel cycle. This may be done as previously described *on page 8.*

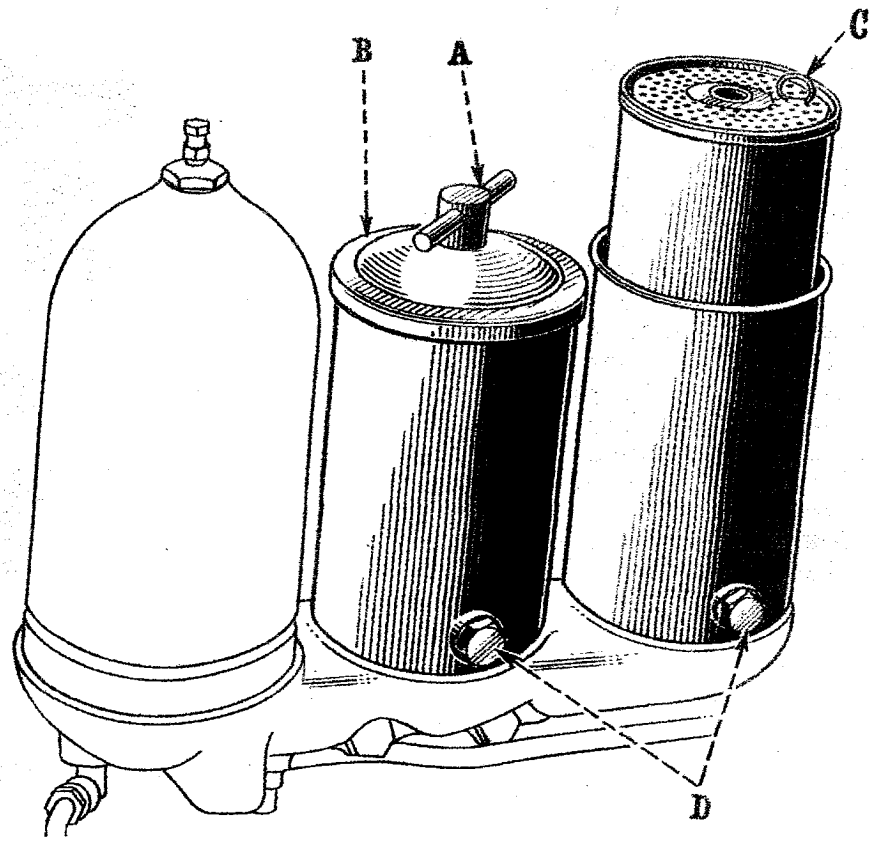

Illustration No. 9

NOTE: The following instructions apply to Absorption Type Oil Filters.

The oil filter elements are housed in the rear two shells of the group of three on the left side of the engine. Absorption elements should be removed and replaced with new elements every *100* hours of operation.

To replace elements, loosen the bar nuts "A" on top of the two shells and remove the caps "B" over the shells. Remove old elements "C". Remove drain plugs "D" to allow sediment and sludge to drain out. Replace with new elements; then replace the caps, tightening the bar nuts by hand only.

NOTE: Drain crankcase oil completely after every *100* hours of operation, at the same time filter elements are replaced.

To avoid delays, the owner should carry extra Lubricating Oil Filter elements on hand for replacement at the proper time.

The fuel oil water trap located below the injection pump, should be taken apart and *cleaned at least once a week.* To do this, remove the engine side plate (left hand). Close fuel shut-off valve under tank. Loosen thumb nut (or screw) "A" under water bowl. Raise up bail and swing to rear. Then remove the glass bowl. Unscrew nut "B" and remove screen "C". If screen is dirty, wash screen and glass bowl in kerosene to remove all dirt and sediment. Reassemble screen and nut "B", then glass bowl and bail. Gasket "D" must be in its proper place and in good condition. Tighten up nut "A" by hand. After reassembling, open fuel shut-off valve, then open bleeder valve "E" to vent any air. Leave open until fuel flows through, then close bleeder. Replace side plate.

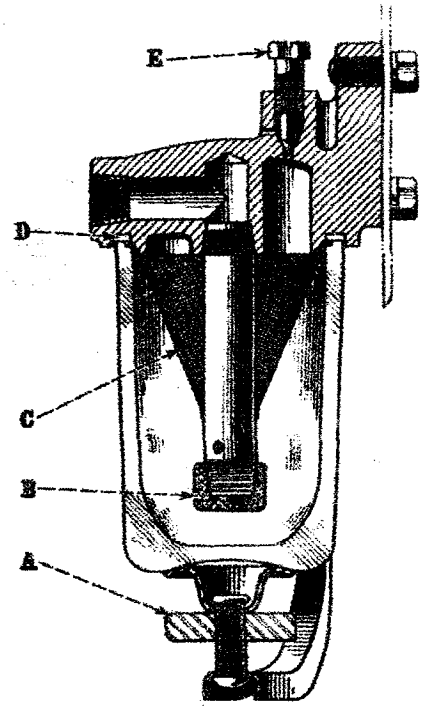

Illustration No. 7

CLEANING THE GASOLINE STRAINER AND SEDIMENT BOWL

The gasoline strainer located under the gasoline tank, should be *cleaned at least once a week.* First close the gasoline shut-off valve.

To take strainer apart, loosen the lower jam nut.

Clean out sediment bowl and clean screen if necessary.

In reassembling the gasoline strainer, be sure that cork gasket between the bowl and main body is in good condition and does not leak.

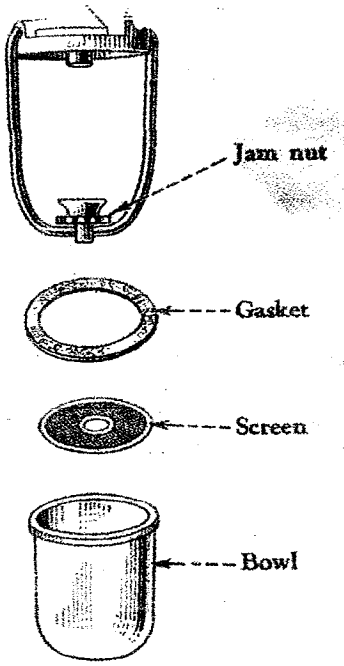

Illustration No. 8
Gasoline Strainer showing
Glass Bowl removed
for cleaning.

SERVICE AIR CLEANER DAILY (10 hours) (more frequently under severe dust conditions). Clean and refill oil cup to oil level bead with same grade oil as used in engine crankcase.

IR INTAKE CAP

The air intake cap is provided with an inlet screen to prevent large particles, such as chaff, leaves, etc., from entering the air cleaner.

Keep this inlet screen clean. The holes must be kept open and free of paint. Dust, oil or water may collect on the screen and clog up the holes enough to restrict the flow of air to the engine. Restricted air flow will reduce the horsepower delivered by the engine.

IR INTAKE PIPE

The air intake pipe from intake cap to the air cleaner should not be allowed to collect dirt on the inside. Remove and clean this pipe when air cleaner is removed. At the same time, clean inlet tube through air cleaner.

ASHING CLEANER

Inspect lower screens at intervals frequent enough to insure clean screens. It may be necessary to clean the lower screens every 50 hours of operation if operating in an atmosphere heavily laden with dust, chaff or lint.

To clean removable screens, loosen the clamp on the center tube and remove the two lower screens for washing. If the third screen is plugged, remove the entire cleaner and wash thoroughly in kerosene.

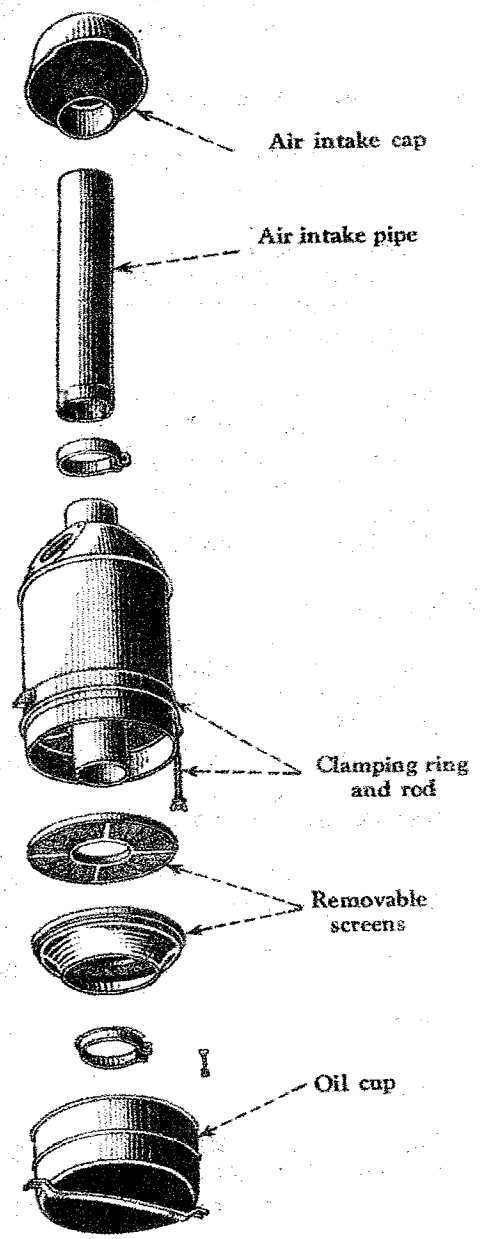

Illustration No. 6
Exploded View of Air Cleaner and Air Cap.

Replace the air cleaner, make sure all joints are air tight and the screens are held firmly in place. Replace air intake cap and replace oil cup properly filled with oil. Make sure oil cup is held securely in place by cup clamp.

ENERAL PRECAUTIONS

To prevent the entrance of dirt into the engine, it is absolutely essential that frequent inspections be made of flexible rubber connections to the carburetor and air cleaner. Flexible connections should be replaced before they deteriorate. To eliminate any undue strain on the connections, make sure pipes line up. See that all joints between the air cleaner and the cylinders of the engine are tight. This includes flexible connections, carburetor and manifold joints and gaskets. All gaskets must be in good condition and bolts drawn up tight.

Should TracTracTor be left out during cold weather and tracks are frozen to ground, do not attempt to jerk tracks loose with power of engine. Loosen the tracks before starting TracTracTor.

PERATING IN WATER OR SNOW

If TracTracTor is operating in deep water or in snow that is in a thawing condition, lubricate track rollers every five hours. This will flush out water that might be forced past seals into lubricants. If operating in water deep enough to submerge bottom of transmission case, inspect transmission lubricant in transmission case and drive gear sprocket case frequently. If any water is present, drain and refill with new oil.

NOTE: When operating in water, under very wet conditions, or under extreme dust conditions, where water or dust is apt to come in through holes in drain plugs on engine clutch compartment or steering clutch compartment, these plugs should be removed and replaced with solid plugs, which have no holes. Occasionally remove plugs to allow any oil accumulation to drain out.

VATER SYSTEM

When temperature is apt to be 32° F. or lower, there is always danger of water freezing in cooling system. To avoid such consequences, there is one simple precaution to practice, that is:- *Drain water from the cooling system at the end of every run.*

D DRAIN WATER SYSTEM

Open radiator drain cock on lower right hand side of radiator below fan idler pulley.

Open pet cock in right hand side of crankcase.

Open pet cock in thermostat housing.

See that drain cocks are not plugged and that water drains completely.

Important: When filling radiator in freezing weather, cover entire radiator. Start engine - then put in water immediately. This prevents water from freezing during warming up period.

ANTI-FREEZING SOLUTIONS

% By Volume	Distilled Glycerine			Ethylene Glycol (Prestone)		
	Freezing Point		Specific Gravity	Freezing Point		Specific Gravity
	°C	°F		°C	°F	
0%	0	32	1.000	0	32	1.000
10%	-2	29	1.029	-3	26	1.016
20%	-6	21	1.057	-9	16	1.031
30%	-11	12	1.085	-16	3	1.045
40%	-18	0	1.112	-24	-11	1.058
50%	-26	-15	1.140	-35	-31	1.070

Important!

Alcohol should not be used as an anti-freeze solution as it will boil away at average operating temperatures.

Do not use a solution of calcium chloride or any alkaline solution as they are injurious to the metal parts.

Water Cooling System Capacity is 27 U.S. gallons.

If TracTracTor is to be operated when temperature is below 32° F., protective precautions are necessary.

Use "Winter" transmission and track roller lubricants. *(See "Lubrication Chart").*

Transmission oil must be light enough to flow in prevailing atmospheric temperatures. If transmission lubricant available is too heavy, dilute sufficiently with lighter oil so it will flow readily. Failure of transmission lubricant to flow readily will soon cause bearings to be without oil.

GINE STARTING

For starting engines during cold weather, it is important that engine be kept in the best possible mechanical condition.

It may be advisable to remove the spark plugs and make sure they are dry, and at the same time check the spark gap.

After drying the plugs, replace them in the engine, then start as usual.

Have oil in engine crankcase light enough that engine will not be too stiff to start.

If desired during very cold weather, the engine oil in the crankcase pan can be completely drained each night. Do this while the oil is warm so it will drain freely. Before refilling, warm oil thoroughly and pour into crankcase just before starting the engine. This will insure oil thin enough to pass through screen over pump section; this also prevents condensation of moisture in crankcase pan.

Use kerosene in magneto coupling in extremely cold weather. Be sure to have light oil in air cleaner oil cup *(see page 16).*

Prime intake manifold with gasoline using 4 or 5 strokes of the primer. The number of strokes will depend on operating temperatures. (Primer control rod button is the button farthest to the right on the upper right section of the dash *(see Illustration No. 4).*

Use a good grade of winter gasoline for starting.

Filling the fuel tank at end of day's run will prevent moisture from collecting in the tank.

If engine has been idle for any length of time, check crankcase pan, fuel tank and fuel bowl for any ice formation before starting.

Also see Magneto Instructions for further information.

If trouble is experienced see "Suggestions for Checking Trouble" on page 44.

ORING AND HOUSING

When a TracTracTor is not to be used for a period of time, it should be stored in a dry and protected place. To leave a TracTracTor stand in an open field or yard exposed to rain and snow will result in materially shortening the life of the TracTracTor.

When Diesel engines are to be out of service for an extended period of time, the I H C Service Station should be consulted for the necessary instructions for handling engines in storage.

Para.	*Illust.*	
34	4	When running over a log or ditch bank, use steering clutches instead of engine clutch to slow TracTracTor. Both steering clutches may be released slightly until TracTracTor balances on top of obstruction. Then engage one clutch gradually so TracTracTor moves forward at an angle, over and down. If load is light, it might be necessary to use brakes.

STEERING DOWN GRADE

35	4	Going down grade with TracTracTor pulling the load, steering is in the usual manner. If the "load is pushing the TracTracTor", steering clutch operation is reversed. Under such conditions, to turn to the right, release left hand steering clutch, but do not apply brake. The left hand track will then travel faster, while the right hand track is retarded by the engine, acting as a brake.

STEERING BRAKE LOCK

36	4	Each foot brake pedal is provided with a locking lever device. To lock either brake, push foot brake pedal down and lift up ratchet pawl *(See Illustration No. 32)*, which engages in ratchet, locking the brake pedal.

TO STOP THE TRACTRACTOR

37	4,5,5A	Disengage the clutch by pushing forward on clutch lever and move gear shifting lever to neutral position. Use the brakes if necessary. **SAFETY-FIRST:** *Stop Power Take-Off before dismounting from TracTracTor.*

TO STOP THE ENGINE

38	4,4A	In preparing engine for stopping, make sure gasoline is turned on, then retard engine speed control lever and at the same time switch over to low compression by raising the compression release lever until starting mechanism engages. Let engine run long enough on gasoline to burn out any accumulated oil that has gathered in low compression chambers. It has been found that this is an added protection against starting failures. Should the engine fail to fire after shifting from Diesel to gasoline, it should be immediately started on gasoline. As soon as the engine starts on gasoline, shut off the gasoline fuel supply to tank and allow engine to use up supply of fuel in carburetor. Engine should be left in the gasoline starting position until next time it is to be started, at which time gasoline fuel supply should be turned on again at tank.

DRAWBAR

Drawbar should be free to swing unless it is absolutely necessary to hold in one position.

29 4,5,5A The high and low range on the transmission is controlled by the hand lever located just in front of the seat and to the left of the center of TracTracTor. Moving this lever forward gives the low range, and backward the high range.

When Hi-Lo range lever is in the down (forward) position the TracTracTor can be shifted to either low-reverse, 1st, 2nd, or 3rd speed by the regular gear shifter lever.

When Hi-Lo lever is in the up (backward) position, the Trac-TracTor can be shifted to high-reverse, 4th, 5th, or 6th speed.

The TracTracTor can be shifted from low to high-reverse, from 1st to 4th, from 2nd to 5th, and from 3rd to 6th, or vice-versa, by shifting only the Hi-Lo range lever.

After selecting the proper gear speed, advance engine speed enough to prevent engine stalling and engage the engine clutch by pulling the hand lever back slowly.

Always disengage clutch before making a gear shift.

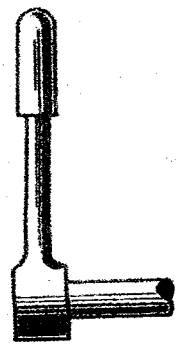

Illustration No. 5
Up (Backward) Position
Hi-Range
Down (Forward) Position
Low-Range

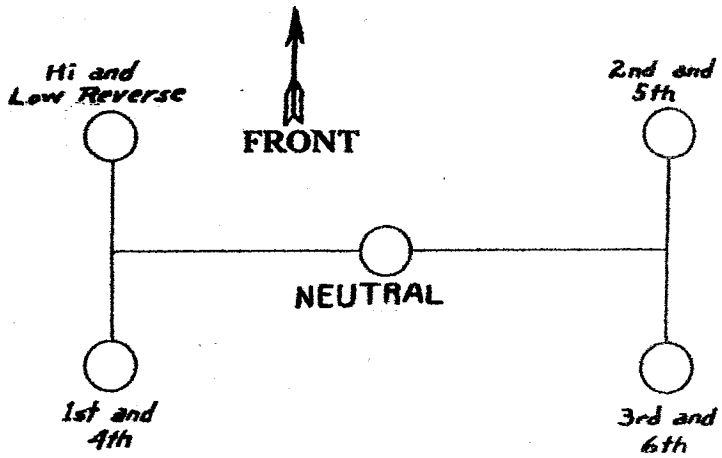

Illustration No. 5A
Gear Shift Positions

STEERING THE TRACTRACTOR

30 4 Steering the TracTracTor is accomplished by means of the two hand levers in front of the operator. Pulling back on either steering lever will cause TracTracTor to turn in that direction. The degree of turning can be governed by the application of foot brake on side toward which it is desired to turn.

Do not apply steering brake until steering clutch is fully released.

31 4 When pulling a load, it is not necessary to use steering brakes except to make sharp turns; - the load itself acts as a brake. *Do not use brakes unless necessary to make required turn.*

32 4 Pulling back on either steering lever releases steering clutch, making track on that side inoperative while opposite track, being under power, causes inoperative track to become a pivot-ing point and TracTracTor turns in that direction.

33 4 Avoid making turns by a series of jerks by improper use of steering brakes. When making other than a pivot turn, use steering control lever intermittently with but slight pressure on brake pedal. This makes a more even turn and does not sub-ject TracTracTor to sudden impacts.

Paragraphs are numbered to correspond with numbers on the illustrations.

Para.	*Illust.*	
23	4,4A	After engine has operated on gasoline for about 1 minute, the compression release lever latch will automatically release, *then immediately unlatch engine speed control lever lock* on engine speed control lever by pushing lever lock away from control lever, and advance engine speed control lever partway and the engine should operate on fuel oil as a Diesel engine.
24	1	*Close the gasoline shut-off valve at supply tank after engine is operating on Diesel cycle.*
25	.....	Carburetor is automatically cut out when on Diesel operation, and is ready for use again when starting on gasoline.
26	.....	Magneto is timed with the engine and is permanently connected. The ground (cut-out) switch is operated automatically by the starting mechanism. The engine may start noisly when Diesel operation begins, but noise will be eliminated as the engine warms up.

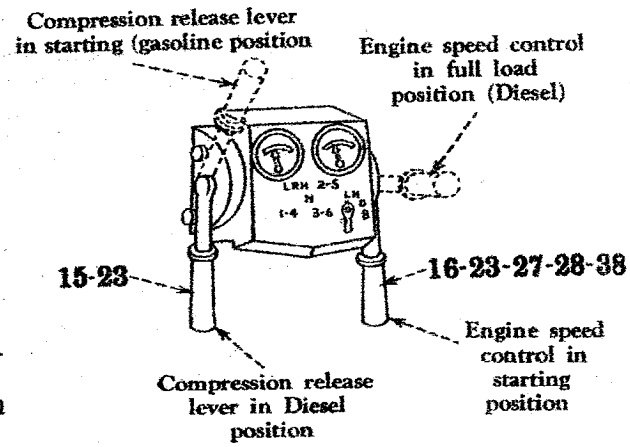

Illustration No. 4A

ENGINE SPEED CONTROL HAND LEVER

27	4,4A	Governor or engine speed control hand lever must be adjusted for proper advance for load to be handled and should not be fully advanced until the engine has been run a few minutes. This will insure thorough distribution of the lubricating oil. The rated or maximum full load governed speed is 1200 R.P.M.; maximum idle speed is 1260 R.P.M.; minimum speed (hand throttle) is 450 R.P.M.

TO START THE TRACTRACTOR

28	4,4A	With the engine speed control hand lever set in the desired position, push forward on engine clutch control lever (to disengage the clutch), then move gear shift lever to desired speed.

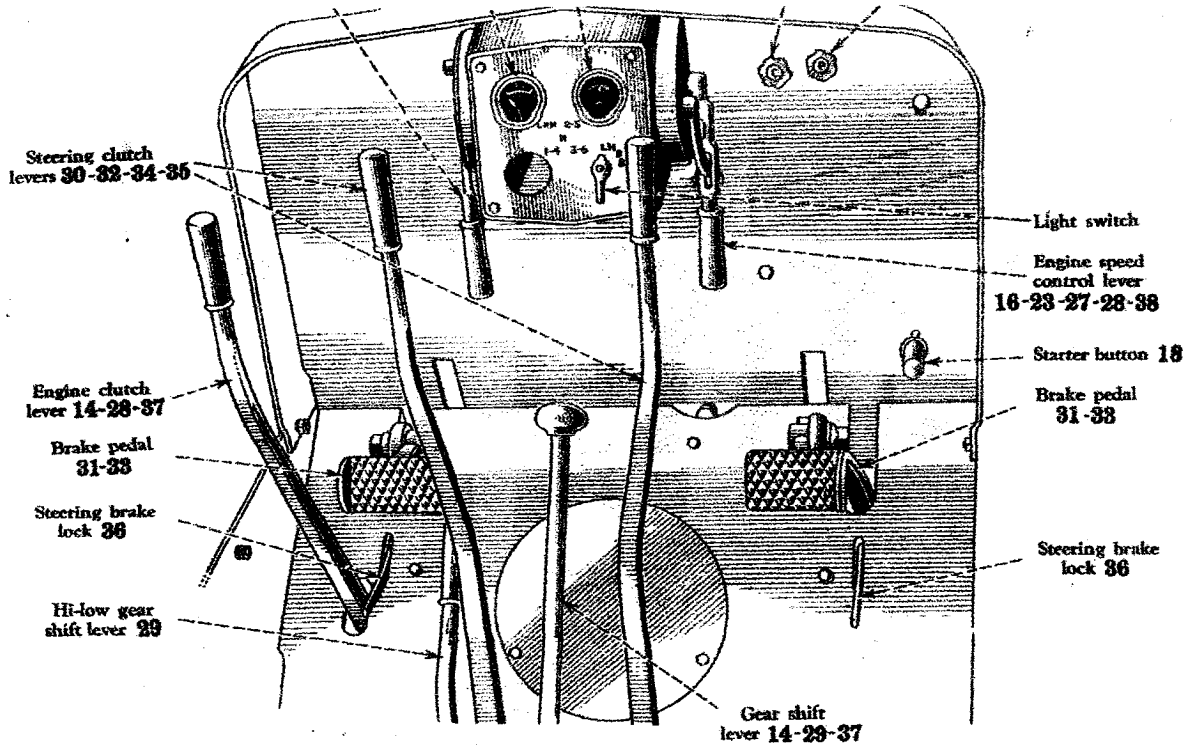

Illustration No. 4 - Operating Controls

Paragraphs are numbered to correspond with numbers on the illustrations.

TO START ENGINE

Para.	*Illust.*	
18	4	Pull choke button (inside button) all the way out and step on starter button. Push choke in half-way after the first few revolutions of engine. *When using hand crank,* pull choke button all the way out and crank engine with 2 or 3 half up-strokes. Push choke back half way and crank with half up-strokes until engine starts.
19	4	As soon as engine starts, set choke to where engine runs without missing.
20	4	When engine is running, be sure that oil gauge on instrument panel indicates pressure.
21	...	*Note:* If difficulty is experienced in starting on gasoline in cold or damp weather, spark plugs should be removed and wiped off to insure removal of all condensation. *See priming instructions on page 14.* *For starting in cold weather, see page 14.*

ENGINE SPEED WHEN OPERATING ON GASOLINE

22	...	The engine speed, when operating on gasoline, should not exceed 800 R.P.M. The engine speed is adjustable through stop screw and spring at carburetor. *(See Carburetor Instructions, page 20).*

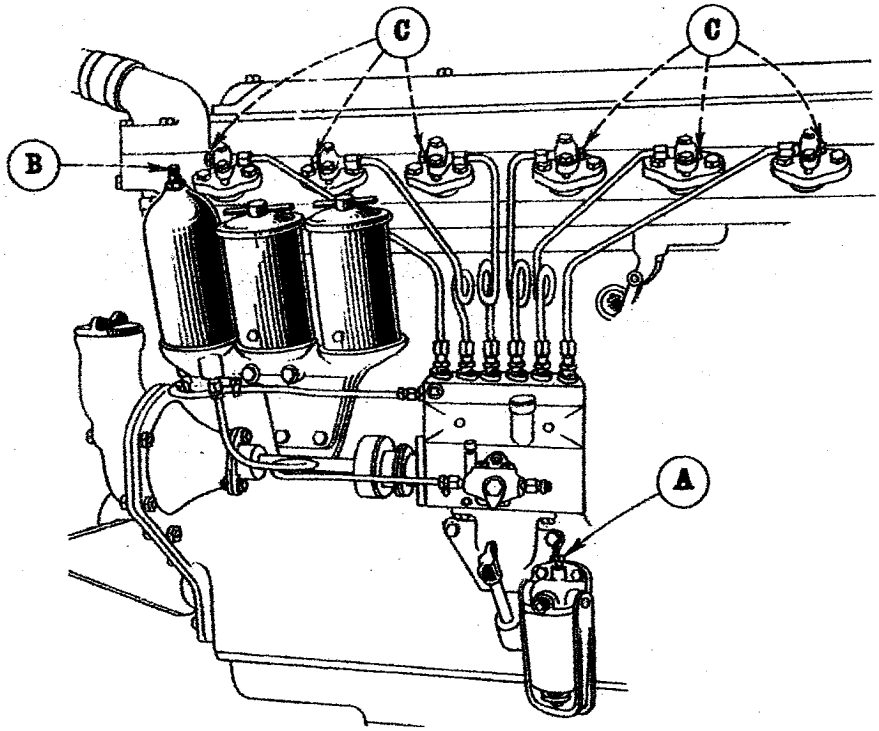

Illustration No. 3
Air Vents at Water Trap, Fuel Filter and Injection Pump.

Paragraphs are numbered to correspond with numbers on the illustrations.

BEFORE STARTING ENGINE

Para.	*Illust.*	
14	4,5,5A	Place the gear shifter lever in neutral position and disengage the engine clutch by moving the hand lever all the way forward.
15	4,4A	Raise the compression release lever (at the left of the instrument panel) until the lever strikes upper stop, and then release the lever.
16	4,4A	Set engine speed control lever (at the right of instrument panel) down so that it latches in shut-off position.
17	4,4A	*CAUTION!* The engine speed control lever should be left in shut-off position (lever pulled down) until the starting device trips from gasoline to Diesel operation. If this is not done, engine will be flooded with fuel oil, exhaust will be extremely smoky, and engine will knock when switching to Diesel operation.

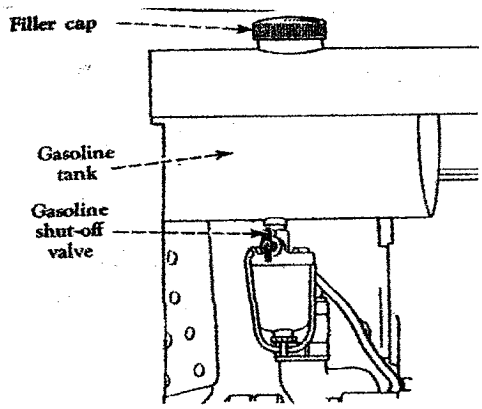

Illustration No. 1
Gasoline Tank and Shut-Off Valve

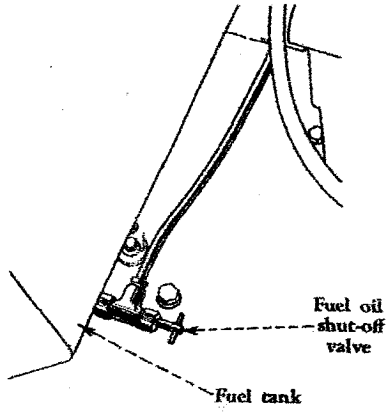

Illustration No. 2
Fuel oil Tank and Shut-Off Valve

IR VENTS AT INJECTION NOZZLES, FUEL FILTER AND WATER TRAP

'OTE: The engine will fail to run on the Diesel cycle if there is any air n the fuel injection system.

Para.	*Illust.*	
12		To remove the air, it is necessary to bleed the system by opening the vent cocks successively on the water trap, fuel filter and injection nozzles.
		With the fuel tank shut-off valve open, open the vent cock "A" on the water trap (with engine stopped). Close the vent cock when fuel starts to flow.
		Open the fuel filter vent cock "B"; then start the engine. With the engine operating on the gasoline cycle, unlatch control lever lock on engine speed control lever by pushing lever lock away from control lever; then advance engine speed control lever to upper stop while venting fuel lines and injection lines. Close the vent cock when fuel starts to flo
		Open each nozzle vent "C" individually. Close each cock when the fuel starts to flow.
		It may be necessary to start engine and operate it several times successively on gasoline before completing the air bleeding operation.

SPARK CONTROL

13	.....	The magneto spark is set in a fixed position for running; no manual operation is necessary.

Paragraphs are numbered to correspond

LUBRICATION

Para.	*Illust.*	
1	.....	Check oil level of fuel injection pump.
		Check oil level of air cleaner.
		Check oil level of engine crankcase.
		Check oil level of transmission case.
		Check oil level of sprocket drive gear cases.
		Check TracTracTor carefully with "Lubrication Chart".
		If any lubrication connections are missing, replace before starting.
		Lubricate each place throughout entire TracTracTor *as instructed on "Lubrication Chart".*

ENGINE COOLING SYSTEM - *(Water Capacity 27 U.S. gallons approximately).*

2	.....	Close drain cock on right hand side of crankcase.
3	.....	Close radiator drain cock on lower right hand side of radiator below fan idler pulley.
		When filling radiator, open vent cock in thermostat housing and close cock when water appears.
4	.....	Remove radiator filler cap and fill radiator with clean water to the level 1" above baffle plate (inside of filler hole). Keep filled to full level. Use soft or rain water if possible.
5	.....	Do not pour cold water into an empty system when engine is very hot.
6	.....	*See "Cold Weather Operation", pages 14 and 15.*

FUEL SUPPLY

7	1,2	Fuel oil tank capacity is approximately 60 U.S. gallons. Gasoline tank capacity is approximately 1½ U.S. gallons.
8	1	Fill gasoline tank with clean gasoline. Open gasoline valve under gasoline tank.
9	2	Fill fuel tank with clean fuel oil. *(See Specifications on page 6).* Open fuel shut-off valve under tank.
10	2	Carefully strain gasoline and fuel oil through a cloth when filling the fuel tank. Be sure fuels are free from foreign substance. Do not use dirty fuel.
11	1,2	Fuel and Gasoline tanks have air vents in cap; keep vents open.

and grease of recognized manufacture.

ENGINE LUBRICATING OILS

Engine lubricating oil shall be of well refined oils, free from water sediment, acid, resin or any other substances not derived from petroleum. Oil shall not corrode any metal used in engine construction.

Be sure to use a mineral oil for lubricating the engine. Do not use top cylinder or valve oils.

S.A.E. NUMBERS OR VISCOSITY OF OIL RECOMMENDED

Air Temperatures	Engine Crankcase	Magneto and Coupling	Air Cleaner	Fuel Injection Pump
Summer Above 80° F.	SAE-30 or SAE-40	Very light Cream Separator or Sewing Machine Oil	SAE-30 or SAE-40	SAE-30 or SAE-40
Spring & Fall 80° to 32° F.	SAE-30	Very light Cream Separator or Sewing Machine Oil	SAE-30	SAE-30
Winter (Mild) 32° to 10° F.	SAE-30 or SAE-20W	Very light Cream Separator or Sewing Machine Oil*	SAE-30 or SAE-20W	SAE-30 or SAE-20W
Winter (Severe) 10°F. to Sub-Zero	SAE-20W or SAE-10W	Very light Cream Separator or Sewing Machine Oil*	SAE-20W or SAE-10W	SAE-20W or SAE-10W

* - *Use kerosene in Magneto Coupling during Cold Weather.*

See Special Instructions for Cold Weather Operation *on pages 14 and 15.*

CAUTION: SAE-10W can be used where sub-zero temperatures prevail over long periods. These light oils must not be used if temperatures rise above 10° F. or if the engine is to be operated under sustained heavy load, even in colder weather.

Diluting oil with kerosene is not recommended. Never check oil level while engine is running. For accurate check, wait until oil drains into crankcase pan, then check level.

APPROVED LUBRICANT FOR TRANSMISSION, SPROCKET DRIVE, TRACK ROLLERS, AND IDLERS, ETC.

Air Temperatures	Transmission Case	Sprocket Drive Gear Case	Track Rollers and Idlers
Continually above 90° F.	SAE-250	SAE-250	SAE-250
50° to 90° F.	SAE-140 or SAE-160	SAE-140 or SAE-160	SAE-140 or SAE-160
20° to 50° F.	SAE-90	SAE-90	SAE-90
Below 20° F.	4 parts SAE-90 1 part kerosene	4 parts SAE-90 1 part kerosene	4 parts SAE-90 1 part kerosene

Use a good grade mineral oil, free from solid materials.

LUBRICATOR FITTING GREASE (Hand Lubricator)

Use a pressure gun grease (chassis lubricant) for lubricator fittings - hand lubricator.

IMPORTANT - Keep the supply of lubricating oil and fuel absolutely clean and free from dust. Always use clean containers. Keep lubricator clean and wipe dust from grease fittings before applying lubricator.

FUEL OIL SPECIFICATIONS - Do not use dirty fuel.

Gravity (*minimum*) . . . . . 24° B.
Viscosity (Saybolt Universal) (at 100° F.) . . . . . Minimum 35 seconds / Maximum 100 seconds.
Sulphur (by weight) . . . . . Maximum 1.5%
Conradson Carbon. . . . . Maximum 1.0%
Flash Point . . . . . Minimum 150° F. or legal minimum.
Water and Sediment (by volume). . . . . Maximum .5%
Pour point. . .Must be lower than minimum temperature at which fuel oil is to be used.
Distillation test . . . . . .10% at 460° F. Maximum.
Distillation test . . . . . .95% at 675° F. Maximum.
Distillation test . . . . . End point 700° F. Maximum.

The supplier or distributor shall assume the responsibility of supplying a fuel oil of good ignition and burning qualities.

Do not use a lower grade of fuel than specified above.

The importance of using clean fuel oil cannot be over emphasized. Dirty fuel will cause rapid wear and clogging of fuel system, resulting in costly shut downs.

The specification of lubricants referred to are covered *on page 6*. For your own protection select only lubricating oils and grease of recognized manufacture.

Paragraph numbers refer to corresponding numbers on illustration.

DAILY LUBRICATION OR EVERY 10 HOURS OF OPERATION

1A. Track Idlers (4).
1B. Track Rollers (10).
1C. Front Idlers (2) (Button head type fittings).

Every 10 hours of operation. Use approved lubricant and with a bucket type lubricator fill with grease until an increased resistance is felt on lubricator lever which indicates sufficient lubrication.
NOTE: More frequent lubrication is necessary after seals become worn or when operating in water or excessive dust.

2A. Track Frame Pivots (2).
2B. Track Frame Diagonal Braces (2).
2C. Track Frame Guide Rollers (2).
2D Steering Clutch Levers (2)

Every 10 hours of operation. Use pressure gun grease (chassis lubricant) and apply 2 or 3 strokes with hand lubricator or sufficient grease to flush out old grease and dirt.

3. Air Cleaner Oil Cup.

Every 10 hours of operation clean and refill with same grade of oil as used in crankcase. *Refer to page 16 for full details on care of cleaner.*

4. Steering clutch release bearings (2)
5. Steering clutch release fork lower bearings (2). . . . . .
6. Steering clutch release fork upper bearings (2). . . . . .

Every 10 hours of operation. Use pressure gun grease (chassis lubricant). Two or three strokes of hand lubricator.

WEEKLY LUBRICATION OR EVERY 60 HOURS OF OPERATION

7A. Engine clutch compartment (drain plug). . . .
7B. Steering clutch compartment (drain plug) (2).

Drain every 60 hours of operation.

When operating in water, under very wet conditions, or under extreme dust conditions, where water or dust is apt to come in through holes in drain plugs on engine clutch compartment, or steering clutch compartment, these plugs should be removed and replaced with solid plugs which have no holes. Occasionally remove plugs to allow any oil accumulation to drain out.

8. Steering brake pedal shaft (2). . . . . *Every 60 hours of operation.* Use pressure gun grease (chassis lubricant). 2 or 3 strokes of hand lubricator.

9A. Engine clutch release bearing. . .
9B. Engine clutch pilot bearing. . . .
9C. Engine clutch coupling . . . . . .

Every 60 hours of operation. Use pressure gun grease (chassis lubricant). 2 or 3 complete strokes of hand lubricator. (Remove round plate on clutch compartment cover to get at fittings).

9D. Clutch Camshaft (3 grease fittings). . . . . .

Every 250 hours of operation, remove round plate on clutch compartment cover and turn engine crankshaft until fitting is opposite hole. Use pressure gun grease and apply 2 or 3 strokes of lubricator.

10. Steering clutch pilot bearings (2)

Every 60 hours of operation, use pressure gun grease (chassis lubricant). 10 to 20 strokes of hand lubricator. (Remove 2 round plates at rear of main frame to get at fittings). *Never use a fluid lubricant.*
CAUTION: Do not over-lubricate.

PERIODICAL LUBRICATION

11. Starting motor . . . . . .

Every 250 hours of operation -- 8 to 10 drops of light engine oil. *(See page 29).*

12. Transmission Oil filler, level plug and bayonet type gauge.
13. Transmission Drain Plug.

Capacity 7-1/2 U.S. gallons, Use approved lubricant and keep lubricant up to FULL level mark on bayonet gauge. Drain and refill transmission with new oil *once a season or when necessary.*
CAUTION: Check oil lever preferably after Trac-TracTor has stood idle for 5 hours.

14. Sprocket Drive Oil Filler and level plug in carrier plates.
15. Sprocket Drive Oil drain plugs in carrier plates (2).

Remove plugs (10) and if lubricant does not run out, fill with approved lubricant until oil flows out. Capacity 5 U.S. Quarts each side.
Drain and refill *once a season or when necessary.*

(Note:- For Lubricating the L.H. Track Frame, see the Side View of the R.H. Track Frame)

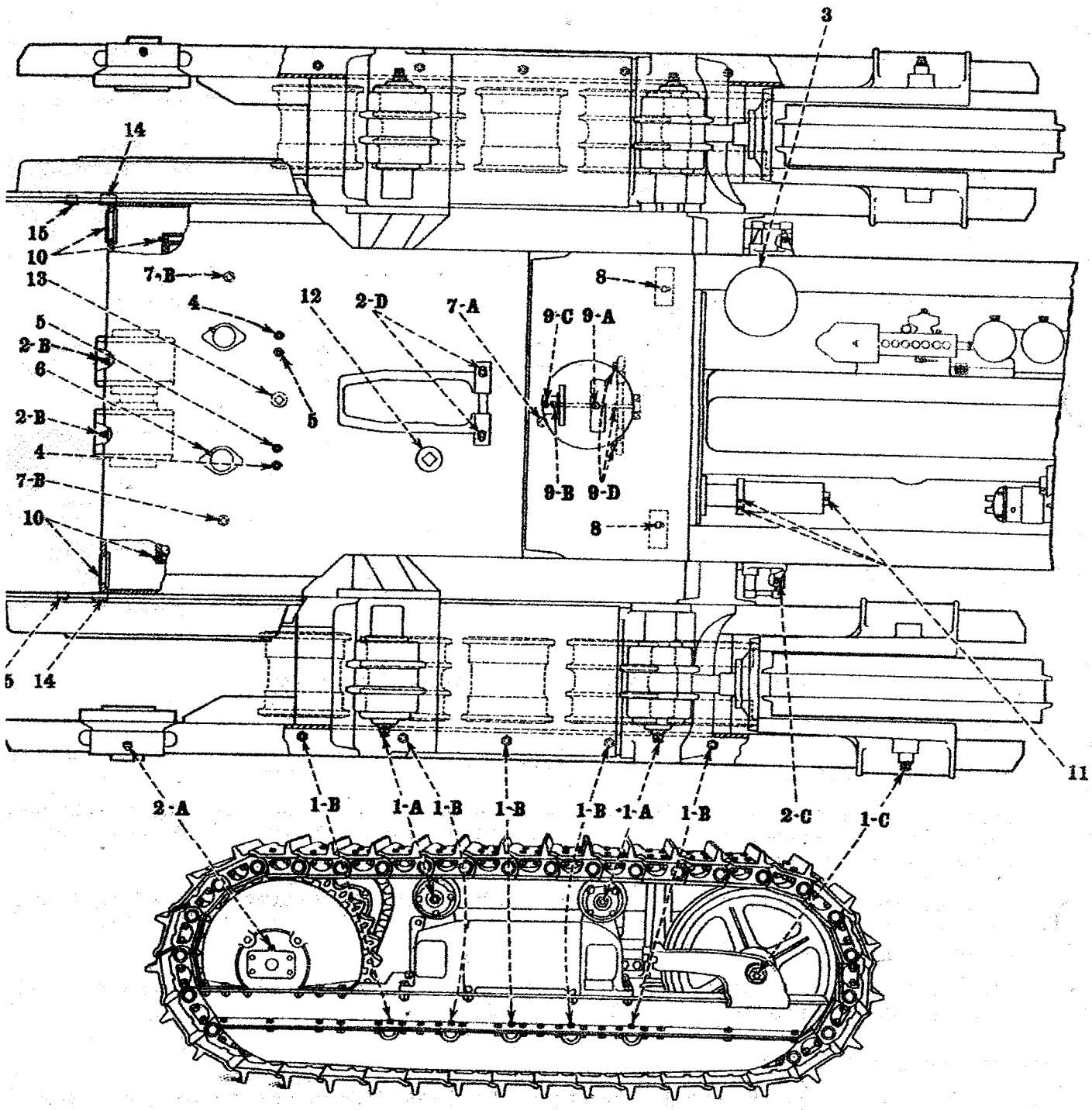

Note:- For Engine Lubrication, see page 2.

KEY TO LUBRICATION CHART - Continued

PERIODICAL LUBRICATION

7. Fan Hub Bearing.	*Every 60 hours of operation.* Use pressure gun grease (chassis lubricant) and apply two strokes of hand lubricator. *NOTE:* Lubricant oozing out of fan hub indicates excessive lubrication.
8. Impulse Coupling.	*Every 60 hours of operation* oil liberally with a light oil, such as cream separator or sewing machine oil. Use kerosene during extreme cold weather.
9. Front Engine Support.	*Every 60 hours of operation.* Use pressure gun grease (chassis lubricant) and apply 2 or 3 strokes of hand lubricator.
10. Generator.	*Every 60 hours of operation* - 8 to 10 drops of SAE No. 20 oil or equivalent.
11. Generator Drive Housing.	*Every 250 hours of operation.* Use pressure gun grease (chassis lubricant). Remove oil level plug "C" in generator drive housing; apply hand lubricator to fitting "D" and fill housing to level of plug opening, the replace plug.

NOTE: Generator housing oil level plug must be in horizontal position when checking oil level.

12. Magneto	*Every 500 to 1000 hours of operation.* A few drops of light oil, such as sewing machine or cream separator oil. *(See page 21 for complete information).*
ENGINE CONTROLS	*Occasionally,* apply a few drops of engine oil to engine control linkage, such as engine speed control, compression release, etc.

GENERAL ENGINE LUBRICATION

The engine has a full pressure feed lubrication system.

Drain the engine oil completely after every 100 hour run.

To drain oil, remove the drain plug located in the bottom of the crankcase pan. The oil strainer screen in oil filler cover should be removed occasionally and cleaned.

Pour engine oil into the crankcase pan through oil filler located in front of fuel injection pump and keep up to proper level. Use bayonet type gauge. *(See "Lubrication Chart").*

The engine should not be run at high speed or under load until the new oil has had ample time to reach all bearings.

OIL PRESSURE INDICATOR

The pointer in oil pressure indicator (unless defective) should register at all times when the engine is running. Should the indicator not register, it is an indication that the oil pump is not performing properly or the oil supply is low. The engine should be stopped immediately and the oil system inspected to find the cause of failure.

NOTE: Under all operating conditions, the oil pressure should hold the pointer on indicator in the white section.

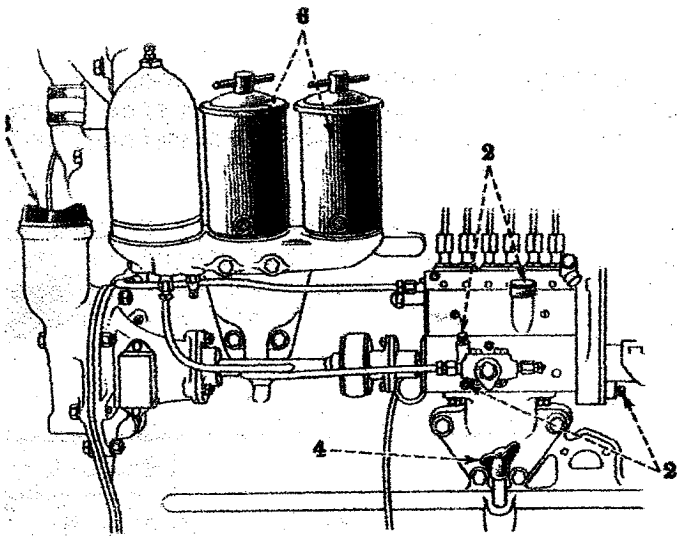

L. H. Slide of TD-18 Engine
Showing Points Requiring Lubrication

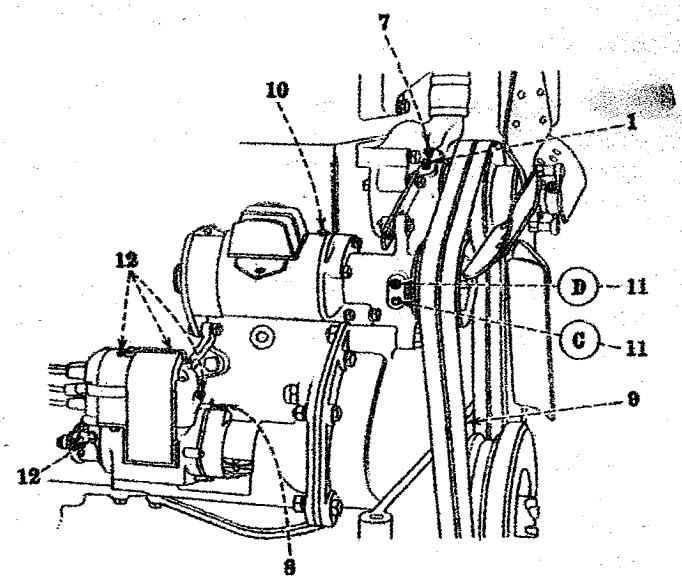

R. H. Slide of TD-18 Engine
Showing Points Requiring Lubrication

KEY TO LUBRICATION CHART

The specifications of lubricants referred to are covered *on page 6*. For your own protection select only oils and grease of recognized manufacture.

Paragraph numbers refer to corresponding numbers on illustrations.

DAILY LUBRICATION ON EVERY 10 HOURS OF OPERATION

1. **Water Pump Shaft.** (capped fitting).	*Every 10 hours of operation.* Use pressure gun grease (chassis lubricant) and apply not over 2 strokes of hand lubricator. Over lubrication will cause lubricant to be forced in the cooling system and may eventually clog the system.
2. **Bosch Pump.** Injection pump housing and Governor housing, oil filler, oil level gauge and drain plugs.	Check oil level *every 10 hours of operation* with bayonet gauge and add sufficient oil (same as used in engine crankcase) to FULL level mark on gauge. Pump housing is provided with an overflow pipe for maintaining correct oil level.

NOTE: Drain and refill pump with same oil as used in engine crankcase at same time crankcase oil is changed (every 100 hours of operation). To drain remove center pipe plug on injection pump housing and pipe plug in back of governor housing. Pump capacity 1/2 U.S. pint.

3. **Crankcase Oil Filler.** 4. **Oil Level Gauge.** 5. **Drain Plug.** 6. **Lubricating Oil Filter Element (2).**	*Every 10 hours of operation* check oil level with gauge (4) engine stopped - and add new oil *(refer to page 6 for oil specifications)* to bring oil up to "FULL" mark on gauge. *Every 100 hours of operation* while oil is hot, remove plug (5) and drain all oil. Refill with new oil to FULL mark on gauge (4). Capacity 22 U.S. quarts. Renew filter elements (6) at same time oil is changed. *Refer to page 18 for detailed information on filter.*

NOTE: Correct method of checking oil level is to remove gauge (4) by unscrewing wing nut, wipe gauge clean, reinsert until wing nut rests on sleeve; then remove and read.

Engine must be stopped when checking oil level. For accurate check, wait until oil drains into crankcase pan.

This TracTracTor is designed and built to give good performance and maximum service. Quality materials and good workmanship are employed throughout the entire unit.

The suggestions and requirements for operating outlined in this book are essential to maintain satisfactory performance and economical service. The care and daily attention given the TracTracTor will largely determine its maintenance cost and success of operation.

TracTracTor owners should use the extensive facilities offered by McCormick-Deering and International dealers when service is needed that requires the knowledge of an experienced service man. This is advisable as Dealers are kept informed on the best methods of servicing TracTracTors and are in a position to give satisfactory service.

INDEX

Description	Page No.
Air Vents at Injection Nozzles, Fuel Filter and Water Trap	8
Before Starting Engine	9
Cold Weather Operation	14,15
Diesel Operation	11
Engine Speed Control Hand Lever	11
Fuel Oil Specifications	6
Gear Shifting	12
Lubrication	2 to 6
Preparations for Starting	7,8
Starting the Engine	10
Starting the TracTracTor	11
Steering Brake Lock	13
Steering the TracTracTor	12,13
Stopping the Engine	13
Stopping the TracTracTor	13
MAINTENANCE	
Air Cleaner	16
Carburetor	20
Electrical Equipment	28 to 31
Engine	34,35
Engine Clutch	38
Engine Cooling System	32,33
Fuel Oil Filter	19
Gasoline Strainer	17
Injection Pump	36,37
Lubricating Oil Filters	18
Magneto	21 to 26
Spark Plugs and Cables	27
Steering Brakes	41
Steering Clutches	40
Suggestions for Checking Trouble	44
Track Assemblies	42,43
Transmission (Washing)	39
Valves	34
Water Trap	17

This book contains in addition to instructions for operating, instructions and illustrations pertaining to certain simple adjustments and replacements which can readily be made. However, the owner should consult the service dealer before attempting a general overhauling, or when any mechanical difficulties occur, as he has the necessary equipment for doing the work.

Avoid Accidents

Most accidents, whether they occur in industry, on the farm, at home, or on the highway, are caused by the failure of some individual to follow simple and fundamental safety rules or precautions. For this reason most accidents can be prevented by recognizing the real cause and doing something about it before the accident occurs.

Regardless of the care used in the design and construction of any type of equipment, there are many conditions that cannot be completely safeguarded against without interfering with reasonable accessibility and efficient operation.

A careful operator is the best insurance against an accident.

The complete observance of one simple rule would prevent many thousand serious injuries each year. That rule is: "Never attempt to clean, oil, or adjust a machine while it is in motion."

NATIONAL SAFETY COUNCIL

IMPORTANT

ORDERING REPAIR PARTS

When ordering repair parts, follow the instructions listed below. By doing this, you will be assured of receiving the correct part in the shortest period of time.

1—Give the TRACTRACTOR Serial Number.

2—Write the part number wanted exactly as shown in parts list.

3—All orders should be sent to the nearest IHC Dealer or IHC Branch House.

4—Give definite shipping instructions, that is: give railroad station and county, also whether shipment is to go by parcel post, express, freight or truck.

5—When ordering by telegraph, prepay, and give correct address.

So that you may have it before you, write both the TRACTRACTOR and Engine Serial numbers here:

TRACTRACTOR *Serial No.*_____
(Stamped on name plate on dash

*Engine No.*_____
(Stamped on side of Engine Crankcase)

Do not omit prefix or suffix letters appearing with numbers.

Instruction Manual

TRACTRACTOR

Model TD-18

(Diesel)

(Standard and Wide Tread)

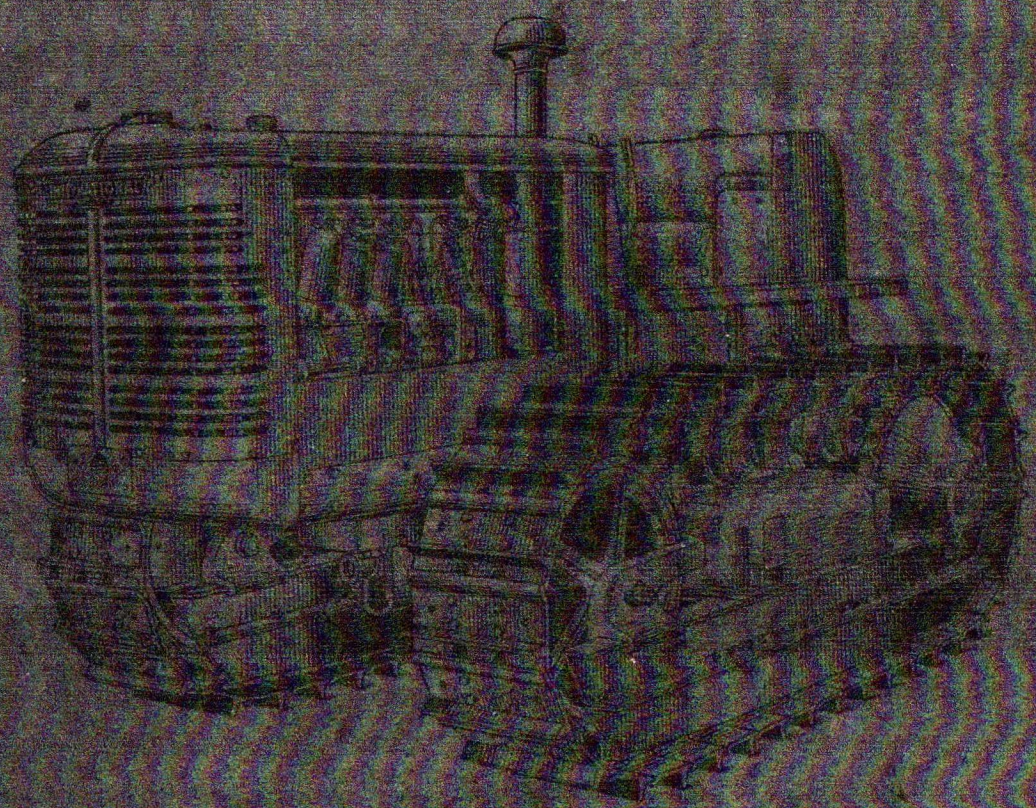

With "exploded" views and parts list.

Important

This book contains instructions for care and operating, and in addition, a parts list with detailed illustrations of the various units arranged so that parts wanted may readily be located.