TC-43B

INTERNATIONAL PARTS CATALOG

TD-18A CRAWLER TRACTOR

SERIAL No. 22,001 up

NTERNATIONAL HARVESTER COMPANY
0 North Michigan Avenue Chicago 1, Illinois, U.S.A.

The Importance of Adequate Parts and Service

The wise purchaser of a new machine gives consideration to the following factors:

1. *Original quality*
2. *Availability of service parts*
3. *Availability of adequate service facilities*

In many cases the machine becomes the only means of performing certain tasks that must be done in a limited period of time. Wear and even breakage of parts are to be expected due to operating conditions. However, the user can still be assured of getting his work done on time if service parts and adequate service facilities are available.

Foresighted International Industrial Power distributors and dealers make every effort to provide good service and maintain a completely adequate stock of service parts.

When in need of parts, always give the International Industrial Power distributor or dealer your chassis and engine serial numbers. We suggest that you write these serial numbers in the spaces provided below, for ready reference when parts are required.

*Chassis Serial No.*_____
(Stamped on plate on dash)

*Engine Serial No.*_____
(Stamped on left-hand side of engine crankcase)

INTRODUCTION

This catalog contains a complete list of parts for the TD-18A Crawler Tractor. The TD-18A Crawler Tractor has a six-cylinder 4¾ x 6½-inch diesel engine.

This catalog supersedes TC-43A, which should be destroyed.

The parts in this catalog are grouped according to their location in the tractor. Each group is preceded by an "exploded view" which illustrates clearly each part in its correct relation to the other parts in the illustration.

Following is a brief summary of the simplified system used in compiling this catalog. It is to your benefit to study this summary carefully:

(1) Parts Numbers. In cases where the part number suffix letters have been advanced, the new part will replace the old unless otherwise indicated. For example: Valve housing cover 5020-DB will work for 5020-D and DA. Where the R suffix is used, R2 will work for R1.

(2) Illustrations. The "exploded views" of each unit show the individual parts clearly and in their normal relationship to one another. This method of illustrating makes it easy to locate parts, whether they are ordered by description or by part numbers. Also, the "exploded view" illustrations can be used as a guide when servicing the tractor. Reference numbers only are shown in each illustration. These numbers correspond to those in the reference number column in the list of parts which follows each "exploded view."

(3) Method of Listing. The parts list is divided into groups corresponding to units in the tractor. Parts are listed in order by reference number of illustration, followed by a full description, serial number, and quantity required per tractor. All parts for which no serial number is shown are used in the first tractor having serial number 22001 and are still current.

(4) Partial Assemblies and Complete Assemblies. You will find that some of the numbers are followed by the letter "X" or "Y." The suffix letter "X" indicates an assembly of parts which may be either a partial or a complete assembly. The suffix letter "Y," in nearly all cases, indicates a complete assembly.

You will also find some numbers are followed by the suffix R11 (one, one) through R89 (eight, nine) and R91 (nine, one) through R99 (nine, nine). The suffix R11 indicates an assembly of parts which may be either a partial or a complete assembly (comparable to the above system using "X"). The suffix R91 in nearly all cases indicates a complete assembly (comparable to the above system, using "Y"). For example: *251 650 R11 Float* is a partial assembly; however, it is necessary to issue a new part number, 251 652 R91, which represents the foregoing *with added parts,* and is a complete assembly.

Component parts of assemblies are listed following the assembly itself, excepting those made up of less than four parts which are fully covered by description.

In cases where the individual parts of an assembly are not available for service, those parts are marked with the symbol §. In some instances, such individual parts are shown in the "Unit Lists" with a notation giving the part number which is to be used when ordering. For example: "251 651 R1 Float Lever (order 251 652 R91)."

(5) Index. On pages 4 and 5 you will find an alphabetical index, which is divided into four classifications: Engine, Electrical System, Chassis, and Attachments. This index should be used to locate unit lists and illustrations. A numerical index in the back of the catalog contains a complete list of parts, showing the page numbers where each part is listed and described.

(6) Miscellaneous Parts. Parts — such as standard bolts, screws, nuts, etc.—are indented and listed under the respective individual parts with which they are used. They should be ordered by number, description and size, as they are not component parts of the pieces they attach.

(7) Serial Numbers. Engine serial numbers for TD-18 start with TDRM-22001 to 22593 and TD-18A start with TDRM-22594 up and are stamped on a pad on the left side of the engine crankcase. Chassis or crawler tractor serial numbers for TD-18 start with TDR-22001 to 22535 and TD-18A start with TDR-22536 up and are stamped on the name plate on the dash. No attempt is made at the factory to have the engine and chassis serial numbers correspond. For serial numbers 501 to 22000 for TD-18 see parts catalog TC-22C.

Customers should supply engine and crawler tractor chassis serial numbers—including all prefix and suffix letters—when ordering parts. A serial number suffix letter code has been assigned to identify parts which replace standard parts or units when crawler tractors have special features which differ from standard equipment. Full details concerning the suffix letter code can be found on page 209.

(8) Prices. Parts prices will be found in the CH-219 tractor and engine price list, which is issued separately and includes both current and obsolete parts.

INSTRUCTIONS FOR ORDERING PARTS

(a) All parts orders should be sent to the control district office or parts depot when so instructed. Give complete address, state the county and railroad station (when shipping point is different than post office), also whether shipment is to go by parcel post, express, truck, or freight.

(b) When ordering parts, give the I H part number, including suffix or prefix letters. To facilitate identification of these parts, "Serial Numbers" assigned to machines, if any, should be furnished.

(c) Parts should be ordered on the standard parts order blank. The parts should be arranged in sequence by part numbers to facilitate service or orders at the control district office or parts depot.

(d) Claims for shortage or error in the handling of an order for parts must be made upon receipt of goods.

(e) Symbols classifying parts are not included in this catalog. They appear in the CH-219 price list.

It is the policy of International Harvester Company to improve its products whenever it is possible and practical to do so.

We reserve the right to make changes or add improvements in the design or construction of parts at any time without incurring the obligation to install such changes on Crawler Tractors previously delivered.

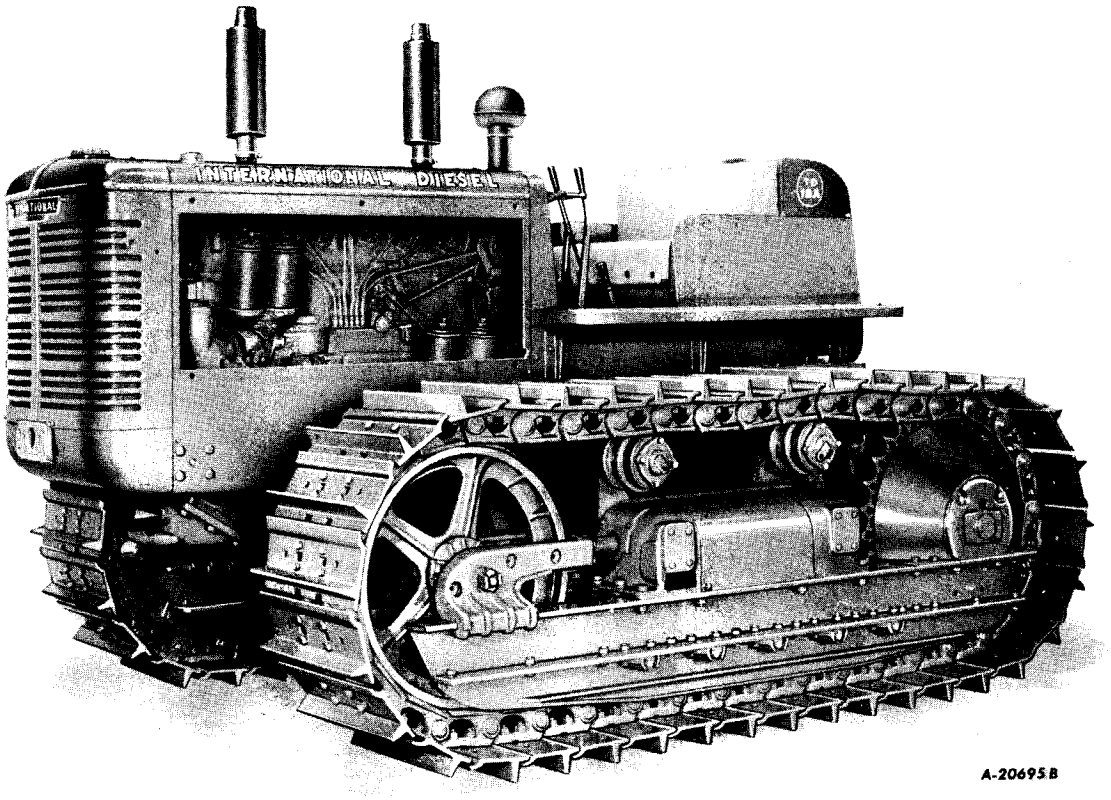

International TD-18A Crawler Tractor equipped with exhaust mufflers, crankcase guard and front pull hook.

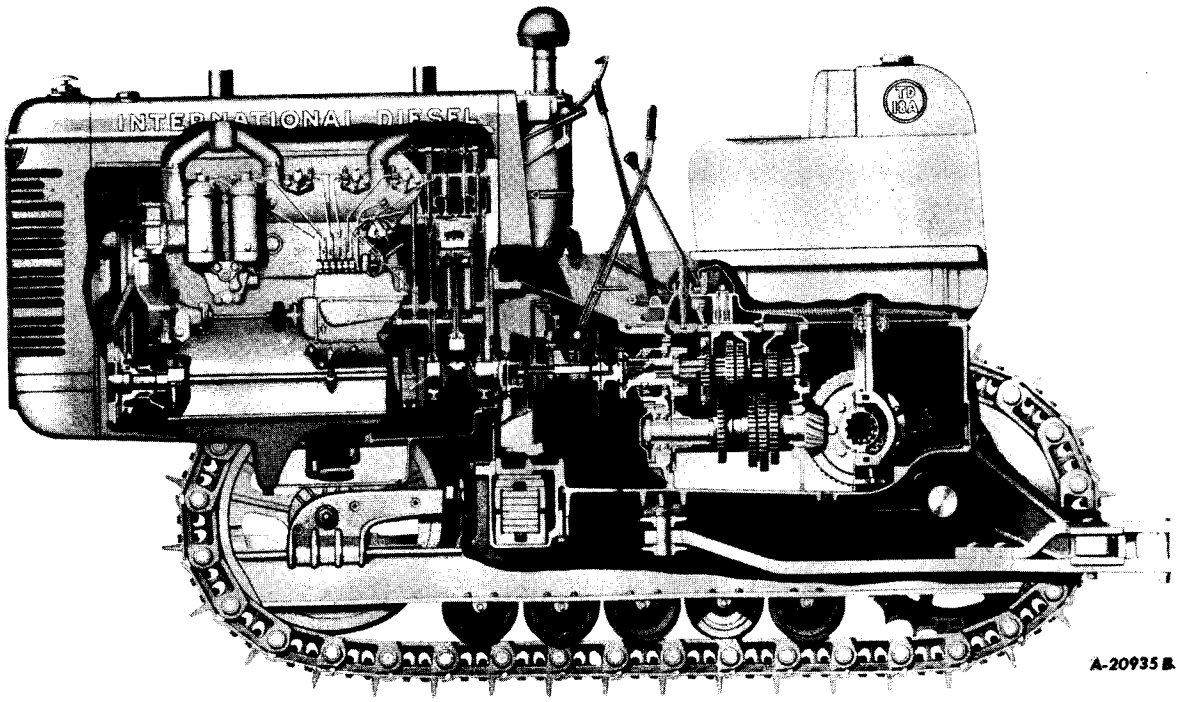

Cutaway view of the International TD-18A Crawler Tractor.

INDEX TO UNITS

Description	List Page	Illust. Page
ENGINE—DIESEL		
Camshaft and related parts	13	12
Carburetor—starting diesel	33	33
Connecting rods	18	18
Crankcase	13	12
Crankcase oil pan	23	23
Crankshaft and related parts	18	18
Cylinder head	7	7
Cylinder sleeves	18	18
Decal service package	162	.....
Drive pulley	18	18
Engine water outlet header	30	30
Engine supports	13	12
Exhaust pipes	32	.....
Fan	27	26
Fan and water pump pulley	27	26
Filters—fuel (single)	41	40
fuel (dual)	43	42
Front cover	13	12
Fuel injection pipes and nozzles	47	46
Fuel injection pump (IH twin plunger)	53	.....
Fuel injection pump drive	47	46
Gaskets—package assorted	160	.....
Governor control	38	38
Idler pulley	27	26
Improvement packages	163	.....
Injection pump breather	32	31
Lubricating oil filter (full flow)	57	56
(not full flow)	55	54
Lubricating oil pump	23	23
Manifolds	31, 32	31
Overhaul and improvement packages	163	.....
Pistons	18	18
Pulleys—drive	18	18
fan	27	26
idler	27	26
water pump	27	26
Service meter	58	58
Sleeves	18	18
Starting crank	18	18
Starting mechanism	38	38
Starting valve mechanism	7	7
Thermostats	30	30
Valves	7	7
Valve housing	7	7
Vibration damper	18	18
Water pump	27	26
Water pump pulley	27	26
Water trap	45	44

Description	List Page	Illust. Page
ELECTRICAL SYSTEM		
Batteries and mounting	71	70
Electric lighting (special)	79	78
Generator (Delco-Remy)	59, 71, 79	59, 70, 78
Headlights and rear lights (special)	74	74
Lighting switch (Delco-Remy)	73	73
Magneto—International Model F-6	65	64
Magneto drive and bracket	62	62
Spark plugs and cables	59	59
Starting motor (Delco-Remy)	59, 71, 79	59, 70, 78
Starting switch	71	70
Tail light	77	77
Wiring diagrams		
Lighting (Delco-Remy) (special)	79	78
Starting	71	70
CHASSIS		
Air cleaner and connections	100	100
Brake pedals	97	97
Clutch control and connections	83	82
Clutch—engine over-center	84	82
steering	115	114
Dash and cowl	97	97
Drawbar	147	147
Drive bevel gear	113	113
Engine over-center clutch	84	82
Engine control levers	97	97
Equalizer spring	144	144
Fenders	148	148
Final Drive		
Drive bevel gear	113	113
Steering brakes and controls	121	121
Steering clutch	115	114
Steering clutch controls	119	118
Steering clutch release shaft and mechanism	115	114
Fuel tanks	103	102
Front idler	132	132
Gaskets—package assorted	161	.....
Gasoline strainer	105	102
Gear shifter mechanism	107	106
Hood and side sheets	96	96

INDEX TO UNITS

Description	List Page	Illust. Page
CHASSIS—Continued		
Improvement packages	163	.....
Instruments and panel	97	97
Lubricator—hand	157	157
bucket	151, 155	150, 154
Main frame and covers	89	88
Main frame side channels	90	90
Overhaul and improvement packages	163	.....
Package assorted gaskets	161	.....
Radiator and connections	93	92
Seat and fenders	148	148
Sprocket, drive, pinion and shaft	125	124
Steering brakes and controls	121	121
Steering clutch	115	114
Steering clutch controls	119	118
Steering clutch release shaft and mechanism	115	114
Tools	158	158
Track assembly		
Front idler	132	132
Track chain	135	135
Track frame	128	128
Track frame diagonal brace	130	130
Track frame guide	90	90
Track frame guide rollers	90	90
Track frame guide roller brackets	90	90
Track frame pivot shaft	125	124
Track idler	136	136
Track rollers	138	138
Track shoes	143	142
Track spring	128	128
Track drive		
Sprocket	125	124
Sprocket drive, pinion and shaft	125	124
Track frame pivot shaft	125	124
Transmission	109	106
ATTACHMENTS—Special		
Air cleaner pipe extension	173	173
Belt pulley	175	174
Bi-Metallic engine clutch driven member attachment	84	82
Bi-Metallic steering clutch friction disc attachment	115	114
Blower fan	29	.....
Crankcase guard	166	166
Cutaway sprocket	127	.....
Exhaust muffler and extension	168	168
Extended track frame	192	192
Forest shield	183	182
Front bumper	178	178
Front idler (large diameter)	191	191
Front idler shield	198	198
Front power take-off coupling	180	180
Front pull hook	166	166
Front pull hook—swivel type	166	166
Headlight brush guard	181	181
Heavy-duty track roller shield	197	196
Hood side doors	184	184
Service Meter	50	50
Large-diameter front idler	191	191
Low boiling point thermostat and heat indicator	99	.....
Muffler	.....	.....
Odometer	186	186
Power take-off—front coupling	180	180
rear	199	199
rear (reduced speed)	201	200
Pre-cleaner	185	185
Radiator guard	178	178
Radiator shutter	188	188
Reduced speed power take-off, rear	185	185
Rigid track frame	194	194
Shields—forest	183	182
front idler	198	198
track roller (heavy-duty)	197	196
Spark arrester	169	169
Sprocket—cutaway	127	.....
Sprocket rock deflector	190	190
Starting primer	171	170
Thermostat (Low boiling point thermostat and heat indicator)	99	.....
Track roller shield (heavy-duty)	197	196
EQUIPMENT COMBINATIONS		
Tractor crane (TD-18A—100-O)	198	.....
Pipe boom (TD-18A—500-O)	207	.....

NUMERICAL INDEX ..... page 213

SUFFIX LETTER CODE ..... page 209

MEMORANDA

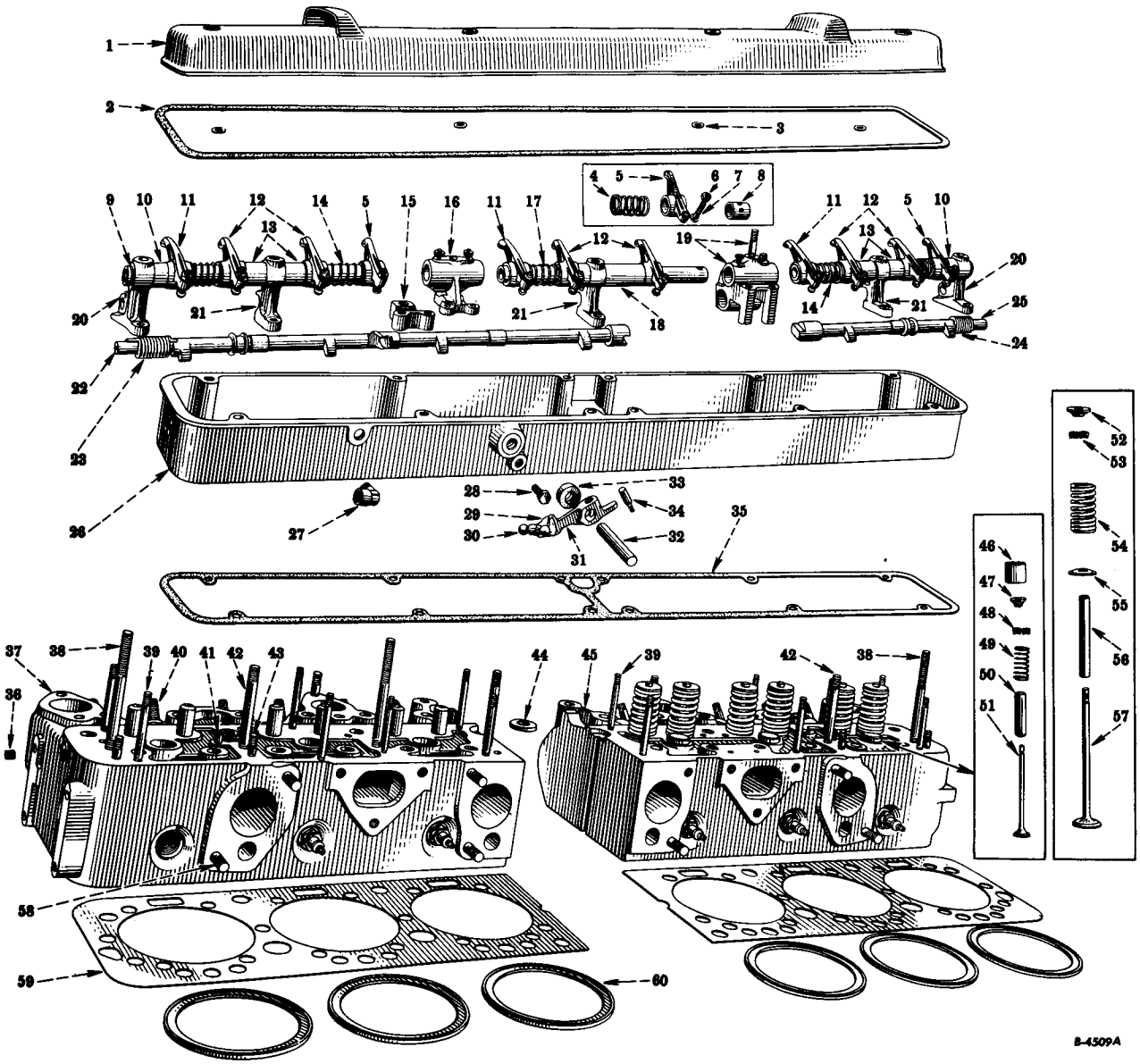

Reference numbers only are shown in illustration. Use I H part numbers in ordering.
Unnumbered parts in the illustrations are the same as corresponding parts shown with numbers.

REF. NO.	PART NUMBER	DESCRIPTION	SERIAL NUMBER	NO. REQ'D.
		CYLINDER HEAD, VALVE HOUSING, VALVES AND STARTING VALVE MECHANISM		
	258 431 R91	Engine, Complete (Diesel Engine is complete from Flywheel to Fan)		1
1	5 020 DB	Valve Housing Cover		1
	103 028	Hex. Nut, 1/2" N.F.		4
2	32 458 DA	Valve Housing Cover Gasket		1
3	32 459 D	Valve Housing Cover Nut Washer		4

REF. NO.	PART NUMBER	DESCRIPTION	SERIAL NUMBER	NO. REQ'D
		CYLINDER HEAD, VALVE HOUSING, VALVES AND STARTING VALVE MECHANISM—Continued		
4	24 961 D	Valve Lever Spring		6
5	251 124 R12	Exhaust Valve Lever, R.H., Complete		3
		(Composed of:		
		1 Bushing 24 965 DB		
		1 Nut 38 763 H		
		1 Screw 250 575 R2		
		1 Lever §251 124 R2)		
6	38 763 H	Valve Lever Adjusting Screw Nut		12
7	250 575 R2	Valve Lever Adjusting Screw		12
8	24 965 D	Valve Lever Bushing		12
9	27 141 D	Valve Lever Snap Ring		2
10	24 962 D	Valve Lever Spacer, Outer and Rear Center		3
11	251 123 R12	Exhaust Valve Lever, L.H., Complete		3
		(Composed of:		
		1 Bushing 24 965 DB		
		1 Nut 38 763 H		
		1 Screw 250 575 R2		
		1 Lever §251 123 R2)		
12	251 122 R12	Intake Valve Lever, Complete		6
		(Composed of:		
		1 Bushing 24 965 DB		
		1 Nut 38 763 H		
		1 Screw 250 575 R2		
		1 Lever §251 122 R2)		
13	24 964 D	Valve Lever Spacer, Intermediate		4
14	27 140 DDX	Valve Lever Shaft, Front and Rear with Ring, 27 141 D		2
	172 531	Plug, 3/4"		2
15	251 212 R1	Valve Lever Rear Center Bracket, Lower Half		1
16	251 213 R2	Valve Lever Rear Center Bracket, Upper Half		1
	179 847	Cap Screw, 3/8 x 2" N.C. Hex Head		2
	102 720	Set Screw, 5/16 x 3/4", Headless (Cup Point)		2
	103 028	Hex Nut, 1/2" N.F.		1
	218 437	Hex Jam Nut, 5/16" N.C.		2
	103 321	Lock Washer, 3/8"		2
17	251 199 R1	Valve Lever Shaft Center		1
18	32 465 D	Valve Lever Spacer, Front Center		1
19	5 029 DX	Valve Lever Front Center Bracket with Stud, 32 463 D		1
	179 851	Cap Screw, 3/8 x 3/4" N.C. Hex Head		4
	102 720	Set Screw, 5/16 x 3/4" N.C. Headless (Cup Point)		2
	218 437	Hex Nut, 5/16" N.C.		2
	103 321	Lock Washer, 3/8"		4
20	5 027 DB	Valve Lever End Bracket		2
	103 026	Hex Nut, 3/8" N.F.		2
	103 028	Hex Nut, 1/2" N.F.		2
	103 321	Lock Washer, 3/8"		2
21	5 028 D	Valve Lever Intermediate Bracket		3
	103 026	Hex Nut, 3/8" N.F.		3
	103 028	Hex Nut, 1/2" N.F.		3
	103 321	Lock Washer, 3/8"		3

§ - Not Supplied Separately.

REF. NO.	PART NUMBER	DESCRIPTION	SERIAL NUMBER	NO. REQ'D
		CYLINDER HEAD, VALVE HOUSING, VALVES AND STARTING VALVE MECHANISM—Continued		
22	260 977 R91	Starting Valve Shaft, 251 215 R13 and Lever, 260 946 R1		
		(Will Work for 251 215 R12)	TDRM 22001 to 24752	1
22	251 215 R13	Starting Valve Shaft Rear	TDRM 24753 Up	1
23	46 212 D	Starting Valve Shaft Spring, Rear		1
24	46 213 D	Starting Valve Shaft Spring, Front		1
25	251 214 R1	Starting Valve Shaft, Front		1
26	260 978 R91	Valve Housing Service Package (Consists of Housing,		
		251 218 R21 and Shaft, 260 977 R91)		
		(Will Work for 251 218 R11)	TDRM 22001 to 24752	1
26	251 218 R11	Valve Housing with Oil Seal, 42 746 D		
		(Order 260 978 R91)	TDRM 22001 to 24752	1
	103 025	Hex Nut, 5/16" N.F.		1
	103 026	Hex Nut, 3/8" N.F.		12
26	251 218 R21	Valve Housing with Oil Seal, 42 746 D	TDRM 24753 Up	1
27	57 068 DX	Cylinder Head Breather Pipe Elbow with Nut, 37 165 D		1
28	50 674 D	Starting Valve Operating Lever Stop	TDRM 22001 to 24752	1
	103 321	Lock Washer, 3/8"		1
29	68 251 D	Starting Valve Shaft Push Rod Lockwire	TDRM 22001 to 24752	1
30	50 678 D	Starting Valve Shaft Push Rod	TDRM 22001 to 24752	1
31	50 673 D	Starting Valve Operating Shaft Lever	TDRM 22001 to 24752	1
31	260 946 R1	Starting Valve Operating Shaft Lever	TDRM 24753 Up	1
32	50 672 D	Starting Valve Operating Shaft		1
33	42 746 D	Oil Seal		1
34	42 739 DA	Starting Valve Operating Shaft Pin		1
	103 024	Hex Nut, 1/4"		1
	114 604	Lock Washer, 1/4"		1
35	32 457 DB	Valve Housing Gasket		1
36	50 410 DA	Oil Header Plug		1
37	259 891 R21	Cylinder Head, Rear, with Studs and Valve Guides, Complete		
		(Will Work for 251 138 R11 together with Gasket,		
		259 893 R1)	TDRM 22001 Up	1
		(Composed of:		
		6 Stud 32 444 D		
		3 Stud 32 445 D		
		2 Stud 32 447 DA		
		2 Stud 32 448 D		
		1 Plug 50 410 DA		
		1 Stud 50 664 D		
		1 Pin 50 668 D		
		8 Stud 250 450 R1		
		6 Stud 251 064 R1		
		3 Guide 251 103 R1		
		6 Guide 259 921 R1		
		4 Plug 257 695 R1		
		1 Head §259 891 R2		
		3 Plug 143 997)		
38	32 447 DA	Valve Lever Bracket Stud, Short		3
	103 028	Hex Nut, 1/2" N.F.		3
39	32 444 D	Valve Housing Stud		12
	103 026	Hex Nut, 3/8" N.F.		12

§ Not Supplied Separately.

REF. NO.	PART NUMBER	DESCRIPTION	SERIAL NUMBER	NO. REQ'D
		CYLINDER HEAD, VALVE HOUSING, VALVES AND STARTING VALVE MECHANISM—Continued		
40	251 064 R1	Injection Nozzle Stud		12
41	50 664 D	Valve Housing Stud, Short		1
42	32 448 D	Valve Lever Intermediate Bracket Stud		3
	103 028	Hex Nut, 1/2" N.F.		3
43	32 445 D	Valve Lever Bracket Stud, Short		5
	103 026	Hex Nut, 3/8" N.F.		5
	103 321	Lock Washer, 3/8"		5
44	32 455 D	Cylinder Head Center Stud Washer		1
45	259 890 R21	Cylinder Head, Front with Studs and Valve Guides, Complete		
		(Will Work for 251 137 R11 together with Gasket,		
		259 893 R1)	TDRM 22001 Up	1
		(Composed of:		
		6 Stud 32 444 D		
		2 Stud 32 445 D		
		1 Stud 32 447 DA		
		1 Stud 32 448 D		
		1 Pin 50 668 D		
		8 Stud 250 450 R1		
		6 Stud 251 064 R1		
		3 Guide 251 103 R1		
		6 Guide 259 921 R1		
		1 Head §259 890 R2		
		4 Plug 257 695 R1		
		3 Plug 143 997)		
46	250 535 R1	Starting Valve Spring Cover		6
47	46 208 D	Starting Valve Spring Seat		6
48	46 209 D	Starting Valve Spring Collar Key		12
49	46 211 D	Starting Valve Spring		6
50	251 103 R1	Starting Valve Guide (Will Work for 251 065 R1)		6
51	251 074 R1	Starting Valve		6
52	42 748 DA	Exhaust and Intake Valve Spring Upper Seat		12
53	32 485 D	Exhaust and Intake Valve Spring Collar Key		24
54	61 808 D	Exhaust and Intake Valve Spring		12
55	18 746 DA	Exhaust and Intake Valve Spring Lower Seat		12
56	251 078 R1	Exhaust and Intake Valve Guide		
		(Will Work for 251 063 R1)	TDRM 22001 to 23543	12
56	259 921 R1	Exhaust and Intake Valve Guide	TDRM 23544 Up	12
57	42 747 DB	Intake Valve		6
57	32 482 DE	Exhaust Valve		6
58	250 450 R1	Manifold Stud		16
59	42 763 DB	Cylinder Head Gasket	TDRM 22001 to 23543	2
59	259 893 R1	Cylinder Head Gasket	TDRM 23544 Up	2
60	25 090 DD	Cylinder Head Gasket Ring		6
60	67 228 D	Set of Cylinder Head Gasket Rings		
		(Consisting of Six Pieces, 25 090 DD)		1

§ - Not Supplied Separately.

REF. NO.	PART NUMBER	DESCRIPTION	SERIAL NUMBER	NO. REQ'D
		CYLINDER HEAD, VALVE HOUSING, VALVES AND STARTING VALVE MECHANISM—Continued		
	31 121 D	Nozzle Body Stud Nut		12
	32 454 D	Cylinder Head Stud Nut (Front)		15
	32 454 D	Cylinder Head Stud Nut (Rear)		16
	126 045	Pipe Plug, 1/4" Countersunk		6
	32 463 D	Valve Lever Front Center Bracket Stud		1
	37 165 D	Coupling Nut		2
	37 323 DX	Cylinder Head Breather Tube Elbow, Front, with Nut, 37 165 D		1
	50 607 DX	Cylinder Head Breather Tube Elbow, Rear, with Nut, 37 165 D		1
	50 668 D	Starting Valve Shaft Locating Pin		2
	251 691 R11	Cylinder Head Breather Tube with 2 Coupling Nuts, 37 165 D		1
	254 224 R1	Lifting Eye (Special)		1
	257 695 R1	Cylinder Head Expansion Plug, 1-7/8"		8
	258 344 R1	Cylinder Head Stud Spacer		2
	143 997	Cylinder Head Plug		6

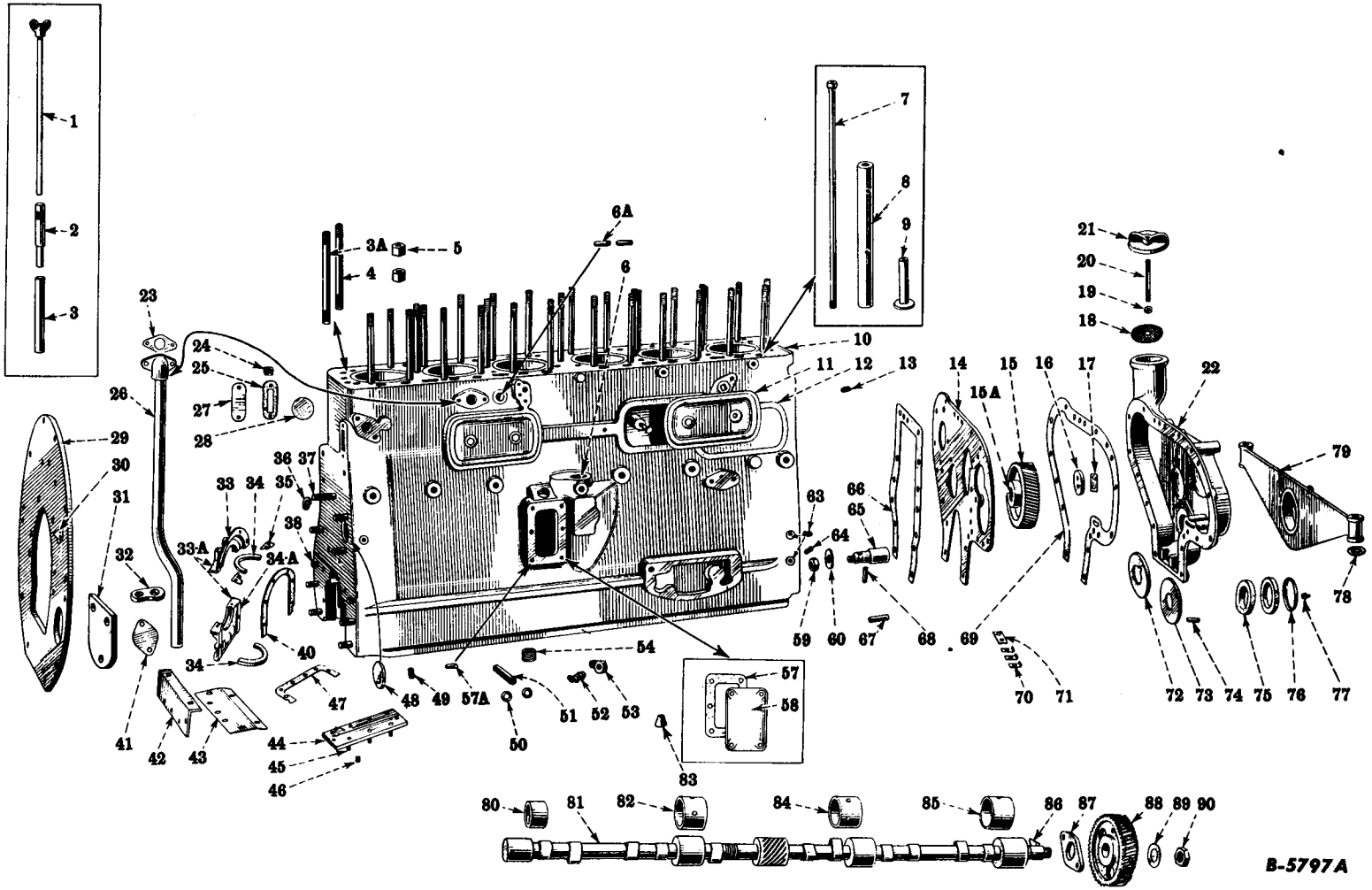

CRANKCASE, FRONT COVER, FRONT AND REAR ENGINE SUPPORTS, CAMSHAFT AND RELATED PARTS

Reference numbers only are shown in illustration. Use I H part numbers in ordering.
Unnumbered parts in the illustrations are the same as corresponding parts shown with numbers.

DIESEL ENGINE

REF. NO.	PART NUMBER	DESCRIPTION	SERIAL NUMBER	NO. REQ'D
		CRANKCASE, FRONT COVER, FRONT AND REAR ENGINE SUPPORTS, CAMSHAFT AND RELATED PARTS		
1	262 037 R11	Oil Level Gauge with Wing Nut (Will Work for 251 395 R11)		1
2	48 262 D	Lubricating Oil Level Gauge Sleeve		1
3	51 203 DA	Oil Level Gauge Pipe		1
3A	39 810 D	Cylinder Head Stud, Long		29
3A	254 225 R1	Cylinder Head Stud, Long		2
4	39 810 D	Cylinder Head Stud		29
5	32 454 D	Cylinder Head Stud Nut		31
6	13 001 D	Crankcase Distributor Hole Expansion Plug, 1-5/8"		1
6	29 565 D	Crankcase Distributor Hole Expansion Plug, 1-7/8"		1
6A	50 827 D	Cross Shaft Bushing		2
7	32 486 DBX	Valve Push Rod with Ends		12
8	4 988 D	Valve Tappet Guide		12
9	25 043 DB	Valve Tappet		12
10	255 631 R31	Crankcase, Complete (Will Work for 254 475 R31)		1
		(Composed of:		
		1 Cap (Order 256 847 R3) (See Note)	§6 551 DC	
		4 Cap (Order 256 845 R3) (See Note)	§6 552 DC	
		1 Cap (Order 256 848 R1) (See Note)	§6 553 DBXA	
		1 Cap (Order 256 846 R3) (See Note)	§6 554 DC	
		2 Dowel	25 086 DA	
		2 Dowel	25 087 D	
		4 Plug	30 397 D	
		1 Bearing (Order 32 280 DCR)	§32 280 DC	
		1 Bearing (Order 32 281 DBR)	§32 281 DB	
		1 Bearing (Order 32 282 DCR)	§32 282 DC	
		1 Bearing (Order 32 283 DBR)	§32 283 DB	
		1 Plug	38 028 DM	
		16 Washer	39 422 D	
		16 Nut	39 423 D	
		29 Stud	39 810 D	
		11 Stud	49 952 D	
		1 Sleeve	48 262 D	
		4 Plug	50 410 DA	
		5 Plug	50 474 DA	
		1 Pin	50 826 D	
		2 Bushing	50 827 D	
		1 Stud	53 643 D	
		1 Plug	103 866	
		1 Plug	103 868	
		2 Cork	104 942	
		16 Pin	108 641	
		1 Lock Washer	115 548	
		1 Plug	172 570	
		3 Plug	172 574	
		1 Plug	172 580	
		1 Plug	172 598	
		1 Screw	179 814	
		1 Stud	251 283 R1	
		2 Stud	254 225 R1	
		1 Crankcase	§255 631 R2	
		16 Stud	256 833 R1)	

§ - Not Supplied Separately.

NOTE: Orders should be placed with the Service Section, International Harvester Company, Melrose Park, Illinois. Orders should be marked "Machining facilities are available."

REF. NO.	PART NUMBER	DESCRIPTION	SERIAL NUMBER	NO. REQ'D
		CRANKCASE, FRONT COVER, FRONT AND REAR ENGINE SUPPORTS, CAMSHAFT AND RELATED PARTS—Continued		
11	39 756 D	Push Rod Chamber Side Plate		2
	179 838	Cap Screw, 3/8 x 7/8" N.C. Hex. Head		4
12	39 757 DC	Push Rod Chamber Side Plate Gasket		2
13	30 397 D	Crankcase Oil Header Pipe Plug		4
14	32 367 DAX	Crankcase Front Plate with Ferrule		1
	179 881	Cap Screw, 1/2 x 1" N.C. Hex. Head		5
15	25 140 DDX	Idler Gear (64 Teeth) with Bushing, 25 139 DCR		1
15A	25 139 DCR	Idler Gear Bushing		1
16	25 131 D	Idler Gear Thrust Washer		1
	181 366	Cap Screw, 5/16 x 3/4" N.F. Hex. Head		1
17	25 130 D	Idler Gear Thrust Washer Cap Screw Lock		1
18	1 242 DB	Lubricating Oil Filler Strainer		1
19	220 066	Follows Reference No. 20		
20	28 940 DA	Crankcase Oil Filler Stud		1
	220 066	Hex. Nut, 3/8" N.C.		1
21	3 713 DA	Lubricating Oil Filler Cap		1
22	5 976 DAX	Crankcase Front Cover, Complete		1
		(Composed of:		
		1 Strainer 1 242 DB		
		1 Stud 25 954 D		
		1 Stud 28 940 DA		
		1 Deflector 36 797 D		
		2 Felt 36 798 D		
		1 Retainer 36 799 D		
		1 Nut 220 066		
		1 Cover §5 976 DA)		
	179 887	Cap Screw, 1/2 x 1-3/4" N.C. Hex. Head		9
	103 323	Lock Washer, 1/2"		9
23	25 121 DC	Breather Pipe Flange Gasket		1
24	103 875	Pipe Plug, 3/4" Countersunk Head		2
25	39 764 DB	Push Rod Chamber Rear Plate Gasket		1
26	55 307 DAX	Breather Pipe with Flange		1
	179 841	Cap Screw, 3/8 x 1-1/4" N.C. Hex. Head		2
	103 321	Lock Washer, 3/8"		2
27	39 763 D	Push Rod Chamber Rear Plate		1
	179 838	Cap Screw, 3/8 x 7/8" N.C. Hex. Head		2
	103 321	Lock Washer, 3/8"		2
28	13 062 D	Crankcase Water Jacket Expansion Plug, 1-1/2"		3
29	42 707 DBRX	Rear Engine Support with Indicator, 42 708 D and Bolt,		
		259 894 R1		1
30	42 708 D	Timing Indicator		1
	104 237	Rivet, 3/16 x 3/4" Flat Head		2
31	47 801 D	Starting Motor Mounting Opening Cover		
		(For Tractors Without Electric Starting)		1
	16 069 R1	Cap Screw, 1/2 x 5/8" N.F. Hex. Head		3
	103 323	Lock Washer, 1/2"		3
32	39 759 DA	Breather Pipe Clip		1

§ - Not Supplied Separately.

REF. NO.	PART NUMBER	DESCRIPTION	SERIAL NUMBER	NO. REQ'D
		CRANKCASE, FRONT COVER, FRONT AND REAR ENGINE SUPPORTS, CAMSHAFT AND RELATED PARTS—Continued		
33	4 993 DD	Crankshaft Rear Oil Seal Upper Retainer		1
33A	39 401 DB	Crankshaft Rear Oil Seal Retainer, Complete (Aluminum)		1
		(Composed of:		
		1 Retainer 4 993 DD		
		1 Retainer 4 994 DD		
		2 Felt 260 002 R1		
		2 Gasket 260 003 R1)		
	179 842	Cap Screw, 3/8 x 1-3/8" N.C. Hex Head		6
	186 283	Cap Screw, 3/8 x 3-1/2" N.C. Hex Head		2
	Q 1 597	Washer, 3/4" O.D. x 13/32" I.D. x No. 16 Gauge		8
	103 321	Lock Washer, 3/8"		2
34	260 002 R1	Crankshaft Rear Oil Seal Felt (Will Work for 32 307 DB)		2
34A	4 994 DD	Crankshaft Rear Oil Seal Lower Retainer		1
	179 842	Cap Screw, 3/8 x 1-3/8" N.C. Hex Head		2
	Q 1 597	Washer, 3/4" O.D. x 13/32" I.D. x No. 16 Gauge		2
	103 321	Lock Washer, 3/8"		2
35	260 003 R1	Crankshaft Rear Oil Seal Retainer Gasket		
		(Will Work for 256 699 R2 or 32 308 DB)		2
36	47 415 H	Rear Engine Support Stud Nut Lockwasher (Shakeproof 1128)		11
37	49 952 D	Rear Engine Support Stud (Will Work for 42 718 DB)		11
	103 030	Hex Nut, 5/8" N.F.		11
38	25 086 DA	Rear Engine Support Dowel		2
40	32 309 DD	Crankshaft Rear Oil Seal Gasket		1
41	25 063 DA	Flywheel Timing Mark Cover		1
	179 814	Cap Screw, 5/16 x 5/8" N.F. Hex Head		2
	103 320	Lock Washer, 5/16"		2
42	42 713 D	Crankcase Rear Dust Seal		1
	181 360	Cap Screw, 3/8 x 3/4" N.F. Hex Head		5
	179 841	Cap Screw, 3/8 x 1-1/4" N.C. Hex Head		2
	103 321	Lock Washer, 3/8"		7
43	42 714 DB	Crankcase Rear Dust Gasket		1
44	32 310 DX	Crankcase Oil Seal Retainer Plate with 3 Studs, 32 311 D		1
	179 839	Cap Screw, 3/8 x 1" N.C. Hex Head		4
	103 321	Lock Washer, 3/8"		4
45	32 311 D	Crankcase Oil Seal Retainer Plate Stud		3
46	25 093 DA	Crankcase Oil Seal Retainer Plate Felt Plug		2
47	32 312 DB	Crankcase Oil Seal Retainer Plate Gasket		1
48	21 826 H	Crankcase Rear Camshaft Bearing Expansion Plug, 2-1/4"		1
49	50 474 DA	Oil Header Plug, 1/4"		5
50	58 511 D	Push Rod Chamber Side Plate Bolt Washer (Optional with		
		62 866 D)		1
50	62 866 D	Push Rod Chamber Side Plate Bolt Washer		
		(Will Work for 49 387 D or 58 511 D)		4
51	46 351 D	Lubricating Oil Filter Return Pipe	TDRM 22001 to 25008	1
52	24 857 D	Crankcase Water Jacket Drain Cock		1
53	120 063	Street Elbow, 3/8" (For Water Jacket Drain Cock)		1
54	103 876	Pipe Plug, 1" Countersunk Head		1
57	42 733 D	Crankcase Side Cover Gasket		1
57A	25 139 DCR	Idler Gear Bushing		1

REF. NO.	PART NUMBER	DESCRIPTION	SERIAL NUMBER	NO. REQ'D
		CRANKCASE, FRONT COVER, FRONT AND REAR ENGINE SUPPORTS, CAMSHAFT AND RELATED PARTS—Continued		
58	8 929 D	Crankcase Side Cover		1
	179 839	Cap Screw, 3/8 x 1" N.C. Hex Head		4
	103 321	Lock Washer, 3/8"		4
59	114 499	Idler Gear Shaft Nut (Hex., 3/4" N.F.)	TDRM 22001 to 22946	1
59	259 546 R1	Idler Gear Shaft Nut	TDRM 22947 Up	1
60	25 132 D	Idler Gear Shaft Nut Lock	TDRM 22001 to 22946	1
63	50 410 DA	Oil Header Plug, 1/8"		4
64	38 028 DM	Crankcase Magneto Drive Metering Plug		1
65	25 138 DAX	Idler Gear Shaft with Pin, 29 764 D		
		(Order 259 545 R12)	TDRM 22001 to 22946	1
65	259 545 R12	Idler Gear Shaft with Pin, 29 764 D and Nut,		
		259 546 R1 (Will Work for 25 138 DAX)	TDRM 22947 Up	1
65	38 814 DX	Idler Gear Shaft (.015" Oversize) with Pin, 29 764 D		
		(Order 259 547 R12)	TDRM 501 to 22946	1
65	259 547 R12	Idler Gear Shaft (.015" Oversize) with Pin, 29 764 D		
		and Nut, 259 546 R1 (Will Work for 38 814 DX)	TDRM 22947 Up	1
66	32 368 DC	Crankcase Front Plate Gasket	TDRM 501 to 22946	1
67	25 087 D	Crankcase Front Cover Dowel		2
68	29 764 D	Idler Gear Shaft Dowel Pin		1
69	32 371 DC	Crankcase Front Cover Gasket		1
70	32 370 D	Crankcase Front Plate Screw Lock		3
71	32 380 D	Crankcase Front Plate Screw Strip		1
72	36 796 DA	Crankshaft Oil Flinger		1
73	36 797 D	Crankshaft Oil Flinger Trough		1
74	25 954 D	Crankcase Front Cover Oil Pan Stud		1
75	36 798 D	Crankshaft Front Oil Seal Felt		1
76	36 799 D	Crankshaft Front Oil Seal Felt Retainer		1
77	Q 3 615	Front Engine Support Lubricator Fitting, 1/8" Straight		1
78	45 976 D	Front Engine Support Shim, .0299"		2
78	45 977 D	Front Engine Support Shim, .0149"		X
79	42 709 DX	Front Engine Support with Bracket and Tube		1
	114 794	Nipple, 1/8 x 2"		1
	187 394	Coupling, 1/8"		1
80	32 283 DBR	Camshaft Rear Bearing		1
81	251 060 R2	Camshaft		1
82	32 282 DCR	Camshaft Third Bearing		1
83	52 606 D	Crankcase Locating Hole Plug		
		(Order Cork No. 6 Standard No. 2 Grade 9/16 x 3/4 x 15/16" Long)		2
84	32 281 DBR	Camshaft Second Bearing		1
85	32 280 DCR	Camshaft Front Bearing		1
86	117 977	Camshaft Gear Key (Woodruff"B")		1
87	5 960 D	Camshaft Thrust Plate		1
	179 883	Cap Screw, 1/2 x 1-1/4" N.C. Hex Head		2
	103 323	Lock Washer, 1/2"		2

X - As Required.

REF. NO.	PART NUMBER	DESCRIPTION	SERIAL NUMBER	NO. REQ'D
		CRANKCASE, FRONT COVER, FRONT AND REAR ENGINE SUPPORTS, CAMSHAFT AND RELATED PARTS—Continued		
88	256 065 R2	Camshaft Gear, 54 Teeth		1
89	25 323 D	Camshaft Gear Nut Lock		1
90	261 285 R1	Camshaft Gear Nut (Will Work for 58 253 D)		1
	25 076 D	Crankshaft Rear Oil Seal Retainer Dowel	TDRM 22001 to 23117	2
	50 826 D	Cross Shaft Return Spring Pin		1
	53 643 D	Cross Shaft Latch Bracket Stud		1
	251 283 R1	Water Pump Body Stud		1
	256 845 R3	Crankshaft Bearing Cap, Intermediate (See Note)		4
	256 846 R3	Crankshaft Bearing Cap, Rear (See Note)		1
	256 847 R3	Crankshaft Bearing Cap, Front (See Note)		1
	256 848 R1	Crankshaft Bearing Cap, Center (See Note)		1
	258 431 R91	Engine Complete (Diesel Engine is Complete from Flywheel to Fan)		1
	259 894 R1	Starting Motor Mounting Welding Bolt		1
	115 548	Distributor Hole Capscrew Lock Washer, 5/16"		1
	172 570	Expansion Plug, 1-3/8"		1
	172 574	Expansion Plug, 1-1/2"		3
	172 580	Expansion Plug, 1-7/8"		1
	172 598	Expansion Plug, 2-1/4"		1

NOTE: Orders should be placed with the Service Section, International Harvester Company, Melrose Park, Illinois. Orders should be marked "Machining facilities are available."

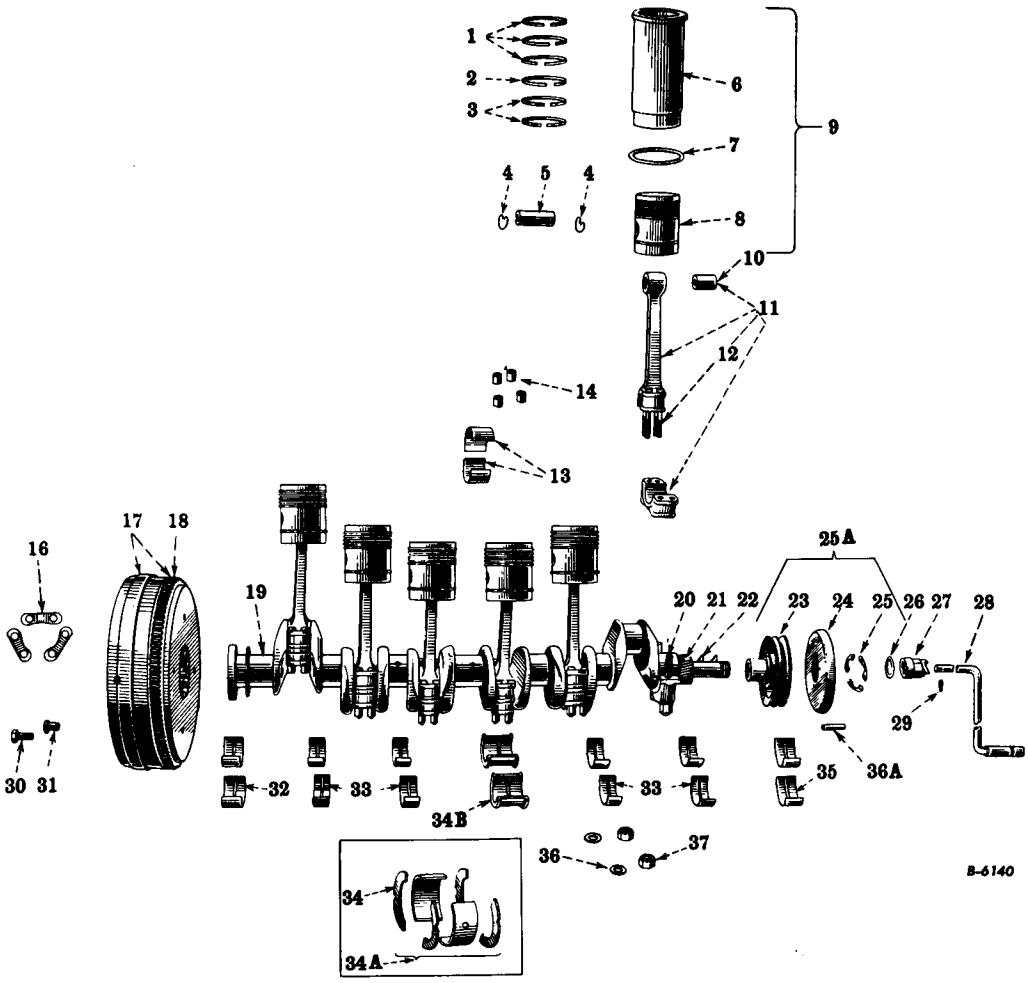

TDRM 22001 TO 24183

Reference numbers only are shown in illustration. Use I H part numbers in ordering.
Unnumbered Parts in the illustration are the same as corresponding parts shown with numbers.

CRANKSHAFT AND RELATED PARTS, CONNECTING RODS, PISTONS, SLEEVES, DRIVE PULLEY, VIBRATION DAMPER AND STARTING CRANK

1	31 458 D	Piston Ring (Compression, Plain) (Perfect Circle No. 3584)	18
1	261 148 R1	Piston Ring (Compression, Plain) (Sealed Power 1A304)	18
2	42 694 D	Piston Ring (Compression, Tapered Face)	
		(Perfect Circle No. 4129)	6
2	261 149 R1	Piston Ring (Compression, Tapered Face) (Sealed Power 1A305)	6
3	42 219 DB	Piston Ring, Upper (Oil Regulating) (Perfect Circle No. 72113)	12
3	261 150 R1	Piston Ring (Oil Regulating) (Sealed Power 1A306)	12
4	26 916 D	Piston Pin Retainer Ring	12
5	26 915 DA	Piston Pin (See Note)	6
5	53 612 DA	Piston Pin (.005" Oversize)	6
6	3 202 DD	Cylinder Sleeve (Order 258 836 R91)	6
7	4 222 D	Cylinder Sleeve Packing Ring	6
8	251 057 R1	Piston (Order 258 836 R91)	1

NOTE: When ordered for use in complete sets, furnish pins of one marking: red, white or blue.

REF. NO.	PART NUMBER	DESCRIPTION	SERIAL NUMBER	NO. REQ'D
		CRANKSHAFT AND RELATED PARTS, CONNECTING RODS, PISTONS, SLEEVES, DRIVE PULLEY, VIBRATION DAMPER AND STARTING CRANK—Continued		
9	258 836 R91	Piston, Complete with Sleeve		
		(Will Work for 251 053 R91 or 251 057 R1)		6
		(Composed of:		
		1 Sleeve §3 202 DD		
		1 Ring 4 222 D		
		1 Pin 26 915 DA		
		2 Ring 26 916 D		
		3 Ring 31 458 D		
		2 Ring 42 219 DB		
		1 Ring 42 694 D		
		1 Piston §251 057 R1)		
9	251 338 R91	Set of Six Cylinder Sleeves with Pistons, 258 836 R91		1
10	32 942 D	Connecting Rod Bushing (Will Work for 25 056 D)		6
11	254 924 R11	Connecting Rod, Cap and Bushing, Complete		6
		(Composed of:		
		1 Rod §254 924 R1		
		4 Bolt 28 737 DX		
		1 Bushing §25 056 D)		
11	254 926 R91	Set of Six Connecting Rods, Caps and Bushings, 254 924 R11		1
12	28 737 DX	Connecting Rod Bolt with Nut, 28 738 D		4
	103 374	Cotter Pin, 3/32 x 1"		1
13	42 688 DAX	Connecting Rod Bearing (2 Halves) (Standard)	TDRM 22001 to 24183	6
13	42 690 DAX	Connecting Rod Bearing (2 Halves) (.030" Undersize)	TDRM 22001 to 24183	6
13	64 368 DX	Connecting Rod Bearing (2 Halves) (.003" Undersize)	TDRM 22001 to 24183	6
13	257 291 R91	Connecting Rod Bearing (2 Halves) (Standard)	TDRM 24184 Up	6
13	257 294 R91	Connecting Rod Bearing (2 Halves) (.030" Undersize)	TDRM 24184 Up	6
13	257 292 R91	Connecting Rod Bearing (2 Halves) (.003" Undersize)	TDRM 24184 Up	6
14	28 738 D	Connecting Rod Bolt Nut		24
16	24 943 D	Flywheel Bolt Lock	TDRM 22001 to 23704	3
		Cork No. 5 Standard, 1/2 x 11/16" - For Balancing Holes		
		(Order Cork No. 6 Standard 2X Grade,		
		9/16 x 3/4 x 15/16" long)		X
17	5 958 DBX	Flywheel with Ring Gear, 31 208 H (Order 259 752 R91)	TDRM 22001 to 23704	1
17	259 743 R11	Flywheel with Ring Gear, 31 208 H	TDRM 23705 Up	1
18	31 208 H	Flywheel Ring Gear, 158 Teeth		1
19	32 288 DBXA	Crankshaft with Nut, 5 421 D (Standard)		1
19	32 305 DBXA	Crankshaft with Nut, 5 421 D (.030" Undersize)		
		(Order 254 287 R96)		1
20	256 833 R1	Crankshaft Bearing Cap Stud		16
	108 641	Cotter Pin, 1/8 x 1-3/8"		16
21	25 134 DB	Crankshaft Gear, 27 Teeth		1
22	117 994	Fan Drive Pulley Key (Woodruff 23)		2
23	258 273 R11	Fan Drive Pulley with 2 Pulley Pins, 47 490 D		1
24	261 672 R91	Vibration Damper (Will Work for 36 794 D)		1
	179 838	Cap Screw, 3/8 x 7/8" N.C. Hex Head		6
25	36 795 DA	Vibration Damper Screw Lock		3

§ - Not Supplied Separately

X - As Required.

REF. NO.	PART NUMBER	DESCRIPTION	SERIAL NUMBER	NO. REQ'D
		CRANKSHAFT AND RELATED PARTS, CONNECTING RODS, PISTONS, SLEEVES, DRIVE PULLEY, VIBRATION DAMPER AND STARTING CRANK—Continued		
25A	258 274 R91	Fan Drive Pulley and Vibration Damper, Complete		1
		(Composed of:		
		1 Damper 261 672 R91		
		4 Lock 36 795 DA		
		1 Pulley 258 273 R11		
		6 Cap Screw 179 838)		
26	18 767 D	Crankshaft Starting Nut Lock Washer		1
27	5 421 D	Crankshaft Starting Nut, 1-3/4" (Not Front Power Take-Off)		1
28	40 875 DAXA	Starting Crank, Complete		1
		(Composed of:		
		1 Pin 30 624 D		
		1 Sleeve §38 744 D		
		1 Bushing §40 874 DA		
		1 Crank §40 875 DA)		
29	30 624 D	Starting Crank Ratchet Pin		1
30	32 333 D	Flywheel Bolt	TDRM 22001 to 23704	6
30	262 583 R1	Flywheel Bolt	TDRM 23705 Up	6
31	32 332 D	Flywheel Dowel Pin	TDRM 22001 to 23704	2
31	250 754 R1	Flywheel Dowel Pin	TDRM 23705 Up	2
32	256 901 R91	Crankshaft Rear Bearing (2 Halves) (Standard)	TDRM 22001 to 24183	1
32	256 913 R91	Crankshaft Rear Bearing (2 Halves) (.030" Undersize)	TDRM 22001 to 24183	1
32	256 905 R91	Crankshaft Bearing, Rear (2 Halves) (.003" Undersize)	TDRM 22001 to 24183	1
32	257 281 R94	Crankshaft Rear Bearing (2 Halves) (Standard)		
		(Will Work for 257 238 R2 and 257 243 R4)	TDRM 24184 Up	1
32	257 284 R94	Crankshaft Rear Bearing (2 Halves) (.030" Undersize)		
		(Will Work for 257 241 R2 and 257 246 R4)	TDRM 24184 Up	1
32	257 282 R94	Crankshaft Rear Bearing (2 Halves) (.003" Undersize)		
		(Will Work for 257 239 R2 and 257 244 R4)	TDRM 24184 Up	1
33	256 900 R91	Crankshaft Intermediate Bearing (2 Halves) (Standard)	TDRM 22001 to 24183	4
33	256 912 R91	Crankshaft Intermediate Bearing (2 Halves)		
		(.030" Undersize)	TDRM 22001 to 24183	4
33	256 904 R91	Crankshaft Bearing, Intermediate (2 Halves)		
		(.003" Undersize)	TDRM 22001 to 24183	4
33	257 276 R94	Crankshaft Intermediate Bearing (2 Halves) (Standard)		
		(Will Work for 257 228 R2 and 257 233 R4)	TDRM 24184 Up	4
33	257 279 R94	Crankshaft Intermediate Bearing (2 Halves) (.030" Undersize)		
		(Will Work for 257 231 R2 and 257 236 R4)	TDRM 24184 Up	4
33	257 277 R94	Crankshaft Intermediate Bearing (2 Halves) (.003" Undersize)		
		(Will Work for 257 229 R2 and 257 234 R4)	TDRM 24184 Up	4
34	63 330 DA	Crankshaft Center Bearing Thrust Washer		
		(Order 256 899 R91, 256 903 R91 or 256 911 R91)		4
34A	256 899 R91	Crankshaft Center Bearing (Standard)		
		(2 Halves with Thrust Washer)	TDRM 22001 to 24183	1
34A	256 911 R91	Crankshaft Center Bearing (.030" Undersize)		
		(2 Halves with Thrust Washer)	TDRM 22001 to 24183	1
34A	256 903 R91	Crankshaft Bearing, Center (2 Halves)		
		(.003" Undersize) (With Thrust Washers)	TDRM 22001 to 24183	1

§ - Not Supplied Separately.

REF. NO.	PART NUMBER	DESCRIPTION	SERIAL NUMBER	NO. REQ'D
		CRANKSHAFT AND RELATED PARTS, CONNECTING RODS, PISTONS, SLEEVES, DRIVE PULLEY, VIBRATION DAMPER AND STARTING CRANK—Continued		
34B	258 637 R91	Crankshaft Center Bearing (2 Halves) (Standard)		
		(Will Work for 258 642 R1 and 258 647 R1)	TDRM 24184 Up	1
34B	258 640 R91	Crankshaft Center Bearing (2 Halves) (.030" Undersize)		
		(Will Work for 258 645 R1 and 258 650 R1)	TDRM 24184 Up	1
34B	258 638 R91	Crankshaft Center Bearing (2 Halves) (.003" Undersize)		
		(Will Work for 258 643 R1 and 258 648 R1)	TDRM 24184 Up	1
35	256 898 R91	Crankshaft Front Bearing (2 Halves (Standard)	TDRM 22001 to 24183	1
35	256 910 R91	Crankshaft Front Bearing (2 Halves) (.030" Undersize)	TDRM 22001 to 24183	1
35	256 902 R91	Crankshaft Bearing, Front (2 Halves)		
		(.003" Undersize)	TDRM 22001 to 24183	1
35	257 271 R94	Crankshaft Front Bearing (2 Halves) (Standard)		
		(Will Work for 257 218 R2 and 257 223 R4)	TDRM 24184 Up	1
35	257 274 R94	Crankshaft Front Bearing (2 Halves) (.030" Undersize)		
		(Will Work for 257 221 R2 and 257 226 R4)	TDRM 24184 Up	1
35	257 272 R94	Crankshaft Front Bearing (2 Halves) (.003" Undersize)		
		(Will Work for 257 219 R2 and 257 224 R4)	TDRM 24184 Up	1
36	39 422 D	Crankshaft Bearing Cap Stud Nut Washer		16
36A	47 490 D	Fan Drive Pulley Pin		2
37	39 423 D	Crankshaft Bearing Cap Stud Nut, 3/4" N.F.		16
	108 641	Cotter Pin, 1/8 x 1-3/8"		16
	117 994	Crankshaft Gear Key		1
	250 952 R92	Replacement Piston Ring Kit (Consists of - 18-Compression		
		Rings (Plain) 6-Compression Rings (Tapered) 12-Oil		
		Regulating Rings (Upper) (Perfect Circle)		
		(261 154 R91 Will Work)		1
	254 287 R92	Field Package (.030" Undersize) Crankshaft and Set of		
		Crankshaft Bearings, 254 264 R92 (Order 254 287 R96)	TDRM 22001 to 24183	1
	254 287 R96	Field Package (.030" Undersize) Crankshaft and Set of		
		Bearings, 257 265 R94 (Will Work for 254 287 R92)	TDRM 24184 Up	1
	254 264 R92	Set of Crankshaft Bearings (.030" Undersize)		
		Complete	TDRM 22001 to 24183	1
		(Composed of:		
		6 Rod Bearing 42 690 DAX		
		1 Front Bearing 256 910 R91		
		1 Center Bearing 256 911 R91		
		4 Intermediate Bearing 256 912 R91		
		1 Rear Bearing 256 913 R91)		
	257 265 R94	Set of Crankshaft Bearings (.030" Undersize)		
		Complete	TDRM 24184 Up	1
		(Composed of:		
		1 Bearing 257 274 R94		
		4 Bearing 257 279 R94		
		1 Bearing 257 284 R94		
		6 Bearing 257 294 R91		
		1 Bearing 258 640 R91)		

REF. NO.	PART NUMBER	DESCRIPTION	SERIAL NUMBER	NO. REQ'D

CRANKSHAFT AND RELATED PARTS, CONNECTING RODS, PISTONS, SLEEVES, DRIVE PULLEY, VIBRATION DAMPER AND STARTING CRANK—Continued

	257 263 R94	Set of Crankshaft Bearings (.003" Undersize)		
		Complete	TDRM 24184 Up	1
		(Composed of:		
		1 Bearing 257 272 R94		
		4 Bearing 257 277 R94		
		1 Bearing 257 282 R94		
		6 Bearing 257 292 R91		
		1 Bearing 258 638 R91)		
	259 752 R91	Flywheel Service Package, Complete		
		(Will Work for 5 958 DBX)	TDRM 22001 to 23704	1
		(Composed of:		
		2 Pin 250 754 R1		
		1 Flywheel 259 743 R11		
		6 Screw 222 570		
		1 Installation Diagram IZG 350)		
	261 154 R91	Replacement Piston Ring Kit (Consists of 18 Compression		
		Rings (Plain) 6 Compression Rings (Tapered) 12 Oil		
		Regulating Rings (Upper) (Sealed Power)		
		(250 952 Will Work)		1
	263 249 R91	Set of Crankshaft Bearings (Standard), Complete		1
		(Composed of:		
		1 Bearing 257 271 R94		
		4 Bearing 257 276 R94		
		1 Bearing 257 281 R94		
		6 Bearing 257 291 R91		
		1 Bearing 258 637 R91)		

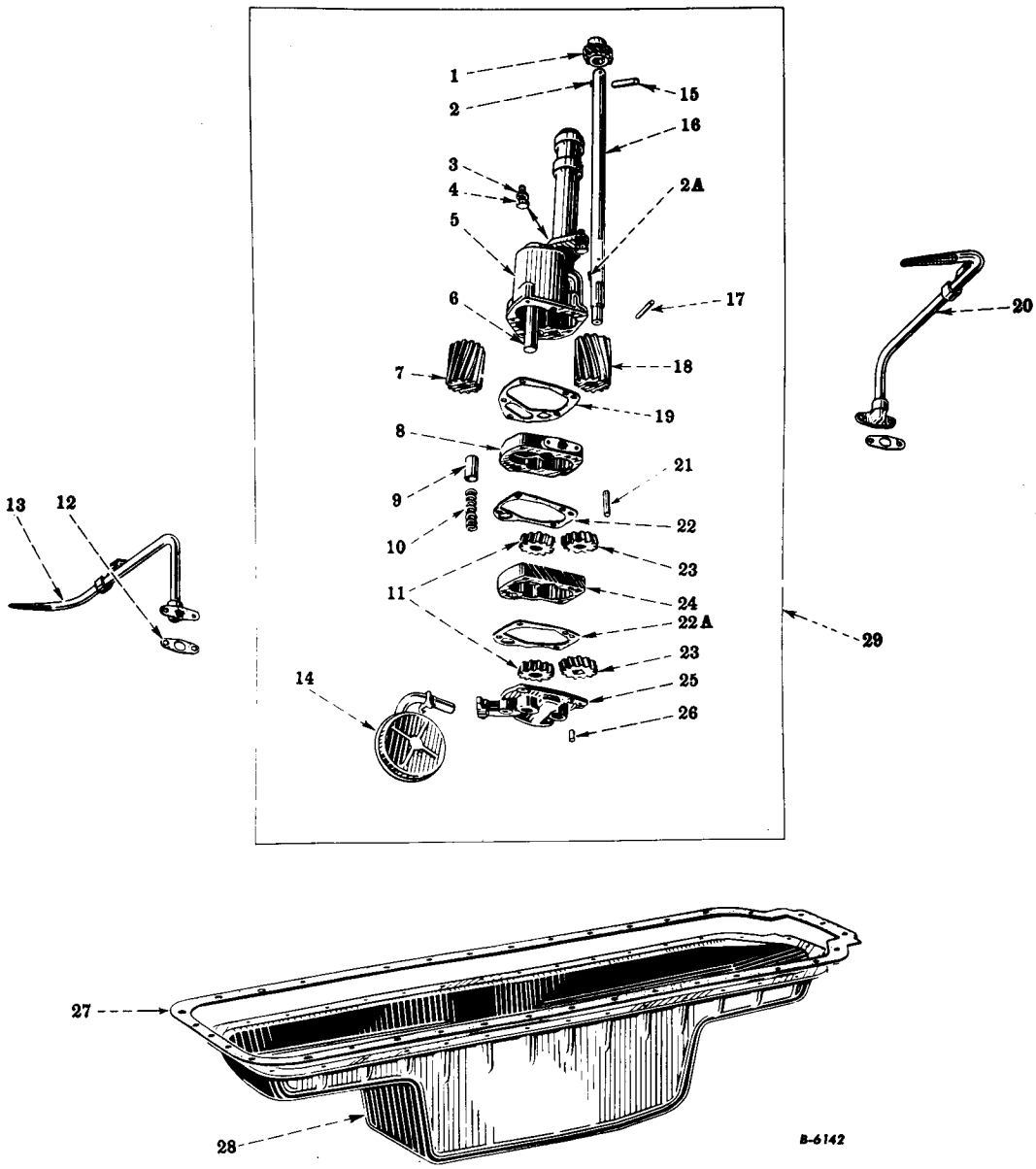

Reference numbers only are shown in illustration. Use I H part numbers in ordering.
Unnumbered parts in the illustrations are the same as corresponding parts shown with numbers.

CRANKCASE OIL PAN AND LUBRICATING PUMP

1	46 054 DD	Lubricating Oil Pump Drive Pinion, 14 Teeth	1
2	106 750	Lubricating Oil Pump Drive Pinion Key (Woodruff No. 6)	1
2A	13 021 D	Lubricating Oil Pump Body Gear Key (Woodruff No. 6)	1
3	103 323	Follows Reference No. 4	
4	10 961 D	Lubricating Oil Pump Body Cap Screw	2
	103 323	Lockwasher, 1/2"	2

REF. NO.	PART NUMBER	DESCRIPTION	SERIAL NUMBER	NO. REQ'D
		CRANKCASE OIL PAN AND LUBRICATING PUMP—Continued		
5	5 981 DXA	Lubricating Oil Pump Body with Idler Gear Shaft, 42 786 D		
		and 1 Plug, 103 875		1
6	42 786 D	Lubricating Oil Pump Idler Gear Shaft		1
7	50 336 DA	Lubricating Oil Pump Idler Gear, 12 Teeth		1
8	5 982 DAX	Lubricating Oil Pump Auxiliary Gear Upper Housing with		
		Dowel Pin, 46 053 D		1
	179 848	Cap Screw, 3/8 x 1-3/4" N.C. Hex Head		1
	103 321	Lock Washer, 3/8"		1
9	258 417 R2	Oil Pressure Regulating Valve (Will Work for 45 285 DA)		1
10	259 525 R1	Oil Pressure Regulating Valve Spring		
		(Not Used on Full Flow Filter)	TDRM 22001 to 25008	1
10	261 960 R1	Oil Pressure Regulating Valve Spring		
		(Used Only on Full Flow Filter)	TDRM 25009 Up	1
11	51 516 DA	Lubricating Oil Pump Auxiliary Idler Gear, 12 Teeth		2
12	42 792 D	Lubricating Oil Return Pipe Elbow Gasket		2
13	43 003 DX	Lubricating Oil Return Pipe, Front, Complete		1
	179 816	Cap Screw, 5/16 x 3/4" N.C. Hex Head - Thru Flange		2
	179 837	Cap Screw, 3/8 x 3/4" N.C. Hex Head - Thru Pipe Clip		1
	103 320	Lock Washer, 5/16"		2
	103 321	Lock Washer, 3/8"		1
14	42 791 DA	Lubricating Oil Pump Float		1
	103 387	Cotter Pin, 1/8 x 1-1/2"		1
15	5 312 T3	Lubricating Oil Pump Drive Pinion Pin		1
16	255 098 R22	Lubricating Oil Pump Drive Shaft with Pins,		
		32 319 D, 5 312 T3 and 260 717 R1		1
17	32 319 D	Lubricating Oil Pump Body Gear Pin	TDRM 22001 to 24019	1
17	260 717 R1	Lubricating Oil Pump Body Gear Pin	TDRM 24020 Up	1
18	260 766 R11	Lubricating Oil Pump Body Gear with Pin, 260 717 R1		
		(Will Work for 260 766 R1 and 50 335 DB)		1
19	42 789 D	Lubricating Oil Pump Auxiliary Gear Upper Housing Gasket		1
20	43 004 DX	Lubricating Oil Return Pipe, Rear		1
	179 837	Cap Screw, 3/8 x 3/4" N.C. Hex Head - Thru Pipe Clip		1
	103 321	Lock Washer, 3/8"		1
21	46 053 D	Lubricating Oil Pump Auxiliary Gear Upper Housing Dowel Pin		1
22	42 790 D	Lubricating Oil Pump Cover Gasket		1
22 A	42 790 D	Lubricating Oil Pump Auxiliary Gear Lower Housing Gasket		1
23	51 515 DA	Lubricating Oil Pump Auxiliary Body Gear, 12 Teeth		2
24	5 983 D	Lubricating Oil Pump Auxiliary Gear Lower Housing		1
25	5 984 DX	Lubricating Oil Pump Cover with Dowel, 46 052 D		1
	179 851	Cap Screw, 3/8 x 3" N.C. Hex Head		3
	186 284	Cap Screw, 3/8 x 3-3/4" N.C. Hex Head		1
	103 321	Lock Washer, 3/8"		4
26	46 052 D	Lubricating Oil Pump Cover Dowel Pin		1
27	42 715 DE	Crankcase Oil Pan Gasket		1
28	5 963 DBX	Crankcase Oil Pan with 2 Plugs, 103 876 and 1 Plug,		
		103 870		1
	179 842	Cap Screw, 3/8 x 1-1/4" N.C. Hex Head		32
	103 321	Lock Washer, 3/8"		36
	103 026	Hex Nut, 3/8" N.F.		4

REF. NO.	PART NUMBER	DESCRIPTION	SERIAL NUMBER	NO. REQ'D
		CRANKCASE OIL PAN AND LUBRICATING PUMP—Continued		
29	42 794 DC	Lubricating Oil Pump, Complete		1
		(Composed of:		
		1 Body	5 981 DXA	
		1 Housing	5 982 DAX	
		1 Cover	5 984 DX	
		1 Key	13 021 D	
		1 Gasket	42 789 D	
		2 Gasket	42 790 D	
		1 Float	42 791 DA	
		1 Pinion	46 054 DD	
		1 Gear	50 336 DA	
		2 Gear	51 515 DA	
		2 Gear	51 516 DA	
		5 Lock Washer	103 321	
		1 Pin	103 387	
		1 Key	106 750	
		1 Screw	179 845	
		3 Screw	179 851	
		1 Screw	186 284	
		1 Shaft	255 098 R22	
		1 Valve	258 417 R2	
		1 Spring	259 525 R1	
		1 Pin	260 717 R1	
		1 Gear	260 766 R11	
		1 Spring	261 960 R1	
		1 Caution Tag	1 004 774 R2)	
	10 961 D	Cap Screw, 1/2 x 1-1/4" N.C. Hex Head		2
	103 323	Lock Washer, 1/2"		2
	58 960 D	Crankcase Oil Pan Magnetic Drain Plug (Special)		1
	64 047 D	Crankcase Oil Pan with Magnetic Drain Plug, 58 690 D (Special)		1
	68 252 D	Lubricating Oil Pump Body Capscrew Lockwire (3/32 x 10" Soft Iron Wire) (Use with 10 961 D)		1
	103 870	Crankcase Oil Pan Plug, 1" Square Head		1
	103 875	Lubricating Oil Pump Body Plug, 3/4" Countersunk Head		1
	103 876	Crankcase Oil Pan Plug, 1" Countersunk Head		1

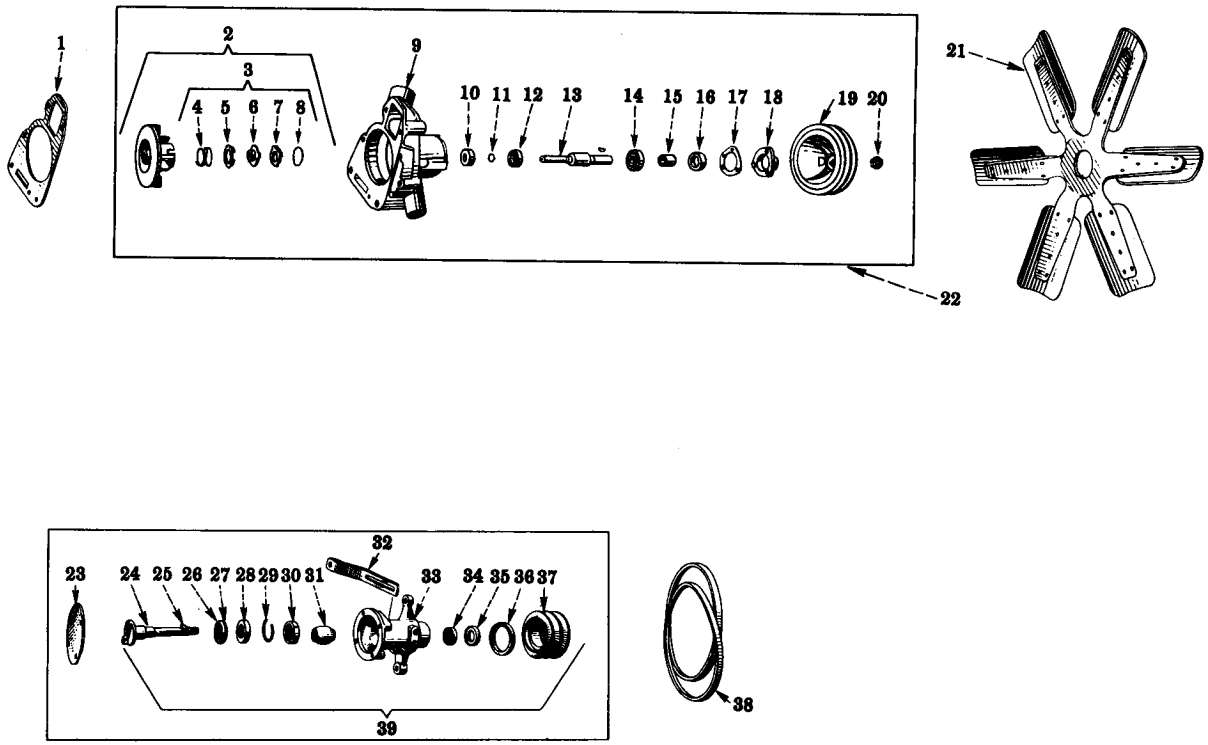

FAN, WATER PUMP AND IDLER PULLEY

Reference numbers only are shown in illustration. Use I H part numbers in ordering.
Unnumbered parts in the illustrations are the same as corresponding parts shown with numbers.

DIESEL ENGINE

REF. NO.	PART NUMBER	DESCRIPTION	SERIAL NUMBER	NO. REQ'D
		FAN, WATER PUMP AND IDLER PULLEY		
1	251 133 R2	Water Pump Body Gasket		1
2	251 134 R21	Water Pump Impeller with Oil Seal, 144 093 H or		
		Oil Seal, 251 609 R92		1
3	144 093 H	Water Pump Seal, Complete (Will Work for 251 609 R92)		1
		(Composed of:		
		1 Spring 98 047 H		
		1 Guide 98 048 H		
		1 Seal 98 049 H		
		1 Ring 98 050 H		
		1 Washer 98 051 H		
		1 Wire 98 052 H)		
3	251 609 R92	Water Pump Seal, Complete (Will Work for 144 093 H)		1
		(Composed of:		
		1 Washer 98 051 H		
		1 Ring 98 052 H		
		1 Bellows 135 517 HA)		
4	98 047 H	Water Pump Seal Spring (Used with 144 093 H)		1
5	98 048 H	Water Pump Seal Spring Guide (Used with 144 093 H)		1
6	98 049 H	Water Pump Flexible Steel (Used with 144 093 H)		1
7	98 051 H	Water Pump Seal Carbon Washer		
		(Used with 144 093 H or 251 609 R91)		1
8	98 052 H	Water Pump Snap Wire Ring		
		(Used with 144 093 H or 251 609 R91)		1
9	258 149 R11	Water Pump Body, Complete (Will Work for 257 208 R11)		1
		(Composed of:		
		1 Plug 103 867		
		1 Plug 103 873		
		1 Plug 103 874		
		1 Seal 257 209 R91		
		1 Body §258 149 R1)		
10	257 209 R91	Water Pump Oil Seal, Inner		1
11	257 211 R91	Water Pump Bearing Inner Snap Ring		1
12	ST 262	Water Pump Bearing, Inner (IH C217)		
		(Will Work for 261 115 R91)		1
12	261 115 R91	Water Pump Bearing, Inner (ND 3203) (Optional with ST 262)		1
13	257 210 R1	Water Pump Shaft		1
14	56 192 D	Water Pump Bearing, Outer		1
15	257 212 R1	Water Pump Bearing Spacer		1
16	257 215 R91	Water Pump Oil Seal, Outer		1
17	257 214 R1	Water Pump Oil Seal Housing Gasket		1
18	257 213 R11	Water Pump Oil Seal Housing with Oil Seal, 257 215 R91		1
	179 817	Cap Screw, 5/16 x 7/8" N.C. Hex Head		3
	103 320	Lock Washer, 5/16"		3
19	257 216 R1	Water Pump Pulley		1
20	257 217 R1	Water Pump Pulley Nut		1
21	254 977 R91	Suction Fan		1

§ - Not Supplied Separately.

REF. NO.	PART NUMBER	DESCRIPTION	SERIAL NUMBER	NO. REQ'D
		FAN, WATER PUMP AND IDLER PULLEY—Continued		
22	258 270 R91	Water Pump, Complete (Less Fan)		1
		(Composed of:		
		1 Bearing	ST 262	
		or		
		1 Bearing	261 115 R91	
		1 Bearing	56 192 D	
		3 Lock Washer	103 320	
		1 Key	103 907	
		3 Cap Screw	179 817	
		1 Impeller	251 134 R21	
		1 Shaft	257 210 R1	
		1 Ring	257 211 R91	
		1 Spacer	257 212 R1	
		1 Housing	257 213 R11	
		1 Gasket	257 214 R1	
		1 Pulley	257 216 R1	
		1 Nut	257 217 R1	
		1 Body	258 149 R11)	
23	47 824 D	Fan Belt Idler Bracket Cover		1
	181 377	Cap Screw, 3/8 x 1-3/4" N.F. Hex Head		4
	103 026	Hex Nut, 3/8" N.F.		4
	103 321	Lock Washer, 3/8"		4
24	42 938 D	Fan Belt Idler Shaft		1
	114 498	Hex Nut, 5/8"		1
	103 325	Lock Washer, 5/8"		1
25	103 646	Fan Belt Idler Pulley Key		1
26	49 942 D	Fan Belt Idler Shaft Felt Retainer		1
27	42 941 D	Fan Belt Idler Shaft Felt		1
28	42 940 D	Fan Belt Idler Oil Seal (Pulley End)		1
29	42 939 D	Fan Belt Idler Bearing Lock Ring		1
30	ST 207	Fan Belt Idler Bearing, Rear (IH C220)		
		(Will Work for 8 522 T)		1
30	8 522 T	Fan Belt Idler Bearing, Rear (ND 3204) (Optional with St 207)		1
31	5 988 DA	Fan Belt Idler Bearing Spacer		1
32	32 523 DA	Fan Belt Idler Brace		1
	179 839	Cap Screw, 3/8 x 1" N.C. Hex Head		1
	181 370	Cap Screw, 3/8 x 1-1/4" N.F. Hex Head		1
	103 026	Hex Nut, 3/8"		1
	103 321	Lock Washer, 3/8"		2
	Q 1 597	Washer, 13/32" I.D. x 3/4" O.D. x No. 16 Gauge		1
33	5 987 DX	Fan Belt Idler Bracket with Oil Seal, 42 940 D		1
	103 865	Pipe Plug, 1/8"		1
	186 336	Cap Screw, 1/2 x 4-1/2" N.F. Hex Head		1
	103 028	Hex Nut, 1/2" N.F.		1
	103 323	Lock Washer, 1/2"		1
34	ST 262	Fan Belt Idler Bearing, Front (IH C217)		
		(Will Work for 261 115 R91)		1
34	261 115 R91	Fan Belt Idler Bearing, Front (ND 3203) (Optional with ST 262)		1
35	42 940 D	Fan Belt Idler Oil Seal (Coupling End)		1

REF. NO.	PART NUMBER	DESCRIPTION	SERIAL NUMBER	NO. REQ'D
		FAN, WATER PUMP AND IDLER PULLEY—Continued		
36	42 943 D	Fan Belt Idler Felt		1
37	5 989 D	Fan Belt Idler Pulley		1
38	258 275 R11	Fan Belt (Pair)		1
39	63 007 D	Fan Belt Idler, Complete		1
		(Composed of:		
		1 Bearing (IH C220) ST 207		
		or		
		1 Bearing (ND 3204) 8 522 T		
		1 Bearing (IH C217) ST 262		
		or		
		1 Bearing (ND 3203) 261 115 R91		
		1 Lubricator Q3 615		
		1 Bracket 5 987 DX		
		1 Spacer 5 988 DA		
		1 Pulley 5 989 D		
		1 Shaft 42 938 D		
		1 Ring 42 939 D		
		1 Seal 42 940 D		
		1 Felt 42 941 D		
		1 Retainer 42 942 D		
		1 Lock Washer 103 325		
		1 Key 103 646		
		1 Nut 114 498)		
	98 050 H	Water Pump Seal Clamp Ring (Used with 144 093 H)		1
	137 517 HA	Water Pump Seal Bellows (Used with 251 609 R92)		1
	179 839	Cap Screw, 3/8 x 1" N.C. Hex Head		4
	103 321	Lock Washer, 3/8"		4
	Q 3 615	Fan Belt Idler Lubricator, 1/8"		1
	254 281 R1	Blower Fan Adapter (Special)		1
	255 009 R92	Blower Fan Attachment (Factory Application - Order on		
		Machine Order Form) (Field Application - Order Through		
		Regular Service Parts Channels.)		1
		(Composed of:		
		12 Lock Washer 103 321		
		12 Cap Screw 179 839		
		1 Adapter 254 281 R1		
		1 Fan 256 355 R91		
		1 Decalcomania 1 001 170 R1)		
	256 355 R91	Blower Fan (Special)		1
	179 839	Cap Screw, 3/8 x 1" N.C. Hex Head		6
	103 321	Lock Washer, 3/8"		6
	103 867	Water Pump Body Pipe Plug, 3/8" Square Head		1
	103 873	Water Pump Body Pipe Plug, 3/8" Countersunk Head		1
	103 874	Water Pump Body Pipe Plug, 1/2" Countersunk Head		1
	103 907	Water Pump Pulley Key		1

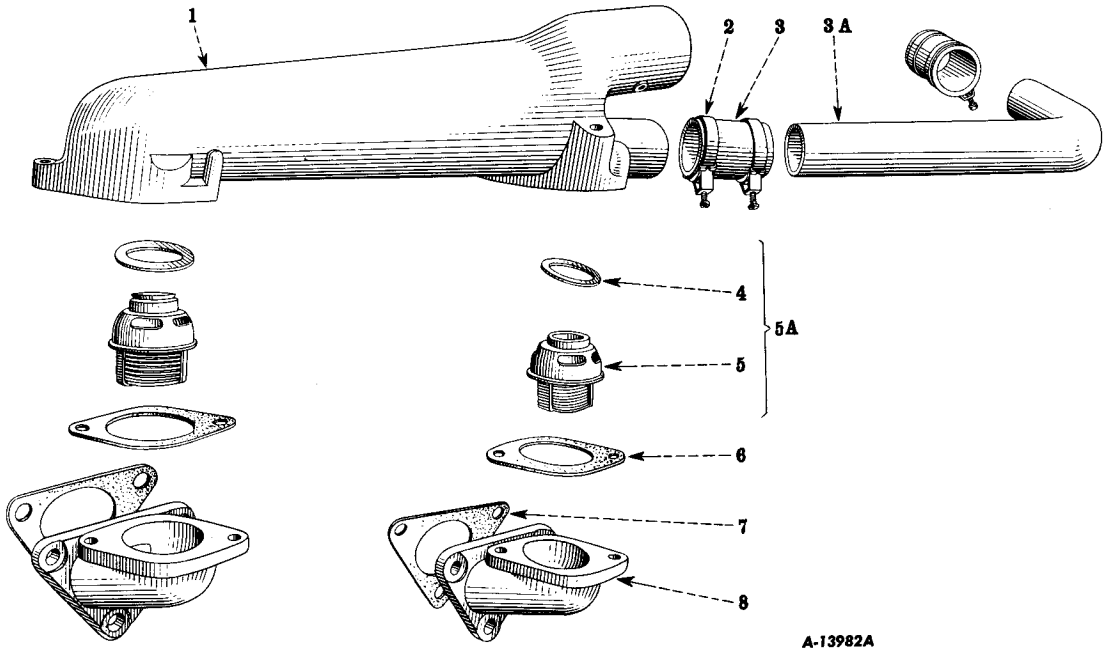

Reference numbers only are shown in illustration. Use I H part numbers in ordering.
Unnumbered Parts in the illustration are the same as corresponding parts shown with numbers.

THERMOSTATS, ENGINE WATER OUTLET HEADER AND CONNECTING PARTS

1	251 140 R11	Engine Water Outlet Header with Plug, 256 659 R1	1
	179 841	Cap Screw, 3/8 x 1-1/4" N.C. Hex Head	4
	103 321	Lock Washer, 3/8"	4
2	91 406 HA	Engine Water Outlet Header By-Pass Pipe Hose Clamp	4
3	15 435 D	Engine Water Outlet Header By-Pass Pipe Hose	
		(1-3/4" I.D. x 2-1/2" Long, 3 Ply)	2
3A	251 171 R2	Engine Water Outlet Header By-Pass Pipe	1
4	254 753 R1	Thermostat Seal	2
5	250 670 R92	Thermostat 165° to 190° with Seal, 254 753 R1 (Standard)	
		(Order 261 514 R91)	2
5A	261 514 R91	Thermostat 165° to 190° with Seal, 254 753 R1	
		(Will Work for 250 670 R92)	2
6	251 170 R2	Engine Water Outlet Header Gasket	2
7	251 169 R2	Engine Water Outlet Elbow Gasket	2
8	251 168 R1	Engine Water Outlet Elbow	2
	179 883	Cap Screw, 1/2 x 1-1/4" N.C. Hex Head	6
	103 323	Lock Washer, 3/8"	6
	256 659 R1	Engine Water Outlet Header Plug, 1"	1

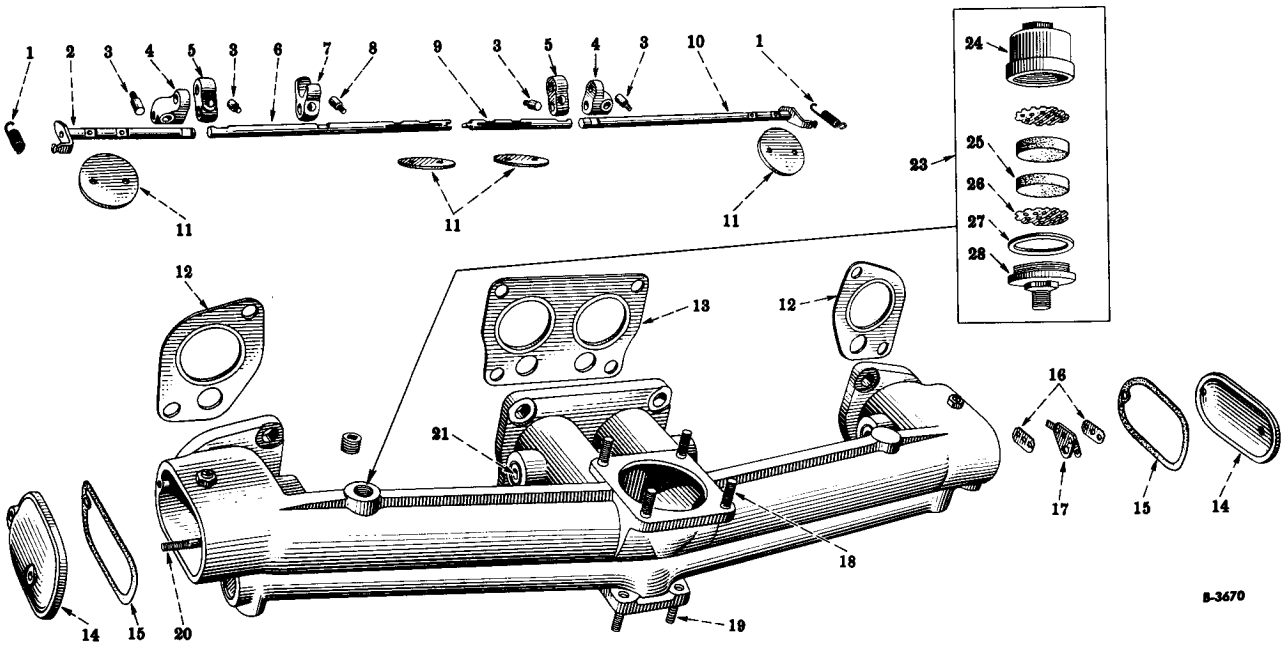

Reference numbers only are shown in illustration. Use I H part numbers in ordering.
Unnumbered Parts in the illustration are the same as corresponding parts shown with numbers.

INTAKE MANIFOLD AND INJECTION PUMP BREATHER

	254 900 R12	Intake Manifold, Complete (Will Work for 251 139 R22)						1
		(Composed of:						
		8	Stud	41 634 D	2	Cap Screw	179 841	
		5	Pin	42 739 DA	8	Screw	228 148	
		4	Valve	50 697 D	2	Stud	250 528 R1	
		4	Seal	53 083 D	2	Coupling	250 546 R1	
		5	Nut	103 024	2	Flange	250 547 R1	
		2	Lock Washer	103 320	1	Lever	250 548 R1	
		2	Lock Washer	103 321	2	Spring	250 549 R1	
		2	Washer	103 341	1	Shaft	251 315 R12	
		1	Plug	103 873	1	Shaft	251 316 R11	
		4	Plug	103 883	1	Shaft	251 317 R1	
		5	Lock Washer	114 604	1	Shaft	251 318 R1	
		2	Plug	172 545	1	Manifold	§254 900 R1)	
		2	Cap Screw	179 812				
1	250 549 R1	Manifold Control Spring						2
2	251 316 R11	Manifold Control Shaft, Rear, with Lever						1
3	42 739 DA	Manifold Control Shaft Flange Pin						4
	103 024	Hex Nut, 1/4" N.F.						4
	114 604	Lock Washer, 1/4"						4
4	250 546 R1	Manifold Control Shaft Coupling						2
	179 841	Cap Screw, 3/8 x 1-1/4" N.C. Hex Head						2
	103 321	Lock Washer, 3/8"						2
	103 341	Washer, 13/32" I.D. x 13/16" O.D. x No. 16 Gauge						1
5	250 547 R1	Manifold Control Shaft Flange						2
6	251 318 R1	Manifold Control Shaft, Rear, Intermediate						1

§ - Not Supplied Separately.

REF. NO.	PART NUMBER	DESCRIPTION	SERIAL NUMBER	NO. REQ'D.
		INTAKE MANIFOLD AND INJECTION PUMP BREATHER—Continued		
7	250 548 R1	Manifold Control Lever		1
8	42 739 DA	Manifold Control Lever Pin		1
	103 024	Hex Nut, 1/4" N.F.		1
	114 604	Lock Washer, 1/4"		1
9	251 317 R1	Manifold Control Shaft, Front, Intermediate		1
10	251 315 R12	Manifold Control Shaft, Front, with Lever		1
11	50 697 D	Manifold Butterfly Valve		4
	228 148	Manifold Butterfly Valve Screw		8
12	251 329 R1	Intake Manifold Gasket, End		2
13	251 330 R1	Intake Manifold Gasket, Center		1
14	250 551 R1	Intake Manifold End Cover		2
	179 818	Cap Screw, 5/16 x 1" N.C. Hex.Head		2
	103 025	Hex Nut, 5/16" N.F.		2
	103 320	Lock Washer, 5/16"		4
15	250 550 R1	Intake Manifold End Cover Gasket		2
16	52 514 D	Ignition Cut-Out Switch Insulation Plate		2
	110 504	Screw, No. 8 - 32 x 3/8"		1
	106 497	Lock Washer, No. 10		1
	Q 102	Washer, 13/64" I.D. x 1/2" O.D. x No. 18 Gauge		1
17	52 515 DA	Ignition Cut-Out Switch Contact and Terminal Plate		1
18	41 634 D	Carburetor Stud		4
19	41 634 D	Air Intake Flange Stud		4
20	250 528 R1	Intake Manifold End Cover Stud		2
21	53 083 D	Manifold Control Shaft Seal		4
	250 451 R1	Intake Manifold Stud Nut (Used with 251 139 R22)		8
	220 066	Hex Nut, 3/8"		2
	102 843	Set Screw, 3/8 x 1" N.C. Headless		2
		INJECTION PUMP BREATHER		
23	64 643 D	Injection Pump Breather, Complete		1
		(Composed of:		
		1 Body 9 453 D		
		1 Cap 9 454 D		
		1 Gasket 64 576 D		
		2 Element 64 577 D		
		2 Retainer 64 578 D)		
24	9 453 D	Injection Pump Breather Body		1
25	64 577 D	Injection Pump Breather Filter Element		2
26	64 578 D	Injection Pump Breather Filter Element Retainer		2
27	64 576 D	Injection Pump Breather Body Gasket		1
28	9 454 D	Injection Pump Breather Body Cap		1
		EXHAUST MANIFOLDS AND PIPES		
	41 641 DX	Exhaust Pipe with Flange		2
	220 068	Hex Nut, 1/2" N.C.		8
	50 677 D	Exhaust Pipe Stud		4
	250 451 R1	Exhaust Manifold Stud Nut		8
	251 141 R11	Exhaust Manifold with 4 Pipe Studs, 50 677 D		2
	251 167 R1	Exhaust Manifold Gasket		4

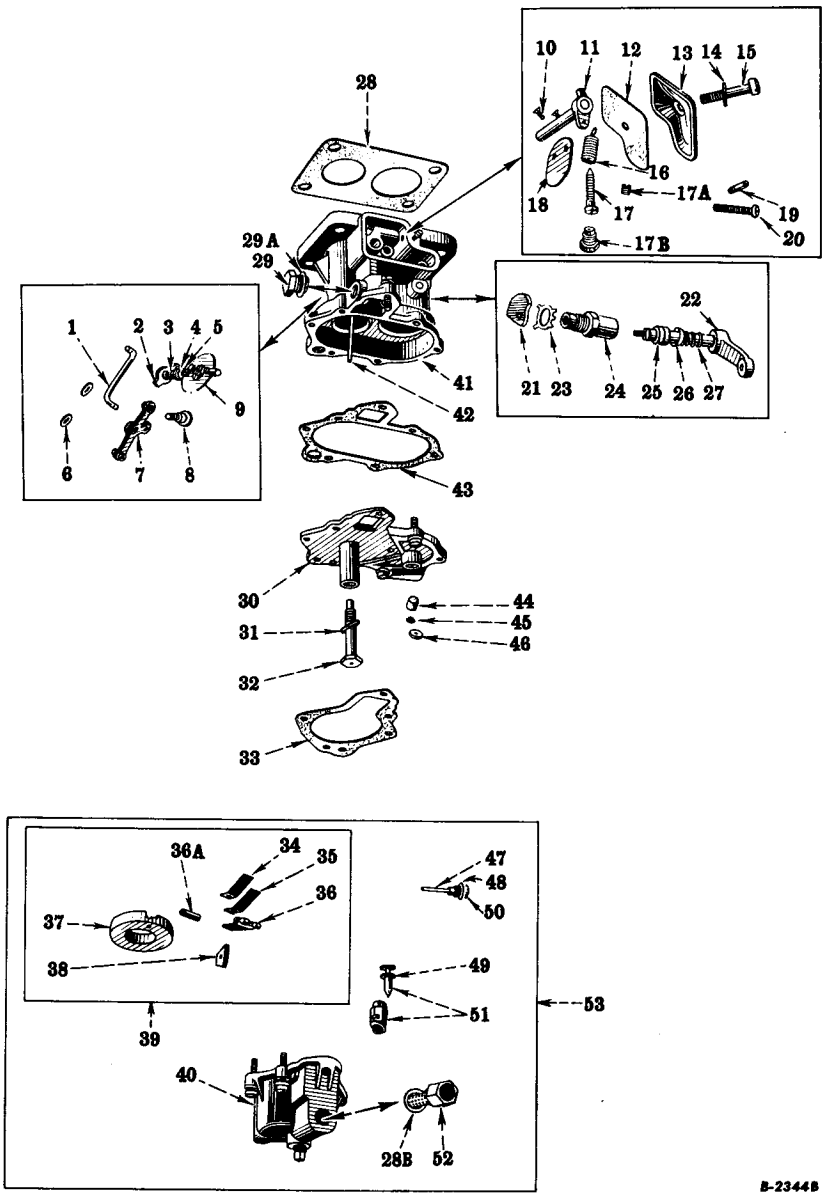

Reference numbers only are shown in illustration. Use I H part numbers in ordering.
Unnumbered parts in the illustrations are the same as corresponding parts shown with numbers.

CARBURETOR

International Model C-12, 1¼"
(For Starting on Gasoline)

	251 414 R92	Carburetor, Complete	1
	114 494	Hex Nut, 3/8" N.F.	4
	103 321	Lock Washer, 3/8"	4
	Q 1 597	Flat Washer, 13/32" I.D. x 3/4" O.D. x No. 16 Gauge	4
1	42 869 D	Bell Crank Connecting Rod	1
	112 726	Cotter Pin, 1/16 x 1/2" (Cadmium Plated)	2
2	42 863 D	Starting Shutter Shaft with Lever	1
3	27 452 D	Starting Shutter Shaft Packing Spring	1
4	32 590 D	Starting Shutter Shaft Packing Retainer	1

REF. NO.	PART NUMBER	DESCRIPTION	SERIAL NUMBER	NO. REQ'D
		CARBURETOR—Continued International Model C-12, 1¼" (For Starting on Gasoline)		
5	14 581 D	Starting Shutter Dust Packing		2
6	32 592 D	Bell Crank Connecting Rod Washer		2
7	42 867 D	Starting Lever Bell Crank		1
8	42 868 D	Bell Crank Fulcrum Screw		1
9	32 589 DX	Starting Shutter with Valve		1
10	14 971 D	Butterfly Screw		2
11	32 602 DAX	Throttle Shaft with Lever (Will Work for 3 226 DB)		1
12	32 607 DA	Throttle Lever Cover Gasket		1
	131 693	Screw, No. 8 - 32 x 3/8" Fillister Head (Cadmium Plated)		1
13	32 608 D	Throttle Lever Cover		1
14	32 610 D	Throttle Cover Clamp Screw Gasket		1
15	32 609 D	Throttle Cover Clamp Screw		1
16	27 435 D	Throttle Lever Spring		1
17	27 436 D	Throttle Spring End	TDRM 22001 to 23919	1
17	354 766 R1	Throttle Spring Screw	TDRM 23920 Up	1
17A	354 767 R1	Throttle Spring Screw Lock	TDRM 23920 Up	1
17B	354 768 R1	Throttle Spring Screw Plug	TDRM 23920 Up	1
18	32 601 D	Throttle Butterfly		1
19	32 599 D	Throttle Stop Pin		1
20	32 600 D	Throttle Stop Screw	TDRM 22001 to 23919	2
	131 963	Machine Screw, 8 x 32 x 3/8" Fillister Head		1
21	32 582 D	Locking Shaft Cam		1
22	42 871 D	Locking Shaft with Lever		1
23	352 352 R1	Locking Shaft Bearing Lock (Will Work for 58 836 D)		1
24	32 585 DA	Locking Shaft Bearing		1
25	32 588 D	Locking Shaft Dust Washer		2
26	32 587 D	Locking Shaft Dust Washer Retainer		1
27	32 586 D	Locking Shaft Dust Washer Spring		1
28	42 769 D	Carburetor Gasket		1
28B	18 377 D	Strainer Screen Gasket		1
29	42 844 D	Locking Shaft Body Plug		1
29A	18 377 D	Locking Shaft Body Plug Gasket		1
30	5 975 DX	Carburetor Bottom Plate with Filler, 27 445 DB		
		and Plug, 57 957 D		1
	132 198	Machine Screw, 12 x 24 x 3/4" Fillister Head		
		(Cadmium Plated)		3
	121 744	Lock Washer, 12 (Cadmium Plated)		3
31	32 615 D	Metering Well Gasket		1
32	32 616 D	Metering Well		1
33	32 606 DA	Fuel Bowl Gasket		1
34	32 578 D	Float Lever Spring Upper Leaf		1
35	32 577 D	Float Lever Spring Lower Leaf		1

REF. NO.	PART NUMBER	DESCRIPTION	SERIAL NUMBER	NO. REQ'D
		CARBURETOR—Continued **International Model C-12, 1¼"** **(For Starting on Gasoline)**		
36	251 651 R1	Float Lever (Order 251 652 R91)		1
36A	32 604 D	Float Lever Spacer		1
37	251 650 R11	Float, Complete		1
		(Composed of:		
		1 Ferrule §32 573 D		
		1 Plate 32 574 DA		
		1 Screw 132 646		
		1 Float §251 650 R1		
		1 Nut 114 777)		
38	32 574 DA	Float Reinforcing Plate		1
	132 646	Slotted Screw, No. 4 - 40 x 1/2" Round Head		1
	114 777	Hex Nut, No. 4 - 40		1
39	251 652 R91	Float and Lever, Complete		1
		(Composed of:		
		1 Spring 32 577 D		
		1 Spring 32 578 D		
		1 Float 251 650 R11		
		1 Lever §251 651 R1)		
40	5 051 DX	Fuel Bowl with Spacer, 32 604 D (Optional with 9 390 DX)		1
	132 198	Screw, No. 12 - 24 x 3/4" Fillister Head (Cadmium Plated)		1
	132 208	Screw, No. 12 - 24 x 1" Fillister Head (Cadmium Plated)		4
	121 744	Lock Washer No. 12 (Cadmium Plated)		5
	117 243	Pipe Plug, 1/8" Square Head (Cadmium Plated)		1
40	9 390 DX	Fuel Bowl with Spacer, 32 604 D (Will Work for 5 051 DX)		1
	132 208	Screw, No. 12 x 24 x 1" Fillister Head (Cadmium Plated)		4
	132 198	Screw, 12 x 24 x 3/4" Fillister Head (Cadmium Plated)		1
	117 243	Pipe Plug, 1/8" Square Head (Cadmium Plated)		1
	121 744	Lock Washer, No. 12		5
41	5 049 DBX32	Carburetor Body, Complete (Part of 354 774 R91)	TDRM 22001 to 23919	1
41	049 DAX32	Carburetor Body, Complete (Order 354 774 R91)	TDRM 22001 to 23919	1
		(Composed of:		
		1 Body §5 049 DA32		
		1 Plug §32 611 D		
		1 Bushing §32 612 D		
		1 Bushing §32 613 D		
		1 Tube 32 614 DX)		
41	354 769 R11	Carburetor Body with Tube, 32 614 DX	TDRM 23920 Up	1
42	32 614 DX	Idling Tube with Plug		1
43	32 597 D	Carburetor Bottom Plate Gasket		1

§ - Not Supplied Separately.

REF. NO.	PART NUMBER	DESCRIPTION	SERIAL NUMBER	NO. REQ'D
		CARBURETOR—Continued International Model C-12, 1¼" (For Starting on Gasoline)		
44	27 445 DAX	Drip Hole Filler with Screen (Order 60 947 D)		1
44	27 445 DB	Drip Hole Filler (Order 60 947 D)		1
44	60 947 D	Drip Hole Filler Plug Replacement Service Package		
		(Will Work for 27 445 DAX and 27 745 DB)		1
45	39 826 D	Drip Hole Screen (Order 60 947 D)		1
46	57 957 D	Drip Hole Plug (Will Work for 27 444 D)		1
47	24 672 D	Float Lever Pivot (Order 32 576 DX)		1
48	25 948 D	Float Lever Pivot Screw Gasket		1
49	25 948 D	Needle Valve Cage Gasket		1
50	32 576 DX	Float Pivot Screw with Pivot, 24 672 D		
		(Will Work for 24 672 D)		1
51	32 581 DBX	Needle Valve Cage with Gasket, 25 948 D and Needle Valve		1
52	29 902 DX	Strainer Screen Retainer with Screen		1
53	35 691 DX	Fuel Bowl, Complete with Float, Needle Valve Cage		
		and Adapter, 24 691 D		1
	24 691 D	Fuel Bowl Strainer Screen Adapter		1
	58 835 D	Primer Connection Hole Plug		1
	354 774 R91	Carburetor Body Service Package		
		(Will Work for 5 049 DAX32)	TDRM 22001 to 23919	1
		(Composed of:		
		1 Body 5 049 DBX32		
		1 Screw 354 766 R1		
		1 Lock 354 767 R1		
		1 Plug 354 768 R1		
		1 Cork 104 942)		
	104 942	Primer Hole Cork		1

MEMORANDA

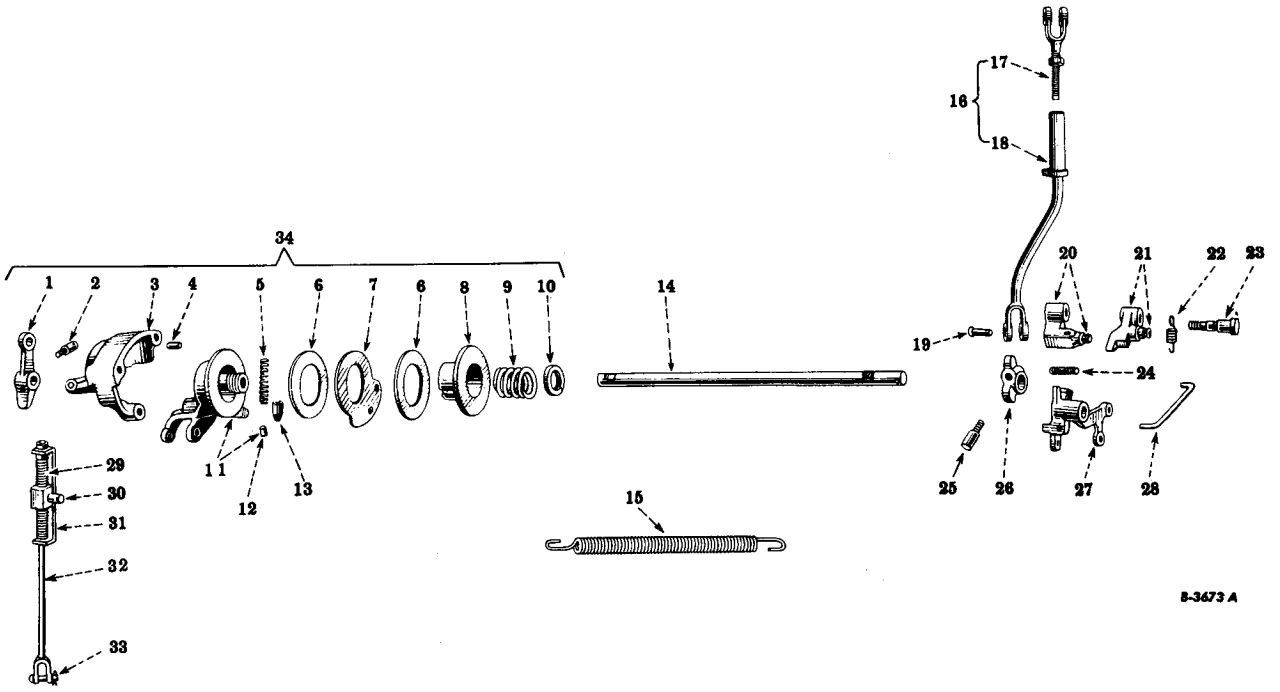

Reference numbers only are shown in illustration. Use I H part numbers in ordering.
Unnumbered Parts in the illustration are the same as corresponding parts shown with numbers.

STARTING MECHANISM AND GOVERNOR CONTROL

1	58 123 D	Cross Shaft Operating Lever	1
2	20 586 D	Cross Shaft Operating Lever Pin	1
	103 025	Hex Nut, 5/16" N.F.	2
	103 320	Lock Washer, 5/16"	2
3	9 446 DAX	Cross Shaft Bracket with Pin, 45 391 D	1
4	45 391 D	Governor Control Friction Plate Locating Pin	1
5	64 545 D	Low Idle Poppet Spring	1
6	48 356 D	Governor Control Friction Disc	2
7	64 543 D	Governor Control Friction Plate	1
8	6 649 D	Governor Control Friction Disc Retainer, Inner	1
9	48 358 D	Governor Control Friction Spring	1
10	48 359 D	Governor Control Friction Spring Nut	1
11	254 460 R11	Governor Control Lever with Dowel, 25 115 D	1
12	25 115 D	Governor Control Dowel Pin	1
13	64 544 D	Low Idle Poppet	1
14	56 460 D	Control Cross Shaft	1
15	52 176 DC	Cross Shaft Return Spring	1
16	251 480 R91	Cross Shaft Operating Rod with Rod, 251 433 R91 and	
		Rod, 251 438 R91	1
17	251 438 R91	Starting Valve Cross Shaft Operating Rod,	
		Upper with 5/16" Rod End Clevis	1
	103 025	Hex Nut, 5/16" N.F.	1

REF. NO.	PART NUMBER	DESCRIPTION	SERIAL NUMBER	NO. REQ'D
		STARTING MECHANISM AND GOVERNOR CONTROL—Continued		
18	251 433 R91	Starting Valve Cross Shaft Operating Rod		1
19	103 495	Cross Shaft Operating Rod Pin (Will Work for 19 306 D)		2
	107 762	Cotter Pin, 3/32 x 5/8"		1
20	8 617 DAX	Cross Shaft Latch Bracket with Pin		1
	102 845	Set Screw, 3/8 x 1-1/2" N.C. Flat Point		1
	218 438	Hex Nut, 3/8"		1
21	52 621 DX	Cross Shaft Latch with Pin		1
22	52 624 D	Cross Shaft Latch Spring		1
23	55 354 DA	Cross Shaft Latch Pin		1
24	102 833	Follows Reference No. 27		
25	20 586 D	Cross Shaft Jaw Lever Pin		1
26	52 626 D	Cross Shaft Jaw Lever		1
27	8 721 D	Cross Shaft Jaw		1
	102 833	Set Screw, 5/16 x 1-1/4" N.C. Headless, Flat Point		1
	218 437	Hex Nut, 5-1/16" N.C.		1
	103 345	Washer, 21/32" I.D. x 1" O.D. x No. 12 Gauge (Q 1 537)		1
	103 385	Cotter Pin, 1/8 x 1"		
28	56 463 D	Carburetor Control Rod		1
	137 130	Cotter Pin, 1/16 x 7/16"		2
29	64 996 D	Governor Control Rod Spring		2
30	262 557 R11	Governor Control Rod Trunnion (Will Work for 42 981 DA)		1
	107 762	Cotter Pin, 3/32 x 5/8"		1
	103 341	Washer, 13/32" I.D. x 13/16" O.D. x No. 16 Gauge (Q 1 597)		1
31	54 124 D	Governor Control Rod Trunnion Guide		1
32	58 150 DX	Governor Control Rod with End	TDRM 22001 to 22875	1
	114 493	Hex. Nut, 5/16" N.F.		2
32	260 723 R11	Governor Control Rod with End	TDRM 22876 Up	1
33	103 495	Governor Control Rod Pin (Will Work for 19 306 D)		1
33	260 722 R1	Governor Control Rod Pin	TDR 22876 Up	1
34	254 459 R91	Governor Control, Complete		1
		(Composed of:		
		1 Retainer 6 649 D		
		1 Bracket 9 446 DAX		
		2 Disc— 48 356 D		
		1 Spring 48 358 D		
		1 Nut 48 359 D		
		1 Poppet 64 543 D		
		1 Poppet 64 544 D		
		1 Spring 64 545 D		
		1 Lever 254 460 R11)		

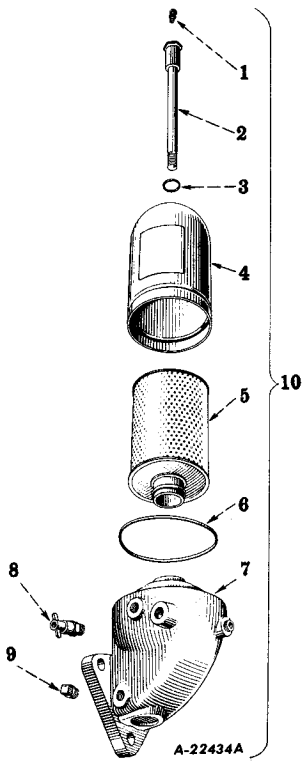

FUEL FILTER (Single)
(TDRM 22001 to 22875)

Reference numbers only are shown in illustration. Use I H part numbers in ordering.

REF. NO.	PART NUMBER	DESCRIPTION	SERIAL NUMBER	NO. REQ'D
		FUEL FILTER (Single) (TDRM 22001 to 22875)		
1	39 677 D	Fuel Filter Bleeder		1
2	259 485 R91	Fuel Filter Case Stud		1
3	13 839	Fuel Filter Case Stud Gasket		1
4	28 772 D	Fuel Filter Case		1
5	259 480 R92	Fuel Filter Element		1
6	13 841 D	Fuel Filter Case Gasket		1
7	250 701 R12	Fuel Filter Base		1
	103 883	Pipe Plug, 1/8" Slotted Headless		1
	103 884	Pipe Plug, 1/4" Slotted Headless		1
8	9 982 T	Fuel Filter Drain Cock		1
9	103 878	Pipe Plug, Square Head, 1/4"		1
10	259 633 R91	Fuel Filter, Complete		1
		(Composed of:		
		1 Gasket 13 839 D		
		1 Gasket 13 841 D		
		1 Case 28 772 D		
		1 Bleeder 39 677 D		
		1 Base 250 701 R12		
		1 Element 259 480 R92		
		1 Stud 259 485 R91)		
	179 885	Cap Screw, 1/2 x 1-1/2" N.C. Hex Head		3
	103 323	Lock Washer, 1/2"		3
	260 910 R91	Dual Fuel Filter Service Package	TDRM 22001 to 22875	
		(Composed of:		
		1 Connector 22 507 D		
		2 Elbow 37 323 DX		
		1 Connector 38 026 DM		
		1 Elbow 260 304 R1		
		1 Spacer 260 711 R1		
		1 Filter (Dual) 260 712 R91		
		1 Pipe 260 736 R11		
		1 Pipe 260 737 R11		
		1 Pipe 260 738 R21		
		1 Pipe 260 838 R11		
		1 Pipe 260 906 R11		
		3 Cap Screw 179 897		
		3 Lock Washer 103 323.		
		1 Installation Pamphlet 1 004 718 R1)		

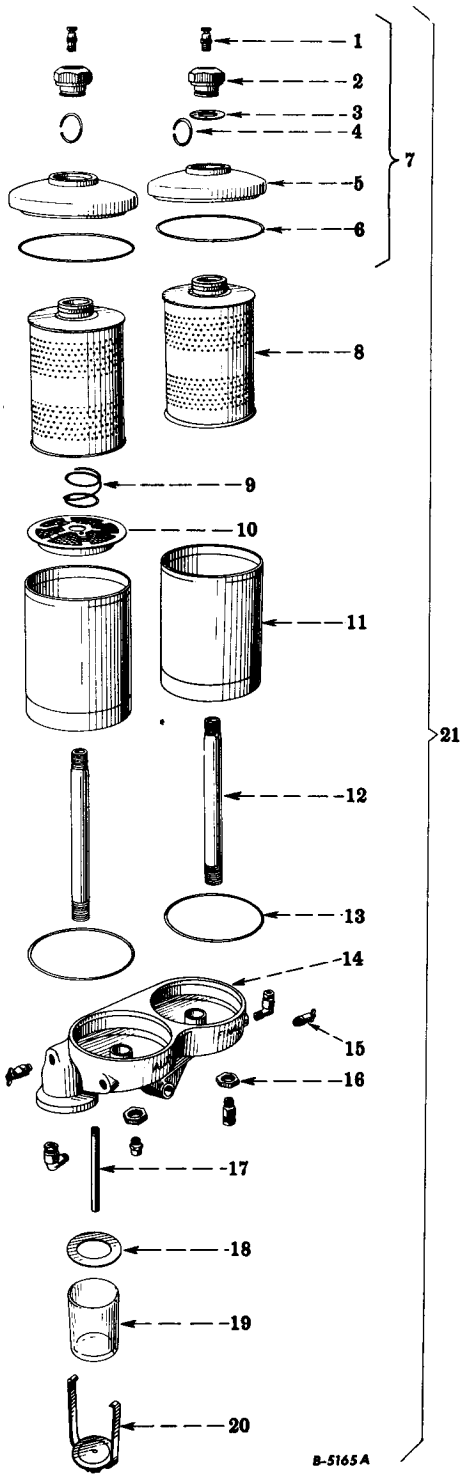

FUEL FILTERS (Dual)
(TDRM 22876 up)

Reference numbers only are shown in illustration. Use I H part numbers in ordering.
Unnumbered parts in the illustrations are the same as corresponding parts shown with numbers.

REF. NO.	PART NUMBER	DESCRIPTION	SERIAL NUMBER	NO. REQ'D
		FUEL FILTERS (Dual) (TDRM 22876 up)		
1	39 677 D	Fuel Filter Bleeder		2
2	260 703 R2	Fuel Filter Cover Nut		2
3	261 525 R1	Fuel Filter Cover Nut Gasket (Will Work for 260 704 R1)		2
4	260 705 R1	Fuel Filter Cover Nut Retaining Ring		2
5	261 192 R91	Fuel Filter Case Cover (Will Work for 260 702 R1)		2
6	260 839 R1	Fuel Filter Case Cover Gasket		2
7	261 193 R91	Fuel Filter Case Cover, Complete (Will Work for 260 702 R11)		2
8	259 480 R92	Fuel Filter Element		2
9	260 707 R1	Water Separator Screen Spring		1
10	260 706 R91	Water Separator Screen		1
11	260 699 R1	Fuel Filter Case		2
12	260 700 R1	Fuel Filter Case Stud		2
13	260 710 R2	Fuel Filter Case Seal Ring		2
14	260 698 R21	Fuel Filter Base with 2 Studs, 260 700 R1		1
15	9 982 T	Fuel Filter Drain Valve		2
16	260 701 R1	Fuel Filter Case Stud Lock Nut		2
17	260 709 R1	Water Trap Drain Pipe		1
18	260 708 R1	Water Trap Bowl Gasket		1
19	60 877 D	Water Trap Glass		1
20	60 878 DX	Water Trap Bail		1
21	260 712 R91	Fuel Filter, Complete		1
	179 897	Cap Screw, 1/2 x 4" N.C. Hex Head		3
	103 323	Lock Washer, 1/2"		3

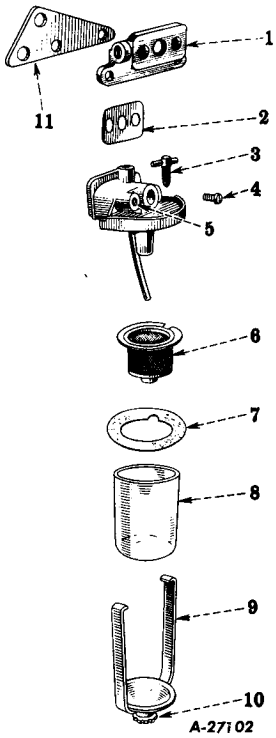

WATER TRAP AND CONNECTIONS
(TDRM 22001 to 22875)

Reference numbers only are shown in illustration. Use I H part numbers in ordering.

REF. NO.	PART NUMBER	DESCRIPTION	SERIAL NUMBER	NO. REQ'D
		WATER TRAP AND CONNECTIONS (TDRM 22001 to 22875)		
	251 355 R91	Water Trap, Complete		1
		(Composed of:		
		1 Screw 60 871 DA		
		1 Glass 60 877 D		
		1 Bail 60 878 DX		
		1 Screw 251 347 R11		
		1 Screen 251 348 R91		
		1 Gasket 251 352 R1		
		1 Top 251 380 R91)		
	179 893	Cap Screw, 1/2 x 3" N.C. Hex Head		1
	103 323	Lock Washer, 1/2"		1
1	251 749 R91	Water Trap Bracket		1
	179 839	Cap Screw, 3/8 x 1" N.C. Hex Head		2
	103 323	Lock Washer, 3/8"		2
2	51 527 DB	Water Trap Bracket Gasket		1
3	60 871 DA	Water Trap Vent Screw		1
4	251 347 R11	Water Trap Drain Screw with Handle		1
5	251 380 R91	Water Trap Top with Plug, 24 805 D		1
6	251 348 R91	Water Trap Screen with Top and Bottom		1
7	251 352 R1	Water Trap Bowl Gasket		1
8	60 877 D	Water Trap Glass Bowl		1
9	60 878 DX	Water Trap Bail with Screw, 60 882 DX		1
10	60 882 DX	Water Trap Thumb Screw with Head and Shank		1
11	259 458 R1	Water Trap Adapter Plate		1
	24 805 D	Expansion Plug, 3/8"		1

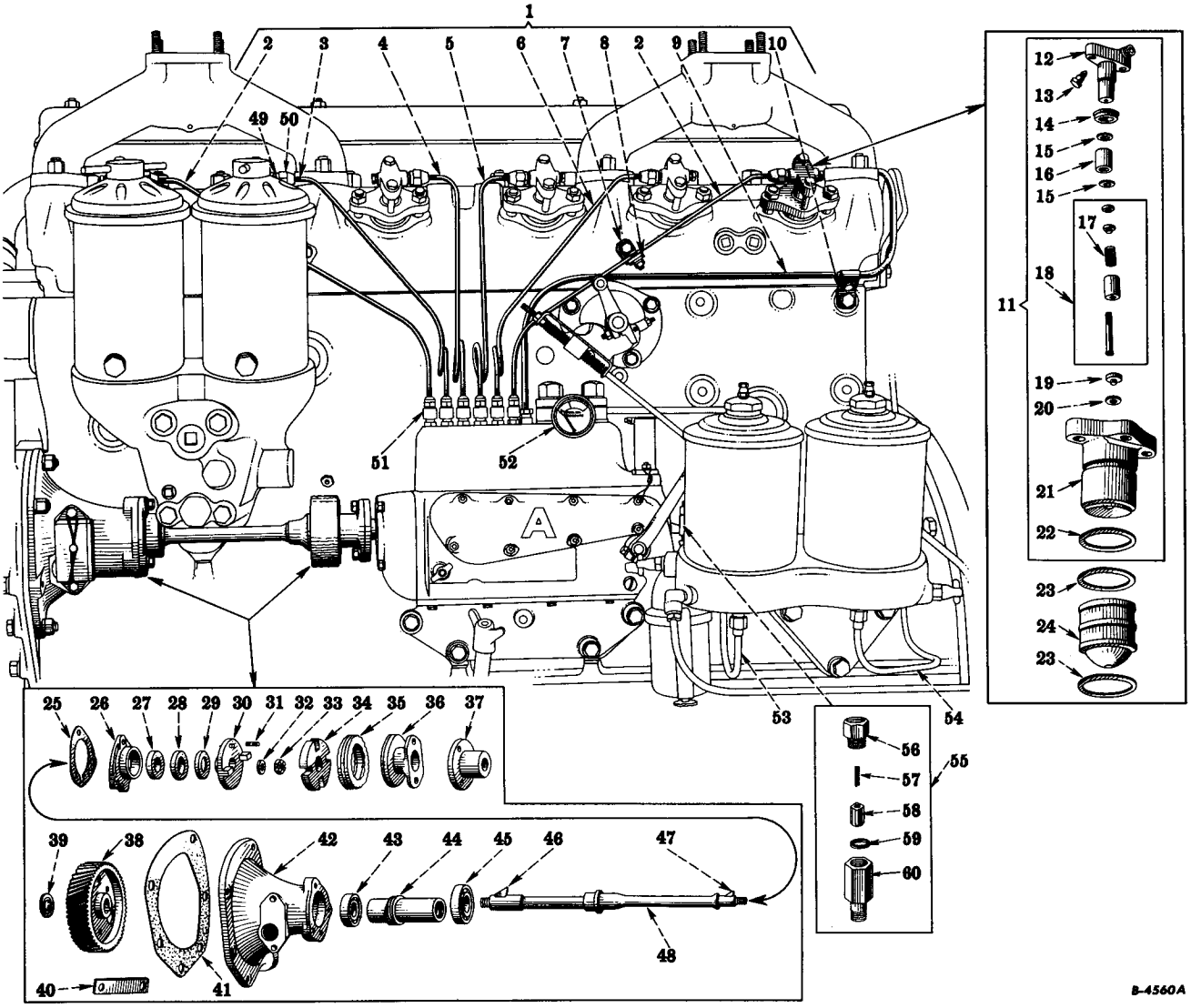

FUEL INJECTION PUMP DRIVE, INJECTION PIPES AND NOZZLES

Reference numbers only are shown in illustration. Use I H part numbers in ordering.
Unnumbered parts in the illustrations are the same as corresponding parts shown with numbers.

REF. NO.	PART NUMBER	DESCRIPTION	SERIAL NUMBER	NO. REQ'D
		FUEL INJECTION PUMP DRIVE, INJECTION PIPES AND NOZZLES		
1	254 451 R92	Set of Six Injection Pipes, Complete		
		(Less Ref. Nos. 7 and 8)	TDRM 22001 to 22537	1
		(Composed of:		
		2 Pipe 254 411 R12		
		1 Pipe 254 412 R12		
		1 Pipe 254 413 R12		
		1 Pipe 254 414 R12		
		1 Pipe 254 415 R12)		
1	262 647 R91	Set of Six Injection Pipes, Complete	TDRM 22538 Up	1
		(Composed of:		
		2 Pipe 259 897 R11		
		1 Pipe 259 898 R11		
		1 Pipe 259 899 R11		
		1 Pipe 259 900 R11		
		1 Pipe 259 901 R11)		
2	254 411 R12	Injection Pipes, Cylinders No. 1 and 6, Complete	TDRM 22001 to 22537	2
		(Composed of:		
		1 Block §27 926 DA		
		2 Sleeve 250 610 R2		
		1 Nut 250 617 R1		
		1 Nut 251 050 R1		
		1 Cap §251 051 R1		
		1 Pipe §254 411 R1		
		1 Pipe Diagram 1 004 574 R1)		
	103 025	Hex Nut, 5/16" N.F.		2
	103 320	Lock Washer, 5/16"		2
2	259 897 R11	Injection Pipes, Cylinders No. 1 and 6, Complete	TDRM 22538 Up	2
		(Composed of:		
		1 Block §27 926 DA		
		2 Sleeve 250 610 R2		
		1 Nut 250 617 R1		
		1 Nut 251 050 R1		
		1 Cap 251 051 R1		
		1 Pipe §259 897 R1		
		1 Pipe Diagram 1 004 736 R1)		
3	254 412 R12	Injection Pipe, Cylinder No. 2, Complete	TDRM 22001 to 22537	1
		(Composed of:		
		2 Sleeve 250 610 R2		
		1 Nut 250 617 R1		
		1 Nut 251 050 R1		
		1 Cap §251 051 R1		
		1 Pipe §254 412 R1		
		1 Pipe Diagram 1 004 574 R1)		
3	259 898 R11	Injection Pipe, Cylinder No. 2, Complete	TDRM 22538 Up	1
		(Composed of:		
		2 Sleeve 250 610 R2		
		1 Nut 250 617 R1		
		1 Nut 251 050 R1		
		1 Cap 251 051 R1		
		1 Pipe §259 898 R1		
		1 Pipe Diagram 1 004 736 R1)		

§ - Not Supplied Separately.

REF. NO.	PART NUMBER	DESCRIPTION	SERIAL NUMBER	NO. REQ'D
		FUEL INJECTION PUMP DRIVE, INJECTION PIPES AND NOZZLES—Continued		
4	254 413 R12	Injection Pipe, Cylinder No. 3, Complete	TDRM 22001 to 22537	1
		(Composed of:		
		2 Sleeve 250 610 R2		
		1 Nut 250 617 R1		
		1 Nut 251 050 R1		
		1 Cap §251 051 R1		
		1 Pipe §254 413 R1		
		1 Pipe Diagram 1 004 574 R1)		
4	259 900 R11	Injection Pipe, Cylinder No. 3, Complete	TDRM 22538 Up	1
		(Composed of:		
		2 Sleeve 250 610 R2		
		1 Nut 250 617 R1		
		1 Nut 251 050 R1		
		1 Cap 251 051 R1		
		1 Pipe §259 900 R1		
		1 Pipe Diagram 1 004 736 R1)		
5	254 414 R12	Injection Pipe, Cylinder No. 4, Complete	TDRM 22001 to 22537	1
		(Composed of:		
		2 Sleeve 250 610 R2		
		1 Nut 250 617 R1		
		1 Nut 251 050 R1		
		1 Cap §251 051 R1		
		1 Pipe §254 414 R1		
		1 Pipe Diagram 1 004 574 R1)		
5	259 901 R11	Injection Pipe, Cylinder No. 4, Complete	TDRM 22538 Up	1
		(Composed of:		
		2 Sleeve 250 610 R1		
		1 Nut 250 617 R1		
		1 Nut 251 050 R1		
		1 Cap 251 051 R1		
		1 Pipe §259 901 R1		
		1 Pipe Diagram 1 004 736 R1)		
6	254 415 R12	Injection Pipe, Cylinder No. 5, Complete	TDRM 22001 to 22537	1
		(Composed of:		
		2 Sleeve 250 610 R2		
		1 Nut 250 617 R1		
		1 Nut 251 050 R1		
		1 Cap §251 051 R1		
		1 Pipe §254 415 R1		
		1 Pipe Diagram 1 004 574 R1)		
6	259 899 R11	Injection Pipe, Cylinder No. 5, Complete	TDRM 22538 Up	1
		(Composed of:		
		2 Sleeve 250 610 R2		
		1 Nut 250 617 R1		
		1 Nut 251 050 R1		
		1 Cap 251 051 R1		
		1 Pipe §259 899 R1		
		1 Pipe Diagram 1 004 736 R1)		

§ - Not Supplied Separately.

REF. NO.	PART NUMBER	DESCRIPTION	SERIAL NUMBER	NO. REQ'D
		FUEL INJECTION PUMP DRIVE, INJECTION PIPES AND NOZZLES—Continued		
7	254 416 R2	Injection Pipe Brace		2
	179 837	Cap Screw, 3/8 x 3/4" N.C. Hex Head		2
	103 321	Lock Washer, 3/8"		2
8	27 927 DA	Injection Pipe Brace Washer		2
9	254 423 R11	Injection Pump Breather Pipe with 2 Nuts, 37 165 D		1
10	254 424 R1	Injection Pump Breather Pipe Clip		1
	179 879	Cap Screw, 1/2 x 3/4" N.C. Hex Head,		1
	113 974	Slotted Screw, 1/4 x 3/8" Round Head		1
	105 604	Nut, 1/4" N.C.		1
	103 319	Lock Washer, 1/4"		1
	103 323	Lock Washer, 1/2"		1
11	251 079 R92	Injection Nozzle, Complete		6
		(Composed of:		
		1 Valve	32 493 D	
		2 Gasket	37 148 D	
		1 Spacer	37 150 D	
		1 Valve and Spring	37 152 DA	
		1 Plate	250 604 R2	
		1 Gasket	37 148 D	
		1 Fitting	§250 607 R2	
		1 Fitting	250 607 R21	
		1 Body	251 043 R11	
		2 Cap Screw	181 380)	
12	250 607 R21	Nozzle Fitting with Seal, 250 608 R1		6
	181 380	Capscrew, 3/8 x 2-1/2" N.F. Hex Head		2
13	32 493 D	Nozzle Bleeder Valve		6
14	250 608 R1	Nozzle Fitting Dust Seal		6
15	37 148 D	Nozzle Valve Gasket		12
16	37 150 D	Nozzle Valve Spacer		6
17	37 146 DA	Nozzle Valve Spring		6
18	37 152 DA	Nozzle Valve and Spring, Complete		6
		(Composed of:		
		1 Valve	§37 144 DA	
		1 Guide	§37 145 D	
		1 Spring	37 146 DA	
		2 Nut	§37 147 D)	
19	250 604 R2	Nozzle Injector Plate		6
20	37 148 D	Nozzle Injector Plate Gasket (Will Work for 250 605 R1)		6
21	251 043 R11	Nozzle Body with Seal, 250 608 R1 and Seal, 251 044 R1		6
22	251 044 R1	Nozzle Body Dust Seal		6
23	251 042 R2	Pre-Combustion Chamber Gasket		12
24	251 041 R1	Pre-Combustion Chamber		6
25	32 342 DB	Injection Pump Drive Housing Cap Gasket		1

§ - Not Supplied Separately.

REF. NO.	PART NUMBER	DESCRIPTION	SERIAL NUMBER	NO. REQ'D
		FUEL INJECTION PUMP DRIVE, INJECTION PIPES AND NOZZLES—Continued		
26	5 006 DAX	Injection Pump Drive Shaft Housing Cap, Complete		1
		(Composed of:		
		1 Cap §5 006 DA		
		1 Seal 12 480 L		
		1 Felt 32 362 D		
		1 Retainer 32 343 D)		
	179 841	Cap Screw, 3/8 x 1-1/4" N.C. Hex Head		3
	103 321	Lock Washer, 3/8"		3
27	12 480 L	Injection Pump Drive Oil Seal		1
28	32 362 D	Injection Pump Drive Felt		1
29	32 343 D	Injection Pump Drive Felt Retainer		1
30	254 421 R11	Injection Pump Drive Shaft Flange with Pin, G 3 836		1
31	G 3 836	Injection Pump Drive Shaft Dowel Pin		1
32	32 347 D	Injection Pump Drive Shaft Washer		1
33	102 647	Hex Nut, 1/2" N.F. (Castellated)		1
34	31 439 DB	Timing Coupling Spacer		1
35	31 441 D	Injection Pump Drive Coupling Boot		1
36	33 275 D	Timing Coupling Adjuster		1
	181 356	Cap Screw, 3/8 x 5/8" N.F. Hex Head		2
	103 323	Lock Washer, 3/8"		
37	254 240 R3	Injection Pump Drive Flange		1
38	25 362 D	Injection Pump Drive Gear, 54 Teeth		1
39	25 354 D	Injection Pump Drive Shaft Gear Nut Lock		1
40	32 341 D	Injection Pump Drive Housing Bolt Lock		1
41	32 340 DB	Injection Pump Drive Housing Gasket		1
42	5 005 DAX	Injection Pump Drive Housing		1
	179 881	Cap Screw, 1/2 x 1" N.C. Hex Head		2
	179 887	Cap Screw, 1/2 x 1-3/4" N.C. Hex Head		1
	181 435	Cap Screw, 1/2 x 1-7/8" N.F. Hex Head		2
	181 445	Cap Screw, 1/2 x 3-3/4" N.F. Hex Head		1
	103 028	Hex Nut, 1/2" N.F.		3
	103 323	Lock Washer, 1/2"		4
	172 558	Plug, 1-1/4"		1
43	ST 208 A	Injection Pump Drive Bearing, Front (IH PC 225)		
		(Will Work for 10 701 DA)		1
43	10 701 DA	Injection Pump Drive Bearing, Front (ND 7505)		
		(Optional with ST 208 A)		1
44	49 455 DX	Service Meter Drive Gear, 4 Teeth, with Spacer		1
45	ST 213	Injection Pump Drive Bearing, Rear (IH C 230)		
		(Will Work for 23 874 D)		1
45	23 874 D	Injection Pump Drive Bearing, Rear (ND 3206)		
		(Optional with ST 213)		1

§ - Not Supplied Separately.

REF. NO.	PART NUMBER	DESCRIPTION	SERIAL NUMBER	NO. REQ'D
		FUEL INJECTION PUMP DRIVE, INJECTION PIPES AND NOZZLES—Continued		
46	113 782	Injection Pump Drive Shaft Key (Woodruff No. 15, 1/4 x 1")		1
47	106 751	Injection Pump Drive Shaft Flange Key (Woodruff No. 9, 3/16 x 3/4")		1
48	32 345 DA	Injection Pump Drive Shaft		1
	102 647	Hex Nut, 1/2" N.F. (Castellated)		1
	114 499	Hex Jam Nut, 3/4" N.F.		1
	108 629	Cotter Pin, 3/32 x 7/8"		1
49	250 610 R2	Injection Pipe Sleeve		12
50	250 617 R1	Injection Pipe Nut (Nozzle End)		6
51	251 050 R1	Injection Pipe Nut (Pump End)		16
52	260 390 R91	Fuel Pressure Gage with Dampener, 262 856 R1	TDRM 22884 Up	1
53	260 736 R11	Auxiliary Filter to Primary Pump Pipe with 2 Nuts and 2 Nipples	TDRM 22876 Up	1
54	260 738 R21	Final Filter to Injection Pump Pipe with 2 Nuts, 37 165 D	TDRM 24698 Up	1
55	260 757 R92	Scavenging Check Valve, Complete		1
		(Composed of:		
		1 Body 260 758 R1		
		1 Spring 260 759 R1		
		1 Gasket 260 760 R1		
		1 Fitting 260 761 R1		
		1 Valve 354 057 R2)		
56	260 758 R1	Scavenging Check Valve Body		1
57	260 759 R1	Scavenging Check Valve Spring		1
58	260 760 R1	Scavenging Check Valve Gasket		1
59	260 761 R1	Scavenging Check Valve Fitting		1
60	354 057 R2	Scavenging Check Valve		1
	16 518 D	Fuel Pipe Clamp	TDRM 24698 Up	2
	110 501	Slotted Screw, 10-24 x 5/8" Round Head		1
	110 634	Square Nut, 10-24		1
	106 497	Lock Washer, No. 10		1
	22 507 D	Auxiliary Filter to Primary Pump Pipe Connector (Filter End)	TDRM 22876 Up	1
	37 165 D	Primary Pump to Final Filter Pipe Nut	TDRM 22876 Up	2
	37 165 D	Final Filter to Injection Pump Pipe Nut	TDRM 22876 Up	3
	37 165 D	Primary Pump Inlet Pipe Connector Nut	TDRM 22876 Up	1
	37 323 DX	Primary Pump to Final Filter Pipe Elbow (Filter End)	TDRM 22876 Up	1
	38 026 DM	Primary Pump Inlet Pipe Connector	TDRM 22876 Up	1
	38 026 DMX	Final Filter to Injection Pump Pipe Connector, 38 026 DM with Nut, 37 165 D	TDRM 22876 Up	1
	251 051 R1	Injection Pipe Nut Cap		6
	251 112 R1	Fuel Tube Clamp Felt	TDRM 24698 Up	2
	260 304 R1	Street Elbow, 1/4" (Pump End)	TDRM 22876 Up	1
	260 737 R11	Primary Pump to Final Filter Pipe with 2 Nuts, 37165 D	TDRM 22876 Up	1
	262 856 R1	Fuel Pressure Gage Dampener	TDRM 22884 Up	1

MEMORANDA

	PART NUMBER	DESCRIPTION	SERIAL NUMBER	NO. REQ'D
		I.H. TWIN PLUNGER FUEL INJECTION PUMP		
	253 703 R91	Fuel Injection Pump, Complete (1350 R.P.M.)		
		(11% Regulation) (Standard) TD-18 Engines 22001		
		to 22593		1
	253 701 R91	Fuel Injection Pump, Complete (1350 R.P.M.)		
		(11% Regulation) (Standard) (See Note)		
		TD-18A Engines 22594 Up		1
	179 889	Cap Screw, 1/2 x 2" N.C. Hex Head		2
	179 887	Cap Screw, 1/2 x 1-3/4" N.C. Hex Head		2
	103 323	Lockwasner, 1/2"		4
		NOTE - Refer to - Injection Pump Parts Catalog PU-27.		
		When Ordering Letail Parts for Complete Injection		
		Pumps and also for Special Injection Pumps not		
		listed above. For Speed Charts see Injection		
		Pump Parts Catalog PU-27.		

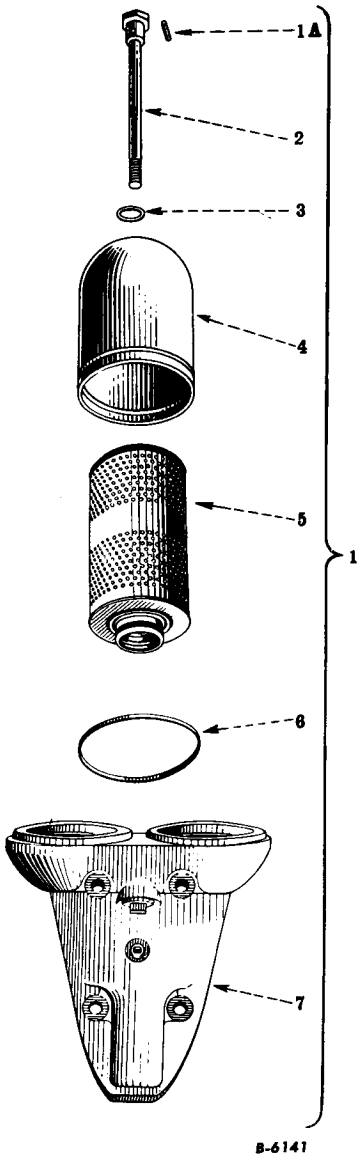

LUBRICATING OIL FILTER (Not Full Flow)
(TDRM 22001 to 25008)

Reference numbers only are shown in illustration. Use I H part numbers in ordering.

REF. NO.	PART NUMBER	DESCRIPTION	SERIAL NUMBER	NO. REQ'D
		LUBRICATING OIL FILTER (Not Full Flow) (TDRM 22001 to 25008)		
1	251 415 R91	Lubricating Oil Filter, Complete (Order 262 040 R91)		1
	187 201	Cap Screw, 1/2 x 4-3/4" N.C. Hex Head		2
	179 885	Cap Screw, 1/2 x 1-1/2" N.C. Hex Head		2
	103 323	Lock Washer, 1/2"		4
		(Composed of:		
		2 Gasket	13 839 D	
		2 Gasket	13 841 D	
		2 Case	13 842 D	
		2 Bar	46 606 DX	
		1 Base	251 275 R11	
		2 Element	257 867 R91)	
1A	G 6 579-1/3	Lubricating Oil Filter Case Retaining Bar Pin		2
2	46 606 DX	Lubricating Oil Filter Retaining Bar with Pin, G 6 579-1/3		2
3	13 839 D	Lubricating Oil Filter Retaining Bar Gasket		2
4	13 842 D	Lubricating Oil Filter Case		2
5	257 867 R91	Lubricating Oil Filter Element		2
6	13 841 D	Lubricating Oil Filter Case Gasket		2
7	251 275 R11	Lubricating Oil Filter Base with Plug, 103 879 and Plug, 444 660		1
	262 040 R91	Full Flow Lubricating Oil Filter Service Package		
		(Will Work for 251 415 R91)		
		(See Full Flow Lubricating Oil Filter)		1
		(Composed of:		
		1 Spring	261 960 R1	
		1 Filter	262 034 R91	
		1 Gasket	262 036 R1	
		1 Gauge	262 037 R11	
		2 Cap Screw	186 295	
		2 Cap Screw	187 152	
		4 Lock Washer	103 323	
		2 Decal	1 001 408 R2	
		1 Caution Tag	1 004 774 R2	
		1 Oil Pump Reworking Diagram	IZG 501	
		1 Crankcase Reworking Diagram	IZG 559)	
	103 879	Lubricating Oil Filter Base Plug, 3/8" Square Head		1
	444 660	Lubricating Oil Filter Base Plug, 3/8" Countersunk Head		1

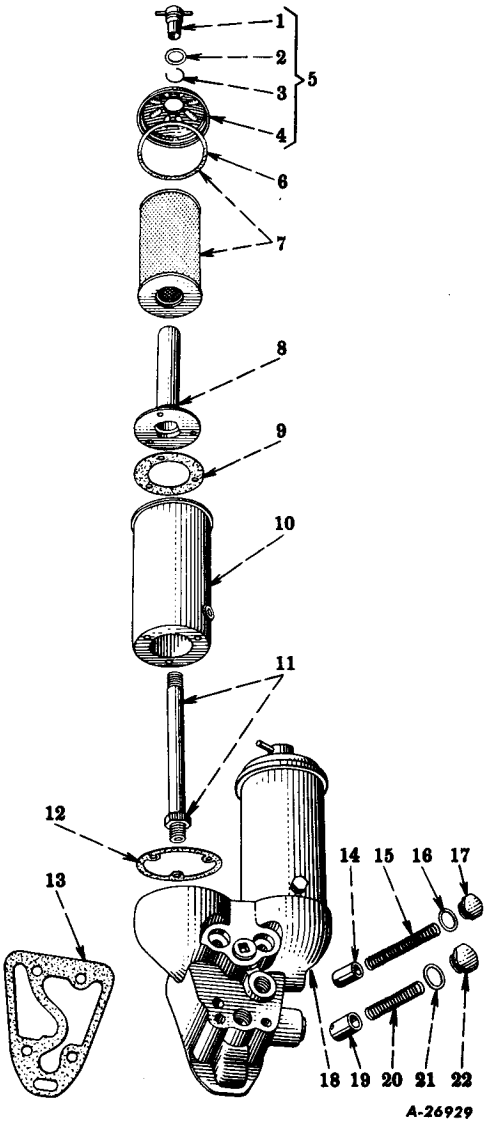

LUBRICATING OIL FILTER (Full Flow)
(TDRM 25009 up)

Reference numbers only are shown in illustration. Use I H part numbers in ordering.

REF. NO.	PART NUMBER	DESCRIPTION	SERIAL NUMBER	NO. REQ'D
		LUBRICATING OIL FILTER (Full Flow) (TDRM 25009 up)		
	262 034 R91	Full Flow Lubricating Oil Filter, Complete		
		(Consists of reference numbers 1 to 22 less reference		
		number 13)		1
1	261 621 R11	Lubricating Oil Filter Case Cover Retaining Nut		2
2	261 624 R1	Lubricating Oil Filter Case Cover Retaining Nut Gasket		2
3	48 512 D	Lubricating Oil Filter Case Cover Retaining Nut Snap Ring		2
4	261 620 R1	Lubricating Oil Filter Case Cover (Order 261 620 R11)		2
5	261 620 R11	Lubricating Oil Filter Case Cover, Complete		
		(Will Work for 261 620 R1)		2
6	261 626 R2	Lubricating Oil Filter Case Gasket		2
7	261 627 R91	Lubricating Oil Filter Element (Order 262 146 R91)		2
7	262 146 R91	Lubricating Oil Filter Element Service Package		
		(Consists of Element, 261 627 R91 with Gasket,		
		261 626 R2) (Will Work for 261 627 R91)		2
8	261 830 R11	Lubricating Oil Filter Standpipe		2
9	261 835 R1	Lubricating Oil Filter Standpipe Gasket		2
10	261 833 R11	Lubricating Oil Filter Case with Gasket, 105 453 and		
		Plug, 445 084		2
11	261 614 R11	Lubricating Oil Filter Case Stud with Nut, 218 445		2
12	261 836 R1	Lubricating Oil Filter Case Gasket		2
13	262 036 R1	Lubricating Oil Filter Base Gasket		1
14	261 611 R1	Lubricating Oil Pressure Regulating Valve		1
15	261 612 R1	Lubricating Oil Pressure Regulating Valve Spring		1
16	115 449	Follows Reference No. 17		
17	261 613 R1	Lubricating Oil Pressure Regulating Valve Retainer Nut		1
	115 449	Gasket, 1-1/8" Annular		1
18	262 035 R11	Lubricating Oil Filter Base with Plug, 103 876, Plug,		
		103 874 and Plug, 103 867		1
19	261 630 R1	Lubricating Oil Filter By-Pass Valve		1
20	260 234 R1	Lubricating Oil Filter By-Pass Valve Spring		1
21	28 781 D	Lubricating Oil Filter By-Pass Valve Retaining Nut Gasket		1
22	51 205 D	Lubricating Oil Filter By-Pass Valve Retaining Nut		1
	103 867	Lubricating Oil Filter Base Plug (3/8" Square Head)		1
	103 876	Lubricating Oil Filter Base Plug		
		(1" Countersunk Headless)		1
	105 453	Lubricating Oil Filter Case Drain Plug Gasket (5/8" Annular)		2
	218 445	Lubricating Oil Filter Case Stud Jam Nut (1" Plain Hex)		2
	445 084	Lubricating Oil Filter Case Drain Plug (5/8" - 18 Hex Head)		2

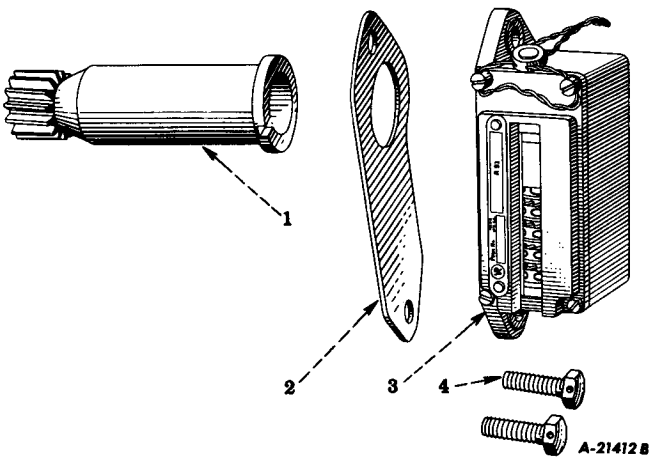

Reference numbers only are shown in illustration. Use I H part numbers in ordering.
Unnumbered Parts in the illustration are the same as corresponding parts shown with numbers.

SERVICE METER (Special)

	261 936 R91	Service Meter Attachment (Will Work for 260 763 R91)	1
		(Factory Application - Order on Machine Order Form)	
		(Field Application - Order through Regular Service	
		Parts Channels)	
1	261 925 R91	Service Meter Driven Gear, 15 Teeth	
		(Will Work for 49 454 D)	1
2	49 451 DA	Service Meter Gasket	1
3	261 605 R91	Service Meter Beeder - Root No. V-73027-3	
		(Will Work for 49 450 DA)	1
4	23 086 D	Service Meter Cap Screw	2
	103 319	Lock Washer, 1/4"	2
	12 736 D	Service Meter Seal	1

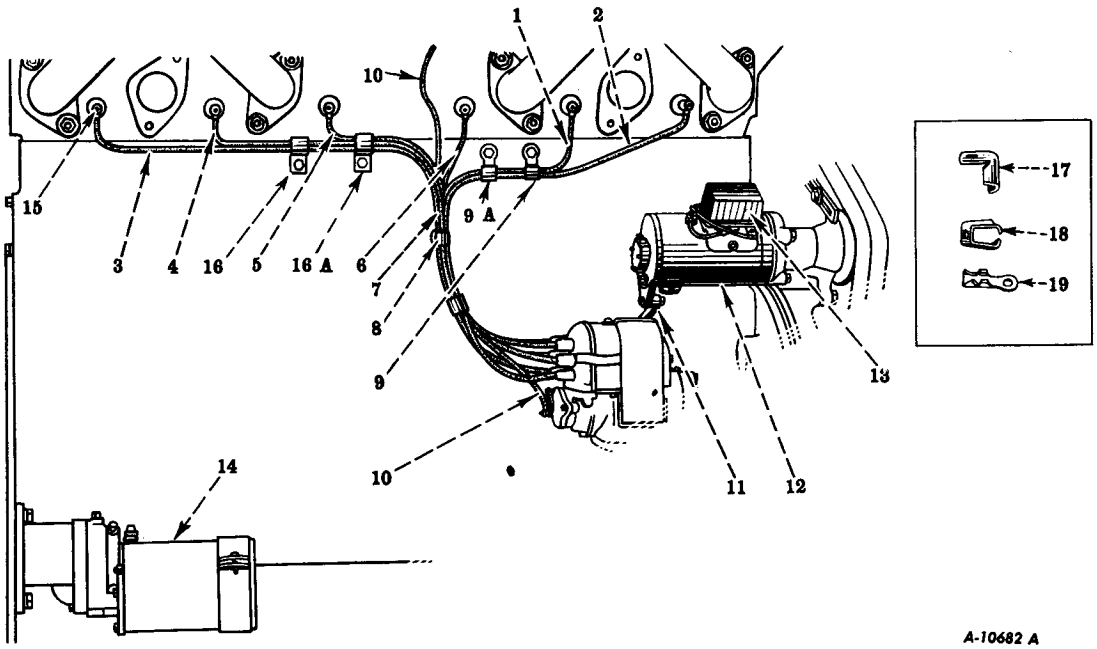

Reference numbers only are shown in illustration. Use I H part numbers in ordering.
Unnumbered Parts in the illustration are the same as corresponding parts shown with numbers.

SPARK PLUGS, CABLES, GENERATOR AND STARTING MOTOR

1	256 680 R11	Spark Plug Cable, No. 2 with Terminals, 37 291 D and 84 319 H			1
2	65 351 D	Spark Plug Cable, No. 1 with Terminals, 37 291 D and 84 319 H			1
3	256 681 R11	Spark Plug Cable, No. 6 with Terminals, 37 291 D and 84 319 H			1
4	65 338 D	Spark Plug Cable, No. 5 with Terminals, 37 291 D and 84 319 H			1
5	65 344 D	Spark Plug Cable, No. 4 with Terminals, 37 291 D and 84 319 H			1
6	65 344 D	Spark Plug Cable, No. 3 with Terminals, 37 291 D and 84 319 H			1
7	251 439 R92	Set of Spark Plug Cables			1
		(Composed of:			
		1	Cable	65 338 D	
		1	Cable	65 344 D	
		1	Cable	65 344 D	
		1	Cable	65 351 D	
		1	Cable	251 474 R21	
		1	Tape	251 477 R1	
		1	Cable	256 680 R11	
		1	Cable	256 681 R11	
		2	Tape	257 055 R1	
		1	Tape	257 056 R1	
		2	Tape	257 057 R1	
		1	Marker	§353 820 R1	
		1	Marker	§353 821 R1	
		1	Marker	§353 822 R1	
		1	Marker	§353 823 R1	
		1	Marker	§353 824 R1	
		1	Marker	§353 825 R1)	

§ - Not Supplied Separately.

REF. NO.	PART NUMBER	DESCRIPTION	SERIAL NUMBER	NO. REQ'D
		SPARK PLUGS, CABLES, GENERATOR AND STARTING MOTOR—Continued		
8	39 749 DA	Spark Plug Cable, Assembly Clip		1
	179 793	Cap Screw, 1/4 x 5/8" N.C. Hex Head		1
	179 835	Cap Screw, 3/8 x 5/8" N.C. Hex Head		1
	103 319	Lock Washer, 1/4"		1
	103 321	Lock Washer, 3/8"		1
	220 064	Hex Nut, 1/4" N.C.		1
9	27 387 D	Spark Plug Cable Clip		2
9	56 278 D	Spark Plug Cable Clip, Front		1
	179 837	Cap Screw, 3/8 x 3/4" N.C. Hex Head		1
	103 321	Lock Washer, 3/8"		1
9A	255 478 R1	Spark Plug Cable Clip, Front Intermediate		1
10	251 474 R2	Magneto Short Circuiting Cable		1
10	251 474 R21	Magneto Short Circuiting Cable, Complete		1
		(Composed of:		
		1 Sleeve 28 500 H		
		2 Terminal 200 009		
		1 Cable 251 474 R2)		
11	5 992 D	Generator Bracket		1
	179 860	Cap Screw, 7/16 x 1-1/4" N.C. Hex Head		2
	103 322	Lock Washer, 7/16"		2
12	50 585 D	Generator (Delco-Remy 1101724) (See Wiring, Batteries, Etc.)		1
	181 342	Cap Screw, 5/16 x 1-3/8" N.F. Hex Head		1
	179 845	Cap Screw, 3/8 x 1-3/4" N.C. Hex Head		4
	103 025	Hex Nut, 5/16" N.F.		1
	103 320	Lock Washer, 5/16"		1
	103 321	Lock Washer, 3/8"		4
13	57 550 D	Cutout Relay (Delco-Remy No. 1116810)		1
14	42 999 D	Starting Motor (Delco-Remy Model 756) (See Wiring, Batteries, Etc.)		1
	181 429	Cap Screw, 1/2 x 1-1/4" N.F. Hex Head		2
	103 028	Hex Nut, 1/2"		1
	103 323	Lock Washer, 1/2"		3
15	262 454 R91	Spark Plug (Champion 44) (7/8" - 18 N.C.)		
		(Optional with 32 713 DC and 258 999 R92)		6
15	32 713 DC	Spark Plug (AC 18) (7/8" - 18 N.C.)		
		(Optional with 262 454 R91 and 258 999 R92)		6
15	258 999 R92	Spark Plug (Auto-Lite-TT-15)		
		(Optional with 262 454 R91 and 32 713 DC)		6
16	255 479 R1	Spark Plug Cable Clip, Rear		1
16A	56 277 D	Spark Plug Cable Clip, Rear Intermediate		1
17	84 319 H	Cable Terminal (Snap on Type, Spark Plug End of Spark Plug Cable)		6

REF. NO.	PART NUMBER	DESCRIPTION	SERIAL NUMBER	NO. REQ'D
		SPARK PLUGS, CABLES, GENERATOR AND STARTING MOTOR—Continued		
18	37 291 D	Spark Plug Cable Terminal		
		(Push Type Distributor End of Spark Plug Cable)		6
19	200 009	Magneto Short Circuiting Cable Terminal (At Magneto)		2
	28 500 H	Cable Terminal Sleeve		1
	251 553 R1	Distributor Cap Terminal Nipple		6

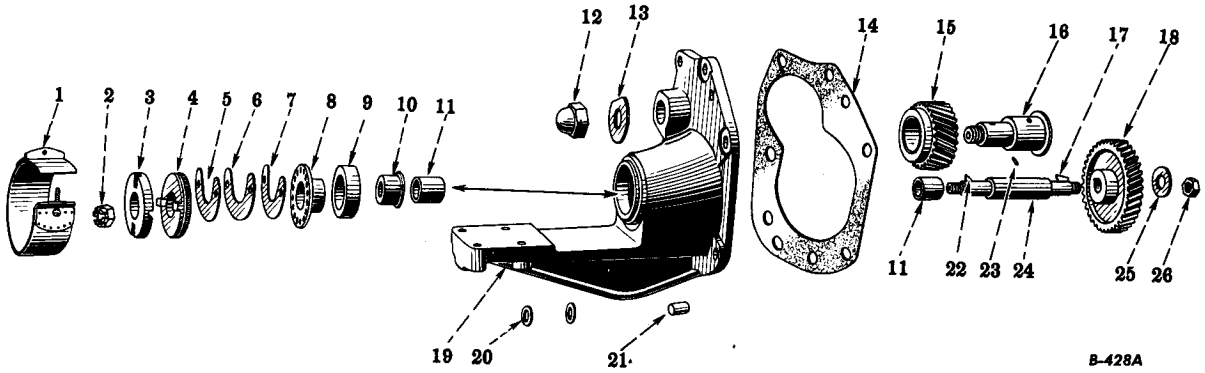

Reference numbers only are shown in illustration. Use I H part numbers in ordering.
Unnumbered parts in the illustrations are the same as corresponding parts shown with numbers.

MAGNETO DRIVE AND BRACKET

1	28 388 DA	Magneto Drive Cover, Complete	1
	110 490	Slotted Screw, No. 10 - 24 x 7/8" Fillister Head	1
2	103 028	Follows Reference No. 24	
3	35 719 D	Magneto Coupling Block Spacer	1
4	12 740 D	Magneto Coupling Block, Male	1
5	10 481 D	Magneto Coupling Shim, Medium	1
6	10 482 D	Magneto Coupling Shim, Heavy	1
7	10 553 D	Magneto Coupling Shim, Light	1
8	22 716 DA	Magneto Coupling	1
	181 308	Cap Screw, 1/4 x 7/16" N.F. Hex Head	2
	103 319	Lock Washer, 1/4"	2
9	33 788 D	Magneto Shaft Oil Seal	1
10	32 503 D	Magneto Shaft Spacer	1
11	32 506 DA	Magneto Drive Shaft Bushing	2
12	35 319 D	Magneto Idler Gear Shaft Nut	1
13	25 132 D	Magneto Idler Gear Shaft Lock Washer	1
14	32 505 DB	Magneto Bracket Gasket	1
15	32 497 DAX	Magneto Idler Gear with Bushing	1
16	32 499 DAX	Magneto Idler Gear Shaft with 1 Pin,	
		29 764 D and Plug, 50 410 DA	1
17	103 646	Magneto Drive Gear Key (Woodruff No. 7) (1/8 x 1/2")	1
18	32 500 DB	Magneto Drive Gear, 36 Teeth	1
19	5 947 D	Magneto Bracket	1

REF. NO.	PART NUMBER	DESCRIPTION	SERIAL NUMBER	NO. REQ'D
		MAGNETO DRIVE AND BRACKET—Continued		
19	5 947 DX	Magneto Bracket, Complete		1
		(Composed of:		
		1 Bracket 5 947 D		
		2 Dowel 32 504 D		
		2 Bushing 32 506 DA		
		2 Plug 103 865)		
	181 428	Cap Screw, 1/2 x 1-1/8" N.F. Hex Head		1
	181 435	Cap Screw, 1/2 x 2" N.F. Hex Head		4
	181 436	Cap Screw, 1/2 x 2-1/4" N.F. Hex Head		1
	103 028	Hex Nut, 1/2" N.F.		4
	103 323	Lock Washer, 1/2"		4
20	25 352 D	Magneto Bracket Bolt Gasket		2
21	32 504 D	Magneto Bracket Dowel		2
22	106 749	Magneto Drive Key (Woodruff No. 3)		1
23	29 764 D	Magneto Idler Gear Pin		1
24	32 501 D	Magneto Drive Shaft		1
	119 254	Hex Nut, 1/2" N.F. (Thick)		1
	103 028	Hex Nut, 1/2" N.F. (Light)		1
	103 374	Cotter Pin, 3/32 x 1"		1
25	32 502 D	Magneto Gear Washer		1
26	103 028	Follows Reference No. 19		
	50 410 DA	Magneto Idler Gear Shaft Pipe Plug, 1/8"		1

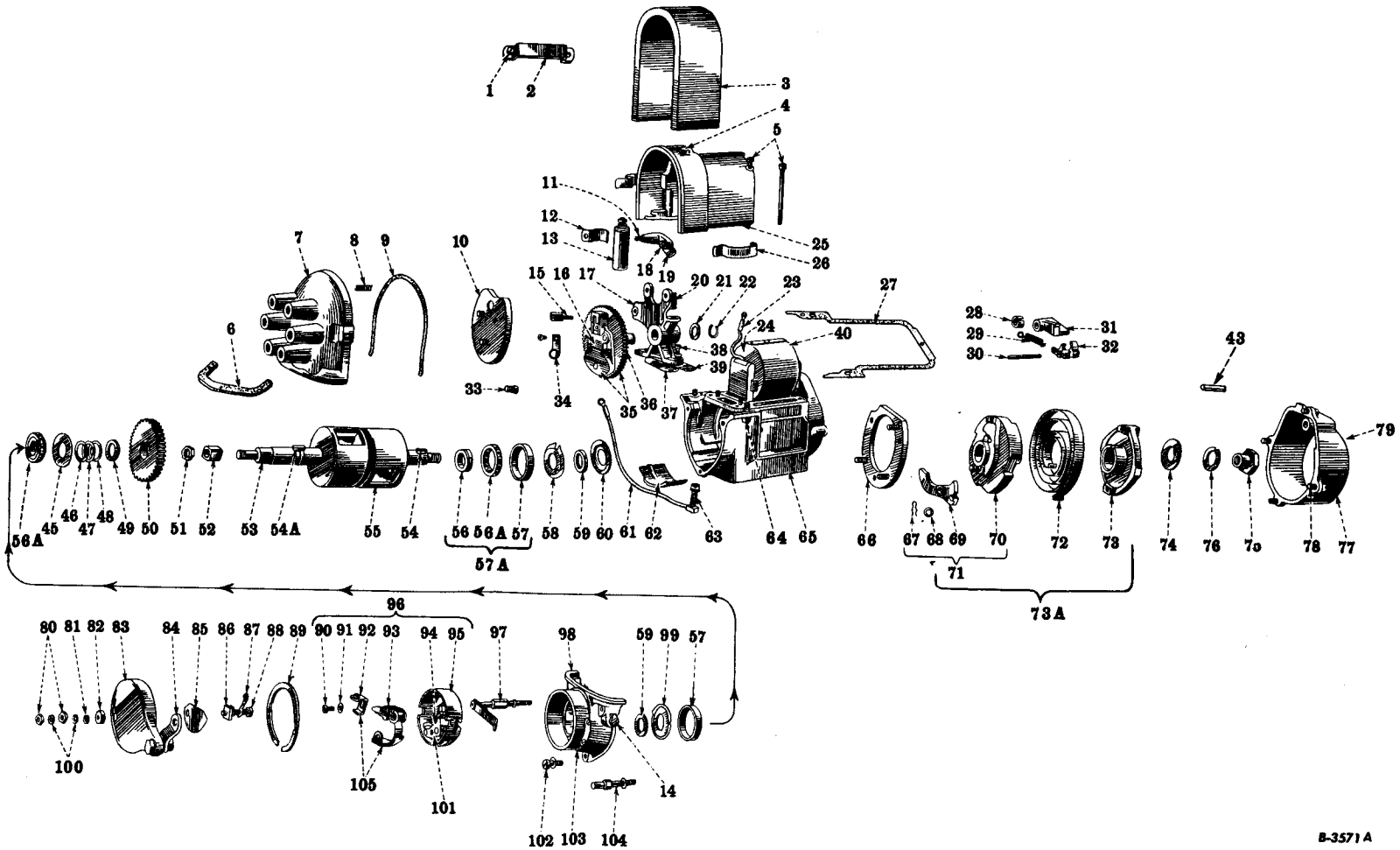

INTERNATIONAL INDUCTOR TYPE MAGNETO, MODEL F-6

Reference numbers only are shown in illustration. Use I H part numbers in ordering.
Unnumbered parts in the illustrations are the same as corresponding parts shown with numbers.

ELECTRICAL SYSTEM

REF. NO.	PART NUMBER	DESCRIPTION	SERIAL NUMBER	NO. REQ'D
		INTERNATIONAL INDUCTOR TYPE MAGNETO, MODEL F-6		
	32 361 DA	Magneto, Complete		1
	179 844	Cap Screw, 3/8 x 1-5/8" N.C. Hex Head		4
	103 321	Lock Washer, 3/8"		4
1	132 105	Magnet Strap Screw (Will Work for 21 324 D)		2
2	21 323 D	Magnet Strap		1
3	21 322 D	Magnet		1
4	21 328 DX	Distributor Bearing Oiler with Felt, E4A 576		1
4	E4A 576	Rear Bearing Oiler Felt		1
4	E4A 576	Distributor Bearing Oiler Felt		1
5	177 810	Frame Cover Screw, Long (Will Work for 21 318 D)		2
6	21 347 DC	Distributor Seal, Lower		1
7	28 656 DYA	Distributor Block with Seals, 21 347 DC and E4A 477 A		1
7	28 656 DZA	Distributor Block, Complete		1
		(Composed of:		
		3 Screw 28 655 D		
		1 Block 28 656 DYA		
		1 Disc 28 657 DX		
		7 Spring 28 674 D)		
8	28 674 D	Distributor Disc Contact Spring		7
9	E4A 477 A	Distributor Seal, Upper (Will Work for 21 348 DB)		1
10	28 657 DX	Distributor Disc		1
11	21 366 D	Secondary Leadout Spring		1
12	21 422 D	Condenser Clamp		1
	113 625	Slotted Screw, No. 8-32 x 5/16", Fillister Head		1
	121 841	Lock Washer, No. 8 (Cadmium Plated)		1
13	21 409 DB	Condenser		1
14	E4 295	Front and Rear Bearing Oiler		3
14	E4 216	Front Bearing Oiler Felt		1
14	E4A 576	Rear Bearing Oiler Felt		1
15	21 463 DAXA	Distributor Brush		1
16	21 460 DY	Distributor		1
17	2 551 DAY-6	Distributor Bearing		1
18	38 609 DA	Secondary Leadout Washer		2
19	48 564 D	Secondary Leadout		1
20	38 041 D	Distributor Bearing Felt		1
21	21 361 D	Distributor Shaft Washer		1
22	21 362 D	Distributor Shaft Snap Ring		1
23	58 243 D	Primary to Condenser Leadout Tube		1
24	56 673 D	Coil End Insulator		2
25	2 547 DX	Magneto Frame Cover, Complete		1
		(Composed of:		
		1 Oiler 21 328 DX		
		1 Oiler E4 295		
		1 Felt E4A 576)		

Always give MAGNETO NUMBER when ordering Parts.

REF. NO.	PART NUMBER	DESCRIPTION	SERIAL NUMBER	NO. REQ'D
		INTERNATIONAL INDUCTOR TYPE MAGNETO, MODEL F-6—Continued		
26	21 349 D	Distributor Block Spring		2
27	21 319 D	Frame Cover Gasket		1
28	24 616 DA	Pawl Spacer		1
29	24 612 D	Latch Spring		1
30	24 613 D	Pawl Latch Pin		1
31	32 671 D	Pawl		1
32	24 611 D	Pawl Latch		1
33	28 655 D	Distributor Disc Screw		3
34	21 464 DX	Distributor Contact Spring with Holder, E4A 311		1
	224 933	Screw, No. 5-40 x 3/16"		1
	131 181	Lock Washer, No. 6 (Cadmium Plated)		1
35	21 469 D	Distributor Shaft with Gear and Distributor		1
36	21 360 DX-6	Distributor Shaft and Gear		1
37	21 353 D	Distributor Bearing Shim		3
38	132 119	Distributor Bearing Screw, Short (Will Work for E4A 358)		2
	120 217	Lock Washer, No. 10 (Cadmium Plated)		4
39	21 466 D	Distributor Bearing Shim		1
40	21 401 DAX	Coil, Complete		1
40	56 599 DX	Coil and Core		1
43	24 609 D	Pawl Pin		1
45	E4A 324	Oil Flinger		1
46	E4A 305	Rotor Shim, Light		1
47	E4 212	Rotor Shim, Medium		1
48	E4A 372	Rotor Shim, Heavy		1
49	21 340 D	Rotor Shaft Bearing Spacer		1
50	33 138 D	Rotor Pinion (40 Teeth)		1
51	21 343 D	Breaker Cam Nut		1
52	21 468 D	Breaker Cam		1
53	21 342 D	Breaker Cam Key		1
54	106 749	Impulse Coupling Key		1
54A	106 749	Rotor Pinion Key (Woodruff No. 3, 1/8 x 1/2")		
		(Will Work for 4 167 T)		2
55	21 333 DX-6	Rotor, Complete		1
		(Composed of:		
		1 Spacer 21 340 D		
		1 Key 21 342 D		
		1 Nut 21 343 D		
		1 Cam 21 468 D		
		1 Pinion 33 138 D		
		2 Shim E4 212		
		2 Shim E4A 305		
		1 Flinger E4A 324		
		1 Race E4A 351		
		or		
		1 Race ST 600		
		1 Retainer E4A 353		
		or		
		1 Retainer ST 602		
		2 Shim E4A 372		
		1 Key 106 749)		

REF. NO.	PART NUMBER	DESCRIPTION	SERIAL NUMBER	NO. REQ'D
		INTERNATIONAL INDUCTOR TYPE MAGNETO, MODEL F-6—Continued		
56	ST 600	Rotor Shaft Bearing Inner Race (Also See E4A 351)		1
56	E4A 351	Rotor Shaft Bearing Inner Race (Optional with ST 600)		1
56A	ST 602	Rotor Shaft Bearing Retainer with Balls (IH) (Also see E4A 353)		1
56A	E4A 353	Rotor Shaft Bearing Retainer with Balls (Optional with ST 602)		1
57	ST 601	Rotor Shaft Bearing Inner Race (Also See E4A 352)		1
57	E4A 352	Rotor Shaft Bearing Outer Race (Optional with ST 601)		1
57A	E4 294	Rotor Shaft Bearing (Optional with ST 307)		2
57A	ST 307	Rotor Shaft Bearing (Optional with E4 294)		2
58	30 379 D	Felt Retainer, Inner		1
59	E4 226	Bearing Felt		2
60	30 378 D	Felt Retainer, Outer		1
61	21 399 DX	Primary Leadout		1
62	21 331 D	Primary Leadout Shield		1
63	132 760	Primary Leadout Terminal Screw (Will Work for 21 397 D)		1
	131 095	Lock Washer, No. 8		1
64	132 119	Frame Cover Screw, Short, No. 10-32 x 5/8" (Cadmium Plated)		2
	120 217	Lock Washer, No. 10 (Cadmium Plated)		2
65	2 546 DBYB	Magneto Frame, Complete		1
		(Composed of:		
		1 Gasket 21 319 D 1 Race E4A 352		
		1 Retainer 30 378 D or		
		1 Retainer 30 379 D 1 Race ST 601)		
		1 Felt E4 226		
	181 645	Cap Screw, 3/8 x 1-5/8" N.C. Hex Head		4
	103 321	Lock Washer, 3/8"		4
66	33 150 D	Frame Ring		1
	100 868	Slotted Screw, No. 10-32 x 1/2", Flat Head		3
67	30 114 D	Pawl Pin Snap Ring		2
68	24 610 D	Engaging Pawl Washer		2
69	32 711 D	Engaging Pawl		2
70	32 603 DAX	Magneto Member with Pins		1
71	32 712 D	Magneto Member, Complete		1
		(Composed of:		
		2 Washer 24 610 D		
		2 Snap Ring 30 114 D		
		1 Member 32 603 DAX		
		2 Pawl 32 711 D)		
72	24 605 D	Drive Spring		1
73	24 602 DA	Cam Member		1
73A	36 246 D	Magneto Impulse Coupling Rotating Unit, Complete		1
		(Composed of:		
		1 Member 24 602 DA		
		1 Spring 24 605 D		
		1 Member 32 712 D)		
74	24 603 D	Magneto Member Lock Washer		1
75	24 604 D	Impulse Coupling Nut		1
76	251 591 R1	Lock Washer, 1/2" (Cadmium Plated)		1

Always give MAGNETO NUMBER when ordering Parts.

REF. NO.	PART NUMBER	DESCRIPTION	SERIAL NUMBER	NO. REQ'D
		INTERNATIONAL INDUCTOR TYPE MAGNETO, MODEL F-6—Continued		
77	5 086 DX	Impulse Coupling Cover with Oiler, 27 311 D		1
78	131 974	Slotted Screw, No. 8-32 x 5/8" Fillister Head (Plated)		4
	121 841	Lock Washer, No. 8 (Cadmium Plated)		4
79	27 311 D	Impulse Coupling Oiler		1
80	120 614	Short Circuiting Screw Nut (Will Work for E4 267 A)		2
81	E4 271	Short Circuiting Screw Washer		1
82	30 037 D	Short Circuiting Screw Bushing		1
83	3 930 DX	Breaker Housing Cover		1
84	32 673 DA	Magneto Timing Link		1
85	31 135 D	Short Circuiting Spring Insulator		1
86	30 036 D	Short Circuiting Terminal Insulator		1
87	30 035 DA	Short Circuiting Spring		1
88	132 133	Short Circuiting Screw (Will Work for 30 038 D)		1
	120 217	Lock Washer, No. 10		2
89	21 327 D	Breaker Cover Packing		1
90	436 692	Stationary Point Support Screw (Will Work for 21 393 D)		1
91	21 394 D	Stationary Point Support Washer		1
92	21 388 DBX-1	Stationary Point Support with Point (Order 353 200 R91)		1
	21 373 DBY-1	Breaker Arm (Order 353 200 R91)		1
94	21 383 D	Cam Felt		1
95	21 368 DBY-6	Circuit Breaker Cup with Spring Anchor		1
96	25 796 DA	Breaker, Complete (Order 21 368 DBY-6 and 353 200 R91)		1
		(Composed of:		
		1 Cup 21 368 DBY-6		
		1 Arm 21 373 DBY-1		
		1 Stationary Point and Support 21 388 DBX-1		
		1 Stationary Point Support Screw 436 692		
		1 Washer 21 394 D		
		1 Screw 132 760		
		1 Washer 131 095)		
97	21 329 DX	Breaker Cover Spring Post		1
	120 217	Lock Washer, No. 10 (Cadmium Plated)		1
98	2 548 DAY	Breaker Housing, Complete		1
		(Composed of:		
		1 Stop 21 443 DX		
		1 Gasket 21 444 D		
		2 Felt E4 216		
		1 Felt E4 226		
		2 Oiler E4 295		
		1 Race E4 352		
		or		
		1 Race ST 601		
		2 Screw 421 454)		

REF. NO.	PART NUMBER	DESCRIPTION	SERIAL NUMBER	NO. REQ'D
		INTERNATIONAL INDUCTOR TYPE MAGNETO, MODEL F-6—Continued		
99	21 330 D	Felt Retainer (Breaker Cover Housing End)		1
100	120 217	Follows Reference Nos. 88, 102 and 104		
101	21 384 DXA	Spring Anchor with Felt, 21 383 D		1
102	132 124	Breaker Housing Screw, Short No. 10 (Will Work for 21 441 D)		1
	120 217	Lock Washer, No. 10		1
103	21 443 DX	Breaker Stop		1
	421 454	Slotted Screw, No. 5-40 x 3/16" N.C. Round Head		2
103	21 444 D	Breaker Stop Gasket		1
104	28 856 D	Magneto Timing Link Post		1
	120 217	Lock Washer, No. 10		1
	21 372 D	Tube of Magneto Grease		1
	45 578 DA	Breaker Point Gauge, Complete		1
		(Composed of:		
		1 Ring 21 438 DB		
		1 Gauge 45 580 DA		
		1 Gauge 45 581 D)		
105	353 200 R91	Breaker Point Set Package (Consisting of Breaker Arm Complete, 21 373 DB 21 and Stationary Point and Support with Contact Disc, 21 388 DBX 1 (Will Work for 21 388 DBX 1 and 21 373 DBY 1)		1
	21 358 D	Distributor Disc Pin		3
	21 438 DB	Breaker Point Gauge Ring		1
	45 580 DA	Spark Plug Gap Gauge		1
	45 581 D	Breaker Point Gauge		1
	E4 216	Breaker Housing Front Bearing Oiler Felt		2
	E4A 311	Distributor Contact Holder		1

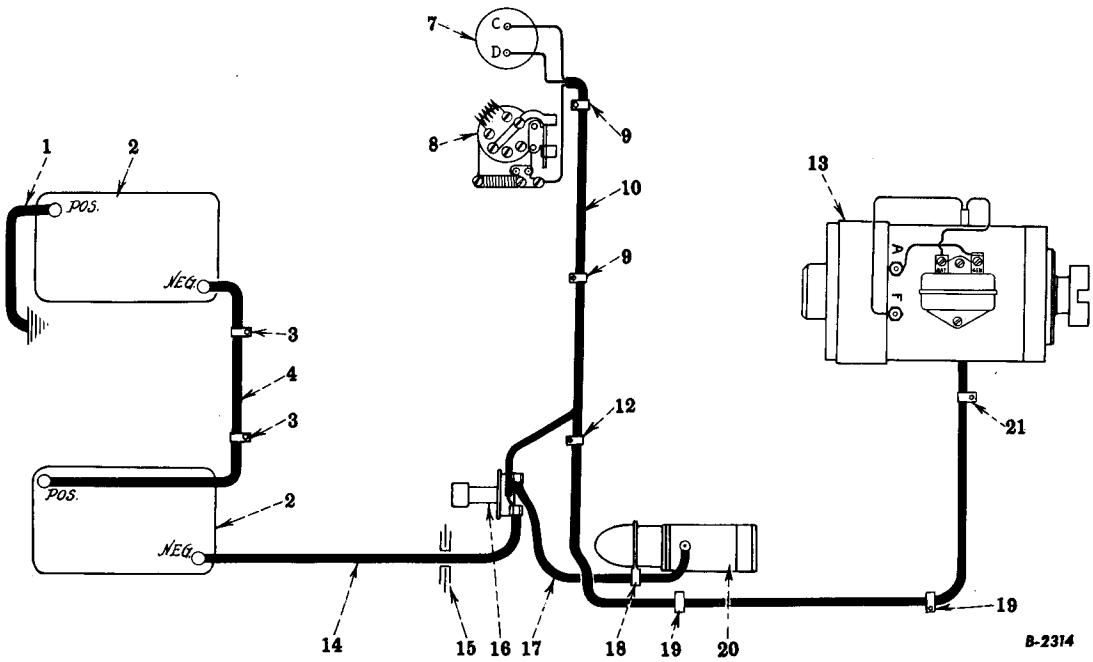

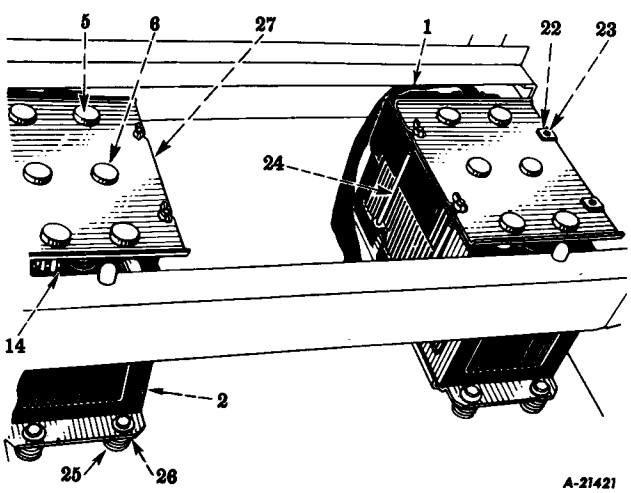

WIRING—BATTERIES, GENERATOR, STARTING MOTOR, STARTING SWITCH AND MOUNTING

Reference numbers only are shown in illustration. Use I H part numbers in ordering.
Unnumbered parts in the illustrations are the same as corresponding parts shown with numbers.

ELECTRICAL SYSTEM

REF. NO.	PART NUMBER	DESCRIPTION	SERIAL NUMBER	NO. REQ'D
		WIRING—BATTERIES, GENERATOR, STARTING MOTOR, STARTING SWITCH AND MOUNTING		
1	42 833 D	Battery to Ground Cable, Complete		1
		(Composed of:		
		1 Cable §42 833½ D		
		1 Bolt 26 453 HX		
		1 Nut §26 454 H		
		1 Terminal 98 044 HX)		
2	55 468 DA	Battery (Willard 5 245, Type DRG 17-3) (See Note)		
		(Will Work for 254 933 R91)		2
2	254 933 R91	Battery (Auto-Lite 3T-160) (See Note)		
		(Will Work for 55 468 DA)		2
3	38 100 D	Battery to Battery Cable Clip		2
	181 360	Cap Screw, 3/8 x 3/4" N.F. Hex Head		2
	103 026	Hex Nut, 3/8" N.F.		2
	103 321	Lock Washer, 3/8"		2
4	260 388 R91	Battery to Battery Cable (Will Work for 41 906 D)		1
5	50 234 D	Battery Hold Down Rubber, Short		4
6	50 235 D	Battery Hold Down Rubber, Long		8
7	354 473 R91	Ammeter (Rochester) (Optional with 42 383 DA)		1
		(Composed of:		
		2 Lock Washer 120 217		
		4 Hex Nut 120 614		
		1 Clamp 352 154 R91		
		2 Washer 352 265 R1)		
7	42 383 DA	Ammeter (A.C.) (Optional with 354 473 R91)		1
		(Composed of:		
		4 Lock Washer 120 217		
		2 Hex Nut 120 614		
		1 Clamp 250 466 R91)		
8	57 311 DX	Lighting Switch		1
9	27 385 D	Ammeter to Starting Switch Cable Clip		1
	181 360	Cap Screw, 3/8 x 3/4" N.F. Hex Head		1
	103 026	Hex Nut, 3/8" N.F.		1
	103 321	Lock Washer, 3/8"		1
10	60 011 D	Cable Harness (Not Lighting)		1
12	30 665 D	Generator to Ammeter Cable Clip		1
13	50 585 D	Generator		1
14	260 389 R91	Battery to Starting Switch Cable (Will Work for 41 908 DA)		1
15	63 323 D	Battery Cable Grommet - in Dash (Will Work for 50 203 H)		
		(Optional with 134 231 H)		1
15	134 231 H	Battery Cable Grommet - in Dash (Optional with 63 323 D)		1
16	64 931 H	Starting Switch		1
17	260 387 R91	Starting Switch to Starting Motor Cable		
		(Will Work for 41 909 D)		1

§ - Not Supplied Separately. NOTE: Order from Battery Manufacturer.

ELECTRICAL SYSTEM

REF. NO.	PART NUMBER	DESCRIPTION	SERIAL NUMBER	NO. REQ'D
		WIRING—BATTERIES, GENERATOR, STARTING MOTOR, STARTING SWITCH AND MOUNTING—Continued		
18	41 916 D	Starting Switch to Starting Motor Cable Clip		1
19	27 385 D	Generator to Ammeter Cable Clip		2
	181 364	Cap Screw, 3/8 x 1" N.F. Hex Head		2
	103 026	Hex Nut, 3/8" N.F.		2
	103 321	Lock Washer, 3/8"		2
20	42 999 D	Starting Motor		1
21	27 386 D	Generator to Ammeter Cable Clip		1
22	41 831 D	Battery Cover Clamp Stud Washer		4
23	41 830 D	Battery Cover Clamp Stud		4
	220 065	Hex Nut, 5/16" N.C.		16
24	12 577 R1	Battery Cover Clamp Bolt		4
	103 128	Wing Nut, 5/16" N.C.		4
25	37 976 D	Battery Bottom Rest Spring		8
26	41 826 DXA	Battery Bottom Support with Clips		2
	179 890	Cap Screw, 1/2 x 2-1/4" N.C. Hex Head		8
	Q 1 521	Washer, 1-1/4" O.D. x 17/32" I.D. x No. 14 Gauge		8
27	41 832 DBX	Battery Box Cover with 2 - 50 234 D and 4 - 50 235 D		2
	27 618 D	Ammeter to Starting Switch Cable Loom Clamp Ring		2
	27 618 D	Generator to Ammeter Cable Loom Clamp Ring		2
	41 827 D	Battery Bottom Mounting Spacer		8
	59 989 D	Battery Cable Shield		1
	181 356	Cap Screw, 3/8 x 5/8" N.F. Hex Head		3
	103 026	Hex Nut, 3/8" N.F.		3
	103 321	Lock Washer, 3/8"		3
	26 375 H	Battery Cable Terminal (Positive) (Prest-O-Lite 16 892)		1
	26 377 H	Battery to Starting Switch Cable Lug Terminal, 9/16"		1
	26 377 H	Starting Switch to Starting Motor Cable Lug Terminal, 9/16"		1
	26 453 HX	Battery Terminal Bolt with Nut		4
	98 044 HX	Cable Terminal		1
	250 466 R1	Ammeter Clamp (Used with A.C. Ammeter)		1
	352 154 R91	Ammeter Clamp (Used with Rochester Ammeter)		1
	352 265 R1	Ammeter Clamp Mounting, Washer (Used with Rochester Ammeter)		2

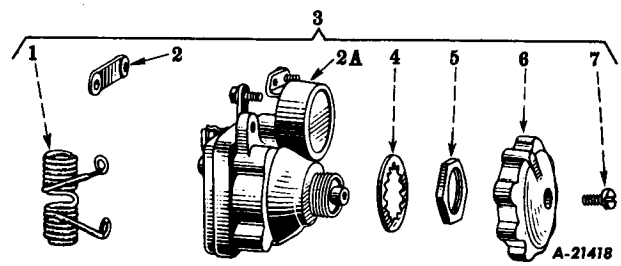

Reference numbers only are shown in illustration. Use I H part numbers in ordering.
Unnumbered Parts in the illustration are the same as corresponding parts shown with numbers.

LIGHTING SWITCH
(Delco-Remy)

1	43 039 D	1877830	Dimmer Resistance Coil	1
2	43 040 D	1877831	Generator Field Resistance Coil	1
2A	57 311 D		Lighting Switch with Coils 43 039 D and 43 040 D	1
3	57 311 DX	1994020	Lighting Switch, Complete	1
			(Composed of:	
			1 Switch 57 311 D	
			1 Nut 57 312 D	
			1 Knob 57 313 D	
			1 Screw 64 022 H	
			1 Lock Washer 121 841	
			1 Lock Washer 141 706)	
4	141 706		Lighting Switch Mounting Nut Lock Washer, 11/16" (Shakeproof 1230)	1
5	57 312 D	1882012	Lighting Switch Mounting Nut	1
6	57 313 D	1882013	Lighting Switch Knob	1
7	64 022 H		Lighting Switch Knob Mounting Screw (Will Work for 43 038 D)	1

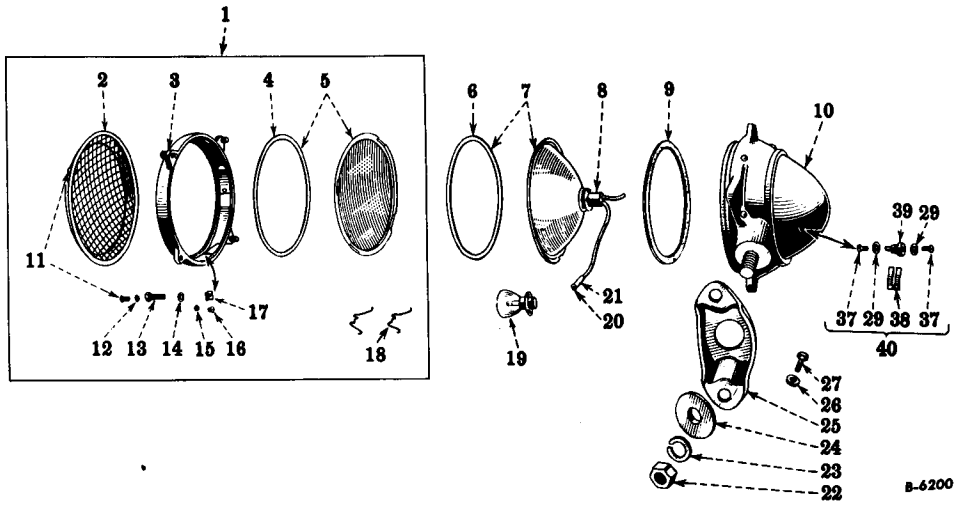

Reference numbers only are shown in illustration. Use I H part numbers in ordering.
Unnumbered Parts in the illustration are the same as corresponding parts shown with numbers.

ELECTRIC LIGHTING (Special)
HEADLIGHT AND REAR LIGHTS
(Guide Lamp Corporation)

1	51 888 D	923754	Headlight and Rear Light Door Guard, Complete			1
			(Composed of:			
			1	Lens	50 784 D	
			1	Door	51 889 D	
			1	Guard	51 891 D	
			1	Gasket	51 970 D	
			1	Clip	69 371 D	
			4	Screw	69 848 D	
			4	Screw	69 848 D	
			1	Washer	41 229 H	
			1	Spring	50 539 H	
			4	Lock Washer	103 319	
			1	Lock Washer	106 495	
			1	Screw	132 684)	
2	51 891 D	923756	Headlight and Rear Light Lens Guard			1
3	51 889 D	923755	Headlight and Rear Light Door			1
	103 319		Lock Washer, 1/4"			4
4	51 970 D	921636	Headlight and Rear Light Lens Gasket			1
4	69 372 D	5935246	Headlight and Rear Light Lens Gasket			1
5	50 784 D	921634	Headlight and Rear Light Lens with Gasket, 51 970 D			1
6	79 398 H	921789	Headlight and Rear Light Reflector Gasket			1
7	65 401 D	5931286	Headlight and Rear Light Reflector with Gasket, 79 398 D			
			(Will Work for 51 894 D) (Optional with 69 471 D)			1
7	69 491 D	5935478	Headlight and Rear Light Reflector with Gasket, 79 398 D			
			(Optional with 65 401 D) (Will Work for 51 894 D)			1

REF. NO.	PART NUMBER	MFR'S. NUMBER	DESCRIPTION	SERIAL NUMBER	NO. REQ'D
			ELECTRIC LIGHTING (Special)—Continued **HEADLIGHT AND REAR LIGHTS** **(Guide Lamp Corporation)**		
8	51 893 D	924023	Headlight and Rear Light Socket, Complete with Wire		1
9	68 418 D	5935245	Headlight and Rear Light Door Gasket		1
10	250 374 R91	5936041	Headlight and Rear Light Body		1
22	121 358		Hex Nut, 5/8" N.F.		1
23	103 325		Lock Washer, 5/8"		1
11	69 848 D	175160	Headlight and Rear Light Door Screw		4
11	69 395 D	132691	Screw, No. 6 - 32 x 3/8" Round Head		4
12	41 229 H		Headlight and Rear Light Lens Guard Retaining		
			Screw Washer (Shakeproof No. 1206)		1
13	69 848 D	175160	Door Retaining Screw		4
14	103 319		Follows Reference No. 3		
15	106 495		Follows Reference No. 17		
16	132 684		Follows Reference No. 17		
17	51 898 D	924753	Headlight and Rear Light Lens Locating Clip		
			(Order 69 371 D)		1
	132 684		Screw, No. 6 - 32 x 3/16" Oval Head		1
	106 495		Lock Washer, No. 6		1
17	69 371 D	921633	Headlight and Rear Light Lens Locating Clip		
			(Will Work for 51 898 D)		1
18	50 539 H	914255	Headlight and Rear Light Lens Retaining Spring		1
19	66 340 H		Headlight and Rear Light Bulb, 12 - 16 Volt,		
			32 - 21 C.P., Double Contact (Mazda No. 2326)		1
20	27 640 H	1867662	Wire Terminal (Head and Rear Lamp)		1
21	68 084 D	804463	Headlight and Rear Light Insulating Sleeve		1
22,23			Follows Reference No. 10		
24	36 273 D	121373	Headlight and Rear Light Bracket Bearing Washer		1
25	42 921 D		Headlight Bracket		2
27	179 881		Cap Screw, 1/2 x 1" N.C. Hex Head		2
26	103 323		Lock Washer, 1/2"		2
25	42 921 D		Rear Light Bracket		1
27	181 427		Cap Screw, 1/2 x 1" N.F. Hex Head		2
	103 028		Hex Nut, 1/2" N.F.		2
26	103 323		Lock Washer, 1/2"		2
29	48 716 H	138530	Headlight and Rear Light Terminal, Lockwasher		
			(Shakeproof No. 1218) (Will Work for 37 077 D)		2
37	37 536 H	121749	Headlight and Rear Light Screw		
			(No. 8 - 32 x 5/16" Round Head)		
			(Will Work for No. 8 - 32 x 1/4" and		
			No. 8 - 32 x 1/2")		2

REF. NO.	PART NUMBER	MFR'S. NUMBER	DESCRIPTION	SERIAL NUMBER	NO. REQ'D
			ELECTRIC LIGHTING (Special)—Continued HEADLIGHT AND REAR LIGHTS (Guide Lamp Corporation)		
38	79 407 H	922785	Terminal Spring (Order 68 417 D)		1
39	79 408 H	922786	Headlight Terminal Plate (Order 68 417 D)		1
40	68 417 D	5935509	Headlight and Rear Light Terminal, Complete		
			(Will Work for 37 064 D, 51 895 D)		1
			(Composed of:		
			2 Screw 37 536 H		
			2 Washer 48 716 H		
			1 Spring 79 407 H		
			1 Terminal Plate 79 408 H)		
	43 035 DA	917669	Headlight, L.H. and R.H. (12 - 16 Volt)		
			(Guide Model 534 H)		2
	43 035 DA		Rear Light (12 - 16 Volt)		1
	47 834 H	120622	Headlight and Rear Light Ground Screw Nut		1
	104 562 H		Headlight and Rear Light Ground Lock Washer		1

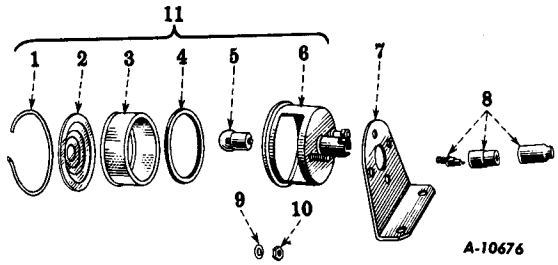

Reference numbers only are shown in illustration. Use I H part numbers in ordering.

TAIL LIGHT
(Guide Lamp Corporation)

1	11 251 V		Tail Light Lens Retaining Spring Ring	1
2	16 603 H	911505	Tail Light Glass (Ruby)	1
3	16 661 H	911506	Tail Light Outlook Glass (Clear)	1
4	16 662 H	911502	Tail Light Outlook Glass Cork Washer	1
5	29 939 H		Tail Light Bulb, 12 - 16 Volt, 3 C.P., Single Contact	
			(Mazda No. 67)	1
6	16 660 H	911500	Tail Light Body	1
	103 024		Hex Nut, 1/4" N.F.	2
	103 319		Lock Washer, 1/4"	2
7	22 080 D		Tail Light Bracket	1
	181 360		Cap Screw, 3/8 x 3/4" N.F. Hex Head	2
	103 026		Hex Nut, 3/8" N.F.	2
	103 321		Lock Washer, 3/8"	2
8	27 595 D		Tail Light Plug	1
9	103 319		Follows Reference No. 6	
10	103 024		Follows Reference No. 6	
11	29 971 H	225-A	Tail Light, Complete (12 - 16 Volt)	1
			(Composed of:	
			1 Glass 16 603 H	
			1 Body 16 660 H	
			1 Glass 16 661 H	
			1 Washer 16 662 H	
			1 Bulb 29 939 H	
			1 Ring 11 251 V)	
	38 087 D		Tail Light, 29 971 H with Plug, 27 595 D	1

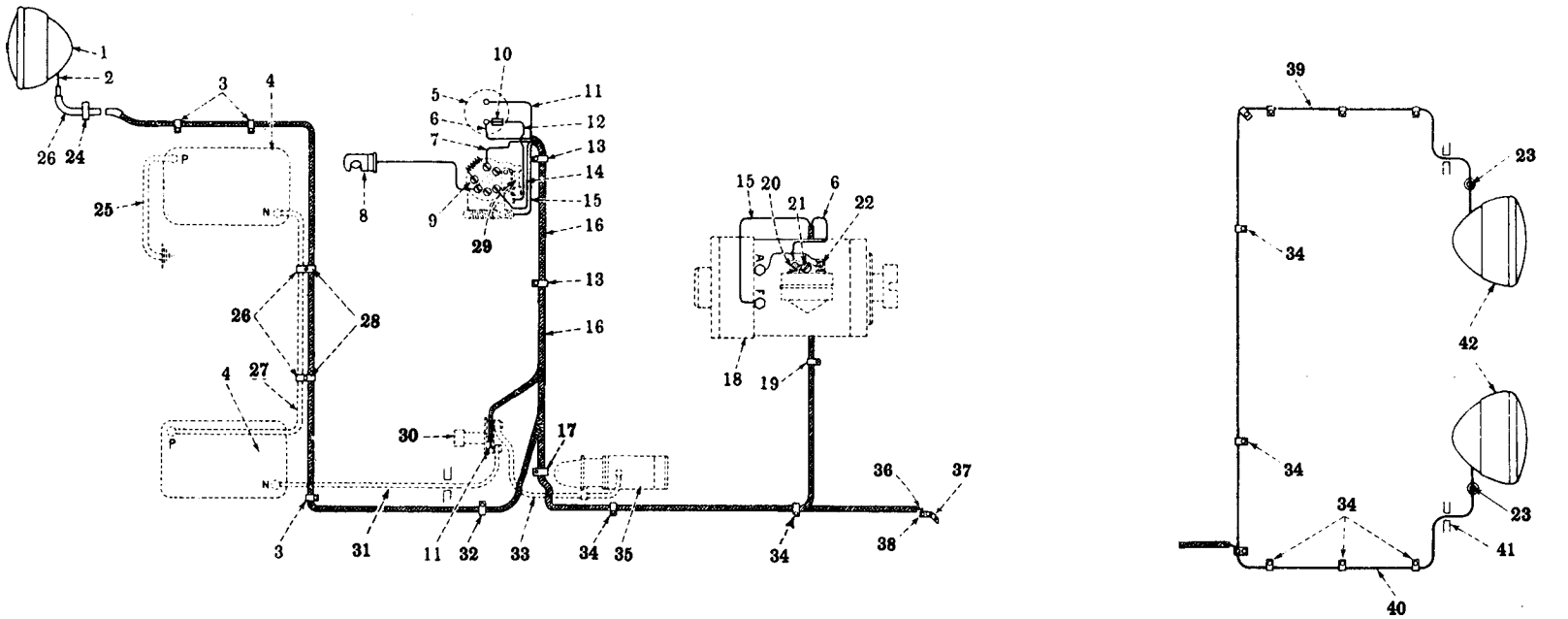

Wiring Diagram—Electric Lighting—Special (Delco-Remy)

A-10684 A

Reference numbers only are shown in illustration. Use I H part numbers in ordering.
Unnumbered parts in the illustrations are the same as corresponding parts shown with numbers.

REF. NO.	PART NUMBER	DESCRIPTION	SERIAL NUMBER	NO. REQ'D
		ELECTRIC LIGHTING (Special) (Delco-Remy)		
	43 043 D	Electric Lighting Attachment (2 Headlights and 1 Rear Light)		1
		(Factory Application - Order on Machine Order Form)		
		(Field Application - Order through Regular Service Parts Channels)		
	43 045 D	Electric Lighting Attachment (2 Headlights and 1 Tail Light)		1
		(Factory Application - Order on Machine Order Form)		
		(Field Application - Order through Regular Service Parts Channels)		
1	43 035 DA	Rear Light		1
2		Cable (Switch to Rear Light)		1
3	10 439 VA	Loom Clip, 3/16" (for 3/8" Bolt)		1
4	55 468 D	Battery (See Battery) (Willard 5245)		2
4	254 933 R91	Battery (See Battery) (Auto-Lite 3T-160)		2
5	354 473 R91	Ammeter (Rochester) (Optional with 42 383 DA)		1
5	42 383 DA	Ammeter (A.C.) (Optional with 354 473 R91)		1
6		Cable (Generator to Ammeter)		1
7		Cable (Switch to Junction Block)		1
8	65 534 D	Dash Light (12 Volts) (Will Work for 42 918 D and 59 175 D)		1
9	57 311 D	Lighting Switch (See Switches)		1
10	45 027 H	Ammeter to Switch Cable Insulator (Will Work for 28 499 H)		2
11		Cable (Starting Switch to Ammeter)		1
12	30 436 D	Ammeter to Switch Cable		1
13	38 411 D	Loom Clip, 3/8" (for 3/8" Bolt)		2
14		Cable (Switch to Rear Light)		1
15		Cable (Generator Field to Switch)		1
16	59 184 D	Lighting Cable Harness		1
17	61 271 D	Loom Clip, 1/4" (for 5/8" Bolt)		1
18	50 585 D	Generator (See Generator)		1
19	62 302 D	Loom Clip, 1/4" (for 1/2" Bolt)		1
20		Battery Terminal		1
21		Mounting Screw		1
22		Generator Terminal		1
23	27 618 D	Headlight Cable Loom Clamp Ring		4
24	62 302 D	Rear Light Cable Conduit Clip		1
25	42 833 D	Cable (Battery to Ground) (See Wiring)		1
26	38 100 D	Battery to Battery Cable Clip (See Wiring Diagram)		2
27	260 388 R91	Cable (Battery to Battery) (See Wiring Diagram)		1
28	42 914 D	Rear Light Cable Clip		2
29	10 815 V	Fuse, 10 Ampere (No. 3 AC-10)		1
30	64 931 H	Starting Switch (See Switches)		1
31	260 389 R91	Cable (Starting Switch to Battery) (See Wiring Diagram)		1

ELECTRICAL SYSTEM

REF. NO.	PART NUMBER	DESCRIPTION	SERIAL NUMBER	NO. REQ'D
		ELECTRIC LIGHTING (Special)—Continued (Delco-Remy)		
32	27 248 H	Loom Clip, 1/4" (for 3/8" Bolt)		1
33	260 387 R91	Cable (Starting Switch to Starting Motor) (See Wiring Diagram)		1
34	60 938 D	Loom Clip, 1/4" (for 3/8" Bolt)		14
35	42 999 D	Starting Motor (See Wiring)		1
36		Cable (Switch to Headlight)		1
37	42 916 D	Headlight Cable Junction Block Bracket		1
38	42 915 D	Headlight Cable Junction Block		1
	110 500	Screw, No. 10 - 24 x 1/2" Round Head		1
	110 633	Hex Nut, No. 10 - 24		1
	106 497	Lock Washer, No. 10		1
38	42 917 D	Headlight Cable Junction Block, 42 915 D with Bracket, 42 916 D		1
39	49 186 DX	Left Headlight Cable with Loom		1
40	30 693 DX	Right Headlight Cable with Loom		1
41	1 627 Y	Hood Grommet		2
42	43 035 DA	Headlight, L.H. and R.H. (Guide No. 534 H) (12 - 16 Volts)		1
	22 080 D	Tail Light Bracket		1
	181 360	Cap Screw, 3/8 x 3/4" N.F. Hex Head		2
	103 026	Hex Nut, 3/8" N.F.		2
	103 321	Lock Washer, 3/8"		2
	27 595 D	Tail Light Plug		1
	38 087 D	Tail Light, 29 971 H with Plug, 27 595 D		1
	42 921 D	Head Light Bracket		2
	179 881	Cap Screw, 1/2 x 1" N.C. Hex Head		4
	103 323	Lock Washer, 1/2"		4
	42 921 D	Rear Light Bracket		1
	181 427	Cap Screw, 1/2 x 1" N.F. Hex Head		2
	103 028	Hex Nut, 1/2" N.F.		2
	103 323	Lock Washer, 1/2"		2
	29 939 H	Dash Light Bulb (Mazda No. 67)		1
	29 971 H	Tail Light (Guide No. 225 A) (12 - 16 Volt)		1

CHASSIS

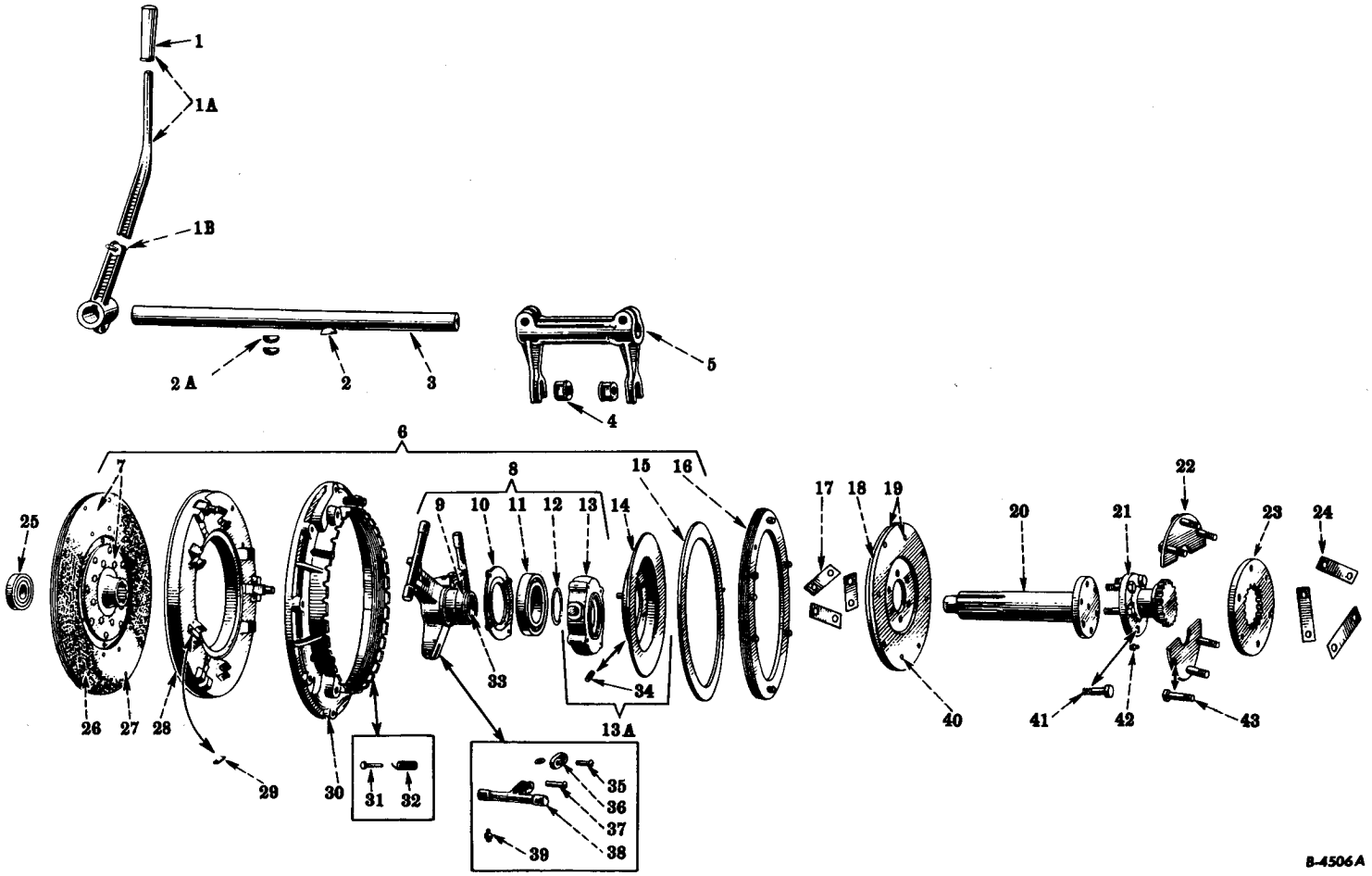

ENGINE CLUTCH, CLUTCH CONTROL AND CONNECTIONS

(Hand Operated Over-Center Engine Clutch)

Reference numbers only are shown in illustration. Use I H part numbers in ordering.

Unnumbered parts in the illustrations are the same as corresponding parts shown with numbers.

REF. NO.	PART NUMBER	DESCRIPTION	SERIAL NUMBER	NO. REQ'D
		CLUTCH CONTROL AND CONNECTIONS (Hand Operated Over-Center Engine Clutch)		
1	41 597 DA	Engine Clutch Hand Lever Handle		1
1A	259 703 R12	Engine Clutch Hand Lever, 259 703 R1, with Pin, 69 076 D		
		and Handle, 41 597 DA		1
	103 030	Cap Screw, 5/8 x 2-5/8" N.F. Hex Head		1
	16 140 R1	Hex Nut, 5/8"		1
	103 325	Lock Washer, 5/8"		1
	103 373	Cotter Pin, 3/32 x 3/4"		1
1B	69 076 D	Gear Shifter Lock Shaft Connecting Rod Pin		1
2	10 430 V	Engine Clutch Hand Lever Key		1
2A	10 430 V	Engine Clutch Release Fork Key		2
3	40 948 D	Engine Clutch Release Shaft		1
4	42 298 DB	Engine Clutch Release Pin Bushing		2
5	5 723 DC	Engine Clutch Release Fork		1
	179 931	Cap Screw, 5/8 x 2" N.C. Hex Head		2
	103 325	Lock Washer, 5/8"		2
6				
to		See Clutch		
16				
17	40 974 DA	Engine Clutch Coupling Bolt Lock		3
18	40 943 D	Engine Clutch Brake Disc Facing		1
19	40 942 DX	Engine Clutch Brake Disc with Facing,		
		40 943 D and 8 Rivets, 21 444 H		1
20	40 941 DA	Engine Clutch Shaft		1
21	40 944 DB	Engine Clutch Coupling, 18 Teeth		1
22	40 947 D	Engine Clutch Coupling Washer		2
23	40 946 D	Engine Clutch Coupling Ring, 18 Teeth		1
24	41 693 DA	Engine Clutch Coupling Ring Bolt Lock		3
25	ST 240	Engine Clutch Pilot Ball Bearing (IH-PC-340)		
		(Will Work for 43 950 H)		1
25	43 950 H	Engine Clutch Pilot Ball Bearing (ND 7606)		
		(Optional with ST 240)		1
26				
to		See Clutch		
39				
40	21 444 H	Engine Clutch Brake Disc Facing Rivet, 3/16 x 1/2"		8
41	40 945 D	Engine Clutch Coupling Bolt		6
	103 028	Hex Nut, 1/2"		6
42	109 461	Engine Clutch Pilot Bearing Lubricator (Lincoln No. 5000)		
		(Optional with 119512)		1
42	119 512	Engine Clutch Pilot Bearing Lubricator (Alemite 1610)		
		(Optional with 109461)		1
43	40 945 D	Engine Clutch Coupling Ring Bolt		6
	103 028	Hex Nut, 1/2" N.F.		6
	ST 310	Engine Clutch Release Bearing (IH-PC-270)		1

REF. NO.	PART NUMBER	MFR'S. NUMBER	DESCRIPTION	SERIAL NUMBER	NO. REQ'D
			OVER—CENTER ENGINE CLUTCH, 17" (Hand Operated) (Rockford Drilling Machine)		
6	40 938 DI	CLA-1152-AH	Engine Clutch, Complete, 43 206 DF with		
			Driven Member, 67 847 DC		1
	12 297 R1		Cap Screw, 1/2 x 2-1/8" N.C. Hex Head		9
	103 323		Lock Washer, 1/2"		9
7	67 847 DC	UCL-6-7940	Driven Member with Cemented Facings (Standard)		1
7	258 562 R92		Bi-Metallic Driven Member (Special)		1
			(Factory Application - Order on Machine		
			Order Form)		
			(Field Application - Order through Regular		
			Service Parts Channels)		
8	43 190 DB	UCL-4338-2A	Sleeve and Bearing, Complete		1
			(Composed of:		
			1 Bearing ST 273		
			1 Sleeve 43 193 DBX		
			1 Ring 43 195 D		
			1 Carrier 43 197 DX		
			1 Plate 43 201 DA)		
9	43 193 DBX	UCL-4338-2A	Sleeve with 2 Bushings, 43 194 D and Fitting, 119 512		1
10	43 201 DA	CL-4257-1	Bearing Plate		1
	179 816		Cap-Screw, 5/16 x 3/4" N.C. Hex Head		4
	103 320		Lock Washer, 5/16"		4
	104 279		Rivet, 3/8 x 3/4" Flat Head - Through		
			Spline Center		16
11	ST 273		Radial Ball Bearing (IH-C-270)		
			(Will Work for 48 173 D)		1
11	48 173 D	CL-4599	Radial Ball Bearing (ND-3214)		
			(Optional with ST 273)		1
12	43 195 D	CL-3900	Snap Ring		1
13	43 197 D	CL-4256	Bearing Carrier		1
13A	43 197 DX		Bearing Carrier, Complete		1
			(Composed of:		
			1 Carrier 43 197 D		
			1 Disc 43 198 D		
			2 Pin 43 199 D		
			4 Lock Washer 103 320		
			1 Fitting 109 353		
			4 Bolt 179 816)		
14	43 198 D	CL-4152	Bearing Retainer Brake Plate		1
	179 816		Cap Screw, 5/16 x 3/4" N.C. Hex Head		4
	103 320		Lock Washer, 5/16"		4
15	43 214 D	CL-3904	Adjusting Ring Plate		1
16	43 212 DBXA	UCL-3897-2	Adjusting Ring, Complete		1
			(Composed of:		
			2 Nut 11 449		
			1 Ring §43 212 DB		
			2 Screw 61 115 D		
			1 Lock 61 128 D)		

CHASSIS

REF. NO.	PART NUMBER	MFR'S. NUMBER	DESCRIPTION	SERIAL NUMBER	NO. REQ'D
			OVER—CENTER ENGINE CLUTCH, 17" (Hand Operated) (Rockford Drilling Machine)—Continued		
26	43 246 DXA	CL-4170	Clutch Facing Package (Set)		1
27	63 385 D	CL-1011-1	Clutch Facing Rivet		36
28	43 213 DBX	UCL-3894-3	Pressure Plate, with Set of 6		
			Blocks, 43 248 D		1
29	43 248 D	UCL-3478-S-6	Set of 6 Cam Blocks		1
	114 353	CL-3921	Screw, 1/4 - 20 x 1/2" (Fillister Head)		6
	31 232 D	CL-3468	Lock Washer, 1/4" (Shakeproof No. 1114-5)		6
30	43 208 DCX	UCL-3895-4	Back Plate with 3 Studs, 43 209 DA and		
			3 Pins, 3741 T		1
31	61 130 D	CL-5328	Return Spring Bolt		6
	122 712		Hex Nut, 5/16" N.F. (Castellated)		6
	103 361		Cotter Pin, 1/16 x 1/2"		6
32	43 217 D	CL-4451	Return Spring		6
33	43 194 D	CL-4154	Sleeve Bushing		2
34	43 199 D	CL-4052	Dowel Pin		2
35	254 621 R1	CL-4341	Link Pin, Short		3
	106 262		Spring Cotter, 1/8 x 5/8"		3
	107 763		Washer, 3/8" I.D. x 7/8" O.D. x No. 16 Gauge		3
36	43 207 D	CL-4339-1	Connecting Link		3
37	43 211 D	CL-4340	Link, Pin, Long		3
	106 262		Spring Cotter, 1/8 x 5/8"		3
	107 763		Washer, 3/8" I.D. x 7/8" O.D. x No. 16 Gauge		3
38	56 996 DX	UCL-1-4337-S-3-A	Set of 3 Camshafts with Set of 6 Blocks,		
			43 248 D and 3 Fittings, 27 838 D or 443 569)		1
39	27 838 D	CL-5061	Camshaft Lubricator Fitting (Optional with 443 569)		3
39	443 569	CL-5061	Camshaft Lubricator Fitting (Optional with 27 838 D)		3
	43 206 DF	UCLA-18-3895-4	Clutch, Complete Less Driven Member		1
			(Composed of:		
			1 Sleeve and Bearing 43 190 DB		
			3 Link 43 207 D		
			1 Plate 43 208 DCX		
			3 Pin 43 211 D		
			1 Ring 43 212 DBXA		
			1 Plate 43 213 DBX		
			1 Plate 43 214 D		
			6 Spring 43 217 D		
			1 Cam Shaft 56 996 DX		
			6 Bolt 61 130 D		
			3 Pin 254 621 R1		
			6 Cotter 103 361		
			6 Washer 106 262		
			6 Cotter 107 763		
			6 Bolt 122 712)		

REF. NO.	PART NUMBER	MFR'S. NUMBER	DESCRIPTION	SERIAL NUMBER	NO. REQ'D
			OVER-CENTER ENGINE CLUTCH, 17" (Hand Operated) (Rockford Drilling Machine)—Continued		
	43 209 DA	CL-3902	Drive Stud		3
	61 115 D	CL-5215	Adjusting Lock Screw		2
	61 128 D	CL-5201	Adjusting Lock		1
	11 449	CL-1608	Hex Jam Nut, 3/8" N.F.		2
	27 166 H	CL-1608	Adjusting Lock Screw Nut		2
	3 741 T		Drive Stud Pin, 1/4"		3
	109 353		Lubrication Fitting (Alemite No. 1611)		1
	109 461		Lubrication Fitting, 1/8" (Lincoln)		
			(Optional with 119 512)		1
	119 512		Lubrication Fitting, 1/8" (Alemite)		
			(Optional with 109 461)		1

MEMORANDA

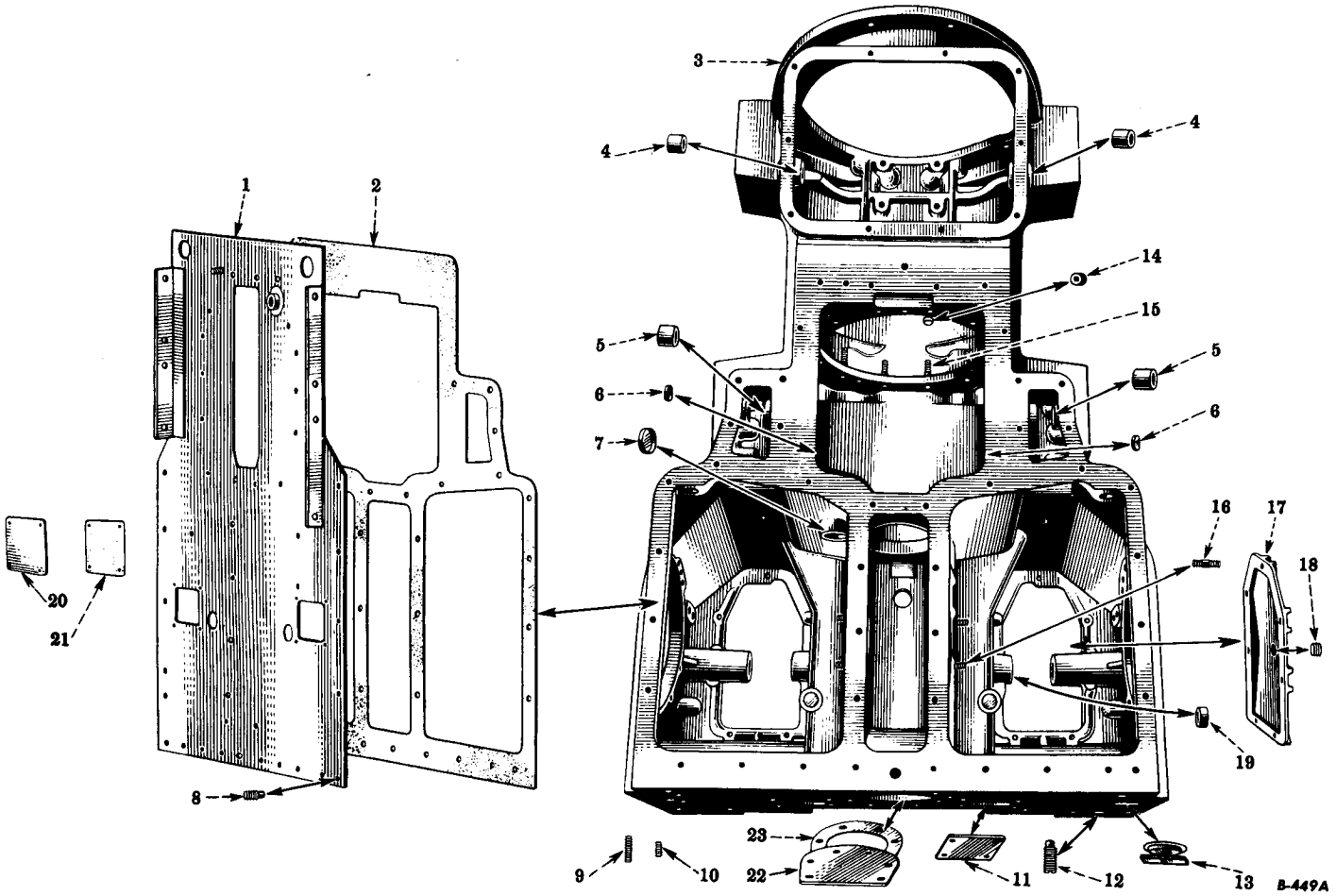

MAIN FRAME AND COVERS

Reference numbers only are shown in illustration. Use I H part numbers in ordering.
Unnumbered parts in the illustrations are the same as corresponding parts shown with numbers.

CHASSIS

REF. NO.	PART NUMBER	DESCRIPTION	SERIAL NUMBER	NO. REQ'D.
		MAIN FRAME AND COVERS		
1	57 100 DXA	Main Frame Cover, Complete (Not Odometer Drive)		1
	179 883	Cap Screw, 1/2 x 1-1/4" N.C. Hex Head		36
	103 323	Lock Washer, 1/2"		36
2	42 552 D	Main Frame Cover Gasket		1
3	5 900 DKY	Main Frame with Studs and Bushings		1
	106 645	Socket Head Pipe Plug, 1-1/2"		1
	104 939	Cork, 13/32 x 9/16" Diameter x 3/4" Long		2
	104 941	Cork, 1/2 x 11/16" Diameter x 7/8" Long		2
	106 622	Cork, 5/8 x 1-3/16" Diameter x 1" Long		6
	106 624	Cork, 25/32 x 1" Diameter x 1-1/4" Long		6
	117 931	Cork, 1-3/16 x 1-7/16" Diameter x 1-1/2" Long		5
4	41 598 D	Engine Clutch Release Shaft Bushing		2
5	41 599 D	Steering Brake Lever-Outer Bushing		4
6	41 600 D	Steering Brake Operating Shaft Plug		2
7	46 369 D	Transmission Reverse Idler Shaft Plug		1
8	18 585 DA	Main Frame Cover Dowel Pin (Will Work for 42 548 D)		2
9	57 387 D	Drawbar Guide Bracket Stud, Upper		2
10	57 386 D	Drawbar Guide Bracket Stud, Lower		4
11	42 290 D	Main Frame Rear Inspection Cover		2
	179 837	Cap Screw 3/8 x 3/4" N.C. Hex Head		8
	103 321	Lock Washer, 3/8"		8
12	40 998 DA	Track Pivot Shaft Set Screw		2
	220 081	Hex Nut, 3/4" N.C.		2
13	42 297 D	Steering Clutch Lubrication Port Cover with Clamp and Bolt		2
14	4 926 DA	Engine Clutch Compartment Drain Plug		1
	107 765	Cotter Pin, 3/16 x 5/8"		1
15	41 957 D	Transmission End Cover Stud		4
16	40 932 DA	Drive Bevel Gear Bearing Cage Stud		4
17	5 803 DC	Steering Brake Inspection Cover		2
	179 885	Cap Screw, 1/2 x 1-1/2" N.C. Hex Head		14
	103 323	Lock Washer, 1/2"		14
18	4 926 DAX	Steering Brake Inspection Cover Drain Plug with Pin, 107 765		2
19	41 162 D	Brake Pivot Shaft Cup Plug		2
20	56 011 D	Steering Clutch Inspection Cover		2
	181 331	Cap Screw, 5/16 x 1/2" N.F. Hex Head		8
	103 320	Lock Washer, 5/16"		8
21	56 014 D	Steering Clutch Inspection Cover Gasket		2
22	42 288 D	Power Take-off Cover		1
	179 946	Cap Screw, 3/4 x 1-1/4" N.C. Hex Head		6
	103 326	Lock Washer, 3/4"		6
23	42 289 D	Power Take-off Cover Gasket		1
	8 389 DA	Transmission Spline Shaft Bearing Cage, Rear		1
	58 989 D	Main Frame Magneto Drain Plug		1
	62 863 D	Rear Engine Support Dowel Bolt		2
	103 030	Hex Nut, 5/8" N.F.		2
	103 325	Lock Washer, 5/8"		2
	64 810 D	Sprocket Drive Carrier and Cover Stud		16
	65 010 D	Cover to Main Frame Dowel Pin		4
	107 765	Steering Brake Inspection Cover Drain Plug Cotter Pin, 3/16 x 5/8"		1

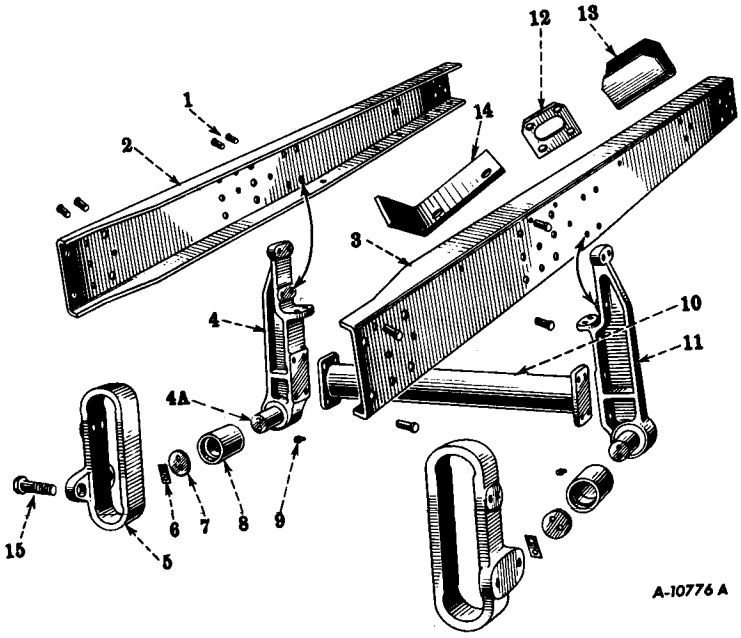

Reference numbers only are shown in illustration. Use I H part numbers in ordering.
Unnumbered parts in the illustrations are the same as corresponding parts shown with numbers.

MAIN FRAME SIDE CHANNELS
TRACK FRAME GUIDE, ROLLERS AND BRACKET
(Not Rigid Track Frame)

1	42 293 D	Main Frame Side Channel Dowel	8
2	58 194 DA	Main Frame Side Channel, L.H.	1
	179 952	Cap Screw, 3/4 x 2" N.C. Hex Head	4
	179 974	Cap Screw, 7/8 x 2-1/4" N.C. Hex Head	6
	103 326	Lock Washer, 3/4"	4
	103 327	Lock Washer, 7/8"	6
3	52 416 DA	Main Frame Side Channel, R.H.	1
	179 952	Cap Screw, 3/4 x 2" N.C. Hex Head	4
	179 974	Cap Screw, 7/8 x 2-1/4" N.C. Hex Head	6
	103 326	Lock Washer, 3/4"	4
	103 327	Lock Washer, 7/8"	6
4	5 767 DAX	Track Frame Guide Roller Bracket, L.H. with Roller Shaft, 41 429 D	
		(Not Wide Tread)	1
	16 158 R1	Cap Screw, 3/4 x 2-1/8" N.F. Hex Head	4
	12 301 R1	Cap Screw, 3/4 x 2-5/8" N.F. Hex Head	2
	103 031	Hex Nut, 3/4" N.F.	6
	103 326	Lock Washer, 3/4"	6
4	5 769 DBX	Track Frame Guide Roller Bracket, L.H. with Roller Shaft, 41 429 D	
		(Wide Tread)	1
	16 158 R1	Cap Screw, 3/4 x 2-1/8" N.F. Hex Head	4
	12 301 R1	Cap Screw, 3/4 x 2-5/8" N.F. Hex Head	2
	103 031	Hex Nut, 3/4" N.F.	6
	103 326	Lock Washer, 3/4"	6
4A	41 429 D	Track Frame Guide Roller Shaft	4
5	41 435 DB	Track Frame Guide	2
	16 170 R1	Cap Screw, 7/8 x 2-1/8" N.F. Hex Head	4
	103 327	Lock Washer, 7/8"	4

REF. NO.	PART NUMBER	DESCRIPTION	SERIAL NUMBER	NO. REQ'D.
		MAIN FRAME SIDE CHANNELS TRACK FRAME GUIDE, ROLLERS AND BRACKET—Continued (Not Rigid Track Frame)		
6	35 089 D	Track Frame Guide Roller Retaining Washer Lock		2
7	41 431 D	Track Frame Guide Roller Retaining Washer		2
	181 426	Cap Screw, 1/2 x 7/8" N.F. Hex Head		4
8	41 430 D	Track Frame Guide Roller		2
9	109 461	Track Frame Guide Roller Lubricator (Lincoln No. 5000)		
		(Will Work for 119 512)		2
9	119 512	Track Frame Guide Roller Lubricator (Alemite No. 1610)		
		(Will Work for 109 461)		2
10	41 432 DXA	Track Frame Guide Roller Bracket Brace with Flanges (Not Wide Tread)		1
	181 511	Cap Screw, 3/4 x 2" N.F. Hex Head		8
	103 031	Hex Nut, 3/4" N.F.		8
	103 326	Lock Washer, 3/4"		8
10	41 433 DXA	Track Frame Guide Roller Bracket Brace with Flanges		
		(Wide Tread)		1
	179 952	Cap Screw, 3/4 x 2" N.C. Hex Head		4
	181 511	Cap Screw, 3/4 x 2" N.F. Hex Head		4
	103 031	Hex Nut, 3/4" N.F.		4
	103 326	Lock Washer, 3/4"		8
11	5 768 DBX	Track Frame Guide Roller Bracket, R.H. with Roller Shaft, 41 429 D		
		(Not Wide Tread)		1
	16 158 R1	Cap Screw, 3/4 x 2-1/8" N.F. Hex Head		4
	12 301 R1	Cap Screw, 3/4 x 2-5/8" N.F. Hex Head		2
	103 031	Hex Nut, 3/4" N.F.		6
	103 326	Lock Washer, 3/4"		6
11	5 770 DAX	Track Frame Guide Roller Bracket, R.H. with Roller Shaft, 41 429 D		
		(Wide Tread)		1
	16 158 R1	Cap Screw, 3/4 x 2-1/8" N.F. Hex Head		4
	12 301 R1	Cap Screw, 3/4 x 2-5/8" N.F. Hex Head		2
	103 031	Hex Nut, 3/4" N.F.		6
	103 326	Lock Washer, 3/4"		6
12	50 180 D	Starting Crank Support Clamp		1
	181 430	Cap Screw, 1/2 x 1-3/8" N.F. Hex Head		2
	103 028	Hex Nut, 1/2" N.F.		2
	103 321	Lock Washer, 1/2"		2
13	50 181 D	Starting Crank Support Clamp		1
	181 365	Cap Screw, 3/8 x 1-1/8" N.F. Hex Head		2
	103 026	Hex Nut, 3/8" N.F.		2
	103 321	Lock Washer, 3/8"		2
14	43 183 D	Water Trap Guard (Not Crankcase Guard)		1
	181 532	Cap Screw, 7/8 x 2" N.F. Hex Head		2
	102 652	Hex Nut, 7/8" N.F.		2
	103 327	Lock Washer, 7/8"		2
15	59 237 D	Track Frame Guide Bolt		4
	121 326	Lock Washer, 1"		4
15	59 238 D	Track Frame Guide Bolt		4
	121 326	Lock Washer, 1"		4

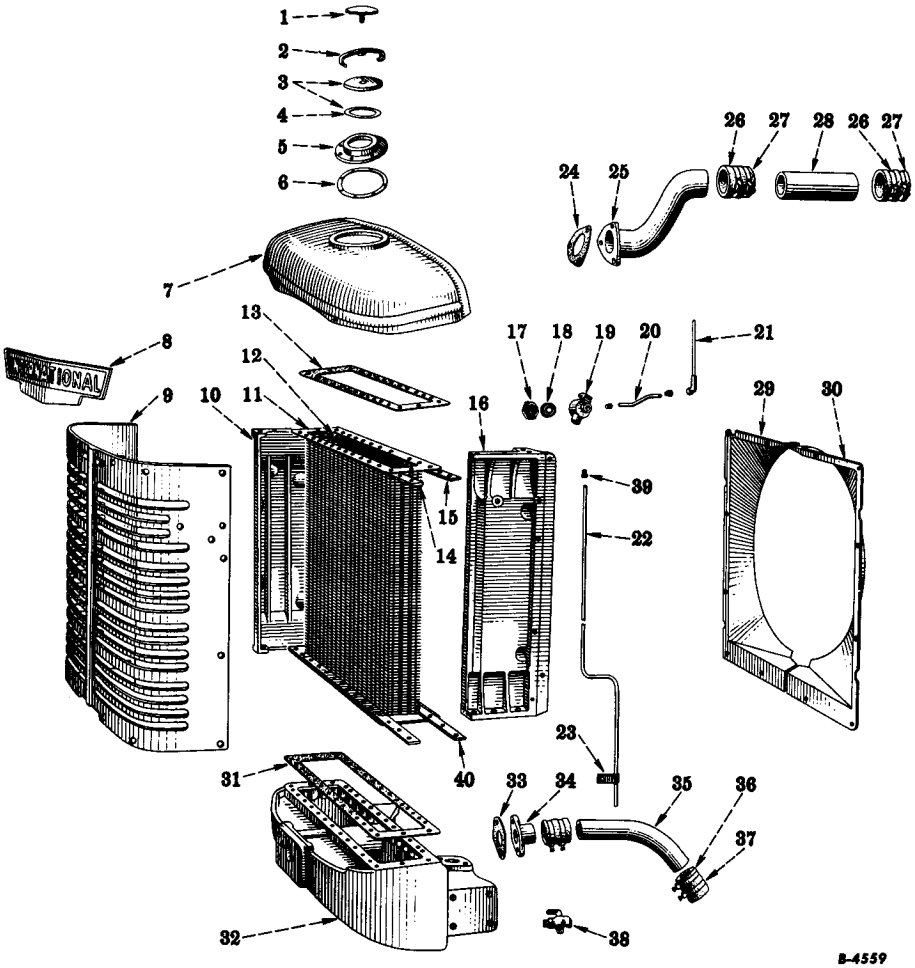

RADIATOR AND CONNECTIONS

Reference numbers only are shown in illustration. Use I H part numbers in ordering.
Unnumbered parts in the illustrations are the same as corresponding parts shown with numbers.

REF. NO.	PART NUMBER	DESCRIPTION	SERIAL NUMBER	NO. REQ'D
		RADIATOR AND CONNECTIONS		
	259 440 R91	Radiator Complete		1
		(Composed of:		
		1 Tank 5 941 DB		
		1 Spacer 5 944 DA		
		1 Spacer 5 945 DA		
		3 Nut 29 899 D		
		2 Stiffener 42 534 D		
		2 Gasket 42 537 D		
		1 Core 42 538 DA		
		1 Stiffener 42 599 D		
		1 Stiffener 42 600 D		
		1 Cock 42 605 D		
		1 Clip 42 914 D		
		1 Tank 259 594 R1		
		1 Gasket 259 595 R1		
		1 Flange 259 596 R1		
		1 Cap 259 599 R91		
		1 Clamp and Tapping Block 259 603 R91		
		1 Handle 259 604 R1		
		1 Standpipe 259 607 R91		
		1 Tube, Complete 259 608 R11		
		1 Housing 259 609 R1		
		1 Valve 259 610 R91		
		1 Cover 259 611 R1		
		1 Tube 259 612 R11		
		8 Washer 103 319		
		45 Washer 103 321		
		16 Washer 103 323		
		8 Screw 179 796		
		22 Screw 179 839		
		22 Screw 179 840		
		1 Screw 179 841		
		12 Screw 179 385		
		4 Screw 179 887)		
1	259 604 R1	Radiator Cap Clamp Handle		1
2	259 603 R91	Radiator Cap Clamp and Tapping Block		1
3	259 599 R91	Radiator Cap with Gasket, 259 598 R2		1
4	259 598 R2	Radiator Cap Gasket		1
5	259 596 R1	Radiator Cap Filler Neck Flange		1
	179 796	Cap Screw, 1/4 x 1" N.C. Hex Head		8
	103 319	Lock Washer, 1/4"		8
6	259 595 R1	Radiator Cap Filler Neck Flange Gasket		1
7	259 594 R1	Water Tank, Upper		1
8	43 144 D	Name Plate (International)		1
	262 735 R1	Screw, No. 8 - 15 x 3/8" Oval Head		4
9	42 603 DA	Radiator Grille with Screen, 49 106 D		1
	179 835	Cap Screw, 3/8 x 5/8" N.C. Hex Head		16
	103 321	Lock Washer, 3/8"		16
	Q 1 504	Washer, 13/32" I.D. x 7/8" O.D. x No. 16 Gauge		16
10	5 945 DA	Radiator Core Spacer, R.H.		1
	179 885	Cap Screw, 1/2 x 1-1/2" N.C. Hex Head		6
	179 887	Cap Screw, 1/2 x 1-3/4" N.C. Hex Head		2
	103 323	Lock Washer, 1/2"		8

CHASSIS

REF. NO.	PART NUMBER	DESCRIPTION	SERIAL NUMBER	NO. REQ'D.
		RADIATOR AND CONNECTIONS—Continued		
11	42 538 DA	Radiator Core with Radiator Repair Tube, 42 589 D		1
12	42 589 D	Radiator Repair Tube		X
13	42 537 D	Radiator Gasket		2
14	42 534 D	Radiator Core Stiffener, Front		2
	179 840	Cap Screw, 3/8 x 1-1/8" N.C. Hex Head		12
	179 839	Cap Screw, 3/8 x 1" N.C. Head		12
	103 321	Lock Washer, 3/8"		24
15	42 599 D	Radiator Core Stiffener, Upper Rear		1
	179 839	Cap Screw, 3/8 x 1" N.C. Hex Head		10
	103 321	Lock Washer, 3/8"		10
16	5 944 DA	Radiator Core Spacer, L.H.		1
	179 885	Cap Screw, 1/2 x 1-1/2" N.C. Hex Head		6
	179 887	Cap Screw, 1/2 x 1-3/4" N.C. Hex Head		2
	103 323	Lock Washer, 1/2"		8
17	259 611 R1	Radiator Overflow Pressure Valve Housing Cover		1
18	259 610 R91	Pressure Valve		1
19	259 609 R1	Radiator Overflow Pressure Valve Housing		1
	179 841	Cap Screw, 3/8 x 1-1/4" N.C. Hex Head		1
	103 321	Lock Washer, 3/8"		1
20	259 608 R11	Pressure Valve Housing Inlet Tube with 2 Connector Nuts, 29 899 D		1
21	259 607 R91	Radiator Overflow Standpipe with Connector Nut, 29 899 D		1
22	259 612 R11	Pressure Valve Housing Drain Tube with Connector Nut, 29 899 D		1
23	42 914 D	Pressure Valve Housing Drain Clip		1
	179 837	Cap Screw, 3/8 x 3/4" N.C. Hex Head		1
	103 321	Lock Washer, 3/8"		1
24	42 536 D	Radiator Inlet Elbow Gasket		1
25	251 089 R1	Radiator Inlet Elbow		1
	179 841	Cap Screw, 3/8 x 1-1/4" N.C. Hex Head		3
	103 321	Lock Washer, 3/8"		3
26	91 406 HA	Radiator Inlet Hose Clamp		4
27	42 614 D	Radiator Inlet Hose (2-3/8" I.D. x 2-7/8" Long, 3 Ply)		2
28	251 090 R1	Radiator Inlet Elbow Tube		1
29	256 863 R1	Fan Housing Sheet, R.H.		1
	179 835	Cap Screw, 3/8 x 5/8" N.C. Hex Head		5
	103 321	Lock Washer, 3/8"		5

X - As Required.

REF. NO.	PART NUMBER	DESCRIPTION	SERIAL NUMBER	NO. REQ'D.
		RADIATOR AND CONNECTIONS—Continued		
30	256 862 R1	Fan Housing Sheet, L.H.		1
	179 835	Cap Screw, 3/8 x 5/8" N.C. Hex Head		5
	103 321	Lock Washer, 3/8"		5
31	42 537 D	Radiator Gasket		2
32	5 941 DB	Water Tank, Lower		1
33	32 181 D	Radiator Outlet Flange Gasket		1
34	6 442 D	Radiator Outlet Flange		1
	179 885	Cap Screw, 1/2 x 1-1/2" N.C. Hex Head		2
	103 323	Lock Washer, 1/2"		2
35	46 677 D	Radiator Outlet Pipe		1
36	42 614 D	Radiator Outlet Hose (2-3/8" I.D. x 2-7/8" Long, 3-Ply)		2
37	91 406 HA	Radiator Outlet Hose Clamp		4
38	42 605 D	Radiator Drain Cock		1
39	29 899 D	Connector Nut		3
40	42 600 D	Radiator Core Stiffener, Lower Rear		1
	179 840	Cap Screw, 3/8 x 1-1/8" N.C. Hex Head		10
	103 321	Lock Washer, 3/8"		10
	49 106 D	Radiator Grille Screen		2

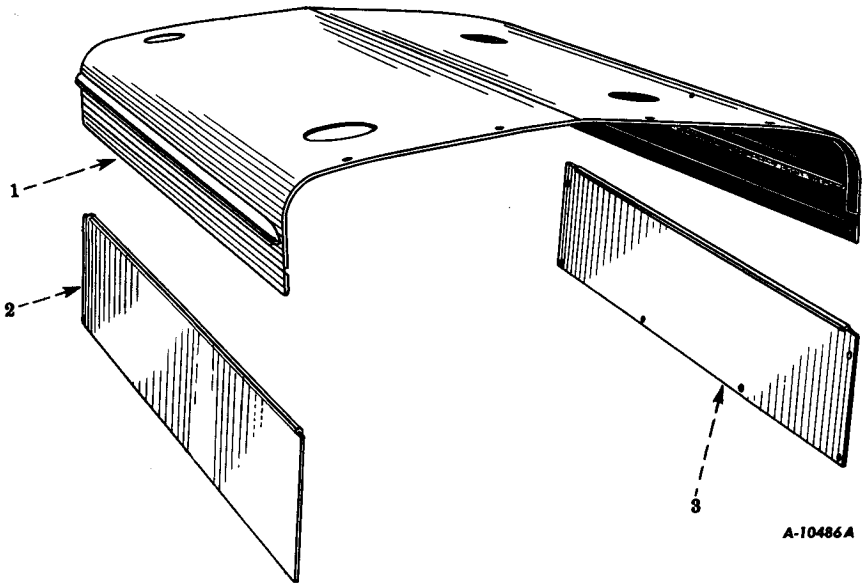

Reference numbers only are shown in illustration. Use I H part numbers in ordering.
Unnumbered parts in the illustrations are the same as corresponding parts shown with numbers.

HOOD AND SIDE SHEETS

1	251 632 R11	Hood Sheet with Reinforcement	1
	179 838	Cap Screw, 3/8 x 7/8" N.C. Hex Head	8
	114 684	Slotted Screw, 3/8 x 1-1/4" N.C. Flat Head	2
	114 689	Slotted Screw, 3/8 x 1/2" N.C. Flat Head	2
	220 066	Hex Nut, 3/8"	4
	103 321	Lock Washer, 3/8"	
	Q 1 504	Washer, 13/32" I.D. x 7/8" O.D. x No. 16 Gauge	
2	58 378 D	Engine Side Sheet, L.H.	1
	179 837	Cap Screw, 3/8 x 3/4" N.C. Hex Head	6
	103 321	Lock Washer, 3/8"	6
3	42 594 D	Engine Side Sheet, R.H.	1
	179 837	Cap Screw, 3/8 x 3/4" N.C. Hex Head	6
	103 321	Lock Washer, 3/8"	6
	1 627 Y	Hood Grommet (Electric Lighting - Special)	
		(Tractors Equipped with Bull Dozer)	2

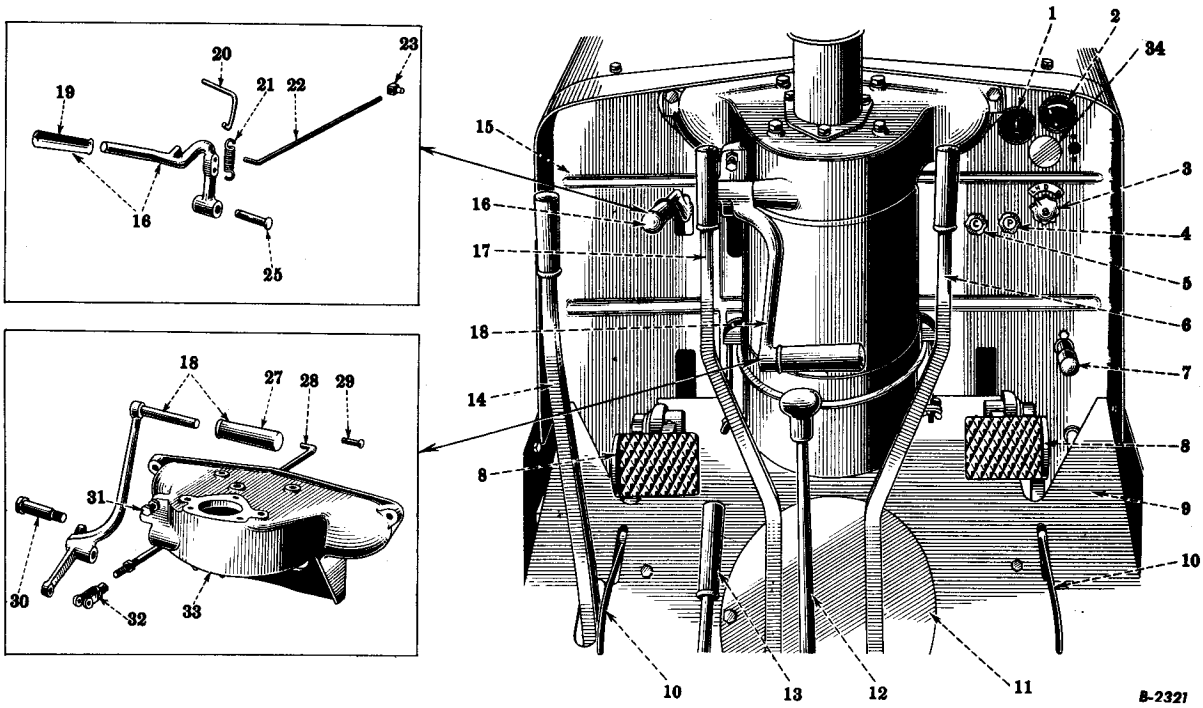

Reference numbers only are shown in illustration. Use I H part numbers in ordering.
Unnumbered Parts in the illustration are the same as corresponding parts shown with numbers.

INSTRUMENTS, PANEL, CONTROL LEVERS AND BRAKE PEDALS

1	42 383 DA	Ammeter (See Wiring-Batteries, Generator, Starting Motor,	
		Starting Switch and Mounting)	1
2	258 634 R91	Oil Pressure Gauge with Clamp, 60 805 D	1
	103 089	Hex Nut, No. 12 - 24 N.C.	2
	125 750	Lock Washer, No. 12	2
3	57 311 DX	Lighting Switch, Complete (See Lighting Switch)	1
4	255 069 R11	Starting Primer Control Rod with Button	
		(See Starting Primer Attachment)	1
5	255 933 R91	Choke Control Rod with Button, 41 954 D and Rod, 58 203 D	1
6	257 618 R22	Steering Clutch Hand Lever, R.H., Complete	1
		(Composed of:	
		1 Handle 41 597 DA	
		2 Bushing 42 175 D	
		1 Screw 55 377 D	
		1 Nut 220 068	
		1 Lever §257 618 R2	
		1 Pin 257 620 R1)	
	147 587	Front Link Pin Washer, 23/32" I.D. x 1-3/8" O.D. x	
		No. 13 Gauge	1
	103 385	Cotter Pin, 1/8 x 1"	1
7	64 931 H	Starting Switch	1
	181 309	Cap Screw, 1/4 x 1/2" N.F. Hex Head	2
	103 024	Hex Nut, 1/4" N.F.	2
	103 319	Lock Washer, 1/4"	2
8	5 815 D	Steering Brake Pedal Pad and Rod	2

§ - Not Supplied Separately.

REF. NO.	PART NUMBER	DESCRIPTION	SERIAL NUMBER	NO. REQ'D
		INSTRUMENTS, PANEL, CONTROL LEVERS AND BRAKE PEDALS—Continued		
9	42 553 DXA	Engine Clutch Cover with Tapping Blocks		1
	179 839	Cap Screw, 3/8 x 1" N.C. Hex Head		10
	103 321	Lock Washer, 3/8"		10
10	5 818 D	Steering Brake Pedal Ratchet Pawl		2
11	42 547 D	Engine Clutch Inspection Cover		1
	179 835	Cap Screw, 3/8 x 5/8" N.F. Hex Head		3
	103 321	Lock Washer, 3/8"		3
12	42 512 DAX	Gear Shift Lever with 2 Plugs, 172 529 (Not L.H. Drive Control)		1
13	257 616 R12	Hi-Lo Gear Shift Lever with Handle, 41 597 DA		1
14	9 785 DX	Engine Clutch Hand Lever with Pin, 69 076 D		1
	16 140 R1	Cap Screw, 5/8 x 2-1/2" N.F. Hex Head		1
	103 030	Hex Nut, 5/8"		1
	103 325	Lock Washer, 5/8"		1
	103 373	Cotter Pin, 3/32 x 3/4"		1
15	58 199 DA	Dash and Cowl, Complete		1
		(Composed of:		
		1 Anchor §42 550 D		
		1 Cowl §42 556 D		
		2 Block §42 873 D		
		2 Spacer 51 502 D		
		1 Bracket 52 411 D		
		1 Dash 58 379 DC)		
	350 517 R1	Welding Grommet, 3/8"		6
	251 392 R1	Welding Grommet, 1/2"		2
	179 889	Cap Screw, 1/2 x 2" N.C. Hex Head		2
	103 323	Lock Washer, 1/2"		2
16	9 015 DAXA	Compression Release Lever with Handle, 41 597 DA		
		(Optional with 9 635 DX)		1
17	257 617 R22	Steering Clutch Hand Lever, L.H., Complete		1
	147 587	Front Link Pin Washer, 23/32" I.D. x 1-3/8" O.D. x		
		No. 13 Gauge		1
	103 385	Cotter Pin, 1/8 x 1"		1
		(Composed of:		
		1 Handle 41 597 DA		
		2 Bushing 42 175 D		
		1 Screw 55 377 D		
		1 Nut 220 068		
		1 Lever §257 617 R2		
		1 Pin 257 620 R1)		
18	8 831 DAXA	Governor Control Lever with Handle, 41 597 DA		1
19	41 597 DA	Compression Release Lever Handle (1 - Required with 9 015 DAX)		1
20	52 405 D	Compression Release Lever Return Spring Link		1
	103 384	Cotter Pin, 1/8 x 3/4"		1
21	52 404 D	Compression Release Lever Return Spring		1
22	58 205 D	Compression Release Rod		1
	103 026	Hex Nut, 3/8" N.F.		1
	103 384	Cotter Pin, 1/8 x 3/4"		1
23	48 906 D	Compression Release Rod Adjusting Block		1
	103 373	Cotter Pin, 3/32 x 3/4"		1

§ - Not Supplied Separately.

REF. NO.	PART NUMBER	DESCRIPTION	SERIAL NUMBER	NO. REQ'D
		INSTRUMENTS, PANEL, CONTROL LEVERS AND BRAKE PEDALS—Continued		
25	H 4 213	Compression Release Lever Pivot Pin		1
27	41 597 DA	Governor Control Lever Handle		1
28	255 039 R1	Governor Control Rod		1
	103 028	Hex Nut, 1/2"		1
	103 384	Cotter Pin, 1/8 x 3/4"		1
29	15 041 H	Governor Control Rod Adjusting Yoke Pin		1
	103 384	Cotter Pin, 1/8 x 3/4"		1
30	52 403 D	Governor Control Lever Shaft		1
31	55 748 D	Governor Control Lever Stop Screw		1
	220 066	Hex Nut, 3/8" N.C.		1
32	15 033 H	Governor Control Rod Adjusting Yoke		1
33	251 628 R1	Control Housing and Air Cleaner Top		1
	179 881	Cap Screw, 1/2 x 1" N.C. Hex Head		2
	179 884	Cap Screw, 1/2 x 1-3/8" N.C. Hex Head		2
	103 323	Lock Washer, 1/2"		9
34	67 136 D	Heat Indicator - 170° - 220° (Will Work for 255 977 R91)		1
34	63 785 D	Heat Indicator (130°-160°)		
		(Used with Attachment 256 013 R91 Only)		1
	16 445 D	Oil Pressure Gauge Tube Clip Felt		1
	29 898 D	Oil Pressure Gauge Tube Coupling Nut		1
	29 898 D	Oil Pressure Gauge Tube Coupling Elbow Nut		1
	41 954 D	Choke Control Rod Button		1
	42 175 D	Steering Clutch Hand Lever Bushing		4
	42 493 D	Oil Pressure Gauge Tube Coupling Elbow		1
	42 493 DX	Oil Pressure Gauge Tube Coupling Elbow with Nut, 29 898 D		1
	51 502 D	Dash Spacer (Will Work for 30 148 D)		2
	52 405 D	Compression Release Lever Return Spring Link		1
	52 411 D	Compression Release Lever Bracket		1
	55 377 D	Clutch Hand Lever Adjusting Screw		2
	58 203 D	Choke Control Rod		1
	58 379 DC	Dash		1
	59 990 DX	Oil Pressure Gauge Tube with Nut, 29 898 D		1
	59 991 D	Oil Pressure Gauge Tube Clip		1
	110 500	Screw, No. 10 - 24 x 1/2" (Slotted) Round Head		1
	110 633	Hex Nut, No. 10 - 24 NC		1
	106 497	Lock Washer, No. 10		1
	60 805 D	Oil Pressure Gauge Clamp		1
	250 466 R1	Ammeter Clamp		1
	254 753 R1	Thermostat Seal		2
	256 013 R91	Low Boiling Point Thermostat and Heat Indicator Attachment		
		(Special) (Consists of 2 Thermostats 261 590 R91 and 1		
		Indicator, 63 785 D and 2 Seals, 254 753 R1)		1
	261 590 R91	Thermostat (130°-150°) (Will Work for 255 715 R92)		
		(Used with Low Boiling Point Attachment 256 013 R91)		2

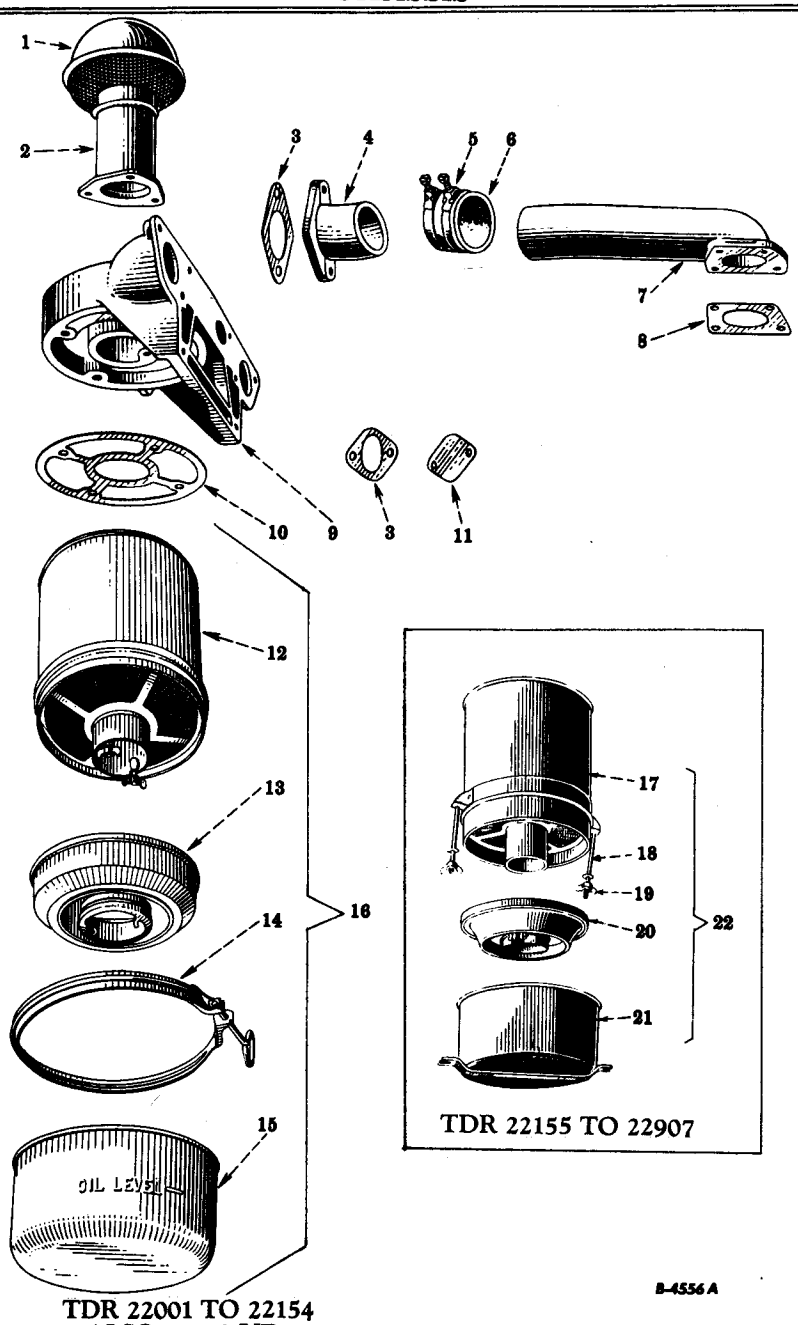

TDR 22001 TO 22154
ALSO 22908 UP

Reference numbers only are shown in illustration. Use I H part numbers in ordering.
Unnumbered parts in the illustrations are the same as corresponding parts shown with numbers.

AIR CLEANER (Donaldson, 10-inch) AND CONNECTIONS

1	49 364 DA	X-1539-1	Air Intake Cap	1
2	58 213 D		Air Pipe with Flange (Not Air Pipe Extension)	1
	179 838		Cap Screw, 3/8 x 7/8" N.C., Hex Head	3
	103 321		Lock Washer, 3/8"	3
3	58 210 D		Air Cleaner Pipe Rear Gasket	1
3	58 210 D		Air Cleaner Top Cover Gasket	1

REF. NO.	PART NUMBER	MFR'S. NUMBER	DESCRIPTION	SERIAL NUMBER	NO. REQ'D
			AIR CLEANER (Donaldson, 10-inch) AND CONNECTIONS—Continued		
4	8 830 D		Air Cleaner Pipe, Rear		1
	179 884		Cap Screw, 1/2 x 1-3/8" N.C., Hex Head		1
	103 323		Lock Washer, 1/2"		1
5	58 218 D		Air Cleaner Pipe Hose Clamp (3-25/32" Dia.)		2
6	58 209 D		Air Cleaner Pipe Hose		1
7	251 629 R11		Air Cleaner Pipe Front with Flange		1
	179 838		Cap Screw, 3/8 x 7/8" N.C., Hex Head		4
8	251 631 R1		Air Cleaner Pipe Front Gasket		1
9	251 628 R1		Control Housing and Air Cleaner Top		1
	179 881		Cap Screw, 1/2 x 1" N.C., Hex Head		2
	179 884		Cap Screw, 1/2 x 1-3/8" N.C., Hex Head		3
	103 323		Lock Washer, 1/2"		5
10	58 185 D		Air Cleaner Gasket		1
11	58 214 D		Air Cleaner Top Cover		1
	179 883		Cap Screw, 1/2 x 1-1/4" N.C., Hex Head		1
	181 431		Cap Screw, 1/2 x 1-1/2" N.F., Hex Head		1
	103 028		Hex Nut, 1/2" N.F.		1
	103 323		Lock Washer, 1/2"		2
12	259 712 R91	P-9487	Body with 2 Wing Nuts	TDR 22001 to 22154 ⊛	1
13	252 986 R91	P-7073	Tray	TDR 22001 to 22155 ⊛	1
14	252 988 R91	P-5978	Oil Cup Retaining Clamp	TDR 22001 to 22154 ⊛	1
15	252 987 R91	P-7081	Oil Cup	TDR 22001 to 22154 ⊛	1
16	259 453 R91	A-1055	Air Cleaner, Complete(Donaldson, 10-inch)		
			(Will work for 256 763 R91)	TDR 22001 to 22154 ⊛	1
			(Composed of:		
			1 Tray 252 986 R91		
			1 Oil Cup 252 987 R91		
			1 Clamp 252 988 R91		
			1 Body 259 712 R91		
			1 Instructions 1001 181 R3)		
	187 152		Cap Screw, 1/2 x 5" N.C. Hex Head		4
	103 323		Lock Washer, 1/2"		4
17	59 416 D	P-3752	Body, Complete	TDR 22155 to 22907	1
18	13 584 R1	P-1517	Side Rod Bolt	TDR 22155 to 22907	2
19	103 128		Wing Nut, 5/16 x 2"	TDR 22155 to 22907	2
20	67 119 D	P-4891	Air Cleaner Housed Screen and Baffle	TDR 22155 to 22907	1
21	45 904 DB	P-3296	Oil Cup	TDR 22155 to 22907	1
22	256 763 R91		Air Cleaner, Complete (Donaldson, 10-inch)		
			(Order 259 453 R91)	TDR 22155 to 22907	1
			(Composed of:		
			2 Side Rod Bolt 13 584 R1		
			1 Body 59 416 D		
			1 Oil Cup 45 904 DB		
			1 Housed Screen and Baffle 67 119 D		
			2 Wing Nut 103 128		
			1 Instructions 1001 181 R3)		

⊛- Also 22908 up.

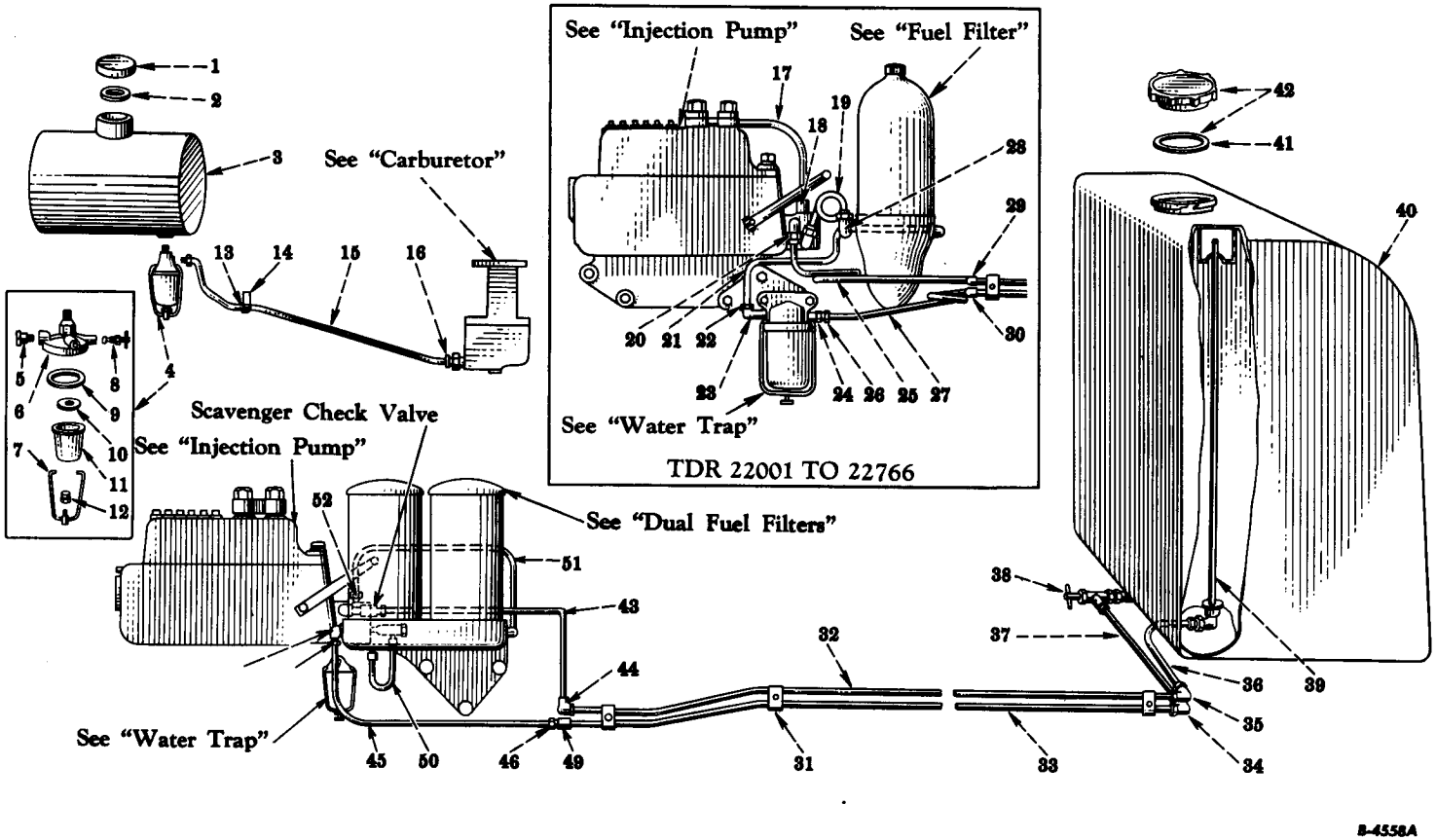

FUEL AND GASOLINE TANKS, AND PIPINGS

Reference numbers only are shown in illustration. Use I H part numbers in ordering.
Unnumbered parts in the illustrations are the same as corresponding parts shown with numbers.

CHASSIS

REF. NO.	PART NUMBER	DESCRIPTION	SERIAL NUMBER	NO. REQ'D.
		FUEL AND GASOLINE TANKS, AND PIPINGS		
1	23 995 DA	Gasoline Tank Filler Cap		1
2	23 977 DA	Gasoline Tank Filler Cap Gasket		1
3	41 574 DCX	Gasoline Tank with Filler Cap, 23 995 DA		1
	179 837	Cap Screw, 3/8 x 3/4" N.C. Hex Head		4
	103 321	Lock Washer, 3/8"		4
4	51 066 DC	Gasoline Strainer, Complete		1
		(Composed of:		
		1 Gasket 13 193 D		
		1 Screen 13 194 D		
		1 Bail 17 564 D		
		1 Nut and Cap 17 565 DA		
		1 Stem 52 855 D		
		1 Body 54 486 D		
		1 Bowl 51 344 V)		
4	51 066 DCX	Gasoline Strainer with Coupling Nut, 29 899 D		1
5 to 12		See Gasoline Strainer		
13	16 445 D	Gasoline Tube Clip Felt		1
14	23 125 D	Gasoline Tube Clip		1
15	256 633 R11	Gasoline Tube (Gasoline Strainer to Carburetor) with 2 Coupling Nuts, 29 899 DB		1
16	29 899 DB	Coupling Nut (Gasoline Tube to Carburetor)		2
17	253 583 R21	Fuel Inlet Pipe with Nut, 37 165 D		1
18	37 165 D	Fuel Inlet Pipe Nut		1
19	254 422 R21	Fuel Filter Outlet Pipe with 2 Nuts and 2 Nipples		1
20	37 165 D	Fuel Return Tube Nut		2
21	259 459 R11	Fuel Pipe with 2 Nuts, 37 165 D (Water Trap to Fuel Filter)		1
22	37 165 D	Fuel Pipe Nut (Water Trap to Fuel Filter)		2
23	50 607 DX	Water Trap Outlet Pipe Elbow with Nut, 37 165 D		1
24	38 026 DMX	Water Trap Inlet Connector with Nut, 37 165 D		1
25	256 260 R11	Fuel Return Tube with 2 Nuts, 37 165 D		
		(Fuel Pump to Fuel Pipe)	TDR 22001 to 22766	1
26	37 165 D	Fuel Pipe Nut (Fuel Pipe to Water Trap)		2
27	259 460 R11	Fuel Pipe with 2 Nuts, 37 165 D		
		(Fuel Pipe to Water Trap)	TDR 22001 to 22766	1

REF. NO.	PART NUMBER	DESCRIPTION	SERIAL NUMBER	NO. REQ'D
		FUEL AND GASOLINE TANKS, AND PIPINGS—Continued		
28	22 510 D	Fuel Filter Outlet Pipe Elbow		1
29	42 406 DX	Fuel Return Pipe Elbow with Nut, 37 165 D (Front End of Fuel		
		Return Pipe)		1
30	42 406 DX	Fuel Pipe Elbow with Nut, 37 165 D (Front End of		
		Fuel Pipe)	TDR 22001 to 22766	1
31	42 385 D	Fuel Pipe Clamp		6
	181 374	Cap Screw, 3/8 x 1-1/2" N.F. Hex Head		3
	103 026	Hex Nut, 3/8"		3
	103 321	Lock Washer, 3/8"		3
32	50 148 D	Fuel Return Pipe		1
33	50 148 D	Fuel Pipe		1
34	48 232 D	Fuel Tube Elbow (Rear End of Fuel Pipe)		1
35	48 233 D	Fuel Return Tube Elbow (Rear End of Fuel Return Pipe)		1
36	28 899 DB	Fuel Return Tube (Fuel Tank to Return Pipe)		1
37	48 438 D	Fuel Tube (Shut-off Valve to Fuel Pipe)		1
38	48 231 D	Fuel Tank Shut-off Valve		1
39	42 384 DXA	Fuel Return Sand Pipe with Elbow, 48 233 D		1
40	42 400 DEX	Fuel Tank, Complete		1
		(Composed of:		
		1 Cap 42 387 D		
		1 Tank §42 400 DE		
		1 Gasket 42 495 D)		
	179 879	Cap Screw, 1/2 x 3/4" N.C. Hex Head		6
	179 885	Cap Screw, 1/2 x 1-1/2" N.C. Hex Head		2
	103 323	Lock Washer, 1/2"		8
41	42 495 D	Fuel Tank Filler Cap Gasket		1
42	42 387 D	Fuel Tank Filler Cap with Gasket, 42 495 D		1
	29 899 D	Coupling Nut		3
	37 165 D	Coupling Nut		2
43	260 837 R11	Fuel Return Pipe with 2 Nuts, 37 165 D		
		(Scavenging Check Valve to Fuel Return Pipe)	TDR 22767 Up	1
44	37 165 D	Fuel Return Pipe Nut		2
45	260 838 R11	Fuel Pipe with 2 Nuts, 37 165 D		
		(Fuel Pipe to Fuel Filter)	TDR 22767 Up	1
46	37 165 D	Fuel Pipe Nut		2
47	37 323 DX	Fuel Pipe Elbow with Nut, 37 165 D	TDR 22767 Up	1
48	37 165 D	Fuel Pipe Elbow Nut		1
49	56 597 DX	Fuel Pipe Straight Fitting (Front End of Fuel Pipe)	TDR 22767 Up	1
50	260 736 R11	Auxiliary Filter to Primary Pump Pipe with		
		2 Nuts and 2 Nipples	TDRM 22876 Up	1
51	260 737 R11	Primary Pump to Final Filter Pipe with		
		2 Nuts, 37 165 D	TDRM 22876 Up	1
52	37 165 D	Primary Pump to Final Filter Pipe Nut		2

§ - Not Supplied Separately.

CHASSIS

REF. NO.	PART NUMBER	MFR'S. NUMBER	DESCRIPTION	SERIAL NUMBER	NO. REQ'D.
			GASOLINE STRAINER (Imperial Brass Mfg. Co.)		
	51 066 DCX	43121	Gasoline Strainer with Coupling Nut		1
5	29 899 D	81-L	Coupling Nut		1
6	54 486 D	43121-1	Strainer Body with Tube		1
7	17 564 D	26984	Bail Assembly		1
8	52 855 D	43078-3	Stem Assembly		1
9	13 193 D	25857	Strainer Gasket		1
10	13 194 D	25854	Strainer Screen		1
11	13 191 D		Strainer Bowl (Brass) (Special)		1
11	51 344 V	25858	Strainer Bowl (Glass)		1
12	17 565 DA	27208	Nut and Cap Assembly		1

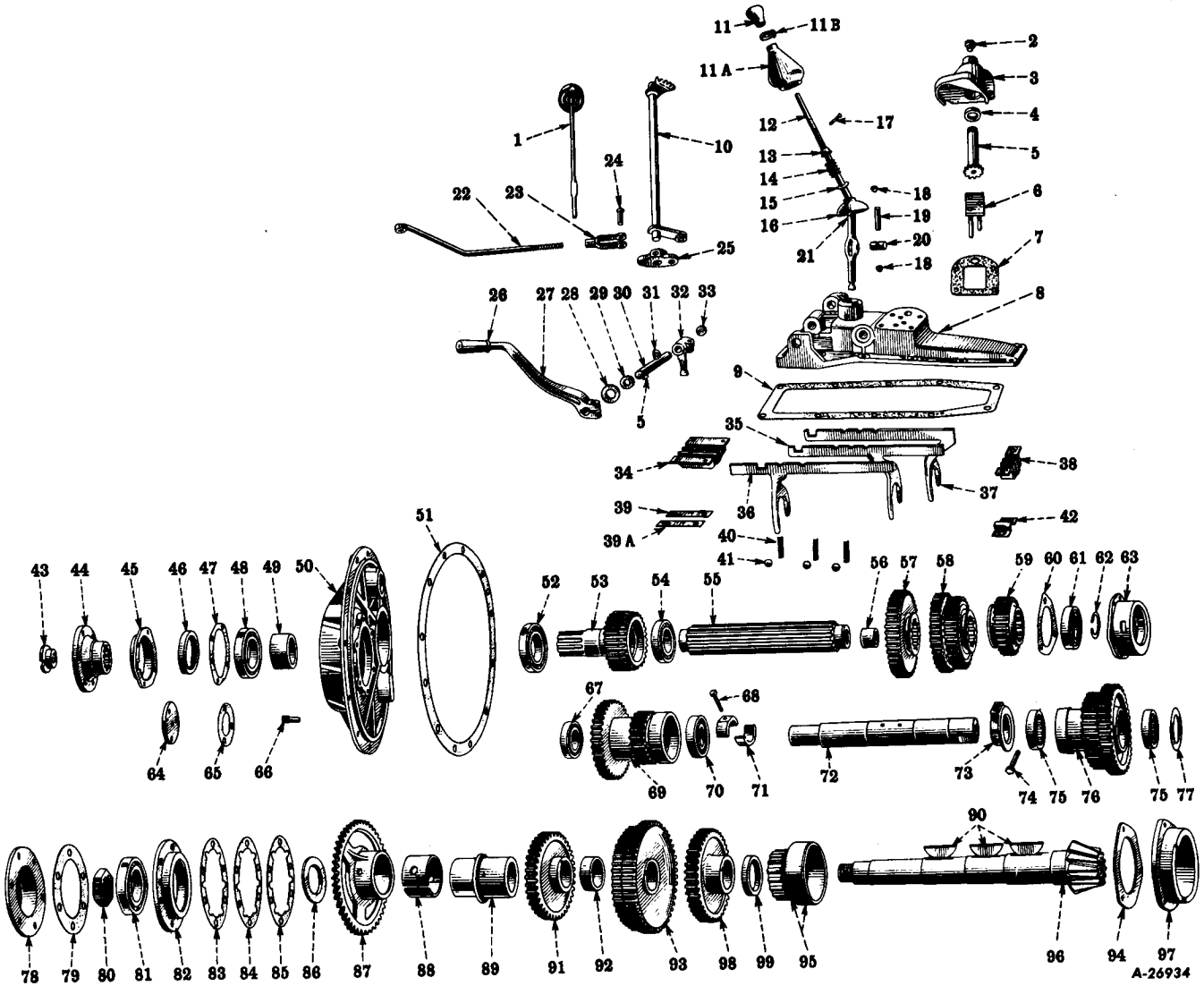

TRANSMISSION, GEAR SHIFTER MECHANISM

Reference numbers only are shown in illustration. Use I H part numbers in ordering.
Unnumbered parts in the illustrations are the same as corresponding parts shown with numbers.

REF. NO.	PART NUMBER	DESCRIPTION	SERIAL NUMBER	NO. REQ'D
		TRANSMISSION GEAR SHIFTER MECHANISM		
1	41 694 DA	Transmission Oil Level Rod with Plug and Shield		1
2	172 545	Gear Shifter Lock Camshaft Plug, 1" Expansion		1
3	9 788 DX	Gear Shifter Lock Cam Housing with Plug and		
		Oil Seal, 17 053 D		1
	179 816	Cap Screw, 5/16 x 3/4" N.C. Hex Head		1
	179 839	Cap Screw, 3/8 x 1" N.C. Hex Head		4
	103 320	Lock Washer, 5/16"		1
	103 321	Lock Washer, 3/8"		4
4	17 053 D	Gear Shifter Lock Cam Oil Seal		1
5	69 079 D	Gear Shifter Lock Camshaft and Gear		1
5	106 751	Hi-Lo Gear Shifter Lever Key (Woodruff No. 9)		1
6	69 071 DAX	Gear Shifter Lock Pin Plate		1
7	69 080 D	Gear Shifter Lock Cam Housing Gasket		1
8	9 787 DX	Gear Shifter Housing with Plug, 172 545 and Plug, 172 529		1
	179 838	Cap Screw, 3/8 x 7/8" N.C. Hex Head		4
	179 840	Cap Screw, 3/8 x 1-1/8" N.C. Hex Head		2
	179 885	Cap Screw, 1/2 x 1-1/2" N.C. Hex Head		4
	103 321	Lock Washer, 3/8"		6
	103 323	Lock Washer, 1/2"		4
9	42 511 D	Gear Shifter Housing Gasket		1
10	69 096 D	Gear Shifter Lock Shaft		1
11	53 717 DA	Gear Shift Lever Ball		1
11A	64 603 D	Gear Shift Boot		1
11B	64 604 D	Gear Shift Boot Clamp		1
	132 768	Stove Bolts, No. 8 - 32 x 3/4" Round Head		
		(Cadmium Plated)		1
	134 536	Stove Bolt Nut, No.8 - 32 (Cadmium Plated)		1
12	42 512 DAX	Gear Shift Lever with 2 Plugs, 172 529		
		(Not L.H. Drive Control)		1
13	11 373 D	Gear Shifter Swivel Housing Shield Spring Stop, Upper		1
	104 073	Rivet, 3/16 x 1-1/4" Round Head		1
14	29 547 D	Gear Shifter Swivel Housing Shield Spring		1
15	17 700 D	Gear Shifter Swivel Housing Shield Spring Stop, Lower		1
16	42 496 DX	Gear Shifter Swivel Housing Shield with Bushing,		
		20 887 DA and One Rivet, 104 073		1
17	6 220 T	Gear Shifter Swivel Housing Shield Spring Stop Pin		
		(Order 3/16 x 1-/4" Round Head Rivet)		1
18	172 529	Gear Shifter Lever Swivel Shaft Expansion Plug, 5/8"		4
19	256 919 R11	Gear Shifter Lever Swivel Shaft, Small with 2 Plugs, 172 529		1
20	256 918 R11	Gear Shifter Lever Swivel Shaft, Large with 2 Plugs, 172 529		1
21	20 887 DA	Gear Shifter Swivel Housing Shield Bushing		1
22	69 097 DX	Gear Shifter Lock Shaft Connecting Rod		1
	103 027	Hex Nut, 7/16 - 20 N.F.		1
23	25 574 H	Gear Shifter Lock Shaft Rod Yoke		1

REF. NO.	PART NUMBER	DESCRIPTION	SERIAL NUMBER	NO. REQ'D
		TRANSMISSION GEAR SHIFTER MECHANISM—Continued		
24	103 497	Gear Shifter Lock Shaft Rod Yoke Pin		1
	103 373	Cotter Pin, 3/32 x 3/4"		1
	109 461	Gear Shifter Lock Cam Housing Lubrication Fitting		2
	109 462	Gear Shifter Lock Shaft Bracket Lubrication Fitting		1
	172 529	Gear Shifter Housing Expansion Plug, 5/8"		1
25	9 783 D	Gear Shifter Lock Shaft Bracket		1
	181 364	Cap Screw, 3/8 x 1" N.F. Hex Head		2
	103 026	Hex Nut, 3/8" N.F.		2
	103 321	Lock Washer, 3/8"		2
26	41 597 DA	Hi-Lo Gear Shifter Lever Handle		
		(1 Required when 257 616 R12 is Used)		1
27	257 616 R12	Hi-Lo Gear Shifter Lever with Handle, 41 597 DA		1
28	64 609 D	Hi-Lo Gear Shift Arm Shaft Washer		1
29	17 053 D	Hi-Lo Gear Shifter Arm Shaft Oil Seal		1
30	64 607 D	Hi-Lo Gear Shift Arm Shaft		1
31	64 608 D	Hi-Lo Gear Shift Key		1
32	64 606 D	Hi-Lo Gear Shift Arm		1
	181 429	Cap Screw, 1/2 x 1-1/4" N.F. Hex Head		1
	103 323	Lock Washer, 1/2"		1
32	64 606 D	Hi-Lo Gear Shift Arm with Shaft		1
	181 429	Cap Screw, 1/2 x 1-1/4" N.F. Hex Head		1
	103 323	Lock Washer, 1/2"		1
33	172 545	Hi-Lo Gear Shift Arm Shaft Plug		1
34	42 517 D	Gear Shifter Rail Guide, Front with Support		1
	179 837	Cap Screw, 3/8 x 3/4" N.C. Hex Head - Thru Support		4
35	69 108 DB	Second and Third Gear Shift Rail and Fork		1
36	69 106 DA	Hi-Lo Gear Shift Rail and Fork		1
37	69 107 DB	Low and Reverse Gear Shift Rail and Fork		1
38	42 518 D	Gear Shifter Rail Guide, Rear with Support		1
	179 837	Cap Screw, 3/8 x 3/4" N.C. Hex Head - Thru Support		2
39	62 780 DX	Gear Shifter Rail Guide Support Bolt Lock		1
		(Composed of:		
		1 Support 62 780 D		
		1 Lock 62 781 D		
		1 Lock 62 782 D		
39	62 782 D	Gear Shifter Rail Guide Bolt Lock, Front, R.H.		1
39A	62 781 D	Gear Shifter Rail Guide Bolt Lock, Front, L.H.		1
40	69 069 D	Gear Shifter Rail Poppet Ball Spring		3
41	31 326 H	Gear Shifter Rail Poppet Ball (3/4" Steel Ball)		3
42	62 780 D	Gear Shifter Rail Guide Support Bolt Lock, Rear		1

REF. NO.	PART NUMBER	DESCRIPTION	SERIAL NUMBER	NO. REQ'D
		TRANSMISSION (Ball Bearing) (6 Speeds Forward, 2 Reverse)		
43	258 534 R1	Transmission Driving Flange Nut		1
44	259 447 R1	Transmission Driving Flange		1
45	5 841 DX	Transmission Driving Shaft Bearing Retainer,		
		Front with Oil Seal, 52 348 D		1
	179 839	Cap Screw, 3/8 x 1" N.C. Hex Head		4
	103 321	Lock Washer, 3/8"		4
46	52 348 D	Transmission Driving Shaft Oil Seal		1
47	41 666 D	Transmission Driving Shaft Bearing Retainer Gasket		1
48	ST 273	Transmission Driving Shaft Bearing, Front (IH-C-270)		
		(Will Work for 48 173 D)		1
48	48 173 D	Transmission Driving Shaft Bearing Front (N.D. 3214-YL)		
		(Optional with ST 273)		1
49	41 690 D	Transmission Driving Shaft Bearing Spacer		1
50	64 620 D	Tranmission End Cover, with Stud, 64 621 D	TDR 22001 to 22953	1
	179 885	Cap Screw, 1/2 x 1-1/2" N.C. Hex Head		8
	220 068	Hex Nut, 1/2" N.C.		8
	103 028	Hex Nut, 1/2" N.F.		2
	103 323	Lock Washer, 1/2"		14
50	260 171 R1	Transmission End Cover	TDR 22954 Up	1
	179 885	Cap Screw, 1/2 x 1-1/2" N.C. Hex Head		8
	220 068	Hex Nut, 1/2" N.C.		4
	103 323	Lock Washer, 1/2"		14
	103 028	Hex Nut, 1/2" N.F.		2
51	41 668 DA	Transmission End Cover Gasket		1
52	ST 274	Transmission Driving Shaft Bearing, Rear (IH-C-275)		
		(Will Work for 68 467 D)		1
52	68 467 D	Transmission Driving Shaft Bearing, Rear (N.D. 3 215 YL)		
		(Optional with ST 274)		1
53	259 446 R11	Transmission Drive Shaft with Gear, 29 Teeth, and Plug		1
54	ST 269	Transmission Spline Shaft Bearing, Front (IH-C-260)		
		(Will Work for 18 511 D)		1
54	18 511 D	Transmission Spline Shaft Bearing, Front (N.D. 3 212 YL)		
		(Optional with ST 269)		1
55	41 654 DX	Transmission Spline Shaft with Bushing, 41 671 D		1
56	41 671 D	Power Take-off Shaft Bushing		1
57	251 610 R1	Hi-Lo Range Sliding Gear, 41 and 29 Teeth		1
58	41 649 DB	2nd, 3rd, 5th and 6th Speed Sliding Gear, 33 and 37 Teeth		1
59	251 613 R1	Reverse, 1st and 4th Speed Sliding Gear, 28 Teeth		1
60	53 899 D	Transmission Spline Shaft Bearing Retainer, Rear		1
	179 840	Cap Screw, 3/8 x 1-1/8" N.C. Hex Head		3
	103 321	Lock Washer, 3/8"		3
61	ST 335	Transmission Spline Shaft Bearing, Rear (IH-PPC-260)		
		(Will Work for 68 465 D)		1
61	68 465 D	Transmission Spline Shaft Bearing, Rear (N.D. 77 512)		
		(Optional with ST 335)		1

REF. NO.	PART NUMBER	DESCRIPTION	SERIAL NUMBER	NO. REQ'D
		TRANSMISSION (Ball Bearing)—Continued (6 Speeds Forward, 2 Reverse)		
62	40 888 D	Transmission Spline Shaft Bearing Snap Ring		1
63	8 389 DA	Transmission Spline Shaft Bearing Cage, Rear		1
64	41 670 D	Hi-Lo Range Idler Shaft Retainer		1
	179 839	Cap Screw, 3/8 x 1" N.C. Hex Head		3
	181 429	Cap Screw, 1/2 x 1-1/4" N.F. Hex Head		1
	114 606	Lock Washer, 3/8"		3
	114 608	Lock Washer, 1/2"		1
65	41 660 D	Hi-Lo Range Idler Shaft Retainer Gasket		1
66	18 585 DA	Transmission End Cover Dowel Pin		1
67	ST 264	Hi-Lo Range Idler Gear Bearing Front (IH-C-250)		
		(Will Work for 75 238 H)		1
67	75 238 H	Hi-Lo Range Idler Gear Bearing, Front (N.D. 3210)		
		(Optional with ST 264)		1
68	18 501 DA	Hi-Lo Range Idler Bearing Retainer Bolt		1
	119 252	Hex Nut, 3/8" N.F. (Castellated)		1
	103 373	Cotter Pin, 3/32 x 3/4"		1
69	251 611 R1	Hi-Lo Range Idler Gear, 23 and 36 Teeth		1
70	ST 269	Hi-Lo Range Idler Bearing (IH-C-260)		
		(Will Work for 18 511 D)		1
70	18 511 D	Hi-Lo Range Idler Ball Bearing, Rear (N.D. 3212)		
		(Optional with ST 269)		1
71	56 465 D	Hi-Lo Range Idler Bearing Retainer, Rear (Split Type)		2
72	56 467 D	Hi-Lo Range Idler Shaft		1
73	8 334 D	Transmission Reverse Idler Gear Oil Scoop		1
74	21 572 D	Transmission Reverse Idler Gear Oil Scoop Bolt		1
75	41 681 D	Transmission Reverse Idler Gear Bearing (Hyatt 1210 TS)		
		(Optional with 70 039 D)		2
75	70 039 D	Transmission Reverse Idler Bearing (Bower M-1210-EL)		
		(Optional with 41 681 D)		2
76	251 614 R1	Transmission Reverse Idler Gear, 31 and 37 Teeth		1
77	41 658 D	Transmission Reverse Idler Thrust Washer		1
78	5 842 DA	Bevel Pinion Shaft Bearing Retainer, Front	TDR 22001 to 22953	1
	179 890	Cap Screw, 1/2 x 2-1/4" N.C. Hex Head		4
	103 323	Lock Washer, 1/2"		4
78	260 169 R1	Bevel Pinion Shaft Bearing Retainer, Front	TDR 22954 Up	1
	179 889	Cap Screw, 1/2 x 2" N.C. Hex Head		6
	103 323	Lock Washer, 1/2"		6
79	41 662 DA	Bevel Pinion Shaft Bearing Retainer Front Gasket	TDR 22001 to 22953	1
79	260 170 R1	Bevel Pinion Shaft Bearing Retainer Front Gasket	TDR 22954 Up	1
80	258 534 R1	Bevel Pinion Shaft Front Bearing Retaining Nut	TDR 22001 to 22953	1
80	260 163 R1	Bevel Pinion Shaft Front Bearing Retaining Nut	TDR 22954 Up	1
81	258 518 R91	Bevel Pinion Shaft Bearing, Front (N.D. 5513 W)	TDR 22001 to 22953	1
81	260 162 R91	Bevel Pinion Shaft Bearing, Front (N.D. 5612 W)	TDR 22954 Up	1
82	9 457 D	Bevel Pinion Shaft Bearing Cage, Front	TDR 22001 to 22953	1
82	260 164 R1	Bevel Pinion Shaft Bearing Cage, Front	TDR 22954 Up	1

REF. NO.	PART NUMBER	DESCRIPTION	SERIAL NUMBER	NO. REQ'D
		TRANSMISSION (Ball Bearing)—Continued (6 Speeds Forward, 2 Reverse)		
83	41 678 DA	Bevel Pinion Shaft Bearing Cage, Front Shim (Heavy)	TDR 22001 to 22953	1
83	260 165 R1	Bevel Pinion Shaft Bearing Cage, Front Shim (Heavy)	TDR 22954 Up	1
84	41 679 DA	Bevel Pinion Shaft Bearing Cage, Front Shim (Medium)	TDR 22001 to 22953	1
84	260 166 R1	Bevel Pinion Shaft Bearing Cage, Front Shim (Medium)	TDR 22954 Up	1
85	41 680 DA	Bevel Pinion Shaft Bearing Cage, Front Shim (Light)	TDR 22001 to 22953	1
85	260 167 R1	Bevel Pinion Shaft Bearing Cage, Front Shim (Light)	TDR 22954 Up	1
86	5 845 DA	Bevel Pinion Shaft Bearing Spacer, Front	TDR 22001 to 22953	1
86	260 161 R1	Bevel Pinion Shaft Bearing Spacer, Front	TDR 22954 Up	1
	250 306 R1	Bevel Pinion Shaft Bearing Cage, Front Shim (Extra Light)	TDR 22001 to 22953	1
	260 168 R1	Bevel Pinion Shaft Bearing Cage, Front Shim (Extra Light)	TDR 22954 Up	1
87	262 636 R11	Transmission Oiler Gear, 47 Teeth with Bushing, 41 672 DA (Will Work for 5 837 DBX)		1
88	41 672 DA	Transmission Oiler Gear Bushing		1
89	5 843 DA	Transmission Oiler Gear Sleeve		1
90	41 661 D	Bevel Pinion Shaft Key		3
91	41 646 DA	Transmission, 3rd and 6th Speed Gear, 39 Teeth		1
92	41 667 D	Bevel Pinion Shaft Spacer		1
93	251 612 R1	Transmission, 1st, 2nd, 4th, and 5th Speed Gear, 43 and 48 Teeth		1
94	41 663 D	Bevel Pinion and Shaft Bearing Retainer, Rear		1
	179 841	Cap Screw, 3/8 x 1-1/4" N.C. Hex Head		3
	103 321	Lock Washer, 3/8"		3
95	53 009 D	Bevel Pinion and Shaft Bearing, Rear (Hyatt BU 5215 Z) (Will Work for 41 673 D) (Optional with 70 038 D)		1
95	70 038 D	Bevel Pinion and Shaft Bearing Rear (Bower MU-5215-CL) (Optional with 53 009 D)		1
	64 621 D	Bevel Pinion Shaft Bearing Cage, Front Stud	TDR 22001 to 22953	2
96	256 788 R91	Bevel Pinion and Shaft with Drive Bevel Gear (Will Work for 251 615 R2 and 256 789 R1)	TDR 22001 to 22953	1
96	260 160 R92	Bevel Pinion and Shaft with Drive Bevel Gear (Will Work for 260 159 R1 and 256 789 R1)	TDR 22954 Up	1
97	5 839 DA	Bevel Pinion and Shaft Bearing Cage, Rear		1
98	41 647 DB	Transmission Reverse Gear, 40 Teeth		1
99	52 893 D	Transmission Reverse Gear Spacer		1

REF. NO.	PART NUMBER	DESCRIPTION	SERIAL NUMBER	NO. REQ'D
		TRANSMISSION (Ball Bearing)—Continued (6 Speeds Forward, 2 Reverse)		
	260 226 R91	Bevel Pinion and Shaft Front Bearing Improvement		
		Package	TDR 22001 to 22953	1
		(Consists of:		
		2 Drive Bevel Gear Bearing Cage Gasket	40 929 D	
		1 Hi-Lo Range Idler Shaft Gasket	41 660 D	
		1 Transmission Driving Shaft Bearing Retainer Gasket	41 666 D	
		1 Transmission End Cover Gasket	41 668 DA	
		1 Gear Shifter Housing Gasket	42 511 D	
		1 Main Frame Cover Gasket	42 552 D	
		2 Drive Bevel Gear Bearing Cage Gasket	51 238 D	
		1 Bevel Pinion and Shaft Bearing, Rear	53 009 D	
		4 Drive Bevel Gear Shim, Heavy	251 620 R1	
		4 Drive Bevel Gear Shim, Light	251 621 R1	
		1 Bevel Pinion and Shaft with Drive Bevel Gear	260 160 R92	
		1 Bevel Pinion and Shaft Bearing Spacer	260 161 R1	
		1 Bevel Pinion and Shaft Bearing, Front	260 162 R91	
		1 Bevel Pinion and Shaft Front Bearing Retainer Nut	260 163 R1	
		1 Bevel Pinion Shaft Bearing Cage, Front	260 164 R1	
		1 Bevel Pinion Shaft Bearing Cage, Front Shim (Heavy)	260 165 R1	
		1 Bevel Pinion Shaft Bearing Cage, Front Shim (Medium)	260 166 R1	
		2 Bevel Pinion Shaft Bearing Cage, Front Shim (Light)	260 167 R1	
		3 Bevel Pinion Shaft Bearing Cage, Front Shim (Extra Light)	260 168 R1	
		1 Bevel Pinion Shaft Bearing Retainer - Front	260 169 R1	
		1 Bevel Pinion Shaft Bearing Retainer Front Gasket	260 170 R1	
		1 Transmission End Cover	260 171 R1	
		6 Cap Screw, 1/2 x 2" N.C. Hex Head	179 889	
		6 Lock Washer, 1/2"	103 323)	

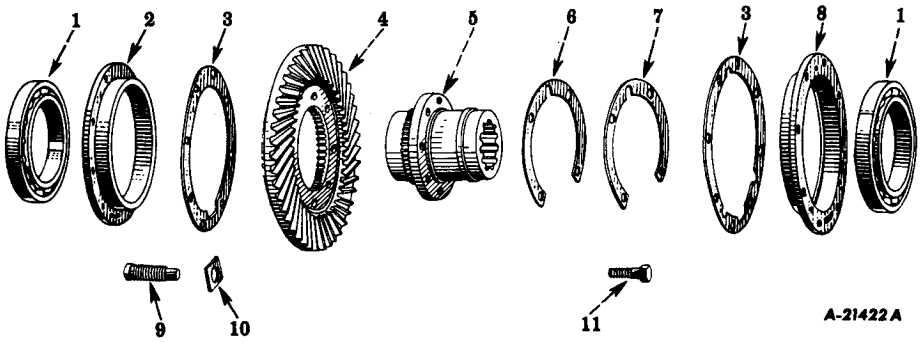

Reference numbers only are shown in illustration. Use I H part numbers in ordering.

FINAL DRIVE—DRIVE BEVEL GEAR

1	54 134 D	Drive Bevel Gear Ball Bearing (N.D. 3 L-30 A)		
		(Optional with 261 661 R91)		2
1	261 661 R91	Drive Bevel Gear Ball Bearings (SKF 467 271)		
		(Optional with 54 134 D)		2
2	8 532 D	Drive Bevel Gear Bearing Cage, L.H.		1
3	51 238 D	Drive Bevel Gear Bearing Cage Gasket		2
4	256 789 R1	Drive Bevel Gear (Order 256 788 R91) (See Transmission)		1
5	251 618 R1	Drive Bevel Gear Hub		1
6	251 620 R1	Drive Bevel Gear Shim, Heavy		4
7	251 621 R1	Drive Bevel Gear Shim, Light		X
8	8 531 DA	Drive Bevel Gear Bearing Cage, R.H.		1
9	40 930 D	Drive Bevel Gear Deflection Set Screw		1
	128 116	Hex Nut, 1-1/8" N.F.		1
10	40 931 D	Drive Bevel Gear Deflection Set Screw Lock		1
11	256 801 R1	Drive Bevel Gear Bolt (Order 260 660 R91)	TDR 22001 to 22932	8
11	260 616 R1	Drive Bevel Gear Bolt	TDR 22933 Up	8
	260 617 R1	Drive Bevel Gear Bolt Lockwire	TDR 22933 Up	4
	260 660 R91	Drive Bevel Gear Bolt Service Package		
		(Consists of 8 Bolts, 260 616 R1 and 4 Lockwire,		
		260 617 R1	TDR 22001 to 22932	1

X - As Required.

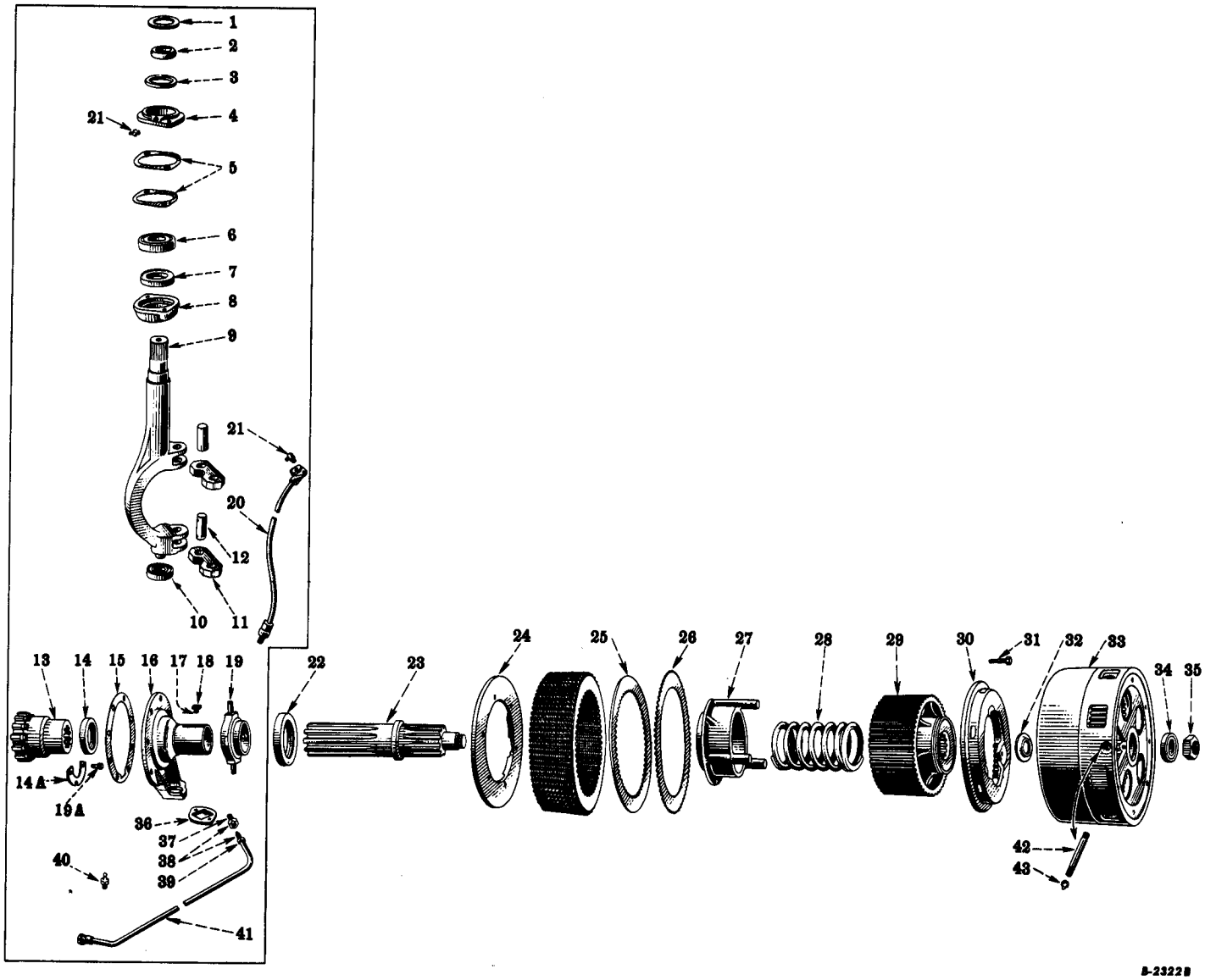

FINAL DRIVE—STEERING CLUTCH RELEASE SHAFT AND MECHANISM

Reference numbers only are shown in illustration. Use I H part numbers in ordering.
Unnumbered parts in the illustrations are the same as corresponding parts shown with numbers.

REF. NO.	PART NUMBER	DESCRIPTION	SERIAL NUMBER	NO. REQ'D
		FINAL DRIVE—STEERING CLUTCH RELEASE SHAFT AND MECHANISM		
	40 891 DD	Steering Clutch, Complete		2
		(Composed of:		
		1 Plate 5 711 DC		
		1 Retainer 5 712 DB		
		1 Plate 5 715 D		
		1 Hub 9 717 D		
		17 Disc 40 882 D		
		18 Facing 40 883 DC		
		3 Bolt 54 968 D		
		1 Spring 68 462 D		
		9 Lock Washer 103 323		
		6 Cap Screw 179 883)		
	59 009 DB	Steering Clutch (Bi-Metallic) Complete (Special)		
		(Used with 61 903 D)		2
		(Composed of:		
		1 Plate 5 711 DC		
		1 Retainer 5 712 DB		
		1 Plate 5 715 D		
		1 Hub 9 717 D		
		19 Disc 40 882 D		
		3 Bolt 54 968 D		
		20 Disc 58 957 D		
		1 Spring 68 462 D		
		9 Lock Washer 103 323		
		6 Cap Screw 179 883)		
1	56 017 D	Steering Clutch Release Fork Upper Bearing Felt Retainer		2
2	56 010 D	Steering Clutch Release Lever Spacer		2
3	56 008 D	Steering Clutch Release Fork Upper Bearing Felt		2
4	8 680 DX	Steering Clutch Release Fork Upper Bearing Retainer		
		with Lubricator, 109 461 and Plug, 103 883		2
	179 862	Cap Screw, 7/16 x 1-1/2" N.C. Hex Head		4
	103 322	Lock Washer, 7/16"		4
5	56 009 D	Steering Clutch Release Fork Upper Bearing Cage Gasket		2
6	ST 205 A	Steering Clutch Release Fork Upper Ball Bearing (IH-C-235)		
		(Will Work for 20 308 D)		2
6	20 308 D	Steering Clutch Release Fork Upper Ball Bearing		
		(ND 3207) (Optional with ST 205)		2
7	21 969 D	Steering Clutch Release Fork Upper Bearing Oil Seal		2
8	8 682 DX	Steering Clutch Release Fork Upper Bearing Cage with Oil		
		Seal, 21 969 D		2
9	57 099 D	Steering Clutch Release Fork		2
10	M 89 541	Steering Clutch Release Fork Lower Ball Bearing (ND 8505)		2
11	56 005 D	Steering Clutch Release Collar Shifter Link		4
12	56 007 D	Steering Clutch Release Collar Shifter Link Pin		4
	103 386	Cotter Pin, 1/8 x 1-1/4"		8
13	251 625 R11	Steering Clutch Shaft Coupling, 12 Teeth, with Expansion		
		Plug		2
14	40 880 D	Steering Clutch Shaft Coupling Oil Seal		2

REF. NO.	PART NUMBER	DESCRIPTION	SERIAL NUMBER	NO. REQ'D
		FINAL DRIVE—STEERING CLUTCH RELEASE SHAFT AND MECHANISM—Continued		
14A	251 626 R1	Steering Clutch Shaft Coupling Retainer		4
15	40 929 D	Drive Bevel Gear Bearing Cage Cap Gasket		2
16	8 742 DAX	Drive Bevel Gear Bearing Cage Cap, 8 742 DA, L.H. with		
		Oil Seal, 40 880 D		1
	179 929	Cap Screw, 5/8 x 1-3/4" N.C. Hex Head		6
	103 030	Hex Nut, 5/8" N.F.		2
	103 325	Lock Washer, 5/8"		6
16	8 743 DAX	Drive Bevel Gear Bearing Cage Cap, 8 743 DA, R.H. with		
		Oil Seal, 40 880 D		1
	179 929	Cap Screw, 5/8 x 1-3/4" N.C. Hex Head		6
	103 030	Hex Nut, 5/8" N.C.		2
	103 325	Lock Washer, 5/8"		8
17	56 006 D	Steering Clutch Release Collar Key Pin		2
18	56 013 DX	Steering Clutch Release Collar Key with Pin, 56 006 D		2
19	56 018 D	Steering Clutch Release Collar		2
19A	260 618 R1	Steering Clutch Shaft Coupling Retainer Bolt		12
20	57 103 DX	Steering Clutch Release Bearing Grease Tube, Complete		2
	13 243 R1	Machine Bolt, 1/4 x 3/4" N.C.		4
	220 064	Hex Nut, 1/4" N.C.		4
	103 319	Lock Washer, 1/4"		4
21	109 461	Steering Clutch Release Fork Upper Bearing Lubricator		2
22	53 233 DA	Steering Clutch Release Thrust Bearing (Aetna)		2
23	251 624 R1	Steering Clutch Shaft		2
24	5 715 D	Steering Clutch Hub Plate		2
	179 887	Cap Screw, 1/2 x 1-1/4" N.C. Hex Head		12
	103 323	Lock Washer, 1/2"		12
25	40 883 DC	Steering Clutch Friction Disc, 58 Teeth (Raybestos)		36
25	58 957 D	Steering Clutch (Bi-Metallic) Friction Disc,		
		58 Teeth (Special) (Used with 61 903 D)		40
26	40 882 D	Steering Clutch Driving Disc, 77 Teeth (Steel)		
		(38 Used with 61 903 D)		34
27	5 712 DB	Steering Clutch Pressure Spring Retainer		2
28	68 462 D	Steering Clutch Pressure Spring		1
29	9 717 D	Steering Clutch Hub		2
30	5 711 DC	Steering Clutch Pressure Plate		2
31	54 968 D	Steering Clutch Pressure Plate Dowel Bolt		6
	103 323	Lock Washer, 1/2"		6
32	53 742 DA	Steering Clutch Pilot Bearing Spacer		2
33	5 714 DB	Steering Clutch Drum (Order 5 714 DD)		2
33	5 714 DD	Steering Clutch Drum		2
	181 477	Cap Screw, 5/8 x 1-1/4" N.F. Hex Head		16
	103 325	Lock Washer, 5/8"		16
34	ST 333	Steering Clutch Pilot Bearing (IH-JCG-240)		
		(Will Work for 53 389 D)		2

REF. NO.	PART NUMBER	DESCRIPTION	SERIAL NUMBER	NO. REQ'D
		FINAL DRIVE—STEERING CLUTCH RELEASE SHAFT AND MECHANISM—Continued		
34	53 389 D	Steering Clutch Pilot Ball Bearing (ND 48 508)		
		(Optional with ST 333)		2
35	256 790 R1	Steering Clutch Pilot Bearing Retainer Nut		2
36	57 102 D	Steering Clutch Release Fork Lower Bearing Cap		2
	113 916	Slotted Bolt, 5/16 x 1-1/4" N.C. Flat Head		4
	220 065	Hex Nut, 5/16" N.C.		4
	103 320	Lock Washer, 5/16"		4
37	29 899 D	Steering Clutch Release Fork Lower Bearing Grease Tube		
		Connector Nut		2
38	35 252 DX	Steering Clutch Release Fork Lower Bearing Grease Tube		
		Connector, 35 252 D with Nut, 29 899 D		2
39	35 252 D	Steering Clutch Release Fork Lower Bearing Grease Tube		
		Connector		2
40	109 352	Steering Clutch Release Bearing Lubricator		
		(Alenite 1607) (Optional with 126 121)		2
40	126 121	Steering Clutch Release Bearing Lubricator (Lincoln 5003)		
		(Optional with 109 352)		2
41	57 101 DX	Steering Clutch Release Fork Lower Bearing Grease Tube		
		with Connector Nut, 29 899 D and Bracket		2
42	54 652 D	Steering Clutch Pilot Bearing Lubricator Pipe		2
43	Q 3 618	Steering Clutch Pilot Bearing Lubricator		2
	56 009 D	Steering Clutch Release Fork Upper Bearing Retainer		
		Gasket		2
	61 903 D	Steering Clutch (Bi-Metallic) Friction Disc Attachment		
		(Special) (Consists of 4 - 40 882 D and 40 0 58 957 D) ⊛		
	260 619 R1	Steering Clutch Shaft Coupling Retainer Bolt Lockwire		6
	103 883	Steering Clutch Release Fork Upper Bearing Retainer		
		Pipe Plug, 1/8"		1
	105 404	Steering Clutch Release Collar Close Nipple		2
	126 121	Steering Clutch Release Fork Lower Bearing Lubricator		2

⊛ (Factory Application - Order on Machine Order Form)
⊛ (Field Application - Order Through Regular Service Parts Channels)

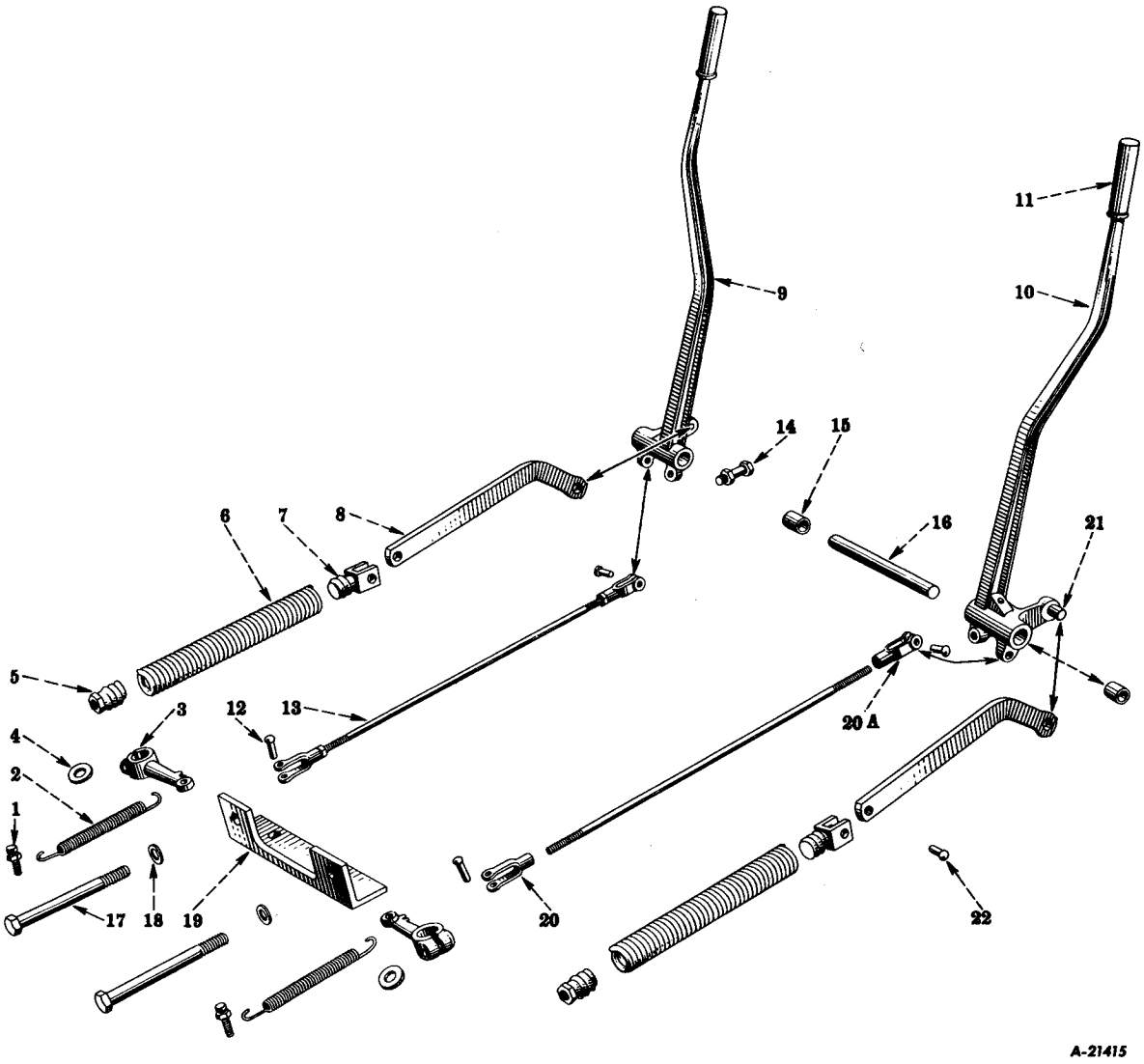

FINAL DRIVE—STEERING CLUTCH CONTROLS

Reference numbers only are shown in illustration. Use I H part numbers in ordering.
Unnumbered parts in the illustrations are the same as corresponding parts shown with numbers.

CHASSIS

REF. NO.	PART NUMBER	DESCRIPTION	SERIAL NUMBER	NO. REQ'D.
		FINAL DRIVE—STEERING CLUTCH CONTROLS		
1	41 768 D	Steering Clutch Release Lever Return Spring Anchor		2
	103 323	Lock Washer, 1/2"		2
2	57 288 D	Steering Clutch Release Lever Return Spring		2
3	8 679 DA	Steering Clutch Release Lever		2
	181 381	Cap Screw, 3/8 x 2-1/2" N.F. Hex Head		2
	103 026	Hex Nut, 3/8"		2
	103 321	Lock Washer, 3/8"		2
4	45 794 D	Steering Clutch Release Lever Retainer Washer		2
	181 429	Cap Screw, 1/2 x 1-1/4" N.F. Hex Head		2
	103 323	Lock Washer, 1/2"		2
5	257 623 R1	Steering Clutch Hand Lever Booster Spring Adjusting Nut		2
6	257 621 R11	Steering Clutch Hand Lever Booster Spring with Yoke, 257 622 R1 and Nut, 257 623 R1		2
7	257 622 R1	Steering Clutch Hand Lever Booster Spring Yoke		2
8	257 619 R1	Steering Clutch Hand Lever Booster Spring Link		2
9	257 617 R22	Steering Clutch Hand Lever, L.H., Complete		1
		(Composed of:		
		1 Handle 41 597 DA		
		2 Bushing 42 175 D		
		1 Screw 55 377 D		
		1 Nut 220 068		
		1 Lever §257 617 R2		
		1 Pin 257 620 R1)		
10	257 618 R22	Steering Clutch Hand Lever, R.H., Complete		1
		(Composed of:		
		1 Handle 41 597 DA		
		2 Bushing 42 175 D		
		1 Screw 55 377 D		
		1 Nut 220 068		
		1 Lever §257 618 R2		
		1 Pin 257 620 R1)		
11	41 597 DA	Steering Clutch Hand Lever Handle		2
12	15 041 H	Steering Clutch Operating Rod Yoke Pin		4
	103 373	Cotter Pin, 3/32 x 3/4"		4

§ - Not Supplied Separately.

REF. NO.	PART NUMBER	DESCRIPTION	SERIAL NUMBER	NO. REQ'D.
		FINAL DRIVE—STEERING CLUTCH CONTROLS—Continued		
13	63 230 DX	Steering Clutch Operating Rod with Adjusting Nut		2
	220 068	Hex Nut, 1/2"		2
	12 454 R1	Hex Nut, 1/2" (Left Hand Thread)		2
14	55 377 D	Steering Clutch Hand Lever Adjusting Screw		2
15	42 175 D	Steering Clutch Hand Lever Bushing		4
16	56 012 D	Steering Clutch Hand Lever Shaft		1
	179 826	Cap Screw, 5/16 x 2" N.C. Hex Head		1
	103 320	Lock Washer, 5/16"		1
17	257 624 R2	Steering Clutch Hand Lever Booster Spring Adjusting Bolt		2
18	257 625 R1	Steering Clutch Hand Lever Booster Spring Adjusting Bolt Washer		2
19	257 626 R1	Steering Clutch Hand Lever Booster Spring Anchor		1
	179 887	Cap Screw, 1/2 x 1-3/4" N.C. Hex Head		2
20	63 228 D	Steering Clutch Operating Rod Yoke (Left Hand Thread)		2
20A	63 229 D	Steering Clutch Operating Rod Yoke (Right Hand Thread)		2
21	257 620 R1	Steering Clutch Hand Lever Booster Spring Link Pin, Front		2
	147 587	Washer, 23/32" I.D. x 1-3/8" O.D. x No. 13 Gauge		2
	103 385	Cotter Pin, 1/8 x 1"		2
22	15 041 H	Steering Clutch Hand Lever Booster Spring Link Pin, Rear		2
	108 630	Cotter Pin, 1/8 x 7/8"		
	109 461	Steering Clutch Hand Lever Lubricator		2
	220 068	Hex. Nut, 1/2" N.C.		2

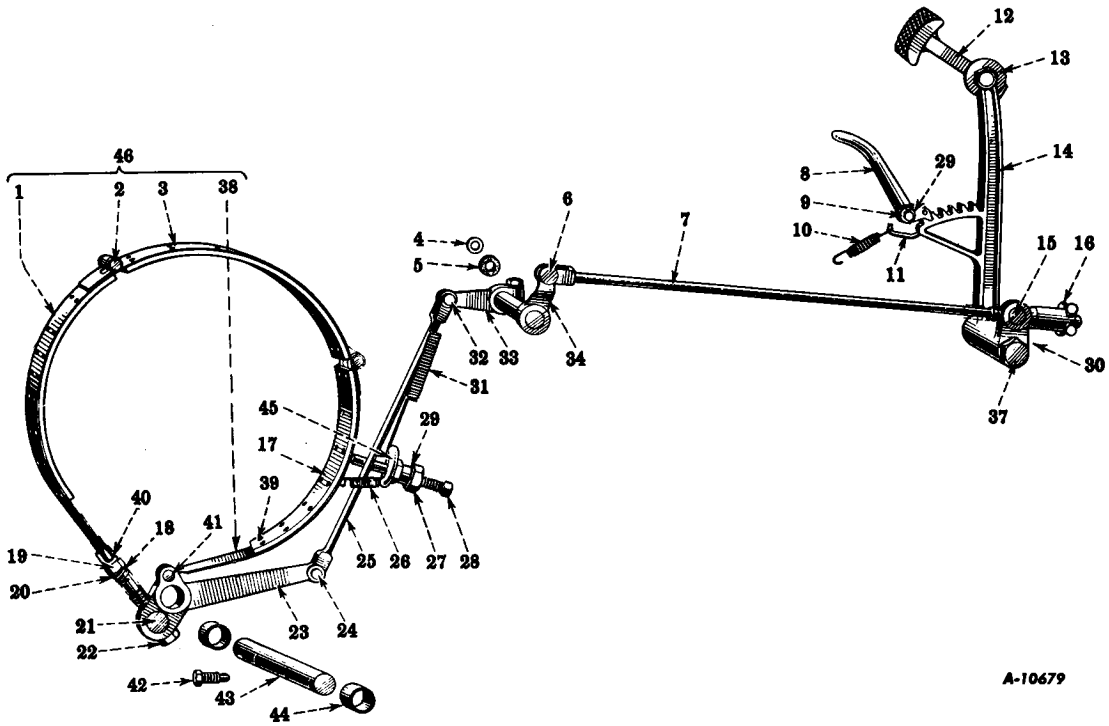

Reference numbers only are shown in illustration. Use I H part numbers in ordering.
Unnumbered parts in the illustrations are the same as corresponding parts shown with numbers.

FINAL DRIVE—STEERING BRAKES AND CONTROLS

1	60 258 DXA	Steering Brake Band, Rear with Woven Lining, Complete		2
		(Composed of:		
		1 Lining	§41 483 DA	
		1 Band	§68 536 D	
		13 Rivet	21 407 H	
		3 Rivet	61 175 V)	
2	60 259 D	Steering Brake Band Joint Pin		4
	103 386	Cotter Pin, 1/8 x 1-1/4"		4
3	60 257 DXA	Steering Brake Band, Center with Woven Lining, Complete		2
		(Composed of:		
		1 Lining	§41 483 DA	
		1 Band	§60 257 D	
		14 Rivet	21 407 H	
		2 Rivet	61 175 V)	
4	20 841 D	Steering Brake Inner Lever Key		2
5	41 519 D	Steering Brake Outer Lever Dirt Seal		2
6	15 041 H	Steering Brake Inner Rod End Pin, Lower		2
7	41 512 DA	Steering Brake Rod, Outer with End		2
8	5 818 D	Steering Brake Pedal Ratchet Pawl		2
9	41 523 D	Steering Brake Pedal Ratchet Pawl Stud		2
	108 630	Cotter Pin, 1/8 x 7/8"		2
	103 323	Lock Washer, 1/2"		2

§ - Not Supplied Separately.

REF. NO.	PART NUMBER	DESCRIPTION	SERIAL NUMBER	NO. REQ'D
		FINAL DRIVE—STEERING BRAKES AND CONTROLS—Continued		
10	41 935 D	Steering Brake Pedal Ratchet Pawl Spring		2
	179 816	Cap Screw, 5/16 x 3/4" N.C. Hex Head		2
	218 437	Hex Jam Nut, 5/16" N.C.		2
11	41 521 D	Steering Brake Pedal Ratchet Pawl Link, L.H.		1
	103 361	Cotter Pin, 1/16 x 1/2"		2
11	41 522 D	Steering Brake Pedal Ratchet Pawl Link, R.H.		1
	103 361	Cotter Pin, 1/16 x 1/2"		2
12	5 815 D	Steering Brake Pedal Pad and Rod		
		(NOTE: R.H. Side, not L.H. Drive Control)		2
13	41 524 D	Steering Brake Pedal Pad and Rod Swivel		2
	103 031	Hex Nut, 3/4" N.F.		2
	103 326	Lock Washer, 3/4"		2
14	5 816 DB	Steering Brake Pedal, L.H.		1
14	5 817 DB	Steering Brake Pedal, R.H.		1
15	41 508 D	Steering Brake Outer Rod Pivot Pin		2
16	5 812 D	Steering Brake Outer Rod Adjusting Knob		2
17	41 483 DA	Steering Brake Band Lining (Order 68 628 D)		6
17	68 628 D	Steering Brake Band Lining - Woven (Set of 3 Pieces with Rivets)		
		(Will Work for 41 483 D) (Consists of 2 Linings, 259 873 R91		
		and 1 Lining, 259 874 R91)		2
17	259 873 R91	Steering Brake Band Lining Package (Front or Rear)		
		(Consists of 1 Steering Brake Band Lining with 13 Short		
		Rivets, 21 407 H and 3 Rivets, 61 175 V)		4
17	259 874 R91	Steering Brake Band Lining Package (Center)		
		(Consists of 1 Steering Brake Band Lining with		
		14 Rivets, 21 407 H and 2 Rivets, 61 175 V)		2
18	41 496 D	Steering Brake Band Release Spring Washer		2
19	103 030	Follows Reference No. 22		
20	41 497 D	Steering Brake Band Release Spring		2
21	41 501 D	Steering Brake Band Adjusting Pin		2
22	41 499 D	Steering Brake Band Adjusting Bolt		2
	103 030	Hex Nut, 5/8" N.F.		2
23	5 801 DAX	Steering Brake Pivot Lever with 2 Bushings, 41 493 D		2
24	103 498	Steering Brake Outer Rod End Pin (Will Work for 15 041 H)		2
	108 630	Cotter Pin, 1/8 x 7/8"		2
25	41 514 D	Steering Brake Rod, Inner with Ends		2
26	56 475 D	Steering Brake Band Anchor Spring		2
26	56 478 D	Steering Brake Band Anchor Spring, 56 475 D with		
		2 Hooks, 56 576 D (Will Work for 41 494 D)		2
27	220 080	Follows Reference No. 28		
28	41 495 D	Steering Brake Band Set Screw		2
	220 080	Hex Nut, 5/8" N.C. (Cadmium Plated)		2
29	121 326	Follows Reference No. 45		
30	109 460	Steering Brake Pedal Shaft Lubricator		2
31	41 515 D	Steering Brake Release Spring		2
32	41 999 D	Steering Brake Inner Rod End Pin, Upper		2
	103 384	Cotter Pin, 1/8 x 3/4"		2

REF. NO.	PART NUMBER	DESCRIPTION	SERIAL NUMBER	NO. REQ'D.
		FINAL DRIVE—STEERING BRAKES AND CONTROLS—Continued		
33	5 813 DA	Steering Brake Lever, Inner		2
	179 886	Cap Screw, 1/2 x 1-5/8" N.C. Hex Head		2
	103 323	Lock Washer, 1/2"		2
34	5 814 D	Steering Brake Lever, Outer (Order 41 517 D or 41 518 D)		2
34	41 517 D	Steering Brake Lever, Outer, L.H. (5 814 D) with Shaft		1
34	41 518 D	Steering Brake Lever, Outer, R.H. (5 814 D) with Shaft		1
37	41 520 DA	Steering Brake Pedal Shaft		2
38	60 256 DXA	Steering Brake Band, Front with Woven Lining, Complete		2
		(Composed of:		
		1 Lining §41 483 D		
		1 Band §68 535 D		
		13 Rivet 21 407 H		
		3 Rivet 61 175 V)		
39	21 407 H	Steering Brake Band Rivet (.186 x 7/16" Brass)		80
39	61 175 V	Steering Brake Band Rivet (.186 x 5/8" Brass)		16
40	41 498 D	Steering Brake Band Adjusting Bolt Spacer		2
41	41 500 DA	Steering Brake Band Pivot Joint Pin		2
	103 409	Cotter Pin, 3/16 x 1-1/2"		2
42	41 491 D	Steering Brake Pivot Shaft Stud		2
	103 323	Lock Washer, 1/2"		2
43	41 492 D	Steering Brake Pivot Shaft		2
44	41 493 D	Steering Brake Pivot Lever Bushing		4
45	43 664 DB	Steering Brake Return Spring Anchor		2
	218 445	Hex Jam Nut, 1" N.C.		2
	121 326	Lock Washer, 1"		2
46	60 260 DA	Steering Brake Bands with Woven Lining, Complete		2
		(Composed of:		
		1 Band 60 256 DXA		
		1 Band 60 257 DXA		
		1 Band 60 258 DXA		
		2 Pin 60 259 D		
		2 Pin 103 386)		
	41 509 D	Steering Bracket Ratchet Pawl Stud Washer		2
	56 476 D	Steering Brake Band Anchor Spring Hook		4

§ - Not Supplied Separately.

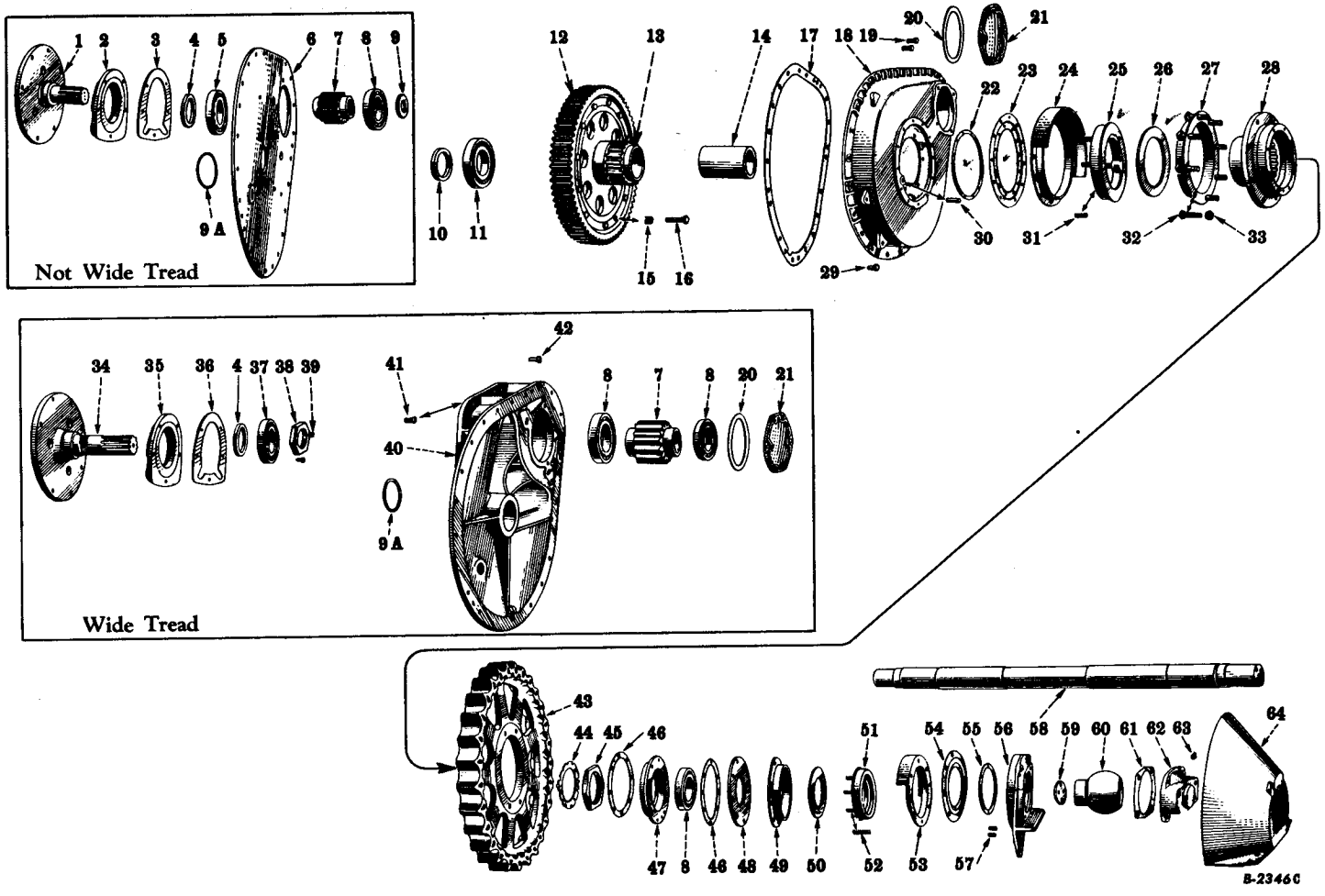

TRACK DRIVE—SPROCKET DRIVE, SHAFT, PINION AND SPROCKET, TRACK FRAME PIVOT SHAFT

Reference numbers only are shown in illustration. Use I H part numbers in ordering.
Unnumbered parts in the illustrations are the same as corresponding parts shown with numbers.

CHASSIS

REF. NO.	PART NUMBER	DESCRIPTION	SERIAL NUMBER	NO. REQ'D.
		TRACK DRIVE—SPROCKET DRIVE, SHAFT, PINION AND SPROCKET, TRACK FRAME PIVOT SHAFT		
1	41 467 DA	Sprocket Drive Pinion Shaft (Not Wide Tread)		2
2	9 470 DX	Sprocket Drive Pinion Inner Bearing Retainer,		
		with Oil Seal 41 436 D (Not Side Tread)		2
	181 431	Cap Screw, 1/2 x 1-1/2" N.F. Hex Head		10
	103 323	Lock Washer, 1/2"		10
3	64 808 D	Sprocket Drive Pinion Inner Bearing Retainer Gasket		
		(Not Wide Tread)		2
4	41 436 D	Sprocket Drive Pinion Oil Seal		2
5	ST 338	Sprocket Drive Pinion Inner Ball Bearing (IH-PL-295)		
		(Will Work for 42 238 D) (Not Wide Tread)		2
5	42 238 D	Sprocket Drive Pinion Inner Ball Bearing (ND 7 219)		
		(Not Wide Tread) (Optional with ST 338)		2
6	64 813 DX	Sprocket Drive Carrier Plate, L.H. (Not Wide Tread)		1
6	64 814 DX	Sprocket Drive Carrier Plate, R.H. (Not Wide Tread)		1
7	251 627 R1	Sprocket Drive Pinion, 13 Teeth		2
8	ST 336	Sprocket Drive Gear Ball Bearing, Outer (IH-L-295) (Will Work for 16 135 H)		2
8	16 135 H	Sprocket Drive Gear Ball Bearing, Outer (ND 1 219 YL) (Optional with ST 336)		2
8	ST 336	Sprocket Drive Pinion Inner Ball Bearing (Wide Thread)		
		(IH-L-295) (Will Work for 16 135 H)		2
8	16 135 H	Sprocket Drive Pinion Inner Ball Bearing (Wide Thread) (Optional with ST 336)		2
8	ST 336	Sprocket Drive Pinion Outer Ball Bearing (IH-L-295) (Will Work for 16 135 H)		2
8	16 135 H	Sprocket Drive Pinion Outer Ball Bearing (Optional with ST 336)		2
9	41 459 D	Sprocket Drive Pinion Outer Bearing Washer (Not Wide Tread)		2
	181 429	Cap Screw, 1/2 x 1-1/4" N.F.		4
	103 323	Lock Washer, 1/2"		4
9A	40 999 D	Track Frame Pivot Shaft Oil Seal Ring		2
10	41 889 D	Sprocket Drive Gear Bearing Spacer, Short		2
11	41 877 D	Sprocket Drive Gear Ball Bearing, Inner (ND 1222-100)		2
12	64 498 DA	Sprocket Drive Gear (68 Teeth) (Order 259 455 R91)		2
12	259 455 R91	Sprocket Drive Gear and Carrier, Complete		
		(Will work for 41 883 DB and 64 498 DA)		2
		(Composed of:		
		1 Nut 41 879 DA 12 Bolt 259 445 R1		
		§1 Carrier 41 883 DB 12 Nut 254 485 R1)		
		§1 Gear 64 498 DA		
13	41 883 DB	Sprocket Drive Gear Carrier (Order 259 455 R91)		2
13	259 454 R91	Sprocket Drive Gear Carrier and Nut (Order 259 455 R91)		2
14	41 890 D	Sprocket Drive Gear Bearing Spacer, Long		2
15	254 485 R1	Sprocket Drive Gear Dowel Bolt Nut		24
16	259 445 R1	Sprocket Drive Gear Carrier Dowel Bolt		24
17	64 812 D	Sprocket Drive Gear Cover Gasket		2
18	9 471 DAX	Sprocket Drive Gear Cover, with 2 Pins, 52 419 D		2
	181 433	Cap Screw, 1/2 x 1-3/4" N.F. Hex Head (Not Wide Tread)		28
	181 482	Cap Screw, 5/8 x 1-3/4" N.F. Hex Head (Not Wide Tread)		2
	181 435	Cap Screw, 1/2 x 2" N.F. Hex Head (Wide Tread)		28
	426 720	Cap Screw, 5/8 x 2-1/8" N.F. Hex Head (Wide Tread)		20
	179 931	Cap Screw, 5/8 x 2" N.C. Hex Head (Not Wide Tread)		2
	103 028	Hex Nut, 1/2" N.F.		28
	103 030	Hex Nut, 5/8" N.F.		20
	103 323	Lock Washer, 1/2"		28
	103 325	Lock Washer, 5/8"		20

§ - Not Supplied Separately

REF. NO.	PART NUMBER	DESCRIPTION	SERIAL NUMBER	NO. REQ'D.
		TRACK DRIVE—SPROCKET DRIVE, SHAFT, PINION AND SPROCKET, TRACK FRAME PIVOT SHAFT—Continued		
19	64 801 D	Cover to Main Frame Dowel Pin (Not Wide Tread)		4
20	64 807 D	Sprocket Drive Pinion Outer Bearing Cap Packing Ring		2
21	9 468 DX	Sprocket Drive Pinion Outer Bearing Cap,		
		with Ring, 64 807 D		2
	179 884	Cap Screw, 1/2 x 1-3/8" N.C. Hex Head		12
	103 323	Lock Washer, 1/2"		12
22	41 605 D	Sprocket Drive Oil Seal Diaphragm Retainer		2
	179 793	Cap Screw, 1/4 x 5/8" N.C. Hex Head		24
	103 319	Lock Washer, 1/4"		24
23	41 604 D	Sprocket Drive Oil Seal Diaphragm		2
24	41 610 D	Sprocket Drive Oil Seal Guard with Dirt Deflector		2
	179 837	Cap Screw, 3/8 x 3/4" N.C. Hex Head		24
	103 321	Lock Washer, 3/8"		24
25	5 833 D	Sprocket Drive Oil Seal Pressure Plate		2
26	41 609 D	Sprocket Drive Oil Seal Packing		2
27	41 606 D	Sprocket Drive Oil Seal Dirt Deflector		2
28	41 882 D	Sprocket Carrier		2
29	46 337 D	Cover to Plate Dowel Pin (Not Wide Tread)		2
30	52 419 D	Sprocket Drive Oil Seal Pressure Plate Anchor Pin		4
31	41 608 D	Sprocket Drive Oil Seal Pressure Plate Spring		12
32	41 876 DAX	Sprocket Carrier Bolt 41 876 DA, Nut,		
		41 842 D and Lock Washer, 61 913 D		16
33	41 842 D	Sprocket Carrier Bolt Nut		16
34	41 466 DAX	Sprocket Drive Pinion Shaft (Wide Tread) with Nut, 41 464 D		2
35	9 469 DAX	Steering Clutch Support Bearing Retainer, with Oil Seal,		
		41 436 D (Wide Tread)		2
	179 884	Cap Screw, 1/2 x 1-3/8" Hex Head		10
	103 323	Lock Washer, 1/2"		10
36	64 811 D	Steering Clutch Support Bearing Retainer Gasket (Wide Tread)		2
37	ST 276	Steering Clutch Support Ball Bearing (IH-PC-280)		
		(Will Work for 42 239 D)		2
37	42 239 D	Steering Clutch Support Ball Bearing (Wide Tread) (ND 7516)		
		(Wide Tread) (Optional with ST 276)		2
38	41 464 D	Steering Clutch Support Bearing Nut (Wide Tread)		2
39	10 722 D	Steering Clutch Support Bearing Nut Lock Bolt (Wide Tread)		4
	256 802 R1	Lock Wire No. 16 x 12"		2
40	9 473 DX	Sprocket Drive Carrier with 3 Pipe Plugs		2
	179 929	Cap Screw, 5/8 x 1-3/4" N.C. Hex Head		22
	103 325	Lock Washer, 5/8"		14
	104 942	Cork, 7/16 x 3/4" Dia. x 15/16" Long (XX Quality Size 6)		2
41	64 803 D	Sprocket Drive Carrier Dowel Pin (Wide Tread)		4
42	64 802 D	Cover to Carrier Dowel Pin (Wide Tread)		6
43	5 878 D	Sprocket, 29 Teeth (Not Cutaway)		2
44	41 878 D	Sprocket Drive Gear Carrier Nut Lock		2
45	41 879 DA	Sprocket Drive Gear Carrier Nut		2
46	41 893 D	Sprocket Drive Gear Outer Bearing Cage Gasket		4
47	5 876 DA	Sprocket Drive Gear Outer Bearing Cage		2
48	41 881 D	Sprocket Drive Gear Outer Bearing Retainer		2

REF. NO.	PART NUMBER	DESCRIPTION	SERIAL NUMBER	NO. REQ'D.
		TRACK DRIVE—SPROCKET DRIVE, SHAFT, PINION AND SPROCKET, TRACK FRAME PIVOT SHAFT—Continued		
49	41 894 D	Track Frame Pivot Oil Seal Dirt Deflector		2
	181 435	Cap Screw, 1/2 x 2" N.F. Hex Head		16
	103 323	Lock Washer, 1/2"		16
50	41 618 D	Track Frame Pivot Oil Seal Packing		2
51	5 834 D	Track Frame Pivot Oil Seal Pressure Plate		2
52	41 619 D	Track Frame Pivot Oil Seal Pressure Plate Spring		8
53	41 620 D	Track Frame Pivot Oil Seal Guard with Dirt Deflector		2
	179 837	Cap Screw, 3/8 x 3/4" N.C. Hex Head		16
	103 321	Lock Washer, 3/8"		16
54	41 612 D	Track Frame Pivot Oil Seal Diaphragm		2
55	41 613 D	Track Frame Pivot Oil Seal Diaphragm Retainer		2
	179 973	Cap Screw, 1/4 x 5/8" N.C. Hex Head		16
	103 319	Lock Washer, 1/4"		16
56	5 728 DB	Track Frame Pivot Bracket		2
	103 326	Lock Washer, 3/4"		10
57	54 110 D	Track Frame Pivot Oil Seal Pressure Plate Anchor Pin		4
58	40 996 DA	Track Frame Pivot Shaft (Not Wide Tread)		1
58	40 997 DA	Track Frame Pivot Shaft (Wide Tread)		1
59	256 196 R1	Track Frame Pivot Bearing Shim, Heavy		18
59	256 197 R1	Track Frame Pivot Bearing Shim, Light		12
60	5 727 DA	Track Frame Pivot Bearing		2
	181 511	Cap Screw, 3/4 x 2" N.F. Hex Head		8
	103 326	Lock Washer, 3/4"		8
61	40 990 D	Track Frame Pivot Bracket Cap Gasket		2
62	5 729 DAX	Track Frame Pivot Bracket Cap with 4 Corks		2
	179 952	Cap Screw, 3/4 x 2" N.C. Hex Head		8
	103 326	Lock Washer, 3/4"		8
63	109 461	Track Frame Pivot Lubricator		2
64	41 886 DX	Sprocket Shield with Supports		2
	179 893	Cap Screw, 1/2 x 3" N.C. Hex Head		4
	181 481	Cap Screw, 5/8 x 1-5/8" N.F. Hex Head		8
	103 030	Hex Nut, 5/8" N.F.		8
	103 323	Lock Washer, 1/2"		4
	103 325	Lock Washer, 5/8"		8
	6 666 DB	Cutaway Sprocket, 29 Teeth (Special)		2
	40 998 DA	Track Frame Pivot Shaft Set Screw		2
	218 443	Hex Jam Nut, 3/4" N.C.		2
	41 880 D	Sprocket Carrier Bolt Lock (Special)		8
	46 970 DA	Cutaway Sprocket Attachment - Special (Consists of 2 Sprockets,		
		6 666 DB, 2 Locks, 41 880 D and 2 Lock Wires, 40 980 DB)		1
		(Factory Application - Order on Machine Order Form)		
		(Field Application - Order Through Regular Service		
		Parts Channels)		
	64 809 D	Sprocket Drive Carrier Stud Nut (Wide Tread)		16
	103 325	Lock Washer, 5/8"		16
	262 652 R1	Track Frame Pivot Bracket Bolt		10
	262 653 R1	Track Frame Pivot Bracket Nut		10

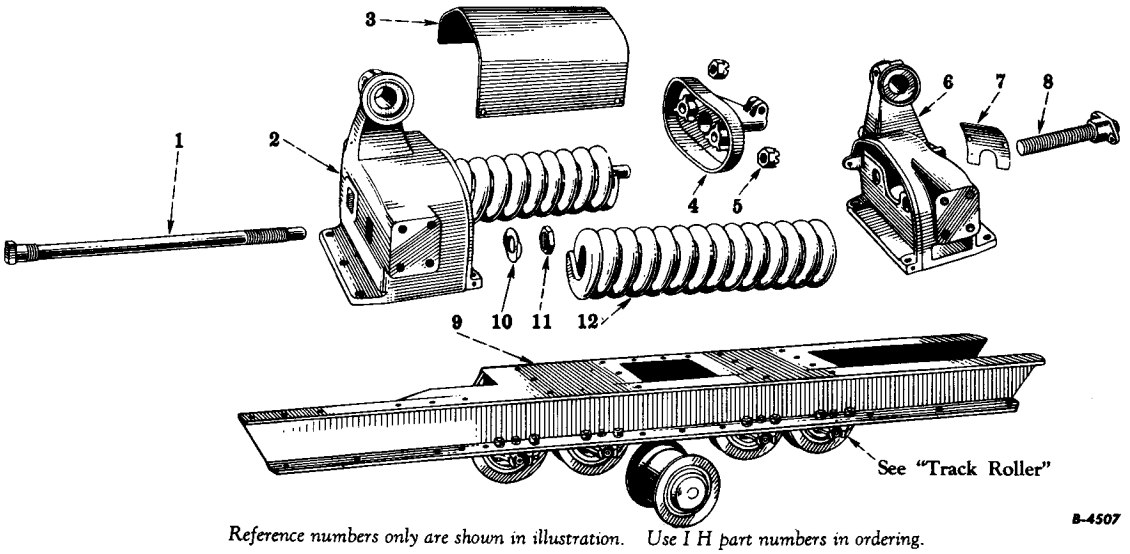

Reference numbers only are shown in illustration. Use I H part numbers in ordering.
Unnumbered parts in the illustrations are the same as corresponding parts shown with numbers.

TRACK FRAME AND SPRING

1	55 339 D	Track Spring Adjusting Rod	4
	125 438	Hex Nut, 1-1/2" N.F.	4
	103 412	Cotter Pin, 3/16 x 2-1/4"	4
2	5 863 DDX	Track Spring Retainer, Rear, L.H. with 6 Studs,	
		63 266 D and 4 Corks	1
	181 522	Cap Screw, 3/4 x 4-3/4" N.F. Hex Head	1
	181 530	Cap Screw, 7/8 x 1-3/4" N.F. Hex Head	2
	181 536	Cap Screw, 7/8 x 2-3/4" N.F. Hex Head	3
	181 540	Cap Screw, 7/8 x 3-1/4" Hex Head	1
	103 031	Hex Nut, 3/4" N.F.	1
	103 032	Hex Nut, 7/8" N.F.	4
	103 326	Lock Washer, 3/4"	1
	103 327	Lock Washer, 7/8"	6
2	5 864 DDX	Track Spring Retainer, Rear, R.H. with 6 Studs,	
		63 266 D and 4 Corks	1
	181 522	Cap Screw, 3/4 x 4-3/4" N.F. Hex Head	1
	181 530	Cap Screw, 7/8 x 1-3/4" N.F. Hex Head	2
	181 536	Cap Screw, 7/8 x 2-3/4" N.F. Hex Head	4
	181 540	Cap Screw, 7/8 x 3-1/4"	1
	103 031	Hex Nut, 3/4" N.F.	1
	103 032	Hex Nut, 7/8" N.F.	4
	103 326	Lock Washer, 3/4"	1
	103 327	Lock Washer, 7/8"	6
3	41 846 DA	Track Spring Guard (Not Rigid Track Frame)	2
	179 881	Cap Screw, 1/2 x 1" N.C. Hex Head	8
	103 323	Lock Washer, 1/2"	8
	Q 1 520	Washer, 1" O.D. x 17/32" I.D. x No. 14 Gauge	8

REF. NO.	PART NUMBER	DESCRIPTION	SERIAL NUMBER	NO. REQ'D.
		TRACK FRAME AND SPRING—Continued		
4	5 865 DA	Track Spring Retainer, Front		2
	179 957	Cap Screw, 3/4 x 3-1/4" N.F. Hex Head		2
	103 031	Hex Nut, 3/4" N.F.		2
	103 326	Lock Washer, 3/4"		2
5	125 438	Follows Reference No. 1		
6	5 866 DBX	Track Frame and Equalizer Spring Guide, L.H. with 6 Corks		
		(Not Rigid Track Frame)		1
	181 521	Cap Screw, 3/4 x 4-1/2" N.F. Hex Head		1
	181 530	Cap Screw, 7/8 x 1-3/4" N.C. Hex Head		4
	181 536	Cap Screw, 7/8 x 2-3/4" N.F. Hex Head		4
	181 540	Cap Screw, 7/8 x 3-1/4" N.F. Hex Head		1
	103 031	Hex Nut, 3/4" N.F.		1
	103 032	Hex Nut, 7/8" N.F.		4
	103 326	Lock Washer, 3/4"		1
	103 327	Lock Washer, 7/8"		8
6	5 867 DBX	Track Frame and Equalizer Spring Guide, R.H. with 6 Corks		
		(Not Rigid Track Frame)		1
	181 521	Cap Screw, 3/4 x 4-1/2" N.F. Hex Head		1
	181 530	Cap Screw, 7/8 x 1-3/4" N.C. Hex Head		4
	181 536	Cap Screw, 7/8 x 2-3/4" N.F. Hex Head		4
	181 540	Cap Screw, 7/8 x 3-3/4" N.F. Hex Head		1
	103 031	Hex Nut, 3/4" N.F.		1
	103 032	Hex Nut, 7/8" N.F.		4
	103 326	Lock Washer, 3/4"		1
	103 327	Lock Washer, 7/8"		8
7	41 845 D	Track Frame and Equalizer Spring Guide Cover Plate		2
	179 835	Cap Screw, 3/8 x 5/8" N.C. Hex Head		4
	103 321	Lock Washer, 3/8"		4
8	41 853 DB	Front Idler Adjuster		2
	181 480	Cap Screw, 5/8 x 1-1/2" N.F. Hex Head (Cadium Plated)		4
	103 325	Lock Washer, 5/8" (Cadium Plated)		4
9	52 424 DD	Track Frame, L.H.		1
9	52 425 DD	Track Frame, R.H.		1
10	54 111 D	Track Spring Adjusting Rod Lock Washer		4
11	46 887 D	Track Spring Adjusting Rod Lock Nut		4
12	41 843 DA	Track Spring		4

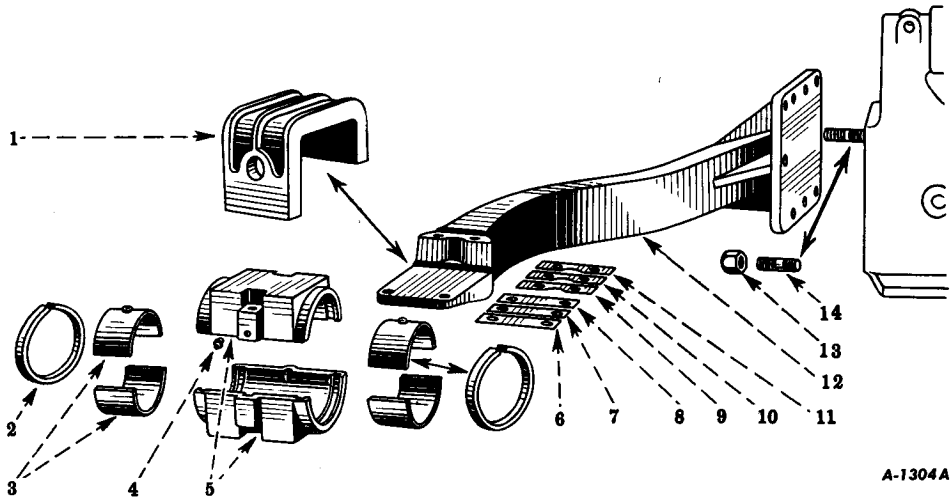

Reference numbers only are shown in illustration. Use I H part numbers in ordering.
Unnumbered Parts in the illustration are the same as corresponding parts shown with numbers.

TRACK FRAME DIAGONAL BRACE
(Not Rigid Track Frame)

1	5 897 DA	Track Frame Diagonal Brace Clamp	2
	179 953	Cap Screw, 3/4 x 2-1/4" N.C. Hex Head	4
	220 081	Hex Nut, 3/4"	4
	103 326	Lock Washer, 3/4"	8
2	42 134 D	Track Frame Diagonal Brace Bearing Felt	4
3	57 241 D	Track Frame Diagonal Brace Bearing Bushing Set	
		(Consists of 4 Bushings, 57 200 D)	2
4	109 461	Track Frame Diagonal Brace Bearing Lubricator	
		(Lincoln No. 5000) (Optional with 119 512)	2
4	119 512	Track Frame Diagonal Brace Bearing Lubricator	
		(Alemite No. 1610) (Optional with 109 461)	2
5	57 237 DA	Track Frame Diagonal Brace Bearing Set, Upper and	
		Lower, Complete	2
		(Composed of:	
		1 Bearing §8 754 D	
		1 Bearing §8 755 DA	
		2 Washer 18 868 D	
		2 Felt 42 134 D	
		1 Bushing Set 57 241 D	
		2 Nut 103 028	
		2 Screw 181 446)	
	181 466	Cap Screw, 1/2 x 4" N.F. Hex Head	4
	103 028	Hex Nut, 1/2" N.F.	4
6	42 130 D	Track Frame Diagonal Brace Clamp Shim,	
		Outer (Extra Heavy)	2
7	42 131 D	Track Frame Diagonal Brace Clamp Shim, Outer (Heavy)	2

§ - Not Supplied Separately.

REF. NO.	PART NUMBER	DESCRIPTION	SERIAL NUMBER	NO. REQ'D.
		TRACK FRAME DIAGONAL BRACE—Continued (Not Rigid Track Frame)		
8	42 132 D	Track Frame Diagonal Brace Clamp Shim, Outer (Medium)		4
9	42 127 D	Track Frame Diagonal Brace Clamp Shim, Inner (Extra Heavy)		2
10	42 128 D	Track Frame Diagonal Brace Clamp Shim, Inner (Heavy)		2
11	42 129 D	Track Frame Diagonal Brace Clamp Shim, Inner (Medium)		4
12	42 003 DA	Track Frame Diagonal Brace, L.H. (Not Wide Tread)		1
12	42 004 DA	Track Frame Diagonal Brace, R.H. (Not Wide Tread)		1
12	42 005 DA	Track Frame Diagonal Brace, L.H. (Wide Tread)		1
12	42 006 DA	Track Frame Diagonal Brace, R.H. (Wide Tread)		1
13	41 842 D	Track Frame Diagonal Brace Stud Nut, 7/8"		12
14	63 266 D	Track Frame Diagonal Brace Flange Stud		12
	57 200 D	Track Frame Diagonal Brace Bearing Bushing		8
	18 868 D	Track Frame Diagonal Brace Lock Washer		4

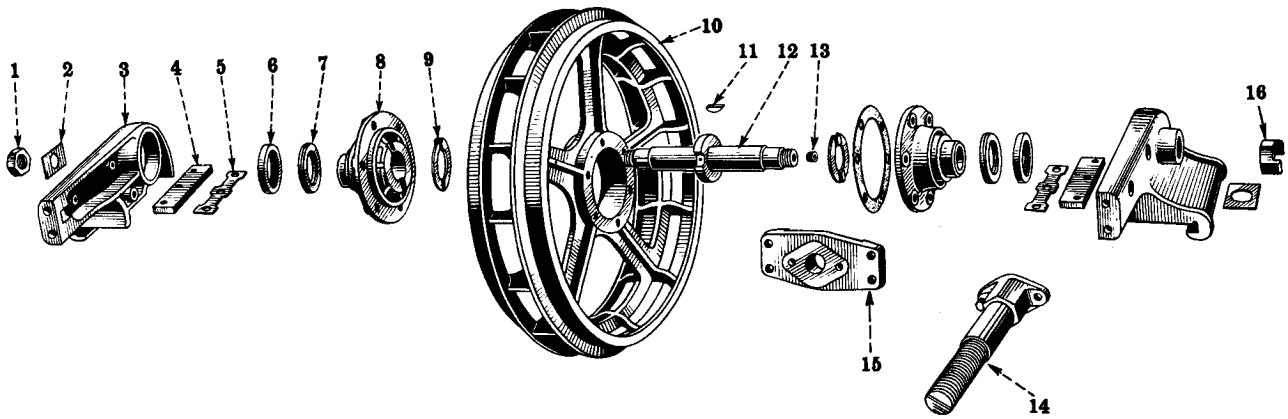

A-10329B

Reference numbers only are shown in illustration. Use I H part numbers in ordering.
Unnumbered parts in the illustrations are the same as corresponding parts shown with numbers.

FRONT IDLER

1	128 127	Follows Reference No. 12		
2	41 866 D	Front Idler Shaft Nut Lock		4
3	5 869 DBX	Front Idler Guide, Inner, R.H. and Outer, L.H. with		
		Oil Seal, 41862 DA and 3 Corks		2
3	5 870 DBX	Front Idler Guide, Inner, L.H. and Outer, R.H. with		
		Oil Seal, 41 862 DA and 3 Corks		2
3	5 871 DB	Front Idler Guide, Outer, L.H. (Order 5 869 DBX)		1
3	5 872 DB	Front Idler Guide, Outer, R.H. (Order 5 870 DBX)		1
4	41 861 D	Front Idler Guide Retainer		4
	179 929	Cap Screw, 5/8 x 1-3/4" N.C. Hex Head		12
5	49 104 D	Front Idler Guide Retainer Bolt Lock		4
6	41 862 DA	Front Idler Oil Seal		4
7	41 867 DA	Front Idler Felt Washer		4
8	5 875 DBX	Front Idler Carrier with Bushings		4
9	41 404 DAX	Front Idler Thrust Washer (Set of 2)		2
10	5 874 D	Front Idler (Not Large Diameter Front Idler)		2
11	117 986	Front Idler Shaft Key (Woodruff "G")		2
12	41 868 D	Front Idler Shaft	TDR 22001 to 23865	2
	128 127	Hex Jam Nut, 1-1/2" N.F.		2
12	261 282 R11	Front Idler Shaft with Plug, 116 566	TDR 23866 Up	2

CHASSIS

REF. NO.	PART NUMBER	DESCRIPTION	SERIAL NUMBER	NO. REQ'D.
		FRONT IDLER—Continued		
13	17 829 DA	Front Idler Lubricator (Optional with 37 290 D)	TDR 22001 to 23865	2
13	37 290 D	Front Idler Lubricator (Optional with 17 829 DA)	TDR 22001 to 23865	2
13	116 566	Front Idler Shaft Plug (Will Work for 112 715)	TDR 23866 Up	2
14	41 853 DB	Front Idler Adjuster (Not Large Diameter Front Idler)		2
	181 480	Cap Screw, 5/8 x 1-1/2" N.C. Hex Head		4
	103 325	Lock Washer, 5/8"		4
15	5 873 D	Front Idler Guide Cross Plate		2
	179 954	Cap Screw, 3/4 x 2-1/2" N.C. Hex Head		8
	103 326	Lock Washer, 3/4"		8
16	128 127	Front Idler Shaft Nut, Outer		2
	15 944 D	Front Idler Carrier Bolt Nut		12
	115 553	Front Idler Carrier Bolt Lock Washer (Shakeproof 1228)		12
	41 864 D	Front Idler Carrier Bushing (Order 42 971 DX)		8
	42 971 DX	Front Idler Carrier Bushing (Set of 2)		4
	57 734 D	Front Idler Carrier Bolt		12
	62 490 D	Large Diameter Front Idler Attachment (Special)		
		Factory Application Only		1

MEMORANDA

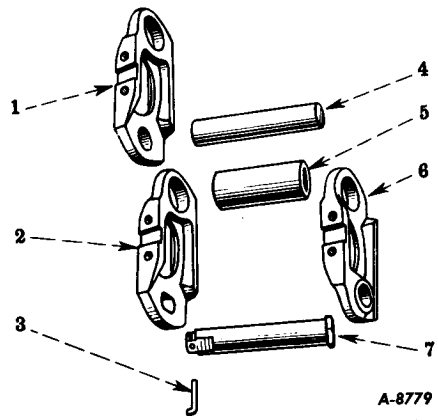

Reference numbers only are shown in illustration. Use I H part numbers in ordering.

TRACK CHAIN

1	40 977 DC	Track Link, R.H.	68
2	40 978 DC	Track Master Link	6
3	40 980 DB	Track Master Link Pin Lockwire	6
4	40 982 DA	Track Link Pin (1.621/1.625 Diameter x 8-11/16" Long)	68
5	40 981 D	Track Link Bushing (1.630/1.642 I.D. x 2.362/2.366 O.D. x 5-31/32")	74
6	40 976 DC	Track Link, L.H.	74
7	40 979 DA	Track Master Link Pin (1.6095/1.6110 Diameter x 9" Long)	6
	65 118 DA	Track (Less Shoes) (Extended Track Frame-Special) (3 Sections -	
		2 Sections of 13 Links, 1 Section of 12 Links) (For details See	
		Extended Track Frame Attachment)	2
	65 100 DA	Track Chain, Complete (3 Sections - 2 Sections of 12 Links,	
		1 Section of 13 Links)	2
		(Composed of:	
		37 Link 40 976 DC	
		34 Link 40 977 DC	
		3 Link 40 978 DC	
		3 Pin 40 979 DA	
		3 Lock Wire 40 980 DB	
		37 Bushing 40 981 D	
		34 Pin 40 982 DA)	
	65 124 DA	Track Chain, Complete (Heavy Front Idler) (Special)	
		(3 Sections - 2 Sections of 13 Links, 1 Section of 12 Links)	
		(For details See Heavy Front Idler Attachment)	2

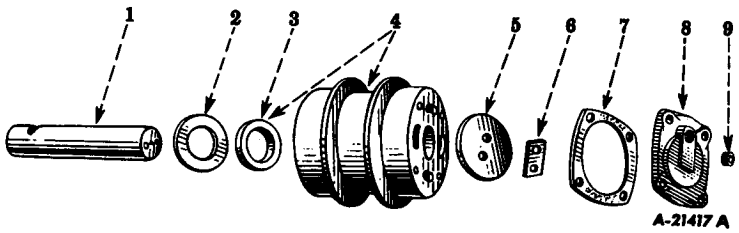

Reference numbers only are shown in illustration. Use I H part numbers in ordering.
Unnumbered parts in the illustrations are the same as corresponding parts shown with numbers.

TRACK IDLER

1	40 987 D	Track Idler Shaft		4
2	40 993 D	Track Idler Felt Washer		4
3	40 992 D	Track Idler Oil Seal		4
3	60 250 D	Track Idler Oil Seal		4
4	5 725 DBX	Track Idler with Oil Seal, 60 250 D		4
5	40 988 D	Track Idler Thrust Washer		4
	181 429	Cap Screw, 1/2 x 1-1/4" N.F. Hex Head		8
6	40 991 DA	Track Idler Thrust Washer Cap Screw Lock		4
7	42 101 D	Track Idler Cap Gasket		4
8	5 726 D	Track Idler Cap	TDR 22001 to 23865	4
	179 886	Cap Screw, 1/2 x 1-5/8" N.C. Hex Head		16
	103 323	Lock Washer, 1/2"		16
8	261 281 R11	Track Idler Cap with Plug, 116 566	TDR 23866 Up	4
9	17 829 DA	Track Idler Lubricator (Optional with 37 290 D)	TDR 22001 to 23865	4
9	37 290 D	Track Idler Lubricator (Optional with 17 829 DA)	TDR 22001 to 23865	4
9	116 566	Track Idler Cap Plug (Will Work for 112 715)	TDR 23866 Up	4

REF. NO.	PART NUMBER	DESCRIPTION	SERIAL NUMBER	NO. REQ'D
		TRACK IDLER—Continued		
	67 156 D	Track Idler Shaft and Cap, Complete	TDR 22001 to 23865	4
		(Composed of:		
		1 Idler 5 725 DBX		
		1 Cap 5 726 D		
		1 Lubricator 17 829 DA		
		1 Shaft 40 987 D		
		1 Washer 40 988 D		
		1 Lock 40 991 DA		
		1 Washer 40 993 D		
		1 Gasket 42 101 D		
		4 Screw 179 886		
		2 Screw 181 429		
		4 Washer 103 321)		
	261 521 R91	Track Idler Shaft and Cap, Complete	TDR 23866 Up	4
		(Composed of:		
		1 Idler 5 725 DBX		
		1 Shaft 40 987 D		
		1 Washer 40 988 D		
		1 Lock 40 991 DA		
		1 Washer 40 993 D		
		1 Gasket 42 101 D		
		1 Cap 261 281 R11		
		4 Screw 179 886		
		2 Screw 181 429		
		4 Washer 103 323)		

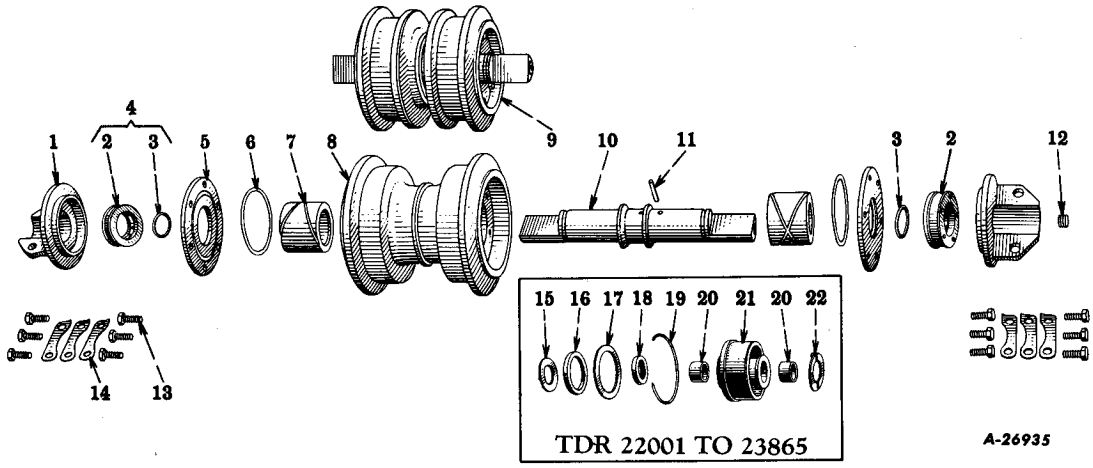

Reference numbers only are shown in illustration. Use I H part numbers in ordering.
Unnumbered parts in the illustrations are the same as corresponding parts shown with numbers.

TRACK ROLLERS

1	5 735 D	Track Roller Shaft Bracket (Inner)	TDR 22001 to 23865	10
1	8 367 D	Track Roller Shaft Bracket (Outer)	TDR 22001 to 23865	10
1	260 990 R1	Track Roller Shaft Bracket (Inner and Outer)	TDR 23866 Up	20
	37 293 D	Track Roller Shaft Bracket Mounting Bolt		40
	103 030	Hex Nut, 5/8"		40
	103 325	Lock Washer, 5/8"		40
2	251 975 R91	Track Roller Oil Seal (Order 257 330 R91)	TDR 23866 Up	20
3	251 976 R1	Track Roller Oil Seal Sealing Ring	TDR 23866 Up	20
4	257 330 R91	Track Roller Oil Seal, 251 975 R91 with		
		Ring, 251 976 R1	TDR 23866 Up	20
5	261 503 R1	Track Roller Bushing Retainer	TDR 23866 Up	20
6	261 506 R1	Track Roller Sealing Ring	TDR 23866 Up	20
7	257 676 R2	Track Roller Bushing	TDR 23866 Up	20
8	41 402 DA	Track Roller (Single Flange) (No's 1, 3 and 5)		
		(Order 261 127 R91)	TDR 22001 to 23865	6
8	260 993 R11	Track Roller (Single Flange) (No's 1, 3 and 5)	TDR 23866 Up	6
9	41 400 DA	Track Roller (Double Flange) (No's 2 and 4)		
		(Order 261 128 R91)	TDR 22001 to 23865	4
9	260 995 R11	Track Roller (Double Flange) (No's 2 and 4)	TDR 23866 Up	4

REF. NO.	PART NUMBER	DESCRIPTION	SERIAL NUMBER	NO. REQ'D
		TRACK ROLLERS—Continued		
10	52 422 D	Track Roller Shaft (For Single Flange)	TDR 22001 to 23865	6
10	52 422 D	Track Roller Shaft (For Double Flange)	TDR 22001 to 23865	4
10	260 991 R91	Track Roller Shaft, Complete	TDR 23866 Up	10
		(Composed of:		
		2 Bushing 257 676 R2		
		1 Shaft §260 989 R1		
		1 Stand Pipe 261 007 R1		
		1 Plug 116 566)		
11	261 007 R1	Track Roller Shaft Stand Pipe	TDR 23866 Up	10
12	116 566	Pipe Plug, 1/2" Countersunk Headless		
		(Will Work for 112 715)	TDR 23866 Up	10
13	261 649 R1	Track Roller Bushing Retainer Cap Screw	TDR 23866 Up	120
14	261 622 R1	Track Roller Bushing Retainer Cap Screw		
		Lock Plate	TDR 23866 Up	60
15	40 993 D	Track Roller Felt Washer (Outer)	TDR 22001 to 23865	20
16	41 408 D	Track Roller Felt Washer (Center)	TDR 22001 to 23865	20
17	41 405 DA	Track Roller Sealing Washer (Inner)	TDR 22001 to 23865	20
18	256 726 R91	Track Roller Oil Seal	TDR 22001 to 23865	20
19	41 406 D	Track Roller Carrier Snap Ring	TDR 22001 to 23865	20
20	42 972 DX	Track Roller Carrier Bushing (Set of 4)		
		(Will Work for 41 403 D)	TDR 22001 to 23865	10
21	5 734 DY	Track Roller Carrier Set, Complete (Single Flange -		
		Order 261 127 R91) (Double Flange - Order		
		261 128 R91)	TDR 22001 to 23865	10
		(Composed of:		
		2 Carrier 5 734 DX		
		2 Washer 40 993 D		
		2 Washer 41 404 DA		
		2 Washer 41 405 DA		
		2 Snap Ring 41 406 D		
		2 Washer 41 408 D		
		2 Seal 256 726 R91)		
22	41 404 DAX	Track Roller Carrier Thrust Washer (Set of Two)		
		(Will Work for 66 854 DX)	TDR 22001 to 23865	10
	5 733 D	Track Roller Oil Scupper (Optional with 250 007 R91)	TDR 22001 to 23865	10
	17 829 DA	Track Roller Lubricator (Optional with 37 290 D)	TDR 22001 to 23865	10
	37 290 D	Track Roller Lubricator (Optional with 17 289 DA)	TDR 22001 to 23865	10
	56 133 D	Track Roller, Complete (Single Flange)		
		(No's 1, 3 and 5) (Order 261 127 R91)	TDR 22001 to 23865	6
		(Composed of:		
		1 Scupper 5 733 D		
		1 Carrier Set 5 734 DY		
		1 Lubricator 17 829 DA)		
		1 Roller 41 402 DA		
		1 Shaft 52 422 D)		

§ - Not Supplied Separately.

REF. NO.	PART NUMBER	DESCRIPTION	SERIAL NUMBER	NO. REQ'D
		TRACK ROLLERS—Continued		
	56 134 D	Track Roller, Complete (Double Flange)		
		(No.'s 2 and 4) (Order 261 128 R91)	TDR 22001 to 23865	4
		(Composed of:		
		1 Scupper 5 733 D		
		1 Carrier Set 5 734 DY		
		1 Lubricator 17 829 DA		
		1 Roller 41 400 DA		
		1 Shaft 52 422 D)		
	250 007 R91	Track Roller Oil Scupper		
		(Optional with 5 733 D)	TDR 22001 to 23865	10
	260 988 R1	Track Roller Lubricating Nozzle (Furnished with		
		261 127 R91 and 261 128 R91 to be used with		
		187 396 Lubricating Nozzle Coupling on 60 012 D		
		Bucket Lubricator)	TDR 22001 to 23865	1
	261 125 R92	Track Roller and Shaft, Complete (Single Flange)		
		(No's 1, 3 and 5)	TDR 23866 Up	6
		(Composed of:		
		1 Shaft 260 991 R91		
		1 Roller 260 993 R11		
		2 Retainer 261 503 R1		
		2 Ring 261 506 R1		
		6 Plate 261 622 R1		
		12 Screw 261 649 R1)		
	261 126 R92	Track Roller and Shaft, Complete (Double Flange)		
		(No's 2 and 4)	TDR 23866 Up	4
		(Composed of:		
		1 Shaft 260 991 R91		
		1 Roller 260 995 R11		
		2 Retainer 261 503 R1		
		2 Ring 261 506 R1		
		6 Plate 261 622 R1		
		12 Screw 261 649 R1)		
	261 127 R91	Track Roller and Shaft Service Package (Single Flange)		
		(No.'s 1, 3 and 5)		
		(Will Work for 5 734 DY, 4 102 DA, and 56 133 D)	TDR 22001 to 23865	6
		(Consists of:		
		2 Ring 251 976 R1		
		2 Oil Seal 257 330 R91		
		1 Nozzle 260 988 R1		
		2 Bracket 260 990 R1		
		1 Track Roller and Shaft 261 125 R92		
		1 Coupling 187 396)		

REF. NO.	PART NUMBER	DESCRIPTION	SERIAL NUMBER	NO. REQ'D
		TRACK ROLLERS—Continued		
	261 128 R91	Track Roller and Shaft Service Package (Double Flange)		
		(No.'s 2 and 4)		
		(Will Work for 5 734 DY, 41 400 DA, and 56 134 D)	TDR 22001 to 23865)	4
		(Consists of:		
		2 Ring 251 976 R1		
		2 Oil Seal 257 330 R91		
		1 Nozzle 260 988 R1		
		2 Bracket 260 990 R1		
		1 Track Roller and		
		Shaft 261 126 R92		
		1 Coupling 187 396)		
	187 396	Track Roller Lubricating Nozzle Coupling (Furnished		
		with 261 127 R91 and 261 128 R91 to be used		
		with 260 988 R1 Lubricating Nozzle on 60 012 D		
		Bucket Lubricator)	TDR 22001 to 23865	1

TRACK SHOES

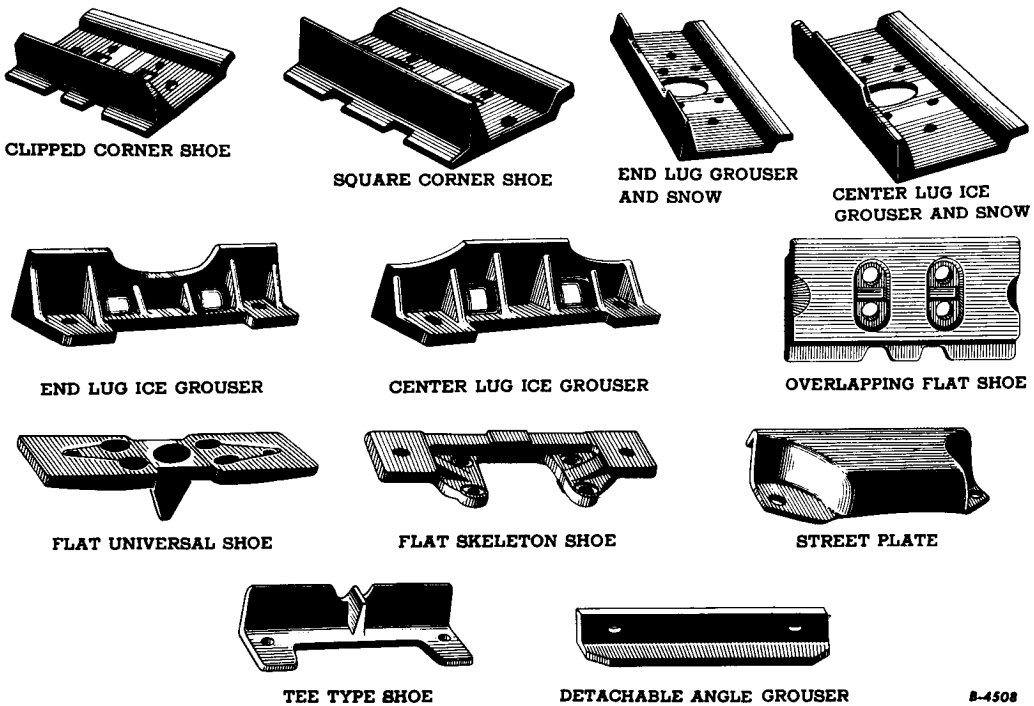
CLIPPED CORNER SHOE
SQUARE CORNER SHOE
END LUG GROUSER AND SNOW
CENTER LUG ICE GROUSER AND SNOW
END LUG ICE GROUSER
CENTER LUG ICE GROUSER
OVERLAPPING FLAT SHOE
FLAT UNIVERSAL SHOE
FLAT SKELETON SHOE
STREET PLATE
TEE TYPE SHOE
DETACHABLE ANGLE GROUSER
B-4508

ATTACHMENT NUMBER #	NAME OR DESCRIPTION	SIZE	TRACK SHOE	NO. USED
	SQUARE CORNER			
46 079 DA	Set of Track Shoes	14"	46 042 DA	74
46 080 DA	Set of Track Shoes	16"	46 043 DA	74
46 081 DA	Set of Track Shoes	18"	40 985 DA	74
46 082 DA	Set of Track Shoes	19"	46 044 DA	74
46 083 DA	Set of Track Shoes (Regular)	20"	46 045 DA	74
46 084 DA	Set of Track Shoes (Wide Tread)	22"	46 046 DA	74
46 085 DA	Set of Track Shoes (Wide Tread)	24"	46 047 DA	74
%256 294 R91	Set of Track Shoes	18"	40 985 DA	80
%256 295 R91	Set of Track Shoes	20"	46 045 DA	80
%256 296 R91	Set of Track Shoes (Wide Tread)	22"	46 046 DA	80
%256 297 R91	Set of Track Shoes (Wide Tread)	24"	46 047 DA	80
†256 304 R91	Set of Track Shoes	18"	40 985 DA	76
†256 305 R91	Set of Track Shoes	20"	46 045 DA	76
†256 306 R91	Set of Track Shoes (Wide Tread)	22"	46 046 DA	76
†256 307 R91	Set of Track Shoes (Wide Tread)	24"	46 047 DA	76
	Included with Above			
†40 986 DB	Track Shoe Cap Screw			304
40 986 DB	Track Shoe Cap Screw			296
%40 986 DB	Track Shoe Cap Screw			320
260 714 R1	Track Shoe Cap Screw Nut			296
†260 714 R1	Track Shoe Cap Screw Nut			304
%260 714 R1	Track Shoe Cap Screw Nut			320
	CLIPPED CORNER			
46 089 DA	Set of Track Shoes	14"	46 069 DA	74
46 090 DA	Set of Track Shoes	16"	46 070 DA	74
46 091 DA	Set of Track Shoes	18"	46 071 DA	74
46 092 DA	Set of Track Shoes	19"	46 072 DA	74
46 093 DA	Set of Track Shoes	20"	46 073 DA	74
46 094 DA	Set of Track Shoes (Wide Tread)	22"	46 074 DA	74
46 095 DA	Set of Track Shoes (Wide Tread)	24"	46 075 DA	74
	Included with Above			
40 986 DB	Track Shoe Cap Screw			296
260 714 R1	Track Shoe Cap Screw Nut			296
†257 751 R91	Set of Track Shoes	18"	46 071 DA	76
†257 752 R91	Set of Track Shoes	20"	46 073 DA	76
†257 753 R91	Set of Track Shoes	22"	46 074 DA	76
†257 754 R91	Set of Track Shoes	24"	46 075 DA	76
△257 755 R91	Set of Track Shoes	18"	46 071 DA	80
△257 756 R91	Set of Track Shoes	20"	46 073 DA	80
△257 757 R91	Set of Track Shoes	22"	46 074 DA	80
△257 758 R91	Set of Track Shoes	24"	46 075 DA	80
	Included with Above			
40 986 DB	Track Shoe Cap Screw			320
260 714 R1	Track Shoe Cap Screw Nut			320
	FLAT SHOES			
48 491 D	Set of Skeleton Track Shoes	15"	6 511 D	74
48 467 D	Set of Universal Track Shoes	18"	6 670 D	74
48 468 D	Set of Universal Track Shoes	20"	6 671 D	74
255 902 R91	Set of Overlapping Track Shoes	18"	9 163 DA	74
%256 298 R91	Set of Overlapping Track Shoes	18"	9 163 DA	80
	Included with Above			
40 986 DB	Track Shoe Cap Screw			296
260 714 R1	Track Shoe Cap Screw Nut			296
	ANGLE GROUSER			
%256 299 R91	Set of Angle Track Shoes (Detachable Type)	18"	61 199 D	80
	Included with Above			
	Cap Screw, 3/4 x 2-1/4" N.F. Hex Head			160
	Hex Nut, 3/4" N.F.			160
	Lock Washer, 3/4"			160

ATTACHMENT NUMBER #	NAME OR DESCRIPTION	SIZE	TRACK SHOE	NO. USED
	ICE GROUSER			
49 398 D	Set of Staggered Lug Track Shoes (End Lug)	16"	6 824 D	37
	(Detachable Type) (Center Lug)	16"	6 825 D	37
	(Used with Square Corner, Clipped Corner, and Flat Shoes)			
67 250 D	Set of Tee Type Track Shoes	14-1/2"	67 249 D	74
	(Used with Square Corner and Clipped Corner)			
	Included with Above			
	Cap Screw, 3/4 x 2-1/8" N.F. Hex Head			148
	Hex Nut, 3/4" N.F.			148
	Lock Washer, 3/4"			148
	STAGGERED LUG ICE GROUSER AND SNOW			
47 210 DA	Set of Track Shoes (Center Lug)	16"	47 213 DA	37
	(End Lug)	16"	47 214 DA	37
47 211 DA	Set of Track Shoes (Center Lug)	18"	47 215 DA	37
	(End Lug)	18"	47 216 DA	37
47 212 DA	Set of Track Shoes (Center Lug)	20"	47 217 DA	37
	(End Lug)	20"	47 218 DA	37
49 326 DA	Set of Track Shoes (Wide Tread) (Center Lug) (End Lug)	22"	49 327 DA	37
		22"	49 328 DA	37
255 882 R91	Set of Track Shoes (Center Lug)	18"	47 215 DA	40
	(End Lug)	18"	47 216 DA	40
255 883 R91	Set of Track Shoes (Center Lug)	20"	47 217 DA	40
	(End Lug)	20"	47 218 DA	40
	Included with Above			
†259 588 R91	Set of Track Shoes (Center Lug)	18"	47 215 DA	38
	(End Lug)	18"	47 216 DA	38
†259 589 R91	Set of Track Shoes (Center Lug)	20"	47 217 DA	38
	(End Lug)	20"	47 218 DA	38
40 986 DB	Track Shoe Cap Screw			296
260 714 R1	Track Shoe Cap Screw Nut			296
40 986 DB	Track Shoe Cap Screw			320
260 714 R1	Track Shoe Cap Screw, Nut			320
40 986 DB	Track Shoe Cap Screw			304
260 714 R1	Track Shoe Nut			304
	STREET PLATES			
	(Used with Square Corner, Clipped Corner, and Staggered Lug Ice Grouser and Snow)			
#46 685 D	Set of Street Plates	14"	46 686 DA	38
	Cap Screw, 3/4 x 1-3/4" N.F. Hex Head			76
	Hex Nut, 3/4" N.F.			76
	Lock Washer, 3/4"			76
#49 438 D	Set of Street Plates	14"	46 686 DA	74
	Cap Screw, 3/4 x 1-3/4" N.F. Hex Head			148
	Hex Nut, 3/4" N.F.			148
	Lock Washer, 3/4"			148
%256 300 R91	Set of Street Plates	14"	46 686 DA	80
	Cap Screw, 3/4 x 1-3/4" N.F. Hex Head			160
	Hex Nut, 3/4" N.F.			160
	Lock Washer, 3/4"			160
%256 301 R91	Set of Street Plates	14"	46 686 DA	40
	Cap Screw, 3/4 x 1-3/4" N.F. Hex Head			80
	Hex Nut, 3/4" N.F.			80
	Lock Washer, 3/4"			80

% - For Use with Extended Track Frame and Large Front Idler Attachment.
† - For Use with Large Diameter Front Idler Attachment Only.
△ - For Use with Extended Track Frame Attachment.

- (Factory Application - Order on Machine Order Form).
(Field Application - Order Through Regular Service Parts Channels).

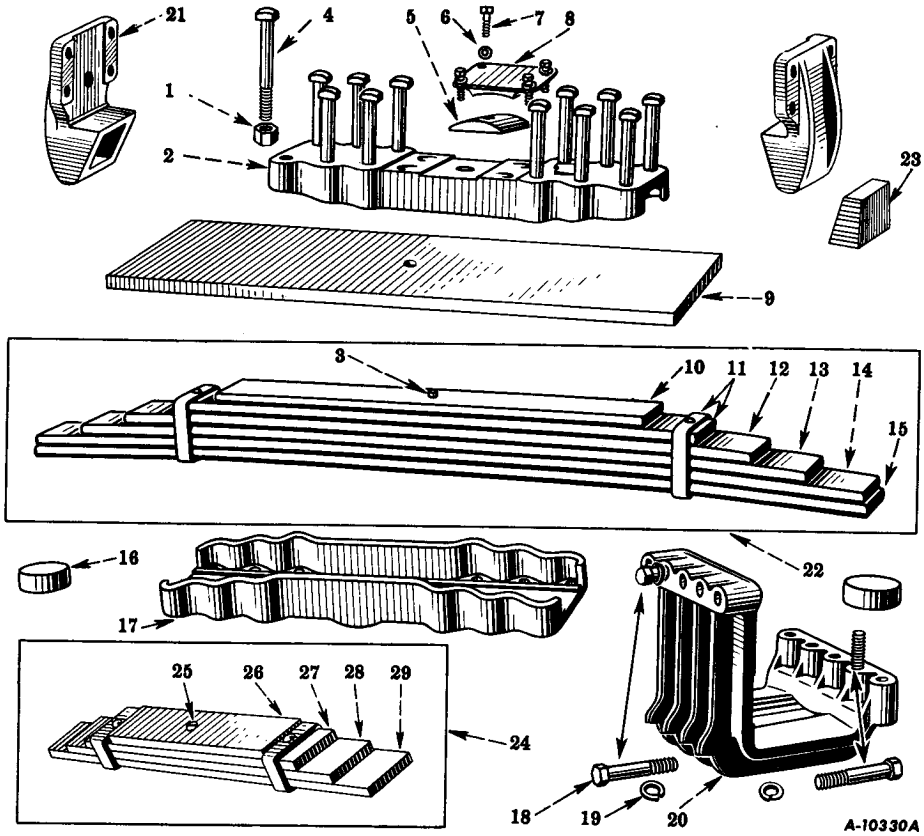

Reference numbers only are shown in illustration. Use I H part numbers in ordering.
Unnumbered parts in the illustrations are the same as corresponding parts shown with numbers.

EQUALIZER SPRING
(Not Rigid Track Frame)

1	41 442 DA	Equalizer Spring Saddle Bolt Nut (Not Wide Tread)	12
		(Wide Tread)	16
2	8 903 DX	Equalizer Spring Saddle, Upper with Pad,	
		41 440 D and 2 Rivets, 104 203	
		(Wide Tread)	1
2	9 176 DX	Equalizer Spring Saddle, Upper with Pad,	
		41 440 D and 2 Rivets, (Not Wide Tread)	1
3	41 458 DX	Equalizer Spring Leaf Center Bolt, 1/2 x 6" N.F. with Nut	
		(Not Wide Tread)	1
4	41 441 DA	Equalizer Spring Saddle Bolt (Not Wide Tread)	12
		(Wide Tread)	16
5	41 440 D	Equalizer Spring Saddle Wearing Pad	1
	104 203	Rivet, 3/8 x 1-3/4" Countersunk Head	2
6	103 325	Follows Reference No. 7	

REF. NO.	PART NUMBER	DESCRIPTION	SERIAL NUMBER	NO. REQ'D.
		EQUALIZER SPRING—Continued (Not Rigid Track Frame)		
7	41 444 D	Equalizer Spring Frame Pad, Upper Dowel Bolt		4
6	103 325	Lock Washer, 5/8"		4
8	41 443 D	Equalizer Spring Frame Pad, Upper		1
9	58 949 D	Equalizer Spring Spacer (Wide Tread)		1
10	41 451 D	Equalizer Spring Leaf No. 6 (Not Wide Tread)		1
11	41 450 D	Equalizer Spring Leaf No. 5 with Clip (Not Wide Tread)		1
12	41 449 D	Equalizer Spring Leaf No. 4 (Not Wide Tread)		1
13	41 448 D	Equalizer Spring Leaf No. 3 (Not Wide Tread)		1
14	41 447 D	Equalizer Spring Leaf No. 2 (Not Wide Tread)		1
15	41 446 D	Equalizer Spring Leaf No. 1 (Not Wide Tread)		1
16	5 777 DA	Equalizer Spring Guide Pad		2
17	5 774 DA	Equalizer Spring Saddle, Lower (Not Wide Tread)		1
17	8 904 D	Equalizer Spring Saddle, Lower (Wide Tread)		1
18	41 445 D	Equalizer Spring Frame Pad Lower Dowel Bolt		4
19	103 327	Lockwasher, 7/8"		4
20	5 776 DA	Equalizer Spring Frame Pad, Lower		1
	179 981	Cap Screw, 7/8 x 4" N.C. Hex Head		3
	179 982	Cap Screw, 7/8 x 4-1/4" N.C. Hex Head		3
	103 327	Lock Washer, 7/8"		6
21	8 941 DX	Equalizer Spring Bumper Pad Bracket, L.H. (Wide Tread)		
		with Pad 58 955 DA		1
	179 977	Cap Screw, 7/8 x 3" N.C. Hex Head		4
	103 327	Lock Washer, 7/8"		4
21	8 942 DX	Equalizer Spring Bumper Pad Bracket, R.H. (Wide Tread)		
		with Pad 58 955 DA		1
	179 977	Cap Screw, 7/8 x 3" N.C. Hex Head		4
	103 327	Lock Washer, 7/8"		4
21	9 166 DX	Equalizer Spring Bumper Pad Bracket, L.H. (Not Wide Tread)		
		with Pad, 58 955 DA		1
	179 977	Cap Screw, 7/8 x 3" N.C. Hex Head		4
	103 327	Lock Washer, 7/8"		4
21	9 167 DX	Equalizer Spring Bumper Pad Bracket, R.H. (Not Wide Tread)		
		with Pad, 58 955 DA		1
	179 977	Cap Screw, 7/8 x 3" N.C. Hex Head		4
	103 327	Lock Washer, 7/8"		4
22	41 438 D	Equalizer Spring, (6 Leaves) (Not Wide Tread) Complete		1
		(Composed of:		
		1 Leaf 41 446 D 1 Leaf 41 450 D		
		1 Leaf 41 447 D 1 Leaf 41 451 D		
		1 Leaf 41 448 D 1 Bolt 41 458 DX)		
		1 Leaf 41 449 D		

REF. NO.	PART NUMBER	DESCRIPTION	SERIAL NUMBER	NO. REQ'D
		EQUALIZER SPRING—Continued (Not Rigid Track Frame)		
23	58 955 DA	Equalizer Spring Bumper Pad		2
24	58 950 D	Equalizer Spring, (4 Leaves) (Wide Thread) Complete		1
		(Composed of:		
		1 Bolt §41 458 D		
		1 Leaf 58 951 D		
		1 Leaf 58 952 D		
		1 Leaf 58 953 D		
		1 Leaf 58 954 D		
		1 Nut 103 028)		
25	41 458 D	Equalizer Spring Center Bolt (Order 58 950 D)		1
	103 028	Hex Nut, 1/2" N.F.		1
26	58 954 D	Equalizer Spring Leaf No. 4		1
27	58 953 D	Equalizer Spring Leaf No. 3		1
28	58 952 D	Equalizer Spring Leaf No. 2		1
29	58 951 D	Equalizer Spring Leaf No. 1		1

§ - Not Supplied Separately.

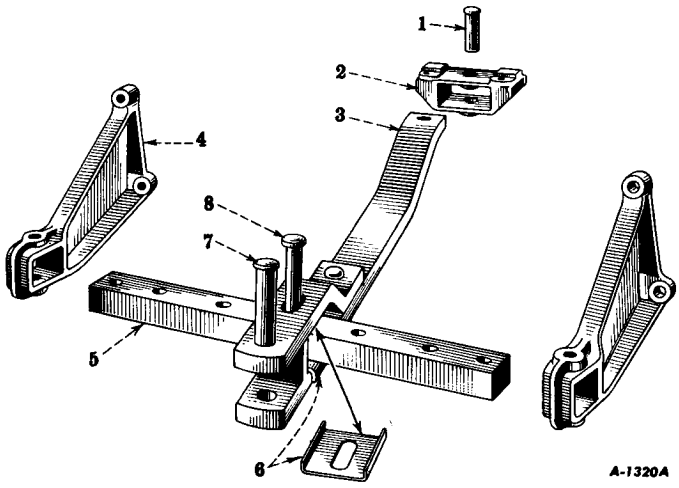

Reference numbers only are shown in illustration. Use I H part numbers in ordering.
Unnumbered parts in the illustrations are the same as corresponding parts shown with numbers.

DRAWBAR

1	41 589 D	Drawbar Pivot Pin	1
2	5 831 DA	Drawbar Pivot Bracket	1
	179 998	Cap Screw, 1 x 3" N.C. Hex Head	4
	121 326	Lock Washer, 1"	4
3	41 595 DA	Drawbar, Complete	1
		(Composed of:	
		1 Upper Jaw §41 587 DA	
		1 Jaw Spacer §41 588 D	
		1 Drawbar §41 590 DA	
		2 Anchor 50 093 D	
		2 Steel Rivet 426 152)	
	426 152	Steel Rivet, 1-1/4 x 5-1/2" Round Head	2
4	5 830 DB	Drawbar Guide Bracket	2
	109 864	Hex Nut, 1"	6
	121 326	Lock Washer, 1"	6
5	41 591 DA	Drawbar Guide	1
	12 459 R1	Cap Screw, 1-1/4 x 7" N.F. Hex Head	2
	109 866	Hex Nut, 1-1/4" N.F.	2
	131 035	Lock Washer, 1-1/4"	2
6	41 592 D	Drawbar Clevis Wear Plate	2
7	41 593 D	Drawbar Clevis Pin	1
	12 465 R1	Cotter Pin, 1/2 x 3"	1
8	41 594 D	Drawbar Stop Pin	1
	103 423	Cotter Pin, 1/4 x 2-1/4"	1
	50 093 D	Drawbar Wear Plate Anchor	2

§ - Not Supplied Separately.

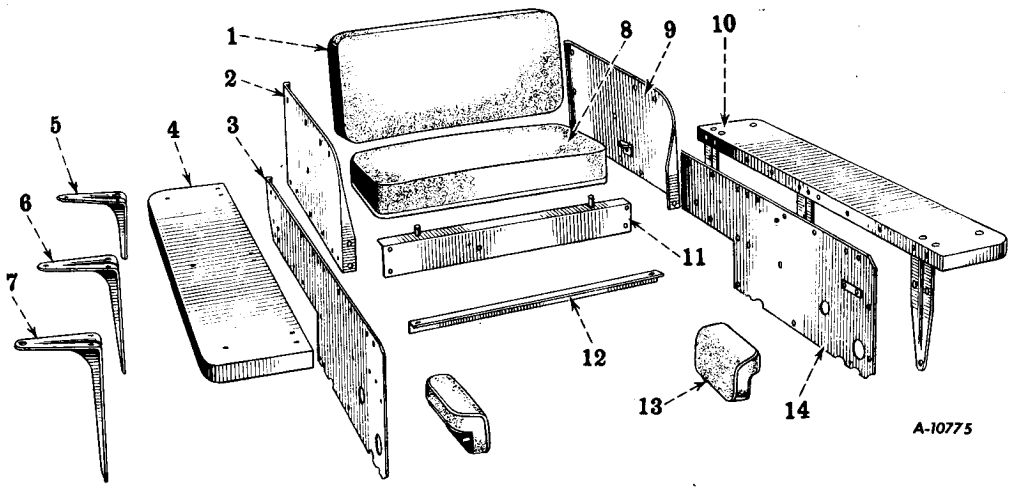

Reference numbers only are shown in illustration. Use I H part numbers in ordering.
Unnumbered parts in the illustrations are the same as corresponding parts shown with numbers.

SEAT AND FENDERS

1	255 082 R92	Seat Cushion Back	1
	179 837	Cap Screw, 3/8 x 3/4" N.C. Hex Head	2
	103 321	Lock Washer, 3/8"	2
2	42 628 DX	Seat Side Sheet, R.H. with Angle Bracket	1
	179 835	Cap Screw, 3/8 x 5/8" N.C. Hex Head	4
	220 066	Hex Nut, 3/8" N.C.	2
	103 321	Lock Washer, 3/8"	4
3	41 536 DX	Fender Side Sheet, R.H. with Spacer	1
	181 360	Cap Screw, 3/8 x 3/4" N.F. Hex Head	4
	179 839	Cap Screw, 3/8 x 1" N.C. Hex Head	1
	103 026	Hex Nut, 3/8" N.F.	4
	103 321	Lock Washer, 3/8"	5
	Q 1 504	Washer, 7/8" O.D. x 13/32" I.D. x No. 16 Gauge	5
4	42 623 DA	Fender, R.H.	1
	14 991 R1	Carriage Bolt, 3/8 x 5/8" N.C.	9
	181 360	Cap Screw, 3/8 x 3/4" N.F. Hex Head	6
	220 066	Hex Nut, 3/8" N.C.	9
	103 026	Hex Nut, 3/8" N.F.	5
	103 321	Lock Washer, 3/8"	15
	Q 1 504	Washer, 7/8" O.D. x 13/32" I.D. x No. 16 Gauge	2
5	42 626 D	Fender Bracket, Rear	2
	179 840	Cap Screw, 3/8 x 1-1/8" N.F. Hex Head	4
	181 427	Cap Screw, 1/2 x 1" N.F. Hex Head	8
	103 026	Hex Nut, 3/8" N.F.	4
	103 028	Hex Nut, 1/2" N.F.	8
	103 321	Lock Washer, 3/8" N.F.	4
	103 323	Lock Washer, 1/2" N.F.	8

CHASSIS

REF. NO.	PART NUMBER	DESCRIPTION	SERIAL NUMBER	NO. REQ'D.
		SEAT AND FENDERS—Continued		
6	42 625 D	Fender Bracket, Center		2
	181 364	Cap Screw, 3/8 x 1" N.F. Hex Head		4
	179 879	Cap Screw, 1/2 x 3/4" N.C. Hex Head		2
	181 429	Cap Screw, 1/2 x 1-1/4" N.F. Hex Head		4
	103 026	Hex Nut, 3/8" N.F.		4
	103 028	Hex Nut, 1/2" N.F.		4
	103 321	Lock Washer, 3/8"		4
	103 323	Lock Washer, 1/2"		6
7	42 625 D	Fender Bracket, Front		2
	181 364	Cap Screw, 3/8 x 1" N.F. Hex Head		4
	179 879	Cap Screw, 1/2 x 3/4" N.C. Hex Head		2
	181 433	Cap Screw, 1/2 x 1-3/4" N.F. Hex Head		4
	103 026	Hex Nut, 3/8" N.F.		4
	103 028	Hex Nut, 1/2" N.F.		4
	103 321	Lock Washer, 3/8"		4
	103 323	Lock Washer, 1/2"		6
8	255 083 R92	Seat Cushion Bottom		1
9	42 627 DX	Seat Side Sheet, L.H. with Angle Bracket		1
	179 835	Cap Screw, 3/8 x 5/8" N.C. Hex Head		4
	220 066	Hex Nut,3/8" N.C.		2
	103 321	Lock Washer, 3/8"		4
10	42 622 DA	Fender, L.H.		1
	14 991 R1	Carriage Bolt, 3/8 x 5/8" N.C.		9
	181 360	Cap Screw, 3/8 x 3/4" N.F. Hex Head		6
	220 068	Hex Nut, 3/8" N.C.		9
	103 026	Hex Nut, 3/8" N.F.		5
	103 321	Lock Washer, 3/8"		15
	Q 1 504	Washer, 7/8" O.D. x 13/32" I.D. x No. 16 Gauge		2
11	42 629 DX	Seat Support, Front with Guides		1
	181 360	Cap Screw, 3/8 x 3/4" N.F. Hex Head		4
	103 026	Hex Nut, 3/8" N.F.		4
	103 321	Lock Washer, 3/8"		4
12	42 630 D	Tool Box and Seat Support Angle, Rear		1
	181 360	Cap Screw, 3/8 x 3/4" N.F.		2
	103 026	Hex Nut, 3/8" N.F.		2
	103 321	Lock Washer, 3/8"		2
13	255 077 R92	Seat Cushion, Side		2
	179 814	Cap Screw, 5/16 x 5/8" N.C. Hex Head		4
	103 320	Lock Washer, 5/16"		4
14	41 535 DAX	Fender Side Sheet, L.H. with Spacer		1
	181 360	Cap Screw, 3/8 x 3/4" N.F. Hex Head		4
	179 839	Cap Screw, 3/8 x 1" N.C. Hex Head		1
	103 026	Hex Nut, 3/8" N.F.		4
	103 321	Lock Washer, 3/8"		5
	Q 1 504	Washer, 7/8" O.D. x 13/32" I.D. x No. 16 Gauge		5
	69 081 D	Tool Box		1

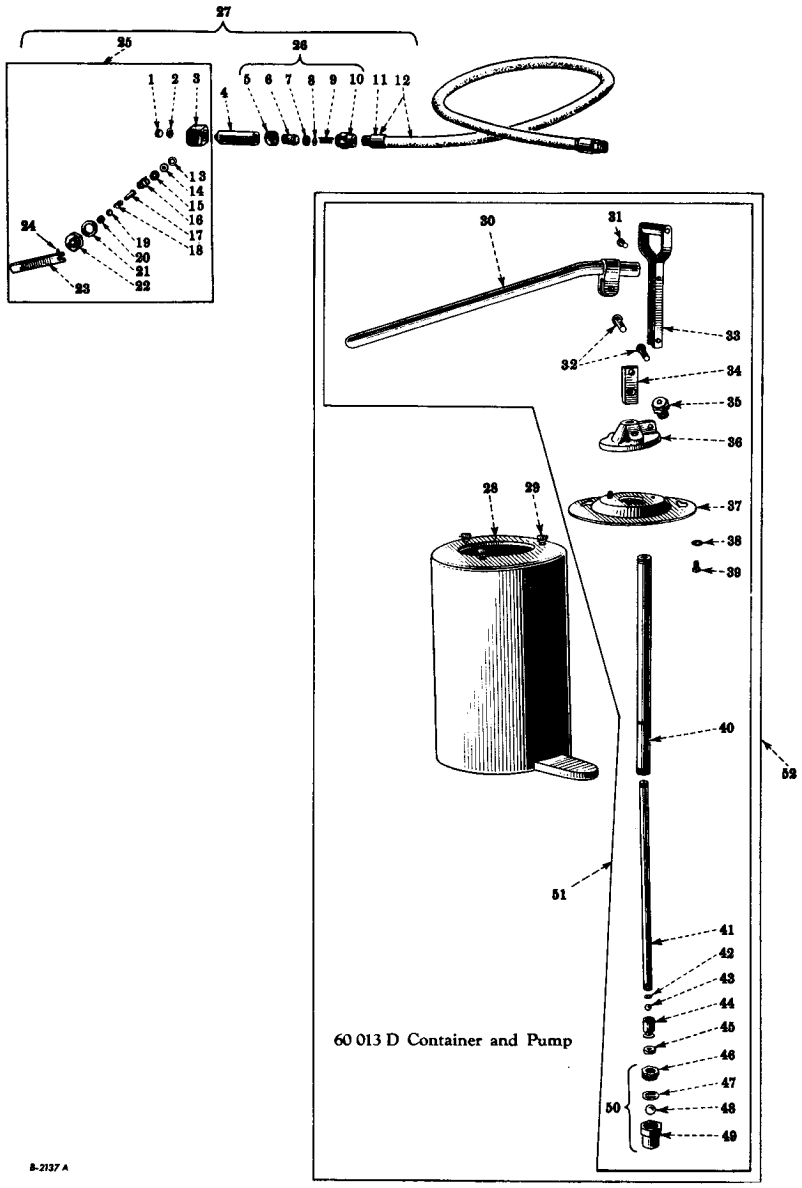

BUCKET LUBRICATOR
(TDR 22001 to 23865)

Reference numbers only are shown in illustration. Use I H part numbers in ordering. Unnumbered parts in the illustrations are the same as corresponding parts shown with numbers.

REF. NO.	PART NUMBER	MFR'S. NUMBER	DESCRIPTION	SERIAL NUMBER	NO. REQ'D.
			BUCKET LUBRICATOR—(Lincoln Engineering Company) (TDR 22001 to 23865)		
1	40 649 D	10-618	Bucket Lubricator Hose Coupler Nozzle Body Plug		1
2	40 657 D	31-016	Bucket Lubricator Hose Coupler Plug Gasket		1
3	40 648 D	10-617	Bucket Lubricator Hose Coupler Giant Nozzle Body		1
4	53 187 D	11-137	Bucket Lubricator Hose Coupler Adapter		1
5	40 642 D	10-534	Bucket Lubricator Hose Swivel Collar		1
6	40 641 D	10-533	Bucket Lubricator Hose Swivel Stud		1
7	40 631 D	36-019	Bucket Lubricator Hose Swivel Cup Leather		1
8	40 703 D	48-080	Bucket Lubricator Hose Swivel Washer		1
9	40 713 D	56-014	Bucket Lubricator Hose Swivel Spring		1
10	40 646 D	10-541	Bucket Lubricator Hose Swivel Body		1
11	40 725 D	80-356	Bucket Lubricator Hose Fitting		2
12	36 946 D	79-060	Bucket Lubricator Hose with 2 Fittings, 40 725 D (5 Feet)		1
13	40 693 D	45-033	Bucket Lubricator Hose Coupler Giant Packing Washer		1
14	40 661 D	34-037	Bucket Lubricator Hose Coupler Giant Packing		1
15	40 636 D	A10-450	Bucket Lubricator Hose Coupler Check Nut		1
16	40 712 D	55067	Bucket Lubricator Hose Coupler Check Seat Spring		1
17	40 644 D	10-537	Bucket Lubricator Hose Coupler Plunger		1
18	40 711 D	55-063	Bucket Lubricator Hose Coupler Plunger Spring		1
19	40 700 D	48-077	Bucket Lubricator Hose Coupler Packing Washer		1
20	40 628 D	34-039	Bucket Lubricator Hose Coupler Packing		1
21	40 656 D	30-012	Bucket Lubricator Hose Coupler Gland Gasket		1
22	40 640 D	10-528	Bucket Lubricator Hose Coupler Packing Gland		1
23	53 196 D	11-138	Bucket Lubricator Hose Coupler Handle with Pin		1
24	40 647 D	10-551	Bucket Lubricator Hose Coupler Plunger Pin		1
25	40 728 DA	81-219 IH	Bucket Lubricator Giant Coupler, Complete		1
			(Composed of:		
			1 Packing 40 628 D		
			1 Nut 40 636 D		
			1 Gland 40 640 D		
			1 Plunger 40 644 D		
			1 Pin 40 647 D		
			1 Body 40 648 D		
			1 Plug 40 649 D		
			1 Gasket 40 656 D		
			1 Packing 40 661 D		
			1 Washer 40 693 D		
			1 Washer 40 700 D		
			1 Spring 40 711 D		
			1 Spring 40 712 D		
			1 Handle 53 196 D)		
26	36 947 D	80-353	Bucket Lubricator Hose Swivel, Complete		1
			(Composed of:		
			1 Leather 40 631 D		
			1 Stud 40 641 D		
			1 Body 40 646 D		
			1 Washer 40 703 D		
			1 Spring 40 713 D)		

REF. NO.	PART NUMBER	MFR'S. NUMBER	DESCRIPTION	SERIAL NUMBER	NO. REQ'D.
			BUCKET LUBRICATOR—(Lincoln Engineering Company)—Continued (TDR 22001 to 23865)		
27	53 192 D	81-220-IH	Bucket Lubricator Hose, 36 946 D, Complete with Swivel, 36 947 D, Coupler, 40 728 DA and Adapter, 53 187 D		1
28	61 736 D	60-041	Container		1
29	55 479 D	11-225	Cover Screw		3
30	53 193 D	90-271	Bucket Lubricator Pump Lever Handle		1
31	61 735 D	11-283	Toggle Pin		1
32	40 638 D	10-472	Bucket Lubricator Pump Toggle Pin		2
	103 372		Cotter Pin, 3/32 x 1/2"		2
33	53 189 D	64-280	Bucket Lubricator Pump Toggle		1
34	40 655 D	11-557	Bucket Lubricator Pump Outlet		1
35	37 290 D	5750	Giant Button Head Fitting, 1/4"		1
36	61 740 D	40-227	Pump Casting		1
37	62 159 D	45-620	Cover Plate		1
39	179 790		Cap Screw, 1/4 x 7/16" N.C. Hex Head		3
38	115 547	66-170	Cover Plate Screw Washer (Shakeproof 1 214)		3
	179 790		Follows Ref. No. 37		
40	61 737 D	61-229	Pump Tube		1
41	61 738 D	62-111	Pump Plunger Rod		1
42	40 698 D	45-559	Bucket Lubricator Pump Piston Disc		1
43	29 784 D	66-002	Bucket Lubricator Pump Piston Check Ball, 5/16"		1
44	40 652 D	11-550	Bucket Lubricator Pump Piston		1
45	40 630 D	35-020	Bucket Lubricator Pump Piston Packing		1
46	61 732 D	11-127	Collar - Foot Valve		1
47	62 573 D	45-608	Foot Valve Disc		1
48	31 326 H	66-144	Foot Valve Check Ball, 3/4"		1
49	61 733 D	11-128	Body - Foot Valve		1
50	61 739 D	81-207	Foot Valve, Complete		1
			(Composed of:		
			1 Ball 31 326 H		
			1 Collar 61 732 D		
			1 Body 61 733 D		
			1 Disc 62 573 D)		

REF. NO.	PART NUMBER	MFR'S. NUMBER	DESCRIPTION	SERIAL NUMBER	NO. REQ'D
			BUCKET LUBRICATOR—(Lincoln Engineering Company)—Continued (TDR 22001 to 23865)		
51	62 352 D	81-368	Bucket Lubricator Pump, Complete		1
			(Composed of:		
			1 Ball	29 784 D	
			1 Fitting	37 290 D	
			1 Packing	40 630 D	
			1 Pin	40 638 D	
			1 Piston	40 652 D	
			1 Outlet	40 655 D	
			1 Disc	40 698 D	
			1 Toggle	53 189 D	
			1 Handle	53 193 D	
			1 Valve	61 739 D	
			1 Pin	61 735 D	
			1 Tube	61 737 D	
			1 Rod	61 738 D	
			1 Casting	61 740 D	
			1 Plate	62 159 D	
			3 Washer	115 547	
			3 Screw	179 790)	
52	60 013 D	1218	Bucket Lubricator Complete with Pump (Less Hose)		1
			(40 Lb. Capacity)		
	60 012 D	1217	Bucket Lubricator 60 013 D, with Pump and Hose 53 192 D		1
			(40 Lb. Capacity)		

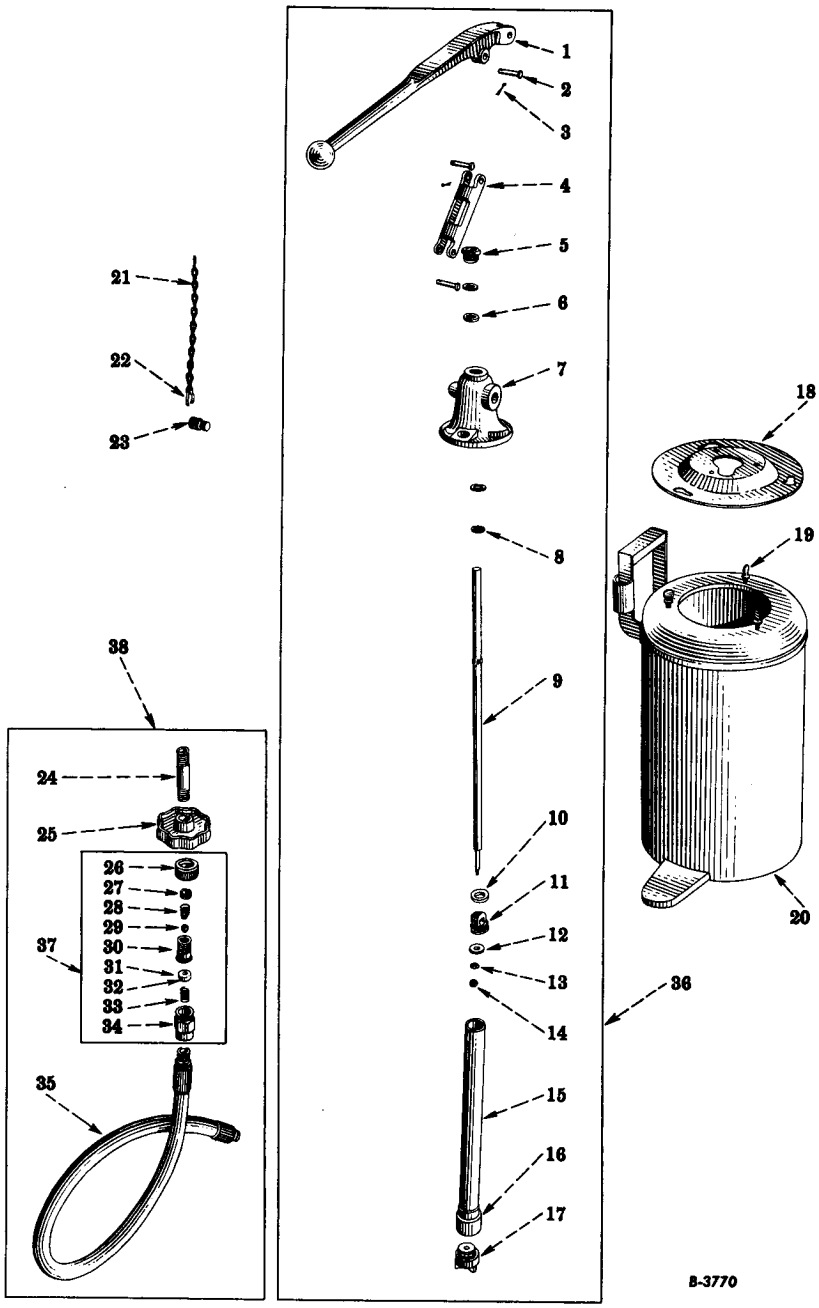

BUCKET LUBRICATOR—(Lincoln Engineering Company)
(TDR 23866 up)

Reference numbers only are shown in illustration. Use I H part numbers in ordering.
Unnumbered Parts in the illustration are the same as corresponding parts shown with numbers.

CHASSIS

REF. NO.	PART NUMBER	MFR'S. NUMBER	DESCRIPTION	SERIAL NUMBER	NO. REQ'D
			BUCKET LUBRICATOR—(Lincoln Engineering Company) (TDR 23866 up)		
1	256 162 R1	40-067	Pump Handle		1
2	40 638 D	10-472	Toggle Pin		3
3	103 372	66-031	Cotter Pin, 3/32 x 1/2"		3
4	52 123 D	45-604	Toggle		1
5	256 157 R1	10-256	Connecting Rod Packing Gland		1
6	256 161 R11	35-004	Connecting Rod Packing		1
7	256 163 R1	40-324	Pump Body		1
8	256 165 R1	48-039	Packing Washer		1
9	256 159 R1	11-284	Connecting Rod		1
10	256 160 R1	32-016	Piston Packing		1
11	256 164 R1	41-046	Pump Piston		1
12	256 158 R1	10-361	Pump Piston Seat		1
13	115 547	66-170	Lockwasher, 1/4"		1
14	114 492	51-009	Hex Nut, 1/4" - 28 N.F.		1
15	256 168 R1	61-230	Pump Tube		1
16	256 167 R1	61-024	Pump Tube Adapter		1
17	256 170 R91	80-179	Foot Valve		1
18	62 159 D	45-620	Cover Plate		1
	179 790	50-037	Cap Screw, Hex-Hd., 1/4 - 20 N.C. x 7/16"		3
	115 547	66-170	Lockwasher, 1/4"		3
19	55 479 D	11-225	Cover Screws		3
20	256 166 R91	60-045	Container		1
21	252 991 R1	66-529	Chain		1
22	253 124 R1	66-307	Ring Loop		1
23	261 357 R1	12-496	Nozzle Plug		1
24	262 885 R1	62-242	Nozzle		1
25	252 989 R1	41-157	Hand Wheel		1
26	40 642 D	10-534	Swivel Collar		1
27	253 204 R1	11-049	Check Seat		1
28	253 205 R1	57-017	Nozzle Spring		1
29	253 202 R1	10-759	Nozzle Check		1
30	253 203 R1	11-048	Swivel Stud		1
31	40 631 D	36-019	Cup Leather		1
32	40 703 D	48-080	Swivel Washer		1
33	40 713 D	56-014	Swivel Spring		1
34	40 646 D	10-541	Swivel Body		1
35	53 207 D	79-036	Hose (3 Feet Long)		1

REF. NO.	PART NUMBER	MFR'S. NUMBER	DESCRIPTION	SERIAL NUMBER	NO. REQ'D
			BUCKET LUBRICATOR—(Lincoln Engineering Company)—Continued (TDR 23866 up)		
36	256 177 R91	81-893	Pump, Complete		1
			(Composed of:		
			1 Adapter	256 167 R1	
			1 Body	256 163 R1	
			3 Pins	103 372	
			1 Gland	256 157 R1	
			1 Handle	256 162 R1	
			1 Lockwasher	115 547	
			1 Name Plate	256 169 R1	
			1 Nut	114 492	
			3 Pins	40 638 D	
			1 Piston	256 164 R1	
			1 Piston Packing	256 160 R1	
			1 Rod	256 159 R1	
			1 Rod Packing	256 161 R11	
			1 Screw	113 256	
			1 Seat	256 158 R1	
			1 Toggle	52 123 D	
			1 Tube	256 168 R1	
			1 Valve	256 170 R91	
			1 Washer	256 165 R1)	
37	253 160 R91	80-924	Check and Swivel, Complete		
			(Composed of:		
			1 Body 40 646 D 1 Spring 253 205 R1		
			1 Seat 253 204 R1 1 Stud 253 203 R1		
			1 Collar 40 642 D 1 Spring 40 713 D		
			1 Leather 40 731 D 1 Washer 40 703 D)		
			1 Check 253 202 R1		
38	261 358 R92	82-188	Nozzle and Hose, Complete		1
			(Composed of:		
			1 Hose 53 207 D 1 Wheel 252 989 R1		
			1 Check and 1 Bushing 261 355 R1		
			Swivel 253 160 R91 1 Nozzle 262 855 R1)		
	256 169 R1	65-531	Name Plate		1
	261 250 R92	201-265	Bucket Lubricator, Complete		1
			(Composed of:		
			1 Chain	252 991 R1	
			1 Container	256 166 R91	
			1 Cover	62 159 D	
			3 Screws	55 479 D	
			1 Loop	253 124 R1	
			1 Nozzle and Hose, Complete	261 358 R92	
			1 Plug	261 357 R1	
			1 Pump, Complete	256 177 R91	
			3 Screws	179 790	
			3 Washers	115 547)	
	261 355 R1	10-461	Bushing (For Hose and Nozzle)		1
	113 256	66-081	Name Plate Screw, No. 2 - 56 N.C. x 1/8"		2

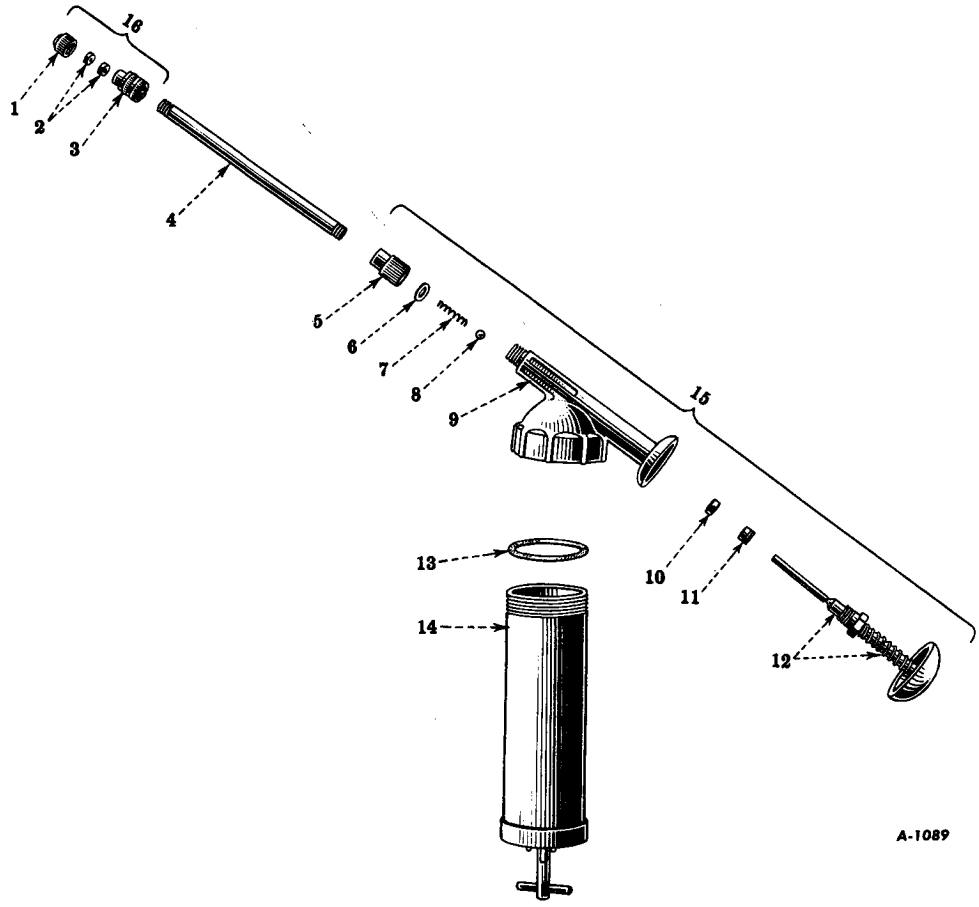

Reference numbers only are shown in illustration. Use I H part numbers in ordering.

REF. NO.	PART NUMBER	MFR'S. NUMBER	DESCRIPTION	SERIAL NUMBER	NO. REQ'D.
			HAND LUBRICATOR—(Lincoln Engineering Company)		
	Q 3 794	1020	Hand Lubricator - 9 Ounces		1
1	39 653 D	10-733	Nozzle Cap		1
2	39 656 DX	34-050	Set of Two Linpack Washer		1
3	39 652 D	10-539	Nozzle Body		1
4	1/8 x 6"	67-020	Pipe Nipple (TBE) - Nozzle Extension		1
5	39 875 D	10-453	Nozzle Cap Adapter		1
6	39 655 D	33-018	Nozzle Cap Adapter Gasket		1
7	39 870 D	55-046	Pump Check Spring		1
8	39 659 D	66-011	Pump Check Ball, 7/32"		1
9	39 868 D	41-052	Pump Body Casting		1
10	39 665 D	34-034	Plunger Packing		1
11	39 651 D	10-492	Plunger Packing Screw		1
12	39 663 D	89-975	Plunger, Assembly		1
13	39 654 D	32-029	Container Gasket		1
14	39 661 D	81-093	Container Tube, Assembly		1
15	39 662 D	89-974	Head, Assembly		1
16	39 800 D	5804-1	Nozzle, Complete		1

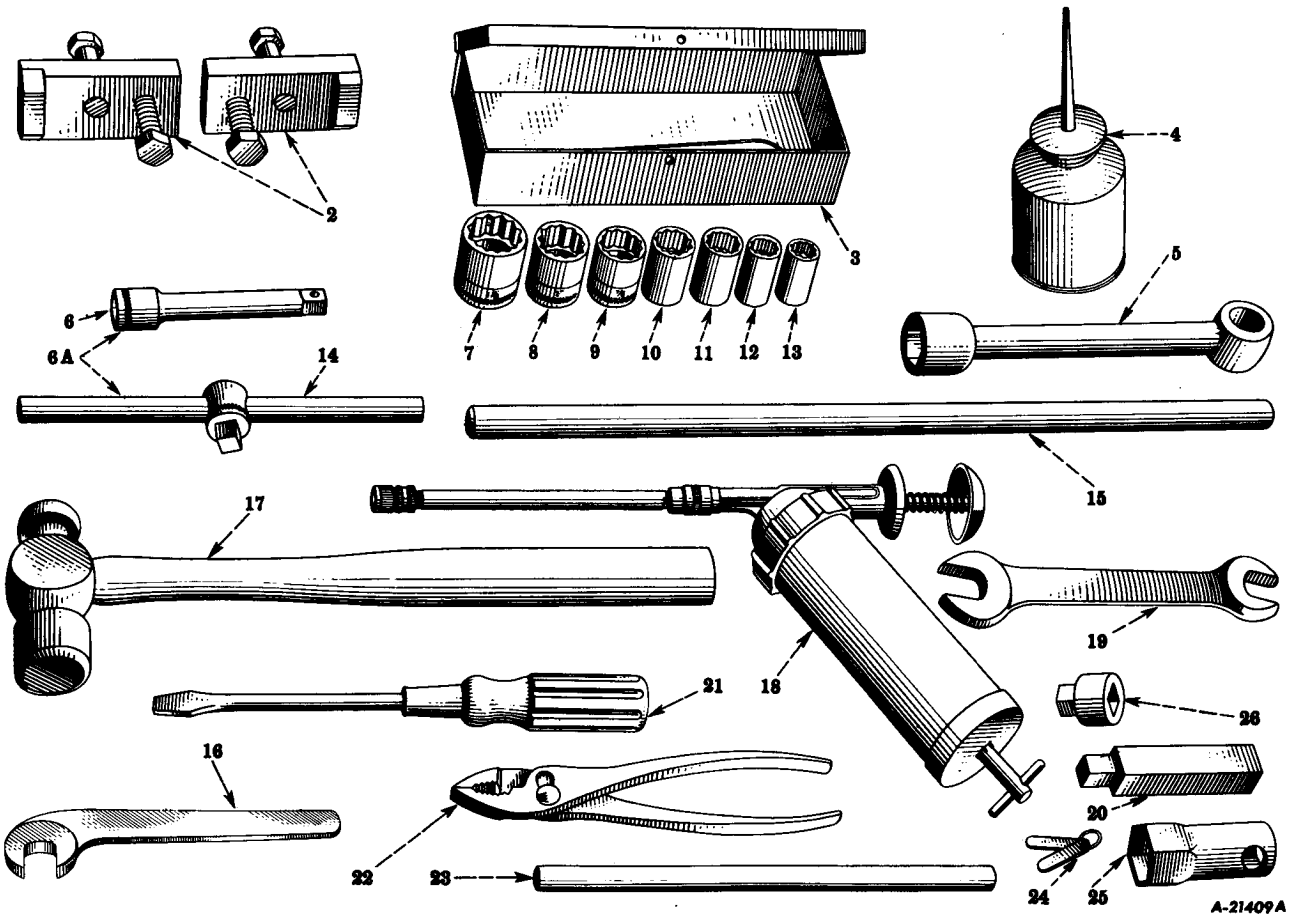

Reference numbers only are shown in illustration. Use I H part numbers in ordering.

TOOLS

	19 329 D	Socket Wrench Set and Carrying Case	
		(Includes Reference No. 3 and 7 to 14 Inclusive, also 20)	
		(68 405 DX Will Work)	1
	68 405 DX	Socket Wrench Set with Drain Plug Wrench	
		(Includes Reference No. 3 and 6 to 14 Inclusive, also 20)	
		(19 329 D Will Work)	1
2	58 920 DAX	Steering Clutch Compressor Angle Tool with Block	2
	179 890	Cap Screw, 1/2 x 2-1/4" N.C., Hex Head	2
	179 927	Cap Screw, 5/8 x 1-1/2" N.C., Hex Head	2
3	19 328 D	Socket Wrench Set Carrying Case (Optional with 68 416 D)	1
3	68 416 D	Socket Wrench Set Carrying Case (Optional with 19 328 D)	1
4	H 156	Oil Can	1
5	25 462 DA	Stem Handled Socket Wrench, 1-1/32"	1

REF. NO.	PART NUMBER	DESCRIPTION	SERIAL NUMBER	NO. REQ'D
		TOOLS—Continued		
6	68 414 D	Socket Wrench Handle Extension		1
6A	68 413 DX	Socket Wrench "T" Handle 68 413 D with Extension 68 414 D		
		(Optional with 19 323)		1
7	19 327 D	Hex Socket Wrench, 1-1/8" (Optional with 68 412 D)		1
7	68 412 D	Hex Socket Wrench, 1-1/8" (Optional with 19 327 D)		1
8	19 326 D	Hex Socket Wrench, 1" (Optional with 68 411 D)		1
8	68 411 D	Hex Socket Wrench, 1" (Optional with 19 326 D)		1
9	19 324 D	Hex Socket Wrench, 7/8" (Optional with 68 410 D)		1
9	68 410 D	Hex Socket Wrench, 7/8" (Optional with 19 324 D)		1
10	19 325 D	Hex Socket Wrench, 13/16" (Optional with 68 409 D)		1
10	68 409 D	Hex Socket Wrench, 13/16" (Optional with 19 325 D)		1
11	19 292 D	Hex Socket Wrench, 3/4" (Optional with 68 408 D)		1
11	68 408 D	Hex Socket Wrench, 3/4" (Optional with 19 292 D)		1
12	19 291 D	Hex Socket Wrench, 5/8" (Optional with 68 407 D)		1
12	68 407 D	Hex Socket Wrench, 5/8" (Optional with 19 241 D)		1
13	19 289 D	Hex Socket Wrench, 9/16" (Optional with 68 406 D)		1
13	68 406 D	Hex Socket Wrench, 9/16" (Optional with 19 289 D)		1
14	19 323 D	Socket Wrench Handle (Combination Off-Set and "T")		
		(Optional with 68 413 DX)		1
14	68 413 D	Socket Wrench "T" Handle		1
15	25 463 D	Stem Handled Socket Wrench Handle		1
16	9 534 DA	Front Idler Adjuster Wrench (Will Work for 2 584 T)		1
17	2 583 T	Ball Peen Hammer, 1-1/2 Lb.		1
18	Q 3 794	Hand Lubricator (9 Ounce Size) (See Detail Lists)		1
19	1 326 E	"S" Wrench (3/4 x 7/8")		1
20	20 156 D	Square Drain Plug Socket Wrench, 1/2" (Optional with 68 415 D)		1
20	20 157 D	Square Drain Plug Socket Wrench, 11/16" (Optional with 68 415 D)		1
20	68 415 D	Socket Head Plug Wrench, 1/2 x 3/4"		
		(Optional with 20 156 D and 20 157 D)		1
21	2 588 T	Screw Driver, 5" (Wood Handle)		1
22	2 587 T	Combination Slip Joint Pliers, 8" (Optional with 351 840 R91)		1
22	351 840 R91	Combination Slip Joint Pliers, 6" (Optional with 2 587 T)		1
23	25 466 D	Spark Plug Wrench Handle		1
24	45 578 DA	Breaker Point and Spark Plug Gauge		1
25	32 941 D	Spark Plug Wrench, 31/32"		1
26	262 894 R1	Track Roller Lubricating Plug Wrench		1
	65 227 D	Sprocket Drive Carrier Plate Tool (Field Change)		
		(Not Wide Tread)		1

PACKAGE ASSORTED GASKETS

PART NUMBER	DESCRIPTION		NO. REQ'D
255 985 R93	Engine Overhaul Gasket Package		
	112 Gaskets as Follows:		
	13 839 D	Oil Filter Case Retaining Bar Gasket	2
	13 839 D	Fuel Filter Case Stud Gasket	2
	13 841 D	Oil Filter Case Gasket	2
	13 841 D	Fuel Filter Case Gasket	1
	25 093 DA	Crankcase Oil Seal Retainer Plate Felt	1
	25 121 DC	Breather Pipe Flange Gasket	1
	25 352 D	Magneto Bracket Bolt Gasket	2
	32 181 D	Radiator Outlet Elbow Gasket	1
	32 309 DC	Crankcase Rear Oil Seal Gasket	1
	32 312 DB	Crankcase Oil Seal Retainer Plate Gasket	1
	32 314 DB	Crankcase Rear Dust Seal Gasket	1
	32 340 DB	Injection Pump Drive Housing Gasket	1
	32 342 DB	Injection Pump Drive Housing Cap Gasket	1
	32 362 D	Injection Pump Drive Housing Felt	1
	32 368 DD	Crankcase Front Plate Gasket	1
	32 371 DC	Crankcase Front Cover Gasket	1
	32 457 DC	Valve Housing Gasket	1
	32 458 DA	Valve Housing Cover Gasket	1
	32 505 DB	Magneto Bracket Bolt Gasket	1
	37 148 D	Nozzle Injector Plate Gasket	6
	37 148 D	Nozzle Valve Gasket	12
	39 757 DC	Push Rod Chamber Side Plate Gasket	2
	39 764 DB	Push Rod Chamber Rear Plate Gasket	1
	42 536 D	Radiator Inlet Elbow Gasket	1
	42 714 DB	Crankcase Rear Dust Seal Gasket	1
	42 715 DE	Crankcase Oil Pan Gasket	1
	42 733 DB	Crankcase Side Cover Gasket	1
	42 769 D	Carburetor Gasket	1
	42 789 D	Oil Pump Auxiliary Gear Upper Housing Gasket	1
	42 790 D	Oil Pump Auxiliary Gear Lower Housing Gasket	1
	42 790 D	Oil Pump Cover Gasket	1
	42 792 D	Oil Return Pipe Gasket	2
	42 941 D	Fan Belt Idler Shaft Felt	1
	42 959 DC	Oil Filter Gasket	1
	49 451 DA	Hour Meter Gasket	1
	51 527 DC	Water Trap Bracket Gasket (Bosch Pump)	1
	62 866 D	Push Rod Chamber Side Plate Bolt Washer	4
	250 550 R1	Intake Manifold End Cover Gasket	2
	251 042 R1	Pre-Combustion Chamber Gasket	12
	251 133 R2	Water Pump Body Gasket	1
	251 148 R2	Water Pump Oil Seal Housing Gasket	1
	251 167 R1	Exhaust Manifold Gasket	4
	251 169 R2	Engine Water Outlet Elbow Gasket	2
	251 170 R2	Engine Water Outlet Header Gasket	2
	251 329 R1	Intake Manifold Gasket-End	2
	251 330 R1	Intake Manifold Gasket-Center	1
	251 352 R1	Water Trap Bowl Gasket (Bosch Pump)	1
	254 753 R1	Thermostat Seal	2
	W-16210	Fan Belt Idler Pulley Felt	1
	260 003 R1	Crankcase Rear Oil Seal Retainer Gasket	1
	250 608 R1	Nozzle Fitting Dust Seal	6
	251 120 R1	Air Cleaner Pipe Gasket	1
	259 893 R1	Cylinder Head Gasket	2
	260 002 R1	Crankcase Rear Oil Seal Retainer Felt	2
	261 044 R1	Nozzle Body Dust Seal	6
	262 036 R1	Lubrication Oil Filter Base Gasket	1

PACKAGE ASSORTED GASKETS

PART NUMBER	DESCRIPTION		NO. REQ'D.
52 055 DA	Chassis Overhaul Gasket Package		
	75 Gaskets as Follows:		
	255 047 R1	Radiator Cap Gasket	1
	16 445 D	Gasoline Tube Clip Felt	1
	16 445 D	Oil Pressure Gauge Tube Clip Felt	1
	23 977 DA	Gasoline Tank Filler Cap Gasket	1
	28 910 DA	Water Trap Glass Gasket	1
	32 181 D	Radiator Outlet Flange Gasket	1
	40 928 D	Drive Bevel Gear Bearing Cage Filler Gasket	4
	40 929 D	Drive Bevel Gear Bearing Cage Cap Gasket	2
	40 990 D	Track Frame Pivot Bracket Cap Gasket	2
	41 460 D	Sprocket Drive Pinion Inner Bearing Cage Gasket	2
	41 462 D	Sprocket Drive Pinion Outer Bearing Cage Gasket	4
	41 463 D	Steering Clutch Support Bearing Cage Gasket	2
	41 638 D	Air Cleaner Pipe Front Gasket	1
	41 660 D	High and Low Range Idler Shaft Retainer Gasket	1
	41 662 DA	Bevel Pinion Shaft Bearing Retainer Front Gasket	1
	41 666 D	Transmission Driving Shaft Bearing Retainer Gasket	1
	41 668 DA	Transmission End Cover Gasket	1
	41 884 D	Sprocket Drive Gear Cover Gasket	2
	41 893 D	Sprocket Drive Gear Outer Bearing Cage Gasket	4
	42 101 D	Track Idler Cap Gasket	4
	42 134 D	Track Frame Diagonal Brace Bearing Felt	4
	42 289 D	Power Take-off Cover Gasket	1
	42 445 D	Steering Clutch Release Actuator Gasket	2
	42 495 D	Fuel Tank Filler Cap Gasket	1
	42 511 D	Gear Shift Housing Gasket	1
	42 536 D	Radiator Inlet Elbow Gasket	1
	42 537 D	Radiator Gasket	2
	42 552 D	Main Frame Cover Gasket	1
	42 559 D	Steering Clutch Inspection Cover Gasket	2
	51 238 D	Drive Bevel Gear Bearing Cage Gasket	2
	52 033 D	Radiator Overflow Pipe Gasket	1
	56 008 D	Steering Clutch Release Fork Upper Bearing Felt	2
	56 009 D	Steering Clutch Release Fork Upper Bearing Cage Gasket	2
	56 009 D	Steering Clutch Release Fork Upper Bearing Retainer Gasket	2
	56 014 D	Steering Clutch Inspection Cover Gasket	2
	58 185 D	Air Cleaner Gasket	1
	58 210 D	Air Cleaner Top Cover Gasket	1
	58 210 D	Air Cleaner Pipe Rear Gasket	1
	64 807 D	Sprocket Drive Pinion Outer Bearing Cap Packing Ring	2
	64 808 D	Sprocket Drive Pinion Inner Bearing Retainer Gasket	2
	64 811 D	Steering Clutch Support Bearing Retainer Gasket	2
	64 812 D	Sprocket Drive Gear Cover Gasket	2
	251 631 R1	Air Cleaner Pipe Front Flange Gasket	1

PACKAGE ASSORTED DECALS

PART NUMBER	DESCRIPTION			NO. REQ'D
258 394 R92	Decal Service Package			
	(Composed of:			
	1	IH of Canada, Ltd.	1 000 693 R3	
	1	Diesel	1 000 719 R1	
	1	International	1 000 737 R1	
	1	U.S. Patents	1 000 796 R4	
	1	Lighting Switch Transfer	1 000 798 R1	
	1	Injection Pump Lubrication	1 000 889 R4	
	1	IH, Chicago, U.S.A.	1 000 978 R1	
	1	Generator Warning	1 001 071 R2	
	1	IH Monogram	1 001 157 R3	
	2	International Diesel	1 001 159 R1	
	1	Air Cleaner Instructions	1 001 181 R3	
	2	Model Symbol	1 001 264 R1)	

OVERHAUL AND IMPROVEMENT PACKAGES

PART NUMBER	DESCRIPTION	SERIAL NUMBER	NO. REQ'D
	ENGINE—DIESEL		
250 952 R92	Replacement Piston Ring Kit (Perfect Circle)		
	(Consists of Sufficient Rings For One Engine)(Optional with 261 154 R91)		1
254 287 R96	Field Package Crankshaft and Set of Crankshaft Bearings, 257 265 R94		
	(.030 Undersize) Complete		1
259 752 R91	Flywheel Service Package (Will Work for 5 958 DBX)	TDRM 22001 to 23704	1
260 910 R91	Dual Fuel Filter Service Package	TDRM 22001 to 22875	1
260 978 R91	Valve Housing Service Package (Will Work for 251 218 R11)	TDRM 22001 to 24752	1
261 154 R91	Replacement Piston Ring Kit (Sealed Power)		
	(Consists of Sufficient Rings for One Engine)		
	(Optional with 250 952 R92)		1
262 040 R91	Full Flow Lubricating Oil Filter Service Package		
	(Will Work for 251 415 R91)	TDRM 22001 to 25008	1
262 146 R91	Lubricating Oil Filter Element Service Package		
	(Will Work for 261 627 R91)		2
354 774 R91	Carburetor Body Service Package		
	(Will Work for 5 049 DAX32)	TDRM 22001 to 23919	1
	CHASSIS		
259 873 R91	Steering Brake Band Lining Package (Front or Rear)		4
259 874 R91	Steering Brake Band Lining Package (Center)		2
260 226 R91	Bevel Pinion and Shaft Front Bearing Improvement Package	TDR 22001 to 22593	1
260 660 R91	Drive Bevel Gear Bolt Service Package		
	(Will Work for 256 801 R1)	TDR 22001 to 22932	1
261 127 R91	Track Roller and Shaft Service Package (Single Flange)		
	(No's. 1, 3 and 5) (Will Work for 5734-DY, 4102-DA,		
	and 56 133 D)	TDR 22001 to 23865	6
261 128 R91	Track Roller and Shaft Service Package (Double Flange)		
	(No's. 2 and 4) (Will Work for 5 734 DY, 41 400 DA,		
	and 56 134 D)	TDR 22001 to 23865	4
261 343 R91	Cylinder Head Replacement Gasket Package		1
	21 Gaskets as follows:		
	1 32 457 DC Valve Housing Gasket		
	1 32 458 DA Valve Housing Cover Gasket		
	4 32 459 D Valve Housing Cover Nut Gasket		
	4 251 167 R1 Exhaust Manifold Gasket		
	2 251 169 R2 Engine Water Outlet Elbow Gasket		
	2 251 170 R2 Engine Water Outlet Header Gasket		
	2 251 329 R1 Intake Manifold Gasket - End		
	1 251 330 R1 Intake Manifold Gasket (Center)		
	2 254 753 R1 Thermostat Seal		
	2 259 893 R1 Cylinder Head Gasket		

MEMORANDA

ATTACHMENTS

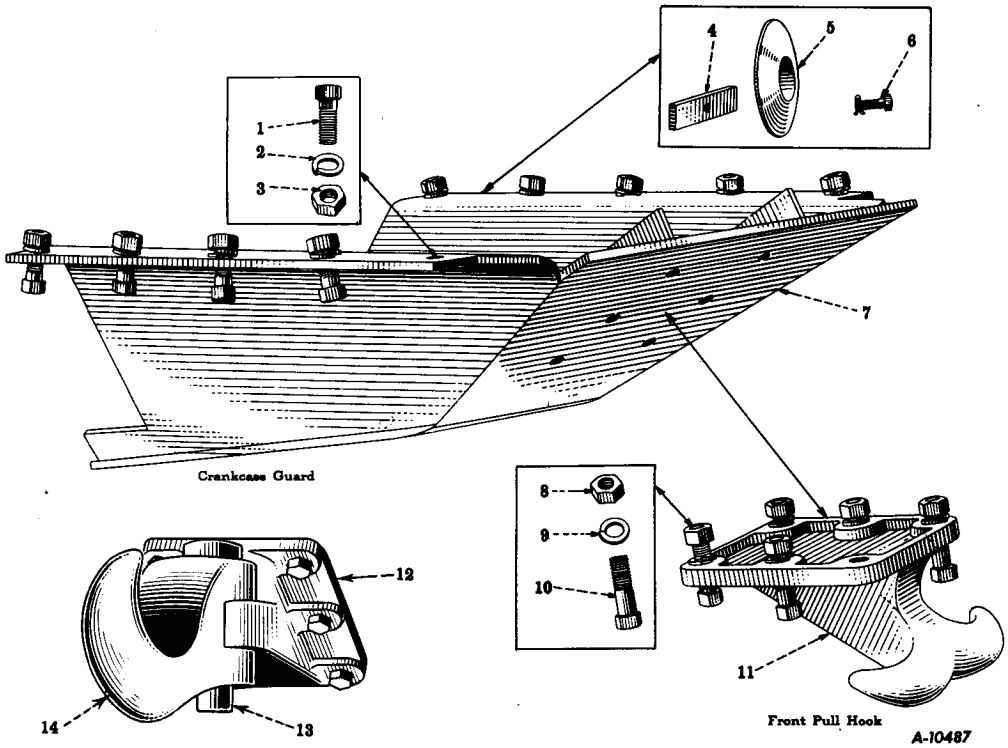

Reference numbers only are shown in illustration. Use I H part numbers in ordering.
Unnumbered parts in the illustrations are the same as corresponding parts shown with numbers.

CRANKCASE GUARD
FRONT PULL HOOK
SWIVEL FRONT PULL HOOK
(Special)

	42 887 D	Crankcase Guard Attachment (Consists of Ref. No.'s 1 to 7)	
		(Factory Application - Order on Machine Order Form)	
		(Field Application - Order Through Regular Service Parts	
		Channels)	1
	42 902 D	Front Pull Hook Attachment	
		(Consists of Ref. No.'s 8, 9, 10 and 11)	
		(Factory Application - Order on Machine Order Form)	
		(Field Application - Order Through Regular Service Parts	
		Channels)	1
	51 185 D	Swivel Front Pull Hook Attachment	
		(Consists of Ref. No.'s 12, 13 and 14)	
		(Factory Application - Order on Machine Order Form)	
		(Field Application - Order Through Regular Service Parts	
		Channels)	1
1	181 532	Follows Reference No. 7	
2	103 327	Follows Reference No. 7	
3	103 032	Follows Reference No. 7	

ATTACHMENTS

REF. NO.	PART NUMBER	DESCRIPTION	SERIAL NUMBER	NO. REQ'D.
		CRANKCASE GUARD FRONT PULL HOOK SWIVEL FRONT PULL HOOK (Special)—Continued		
4	42 877 D	Crankcase Guard Hand Hole Cover Support		1
5	5 977 DA	Crankcase Guard Hand Hole Cover		1
6	42 879 D	Crankcase Guard Hand Hole Cover Bolt, 1/2 x 1-1/2" N.F.		1
	103 384	Cotter Pin, 1/8 x 3/4"		1
7	42 880 DA	Crankcase Guard, Complete		1
	181 532	Cap Screw, 7/8 x 2" N.F. Hex Head		10
	103 032	Hex Nut, 7/8" N.F.		10
	103 327	Lock Washer, 7/8"		10
8	103 032	Follows Reference No. 11		
9	103 327	Follows Reference No. 11		
10	181 536	Follows Reference No. 11		
11	5 980 D	Front Pull Hook		1
	103 032	Hex Nut, 7/8" N.F.		6
	103 327	Lock Washer, 7/8"		6
	181 536	Cap Screw, 7/8 x 2-3/4" N.F. Hex Head		6
12	8 108 D	Swivel Front Pull Hook Bracket		1
	181 536	Cap Screw, 7/8 x 2-3/4" N.F. Hex Head		6
	103 032	Hex Nut, 7/8" N.F.		6
	103 327	Lock Washer, 7/8"		6
13	51 184 D	Swivel Front Pull Hook Pin		1
14	8 107 D	Swivel Front Pull Hook		1

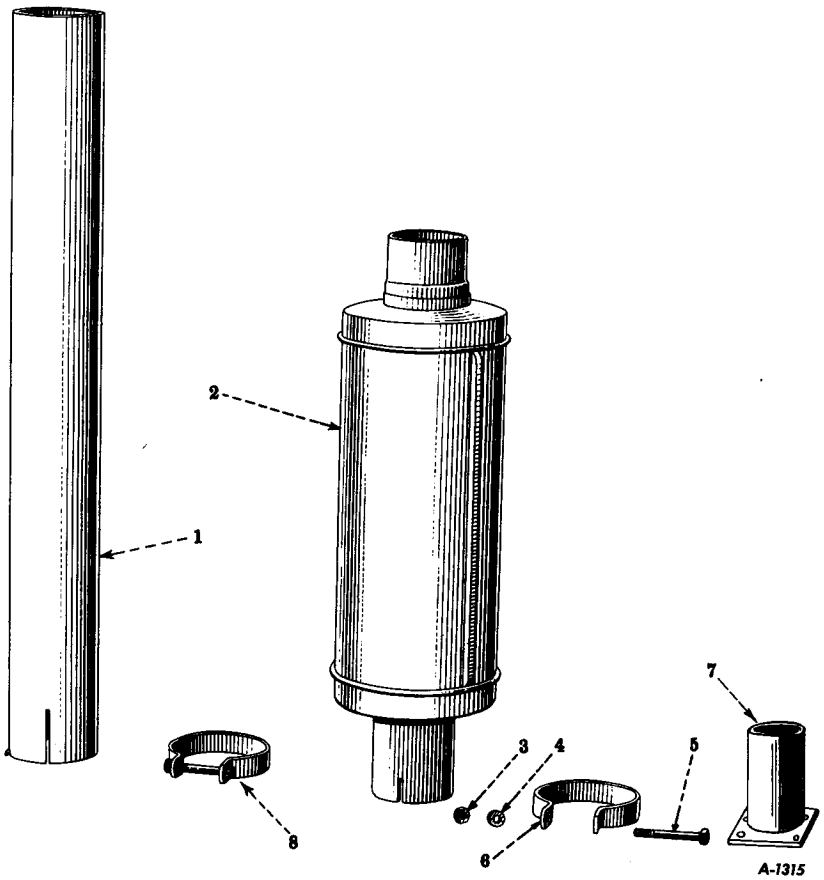

Reference numbers only are shown in illustration. Use I H part numbers in ordering.
Unnumbered parts in the illustrations are the same as corresponding parts shown with numbers.

EXHAUST MUFFLER AND EXHAUST EXTENSION (Special)

	254 070 R91	Exhaust Extension Attachment (Ref. No.'s 1 and 8)	
		(Factory Application - Order on Machine Order Form)	
		(Field Application - Order Through Regular Service Parts	
		Channels)	2
	46 339 D	Exhaust Muffler Attachment (Consists of Ref. No.'s 2 to 7)	
		(Factory Application Only - Order on Machine Order Form)	1
	46 645 D	Exhaust Muffler Attachment (Consists of Ref. No.'s 2 to 6)	
		(Field Application Only - Order Through Regular Service Parts	
		Channels)	1
1	40 151 D	Exhaust Pipe Extension	2
2	40 142 D	Exhaust Muffler	2
6	U 14 284	Exhaust Muffler Clamp	2
5	179 827	Cap Screw, 5/16 x 2-1/4" N.F., Hex Head	2
3	220 065	Hex Nut, 5/16" N.F.	2
4	103 320	Lock Washer, 5/16"	2
7	46 644 DX	Exhaust Pipe with Flange	2
8	U 14 284	Exhaust Pipe Extension Clamp	2
	179 827	Cap Screw, 5/16 x 2-1/4" N.F., Hex Head	2
	220 065	Hex Nut, 5/16" N.F.	2
	103 320	Lock Washer, 5/16"	2

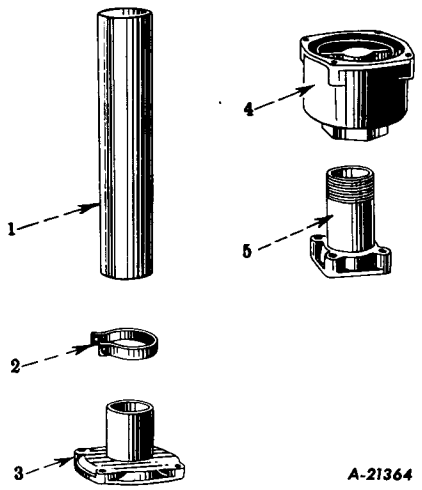

Reference numbers only are shown in illustration. Use I H part numbers in ordering.

SPARK ARRESTER (Special)

	52 418 D	Spark Arrester Attachment	
		(Factory Application - Order on Machine Order Form)	
		(Field Application - Order Through Regular Service Parts	
		Channels)	1
1	40 151 D	Spark Arrester Exhaust Pipe Extension	2
2	U 14 284	Spark Arrester Exhaust Pipe Extension Clamp	2
	179 827	Cap Screw, 5/16 x 2" N.F., Hex Head	2
	220 065	Hex Nut, 5/16" N.F.	2
	103 321	Lock Washer, 5/16"	2
3	8 384 D	Spark Arrester Top	2
	179 842	Cap Screw, 3/8 x 1-3/8" N.C., Hex Head	8
	103 321	Lock Washer, 3/8"	8
4	8 383 D	Spark Arrester Body	2
5	60 749 D	Spark Arrester Exhaust Pipe with Flange	1

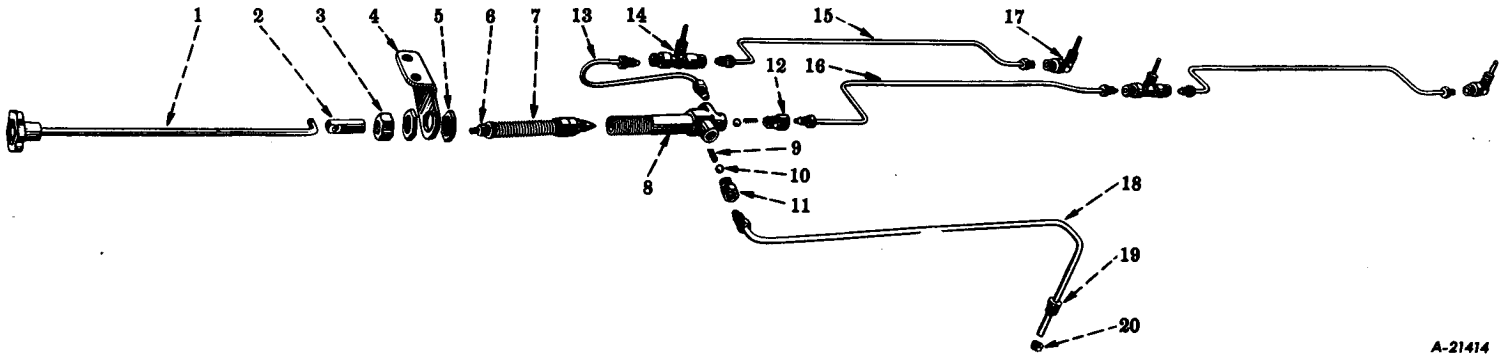

STARTING PRIMER (Special)

Reference numbers only are shown in illustration. Use I H part numbers in ordering.
Unnumbered parts in the illustrations are the same as corresponding parts shown with numbers.

ATTACHMENTS

REF. NO.	PART NUMBER	DESCRIPTION	SERIAL NUMBER	NO. REQ'D.
		STARTING PRIMER (Special)		
	255 067 R91	Starting Primer Attachment		
		(Factory Application Only - Order on Machine Order Form)		1
	255 068 R91	Starting Primer Attachment		
		(Field Application Only - Order Through Regular Service Parts		
		Channels)		1
1	255 069 R11	Starting Primer Control Rod and Button		1
	112 526	Cotter Pin, 1/16 x 3/8"		1
2	42 772 D	Starting Primer Control Rod End		1
3	54 694 D	Starting Primer Body Tube Nut		1
3	60 200 D	Starting Primer Body Tube Nut		1
4	50 682 D	Starting Primer Bracket		1
	179 816	Cap Screw, 5/16 x 3/4" N.C. Hex Head		2
	103 320	Lock Washer, 5/16"		2
5	42 215 D	Starting Primer Nut		1
6	54 697 D	Starting Primer Plunger Rod Nut		1
7	54 695 DA	Starting Primer Plunger with Nut, 54 697 D		1
7	59 884 D	Starting Primer Plunger		1
8	8 573 DX	Starting Primer Body		1
8	59 888 D	Starting Primer Body		1
9	54 709 D	Starting Primer Body Check Valve Spring		2
9	59 880 D	Starting Primer Body Check Valve Spring		2
10	57 293 D	Starting Primer Check Valve Ball, 3/16"		2
10	29 836 D	Starting Primer Check Valve Ball, 3/16"		2
11	54 708 D	Starting Primer Inlet Check Valve Body		1
11	59 887 D	Starting Primer Inlet Check Valve Body		1
12	54 710 D	Starting Primer Outlet Check Valve Body		1
12	59 889 D	Starting Primer Outlet Check Valve Body		1
13	254 898 R11	Starting Primer Tube No. 4, with 2 Nuts, 36 092 D		1
14	254 151 R11	Starting Primer Spray Tube Tee with 2 Nuts, 36 092 D		2
		(Will Work for 254 147 R91)		
15	254 895 R21	Starting Primer Tube No. 1 and No. 3 with 2 Nuts, 36 092 D		2
15	254 895 R2	Starting Primer Tube No. 1 and No. 3 (Order 254 895 R21)		2

ATTACHMENTS

REF. NO.	PART NUMBER	DESCRIPTION	SERIAL NUMBER	NO. REQ'D
		STARTING PRIMER (Special)—Continued		
16	254 896 R21	Starting Primer Tube No. 2, with 2 Nuts, 36 092 D		1
17	254 909 R11	Starting Primer Spray Tube Elbow with Nut, 36 092 D		
		(Will Work for 254 910 R1)		2
18	254 899 R11	Starting Primer Inlet Tube with 2 Nuts, 25 038 HA		1
19	32 896 D	Starting Primer Inlet Tube Gland		1
20	32 897 D	Starting Primer Inlet Tube Packing		2
	36 092 D	Coupling Nut		9
	25 038 HA	Coupling Nut		2
	53 136 D	Starting Primer, Complete (Optional with 54 692 DA)		1
		(Composed of:		
		2 Balls 29 836 D		
		2 Nuts 36 092 D		
		2 Springs 59 880 D		
		1 Plunger 59 884 D		
		1 Body 59 887 D		
		1 Body 59 888 D		
		1 Body 59 889 D		
		1 Nut 60 200 D		
		1 Nut 25 038 HA)		
	54 692 DA	Starting Primer, Complete (Optional with 53 136 D)		1
		(Composed of:		
		1 Body 8 573 DX		
		2 Nut 36 092 D		
		1 Nut 42 215 D		
		1 Nut 54 694 D		
		1 Plunger 54 695 DA		
		1 Retainer 54 708 D		
		2 Springs 54 709 D		
		1 Retainer 54 710 D		
		2 Balls 57 293 D		
		1 Nut 25 038 HA)		

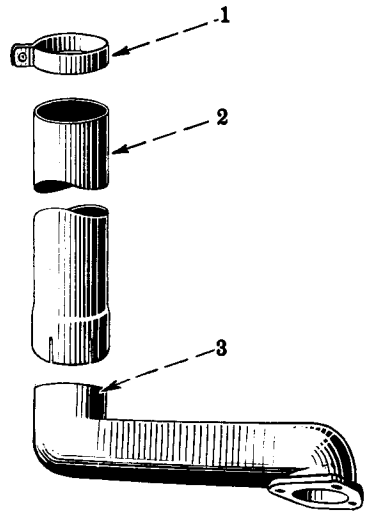

A-9524

Reference numbers only are shown in illustration. Use I H part numbers in ordering.

AIR CLEANER PIPE EXTENSION (Special)

	59 255 D	Air Pipe Extension Attachment	
		(Factory Application - Order on Machine Order Form)	
		(Field Application - Order Through Regular Service Parts	
		Channels)	1
1	45 908 DA	Air Pipe Extension Clamp	1
	179 839	Cap Screw, 3/8 x 1" N.C. Hex Head	1
	13 002 R1	Hex Nut, 3/8" N.C..	1
	103 321	Lock Washer, 3/8"	1
2	59 254 D	Air Pipe Extension	1
3	8 935 D	Air Pipe	1
	179 838	Cap Screw, 3/8 x 7/8" N.C. Hex Head	2
	186 288	Cap Screw, 3/8 x 4-1/2" N.C. Hex Head	1
	103 321	Lock Washer, 3/8"	3

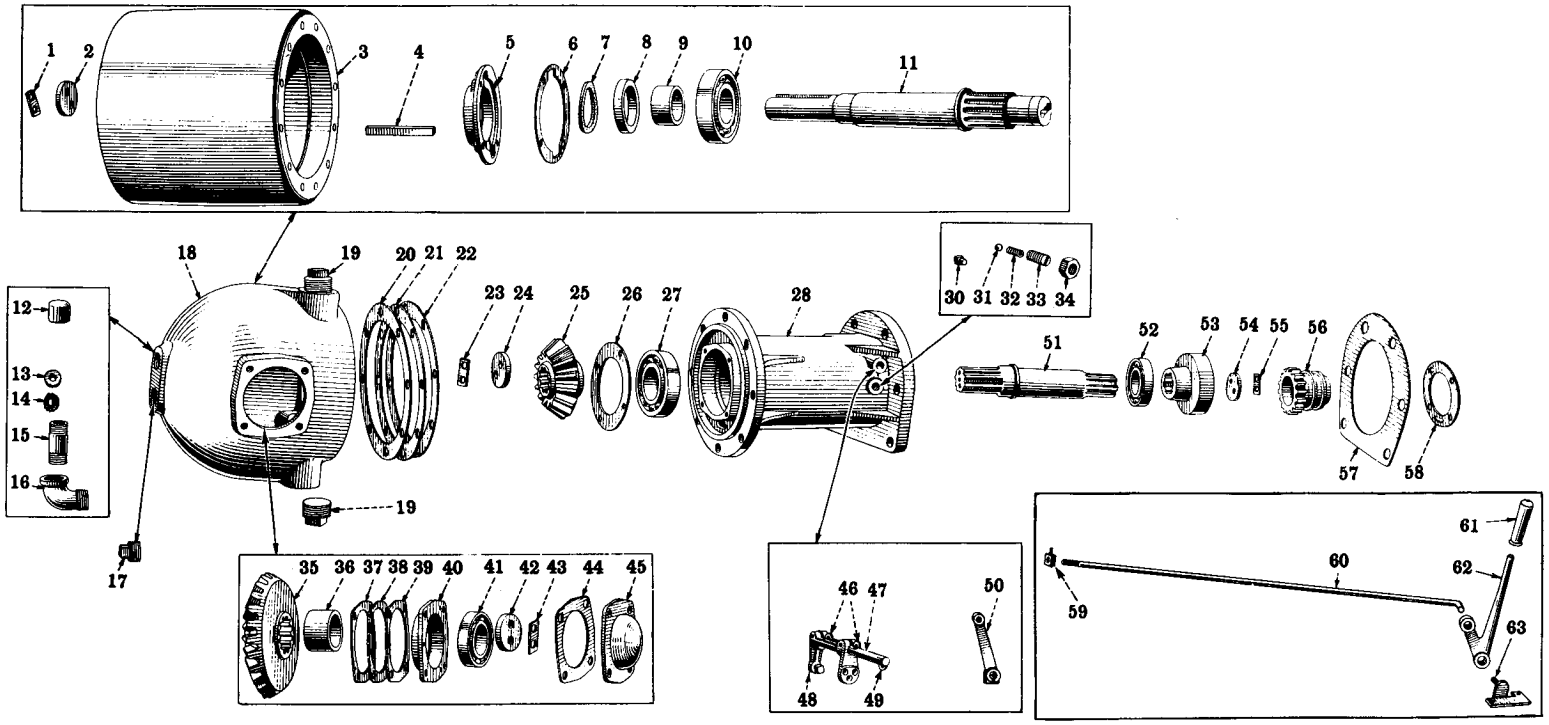

A-10681A

BELT PULLEY (Special)

Reference numbers only are shown in illustration. Use I H part numbers in ordering.
Unnumbered parts in the illustrations are the same as corresponding parts shown with numbers.

ATTACHMENTS

REF. NO.	PART NUMBER	DESCRIPTION	SERIAL NUMBER	NO. REQ'D.
		BELT PULLEY (Special)		
	45 564 DA	Belt Pulley and Power Take-off Attachment		
		(Includes Power Take-off Attachment 45 539 DA)		
		(Tractors not Equipped with Power Take-off)		
		(Field Application only - Order through Regular Service Parts		
		Channels)		1
	45 565 DA	Belt Pulley Attachment (Less Power Take-off		
		Attachment 45 539 DA) (Tractors Equipped with Power Take-off)		
		(Factory Application - Order on Machine Order Form)		
		(Field Application - Order through Regular Service Parts		
		Channels)		1
1	35 089 DA	Belt Pulley Pinion Retainer Washer Bolt Lock		1
2	45 559 D	Belt Pulley Retainer Washer		1
	181 428	Cap Screw, 1/2 x 1-1/8" N.F. Hex Head		6
3	45 563 D	Belt Pulley, 13-1/4" Diameter x 12" Face		1
4	45 549 D	Belt Pulley Key (Same as Q 17)		1
4	Q 17	Belt Pulley Key (Will Work for 45 549 D)		1
5	6 266 DX	Belt Pulley Oil Seal Cage with Oil Seal,		
		45 562 D and Felt Washer, 45 548 D		1
	179 841	Cap Screw, 3/8 x 1-1/4" N.C. Hex Head		4
	103 321	Lock Washer, 3/8"		4
6	45 531 D	Belt Pulley Oil Seal Cage Gasket		1
7	45 548 D	Belt Pulley Oil Seal Felt Washer		1
8	45 562 D	Belt Pulley Oil Seal		1
9	45 536 D	Belt Pulley Bearing Spacer		1
10	ST 221	Belt Pulley Bearing (IH-L-355) (Will Work for 12 797 H)		1
10	12 797 H	Belt Pulley Bearing (N.D. 1311) (Optional with ST 221)		1
11	45 553 D	Belt Pulley Shaft		1
12	108 689	Follows Reference No. 18		
13	27 046 D	Belt Pulley Breather Belt		1
14	27 048 D	Belt Pulley Breather Screen		1
15	27 044 D	Belt Pulley Breather Pipe		1
16	108 687	Follows Reference No. 18		
17	103 870	Follows Reference No. 18		
18	6 270 DX	Belt Pulley Gear Box with Pipe Plugs		1
	103 870	Standard Pipe Plug, 1"		1
19	106 643	Standard Pipe Plug, 1-1/2"		2
	108 689	Standard Pipe Cap, 1"		1
	108 687	Standard Street Ell, 1"		1
20	45 544 D	Belt Pulley Carrier Shim, Heavy		1
21	45 545 D	Belt Pulley Carrier Shim, Medium		1
22	45 546 D	Belt Pulley Carrier Shim, Light		x
23	35 089 DA	Belt Pulley Retainer Washer Bolt Lock		1
24	45 559 D	Belt Pulley Pinion Retainer Washer		1
25	45 550 D	Belt Pulley Pinion, 15 Teeth (Order 258 575 R91)		11
26	45 535 D	Belt Pulley Pinion Shaft Rear Bearing Retainer		1
	179 837	Cap Screw, 3/8 x 3/4" N.C. Hex Head		4
	103 321	Lock Washer, 3/8"		4
27	ST 297	Belt Pulley Pinion Shaft Bearing, Rear (IH-C-355)		
		(Will Work for 77 492 H)		1
27	77 492 H	Belt Pulley Pinion Shaft Bearing, Rear (N.D. 3311)		
		(Optional with ST 297)		1

x - As Required.

ATTACHMENTS

REF. NO.	PART NUMBER	DESCRIPTION	SERIAL NUMBER	NO. REQ'D.
		BELT PULLEY (Special)—Continued		
28	6 269 DCX	Belt Pulley Carrier with 2 Plugs, 103 867 and 103 869		1
	179 931	Cap Screw, 5/8 x 2" N.C. Hex Head		8
	179 950	Cap Screw, 3/4 x 1-3/4" N.C. Hex Head		1
	179 954	Cap Screw, 3/4 x 2-1/2" N.C. Hex Head		6
	220 081	Hex Nut, 3/4" N.C.		1
	103 325	Lock Washer, 5/8"		8
	103 326	Lock Washer, 3/4"		6
30	49 541 DA	Belt Pulley Shifter Pin		2
31	D 2 616	Belt Pulley Shifter Poppet (1/2" Steel Ball)		
		(Will Work for 13 722 D)		1
31	13 722 D	Belt Pulley Shifter Poppet (1/2" Steel Ball)		
		(Will Work for D 2 616)		1
32	64 163 D	Belt Pulley Shifter Poppet Spring (Will Work for 47 823 D)		1
33	49 105 D	Belt Pulley Shifter Poppet Bushing		1
34		Hex Jam Nut, 3/4" N.C.		1
35	45 551 D	Belt Pulley Gear, 24 Teeth (Order 258 575 R91)		1
36	45 534 D	Belt Pulley Gear Spacer		1
37	45 541 D	Belt Pulley Gear Shim, Heavy		1
38	45 542 D	Belt Pulley Gear Shim, Medium		1
39	45 543 D	Belt Pulley Gear Shim, Light		1
40	6 264 D	Belt Pulley Gear Bearing Cage		1
41	ST 278	Belt Pulley Gear Bearing (IH-L-250) (Will Work for 10 690 V)		1
41	10 690 V	Belt Pulley Gear Bearing (ND 1210) (Optional with ST 278)		1
42	45 559 D	Belt Pulley Gear Bearing Retainer Washer		1
43	35 089 DA	Belt Pulley Gear Bearing Washer Bolt Lock		1
44	45 547 D	Belt Pulley Gear Bearing Cap Gasket		1
45	6 263 D	Belt Pulley Gear Bearing Cap		1
	179 885	Cap Screw, 1/2 x 1-1/2" N.C. Hex Head		4
	103 323	Lock Washer, 1/2"		4
46	45 532 DA	Belt Pulley Shifter Fork Key .075" O.D. x 25/64" I.D. x .125"		2
47	61 614 D	Belt Pulley Shifter Shaft		1
48	8 046 DA	Belt Pulley Shifter Fork		1
	181 370	Cap Screw, 3/8 x 1-1/4" N.C. Hex Head		2
	103 321	Lock Washer, 3/8"		2
49	45 532 DA	Belt Pulley Shifter Lever Key		1
50	8 738 D	Belt Pulley Shifter Lever		1
	179 843	Cap Screw, 3/8 x 1-1/2" N.C. Hex Head		1
	103 321	Lock Washer, 3/8"		1
51	45 555 D	Belt Pulley Pinion Shaft		1
52	ST 202	Belt Pulley Pinion Shaft Bearing, Front (IH-C-245)		
		(Will Work for 18 507 D)		1

ATTACHMENTS

REF. NO.	PART NUMBER	DESCRIPTION	SERIAL NUMBER	NO. REQ'D.
		BELT PULLEY (Special)—Continued		
52	18 507 D	Belt Pulley Pinion Shaft Bearing, Front (ND 3209)		
		(Optional with ST 202)		1
53	45 552 D	Belt Pulley Coupling, 16 Teeth		1
54	45 560 D	Belt Pulley Coupling Retainer Washer		1
	181 361	Cap Screw, 3/8 x 7/8" N.F. Hex Head		2
55	45 558 DA	Belt Pulley Coupling Retainer Washer Bolt Lock		1
56	50 614 D	Belt Pulley Shifter Coupling, 16 Teeth		1
57	42 289 D	Belt Pulley Carrier Gasket		1
58	45 538 DX	Power Shaft Bearing Retainer with Stop Pin		1
	179 837	Cap Screw, 3/8 x 3/4" N.C. Hex Head		4
	103 321	Lock Washer, 3/8"		4
59	61 615 D	Belt Pulley Shifter Lever Rod Adjusting Block		1
	103 384	Cotter Pin, 1/8 x 3/4"		1
60	61 753 D	Belt Pulley Shifter Lever Rod		1
	103 028	Hex Nut, 1/2" N.F.		2
	103 384	Cotter Pin, 1/8 x 3/4"		2
61	41 597 DA	Belt Pulley Shifter Hand Lever Handle		
		(One Required when Used with 8 741 DXA)		1
62	8 741 DXA	Belt Pulley Shifter Hand Lever, with Handle 41 597 DA		
		(Optional with 9 636 D)		1
62	9 636 D	Belt Pulley Shifter Hand Lever (One Piece)		
		(Optional with 8 741 DXA)		1
63	58 269 DX	Belt Pulley Shifter Hand Lever Bracket with Pin		1
	179 885	Cap Screw, 1/2 x 1-1/2" N.C. Hex Head		2
	103 323	Lock Washer, 1/2"		2
	103 408	Cotter Pin, 3/16 x 1-1/4"		1
	62 316 D	Belt Pulley (10-1/2" Diameter x 12-1/2" Face)		1
	62 318 D	Belt Pulley (14-3/4" Diameter x 12-1/2" Face)		1
	62 319 D	Belt Pulley (16" Diameter x 12-1/2" Face)		1
	62 320 D	Belt Pulley (17-1/2" Diameter x 12-1/2" Face)		1
	62 321 D	Belt Pulley (17-1/2" Diameter x 12-1/2" Face)		1
	258 575 R91	Belt Pulley Drive Pinion and Gear Service Package		x
	103 867	Belt Pulley Carrier Pipe Plug, 3/8"		1
	103 869	Belt Pulley Carrier Pipe Plug, 3/4"		1

x - As Required.

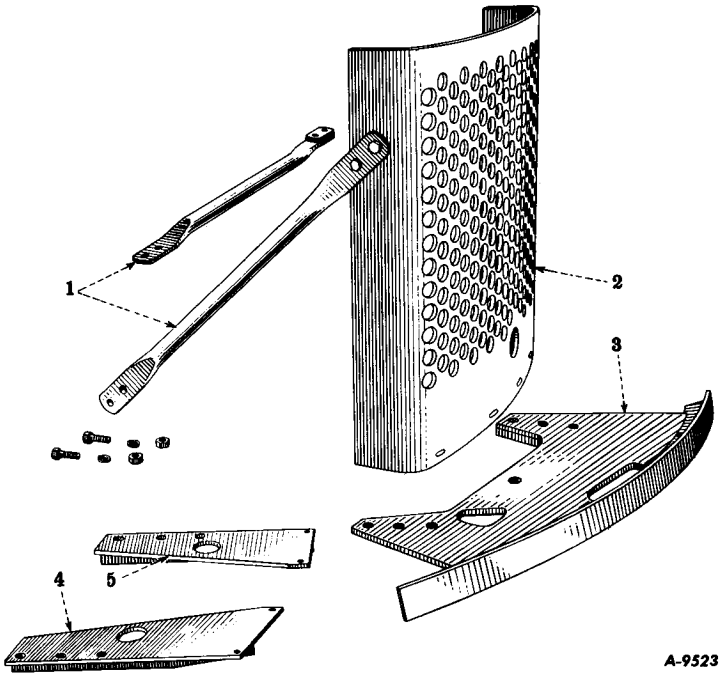

Reference numbers only are shown in illustration. Use I H part numbers in ordering.
Unnumbered parts in the illustrations are the same as corresponding parts shown with numbers.

FRONT BUMPER AND RADIATOR GUARD (Special)

	42 891 DA	Front Bumper Attachment	1
		(Factory Application - Order on Machine Order Form)	
		(Field Application - Order through Regular Service Parts	
		Channels)	
	42 900 D	Radiator Guard Attachment	1
		(Factory Application - Order on Machine Order Form)	
		(Field Application - Order through Regular Service Parts	
		Channels)	
	42 901 DA	Front Bumper and Radiator Guard Attachment	1
		(Factory Application - Order on Machine Order Form)	
		(Field Application - Order through Regular Service Parts	
		Channels)	
1	42 898 DBX	Radiator Guard Brace with Spacer	2
	181 484	Cap Screw, 5/8 x 2" N.F. Hex Head	4
	181 486	Cap Screw, 5/8 x 2-1/2" N.F. Hex Head	4
	103 030	Hex Nut, 5/8" N.F.	8
	103 325	Lock Washer, 5/8"	8
2	42 892 DX	Radiator Guard with Supports	1
	181 431	Cap Screw, 1/2 x 1-1/2" N.F. Hex Head	
		(Used with Front Bumper)	4
	103 323	Lock Washer, 1/2"	4

REF. NO.	PART NUMBER	DESCRIPTION	SERIAL NUMBER	NO. REQ'D
		FRONT BUMPER AND RADIATOR GUARD (Special)—Continued		
3	42 888 DB	Front Bumper with Leg and Gussets		1
	181 533	Cap Screw, 7/8 x 2-1/4" N.F., Hex Head		6
	103 032	Hex Nut, 7/8" N.F.		6
	103 327	Lock Washer, 7/8"		6
	PO 12 898	Washer, 29/32" I.D. x 1-1/2" O.D. x No. 11 Gauge		2
4	42 897 DA	Radiator Guard Support Bracket, Right Hand with Gusset		1
	181 532	Cap Screw, 7/8 x 2" N.F. Hex Head		3
	103 032	Hex Nut, 7/8" N.F.		3
	103 327	Lock Washer, 7/8"		3
	PO 12 898	Washer, 29/32" I.D. x 1-1/2" O.D. x No. 11 Gauge		1
5	42 896 DA	Radiator Guard Support Bracket, Left Hand with Gusset		1
	181 532	Cap Screw, 7/8 x 2" N.F. Hex Head		3
	103 032	Hex Nut, 7/8" N.F.		3
	103 327	Lock Washer, 7/8"		3
	PO 12 898	Washer, 29/32" I.D. x 1-1/2" O.D. x No. 11 Gauge		1

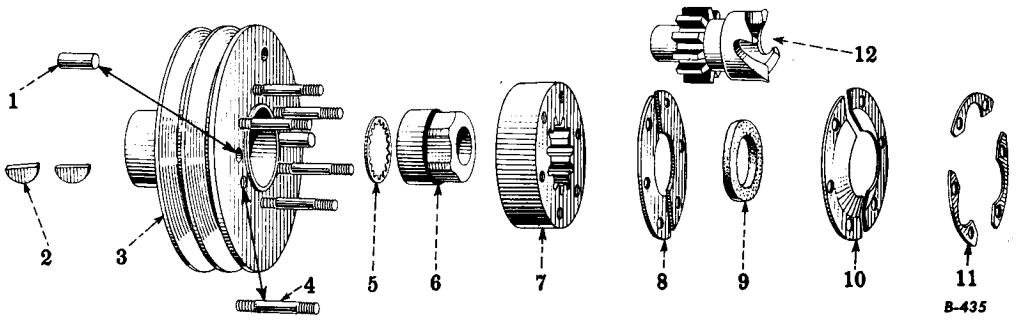

Reference numbers only are shown in illustration. Use I H part numbers in ordering.
Unnumbered parts in the illustrations are the same as corresponding parts shown with numbers.

FRONT POWER TAKE-OFF COUPLING (Special)

	254 474 R91	Front Power Take-off Coupling Attachment	
		(Consists of Reference No.'s 1 to 12 Except Reference No.'s 2	
		and 3 Which are Regular on TD-18-A.)	
		(Factory Application - Order on Machine Order Form)	
		(Field Application - Order Through Regular Service Parts	
		Channels)	
1	47 490 D	Front Power Take-off Drive Pin	2
2	117 994	Fan Drive Pulley Key (Woodruff No. 23)	
		(Standard - Not Part of Attachment, 254 474 R91)	2
3	258 273 R11	Fan Drive Pulley with 2 Pulley Pins, 47 490 D	
		(Standard - Not Part of Attachment, 254 474 R91)	1
4	47 489 D	Front Power Take-off Coupling Stud	6
	103 026	Hex Nut, 3/8" N.F.	6
5	18 767 D	Front Power Take-off Fan Drive Pulley Nut Lock	1
6	6 516 D	Front Power Take-off Fan Drive Pulley Nut	1
7	47 488 D	Front Power Take-off Coupling, 11 Teeth	1
8	47 491 D	Front Power Take-off Shaft Retainer	2
9	47 492 D	Front Power Take-off Shaft Felt Washer	1
10	47 493 D	Front Power Take-off Shaft Felt Washer Retainer	2
11	36 795 DA	Front Power Take-off Coupling Stud Nut Lock	3
12	57 624 D	Front Power Take-off Starting Crank Adapter	1

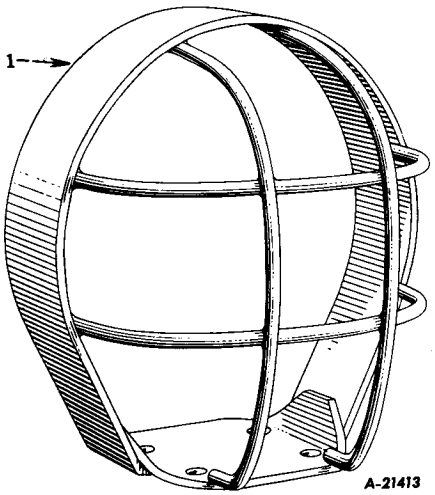

Reference numbers only are shown in illustration. Use I H part numbers in ordering.

HEADLIGHT BRUSH GUARD ATTACHMENT

	258 537 R92	Headlight Brush Guard Attachment	
		(Factory Application - Order on Machine Order Form)	
		(Field Application - Order Through Regular Service Parts	
		Channels)	1
1	254 071 R93	Headlight Brush Guard	2
	179 883	Cap Screw, 1/2 x 1-1/4" N.C. Hex Head	4
	103 323	Lock Washer, 1/2"	4

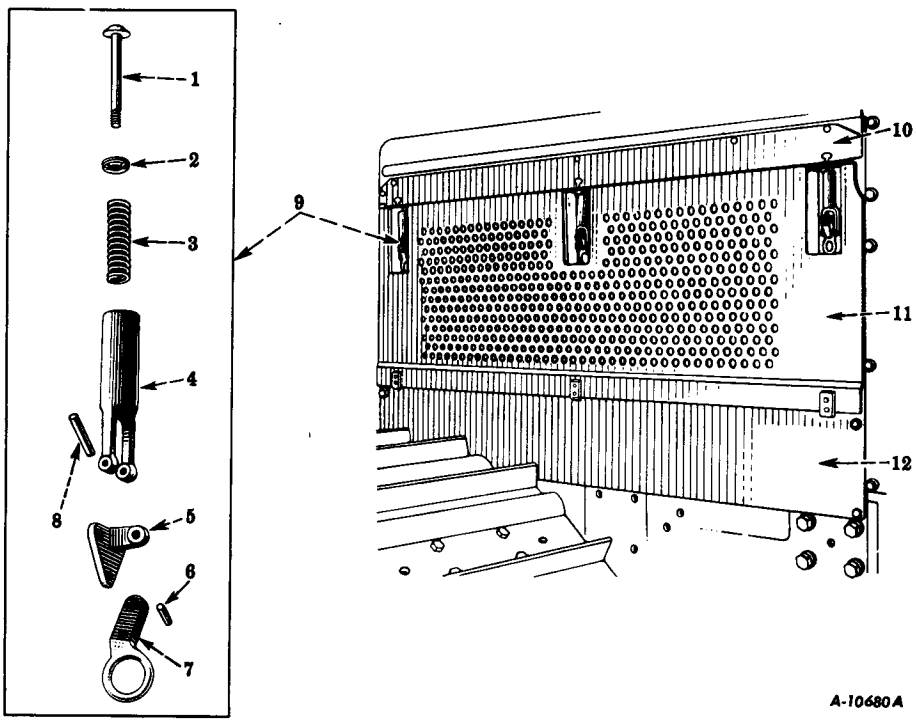

FOREST SHIELD (Special)

Reference numbers only are shown in illustration. Use I H part numbers in ordering. Unnumbered parts in the illustrations are the same as corresponding parts shown with numbers.

ATTACHMENTS

REF. NO.	PART NUMBER	DESCRIPTION	SERIAL NUMBER	NO. REQ'D.
		FOREST SHIELD (Special)		
	63 188 D	Forest Shield Attachment		
		(Factory Application - Order on Machine Order Form)		
		(Field Application - Order Through Regular Service Parts		
		Channels)		1
1	63 187 DA	Hood Fastener Spring Holder		6
	220 065	Hex Nut, 5/16" N.C.		6
2	58 101 D	Hood Fastener Spring Bolt Guide		6
3	64 159 D	Hood Fastener Spring		6
4	8 815 D	Hood Fastener Spring Holder		6
5	8 817 D	Hood Fastener Bracket		6
6	58 103 D	Hood Fastener Toggle Pin		6
		Rivet, 3/16 x 3/4" Round Head		18
7	8 816 D	Hood Fastener Toggle		6
8	G 9 210	Hood Fastener Spring Holder Pin		6
9	63 186 DA	Toggle Hood Fastener, Complete		6
		(Composed of:		
		1 Holder 8 815 D		
		1 Toggle 8 816 D		
		1 Bracket 8 817 D		
		1 Pin G 9 210		
		1 Guide 58 101 D		
		1 Pin 58 103 D		
		1 Bolt 63 187 DA		
		1 Nut 220 065)		
10	63 181 DX	Forest Shield Hood Angle		2
	181 360	Cap Screw, 3/8 x 3/4" N.F. Hex Head		10
	181 374	Cap Screw, 3/8 x 1-1/2" N.F. Hex Head		4
	103 026	Hex Nut, 3/8" N.F.		14
	103 321	Lock Washer, 3/8"		14
	Q 1 505	Washer, 13/32" I.D. x 1" O.D. x No. 16 Gauge		4
11	63 180 DX	Forest Shield Hood Side Door		2
12	63 184 D	Engine Side Sheet, Left Hand		1
12	63 185 D	Engine Side Sheet, Right Hand		1

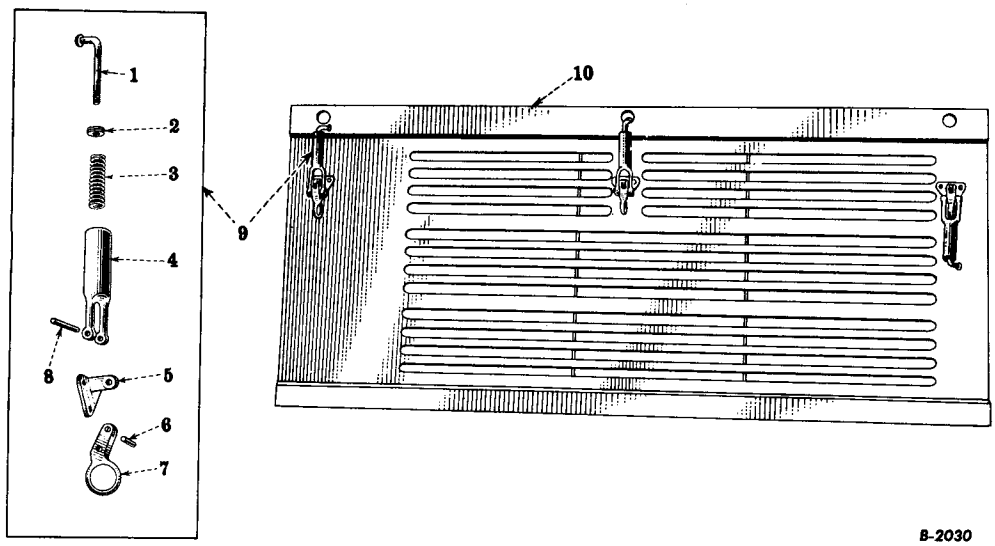

Reference numbers only are shown in illustration. Use I H part numbers in ordering.
Unnumbered parts in the illustrations are the same as corresponding parts shown with numbers.

HOOD SIDE DOORS (Special)

	46 149 D	Hood Side Door Attachment	1
		(Factory Application - Order on Machine Order Form)	
		(Field Application - Order Through Regular Service Parts Channels)	
1	58 099 DA	Hood Fastener Spring Bolt	6
	13 000 R1	Hex Nut, 5/16" N.C.	6
2	58 101 D	Hood Fastener Spring Bolt Guide	6
3	64 159 D	Hood Fastener Spring	6
4	8 815 D	Hood Fastener Spring Holder	6
5	8 817 D	Hood Fastener Bracket	6
		Rivet, 3/16 x 5/8" Round Head	18
6	58 103 D	Hood Fastener Toggle Pin	6
7	8 816 D	Hood Fastener Toggle	6
8	G 9 210	Hood Fastener Spring Holder Pin	6
9	27 159 DB	Hood Side Door Latch, Complete (Optional with 258 222 R92)	
		(Will Work for 27 159 D)	6
		(Composed of:	
		1 Holder 8 815 D	
		1 Toggle 8 816 D	
		1 Bracket 8 817 D	
		1 Bolt 58 099 DA	
		1 Guide 58 101 D	
		1 Pin 58 103 D	
		1 Spring 64 159 D	
		1 Pin G 9 210	
		1 Nut 13 001 R1)	
9	258 222 R92	Hood Side Door Latch (Optional with 27 159 DB)	6
10	46 143 DAX	Hood Side Door, L.H., with 3 Latches, 27 159 DB	1
10	46 144 DAX	Hood Side Door, R.H., with 3 Latches, 27 159 DB	1

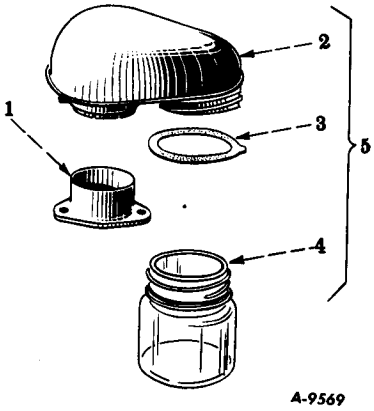

Reference numbers only are shown in illustration. Use I H part numbers in ordering.

REF. NO.	PART NUMBER	MFR'S. NUMBER	DESCRIPTION	SERIAL NUMBER	NO. REQ'D.
			PRE-CLEANER (Special)		
1	59 328 DA		Pre-Cleaner Flange		1
2	59 419 D	X-1595	Collector Pre-Cleaner		1
3	66 776 D	P-3995	Gasket (Will Work for 54 081 D)		1
4	54 082 D	P-2776	Dust Jar		1
5	59 324 D		Pre-Cleaner (Collector Type), Complete		
			(Less Reference No. 1)		
			(Composed of:		
			1 Jar	54 082 D	
			1 Pre-Cleaner	59 419 D	
			1 Gasket	66 776 D)	
5	59 332 D		Pre-Cleaner (Collector Type) Attachment		
			(Factory Application - Order on Machine Order Form)		
			(Field Application - Order Through Regular Service Parts		
			Channels)		1

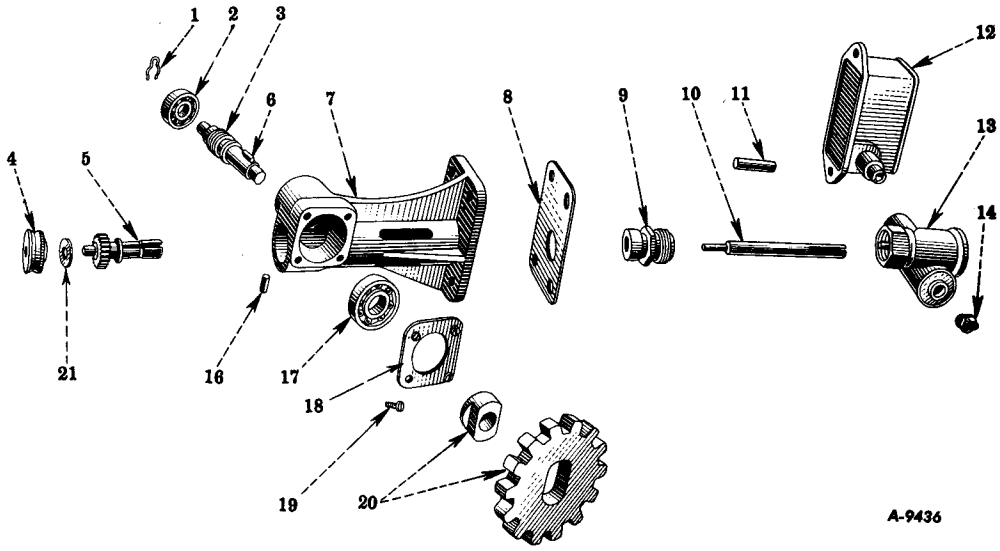

Reference numbers only are shown in illustration. Use I H part numbers in ordering.

ODOMETER DRIVE (Special)
(Stewart-Warner Corporation)

	258 592 R91		Odometer Drive Attachment	
			(Factory Application - Order on Machine Order Form)	
			(Field Application - Order Through Regular Service Parts Channels)	
1	31 180 D		Odometer Drive Gear Shaft Rear Bearing Lock	1
2	26 256 D		Odometer Drive Gear Shaft Rear Ball Bearing (ND 39)	1
3	26 251 D		Odometer Drive Gear Shaft, 1 Tooth	1
	102 645		Hex Slotted Nut, 3/8" N.F.	1
	107 762		Cotter Pin, 3/32 x 5/8"	1
	Q 105		Washer, 25/64" I.D. x 7/8" O.D. x No. 16 Gauge	1
4	37 547 D	96358	Odometer Drive Gear Special Bearing (See Note)	1
5	26 257 D	96213	Odometer Lower Driven Gear and Shaft, R.H., 20 Teeth (See Note)	1
6	106 749		Odometer Drive Gear Hub Key (Woodruff No. 3)	1
7	5 740 DX		Odometer Drive Housing with Gear 37 574 D and Pin 6 403 T	1
	179 837		Cap Screw, 3/8 x 3/4" N.C. Hex Head	4
	103 321		Lock Washer, 3/8"	4

NOTE: All Service and Replacement Parts for Odometer Head should be referred to an authorized Stewart-Warner Service Branch or Service Station.

ATTACHMENTS

REF. NO.	PART NUMBER	MFR'S. NUMBER	DESCRIPTION	SERIAL NUMBER	NO. REQ'D.
			ODOMETER DRIVE (Special)—Continued (Stewart-Warner Corporation)		
8	26 245 D		Odometer Drive Housing Gasket		1
9	26 261 D	20312	Odometer Drive Housing Sleeve (See Note)		1
10	37 575 D	96212	Odometer Drive Shaft Extension (See Note)		1
11	59 239 D		Odometer Support (1/8" Standard Pipe)		2
12	37 599 D	S-776-A	Odometer Head (See Note)		1
	101 150		Screw, No. 12 - 24 x 1-3/4" Round Head		2
	106 498		Lock Washer, No. 12		2
13	59 122 D	104299	Odometer Drive Upper Joint with Coupling Nut (See Note)		1
14	109 462		Odometer Drive Upper Joint Lubricator		1
16	6 403 T		Odometer Drive Housing Sleeve Pin		1
17	ST 260		Odometer Drive Gear Shaft Bearing (IH-C-212) (Optional with 11 294 V)		1
17	11 294 V		Odometer Drive Gear Shaft Front Ball Bearing (ND 3201) (Optional with ST 260)		1
18	26 249 D		Odometer Drive Gear Shaft Front Bearing Retainer		1
19	26 250 D		Odometer Drive Gear Shaft Front Bearing Retainer Screw		4
20	37 577 DX		Odometer Drive Gear, 14 Teeth with Hub, 26 248 D		1
20	26 248 D		Odometer Drive Gear Hub		1
21	26 259 D	843	Odometer Lower Driven Gear and Shaft Thrust Washer (See Note)		1
	42 552 D		Main Frame Cover Gasket		1
	59 236 DX		Main Frame Cover (Will Work for 59 236 D)		1

NOTE: All Service and Replacement Parts for Odometer Head should be referred to an authorized Stewart-Warner Service Branch or Service Station.

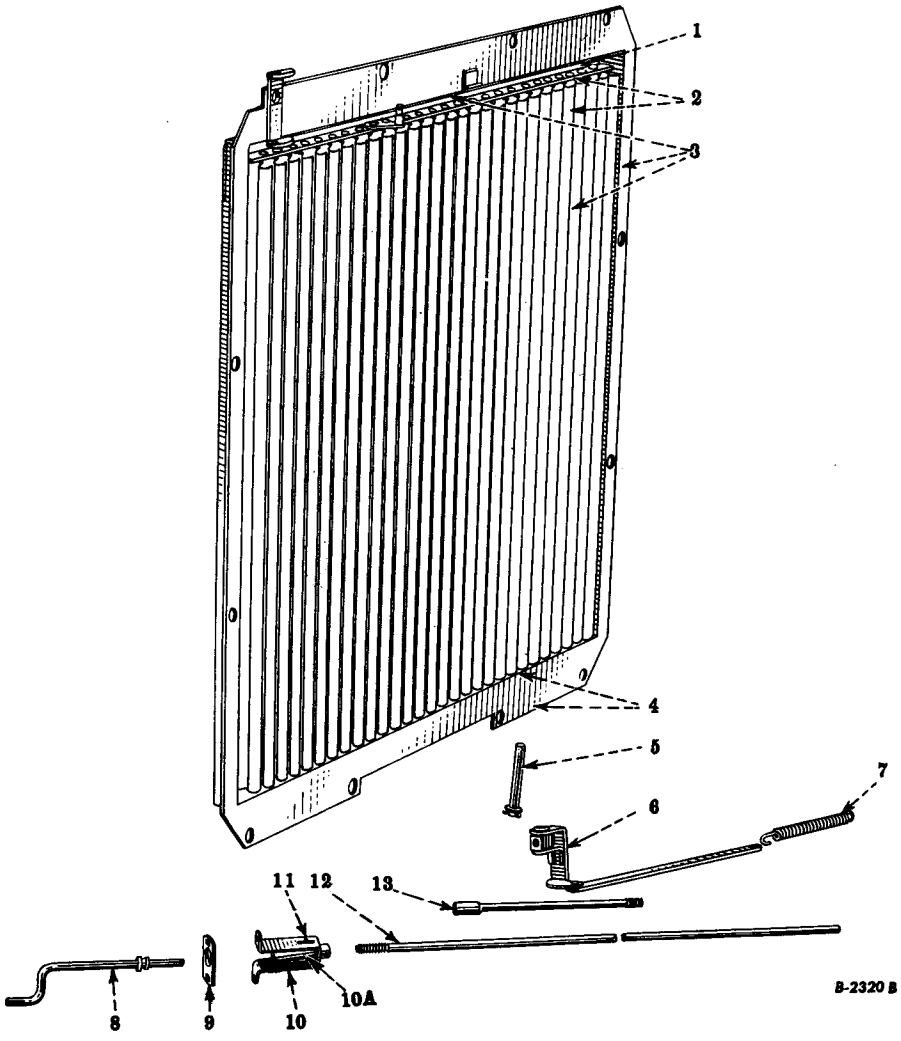

Reference numbers only are shown in illustration. Use I H part numbers in ordering.

RADIATOR SHUTTER AND CONTROLS (Special)

	256 800 R91		Radiator Shutter Attachment (Less Heat	
			(Includes Reference No. 1 to 13) Indicator)	
			(Factory Application - Order on Machine	
			Order Form)	
			(Field Application - Order through Regular	
			Service Parts Channels)	
	42 903 D	15500	Radiator Shutter, Complete	
			(Hardy Manufacturing Corporation)	1
			(Composed of:	
			1 Bar 47 525 D	
			1 Pin 47 526 D	
			1 Link 47 527 D	
			1 Carrier 47 528 D	
			1 Bar 47 529 D	
			1 Spring 47 530 D	
			1 Shutter Unit 47 531 D)	
	179 835		Cap Screw, 3/8 x 5/8" N.C. Hex Head	12
	103 321		Lock Washer, 3/8"	12

ATTACHMENTS

REF. NO.	PART NUMBER	MFR'S. NUMBER	DESCRIPTION	SERIAL NUMBER	NO. REQ'D
			RADIATOR SHUTTER AND CONTROLS (Special)—Continued		
1	47 528 D	15534	Bearing Carrier		1
	187 000		Screw, No. 10 - 32 x 3/8" Round Head		7
	103 088		Hex Nut, No. 10 - 32 N.F.		7
	112 896		Lock Washer, No. 10		7
2	47 529 D	15538	Shutter and Operating Bar		1
3	47 531 D	15501	Shutter Unit, Complete		1
			(Composed of:		
			1 Frame and Bearing Bar	47 525 D	
			1 Carrier	47 528 D	
			1 Shutter and Operating Rod	47 529 D)	
4	47 525 D	15533	Frame and Bearing Bar		1
5	47 526 D	15499	Bell Crank and Operating Link Pin		1
	107 761		Cotter Pin, 1/16 x 5/8"		2
			Washer, 5/16" I.D. x 9/16" O.D. x No. 18 Gauge		1
6	47 527 D	15529	Bell Crank and Operating Link		1
7	47 530 D	15549	Bell Crank and Operating Link Spring		1
8	52 445 D		Radiator Shutter Control Crank with Crank End, 50 759 D and Handle, 52 446 D		1
9	50 763 D		Radiator Shutter Control Crank Spacer		1
10	50 760 D		Radiator Shutter Control Crank Bracket, with Pin, 50 767 D	TDR 22001 to 22875	1
10	50 761 DA		Radiator Shutter Control Crank Bracket	TDR 22876 Up	1
	14 993 R1		Bolt, 1/4 x 3/4" N.C.		2
	220 064		Hex Nut, 1/4" N.C.		2
	103 319		Lock Washer, 1/4"		2
10A	50 762 DA		Radiator Shutter Control Crank Threaded Collar	TDR 22876 Up	1
11	50 767 D		Radiator Shutter Control Crank Threaded Collar Pin	TDR 22001 to 22875	1
12	50 764 D		Radiator Shutter Control Rod, Rear		1
	218 438		Hex Nut, 3/8" N.C.		1
13	58 402 DX		Radiator Shutter Control Rod Front with Coupling		1
	103 384		Cotter Pin, 1/8 x 3/4"		1
	50 759 D		Radiator Shutter Control Crank End		1
	52 446 D		Radiator Shutter Control Crank Handle		1

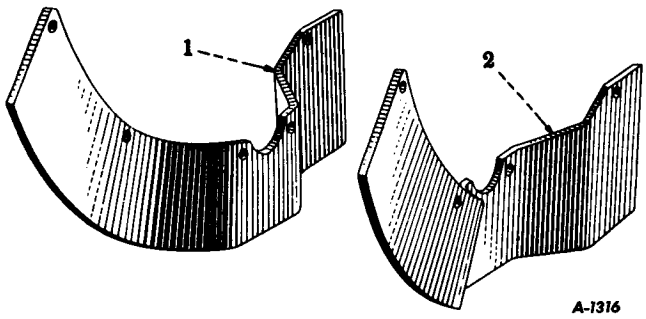

Reference numbers only are shown in illustration. Use I H part numbers in ordering.

SPROCKET ROCK DEFLECTOR (Special)

	42 858 D	Sprocket Rock Deflector Attachment	
		(Factory Application - Order on Machine Order Form)	
		(Field Application - Order through Regular Service Parts	
		Channels)	
1	41 896 DA	Sprocket Rock Deflector, L.H.	1
	181 440	Cap Screw, 1/2 x 2-1/2" N.F., Hex Head	2
	181 436	Cap Screw, 1/2 x 2-1/4" N.F. Hex Head	3
	103 028	Hex Nut, 1/2"	5
	103 323	Lock Washer, 1/2"	5
2	41 897 DA	Sprocket Rock Deflector, R.H.	1
	181 436	Cap Screw, 1/2 x 2-1/4" N.F. Hex Head	3
	181 440	Cap Screw, 1/2 x 2-1/2" N.F., Hex Head	2
	103 028	Hex Nut, 1/2"	5
	103 323	Lock Washer, 1/2"	5

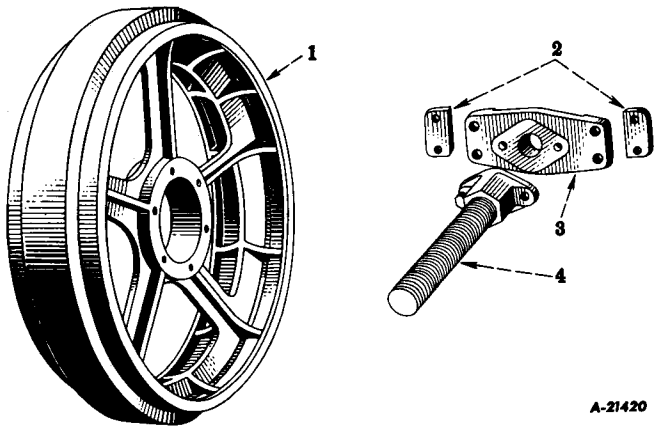

Reference numbers only are shown in illustration. Use I H part numbers in ordering.

LARGE DIAMETER HEAVY FRONT IDLER (Special)

	62 490 D	Large Diameter Front Idler Attachment		
		(Factory Application - Order on Machine Order Form)		
1	9 162 D	Front Idler		2
2	61 192 D	Front Idler Guide Spacer		4
3	5 873 D	Front Idler Guide Cross Plate		2
	179 957	Cap Screw, 3/4 x 3-1/4" N.C. Hex Head		8
	103 326	Lock Washer, 3/4"		8
4	62 497 D	Front Idler Adjuster		2
	65 124 DA	Track, Complete (3 Sections - 2 Sections of 13 Links, 1 Section of		
		12 Links) (See Track Chain)		2
		(Composed of:		
		38 Link	40 976 DC	
		35 Link	40 977 DC	
		3 Link	40 978 DC	
		3 Pin	40 979 D	
		3 Lock Wire	40 980 DB	
		38 Bushing	40 981 D	
		35 Pin	40 982 DA)	

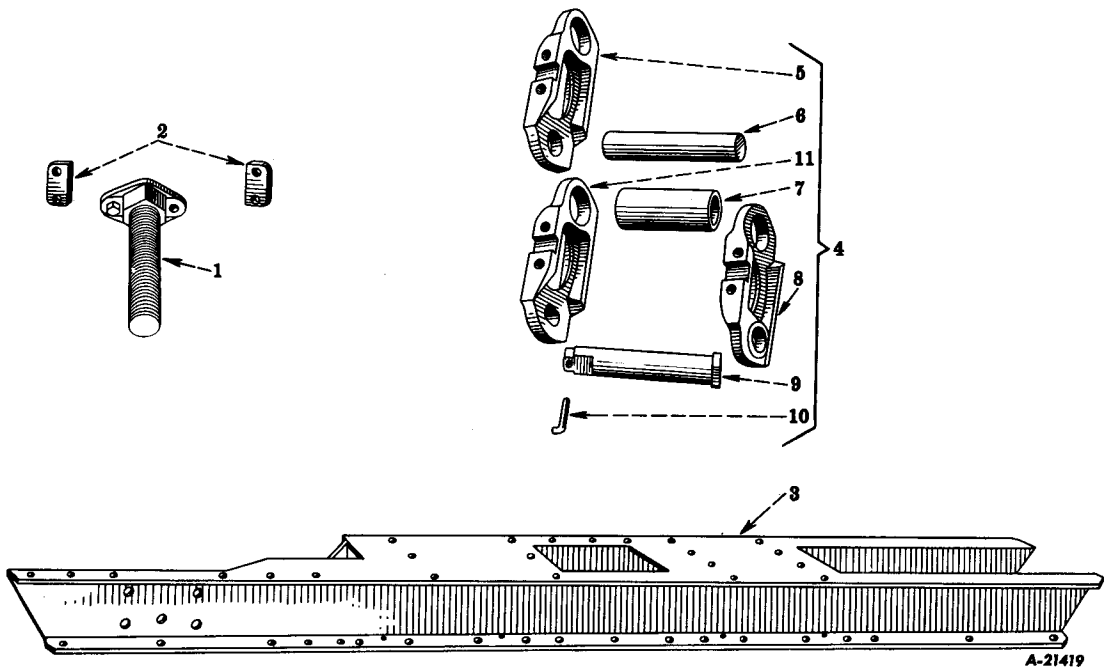

Reference numbers only are shown in illustration. Use I H part numbers in ordering.

EXTENDED TRACK FRAME (Special)

	259 584 R91	Extended Track Frame Attachment		
		(Factory Application only - Order on Machine Order Form)		1
1	61 191 DA	Front Idler Adjusting Rod		2
2	61 192 D	Front Idler Guide Spacer		4
3	61 177 DC	Track Frame, L.H.		1
3	61 178 DC	Track Frame, R.H.		1
4	65 118 DA	Track (Less Shoes)		2
		(Composed of:		
		40 Link	40 976 DC	
		37 Link	40 977 DC	
		3 Link	40 978 DC	
		3 Pin	40 979 D	
		3 Lock Wire	40 980 DB	
		40 Bushing	40 981 D	
		37 Pin	40 982 DA)	

REF. NO.	PART NUMBER	DESCRIPTION	SERIAL NUMBER	NO. REQ'D.
		EXTENDED TRACK FRAME (Special)—Continued		
5	40 977 DC	Track Link, R.H.		74
6	40 982 DA	Track Link Pin (1.621/1.625 Diameter x 8-11/16")		74
7	40 981 D	Track Link Bushing (1.630/1.642 I.D. x 2.362/2.366 O.D. x 5-31/32")		80
8	40 976 DC	Track Link, L.H.		80
9	40 979 DA	Track Master Link Pin (1.6095/1.6110 Diameter x 9" Long)		6
10	40 980 DB	Track Master Link Pin Lockwire		6
11	40 978 DC	Track Master Link		6
	5 735 D	Track Roller Shaft Bracket, Inner (See Track Roller)	TDR 22001 to 23865	2
	181 480	Cap Screw, 5/8 x 1-1/2" N.F. Hex Head		4
	103 325	Lock Washer, 5/8"		4
	8 367 D	Track Roller Bracket, Outer (See Track Roller)	TDR 22001 to 23865	2
	181 485	Cap Screw, 5/8 x 2-1/4" N.F. Hex Head		4
	103 320	Hex Nut, 5/8" N.F.		4
	103 325	Lock Washer, 5/8"		4
	9 162 D	Front Idler (See Large Diameter Heavy Front Idler Attachment)		2
	56 133 D	Track Roller, Complete (Order 261 127 R91) (See Track Roller)	TDR 22001 to 23865	2
	261 125 R92	Track Roller and Shaft, Complete (See Track Roller)	TDR 23866 Up	2
	251 976 R1	Track Roller Oil Seal Sealing Ring	TDR 23866 Up	4
	257 330 R91	Track Roller Oil Seal, 251 975 R91 with Ring, 251 976 R1	TDR 23866 Up	4
	260 990 R1	Track Roller Shaft Bracket (Inner and Outer) (See Track Roller)	TDR 23866 Up	4
	181 480	Cap Screw, 5/8 x 1-1/2" N.F. Hex Head		8
	103 325	Lock Washer, 5/8"		8

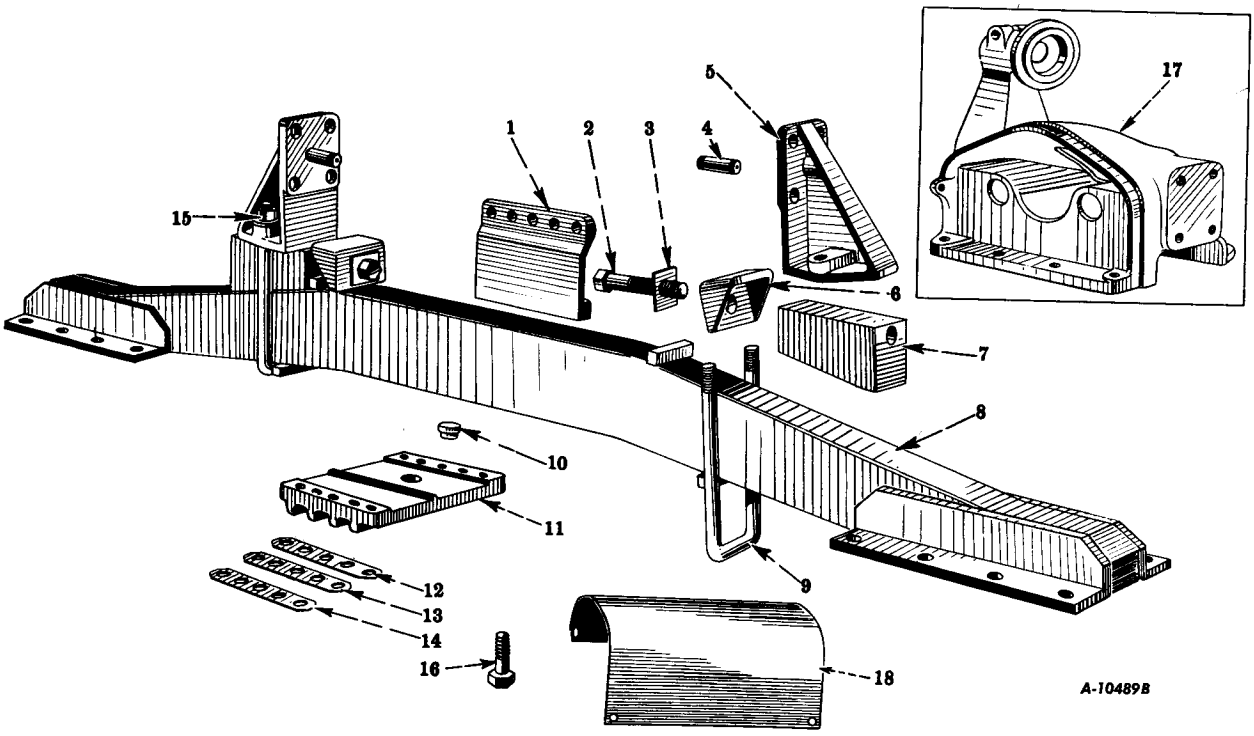

Reference numbers only are shown in illustration. Use I H part numbers in ordering.
Unnumbered parts in the illustrations are the same as corresponding parts shown with numbers.

RIGID TRACK FRAME (Wide Tread—Special)

	59 566 D	Rigid **Track** Frame Attachment	1
		(Factory Application - Order on Machine Order Form)	
		(Field Application - Order through Regular Service Parts	
		Channels)	
1	8 981 D	Rigid Track Frame Crossbar Clamp Support	1
	179 975	Cap Screw, 7/8 x 2-1/2" N.C. Hex Head	3
	103 327	Lock Washer, 7/8"	3
2	59 550 D	Rigid Track Frame Crossbar Wedge Bolt	2
	Q 1 568	Washer, 1-1/2" O.D. x 1-3/32" I.D. x No. 9 Gauge	2
3	59 551 D	Rigid Track Frame Crossbar Wedge Bolt Lock	2
4	59 563 D	Rigid Track Frame Crossbar Bracket Dowel	4
5	8 984 D	Rigid Track Frame Crossbar Bracket, L.H.	1
5	8 895 D	Rigid Track Frame Crossbar Bracket, R.H.	1
6	8 969 D	Rigid Track Frame Crossbar Wedge Clamp	2
7	59 565 D	Rigid Track Frame Crossbar Wedge	2
8	59 553 DX	Rigid Track Frame Crossbar	1
9	59 564 D	Rigid Track Frame Crossbar Bracket "U" Bolt	2

ATTACHMENTS

REF. NO	PART NUMBER	DESCRIPTION	SERIAL NUMBER	NO. REQ'D.
		RIGID TRACK FRAME (Wide Tread—Special)—Continued		
10	59 556 D	Rigid Track Frame Crossbar Dowel		1
11	8 980 D	Rigid Track Frame Crossbar Clamp		1
	179 975	Cap Screw, 7/8 x 2-1/2" N.C. Hex Head		6
	103 327	Lock Washer, 7/8"		6
12	59 560 D	Rigid Track Frame Crossbar Clamp, Shim, Medium		4
13	59 559 D	Rigid Track Frame Crossbar Clamp, Shim, Heavy		2
14	59 558 D	Rigid Track Frame Crossbar Clamp, Shim, Extra Heavy		2
15	41 442 D	Rigid Track Frame Crossbar Bracket "U" Bolt Nut		4
	121 326	Lock Washer, 1"		4
16	59 557 D	Rigid Track Frame Crossbar Clamp Dowel Bolt		4
16	59 557 D	Rigid Track Frame Crossbar Clamp Support Dowel Bolt		2
	103 327	Lock Washer, 7/8"		6
17	8 982 DX	Track Idler Support, Front, L.H. with 7 Corks		1
	181 520	Cap Screw, 3/4 x 4-1/4" N.F. Hex Head		1
	181 534	Cap Screw, 7/8 x 2-1/2" N.F. Hex Head		8
	103 031	Hex Nut, 3/4"		1
	103 326	Lock Washer, 3/4"		1
	103 327	Lock Washer, 7/8"		8
17	8 983 DX	Track Idler Support, Front, R.H. with 7 Corks		1
	181 520	Cap Screw, 3/4 x 4-1/4" N.F. Hex Head		1
	181 534	Cap Screw, 7/8 x 2-1/2" N.F. Hex Head		8
	103 031	Hex Nut, 3/4"		1
	103 326	Lock Washer, 3/4"		1
	103 327	Lock Washer, 7/8"		8
18	59 561 D	Track Spring Guard, L.H.		1
18	59 562 D	Track Spring Guard, R.H.		1

HEAVY DUTY TRACK ROLLER SHIELD (Special)

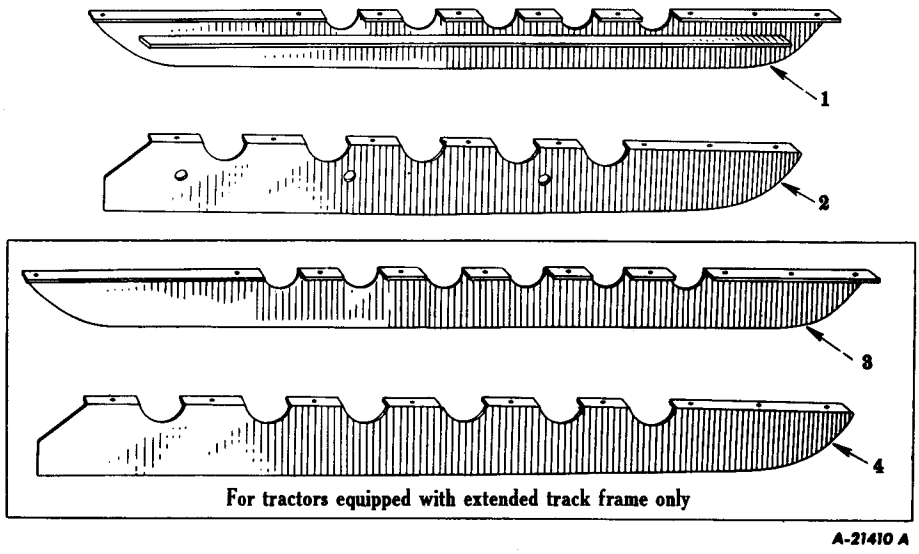

Reference numbers only are shown in illustration. Use I H part numbers in ordering.

REF. NO.	PART NUMBER	DESCRIPTION	SERIAL NUMBER	YEARS USED
		HEAVY DUTY TRACK ROLLER SHIELD (Special)		
	46 680 D	Heavy Duty Track Roller Shield Attachment (Consists of Ref. Nos. 1 and 2)		1
		(Factory Application - Order on Machine Order Form)		
		(Field Application - Order Through Regular Service Parts Channels)		
	260 905 R91	Track Roller Shield Attachment (For Use With Extended Track Frame)		
		(Consists of Ref. Nos. 3 and 4)		1
		(Factory Application - Order on Machine Order Form)		
		(Field Application - Order Through Regular Service Parts Channels)		
1	46 683 DAX	Heavy Duty Track Roller Shield, Outer, L.H.		1
	181 484	Cap Screw, 5/8 x 2" N.F. Hex Head		12
	103 030	Hex Nut, 5/8"		12
	103 325	Lock Washer, 5/8"		12
1	46 684 DAX	Heavy Duty Track Roller Shield, Outer, R.H.		1
	181 484	Cap Screw, 5/8 x 2" N.F. Hex Head		12
	103 030	Hex Nut, 5/8"		12
	103 325	Lock Washer, 5/8"		12
2	46 681 DAX	Heavy Duty Track Roller Shield, Inner, L.H.		1
	181 484	Cap Screw, 5/8 x 2" N.F. Hex Head		8
	103 030	Hex Nut, 5/8"		8
	103 325	Lock Washer, 5/8"		8
2	46 682 DAX	Heavy Duty Track Roller Shield, Inner, R.H.		1
	181 484	Cap Screw, 5/8 x 2" N.F. Hex Head		8
	103 030	Hex Nut, 5/8"		8
	103 325	Lock Washer, 5/8"		8
3	61 193 DA	Track Roller Shield, Outer, L.H.		1
	181 477	Cap Screw, 5/8 x 1-1/4" N.F. Hex Head		13
	103 325	Lock Washer, 5/8"		13
3	61 194 DA	Track Roller Shield, Outer, R.H.		1
	181 477	Cap Screw, 5/8 x 1-1/4" N.F. Hex Head		13
	103 325	Lock Washer, 5/8"		13
4	61 195 DA	Track Roller Shield, Inner, L.H.		1
	181 477	Cap Screw, 5/8 x 1-1/4" N.F. Hex Head		9
	103 325	Lock Washer, 5/8"		9
4	61 196 DA	Track Roller Shield, Inner, R.H.		1
	181 477	Cap Screw, 5/8 x 1-1/4" N.F. Hex Head		9
	103 325	Lock Washer, 5/8"		9

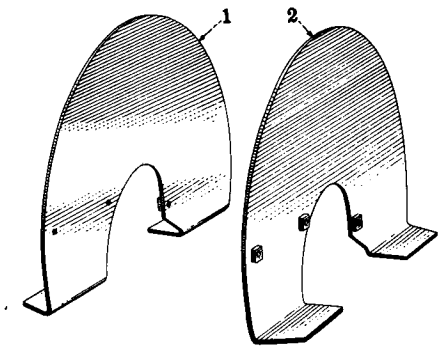

A-1081

Reference numbers only are shown in illustration. Use I H part numbers in ordering.

FRONT IDLER SHIELD (Special)

	42 876 D	Front Idler Shield Attachment	1
		(Factory Application - Order on Machine Order Form)	
		(Field Application - Order through Regular Service Parts	
		Channels)	
1	42 874 DX	Front Idler Shield, L.H., Outer with Tapping Blocks	1
1	42 874 DX	Front Idler Shield, R.H., Inner with Tapping Blocks	1
	181 434	Cap Screw, 1/2 x 1-7/8" N.F., Hex Head	6
	103 323	Lock Washer, 1/2"	6
2	42 875 DX	Front Idler Shield, R.H., Outer with Tapping Blocks	1
2	42 875 DX	Front Idler Shield, L.H., Inner with Tapping Blocks	1
	181 434	Cap Screw, 1/2 x 1-7/8" N.F., Hex Head	6
	103 323	Lock Washer, 1/2"	6

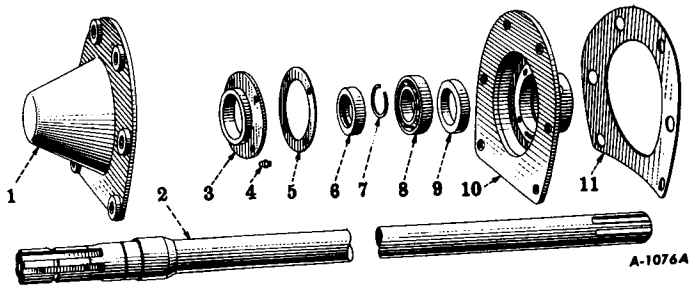

Reference numbers only are shown in illustration. Use I H part numbers in ordering.

POWER TAKE-OFF—REAR (Special)

	45 539 DA	Power Take-off Attachment	
		(Factory Application - Order on Machine Order Form)	
		(Field Application - Order through Regular Service Parts	
		Channels)	
1	6 277 D	Power Take-off Shaft End Cover (Not Belt Pulley)	1
	179 952	Cap Screw, 3/4 x 2" N.C. Hex Head	6
	103 326	Lock Washer, 3/4"	6
2	50 613 DA	Power Take-off Shaft (1-3/4" O.D. Spline)	1
3	6 276 DX	Power Take-off Shaft Bearing Oil Seal Cage with Oil Seal,	
		45 619 D (Not Belt Pulley)	1
	179 838	Cap Screw, 3/8 x 7/8" N.C. Hex Head	4
	103 321	Lock Washer, 3/8"	4
4	Q 3 615	Power Take-off Shaft Bearing Grease Fitting	
		(Not Belt Pulley)	1
5	45 620 D	Power Take-off Shaft Bearing Oil Seal Cage Gasket	
		(Not Belt Pulley)	1
6	45 619 D	Power Take-off Shaft Bearing Oil Seal, Outer	
		(Not Belt Pulley)	1
7	45 537 D	Power Take-off Shaft Bearing Retainer Snap Ring	1
8	ST 202	Power Take-off Shaft Bearing (IH-C-245)	
		(Will Work for 18 507 D)	1
8	18 507 D	Power Take-off Shaft Bearing (New Departure, 3209)	
		(Optional with ST 202)	1
9	45 561 D	Power Take-off Shaft Oil Seal, Inner	1
10	6 268 DX	Power Take-off Shaft Bearing Cage with Oil Seal, 45 561 D	1
11	42 289 D	Power Take-off Shaft Bearing Cage Gasket	1

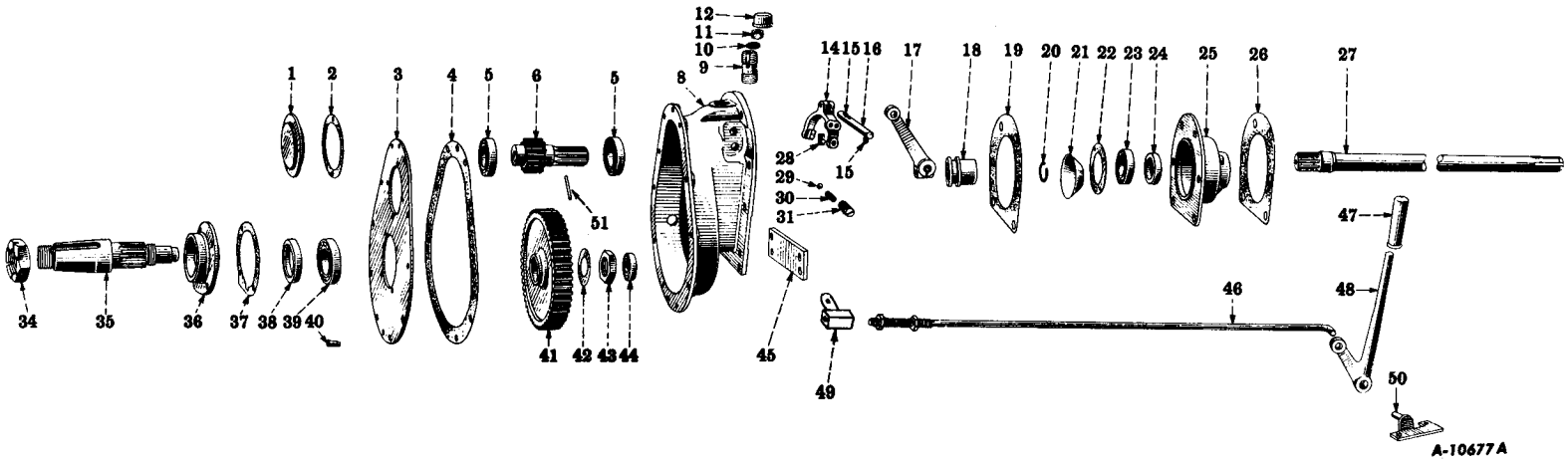

REDUCED SPEED POWER TAKE-OFF—REAR (Special)

Reference numbers only are shown in illustration. Use I H part numbers in ordering.
Unnumbered parts in the illustrations are the same as corresponding parts shown with numbers.

ATTACHMENTS

REF. NO.	PART NUMBER	DESCRIPTION	SERIAL NUMBER	NO. REQ'D.
		REDUCED SPEED POWER TAKE-OFF—REAR (Special)		
	58 265 D	Power Take-off Attachment (338 R.P.M.)		
		(Factory Application - Order on Machine Order Form)		
		(Field Application - Order Through Regular Service Parts		
		Channels)		1
	58 266 D	Power Take-off Attachment (691 R.P.M.)		
		(Factory Application - Order on Machine Order Form)		
		(Field Application - Order Through Regular Service Parts		
		Channels)		1
	58 267 D	Power Take-off Attachment (900 R.P.M.)		
		(Factory Application - Order on Machine Order Form)		
		(Field Application - Order Through Regular Service Parts		
		Channels)		1
1	8 740 D	Power Take-off Pinion Bearing Cage		1
•	181 360	Cap Screw, 3/8 x 3/4" N.F. Hex Head		4
	103 321	Lock Washer, 3/8"		4
2	57 088 D	Power Take-off Pinion Bearing Cage Gasket		1
3	57 084 D	Power Take-off Housing Cover		1
	181 431	Cap Screw, 1/2 x 1-1/2" N.F. Hex Head		10
	103 028	Hex Nut, 1/2" N.F.		10
	103 323	Lock Washer, 1/2"		10
4	57 083 D	Power Take-off Housing Cover Gasket		1
5	ST 278	Power Take-off Pinion Bearing (IH-L-250)		
		(Will Work for 10 690 V)		2
5	10 690 V	Power Take-off Pinion Bearing (New Departure 1 210)		
		(Optional with ST 278)		2
6	57 071 DX	Power Take-off Pinion with Pin, 57 074 D (338 R.P.M.)		1
6	57 072 DX	Power Take-off Pinion with Pin, 57 074 D (691 R.P.M.)		1
6	57 073 DX	Power Take-off Pinion with Pin, 57 074 D (900 R.P.M.)		1
8	8 736 DBX	Power Take-off Housing with 2 Plugs, 103 869		1
	179 950	Cap Screw, 3/4 x 1-3/4" N.C. Hex Head		1
	179 952	Cap Screw, 3/4 x 2" N.C. Hex Head		4
	179 953	Cap Screw, 3/4 x 2-1/4" N.C. Hex Head		4
	220 081	Hex Nut, 3/4" N.C.		1
	103 326	Lock Washer, 3/4"		8
9	27 044 D	Power Take-off Breather Pipe		1
10	27 048 D	Power Take-off Breather Screen		1
11	27 046 D	Power Take-off Breather Felt		1
12	108 689	Standard Pipe Cap 1"		1
14	8 737 DA	Power Take-off Shifter Fork		1
	181 370	Cap Screw, 3/8 x 1-1/4" N.C. Hex Head		1
	103 321	Lock Washer, 3/8"		1
15	45 532 DA	Power Take-off Shifter Shaft Key		2
16	57 076 DA	Power Take-off Shifter Shaft		1
17	8 738 D	Power Take-off Shifter Lever		1
	179 843	Cap Screw, 3/8 x 1-1/2" N.C. Hex Head		1
	103 321	Lock Washer, 3/8"		1

ATTACHMENTS

REF. NO.	PART NUMBER	DESCRIPTION	SERIAL NUMBER	NO. REQ'D.
		REDUCED SPEED POWER TAKE-OFF—REAR (Special)—Continued		
18	57 075 DB	Power Take-off Shifter Coupling		1
19	42 289 D	Power Take-off Housing Gasket		1
20	45 537 D	Power Take-off Shaft Bearing Retainer Snap Ring		1
21	57 070 D	Power Take-off Shaft Oil Slinger		1
22	45 538 D	Power Take-off Shaft Bearing Cage Retainer		1
	179 838	Cap Screw, 3/8 x 7/8" N.C. Hex Head		4
	103 321	Lock Washer, 3/8"		4
23	ST 202	Power Take-off Shaft Bearing (IH-C-245)		
		(Will Work for 18 507 D)		1
23	18 507 D	Power Take-off Shaft Bearing (New Departure 3 209)		
		(Optional with ST 202)		1
24	45 561 D	Power Take-off Shaft Oil Seal - Inner		1
25	8 735 DX	Power Take-off Shaft Bearing Cage with Oil Seal, 45 561 D		1
26	42 289 D	Power Take-off Shaft Bearing Cage Gasket		1
27	57 069 DB	Power Take-off Shaft		1
28	49 541 DA	Power Take-off Shifter Pin		2
29	13 722 D	Power Take-off Shifter Poppet (1/2" Steel Ball)		
		(Will Work for D-2616)		1
29	D 2 616	Power Take-off Shifter Poppet (1/2" Steel Ball)		
		(Optional with 13 722 D) (Will Work for 29 366 H)		1
30	64 163 D	Power Take-off Poppet Spring		1
31	49 105 D	Power Take-off Shifter Poppet Bushing		1
	218 443	Hex Jam Nut, 3/4" N.C.		1
34	57 086 D	Power Take-off Gear Shaft Nut		1
		Cotter Pin, 3/16 x 3"		1
35	57 080 D	Power Take-off Gear Shaft		1
36	8 739 D	Power Take-off Gear Shaft Outer Bearing Cage		1
	181 360	Cap Screw, 3/8 x 3/4" N.F. Hex Head		4
	103 321	Lock Washer, 3/8"		4
37	57 087 D	Power Take-off Gear Shaft Outer Bearing Cage Gasket		1
38	57 085 D	Power Take-off Gear Shaft Outer Bearing Oil Seal		1
39	ST 265	Power Take-off Gear Shaft Bearing (IH-GPC-255)		
		(Will Work for 21 599 D)		1
39	21 599 D	Power Take-off Gear Shaft Bearing (New Departure 3 211)		
		(Optional with ST 265)		1
40	46 749 D	Power Take-off Housing Cover Dowel, Pin		2
41	57 077 D	Power Take-off Gear, 52 Teeth (338 R.P.M.)		1
41	57 078 D	Power Take-off Gear, 43 Teeth (691 R.P.M.)		1
41	57 079 D	Power Take-off Gear, 39 Teeth (900 R.P.M.)		1
42	57 081 D	Power Take-off Gear Clamp Nut Lock		1
43	57 082 D	Power Take-off Gear Clamp Nut		1

ATTACHMENTS

REF. NO.	PART NUMBER	DESCRIPTION	SERIAL NUMBER	NO. REQ'D.
		REDUCED SPEED POWER TAKE-OFF—REAR (Special)—Continued		
44	ST 213	Power Take-off Shaft Bearing, Inner (IH-C-230)		
		(Will Work for 23 874 D)		1
44	23 874 D	Power Take-off Gear Shaft Bearing, Inner (New Departure No. 3206)		
		(Optional with ST 213)		1
45	57 089 D	Power Take-off Housing Spacer		1
46	61 753 D	Power Take-off Shifter Lever Rod		1
	103 028	Hex Nut, 1/2" N.F. "B" Type		2
	108 630	Cotter Pin, 1/8 x 7-1/8"		1
47	41 597 DA	Power Take-off Shifter Hand Lever Handle		
		(One Required When 8 741 DXA is Used)		1
48	8 741 DXA	Power Take-off Shifter Hand Lever with Handle, 41 597 DA		
		(Optional with 9 636 D)		1
48	9 636 D	Power Take-off Shifter Hand Lever (One Piece)		
		(Optional with 8 741 DXA)		1
49	61 615 D	Power Take-off Shifter Lever Rod Adjusting Block		1
	103 384	Cotter Pin, 1/8 x 3/4"		1
50	58 269 DX	Power Take-off Shifter Hand Lever Bracket with Pin		1
	179 885	Cap Screw, 1/2 x 1-1/2" N.C. Hex Head		2
	103 323	Lock Washer, 1/2"		2
	103 407	Cotter Pin, 3/16 x 1"		1
51	57 074 D	Power Take-off Shifter Coupling Stop Groove Pin, 3/16 x 1-3/4"		1

EQUIPMENT COMBINATIONS

TRACTOR CRANE (Special) (TD-18A)

PART NUMBER	DESCRIPTION	SERIAL NUMBER	NO. REQ'D
TD-18A-100-0	Tractor Crane Equipment Combination		
	(Replaces Hughes-Keenan #24 Modification)		
	TD-18A, 74-inch Gauge Crawler Tractor		1
42 887 D	Crankcase Guard Attachment (See Note)		1
46 339 D	Exhaust Muffler Attachment (See Note)		1
59 566 D	Rigid Track Frame Attachment (See Note)		1
254 474 R91	Front Power Take-off Coupling Attachment (See Note)		1
255 031 R91	Air Cleaner and Connections Unit (Side Mounted)		1
	(Consists of:		
	1 Air Cleaner Mounting Bracket	46 764 D	
	1 Air Cleaner, Complete (Donaldson		
	10-inch)	251 187 R91	
	(Composed of:		
	1 Body (Donaldson		
	P-7063) 252 985 R91		
	1 Tray (Donaldson		
	P-7073) 252 986 R91		
	1 Oil Cup (Donald-		
	son P-7081) 252 987 R91		
	1 Clamp (Donaldson		
	P-5978 252 988 R91)		
	1 Cylinder Head Breather Tube Hose	251 226 R1	
	2 Cylinder Head Breather Tube Hose Clamp	251 227 R1	
	1 Hood Sheet	255 030 R11	
	2 Air Cleaner Bracket Band	255 991 R1	
	2 Screw, 3/8 x 1" N.C., Slotted		
	Fillister Head	117 307	
	2 Nut, 3/8" N.C., Square Head	105 606	
	2 Lock Washer, 3/8"	103 321	
	1 Air Cleaner Pipe with Flange - Front	257 372 R11	
	1 Cylinder Head Breather Tube with Nut,		
	37 165 D	257 472 R11	
	1 Air Cleaner Pipe Hose	257 493 R2)	
256 298 R91	18" Overlapping Track Shoe Attachment (*) (See Note)		1
259 584 R91	Extended Track Frame Attachment (See Note)		1
261 483 R91	Extended Direct Drive Power Take-off with Disconnecting		
	Clutch Attachment		1
	(Consists of:		
	1 Crane Drive Shifter Poppet	4 596 D	
	1 Power Shaft Bearing Cage with		
	Oil Seal, 45 561 D	6 268 DX	
	1 Crane Drive Shifter Fork	8 046 DA	
	2 Cap Screw, 3/8 x 1-1/4" N.F. Hex Hd.	181 370	
	2 Lock Washer, 3/8"	103 321	
	1 Belt Pulley Shifter Lever	8 738 D	
	1 Cap Screw, 3/8 x 1-1/2" N.C. Hex Hd.	179 843	
	1 Lock Washer, 3/8"	103 321	

(*) 20-inch is the maximum allowable Track Shoe width on this combination.

NOTE: Detail Parts are listed in Standard Parts Section or Attachment Section of this Catalog.

	PART NUMBER	DESCRIPTION	SERIAL NUMBER	NO. REQ'D
		TRACTOR CRANE (Special) (TD-18A)—Continued		
	261 483 R91	Extended Direct Drive Power Take-off with Disconnecting		
		Clutch Attachment - Continued		
		(Consists of: - Continued		
		1 Belt Pulley Shifter Hand Lever,		
		8 741 D with Handle, 41 957 DA		
		(Optional with 9 636 D)	8 741 DXA	
		1 Belt Pulley Shifter Hand Lever		
		(Will work for 8 741 DXA)	9 636 D	
		1 Crane Drive Sprocket Shaft Bearing		
		Retainer, 9 670 D with Plug, 103 868		
		and Oil Seal, 43 722 D or 70 267 D	9 670 DX	
		8 Cap Screw, 5/8 x 2-3/4" N.F. Hex Hd.	181 487	
		8 Hex Nut, 5/8" N.F.	103 030	
		8 Lock Washer, 5/8"	103 325	
		1 Crane Drive Sprocket Shaft Bearing -		
		Rear (Optional with ST 221)	12 797 H	
		1 Crane Drive Sprocket Shaft Bearing -		
		Rear (Will work for 12 797 H)	ST 221	
		1 Crane Drive Sprocket Shaft Bearing -		
		Front (Optional with ST 202)	18 507 D	
		1 Crane Drive Sprocket Shaft Bearing -		
		Front (Will work for 18 507 D)	ST 202	
		1 Power Shaft Bearing		
		(Optional with ST 202)	18 507 D	
		1 Power Shaft Bearing (Will work for		
		18 507 D)	ST 202	
		1 Crane Drive Sprocket Carrier Gasket	42 289 D	
		1 Power Shaft Bearing Cage Gasket	42 289 D	
		2 Crane Drive Shifter Fork Key	45 532 DA	
		1 Crane Drive Shifter Lever Fork Key	45 532 DA	
		1 Power Shaft Bearing Retaining Snap		
		Ring	45 537 D	
		1 Power Shaft Bearing Retainer with		
		Stop Pin	45 538 DX	
		4 Cap Screw, 3/8 x 3/4" N.C. Hex Hd.	179 837	
		4 Lock Washer, 3/8"	103 321	
		1 Crane Drive Sprocket Shaft Coupling	45 552 D	
		2 Crane Drive Sprocket Shaft Coupling		
		Retainer Washer Bolt Lock	45 558 DA	
		2 Crane Drive Sprocket Shaft Coupling		
		Retainer Washer	45 560 D	
		4 Cap Screw, 3/8 x 7/8" N.F. Hex Head	181 361	
		1 Crane Drive Shifter Poppet Bushing	49 105 D	
		1 Hex Nut, 3/8" N.C. Type "D"	114 499	
		2 Crane Drive Shifter Pin	49 541 DA	
		1 Power Shaft with Pin, 187 798	50 613 DAX	
		1 Crane Drive Shifter Coupling	50 614 D	
		1 Belt Pulley Shifter Hand Lever Bracket		
		with Pin	58 269 DX	
		2 Cap Screw, 1/2 x 1-1/2" N.C. Hex Hd.	179 885	
		2 Lock Washer, 1/2"	103 323	
		1 Cotter Pin, 3/16 x 1-1/4"	103 408	
		1 Crane Drive Shifter Shaft	61 614 D	
		1 Belt Pulley Shifter Lever Rod Adjust-		
		ing Block	61 615 D	
		1 Cotter Pin, 1/8 x 3/4"	103 384	

PART NUMBER	DESCRIPTION	SERIAL NUMBER	NO. REQ'D
	TRACTOR CRANE (Special) (TD-18A)—Continued		
261 483 R91	Extended Direct Drive Power Take-off with Disconnecting		
	Clutch Attachment - Continued		
	(Consists of: - Continued		
	1 Belt Pulley Shifter Lever Rod	61 753 D	
	2 Jam Nut, 1/2", Light Hex.	114 496	
	2 Cotter Pin, 1/8 x 3/4"	103 384	
	1 Crane Drive Shifter Poppet Spring	64 163 D	
	1 Crane Drive Sprocket Shaft	67 722 D	
	1 Crane Drive Sprocket Shaft Snap Ring	67 723 D	
	1 Crane Drive Sprocket Shaft Bearing		
	Retainer Gasket	67 724 D	
	1 Crane Drive Sprocket Carrier	257 485 R91	
	(Composed of:		
	1 Crane Drive		
	Carrier §6 269 DC		
	1 Pipe Plug 103 867		
	1 Pipe Plug 103 869		
	1 Street Elbow 141 621)		
	6 Cap Screw, 3/4 x 2-1/2" N.C. Hex		
	Head	179 954	
	6 Lock Washer, 3/4"	103 326	
	8 Cap Screw, 5/8 x 2" N.C. Hex Head	179 931	
	8 Lock Washer, 5/8"	103 325	
	1 Cap Screw, 3/4 x 1-3/4" N.C. Hex		
	Head	179 950	
	1 Hex Nut, 3/4" N.C.	220 081)	
	The Following Additional Attachments Can Also Be Furnished		
	When Ordered to be used with the Above Tractor Crane		
	Equipment Combination:		
42 858 D	Sprocket Rock Deflector Attachment (See Note)		1
42 876 D	Front Idler Shield Attachment (See Note)		1
42 901 DA	Radiator Guard and Front Bumper Attachment (See Note)		1
42 902 D	Front Pull Hook Attachment (See Note)		1
43 043 D	Electric Lighting Attachment (2 Headlights and 1 Rear Light)		
	(See Note)		1
43 045 D	Electric Lighting Attachment (2 Headlights and 1 Tail Light)		
	(See Note)		1
46 970 DA	Cut-Away Sprocket Attachment (See Note)		1
51 185 D	Swivel Front Pull Hook Attachment (See Note)		1
61 903 D	Bi-Metallic Steering Clutch Friction Disc Attachment		
	(See Note)		1
255 009 R92	Blower Fan Attachment (See Note)		1
256 013 R91	Low Boiling Point Thermostat and Heat Indicator Attachment		
	(See Note)		1
256 600 R91	Radiator Shutter Attachment (See Note)		1
258 562 R92	Engine Clutch Bi-Metallic Driven Member Attachment		
	(See Note)		1
261 936 R91	Service Meter Attachment (Will Work for 260 763 R91) (See Note)		1
260 905 R91	Track Roller Shield Attachment (See Note)		1
	The following optional Track Shoe Attachments may be		
	ordered in Lieu of 256 298 R91		
256 294 R91	18" Square Cornered Track Shoe Attachment (*) (See Note)		1
256 295 R91	20" Square Cornered Track Shoe Attachment (*) (See Note)		1
257 755 R91	18" Clipped Corner Track Shoe Attachment (*) (See Note)		1
257 756 R91	20" Clipped Corner Track Shoe Attachment (*) (See Note)		1

§ - Not Supplied Separately.
(*) - 20-inch is the maximum allowable Track Shoe width on this combination.
NOTE: Detail Parts are listed in Standard Parts Section or Attachment Section of this Catalog.

EQUIPMENT COMBINATIONS

PART NUMBER	DESCRIPTION	SERIAL NUMBER	NO. REQ'D
	PIPE BOOM (Special) (TD-18A)		
TD-18A-500-0	Pipe Boom Equipment Combination		
	(Replaces Superior No. 1-B Modification)		
	TD-18A, 74-inch Gauge Crawler Tractor		1
42 887 D	Crankcase Guard Attachment (See Note)		1
42 902 D	Front Pull Hook Attachment (See Note)		1
43 043 D	Electric Lighting Attachment (See Note)		1
46 339 D	Exhaust Muffler Attachment (See Note)		1
50 899 D	Starting Switch to Starting Motor Cable with 1 Terminal,		
	23 431 D and 2 Insulating Tubing, 41 911 D		1
57 148 DA	Battery to Starting Switch Cable with 1 Terminal, 26 376 H and		
	Bolt, 26 453 HX		1
59 566 D	Rigid Track Frame Attachment (See Note)		1
253 983 R1	Main Frame Side Channel, R.H.		1
254 474 R91	Front Power Take-Off Coupling Attachment (See Note)		1
255 031 R91	Air Cleaner and Connections Unit (Side Mounted)		1
	(Consists of:		
	1 Air Cleaner Mounting Bracket	46 764 D	
	1 Air Cleaner, Complete (Donaldson		
	10-Inch).	251 187 R91	
	(Composed of:		
	1 Body (Donaldson		
	P-7063)	252 985 R91	
	1 Tray (Donaldson		
	P-7073)	252 986 R91	
	1 Oil Cup (Donaldson		
	P-7081)	252 987 R91	
	1 Clamp (Donaldson		
	P-5978)	252 988 R91	
	1 Air Cleaner		
	Instructions 1 001 181 R3)		
	1 Cylinder Head Breather Tube Hose	251 226 R1	
	2 Cylinder Head Breather Tube Hose Clamp	251 227 R1	
	1 Hood Sheet	255 030 R11	
	2 Air Cleaner Bracket Band	255 991 R1	
	2 Screw, 3/8 x 1" N.C. Slotted		
	Fillister Head	117 307	
	2 Nut, 3/8" N.C. Square Head	105 606	
	2 Lockwasher, 3/8"	103 321	
	1 Air Cleaner Pipe with Flange - Front	257 372 R11	
	1 Cylinder Head Breather Tube with Nut,		
	37 165 D	257 472 R11	
	1 Air Cleaner Pipe Hose	257 493 R2)	
256 296 R91	22" Square Cornered Track Shoe Attachment (*) (See Note)		1
259 584 R91	Extended Track Frame Attachment		
	(Includes Large Diameter Front Idler) (See Note)		1

(*) 24-inch is the maximum allowable track shoe width on this combination.

NOTE: Detail parts are listed in Standard Parts Section or Attachment Section of this Catalog.

EQUIPMENT COMBINATIONS

PART NUMBER	DESCRIPTION	SERIAL NUMBER	NO. REQ'D
	PIPE BOOM (Special) (TD-18A)—Continued		
	The Following Additional Attachments Can Also Be Furnished When Ordered to be used with the Above Pipe Boom Equipment Combination:		
42 858 D	Sprocket Rock Deflector Attachment (See Note)		1
42 876 D	Front Idler Shield Attachment (See Note)		1
42 901 DA	Radiator Guard and Front Bumper Attachment (See Note)		1
46 970 DA	Cut-Away Sprocket Attachment (See Note)		1
52 418 D	Spark Arrester Attachment (See Note)		1
61 903 D	Bi-Metallic Steering Clutch Friction Disc Attachment (See Note)		1
254 070 R91	Exhaust Extension Attachment (See Note)		1
255 009 R92	Blower Fan Attachment (See Note)		1
256 013 R91	Low Boiling Point Thermostat and Heat Indicator Attachment (See Note)		1
256 600 R91	Radiator Shutter Attachment (See Note)		1
258 537 R92	Headlight Brush Guard Attachment (See Note)		1
258 562 R92	Engine Clutch Bi-Metallic Driven Member Attachment (See Note)		1
260 905 R91	Track Roller Shield Attachment (See Note)		1
	The following optional track shoe attachments may be ordered in lieu of 256 296 R91		
256 295 R91	20" Square Cornered Track Shoe Attachment (*) (See Note)		1
256 297 R91	24" Square Cornered Track Shoe Attachment (*) (See Note)		1
257 756 R91	20" Clipped Corner Track Shoe Attachment (*) (See Note)		1
257 757 R91	22" Clipped Corner Track Shoe Attachment (*) (See Note)		1
257 758 R91	24" Clipped Corner Track Shoe Attachment (*) (See Note)		1

(*) 24-inch is the maximum allowable track shoe width on this combination.

NOTE: Detail parts are listed in Standard Parts Section or Attachment Section of this Catalog.

SUFFIX LETTER CODE

To facilitate the servicing of the Crawler Tractors equipped with special features we have assigned a suffix letter code to the tractor serial number as a means of identification. This code applies to special features that replace standard parts or units only and have not coded Attachments that do not effect replacement of standard parts or units.

(Example: On Tractor TDR-22001T7B; the T7B indicates the Crawler Tractor is a Wide Tread with High Speed Gears and Heavy Duty Track Roller Shield.)

T 1	Gasoline
T 2	Modified
T 3	Kerosene
T 4	U. S. Army
T 4 M	U. S. Marine Corps
T 4 N	U. S. Navy
T 5	5000 ft. Altitude
T 6	Low Speed Gear
T 6 A	" —Heavy Duty Track Roller Shield
T 6 B	— " —Rigid Track Frame
T 6 C	" — " — " —Front Power Take-Off
T 6 D	" — " — " — " —Light. or Starting (Delco-Remy)
T 6 E	" — " — " — " — " (Delco-Remy Heavy Duty)
T 6 F	" — " — " — " —Lighting (Robert Bosch)
T 6 G	" —Rigid Track Frame
T 6 H	" — " —Front Power Take-Off
T 6 J	" — " — " —Lighting or Starting (Delco-Remy)
T 6 K	" — " — " — " (Delco-Remy Heavy Duty)
T 6 L	" — " — " —Lighting (Robert Bosch)
T 6 M	" —Front Power Take-Off
T 6 N	" — " —Lighting or Starting (Delco-Remy)
T 6 P	" — " — " (Delco-Remy Heavy Duty)
T 6 R	" — " —Lighting (Robert Bosch)
T 6 S	" —Light. or Starting (Delco-Remy)
T 6 T	" — " (Delco-Remy Heavy Duty)
T 6 U	" —Lighting (Robert Bosch)
T 7	Wide Tread
T 7 A	" —High Speed Gear
T 7 B	" — " —Heavy Duty Track Roller Shield
T 7 C	" — " — " —Rigid Track Frame
T 7 D	" — " — " — " —Front Power Take-Off
T 7 E	" — " — " — " — " —Light. or Starting (Delco-Remy)
T 7 F	" — " — " — " — " — " (Delco-Remy Heavy Duty)
T 7 G	" — " — " — " — " —Lighting (Robert Bosch)
T 7 H	" — " —Rigid Track Frame
T 7 J	" — " — " —Front Power Take-Off
T 7 K	" — " — " — " —Light. or Starting (Delco-Remy)
T 7 L	" — " — " — " — " (Delco-Remy Heavy Duty)
T 7 M	" — " — " — " —Lighting (Robert Bosch)

T 7 N	Wide Tread	—High Speed Gear	—Front Power Take-Off							
T 7 P	"	—	"	—	"	—Light. or Starting (Delco-Remy)				
T 7 R	"	—	"	—	"	—	"	(Delco-Remy Heavy Duty)		
T 7 S	"	—	"	—	"	—Lighting (Robert Bosch)				
T 7 T	"	—	"	—Light. or Starting (Delco-Remy)						
T 7 U	"	—	"	—	"	(Delco-Remy Heavy Duty)				
T 7 V	"	—	"	—Lighting (Robert Bosch)						
T 7 W	"	—	"	—Heavy Duty Track Roller Shield—Front Power Take-Off—Light. or Starting (Delco-Remy Heavy Duty)						
T 7 X	"	—	"	—Cutaway Sprocket—Light. or Starting (Delco-Remy Heavy Duty)						
T 7 AA	"	—Low Speed Gear								
T 7 AB	"	—	"	—Heavy Duty Track Roller Shield						
T 7 AC	"	—	"	—	"	—Rigid Track Frame				
T 7 AD	"	—	"	—	"	—	"	—Front Power Take-Off		
T 7 AE	"	—	"	—	"	—	"	—	"	—Lighting or Starting (Delco-Remy)
T 7 AF	"	—	"	—	"	—	"	—	"	— " (Delco-Remy Heavy Duty)
T 7 AG	"	—	"	—	"	—	"	—	"	—Lighting (Robert Bosch)
T 7 AH	"	—	"	—Rigid Track Frame						
T 7 AJ	"	—	"	—	"	—Front Power Take-Off				
T 7 AK	"	—	"	—	"	—	"	—Light. or Starting (Delco-Remy)		
T 7 AL	"	—	"	—	"	—	"	—	"	(Delco-Remy Heavy Duty)
T 7 AM	"	—	"	—	"	—	"	—Lighting (Robert Bosch)		
T 7 AN	"	—Low Speed Gear	—Front Power Take-Off							
T 7 AP	"	—	"	—	"	—Light. or Starting (Delco-Remy)				
T 7 AR	"	—	"	—	"	—	"	(Delco-Remy Heavy Duty)		
T 7 AS	"	—	"	—	"	—Lighting (Robert Bosch)				
T 7 AT	"	—	"	—Light or Starting (Delco-Remy)						
T 7 AU	"	—	"	—	"	(Delco-Remy Heavy Duty)				
T 7 AV	"	—	"	—Lighting (Robert Bosch)						
T 7 BA	"	—Heavy Duty Track Roller Shield								
T 7 BC	"	—	"	—Rigid Track Frame						
T 7 BD	"	—	"	—	"	—Front Power Take-Off				
T 7 BE	"	—	"	—	"	—	"	—Light. or Starting (Delco-Remy)		
T 7 BF	"	—	"	—	"	—	"	—	"	(Delco-Remy Heavy Duty)
T 7 BG	"	—	"	—	"	—	"	—Lighting (Robert Bosch)		
T 7 BH	"	—	"	—Front Power Take-Off—Light. or Starting (Delco-Remy Heavy Duty)						
T 7 BHA	"	—	"	—	"	—	"	(Delco-Remy)		
T 7 BHB	"	—	"	—	"	—Heavy Duty Drawbar				
T 7 BJ	"	—	"	—	"	—Cutaway Sprocket—Light. or Starting (Delco-Remy Heavy Duty)				
T 7 BJA	"	—	"	—	"	—	"	—Reverse Flow Fan—Light. or Starting (Delco-Remy Heavy Duty)		
T 7 BK	"	—	"	—	"	—Cutaway Sprocket				
T 7 BKA	"	—	"	—	"	—	"	—Reverse Flow Fan		
T 7 BKB	"	—	"	—	"	—	"	—Heavy Duty Drawbar		
T 7 BKC	"	—	"	—	"	—	"	—Light. or Starting (Delco-Remy)		
T 7 BL	"	—	"	—Light. or Starting (Delco-Remy Heavy Duty)						
T 7 BLA	"	—	"	—	"	(Delco-Remy)				
T 7 BM	"	—	"	—Cutaway Sprocket—Light. or Starting (Delco-Remy Heavy Duty)						
T 7 BMA	"	—	"	—Cutaway Sprocket						
T 7 BMB	"	—	"	—	"	—Light. or Starting (Delco-Remy)				

T 7 BN Wide Tread—Rigid Track Frame
T 7 BP " — " —Front Power Take-Off
T 7 BR " — " — " —Light. or Starting (Delco-Remy)
T 7 BS " — " — " — " (Delco-Remy Heavy Duty)
T 7 BT " — " — " —Lighting (Robert Bosch)
T 7 BU " — " —Extended Track Frame—Heavy Front Idler—Light. or Starting (Delco-Remy)
T 7 BV " — " — " — " — " (Delco-Remy Heavy Duty)
T 7 BW " — " —Heavy Front Idler—Light. or Starting (Delco-Remy Heavy Duty)
T 7 BX " — " —Extended Track Frame

T 7 CA Wide Tread—Front Power Take-Off
T 7 CB " — " —Light. or Starting (Delco-Remy)
T 7 CC " — " — " (Delco-Remy Heavy Duty)
T 7 CD " — " —Lighting (Robert Bosch)
T 7 CE " — " —Cutaway Sprocket—Light. or Starting (Delco-Remy Heavy Duty)
T 7 CEA " — " — " — " (Delco-Remy)
T 7 CF " — " —Heavy Duty Track Roller Shield
T 7 CG " — " —Reverse Flow Fan
T 7 CL " —Lighting or Starting (Delco-Remy)
T 7 CM " — " (Delco-Remy Heavy Duty)
T 7 CMA " — " " " —Reverse Flow Fan
T 7 CN " —Lighting (Robert Bosch)
T 7 CP " —Cutaway Sprocket—Light. or Starting (Delco-Remy Heavy Duty)
T 7 CR " — " — " (Delco-Remy)
T 7 CS " —Front Power Take-Off—Cutaway Sprocket

T 7 DA Wide Tread—Cutaway Sprocket

T 7 EA Wide Tread—Reverse Flow Fan

T 7 FA Wide Tread—Large Diameter Front Idler—Front Power Take-Off—Reverse Flow Fan—Light. or Starting (Delco-Remy)
T 7 FB " — " — " — " — " (Delco-Remy Heavy Duty)

T 7 GA Wide Tread—Extended Track Frame—Lighting (Robert Bosch)

T 7 HA Wide Tread—Heavy Duty Drawbar—Light. or Starting (Delco-Remy Heavy Duty)

T 8 8,000 ft. altitude

T 9 High Speed Gear
T 9 A " —Heavy Duty Track Roller Shield
T 9 B " — " —Rigid Track Frame
T 9 C " — " — " —Front Power Take-Off
T 9 D " — " — " — " —Light. or Starting (Delco-Remy)
T 9 E " — " — " — " — " (Delco-Remy Heavy Duty)
T 9 F " — " — " — " —Lighting (Robert Bosch)
T 9 G " —Rigid Track Frame
T 9 H " — " —Front Power Take-Off
T 9 J " — " — " —Light. or Starting (Delco-Remy)
T 9 K " — " — " — " (Delco-Remy Heavy Duty)
T 9 L " — " — " —Lighting (Robert Bosch)
T 9 M " —Front Power Take-Off
T 9 N " — " —Light. or Starting (Delco-Remy)
T 9 P " — " — " (Delco-Remy Heavy Duty)
T 9 R " — " —Lighting (Robert Bosch)
T 9 S " —Light. or Starting (Delco-Remy)
T 9 T " — " (Delco-Remy Heavy Duty)
T 9 U " —Lighting (Robert Bosch)
T 9 V " —Cutaway Sprocket—Light. or Starting (Delco-Remy Heavy Duty)
T 9 VA " — " — " (Delco-Remy)
T 9 W " — " —Front Power Take-Off—Light. or Starting (Delco-Remy Heavy Duty)
T 9 X " —Heavy Duty Track Roller Shield—Front Power Take-Off—Light. or Starting (Delco-Remy Heavy Duty)
T 9 Y " — " —Light. or Starting (Delco-Remy Heavy Duty)

T 10	10,000 ft. altitude
T 11	Heavy Duty Track Roller Shield
T 11 A	" —Rigid Track Frame
T 11 B	" — " —Front Power Take-Off
T 11 C	" — " — " —Light. or Starting (Delco-Remy)
T 11 D	" — " — " — " (Delco-Remy Heavy Duty)
T 11 E	" — " — " —Lighting (Robert Bosch)
T 11 F	" —Front Power Take-Off—Light. or Starting (Delco-Remy Heavy Duty)
T 11 G	" —Light. or Starting (Delco-Remy Heavy Duty)
T 11 H	" —Front Power Take-Off—Cutaway Sprocket
T 11 J	" — " —Reverse Flow Fan—Light. or Starting (Delco-Remy Heavy Duty)
T 11 K	" —Lighting (Robert Bosch)
T 11 L	" —Front Power Take-Off—Light. or Starting (Delco-Remy)
T 11 M	" —Front Power Take-Off
T 11 N	" — " —Cutaway Sprocket—Light. or Starting (Delco-Remy Heavy Duty)
T 11 P	" — " — " — " (Delco-Remy)
T 11 R	" —Light. or Starting (Delco-Remy)
T 11 S	" —Cutaway Sprocket—Light. or Starting (Delco-Remy Heavy Duty)
T 11 T	" — " —Light. or Starting (Delco-Remy)
T 11 U	" —Cutaway Sprocket
T 12	Rigid Track Frame
T 12 A	" —Front Power Take-Off
T 12 B	" — " —Light. or Starting (Delco-Remy)
T 12 C	" — " — " (Delco-Remy Heavy Duty)
T 12 D	" — " —Lighting (Robert Bosch)
T 13	Front Power Take-Off
T 13 A	" —Light. or Starting (Delco-Remy)
T 13 B	" — " (Delco-Remy Heavy Duty)
T 13 C	" —Lighting (Robert Bosch)
T 13 D	" —Cutaway Sprocket—Light. or Starting (Delco-Remy)
T 13 E	" —Cutaway Sprocket
T 13 F	" — " —Light. or Starting (Delco-Remy Heavy Duty)
T 13 G	" —Reverse Flow Fan
T 14	Lighting or Starting (Delco-Remy)
T 14 A	" (Delco-Remy Heavy Duty)
T 14 B	Lighting (Robert Bosch)
T 14 C	Lighting or Starting (Delco-Remy)—Cutaway Sprocket
T 14 D	" (Delco-Remy Heavy Duty)—Cutaway Sprocket
T 15	Engines with undersize crankshaft
T 16	Cutaway Sprocket
T 17	Auburn Clutch

NUMERICAL INDEX

PART NUMBER	PAGE
No.	
100 068	67
101 150	187
102 645	186
102 647	50, 51
102 652	91
102 720	8
102 833	39
102 843	32
102 845	39
103 024	9, 31, 32, 77, 97
103 025	9, 32, 38, 47, 60
103 026	8, 9, 10, 24, 28
103 027	107
103 028	7, 8, 9, 10, 28
103 030	15, 83, 89, 98, 116
103 031	90, 91, 122, 128, 129
103 032	128, 129, 166, 167, 179
103 088	189
103 089	97
103 128	72, 101
103 319	49, 58, 60, 62, 74
103 320	15, 24, 27, 32, 38
103 321	8, 9, 10, 14, 15
103 322	60, 115
103 323	14, 16, 23, 25, 28
103 325	28, 75, 83, 89, 98
103 326	89, 90, 91, 122, 127
103 327	90, 91, 128, 129, 145
103 341	31, 39
103 345	39
103 361	85, 122
103 372	152, 155
103 373	83, 98, 108, 110, 119
103 374	19, 63
103 384	98, 99, 122, 167, 177
103 385	39, 97, 98, 120
103 386	115, 121
103 387	24
103 407	203
103 408	177
103 409	123
103 412	128
103 423	147
103 495	39
103 497	108
103 498	122
103 646	28, 62
103 865	28
103 867	29, 57, 177
103 869	177
103 870	25, 175
103 873	29
103 874	29, 57
103 875	14, 25
103 876	15, 25, 57
103 878	41
103 879	55
103 883	41, 117
103 884	41
103 907	29
104 073	107
104 203	144
104 237	14
104 279	84
104 939	89
104 941	89
104 942	36, 126
105 404	117
105 453	57
105 604	49
106 262	85
106 495	75
106 497	32, 51, 80, 99
106 498	187
106 622	89
106 624	89
106 643	175
106 645	89
106 749	63, 66, 186
106 750	23
106 751	51, 107
107 761	189
107 762	39, 186
107 763	85
107 765	89
108 629	51
108 630	120, 121, 122, 203
108 641	19, 21
108 687	175
108 689	175, 201
109 352	117
109 353	86
109 460	122
109 461	83, 86, 91, 108, 109, 116, 127, 130
109 462	108, 187
109 864	147
109 866	147
110 490	62
110 500	80, 99
110 501	51
110 504	32
110 633	80, 99
110 634	51
112 526	171
112 726	33
112 896	189
113 256	156
113 625	65
113 782	51
113 916	117
113 974	49
114 353	85
114 492	155
114 493	39
114 494	33
114 498	28
114 499	16, 51
114 604	9, 31, 32
114 606	110
114 608	110
114 684	96
114 689	96
114 777	35
114 794	16
115 449	57
115 547	152, 155
115 548	17
115 553	133
116 566	133, 136, 139
117 243	35
117 931	89
117 977	16
117 986	132
117 994	19, 21, 180
119 252	110
119 254	63
119 512	83, 86, 91, 130

NUMERICAL INDEX

PART NUMBER	PAGE
120 063	15
120 614	68
120 217	66, 67, 68, 69
121 326	91, 122, 123, 147, 195
121 358	75
121 744	34, 35
121 841	65, 68
122 712	85
125 438	128, 129
125 750	97
126 045	11
126 121	117
128 116	113
128 127	132, 133
131 035	147
131 095	67
131 181	66
131 693	34
131 974	68
132 105	65
132 119	66, 67
132 124	69
132 133	68
132 198	34, 35
132 208	35
132 646	35
132 684	75
132 760	67
132 768	107
134 536	107
137 130	39
141 706	73
143 997	11
147 587	97, 98, 120
172 529	107, 108
172 531	8
172 545	107, 108
172 558	50
172 570	17
172 574	17
172 580	17
172 598	17
177 810	65
179 790	152, 155
179 793	60, 126
179 796	93
179 814	15, 149
179 816	24, 84, 107, 122, 171
179 817	27
179 818	32
179 826	120
179 827	168, 169
179 835	60, 93, 94, 95, 98
179 837	24, 49, 60, 89, 94
179 838	14, 19, 96, 100, 101
179 839	15, 16, 28, 29, 45
179 840	94, 95, 107, 109, 148
179 841	14, 15, 30, 31, 50
179 842	15, 24, 169
179 843	176, 201
179 844	65
179 845	60
179 847	8
179 848	24
179 851	8, 24
179 860	60
179 862	115
179 879	49, 104, 149
179 881	14, 50, 75, 80, 99
179 883	16, 30, 89, 101, 181
179 884	99, 101, 126
179 885	41, 55, 89, 93, 94
179 886	123, 136
179 887	14, 50, 53, 93, 94
179 889	53, 98, 110
179 890	72, 110, 158
179 893	45, 127
179 897	43
179 927	158
179 929	116, 126, 132
179 931	83, 125, 176
179 946	89
179 950	176, 201
179 952	90, 91, 127, 199, 201
179 953	130, 201
179 954	133, 176
179 957	129, 191
179 973	127
179 974	90
179 975	194, 195
179 977	145
179 981	145
179 982	145
179 998	146
181 308	62
181 309	97
181 331	89
181 342	60
181 356	50, 72
181 360	15, 71, 77, 80, 148
181 361	177
181 364	72, 108, 149
181 365	91
181 366	14
181 370	28, 176, 201
181 374	104, 183
181 377	28
181 380	49
181 381	119
181 426	91
181 427	75, 80, 148
181 428	63, 175
181 429	60, 110, 119, 125, 181
181 430	91
181 431	101, 125, 178, 201
181 433	125, 149
181 434	198
181 435	50, 63, 125, 127
181 436	63, 190
181 440	190
181 445	50
181 466	130
181 477	116, 197
181 480	129, 133, 193
181 481	127
181 482	125
181 484	178, 197
181 485	193
181 486	178
181 511	91, 127
181 520	195
181 521	129
181 522	128
181 530	128, 129
181 532	91, 166, 167, 179
181 533	179
181 534	195
181 536	128, 129, 167
181 540	128, 129
181 645	67
186 283	15
186 284	24
186 288	173
186 336	28
187 000	189
187 152	101
187 201	55
187 394	16
187 396	141
200 009	61
218 437	8, 39, 122
218 438	39, 189
218 443	127, 202
218 445	57, 123
220 064	60, 116, 189
220 065	72, 117, 168, 169, 183
220 066	14, 32, 96, 99, 148

NUMERICAL INDEX

PART NUMBER	PAGE
220 068	32, 109, 120, 149
220 080	122
220 081	89, 130, 176, 201
224 933	66
228 148	32
411 449	86
421 454	69
426 152	147
426 720	125
436 692	68
443 569	85
444 660	55
445 084	57
D	
D 2 616	176, 202
1 242 DB	14
2 546 DBYB	67
2 547 DX	65
2 548 DAY	68
2 551 DAY-6	65
3 202 DD	18
3 713 DA	14
3 930 DX	68
4 222 D	18
4 926 DA	89
4 926 DAX	89
4 988 D	13
4 993 DD	15
4 994 DD	15

PART NUMBER	PAGE
5 005 DAX	50
5 006 DAX	50
5 020 DB	7
5 027 DB	8
5 028 D	8
5 029 DX	8
5 049 DAX-32	35
5 049 DBX-32	35
5 051 DX	35
5 086 DX	68
5 421 D	20
5 711 DC	116
5 712 DB	116
5 714 DB	116
5 714 DD	116
5 715 D	116
5 723 DC	83
5 725 DBX	136
5 726 D	136
5 727 DA	127
5 728 DB	127
5 729 DAX	127
5 733 D	139
5 734 DY	139
5 735 D	138, 193
5 740 DX	186
5 767 DAX	90
5 768 DBX	91
5 769 DBX	90
5 770 DAX	91
5 774 DA	145
5 776 DA	145
5 777 DA	145
5 801 DAX	122
5 803 DC	89
5 812 D	122
5 813 DA	123
5 814 D	123
5 815 D	97, 122
5 816 DB	122
5 817 DB	122
5 818 D	98, 121
5 830 DB	147
5 831 DA	147
5 833 D	126
5 834 D	127
5 839 DA	111
5 841 DX	109
5 842 DA	110
5 843 DA	111
5 845 DA	111
5 863 DDX	128
5 864 DDX	128
5 865 DA	129
5 866 DBX	129
5 867 DBX	129

PART NUMBER	PAGE
5 869 DBX	132
5 870 DBX	132
5 871 DB	132
5 872 DB	132
5 873 D	133, 191
5 874 D	132
5 875 DBX	132
5 876 DA	126
5 878 D	126
5 897 DA	130
5 900 DKY	89
5 941 DB	95
5 944 DA	94
5 945 DA	93
5 947 D	62
5 947 DX	63
5 958 DBX	19
5 960 D	16
5 963 DBX	24
5 975 DX	34
5 976 DAX	14
5 977 DA	167
5 980 D	167
5 981 DXA	24
5 982 DAX	24
5 983 D	24
5 984 DX	24
5 987 DX	28
5 988 DA	28
5 989 D	29
5 992 D	60
6 263 D	176
6 264 D	176
6 266 DX	175
6 268 DX	199
6 269 DCX	176
6 270 DX	175
6 276 DX	199
6 277 D	199
6 442 D	95
6 511 D	143
6 516 D	180
6 649 D	38
6 666 DB	127
6 670 D	143
6 671 D	143
6 824 D	143
6 825 D	143

PART NUMBER	PAGE
8 046 DA	176
8 107 D	167
8 108 D	167
8 334 D	110
8 367 D	138, 193
8 383 D	169
8 384 D	169
8 389 DA	89, 110
8 531 DA	113
8 532 D	113
8 573 DX	171
8 617 DAX	39
8 679 DA	119
8 680 DX	115
8 682 DX	115
8 721 D	39
8 735 DX	202
8 736 DBX	201
8 737 DA	201
8 738 D	176, 201
8 739 D	202
8 740 D	201
8 741 DXA	177, 203
8 742 DAX	116
8 743 DAX	116
8 815 D	183, 184
8 816 D	183, 184
8 817 D	183, 184
8 830 D	101
8 831 DAXA	98
8 895 D	194
8 903 DX	144
8 904 D	145
8 929 D	16
8 935 D	173
8 941 DX	145
8 942 DX	145
8 969 D	194
8 980 D	195
8 981 D	194
8 982 DX	195
8 983 DX	195
8 984 D	194
9 015 DAXA	98

NUMERICAL INDEX

PART NUMBER	PAGE
9 162 D	191, 193
9 163 DA	143
9 166 DX	145
9 167 DX	145
9 176 DX	144
9 390 DX	35
9 446 DAX	38
9 453 D	32
9 454 D	32
9 457 D	110
9 468 DX	126
9 469 DAX	126
9 470 DX	125
9 471 DAX	125
9 473 DX	126
9 534 DA	159
9 636 D	177, 203
9 717 D	116
9 783 D	108
9 785 DX	98
9 787 DX	107
9 788 DX	107
10 481 D	62
10 482 D	62
10 553 D	62
10 701 DA	50
10 722 D	126
10 961 D	23, 25
11 373 D	107
12 736 D	58
12 740 D	62
13 001 D	13
13 021 D	23
13 062 D	14
13 191 D	105
13 193 D	105
13 194 D	105
13 722 D	176, 202
13 839 D	41, 55
13 841 D	41, 55
13 842 D	55
14 581 D	34
14 971 D	34
15 435 D	30
15 944 D	133
16 445 D	99, 103
16 518 D	51
17 053 D	107, 108
17 564 D	105
17 565 DA	105
17 700 D	107
17 829 DA	133, 136, 139
18 377 D	34
18 501 DA	110
18 507 D	177, 199, 202
18 511 D	109, 110
18 585 DA	89, 110
18 746 DA	10, 20
18 767 D	180
18 868 D	131
19 289 D	159
19 291 D	159
19 292 D	159
19 323 D	159
19 324 D	159
19 325 D	159
19 326 D	159
19 327 D	159
19 328 D	158
19 329 D	158
20 156 D	159
20 157 D	159
20 308 D	115
20 586 D	38, 39
20 841 D	121
20 887 DA	107
21 319 D	66
21 322 D	65
21 323 D	65
21 327 D	68
21 328 DX	65
21 329 DX	68
21 330 D	69
21 331 D	67
21 333 DX-6	66
21 340 D	66
21 342 D	66
21 343 D	66
21 347 DC	65
21 349 D	66
21 353 D	66
21 358 D	69
21 360 DX-6	66
21 361 D	65
21 362 D	65
21 366 D	65
21 368 DBY-6	68
21 372 D	69
21 373 DBY-1	68
21 383 D	68
21 384 DXA	69
21 388 DBX-1	68
21 394 D	68
21 399 DX	67
21 401 DAX	66
21 409 DB	65
21 422 D	65
21 438 DB	69
21 443 DX	69
21 444 D	69
21 460 DY	65
21 463 DAXA	65
21 464 DX	66
21 466 D	66
21 468 D	66
21 469 D	66
21 572 D	110
21 599 D	202
21 969 D	115
22 080 D	77, 80
22 507 D	51
22 510 D	104
22 716 DA	62
23 086 D	58
23 125 D	103
23 874 D	50, 203
23 977 DA	103
23 995 DA	103
24 602 DA	67
24 603 D	67
24 604 D	67
24 605 D	67
24 609 D	66
24 610 D	67
24 611 D	66
24 612 D	66
24 613 D	66
24 616 DA	66
24 672 D	36
24 691 D	36
24 805 D	45
24 857 D	15
24 943 D	19
24 961 D	8
24 962 D	8
24 964 D	8
24 965 D	8
25 043 DB	13
25 063 DA	15
25 076 D	17
25 086 DA	15
25 087 D	16
25 090 DD	10
25 093 DA	15
25 115 D	38
25 121 DC	14
25 130 D	14
25 131 D	14
25 132 D	16, 62
25 134 DB	19
25 138 DAX	16
25 139 DCR	14, 15
25 140 DDX	14

NUMERICAL INDEX

PART NUMBER	PAGE
25 323 D	17
25 352 D	63
25 354 D	50
25 362 D	50
25 462 DA	158
25 463 D	159
25 466 D	159
25 796 DA	68
25 948 D	36
25 954 D	16
26 245 D	187
26 248 D	187
26 249 D	187
26 250 D	187
26 251 D	186
26 256 D	186
26 257 D	186
26 259 D	187
26 261 D	187
26 915 DA	18
26 916 D	18
27 044 D	175, 201
27 046 D	175, 201
27 048 D	175, 201
27 140 DDX	8
27 141 D	8
27 159 DB	184
27 311 D	68
27 385 D	71, 72
27 386 D	72
27 387 D	60
27 435 D	34
27 436 D	34
27 445 DAX	36
27 445 DB	36
27 452 D	33
27 595 D	77, 80
27 618 D	72, 79
27 838 D	85
27 927 DA	49
28 388 DA	62
28 655 D	66
28 656 DYA	65
28 656 DZA	65
28 657 DX	65
28 674 D	65
28 737 DX	19
28 738 D	19
28 772 D	41
28 781 D	57
28 856 D	69
28 899 D	104
28 940 DA	14
29 547 D	107
29 565 D	13
29 764 D	16, 63
29 784 D	152
29 836 D	171
29 898 D	99
29 899 D	95, 104, 105, 117
29 899 DB	103
29 902 DX	36
30 035 DA	68
30 036 D	68
30 114 D	67
30 307 D	68
30 378 D	67
30 379 D	67
30 397 D	14
30 436 D	79
30 624 D	20
30 665 D	71
30 693 DX	80
31 121 D	11
31 135 D	68
31 180 D	186
31 232 D	85
31 439 DB	50
31 441 D	50
31 458 D	18
32 181 D	95
32 280 DCR	16
32 281 DBR	16
32 282 DCR	16
32 283 DBR	16
32 288 DBXA	19
32 305 DBXA	19
32 309 DD	15
32 310 DX	15
32 311 D	15
32 312 DB	15
32 319 D	24
32 332 D	20
32 333 D	20
32 340 DB	50
32 341 D	50
32 342 DB	49
32 343 D	50
32 345 DA	51
32 347 D	50
32 361 DA	65
32 362 D	50
32 367 DAX	14
32 368 DC	16
32 370 D	16
32 371 DC	16
32 380 D	16
32 444 D	9
32 445 D	10
32 447 DA	9
32 448 D	10
32 454 D	11, 13
32 455 D	10
32 457 DB	9
32 458 DA	7
32 459 D	7
32 463 D	11
32 465 D	8
32 482 DE	10
32 485 D	10
32 486 DBX	13
32 493 D	49
32 497 DAX	62
32 499 DAX	62
32 500 DB	62
32 501 D	63
32 502 D	63
32 503 D	62
32 504 D	63
32 505 DB	62
32 506 DA	62
32 523 DA	28
32 574 DA	35
32 576 DX	36
32 577 D	34
32 578 D	34
32 581 DBX	36
32 582 D	34
32 585 DA	34
32 586 D	34
32 587 D	34
32 588 D	34
32 589 DX	34
32 590 D	33
32 592 D	34
32 597 D	35
32 599 D	34
32 600 D	34
32 601 D	34
32 602 DAX	34
32 603 DAX	67
32 604 D	35
32 606 DA	34
32 607 DA	34
32 608 D	34
32 609 D	34
32 610 D	34
32 614 DX	35
32 615 D	34
32 616 D	34
32 671 D	66
32 673 DA	68
32 711 D	67
32 712 D	67
32 713 DC	60
32 896 D	172
32 897 D	172
32 941 D	159
32 942 D	19
33 138 D	66
33 150 D	67

NUMERICAL INDEX

PART NUMBER	PAGE
33 275 D	50
33 788 D	62
35 089 D	91, 175, 176
35 252 D	117
35 252 DX	117
35 319 D	62
35 691 DX	36
35 719 D	62
36 092 D	172
36 246 D	67
36 273 D	75
36 795 DA	19, 180
36 796 DA	16
36 797 D	16
36 798 D	16
36 799 D	16
36 946 D	151
36 947 D	151
37 146 DA	49
37 148 D	49
37 150 D	49
37 152 DA	49
37 165 D	11, 51, 103, 104
37 290 D	133, 136, 139, 140
37 291 D	61
37 293 D	138
37 323 DX	11, 51, 104
37 547 D	186
37 575 D	187
37 577 DX	187
37 599 D	187
37 976 D	72
38 026 DM	51
38 026 DMX	51, 103
38 028 DM	16
38 041 D	65
38 087 D	77, 80
38 100 D	71, 79
38 411 D	79
38 609 DA	65
38 814 DX	16
39 401 DB	15
39 422 D	21
39 423 D	21
39 651 D	157
39 652 D	157
39 653 D	157
39 654 D	157
39 655 D	157
39 656 DX	157
39 659 D	157
39 661 D	157
39 662 D	157
39 663 D	157
39 665 D	157
39 677 D	41, 43
39 749 DA	60
39 756 D	14
39 757 DC	14
39 759 DA	14
39 763 D	14
39 764 DB	14
39 800 D	157
39 810 D	13
39 826 D	36
39 868 D	157
39 870 D	157
39 875 D	157
40 142 D	168
40 151 D	168, 169
40 628 D	151
40 630 D	152
40 631 D	151, 155
40 636 D	151
40 638 D	152, 155
40 640 D	151
40 641 D	151
40 642 D	151, 155
40 644 D	151
40 646 D	151, 155
40 647 D	151
40 648 D	151
40 649 D	151
40 652 D	152
40 655 D	152
40 656 D	151
40 657 D	151
40 661 D	151
40 693 D	151
40 698 D	152
40 700 D	151
40 703 D	151, 155
40 711 D	151
40 712 D	151
40 713 D	151, 155
40 725 D	151
40 728 DA	151
40 875 DAXA	20
40 880 D	115
40 882 D	116
40 883 DC	116
40 888 D	110
40 891 DD	115
40 929 D	116
40 930 D	113
40 931 D	113
40 932 DA	89
40 938 DI	84
40 941 DA	83
40 942 DX	83
40 943 D	83
40 944 DB	83
40 945 D	83
40 946 D	83
40 947 D	83
40 948 D	83
40 974 DA	83
40 976 DC	135, 193
40 977 DC	135, 193
40 978 DC	135, 193
40 979 DA	135, 193
40 980 DB	135, 193
40 981 D	135, 193
40 982 DA	135, 193
40 985 DA	143
40 986 DB	143
40 987 D	136
40 988 D	136
40 990 D	127
40 991 DA	136
40 992 D	136
40 993 D	136, 139
40 996 DA	127
40 997 DA	127
40 998 DA	89, 127
40 999 D	125
41 162 D	89
41 400 DA	138
41 402 DA	138
41 404 DAX	132, 139
41 405 DA	139
41 406 D	139
41 408 D	139
41 429 D	90
41 430 D	91
41 431 D	91
41 432 DXA	91
41 433 DXA	91
41 435 DB	90
41 436 D	125
41 438 D	145
41 440 D	144
41 441 DA	144
41 442 D	195
41 442 DA	144
41 443 D	145
41 444 D	145
41 445 D	145
41 446 D	145
41 447 D	145
41 448 D	145
41 449 D	145
41 450 D	145
41 451 D	145
41 458 D	146
41 458 DX	143
41 459 D	125
41 464 D	126
41 466 DAX	126
41 467 DA	125
41 483 DA	122
41 491 D	123
41 492 D	123
41 493 D	123
41 495 D	122
41 496 D	122
41 497 D	122
41 498 D	89, 123
41 499 D	122
41 500 DA	123
41 501 D	122
41 508 D	122
41 509 D	123
41 512 DA	121
41 514 D	122
41 515 D	122
41 517 D	123
41 518 D	123
41 519 D	121
41 520 DA	123
41 521 D	122
41 522 D	122
41 523 D	121
41 524 D	122
41 535 DAX	149

NUMERICAL INDEX

PART NUMBER	PAGE
41 536 DX	148
41 574 DCX	103
41 589 D	147
41 591 DA	147
41 592 D	147
41 593 D	147
41 594 D	147
41 595 DA	147
41 597 DA	83, 98, 99, 108, 119, 177, 203
41 599 D	89
41 600 D	89
41 604 D	126
41 605. D	126
41 606 D	126
41 608 D	126
41 609 D	126
41 610 D	126
41 612 D	127
41 613 D	127
41 618 D	127
41 619 D	127
41 620 D	127
41 634 D	32
41 641 DX	32
41 646 DA	111
41 647 DB	111
41 649 DB	109
41 654 DX	109
41 658 D	110
41 660 D	110
41 661 D	111
41 662 DA	110
41 663 D	111
41 666 D	109
41 667 D	111
41 668 DA	109
41 670 D	110
41 671 D	109
41 672 DA	111
41 678 DA	111
41 679 DA	111
41 680 DA	111
41 681 D	110
41 690 D	109
41 693 DA	83
41 694 DA	107
41 768 D	119
41 826 DXA	72
41 827 D	72
41 830 D	72
41 831 D	72
41 832 DBX	72
41 842 D	126, 131
41 843 DA	129
41 845 D	129
41 846 DA	128
41 853 DB	129, 133
41 861 D	132
41 862 DA	132
41 864 D	133
41 866 D	132
41 867 DA	132
41 868 D	132
41 876 DAX	126
41 877 D	125
41 878 D	126
41 879 DA	126
41 880 D	127
41 881 D	126
41 882 D	126
41 883 DB	125
41 886 DX	127
41 889 D	125
41 890 D	125
41 893 D	126
41 894 D	127
41 896 DA	190
41 897 DA	190
41 916 D	72
41 935 D	122
41 954 D	99
41 957 D	89
41 999 D	122
42 003 DA	131
42 004 DA	131
42 005 DA	131
42 006 DA	131
42 101 D	136
42 127 D	131
42 128 D	131
42 129 D	131
42 130 D	130
42 131 D	130
42 132 D	131
42 134 D	130
42 175 D	99, 120
42 215 D	171
42 219 DB	18
42 238 D	125
42 239 D	126
42 288 D	89
42 289 D	89, 177, 199, 202
42 290 D	89
42 293 D	90
42 297 D	89
42 298 DB	83
42 383 DA	71, 79, 97
42 384 DXA	104
42 385 D	104
42 387 D	104
42 400 DEX	104
42 406 DX	104
42 493 D	99
42 493 DX	99
42 495 D	104
42 496 DX	107
42 511 D	107
42 512 DAX	98, 107
42 517 D	108
42 518 D	108
42 534 D	94
42 536 D	94
42 537 D	94, 95
42 538 DA	94
42 547 D	98
42 552 D	89, 187
42 553 DXA	98
42 589 D	94
42 594 D	96
42 599 D	94
42 600 D	95
42 603 DA	93
42 605 D	95
42 614 D	94, 95
42 622 DA	149
42 623 DA	148
42 625 D	149
42 626 D	148
42 627 DX	149
42 628 DX	148
42 629 DX	149
42 630 D	149
42 688 DAX	19
42 690 DAX	19
42 694 D	18
42 707 DBRX	14
42 708 D	14
42 709 DX	16
42 713 D	15
42 714 DB	15
42 715 DE	24
42 733 D	15
42 739 DA	9, 31, 32
42 746 D	9
42 747 DB	10
42 748 DA	10
42 763 DB	10
42 769 D	34
42 772 D	171
42 786 D	24
42 789 D	24
42 790 D	24
42 791 DA	24
42 792 D	24
42 794 DC	25
42 833 D	71, 79
42 844 D	34
42 858 D	190, 206, 208
42 863 D	33
42 867 D	34
42 868 D	34
42 869 D	33
42 871 D	34
42 874 DX	198
42 875 DX	198
42 876 D	198, 206, 208
42 877 D	167
42 879 D	167
42 880 DA	167
42 887 D	166, 204, 207
42 888 DB	179
42 891 DA	178
42 892 DX	178
42 896 DA	179
42 897 DA	179
42 898 DBX	178
42 900 D	178
42 901 DA	178, 206, 208
42 902 D	166, 206, 207
42 903 D	188
42 914 D	79, 94
42 915 D	80
42 916 D	80
42 917 D	80
42 921 D	75, 80
42 938 D	28
42 939 D	28
42 940 D	28
42 941 D	28
42 943 D	29
42 971 DX	133
42 972 DX	139
42 999 D	60, 72, 80
43 003 DX	24
43 004 DX	24
43 035 DA	76, 79, 80
43 039 D	73
43 040 D	73
43 043 D	79, 206, 207
43 045 D	79, 206

NUMERICAL INDEX

PART NUMBER	PAGE
43 144 D	93
43 183 D	91
43 190 DB	84
43 193 DBX	84
43 194 D	85
43 195 D	84
43 197 D	84
43 197 DX	84
43 198 D	84
43 199 D	85
43 201 DA	84
43 206 DF	85
43 207 D	85
43 208 DCX	85
43 209 DA	86
43 211 D	85
43 212 DBXA	84
43 213 DBX	85
43 214 D	84
43 217 D	85
43 246 DXA	85
43 248 D	85
43 664 DB	123
45 391 D	38
45 531 D	175
45 532 DA	176, 201
45 534 D	176
45 535 D	175
45 536 D	175
45 537 D	199, 202
45 538 D	202
45 538 DX	177
45 539 DA	199
45 541 D	176
45 541 DA	202
45 542 D	176
45 543 D	176
45 544 D	175
45 545 D	175
45 546 D	175
45 547 D	176
45 548 D	175
45 549 D	175
45 550 D	175
45 551 D	176
45 552 D	177
45 553 D	175
45 555 D	176
45 558 DA	177
45 559 D	175, 176
45 560 D	177
45 561 D	199, 202
45 562 D	175
45 563 D	175
45 564 DA	175
45 565 DA	175
45 578 DA	69, 159
45 580 DA	69
45 581 D	69
45 619 D	199
45 620 D	199
45 794 D	119
45 904 DB	101
45 908 DA	173
45 976 D	16
45 977 D	16
46 042 DA	143
46 043 DA	143
46 044 DA	143
46 045 DA	143
46 046 DA	143
46 047 DA	143
46 052 D	24
46 053 D	24
46 054 DD	23
46 069 DA	143
46 070 DA	143
46 071 DA	143
46 072 DA	143
46 073 DA	143
46 074 DA	143
46 075 DA	143
46 079 DA	143
46 080 DA	143
46 081 DA	143
46 082 DA	143
46 083 DA	143
46 084 DA	143
46 085 DA	143
46 089 DA	143
46 090 DA	143
46 091 DA	143
46 092 DA	143
46 093 DA	143
46 094 DA	143
46 095 DA	143
46 143 DAX	184
46 144 DAX	184
46 149 D	184
46 208 D	10
46 209 D	10
46 211 D	10
46 212 D	9
46 213 D	9
46 337 D	126
46 339 D	168, 204, 207
46 351 D	15
46 369 D	89
46 606 DX	55
46 644 DX	168
46 645 D	168
46 677 D	95
46 680 D	197
46 681 DAX	197
46 682 DAX	197
46 683 DAX	197
46 684 DAX	197
46 685 D	143
46 686 DA	143
46 749 D	202
46 887 D	129
46 970 DA	127, 206, 208
47 210 DA	143
47 211 DA	143
47 212 DA	143
47 213 DA	143
47 214 DA	143
47 215 DA	143
47 216 DA	143
47 217 DA	143
47 218 DA	143
47 488 D	180
47 489 D	180
47 490 D	21, 180
47 491 D	180
47 492 D	180
47 493 D	180
47 525 D	189
47 526 D	189
47 527 D	189
47 528 D	189
47 529 D	189
47 530 D	189
47 531 D	189
47 801 D	14
47 824 D	28
48 173 D	84, 109
48 186 DX	80
48 231 D	104
48 232 D	104
48 233 D	104
48 262 D	13
48 356 D	38
48 358 D	38
48 359 D	38
48 438 D	104
48 467 D	143
48 468 D	143
48 491 D	143
48 512 D	57
48 564 D	65
48 906 D	98
49 104 D	132
49 105 D	176, 202
49 106 D	95
49 326 DA	143
49 327 DA	143
49 328 DA	143
49 364 DA	100
49 398 D	143
49 438 D	143
49 451 DA	58
49 455 DX	50
49 541 DA	176
49 942 D	28
49 952 D	15
50 093 D	147
50 148 D	104
50 180 D	91
50 181 D	91
50 234 D	71
50 235 D	71
50 336 DA	24
50 410 DA	9, 16, 63

NUMERICAL INDEX

PART NUMBER	PAGE
50 474 DA	15
50 585 D	60, 71, 79
50 607 DX	11, 103
50 613 DA	199
50 614 D	177
50 664 D	10
50 668 D	11
50 672 D	9
50 673 D	9
50 674 D	9
50 677 D	32
50 678 D	9
50 682 D	171
50 697 D	32
50 759 D	189
50 760 D	189
50 761 DA	189
50 762 DA	189
50 763 D	189
50 764 D	189
50 767 D	189
50 784 D	74
50 826 D	17
50 827 D	13
50 899 D	207
51 066 DC	103
51 066 DCX	103, 105
51 184 D	167
51 185 D	166, 206
51 203 DA	13
51 205 D	57
51 238 D	113
51 502 D	99
51 515 DA	24
51 516 DA	24
51 527 DB	45
51 888 D	74
51 889 D	74
51 891 D	74
51 893 D	75
51 898 D	75
51 970 D	74

PART NUMBER	PAGE
52 055 DA	161
52 123 D	155
52 176 DC	38
52 348 D	109
52 403 D	99
52 404 D	98
52 405 D	98, 99
52 411 D	99
52 416 DA	90
52 418 D	169, 208
52 419 D	126
52 422 D	139
52 424 DD	129
52 425 DD	129
52 445 D	189
52 446 D	189
52 514 D	32
52 515 DA	32
52 606 D	16
52 621 DX	39
52 624 D	39
52 626 D	39
52 855 D	105
52 893 D	111
53 009 D	111
53 083 D	32
53 136 D	172
53 187 D	151
53 189 D	152
53 192 D	152
53 193 D	152
53 196 D	151
53 207 D	155
53 233 DA	116
53 389 D	117
53 612 DA	18
53 643 D	17
53 717 DA	107
53 742 DA	116

PART NUMBER	PAGE
53 899 D	109
54 082 D	185
54 110 D	127
54 111 D	129
54 124 D	39
54 134 D	113
54 486 D	105
54 652 D	117
54 692 DA	172
54 694 D	171
54 695 DA	171
54 697 D	171
54 708 D	171
54 709 D	171
54 710 D	171
54 968 D	116
55 307 DAX	14
55 339 D	128
55 354 DA	39
55 377 D	99, 120
55 468 D	79
55 468 DA	71
55 479 D	152, 155
55 748 D	99
56 005 D	115
56 006 D	116
56 007 D	115
56 008 D	115
56 009 D	115, 117
56 010 D	115
56 011 D	89
56 012 D	120
56 013 DX	116
56 014 D	89
56 017 D	115
56 018 D	116
56 133 D	139, 193
56 134 D	140
56 192 D	27
56 277 D	60
56 278 D	60

PART NUMBER	PAGE
56 460 D	38
56 463 D	39
56 465 D	110
56 467 D	110
56 475 D	122
56 476 D	123
56 478 D	122
56 597 DX	104
56 599 DX	66
56 673 D	65
56 996 DX	85
57 068 DX	9
57 069 DB	202
57 070 D	202
57 071 DX	201
57 072 DX	201
57 073 DX	201
57 074 D	203
57 075 DB	202
57 076 DA	201
57 077 D	202
57 078 D	202
57 079 D	202
57 080 D	202
57 081 D	202
57 082 D	202
57 083 D	201
57 084 D	201
57 085 D	202
57 086 D	202
57 087 D	202
57 088 D	201
57 089 D	203
57 099 D	115
57 100 DXA	89
57 101 DX	117
57 102 D	117
57 103 DX	116
57 148 DA	207
57 200 D	131
57 237 DA	130
57 241 D	130
57 288 D	119
57 293 D	171
57 311 D	73, 79
57 311 DX	71, 73, 97
57 312 D	73
57 313 D	73
57 386 D	89

NUMERICAL INDEX

PART NUMBER	PAGE
57 387 D	89
57 550 D	60
57 624 D	180
57 734 D	133
57 957 D	36
58 099 DA	184
58 101 D	183, 184
58 103 D	183, 184
58 123 D	38
58 150 DX	39
58 185 D	101
58 194 DA	90
58 199 DA	98
58 203 D	99
58 205 D	98
58 209 D	101
58 210 D	100
58 213 D	100
58 214 D	101
58 218 D	101
58 243 D	65
58 265 D	201
58 266 D	201
58 267 D	201
58 269 DX	177, 203
58 378 D	96
58 379 DC	99
58 402 DX	189
58 511 D	15
58 835 D	36
58 920 DAX	158
58 949 D	145
58 950 D	146
58 951 D	146
58 952 D	146
58 953 D	146
58 954 D	146
58 955 DA	146
58 957 D	116
58 960 D	25
58 989 D	89
59 009 DB	115
59 122 D	187
59 184 D	79
59 236 DX	187
59 237 D	91
59 238 D	91
59 239 D	187
59 254 D	173
59 255 D	173
59 324 D	185
59 328 DA	185
59 332 D	185
59 416 D	101
59 419 D	185
59 550 D	194
59 551 D	194
59 553 DX	194
59 556 D	195
59 557 D	195
59 558 D	195
59 559 D	195
59 560 D	195
59 561 D	195
59 562 D	195
59 563 D	194
59 564 D	194
59 565 D	194
59 566 D	194, 204, 207
59 880 D	171
59 884 D	171
59 887 D	171
59 888 D	171
59 889 D	171
59 989 D	72
59 990 DX	99
59 991 D	99
60 011 D	71
60 012 D	153
60 013 D	153
60 200 D	171
60 250 D	136
60 256 DXA	123
60 257 DXA	121
60 258 DXA	121
60 259 D	121
60 260 DA	123
60 749 D	169
60 805 D	99
60 871 DA	45
60 877 D	43, 45
60 878 DX	43, 45
60 882 DX	45
60 938 D	80
60 947 D	36
61 115 D	86
61 128 D	86
61 130 D	85
61 177 DC	192
61 178 DC	192
61 191 DA	192
61 192 D	191, 192
61 193 DA	197
61 194 DA	197
61 195 DA	197
61 196 DA	197
61 199 D	143
61 271 D	79
61 614 D	176
61 615 D	177, 203
61 732 D	152
61 733 D	152
61 735 D	152
61 736 D	152
61 737 D	152
61 738 D	152
61 739 D	152
61 740 D	152
61 753 D	177, 203
61 808 D	10
61 903 D	117, 206, 208
62 159 D	152, 155
62 302 D	79
62 316 D	177
62 318 D	177
62 319 D	177
62 320 D	177
62 321 D	168
62 352 D	153
62 490 D	133, 191
62 497 D	191
62 573 D	152
62 780 D	108
62 780 DX	108
62 781 D	108
62 782 D	108
62 863 D	89
62 866 D	15
63 007 D	29
63 180 DX	183
63 181 DX	183
63 184 D	183
63 185 D	183
63 186 DA	186
63 187 DA	183
63 188 D	183
63 228 D	120
63 229 D	120
63 230 DX	120
63 266 D	131
63 323 D	71
63 330 DA	20
63 385 D	85
63 785 D	99
64 047 D	25
64 159 D	183, 184
64 163 D	176, 202
64 368 DX	19
64 498 DA	125
64 543 D	38
64 544 D	38
64 545 D	38
64 576 D	32
64 577 D	32
64 578 D	32
64 603 D	107
64 604 D	107

NUMERICAL INDEX

PART NUMBER	PAGE
64 606 D	108
64 607 D	108
64 608 D	108
64 609 D	108
64 620 D	109
64 621 D	111
64 643 D	32
64 801 D	126
64 802 D	126
64 803 D	126
64 807 D	126
64 808 D	125
64 809 D	127
64 810 D	89
64 811 D	126
64 812 D	125
64 813 DX	125
64 814 DX	125
64 996 D	39
65 010 D	89
65 100 DA	135
65 118 DA	135, 192
65 124 DA	135, 191
65 227 D	155
65 338 D	59
65 344 D	59
65 351 D	59
65 401 D	74
65 534 D	79
66 776 D	185
67 119 D	101
67 136 D	99
67 156 D	137
67 228 D	10
67 249 D	143
67 250 D	143
67 847 DC	84
68 084 D	75
68 251 D	9
68 252 D	25

PART NUMBER	PAGE
68 405 DX	158
68 406 D	159
68 407 D	159
68 408 D	159
68 409 D	159
68 410 D	159
68 411 D	159
68 412 D	159
68 413 D	159
68 413 DX	158
68 414 D	159
68 415 D	159
68 416 D	158
68 417 D	76
68 418 D	75
68 462 D	116
68 465 D	109
68 467 D	109
68 628 D	122
69 069 D	108
69 071 DAX	107
69 076 D	83
69 079 D	107
69 080 D	107
69 081 D	149
69 096 D	107
69 097 DX	107
69 106 DA	108
69 107 DB	108
69 108 DB	108
69 371 D	75
69 372 D	74
69 395 D	75
69 491 D	74
69 848 D	75
70 038 D	111
70 039 D	110
E	
E4 212	66
E4 216	65, 69
E4 226	67
E4 271	68
E4 294	67
E4 295	65

PART NUMBER	PAGE
E4A 305	66
E4A 311	69
E4A 324	66
E4A 351	67
E4A 352	67
E4A 353	67
E4A 372	66
E4A 477 A	65
E4A 576	65
1 326 E	159
G	
G 3 836	50
G 6 579-1/3	55
G 9 210	183, 184
H	
H 156	158
H 4 213	99
12 797 H	175
15 033 H	99
15 041 H	99, 119, 120, 121
16 135 H	125
16 603 H	77
16 660 H	77
16 661 H	77
16 662 H	77
21 407 H	123
21 444 H	83
21 826 H	15
25 038 HA	172

PART NUMBER	PAGE
25 574 H	107
26 375 H	72
26 377 H	72
26 453 HX	72
27 166 H	86
27 248 H	80
27 640 H	75
28 500 H	61
29 939 H	77, 80
29 971 H	77, 80
31 208 H	19
31 326 H	108, 152
37 536 H	75
38 763 H	8
41 229 H	75
43 950 H	83
45 027 H	79
47 415 H	15
47 834 H	76
48 716 H	75
50 539 H	75
64 022 H	73
64 931 H	71, 79, 97
66 340 H	75
75 238 H	110
77 492 H	175
79 398 H	74
79 407 H	76
79 408 H	76
84 319 H	60

NUMERICAL INDEX

PART NUMBER	PAGE
91 406 HA	30, 94, 95
98 044 HX	72
98 047 H	27
98 048 H	27
98 049 H	27
98 050 H	29
98 051 H	27
98 052 H	27
104 562 H	76
134 231 H	71
137 517 HA	29
144 093 H	27
L	
12 480 L	50
M	
M 89 541	115
PO	
PO 12 898	179
Q	
Q 17	175
Q 102	32
Q 105	186
Q 1 504	93, 96, 148, 149
Q 1 505	183
Q 1 520	128
Q 1 521	72
Q 1 568	194
Q 1 597	15, 28, 33
Q 3 615	16, 29, 199
Q 3 618	117
Q 3 794	157, 159
R	
12 297 R1	84
12 301 R1	90, 91
12 454 R1	120
12 459 R1	147
12 465 R1	147
12 577 R1	72
13 000 R1	184
13 002 R1	173
13 243 R1	116
13 584 R1	101
14 991 R1	148, 149
14 993 R1	189
16 069 R1	14
16 140 R1	83, 98
16 158 R1	90, 91
16 170 R1	90
250 007 R91	140
250 306 R1	111
250 374 R91	75
250 450 R1	10
250 451 R1	32
250 466 R1	72, 99
250 528 R1	32
250 535 R1	10
250 546 R1	31
250 547 R1	31
250 548 R1	32
250 549 R1	31
250 550 R1	32
250 551 R1	32
250 575 R2	8
250 604 R2	49
250 607 R21	49
250 608 R1	49
250 610 R2	51
250 617 R1	51
250 670 R92	30
250 701 R12	41
250 754 R1	20
250 952 R92	21, 163
251 041 R1	49
251 042 R2	49
251 043 R11	49
251 044 R1	49
251 050 R1	51
251 051 R1	51
251 057 R1	18
251 060 R2	16
251 064 R1	10
251 074 R1	10
251 078 R1	10
251 079 R92	49
251 089 R1	94
251 090 R1	94
251 103 R1	10
251 112 R1	51
251 122 R12	8
251 123 R12	8
251 124 R12	8
251 133 R2	27
251 134 R21	27
251 140 R11	30
251 141 R11	32
251 167 R1	32
251 168 R1	30
251 169 R2	30
251 170 R2	30
251 171 R2	30
251 199 R1	8
251 212 R1	8
251 213 R2	8
251 214 R1	9
251 215 R13	9
251 218 R11	9
251 218 R21	9
251 275 R11	55
251 283 R1	17
251 315 R12	32
251 316 R11	31
251 317 R1	32
251 318 R1	31
251 329 R1	32
251 330 R1	32
251 338 R91	19
251 347 R11	45
251 348 R91	45
251 352 R1	45
251 355 R91	45
251 380 R91	45
251 392 R1	98
251 414 R92	33
251 415 R91	55
251 433 R91	39
251 438 R91	38
251 439 R92	59
251 474 R2	60
251 474 R21	60
251 480 R91	38
251 553 R1	61
251 591 R1	67
251 609 R92	27
251 610 R1	109
251 611 R1	110
251 612 R1	111
251 613 R1	109
251 614 R1	110
251 618 R1	113
251 620 R1	113
251 621 R1	113
251 624 R1	116
251 625 R11	115
251 626 R1	116
251 627 R1	125
251 628 R1	99, 101
251 629 R11	101
251 631 R1	101
251 632 R11	96
251 650 R11	35
251 651 R1	35
251 652 R91	35
251 691 R11	11
251 749 R91	45

NUMERICAL INDEX

PART NUMBER	PAGE
251 975 R91	138
251 976 R1	138, 193
252 986 R91	101
252 987 R91	101
252 988 R91	101
252 989 R1	155
252 991 R1	155
253 124 R1	155
253 160 R91	156
253 202 R1	155
253 203 R1	155
253 204 R1	155
253 205 R1	155
253 583 R21	103
253 701 R92	53
253 703 R91	53
253 983 R1	207
254 070 R91	168, 208
254 071 R93	181
254 151 R11	171
254 224 R1	11
254 225 R1	13
254 240 R3	50
254 264 R92	21
254 281 R1	29
254 287 R92	21
254 287 R96	21, 163
254 411 R12	47
254 412 R12	47
254 413 R12	48
254 414 R12	48
254 415 R12	48
254 416 R2	49
254 421 R11	50
254 422 R21	103
254 423 R11	49
254 424 R1	49
254 451 R92	47
254 459 R91	39
254 460 R11	38
254 474 R91	180, 204, 207
254 485 R1	125
254 621 R1	85
254 753 R1	30, 99
254 895 R2	171
254 895 R21	171
254 896 R21	172
254 898 R11	171
254 899 R11	172
254 900 R12	31
254 909 R11	172
254 924 R11	19
254 926 R91	19
254 933 R91	71, 79
254 977 R91	27
255 009 R92	29, 206, 208
255 031 R91	204, 207
255 039 R1	99
255 067 R91	171
255 068 R91	171
255 069 R11	97, 171
255 077 R92	149
255 082 R92	148
255 083 R92	149
255 098 R22	24
255 478 R1	60
255 479 R1	60
255 631 R31	13
255 882 R91	143
255 883 R91	143
255 902 R91	143
255 933 R91	97
255 985 R93	160
256 013 R91	99, 206, 208
256 065 R2	17
256 157 R1	155
256 158 R1	155
256 159 R1	155
256 160 R1	155
256 161 R11	155
256 162 R1	155
256 163 R1	155
256 164 R1	155
256 165 R1	155
256 166 R91	155
256 167 R1	155
256 168 R1	155
256 169 R1	156
256 170 R91	155
256 177 R91	156
256 196 R1	127
256 197 R1	127
256 260 R11	103
256 294 R91	143, 206
256 295 R91	143, 206, 208
256 296 R91	143, 207
256 297 R91	143, 208
256 298 R91	143, 204
256 299 R91	143
256 300 R91	143
256 301 R91	143
256 304 R91	143
256 305 R91	143
256 306 R91	143
256 307 R91	143
256 355 R91	29
256 600 R91	188, 206, 208
256 633 R11	103
256 659 R1	30
256 680 R11	59
256 681 R11	59
256 726 R91	139
256 763 R91	101
256 788 R91	111
256 789 R1	113
256 790 R1	117
256 801 R1	113
256 802 R1	126
256 833 R1	19
256 845 R3	17
256 846 R3	17
256 847 R3	17
256 848 R1	17
256 862 R1	95
256 863 R1	94
256 898 R91	21
256 899 R91	20
256 900 R91	20
256 901 R91	20
256 902 R91	21
256 903 R91	20
256 904 R91	20
256 905 R91	20
256 910 R91	21
256 911 R91	20
256 912 R91	20
256 913 R91	20
256 918 R11	107
256 919 R11	107
257 209 R91	27
257 210 R1	27
257 211 R91	27
257 212 R1	27
257 213 R11	27
257 214 R1	27
257 215 R91	27
257 216 R1	27
257 217 R1	27
257 263 R94	22
257 265 R94	21
257 271 R94	21
257 272 R94	21
257 274 R94	21
257 276 R94	20
257 277 R94	20
257 279 R94	20
257 281 R94	20
257 282 R94	20
257 284 R94	20
257 291 R91	19
257 292 R91	19
257 294 R91	19
257 330 R91	138, 193
257 616 R12	98, 108
257 617 R22	98, 119
257 618 R22	97, 119
257 619 R1	119
257 620 R1	99, 120
257 621 R11	119
257 622 R1	119
257 623 R1	119
257 624 R2	120
257 625 R1	120
257 626 R1	120
257 676 R2	138
257 695 R1	11
257 751 R91	143
257 752 R91	143
257 753 R91	143
257 754 R91	143
257 755 R91	143, 206
257 756 R91	143, 206, 208
257 757 R91	143, 208
257 758 R91	143, 208
257 867 R91	55

NUMERICAL INDEX

PART NUMBER	PAGE
258 149 R11	27
258 222 R92	184
258 270 R91	28
258 273 R11	19, 180
258 274 R91	20
258 275 R11	29
258 344 R1	11
258 394 R92	162
258 417 R2	24
258 431 R91	7, 17
258 518 R91	110
258 534 R1	109, 110
258 537 R92	181, 208
258 562 R92	84, 206, 208
258 575 R91	177
258 592 R91	186
258 634 R91	97
258 637 R91	21
258 638 R91	21
258 640 R91	21
258 836 R91	19
258 999 R92	60
259 440 R91	93
259 445 R1	125
259 446 R11	109
259 447 R1	109
259 453 R91	101
259 454 R91	125
259 455 R91	125
259 458 R1	45
259 459 R11	103
259 460 R11	103
259 480 R92	41, 43
259 485 R91	41
259 525 R1	24
259 545 R12	16
259 546 R1	16
259 547 R12	16
259 584 R91	192, 204, 207
259 588 R91	143
259 589 R91	143
259 594 R1	93
259 595 R1	93
259 596 R1	93
259 598 R2	93
259 599 R91	93

PART NUMBER	PAGE
259 603 R91	93
259 604 R1	93
259 607 R91	94
259 608 R11	94
259 609 R1	94
259 610 R91	94
259 611 R1	94
259 612 R11	94
259 633 R91	41
259 703 R12	83
259 712 R91	101
259 743 R11	19
259 752 R91	22, 163
259 873 R91	122, 163
259 874 R91	122, 163
259 890 R21	10
259 891 R21	9
259 893 R1	10
259 894 R1	17
259 897 R11	47
259 898 R11	47
259 899 R11	48
259 900 R11	48
259 901 R11	48
259 921 R1	10
260 002 R1	15
260 003 R1	15
260 160 R92	111
260 161 R1	111
260 162 R91	110
260 163 R1	110
260 164 R1	110
260 165 R1	111
260 166 R1	111
260 167 R1	111
260 168 R1	111
260 169 R1	110
260 170 R1	110
260 171 R1	109
260 226 R91	112, 163
260 234 R1	57
260 304 R1	51
260 387 R91	71
260 388 R91	71, 79
260 389 R91	71, 79
260 390 R91	51

PART NUMBER	PAGE
260 616 R1	113
260 617 R1	113
260 618 R1	116
260 619 R1	117
260 660 R91	113, 163
260 698 R21	43
260 699 R1	43
260 700 R1	43
260 701 R1	43
260 703 R2	43
260 705 R1	43
260 706 R91	43
260 707 R1	43
260 708 R1	43
260 709 R1	43
260 710 R2	43
260 712 R91	43
260 714 R1	143
260 717 R1	24
260 722 R1	39
260 723 R11	39
260 736 R11	51, 104
260 737 R11	51, 104
260 738 R21	51
260 757 R92	51
260 758 R1	51
260 759 R1	51
260 760 R1	51
260 761 R1	51
260 766 R11	24
260 837 R11	104
260 838 R11	104
260 839 R1	43
260 905 R91	197, 206, 208
260 910 R91	41, 163
260 946 R1	9
260 977 R91	9
260 978 R91	9, 163
260 968 R1	140
260 990 R1	138, 193
260 991 R91	139
260 993 R11	138
260 995 R11	138
261 007 R1	139
261 115 R91	27, 28
261 125 R92	140, 193
261 126 R92	140
261 127 R91	140, 163
261 128 R91	141, 163
261 148 R1	18
261 149 R1	18

PART NUMBER	PAGE
261 150 R1	18
261 154 R91	22, 163
261 192 R91	43
261 193 R91	43
261 250 R92	156
261 281 R11	136
261 282 R11	132
261 285 R1	17
261 343 R91	163
261 355 R1	156
261 357 R1	155
261 358 R92	156
261 387 R91	80
261 483 R91	204, 205, 206
261 503 R1	138
261 506 R1	138
261 514 R91	30
261 521 R91	137
261 535 R1	43
261 590 R91	99
261 611 R1	57
261 612 R1	57
261 613 R1	57
261 614 R11	57
261 620 R1	57
261 620 R11	57
261 621 R11	57
261 622 R1	139
261 624 R1	57
261 626 R2	57
261 627 R91	57
261 630 R1	57
261 649 R1	139
261 661 R91	113
261 672 R91	19
261 805 R91	58
261 830 R11	57
261 833 R11	57
261 835 R1	57
261 836 R1	57
261 925 R91	58
261 936 R91	58, 206
261 960 R1	24
262 034 R91	57
262 035 R11	57

NUMERICAL INDEX

PART NUMBER	PAGE
262 036 R1	57
262 037 R11	13
262 040 R91	55, 163
262 146 R91	57, 163
262 454 R91	60
262 557 R11	39
262 583 R1	20
262 636 R11	111
262 647 R91	47
262 652 R1	127
262 653 R1	127
262 735 R1	93
262 856 R1	51
262 885 R1	155
262 894 R1	159
263 249 R91	22
350 517 R1	98
351 840 R91	155
352 154 R91	72
352 265 R1	72
352 352 R1	34
353 200 R91	69
354 057 R2	51
354 473 R91	71, 79
354 766 R1	34
354 767 R1	34
354 768 R1	34
354 769 R11	35
354 774 R91	36, 163
ST	
ST 202	176, 199, 202
ST 205 A	115
ST 207	28
ST 208 A	50
ST 213	50, 203
ST 221	175
ST 240	83
ST 260	187
ST 262	27, 28
ST 264	110
ST 265	202
ST 269	109, 110
ST 273	84, 109
ST 274	109
ST 276	126
ST 278	176, 201
ST 297	175
ST 307	67
ST 310	83
ST 333	116
ST 335	109
ST 336	125
ST 338	125
ST 600	67
ST 601	67
ST 602	67
T	
TD-18A-100-0	204
TD-18A-500-0	207
2 583 T	159
2 587 T	159
2 588 T	159
3 741 T	86
5 312 T3	24
6 220 T	107
6 403 T	187
8 522 T	28
9 982 T	41, 43
U	
U 14 284	168, 169
V	
10 430 V	83
10 439 VA	79
10 690 V	176, 201
10 815 V	79
11 251 V	77
11 294 V	187
51 344 V	105
61 175 V	123
Y	
1 627 Y	80, 96

MEMORANDA