TRANSMISSION AND TORQUE CONVERTER LINES
U001175 and below
C001195 and below

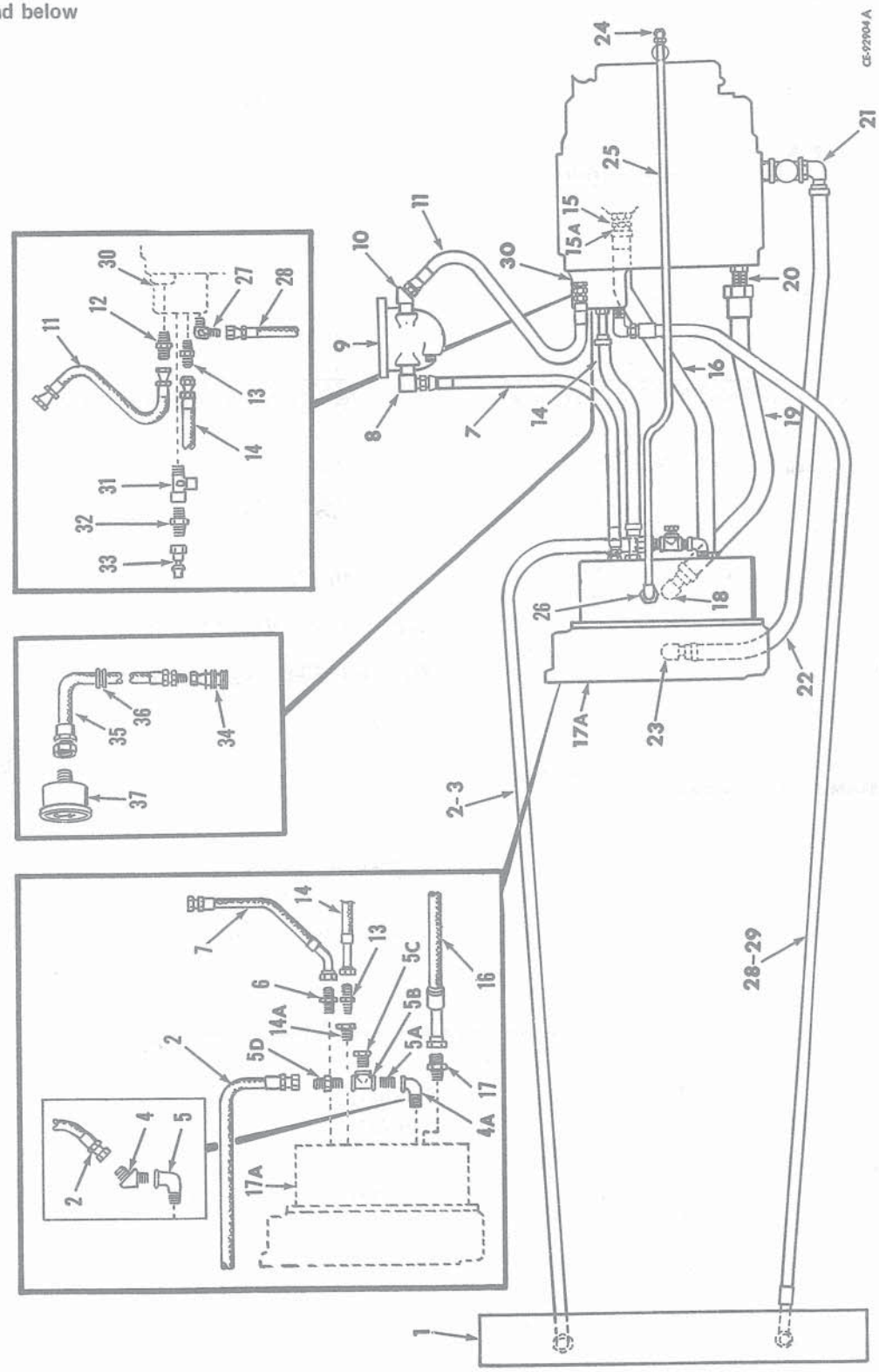

PRINTED IN UNITED STATES OF AMERICA

TRANSMISSION AND TORQUE CONVERTER LINES
U001175 and below
C001195 and below - Continued

REF. NO.	PART NUMBER	DESCRIPTION
		LINE - CONVERTER TO COOLER
1		COOLER, oil (See Oil Cooler in Section 6)
2	884 070 C1	HOSE
3	142 846 H1	CLAMP, hose to frame (2)
	181 315	1/4NF x 1" BOLT (2)
	106 261	1/4" flat WASHER (2)
	103 319	1/4" lock WASHER (2)
	103 024	1/4"NF hex NUT (2)
4	884 136 C1	TEE, special (used with Torque Converter 884 026 C92)
4A	892 495 C1	ELBOW, 90° (used with Torque Converter 892 460 C91)
5	108 687	ELBOW, 90° (used with Torque Converter 884 026 C92)
5A	127 874	NIPPLE (used with Torque Converter 892 460 C91)
5B	115 237	TEE (used with Torque Converter 892 460 C91)
5C	21 113 R1	BUSHING, reducer (used with Torque Converter 892 460 C91)
5D	9 402 713	CONNECTOR (Used with Torque Converter 892 460 C91)
		LINE - COOLER TO TRANSMISSION
6	9 402 711	CONNECTOR
7	884 137 C1	HOSE, converter to filter
8	9 402 867	ELBOW, 90°
9		FILTER (See Converter Line Oil Filter in this Section)
	181 340	5/16NF x 1-1/8" BOLT (4)
	615 031 R1	5/16" flat WASHER (4)
	103 320	5/16" lock WASHER (4)
	103 025	5/16"NF hex NUT (4)
10	9 402 828	ELBOW, 45°
11	134 151 H1	HOSE, filter to valve
12	876 167 C1	CONNECTOR
		LINE - CONTROL VALVE TO CONVERTER
13	9 402 711	CONNECTOR (2)
14	884 135 C1	HOSE
14A	21 114 R1	BUSHING, reducer (used with Torque Converter 892 460 C91)
		SUCTION LINE - TRANSMISSION TO CONVERTER
15	9 410 207	UNION
15A	296 247 R1	"O" RING
16	884 134 C1	HOSE
17	9 402 713	CONNECTOR
17A		CONVERTER, torque (See Torque Converter in this Section)
		DRAIN LINE - CONVERTER TO TRANSMISSION
18	9 402 869	ELBOW, 90°
19	884 066 C1	HOSE
20	9 402 831	ELBOW, 45°
		DRAIN LINE - FLYWHEEL HOUSING TO TRANSMISSION
21	9 402 870	ELBOW, 90°
22	884 067 C1	HOSE

* - Also listed and illustrated in Section 11.

TRANSMISSION AND TORQUE CONVERTER LINES - Continued

DRAIN LINE - FLYWHEEL HOUSING TO TRANSMISSION – Continued

REF. NO.	PART NUMBER	DESCRIPTION
	140 860 H1	CLAMP
	181 397	7/16NF x 1-1/4" BOLT
	103 322	7/16" lock WASHER
	271 505	7/16NF NUT
23	891 593 C1	ELBOW, 90°

LINE - CONVERTER VENT

REF. NO.	PART NUMBER	DESCRIPTION
24	42 411 D	ELBOW, w/o NUT
	414 505 C1	INSERT
25		TUBE, nylon w/o NUT, cut length 3/8 O.D. x 72" long cut from BULK TUBE, 417 199 C2
	37 165 D	NUT, 3/8" tube (2)
26	144 048	BUSHING, reducer

LINE - COOLER TO TRANSMISSION

REF. NO.	PART NUMBER	DESCRIPTION
27	9 402 869	ELBOW, 90°
28	884 071 C1	HOSE
29	142 846 H1	CLAMP (2)
	181 315	1/4NF x 1" BOLT (2)
	106 261	1/4" flat WASHER (2)
	103 319	1/4" lock WASHER (2)
	103 024	1/4"NF hex NUT (2)

QUICK DISCONNECT

REF. NO.	PART NUMBER	DESCRIPTION
30		VALVE, regulator (See Regulator Valve in this Section)
31	113 169 H1	TEE 01034 and up except 01065
32	22 308 R1	NIPPLE 01034 and up except 01065
33	342 775 R91	CAP, quick disconnect 01034 and up except 01065

LINE - GAUGE TO VALVE

REF. NO.	PART NUMBER	DESCRIPTION
34	891 300 C1	FITTING, socket (used with Auxiliary Instruments) *
35	891 299 C1	HOSE (Used with Auxiliary Instruments) *
36	145 705 H1	GROMMET (used with Auxiliary Instruments) *
37	188 328 H1	GAUGE, transmission clutch pressure (used with Auxiliary Instruments) *
	117 275 H1	CLAMP, converter vent to trans. breather (2)
	181 336	5/16NF x 3/4" BOLT (2)
	103 320	5/16" lock WASHER (2)
	103 025	5/16NF hex NUT (2)
	417 199 C2	TUBE, bulk 3/8" x 50 feet

* - Also listed and illustrated in Section 11.

MEMORANDA

TRANSMISSION AND TORQUE CONVERTER LINES
U001176 and up
C001196 and up

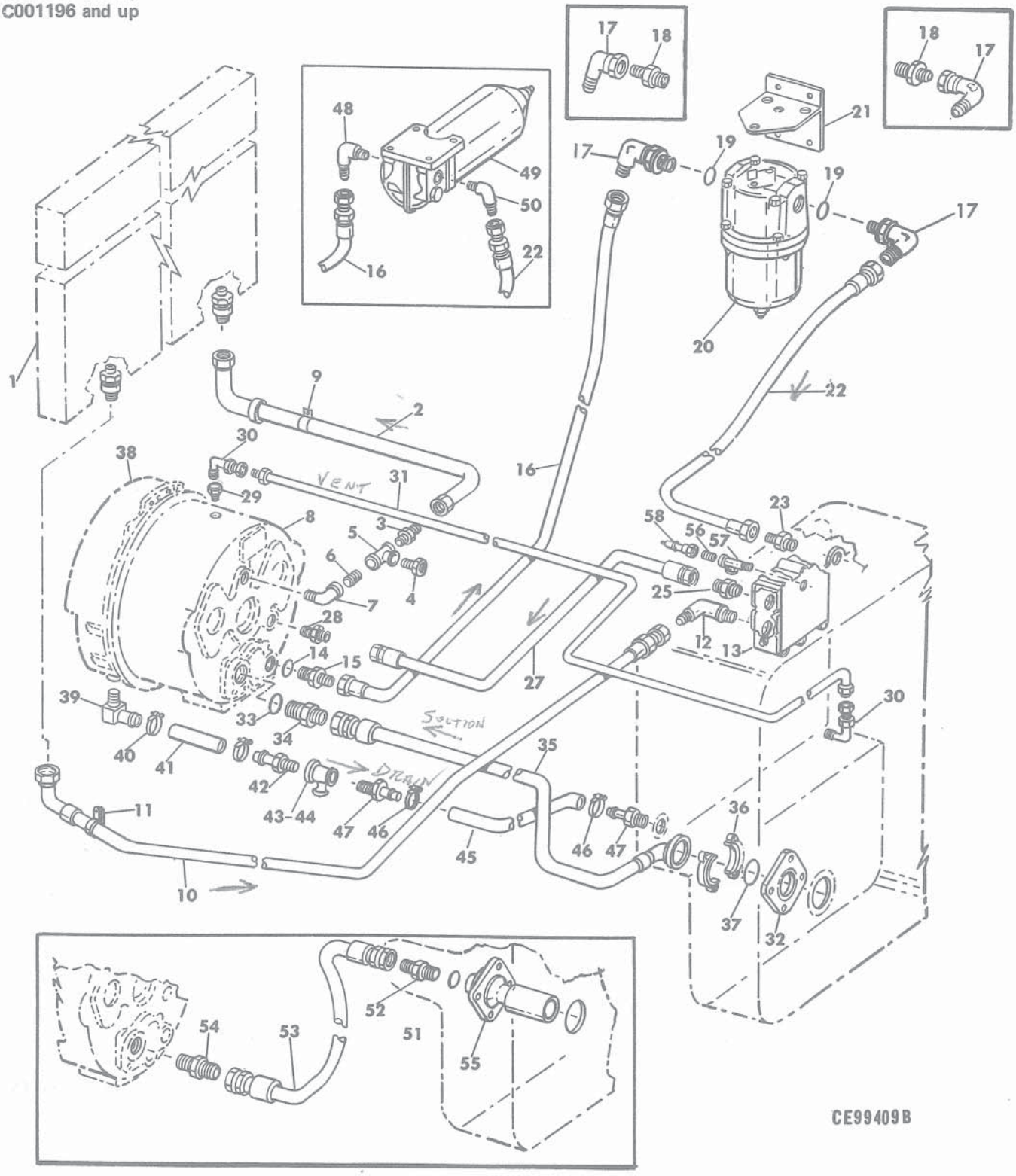

PRINTED IN UNITED STATES OF AMERICA

REF. NO.	PART NUMBER	DESCRIPTION
		TRANSMISSION AND TORQUE CONVERTER LINES - Continued U001176 and up C001196 and up
		LINE - CONVERTER TO COOLER
1		COOLER, oil (See Oil Cooler in Section 6)
2	884 070 C1	HOSE
3	9 402 713	ADAPTER
4	21 113 R1	BUSHING (Used with ELBOW, 892 495 C1)
5	115 237	TEE (Used with ELBOW, 892 495 C1)
5	187 560	TEE (Used with ELBOW, 108 687)
6	127 874	BUSHING
7	892 495 C1	ELBOW * and below
7	108 687	ELBOW * and up
8		HOUSING, torque converter (See Torque Converter in this Section)
9	142 846 H1	CLAMP, hose to frame
	181 315	BOLT
	106 261	WASHER, flat
	120 380	WASHER, lock
	103 024	NUT
		LINE - COOLER TO TRANSMISSION
10	884 071 C1	HOSE, cooler to transmission
11	142 846 H1	CLAMP, hose to frame
	181 315	BOLT
	106 261	WASHER, flat
	120 380	WASHER, lock
	103 024	NUT
12	9 402 869	ELBOW, 90°
13		VALVE, main regulator (See Main Regulator Valve in this Section)
		LINE - CONVERTER TO FILTER **LINE - FILTER TO MAIN REGULATOR VALVE**
14	296 247 R1	"O" RING
15	380 633 R1	CONNECTOR
16	884 137 C1	HOSE
17	9 410 283	ELBOW (2) U001708 and below C001720 and below
17	702 932 C1	ELBOW (2) U001709 and up C001721 and up
		LINE - CONVERTER TO FILTER **LINE - FILTER TO MAIN REGULATOR VALVE - Continued**
18	875 684 C1	ADAPTER (2) U001180 to 1708 C001229 to 1720
19	877 691 C1	"O" RING (2) U001180 and up C001229 and up
20		FILTER, converter (See Converter Line Oil Filter in this Section) U001180 and up C001229 and up
	120 384	WASHER, lock (2)
	24 861 R1	BOLT (2)
21	921 762 C1	BRACKET U001180 to 1708 C001229 to 1720
21	1 102 124 C1	BRACKET U001709 and up C001721 and up
	181 339	BOLT
	615 031 R1	WASHER, flat (4)
	120 214	WASHER, lock (4)
22	134 151 H1	HOSE, filter to valve U001180 and up C001229 and up
22	132 051 H1	HOSE, filter to valve U001180 and up C001229 and up
23	606 367 C1	CONNECTOR
		LINE - CONTROL VALVE TO CONVERTER
25	9 402 711	CONNECTOR
27	884 135 C1	HOSE, valve to converter
28	606 367 C1	CONNECTOR
		LINE - CONVERTER VENT TO TRANSMISSION BREATHER
29	144 048	BUSHING, reducer
30	42 411 D	ELBOW w/o NUT (2)
	414 505 C1	INSERT

* - Serial Number Not Available.

REF. NO.	PART NUMBER	DESCRIPTION

TRANSMISSION AND TORQUE CONVERTER LINES - Continued
U001176 and up
C001196 and up

LINE - CONVERTER VENT TO TRANSMISSION BREATHER — Continued

31		TUBE w/o NUTS - cut length 3/8 O.D. x 72" long cut from Bulk Tube 417 199 C1
	37 165 D	NUT, tube (2)
	117 275 H1	CLAMP (2)
	181 336	BOLT (2)
	120 214	WASHER, lock (2)
	103 025	NUT (2)

LINE - SUCTION, TRANSMISSION TO CONVERTER

32		ADAPTER, filter flange (See Transmission in Section 4)	U001180 and up
33	301 016 R1	"O" RING	U001180 and up
34	9 410 209	ADAPTER	U001180 and up
35	924 903 C1	HOSE	U001180 and up
36	300 525 R1	CLAMP (2)	U001180 and up
	24 862 R1	BOLT (4)	
37	876 077 C1	"O" RING	U001180 and up

DRAIN LINE - FLYWHEEL HOUSING TO TEE

38		HOUSING, flywheel (Refer to EPC-817B Engine Manual)
39	610 612 C1	ELBOW
40	279 027 R91	CLAMP (2)
41	327 074 R2	HOSE
42	196 274 H1	ADAPTER, straight

DRAIN LINE - CONVERTER TO TRANSMISSION

43	186 553	TEE
44	191 492	NIPPLE
45		HOSE (cut length 1-1/2"ID x 23" long) (Cut from bulk hose, 313 247 R1)
46	279 027 R91	CLAMP (2)
47	921 206 C1	ADAPTER, straight
47A	921 205 C1	ELBOW

LINE - CONVERTER TO FILTER
LINE - FILTER TO MAIN REGULATOR VALVE

48	9 402 867	ELBOW, 90°	U001176 thru 01179 C00* and below
49		FILTER, converter line oil (See (Converter Line Oil Filter in this Section)	U001176 thru 01179 C00* and below
	181 340	BOLT, 5/16NF x 1-1/8" (4)	
	615 031 R1	WASHER, 5/16" flat (4)	
	103 320	WASHER, 5/16" lock (4)	
	103 025	NUT, 5/16"NF hex (4)	
50	9 402 828	ELBOW, 45°	U001176 thru 01179 C00* and below

LINE - SUCTION, TRANSMISSION TO CONVERTER

51	296 247 R1	"O" RING	U001176 thru 01179 C00* thru 01228
52	9 410 207	ADAPTER	U001176 thru 01179 C00* thru 01228

* - Serial number not available

PRINTED IN UNITED STATES OF AMERICA

REF. NO.	PART NUMBER	DESCRIPTION

TRANSMISSION AND TORQUE CONVERTER LINES - Continued
U001176 and up
C001196 and up

LINE - SUCTION, TRANSMISSION TO CONVERTER

REF. NO.	PART NUMBER	DESCRIPTION
53	884 134 C1	HOSE U001176 thru 01179 C00* thru 01228
54	9 402 713	CONNECTOR U001176 thru 01179 C00* thru 01228
55		FILTER, oil (See Transmission in this Section)

QUICK CONNECTIVE

REF. NO.	PART NUMBER	DESCRIPTION
56	105 404	NIPPLE
57	113 169 H1	TEE
58	342 775 R91	CAP, quick connective
	417 199 C1	TUBE, 3/8" O.D. x 50 feet long
	313 247 R1	HOSE, bulk 1-1/2" I.D. x 15 ft. (#) (x)

* - Serial number not available.
(#) - Part number and price covers one foot of bulk item.
x - As required.

TRANSMISSION CONTROL GEARSHIFT LINKAGE

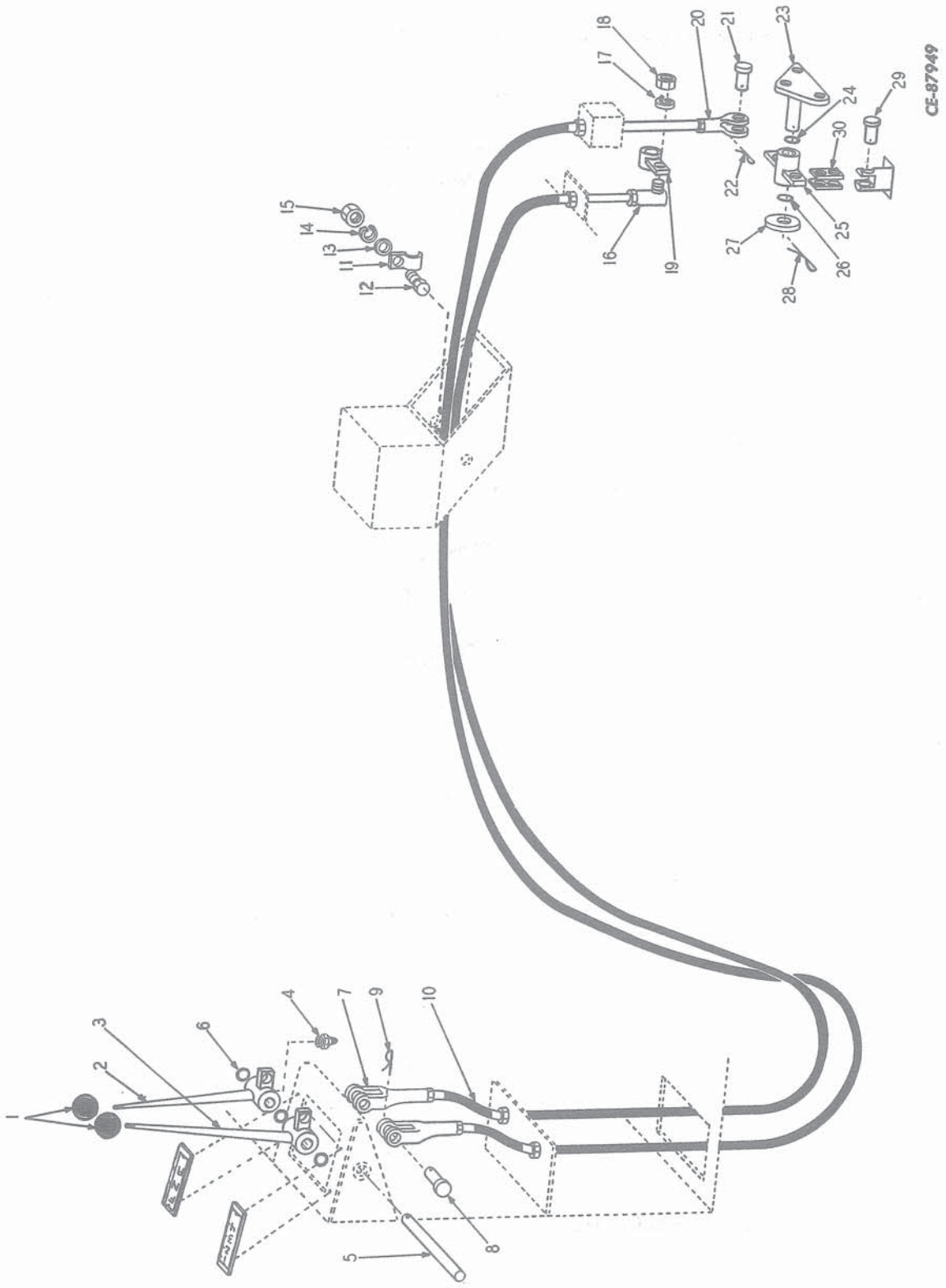

PRINTED IN UNITED STATES OF AMERICA

REF. NO.	PART NUMBER	DESCRIPTION
		TRANSMISSION CONTROL GEARSHIFT LINKAGE - Continued
1	HL-3343	KNOB (2)
2	214 111 H1	LEVER, forward and reverse w/two BUSHING, 144 244 H1
3	214 113 H1	LEVER, range w/two BUSHING, 144 244 H1
4		NOT USED
5	213 835 H1	PIN
	181 348	5/16NF x 2-1/4" BOLT
	19 503 R1	5/16-24NF Esna NUT
6	293 739 R1	"O" RING (4)
7	104 037	YOKE, end - 5/16 (2)
8	114 784	CLEVIS (2)
9	103 374	PIN, cotter (2)
10	213 356 H1	CABLE, control (2)
11	143 142 H1	CLAMP, fitted to front hydraulic manifold (2)
12	181 339	BOLT, 5/16NF x 1" (2)
13	25 543 R1	WASHER, flat (2)
14	120 214	WASHER, lock (2)
15	103 025	NUT (2)
16	158 396 H1	BALL JOINT, range shift
17	120 214	WASHER, lock
18	103 025	NUT, 5/16"NF hex
19	214 188 H1	LEVER
20	104 037	YOKE, end - forward and reverse shift - 5/16
21	114 784	CLEVIS
22	103 374	PIN, cotter
23	214 198 H1	SUPPORT, bellcrank mounting
	24 842 R1	BOLT (3)
	214 192 H1	SPACER
24	307 915 R1	"O"RING, between support and bellcrank
25	214 193 H1	BELLCRANK, w/two BUSHING 144 244 H1
26	307 915 R1	"O" RING, between flatwasher and bellcrank
27	103 348	WASHER, flat - 1 (X)
28	103 397	PIN, cotter - 5/32 x 1-1/4"
29	114 787	CLEVIS (2)
	103 375	PIN, cotter (2)
30	153 996 H1	LINK (2)
	144 244 H1	BUSHING (6)

TRANSMISSION MOUNTING

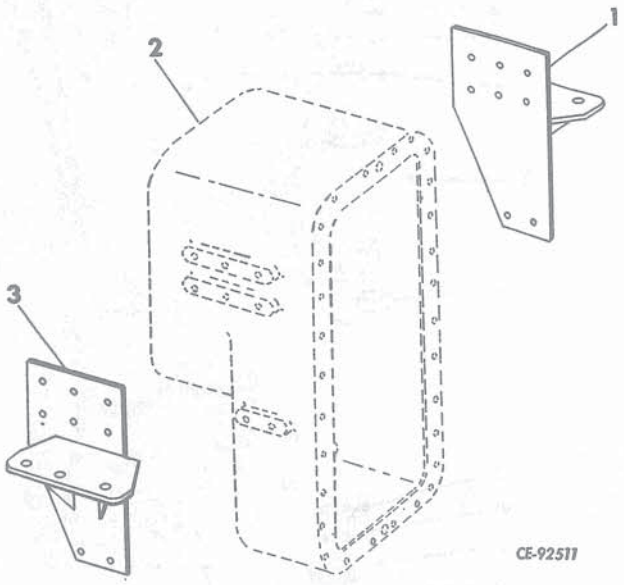

1	884 015 C1	SUPPORT, L.H. transmission mounting
	24 897 R1	BOLT, 3" long (3)
	24 874 R1	BOLT, 1-3/4" long (8)
	25 557 R1	WASHER, 3/4" flat (6)
	25 537 R1	WASHER, 5/8" lock (8)
	9 413 983	NUT (3)
2		TRANSMISSION (See Transmission in this section)
3	884 016 C1	SUPPORT, R.H. transmission mounting
	24 892 R1	BOLT, 3" long (3)
	24 874 R1	BOLT, 1-3/4" long (8)
	25 557 R1	WASHER, 3/4" flat (6)
	25 537 R1	WASHER, 5/8" lock (8)
	9 413 983	NUT (3)

(X) - As Required.

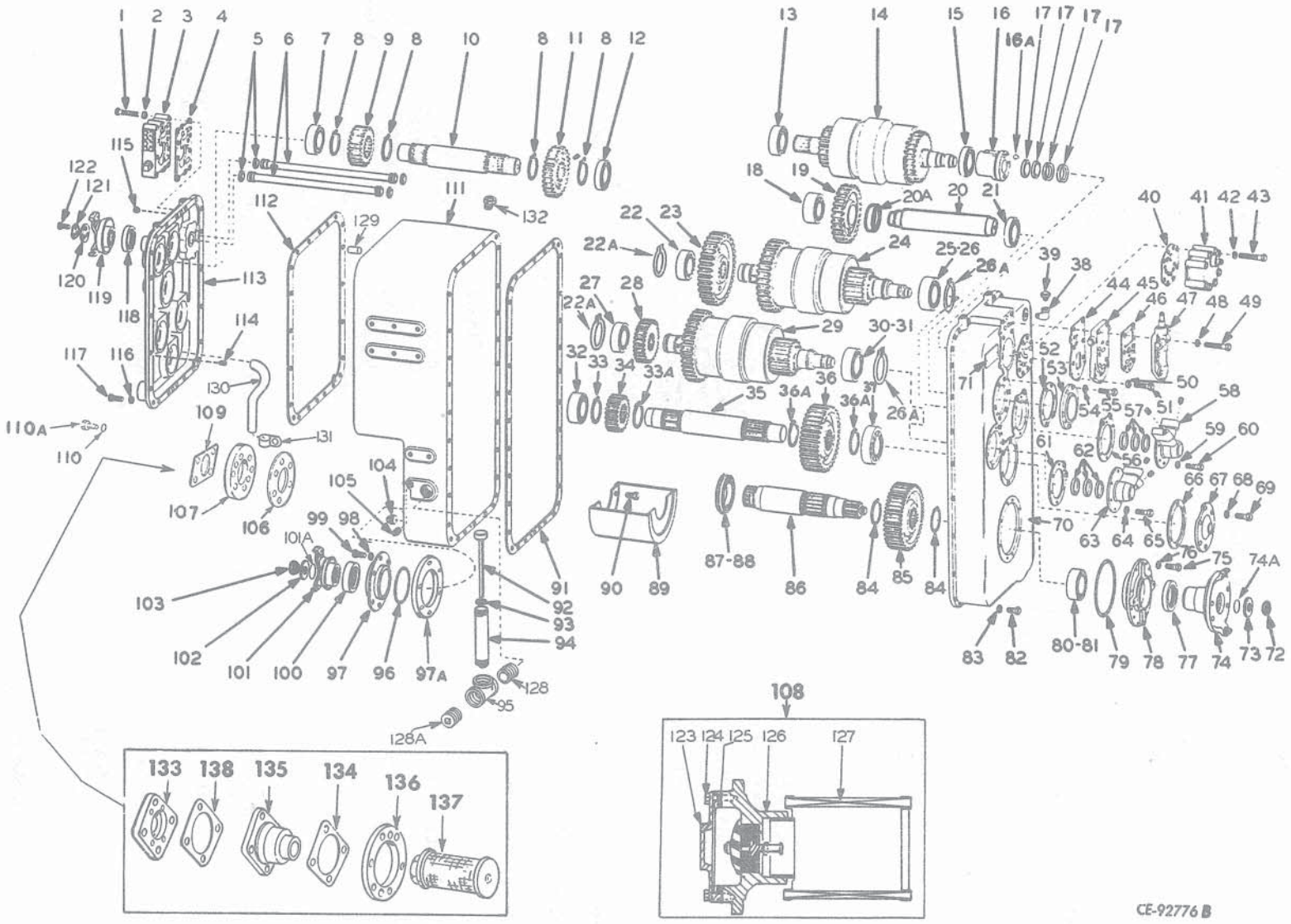
1 2 3 4 5 6 7 8 9 8 10 8 11 8 12 13 14 15 16 16A 17 17 17 17
115 122 121 120 119 118 113 114 117 116 112 129 111 132
18 19 20A 20 21 22 23 22A 24 25-26 26A 27 28 22A 29 30-31 32 33 34 33A 35 36A 36 36A 37 26A
39 38 40 41 42 43 44 45 46 47 48 49 50 51 52 53 54 55 57 58 59 60 61 62 56 66 67 68 69 63 64 65 70 71 76 75 74A 74 73 72 77 78 79 80-81 82 83
110A 110 109 107 106 131 130 104 105 99 98 101A 103 102 101 100 97 96 97A 91 92 93 94 128 95 128A
90 89 87-88 86 84 85 84
133 138 135 134 136 137
108
123 124 125 126 127
CE-92776 B

TRANSMISSION - Continued

REF. NO.	PART NUMBER	DESCRIPTION
	878 225 C95	TRANSMISSION (P-2004) U001179 and below C001228 and below (Order the following - 1 TRANSMISSION 894 117 C92; 1 "O" RING 876 007 C1; 2 CLAMPS 215 014 H1; 4 BOLT 894 921 C1; 1 HOSE 924 903 C1; 1 ADAPTER 9 410 209; 1 "O" RING 301 016 R1; 1 ADAPTER 380 633 R1; 1 "O" RING 296 247 R1; 1 PUMP 921 806 C1)
	894 117 C92	TRANSMISSION (P-2004) U001180 and up C001229 and up
1	179 851	BOLT, 3/8NC x 3" (11)
2	103 321	WASHER, 3/8" lock (11)
3		VALVE, main regulator (See Main Regulator Valve in this Section)
4		SOCKET (See Main Regulator Valve in this Section)
5	254 954 R1	"O" RING, (%) (4)
6	191 122 H1	TUBE, oil transfer (2)
7	659 347 R91	BEARING
8	324 738 R1	RING, retaining (4)
9	213 336 H1	GEAR, 19T
10	156 377 H1	SHAFT, reverse idler
11	213 337 H1	GEAR, 25T
12	613 690 C91	BEARING
13	883 317 C91	BEARING
14		CLUTCH PACK, forward and reverse (See Clutch Group forward and reverse in this Section)
15	613 690 C91	BEARING
16	156 341 H1	COVER w/DOWEL PIN 159 897 H1
16A	159 845 H1	PIN, dowel
17	878 116 C1	RING, seal (%) (4)
18	156 901 H1	BEARING
19	213 320 H1	GEAR, main idler, 29T
20	877 603 C1	SHAFT, main idler
20A	877 602 C1	SPACER
21	ST-265	BEARING
22	659 347 R1	BEARING
22A	300 026 R1	RING, snap (2)
23	213 323 H2	GEAR, 38T
24		CLUTCH PACK (See Clutch Group 1st and 3rd, 2nd and 4th in this Section)
25	291 841 R91	BEARING, race and rollers
26	174 346 H1	BEARING, inner race
26A	114 349 H1	RING, snap (2)
27	659 347 R91	BEARING
28	213 319 H1	GEAR, 21T
29		CLUTCH PACK (See Clutch Group 1st and 3rd, 2nd and 4th in this Section)
30	291 841 R91	BEARING, race and rollers
31	174 346 H1	BEARING, inner race
32	659 347 R91	BEARING
33	214 876 H1	SPACER
33A	214 877 H1	SPACER
34	213 318 H1	GEAR, 17T
35	214 878 H1	SHAFT, gather
36	213 321 H1	GEAR, 33T
36A	324 738 R1	RING (2)
37	156 878 H1	BEARING
38	444 258	TEE
39	131 586 H1	BREATHER
40		GASKET (See Range Selector Valve in this Section)
41		VALVE, range selector (See Selector Valve in this Section)
42	103 320	WASHER, 5/16" lock (8)

(%) - Also part of KIT 875 492 C92

TRANSMISSION - Continued

REF. NO.	PART NUMBER	DESCRIPTION
43	179 830	BOLT, 5/16NC x 3 (8)
44		GASKET (See Neutral Knockdown Valve in this Section)
45		VALVE, neutral knockdown (See Neutral Knockdown Valve in this Section)
46		GASKET (See Forward and Reverse Valve in this Section)
47		VALVE, forward and reverse (See Forward and Reverse Valve in this Section)
48	103 321	WASHER, 3/8 lock (6)
49	179 851	BOLT, 3/8NC x 3" (6)
50	103 321	WASHER, 3/8" lock (3)
51	179 840	BOLT, 3/8NC x 1-1/8" (3)
52	156 257 H1	GASKET (#)
53	156 375 H1	RETAINER, bearing
54	103 321	WASHER, 3/8" lock (6)
55	179 840	BOLT, 3/8NC x 1-1/8" (6)
56	156 330 H1	GASKET (#)
57	878 116 C1	RING, seal (%) (4)
58	878 108 C1	COVER
59	103 321	WASHER, 3/8" lock (6)
60	179 840	BOLT, 3/8NC x 1-1/8" (6)
61	156 330 H1	GASKET (#)
62	878 116 C1	RING, seal (%) (4)
63	878 108 C1	COVER
64	103 321	WASHER, 3/8" lock (6)
65	179 840	BOLT, 3/8NC x 1-1/8" (6)
66	156 367 H1	GASKET (#)
67	878 109 C1	RETAINER, bearing
68	103 321	WASHER, 3/8" lock (6)
69	179 839	BOLT, 3/8NC x 1" (6)
70		COVER, rear (For components see Rear Cover in this Section)
71	887 529 C1 123 250 H1	PLATE, name SCREW, plate (2)
72	215 617 R1	NUT, self-locking
73	194 293 H1	RETAINER
74	194 279 H2	YOKE
74A	702 283 R1	GASKET, yoke (#)
75	179 839	BOLT, 3/8NC x 1" (8)
76	103 321	WASHER, 3/8" lock (8)
77	194 292 H1	SEAL, oil (*)
78	875 479 C1	RETAINER
79	22 417 R1	"O" RING (%)
80	875 453 C91	CONE
81	104 577 H1	CUP
82	179 841	BOLT, 3/8NC x 1-1/4" (29)
83	103 321	WASHER, 3/8" lock (29)
84	324 738 R1	RING, retaining (2)
85	213 322 H1	GEAR, 34T
86	875 482 C2	SHAFT, output
87	875 453 C91	CONE
88	104 577 H1	CUP
89	156 305 H1	BAFFLE, oil
90	156 894 H1	SCREW, cap (3)
91	156 329 H1	GASKET, rear cover (#)
92	154 090 H1	DIPSTICK
93	134 045 H1	SEAL (*)
94	154 092 H2	PIPE
95	144 081	TEE
96	22 285 R1	"O" RING (%)
97	875 480 C1	RETAINER
97A	875 476 C1	SHIM, retainer - .004"
97A	875 477 C1	SHIM, retainer - .007"

(#) - Also part of KIT 195 559 H2
(*) - Also part of KIT 195 558 H2
(%) - Also part of KIT 875 492 C92

PRINTED IN UNITED STATES OF AMERICA

TRANSMISSION - Continued

REF. NO.	PART NUMBER	DESCRIPTION
97A	875 478 C1	SHIM, retainer - .020"
98	103 321	WASHER, 3/8" lock (6)
99	179 839	BOLT, 3/8NC x 1" (6)
100	194 292 H1	SEAL, oil (*)
101	194 279 H2	YOKE
101A	702 283 R1	GASKET, yoke (#)
102	194 293 H1	RETAINER
103	215 617 R1	NUT, stop
104	20 969 R1	PLUG, pipe 3/4"
105	445 686	PLUG, pipe 3/8"
106	927 534 C1	GASKET, retainer (#)
107	877 588 C1 379 446 R1	RETAINER, filter BOLT (4)
108	214 187 H1	FILTER, oil U001179 and below C001228 and below
109	169 206 H1	GASKET, filter U001179 and below C001228 and below
110	103 323	WASHER, lock 1/2" (4)
110 A	179 883	BOLT, 1/2NC x 1-1/4" (4) U001179 and below C001228 and below
111	162 408 H1	HOUSING
112	156 398 H1	GASKET, front cover (#)
113	883 174 C1	COVER, front
114	444 709	PLUG, pipe 3/4" (2)
115	444 600	PLUG, pipe 1"
116	103 321	WASHER, 3/8" lock (20)
117	179 481	BOLT, 3/8NC x 1-1/4" (20)
118	333 996 R92	SEAL, oil (*)
119	159 900 H1	FLANGE, input
120	156 361 H1	WASHER, retainer
121	156 362 H1	PLATE, locking
122	179 838	BOLT, 3/8NC x 7/8" (3)
123	220 843 H1	FLANGE
124	876 428 C91	SCREW, cap (4)
125	285 723 R1	"O" RING
126	220 844 H1	VALVE
127	220 845 H1	ELEMENT
128	219 358	NIPPLE
128A	20 970 R1	PIPE, plug 1-1/4"
129	148 880 H1	DOWEL (4)
130	160 265 H1	TUBE
131	160 266 H1 875 907 C1	CLAMP 5/16DH x 1-1/2" BOLT WIRE, locking (16 ga. x 6" long) (Cut from bulk WIRE, 278 025 R1)
132	878 194 C1	ADAPTER, pick up to cover
133	894 904 C1	ADAPTER, flange U001180 and up C001229 and up
	21 456 R1 103 323	BOLT, (4) WASHER, 1/2" lock (4)
134	169 206 H2	GASKET, filter (#) U001180 and up C001229 and up
135	896 556 C2	VALVE, check U001180 and up C001229 and up
136	877 588 C1	RETAINER, filter U001180 and up C001229 and up

(#) - Also part of KIT 195 559 H2
(*) - Also part of KIT 195 558 H2
(%) - Also part of KIT 875 492 C92

REF. NO.	PART NUMBER	DESCRIPTION
		TRANSMISSION - Continued
137	921 574 C2	STRAINER, filter U001180 and up C001229 and up
138	930 331 C1	GASKET U001180 and up C001229 and up
	352 221 R1	"O" RING (Clutch Pack Cover) (%) (4)
	355 967 R1	"O" RING (Between Clutch Shaft Oil Supply Cap and Rear Main Housing)
	876 783 C91	RETAINER 875 480 C1 w/CUP 104 577 H1 and OIL SEAL 194 292 H1
	876 782 C91	RETAINER 875 479 C1 w/CUP 104 577 H1 and OIL SEAL 194 292 H1
	278 027 R1	WIRE, bulk locking (16 ga. x 50 ft)

(%) - Also part of KIT 875 492 C92

TRANSMISSION REAR COVER

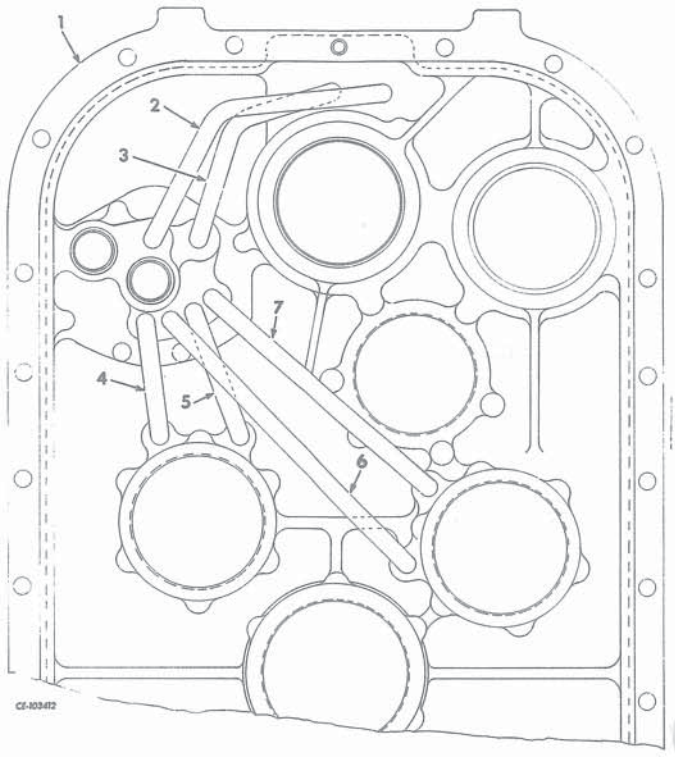

REF. NO.	PART NUMBER	DESCRIPTION
	156 328 H6	COVER, rear (Consists of the following parts -
1		COVER (Not furnished separately)
2	159 881 H2	TUBE, forward and reverse main
3	159 882 H2	TUBE, forward and reverse lube
4	159 854 H2	TUBE, first
5	159 859 H2	TUBE, third
6	160 004 H2	TUBE, second
7	159 864 H2	TUBE, fourth

PRINTED IN UNITED STATES OF AMERICA

CLUTCH GROUP (FORWARD AND REVERSE)

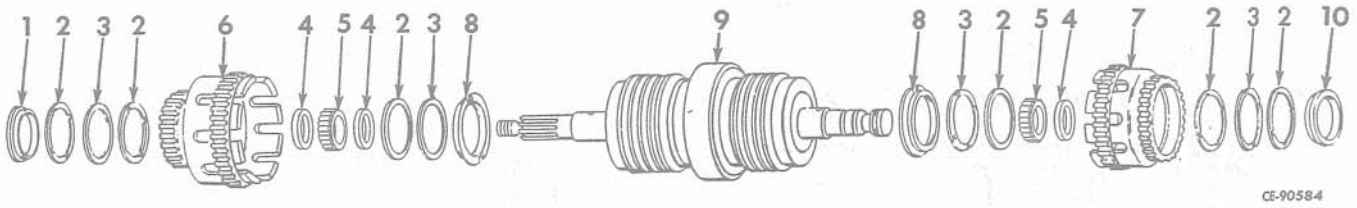

REF. NO.	PART NUMBER	DESCRIPTION
1	883 313 C1	SPACER
2	156 899 H1	SPACER (6)
3	156 324 H1	WASHER, thrust (4)
4	216 957 H1	SPACER (3)
5	324 490 R91	BEARING (2)
6	212 834 H1	GEAR
7	212 832 H1	GEAR
8	163 458 H2	SPACER (2)
9		CLUTCH ASSEMBLY, forward and reverse (See Basic Clutch Pack in this Section)
10	157 033 H1	SPACER
11	287 049 R1	SNAPRING, external

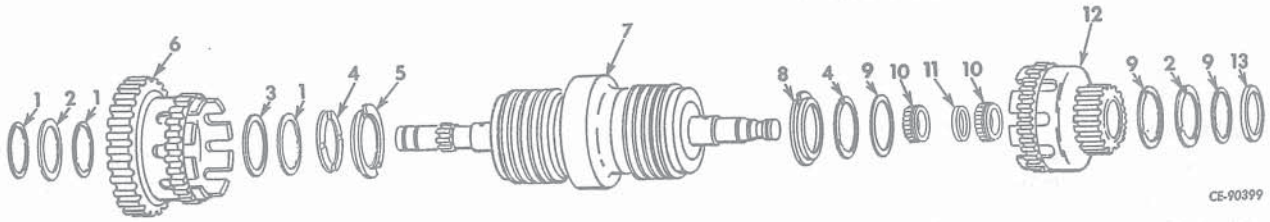

CLUTCH GROUP (1st AND 3rd, 2nd AND 4th)

REF. NO.	PART NUMBER	DESCRIPTION
		CLUTCH GROUP (1st and 3rd) (Includes items 1 thru 13)
		CLUTCH GROUP (2nd and 4th) (Includes items 1 thru 13)
1	216 929 H1	SPACER (3)
2	216 930 H1	WASHER, thrust (2)
3	216 932 H1	BEARING
4	324 437 R1	WASHER, thrust (2)
5	216 928 H1	SPACER
6	212 831 H1	GEAR
7		CLUTCH ASSY (See Basic Clutch Pack, 1st and 3rd, 2nd and 4th in this Section)
8	216 927 H1	SPACER
9	216 931 H1	SPACER (3)
10	216 933 H1	BEARING (2)
11	216 934 H1	SPACER
12	212 833 H2	GEAR
13	216 935 H1	SPACER

REF. NO.	PART NUMBER	DESCRIPTION

BASIC CLUTCH PACK

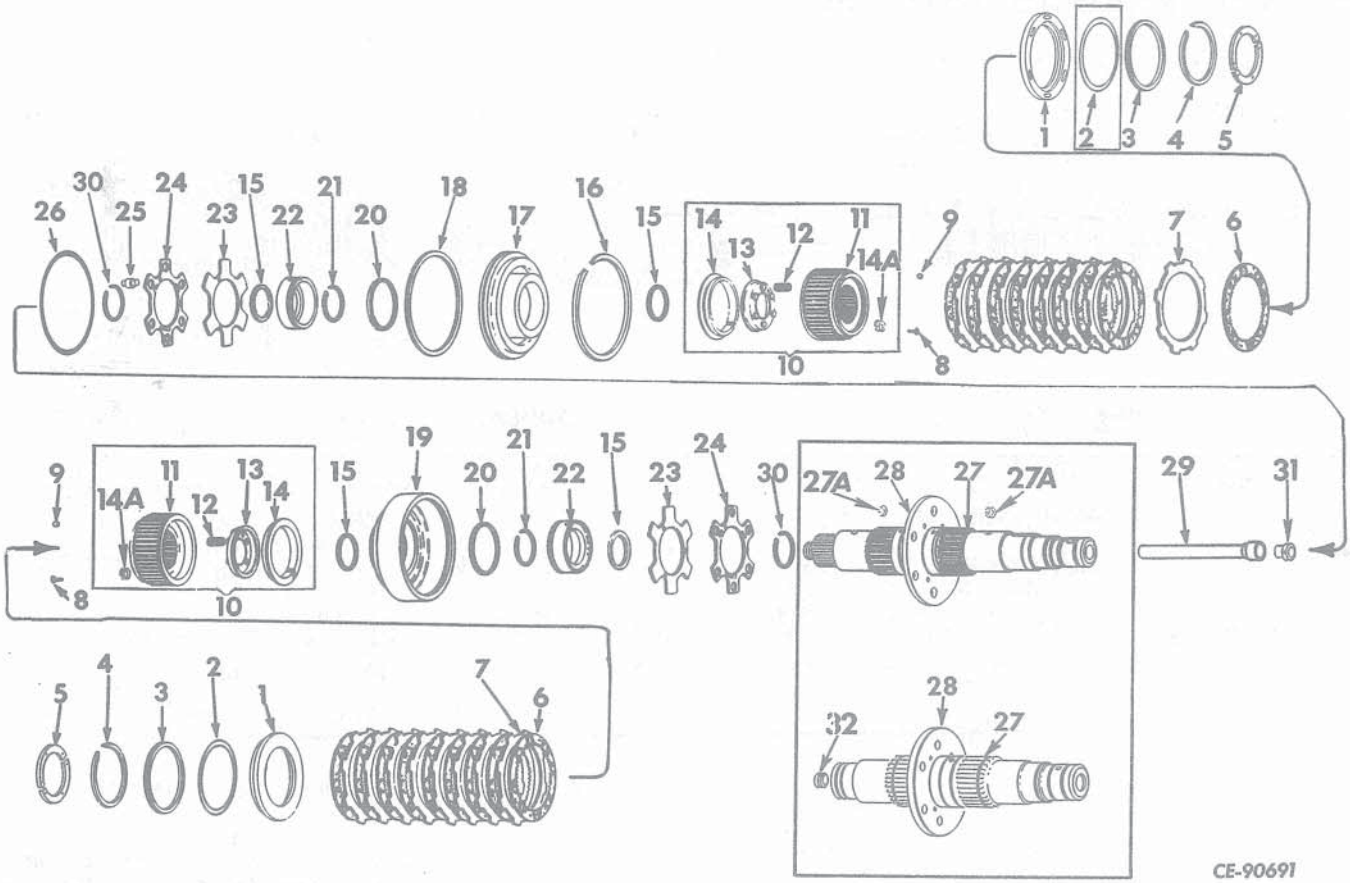

CE-90691

REF. NO.	PART NUMBER	DESCRIPTION
	922 909 C92	CLUTCH PACK ASSEMBLY (forward and reverse) (Consists of items 1 thru 31)
	922 883 C92	CLUTCH PACK ASSEMBLY (1st and 3rd - 2nd and 4th) (Consists of items 1 thru 32) (2)
1	877 623 C1	PLATE, backing (2) U001277 and below C001251 and below (Order the following parts - 1 BACKING PLATE 627 405 C1 1 SNAP RING 627 406 C1 1 SNAP RING 627 407 C1 1 HUB 627 582 C1 or 1 HUB 922 884 C91)
1	627 405 C1	PLATE, backing (2) U001278 and up C001252 and up
2		NOT USED
3	324 469 R1	RING, snap (internal) (2) U001277 and below C001251 and below
3	627 407 C1	RING, snap (internal) (2) U001278 and up C001252 and up
4	877 625 C1	RING, snap (external) (2) U001277 and below C001251 and below
4	627 406 C1	RING, snap (external) (2) U001278 and up C001252 and up
5	189 340 H2	RETAINER, clutch (forward and reverse) (4)
5	216 946 H1	RETAINER (1st and 3rd, 2nd and 4th) (4)
6	702 874 C1	PLATE, internal spline clutch (Bronze) (When PLATE, 157 021 H1 is required, order twenty-two PLATE, 702 874 C1) (11) 1st Gear (11) 2nd Gear (11) 3rd Gear (11) 4th Gear (11) Forward (11) Reverse
7	156 320 H1	PLATE, external spline clutch (Steel) (11) 1st Gear (11) 2nd Gear (11) 3rd Gear (11) 4th Gear (11) Forward (11) Reverse

REF. NO.	PART NUMBER	DESCRIPTION
BASIC CLUTCH PACK - Continued		
8	189 339 H1	BOLT, 5/16" - 18 x .406 special (4)
9	327 178 R1	PIN, dowel (2) U001277 and below C001251 and below
10	877 622 C91	CLUTCH HUB ASSEMBLY (forward and reverse) (2) U001277 and below C001251 and below (Order the following parts - 1 HUB 627 582 C1 1 PLATE BACKING 627 405 C1 1 SNAP RING 627 406 C1 1 SNAP RING 627 407 C1)
10	1 110 895 C1	CLUTCH HUB ASSEMBLY (Replaces 627 582 C1) (Forward and reverse) (2) U001278 and up C001252 and up
10	877 620 C91	CLUTCH HUB ASSEMBLY (1st and 3rd, 2nd and 4th) (2) U001277 and below C001251 and below (Order the following parts - 1 HUB 922 884 C91 1 PLATE BACKING 627 405 C1 1 SNAP RING 627 406 C1 1 SNAP RING 627 407 C1
10	922 884 C92	CLUTCH HUB ASSEMBLY (1st and 3rd, 2nd and 4th) (2) U001278 and up C001252 and up
11		HUB, clutch (Not Furnished Separately) (2)
12		SPRING (Not furnished separately) (18)
13		RETAINER, spring (Not furnished separately) (2)
14		RETAINER, plate (Not furnished separately) (2)
14A	17 143 R1	PIN
15	324 489 R3	SEAL, ring (forward and reverse) (**) (4)
15	216 938 H1	SEAL, ring (1st and 3rd, 2nd and 4th) (##) (4)
16	156 897 H1	RING, internal
17	156 316 H1	PISTON, clutch (forward and reverse)
17	216 943 H1	PISTON, clutch (1st and 3rd, 2nd and 4th)
18	157 255 H1	SEAL (**) (##) (%)
19	156 317 H1	HOUSING, piston (forward and reverse)
19	216 944 H1	HOUSING, piston (1st and 3rd, 2nd and 4th)
20	324 488 R2	RING, seal (forward and reverse) (**) (2)
20	216 942 H1	RING, seal (1st and 3rd, 2nd and 4th) (##) (2)
21	156 896 H1	RING, external snap (forward and reverse) (2)
21	220 646 H1	RING, external snap (1st and 3rd, 2nd and 4th) (#) (2)
22	338 500 R1	PISTON, accelerating (forward and reverse) (2)
22	216 941 H2	PISTON, accelerating (1st and 3rd, 2nd and 4th) (2)
23	163 425 H1	VALVE, disc (forward and reverse) (2)
23	216 939 H1	VALVE, disc (1st and 3rd, 2nd and 4th) (#) (2)
24	216 960 H1	DISC, reinforcing (forward and reverse) (2)
24	216 940 H1	DISC, reinforcing (1st and 3rd, 2nd and 4th) (2) (#)
25	610 485 C1	PIN, dowel (#) (3)
26	610 418 C1	RING, seal (**) (##) (%)
27	216 959 H1	SHAFT ASSEMBLY (forward and reverse)(Includes items 27A thru 31)
27	216 937 H1	SHAFT ASSEMBLY (1st and 3rd, 2nd and 4th)(Includes items 28 thru 32)
27A	153 336 H1	PIN, spring (Used with SHAFT 216 959 H1) (2)
28		PLATE, separator (#)
29		TUBE (Not furnished separately)
30	156 896 H1	RING, snap (forward and reverse) (2)
30	220 646 H1	RING, snap (1st and 3rd, 2nd and 4th) (#) (2)

(%) - Also part of KIT, 875 492 C92
(**) - Also part of KIT, 198 286 H1
(#) - Also part of KIT, 938 574 C1
(##) - Also part of KIT, 882 346 C91

REF. NO.	PART NUMBER	DESCRIPTION

BASIC CLUTCH PACK - Continued

31	163 418 H1	PLATE, oil inlet
32	194 363 H2	PLUG, pipe 1/2" - 14 (1st and 3rd, 2nd and 4th)
	198 286 H1	KIT, seal ring (forward and reverse) (Consists of - 1 SEAL, ring 610 418 R1 1 SEAL, ring 157 255 H1 2 SEAL, ring 156 315 H1 4 SEAL, ring 209 743 H1)
	882 346 C91	KIT, seal ring (1st and 3rd, 2nd and 4th) (Consists of - 1 SEAL, ring 610 418 R1 1 SEAL, ring 157 255 H1 4 SEAL, ring 216 938 H1 2 SEAL, ring 216 942 H1)
	938 574 C1	KIT, clutch separator plate (1st and 3rd, 2nd and 4th) (Consists of - 2 DISC, reinforcing 216 940 H1 3 PIN, dowel 610 485 C1 § 1 PLATE, separator 4 RING, snap 220 646 H1 2 VALVE, disc 216 939 H1)

§ - Not Furnished Separately.

PRINTED IN UNITED STATES OF AMERICA