OFFICE COPY

PAYLOADER®

TRACTOR-SHOVEL

model H-90

4-wheel drive

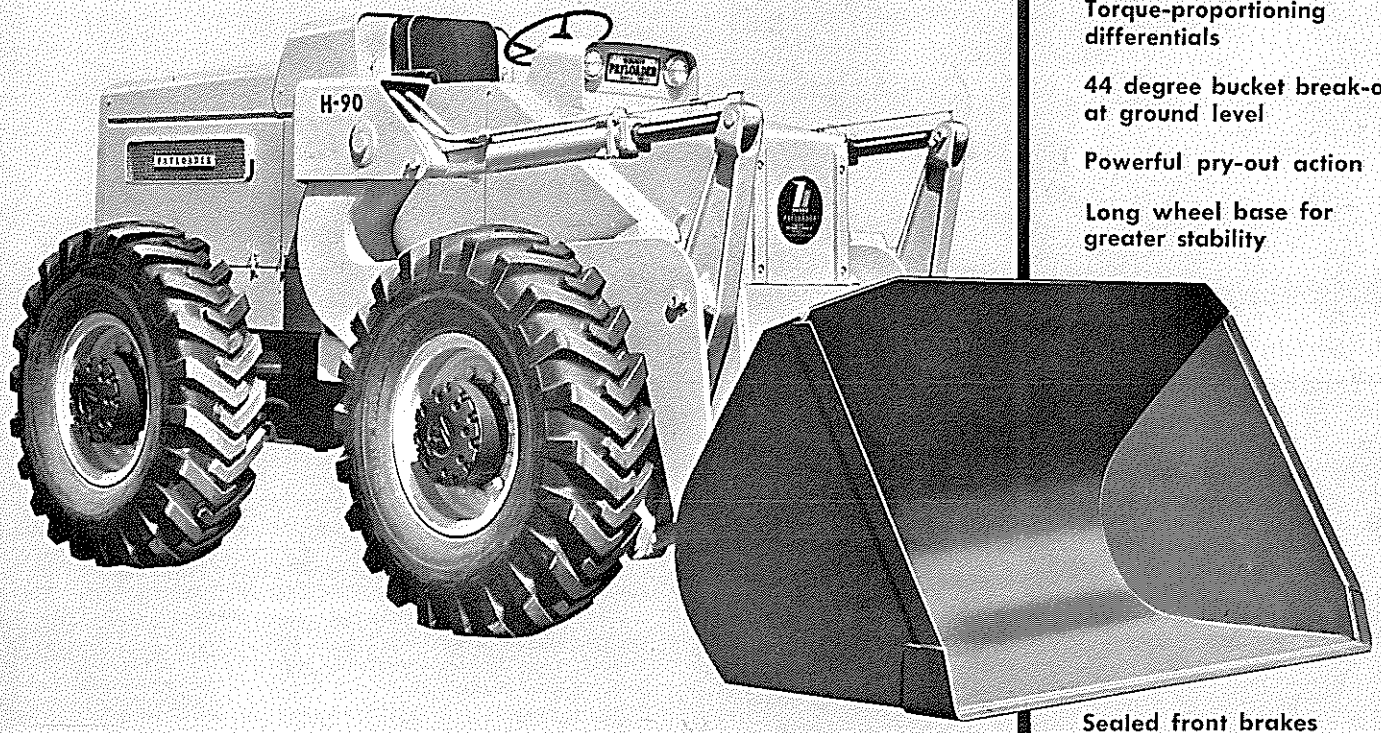

FEATURES

Complete power-shift transmission

Torque-converter drive

Planetary final drives

Torque-proportioning differentials

44 degree bucket break-out at ground level

Powerful pry-out action

Long wheel base for greater stability

Sealed front brakes

4-wheel hydraulic power boosted brakes

Power booster steering

Closed, pressure-controlled hydraulic system

22° steering axle oscillation

9000 Lbs.
Operating Capacity

1½ – 3 – 5
CUBIC YARD
S.A.E. RATED

SAY "HUFF"

Modern Materials Handling Equipment

THE FRANK G. HOUGH CO.

LIBERTYVILLE, ILLINOIS

SUBSIDIARY INTERNATIONAL HARVESTER COMPANY

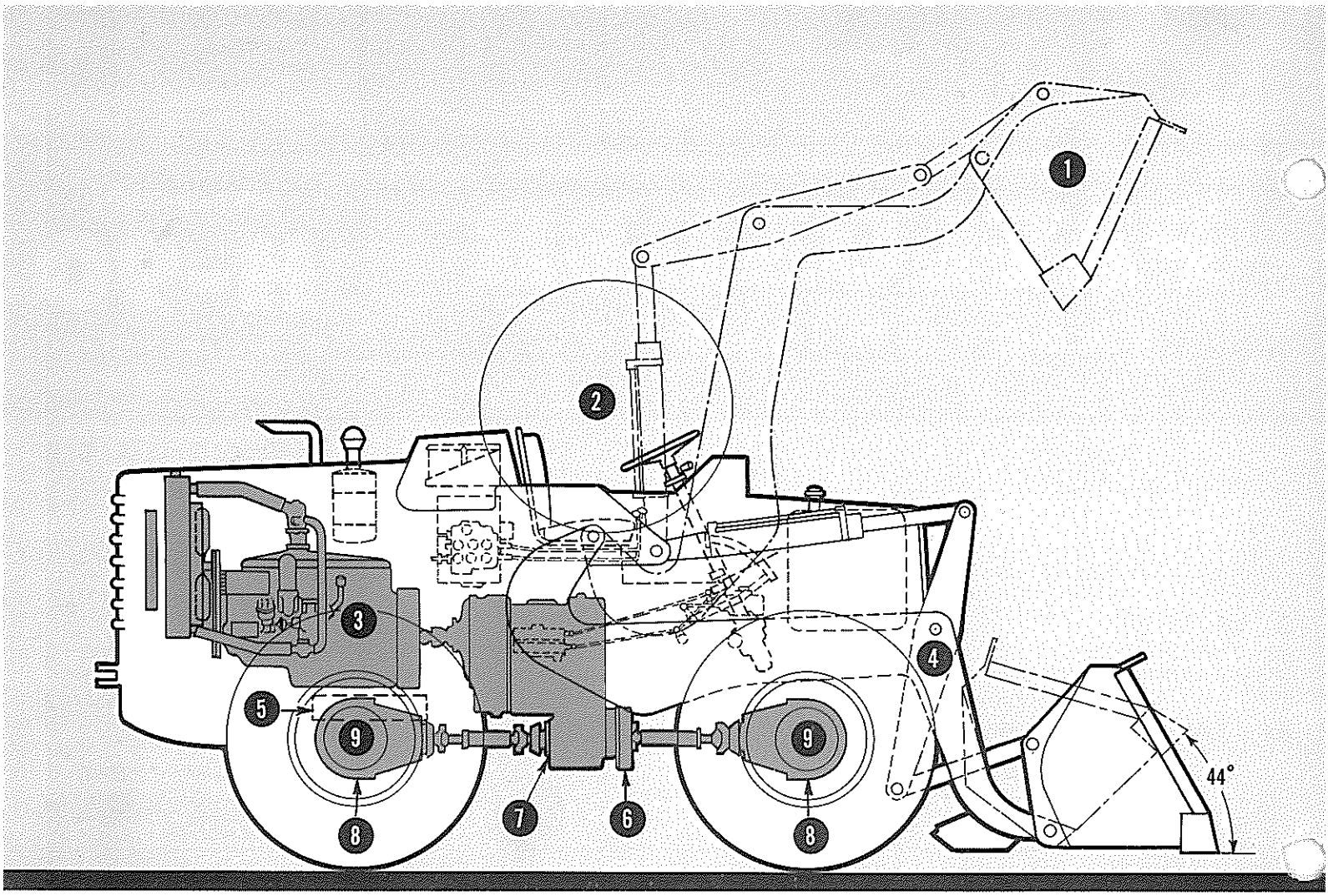

"NO-STOP" Power-Shift Transmission

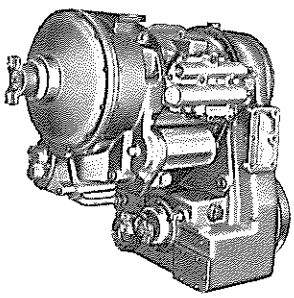

The full power-shift transmission used in this "PAYLOADER" is thoroughly proven in tractor-shovel service. It is three-speed, full-reversing, constant-mesh type with integral torque-converter. The hydraulic clutches are continuously pressure-filled, cooled and lubricated. All shifts — up or down in forward or reverse — can be made "on the go" — require no stopping for a "range" shift.

"Operator's Choice" Brake Control

On all other tractor-shovels, the transmission is disengaged when either of the dual foot-brakes are applied. But there are many times when it is desirable to maintain transmission engagement when braking. ***Only the*** "PAYLOADER" gives the operator his choice — left pedal disengages transmission while braking, right pedal applies brakes only.

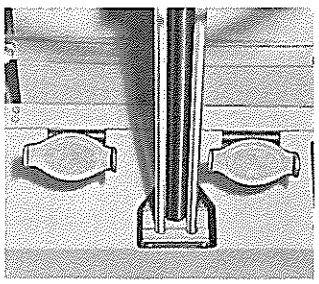

Separate Oil-Cooling Radiator

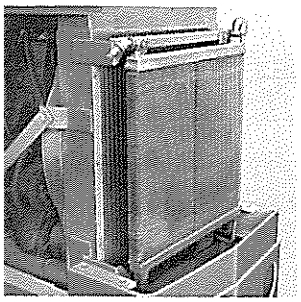

One of the reasons "PAYLOADER" units can stand up to sustained, continuous operation — even in hot climates — is because special attention has been given to the cooling of the transmission and torque-converter oil. This is accomplished with a separate "king-size" oil-to-air radiator through which the oil is continuously circulated.

Every PAYLOADER is Dynamometer Tested

Each and every "PAYLOADER" undergoes final testing on special chassis dynamometer equipment. Here it is operated in all gears under full load conditions while its actual output is measured by precision instruments. It must meet or exceed Hough's rigid standards before it can be released for shipment.

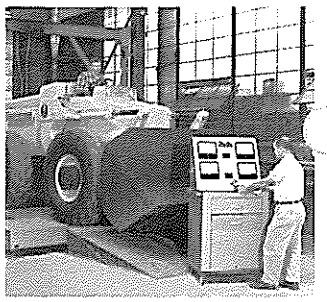

1 High-Lift, Positive Dumping

Maximum lifting height and reach are provided, consistent with stability and safe operation, to load large hauling units. Twin, double-acting hydraulic rams give precise control of dumping action — fast or slow, as desired. A full 50° bucket-dumping angle is provided.

2 Operator Safety

Distinctive underslung boom-arm design and positioning keep moving members out of operator's area at all times — eliminating the need for protective screens and giving operator fullest visibility when most needed.

3 Engines

You have a choice of heavy-duty engines for gasoline, diesel or LPG — all carefully matched to the weight and capacity of the machine—with more horsepower-per-pound of machine weight than many other heavier machines with larger engines.

4 Alloy Steel Structural Members

The liberal use of alloy steel in critical locations provides ample strength and reduces gross weight — makes more engine horsepower available for useful work.

5 Full Axle Oscillation

The rear [steering] axle is connected to the frame through a rugged cradle that allows full axle oscillation of 22 degrees. This permits working on rough, uneven ground with a minimum of "pitching" and frame strain.

6 Separate Parking Brake

The parking brake does not depend on any of the service brakes, but acts independently on the transmission output shaft.

7 Steering Axle Drive-Disconnect

A lever in the cab enables the driver to disconnect the rear [steering axle] drive for over-the-road travel or whenever 4-wheel-drive is not called for.

8 Torque-Proportioning Differentials

The differentials have heavy-duty hypoid main gears and spiral-bevel pinion-gears, including automatic torque-proportioning that transfers up to 24 percent more power to the wheels having the best traction.

9 Planetary Final Drives

Heavy-duty planetary drives provide maximum gear reduction at point of final power application — in the wheel hubs. This substantially reduces the torque or twisting strains in the axles and other parts of the drive train. Refined design includes: floating ring gear; concentrically mounted ring gear hub; full flow lubrication of all bearings and planet gears; special forged bronze planet pinion pins and parts interchangeable between both axle planet sets.

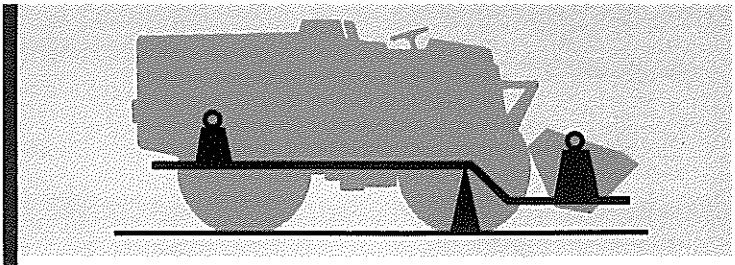

Better Balance and Stability

Another feature pioneered by Hough on rubber-tired shovels is the 40 or more degrees of bucket tip-back breakout action at ground level. This results in more digging capacity, plus low and close load-carry position for the lowest possible center of gravity. This is why a "PAYLOADER" has better stability, balance and capacity without extra, unproductive "dead-weight".

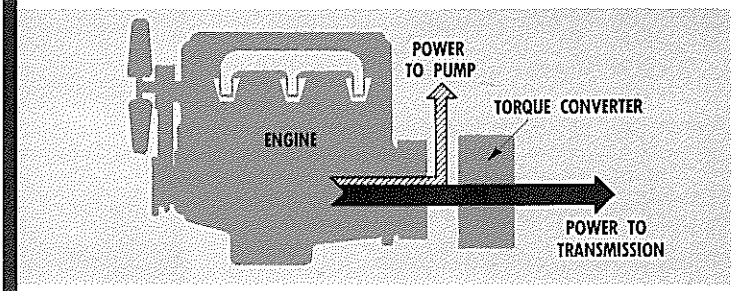

Balanced Power Distribution

Engines for the "PAYLOADER" are selected with ample power to supply both the tractive and the hydraulic needs. In addition, the torque-converter is perfectly balanced to the entire power system so as to take only the amount of engine power necessary for transmission and drive train. Thus the engine speed is maintained at a high level, with power for the hydraulic needs always available, regardless of the load on the drive train.

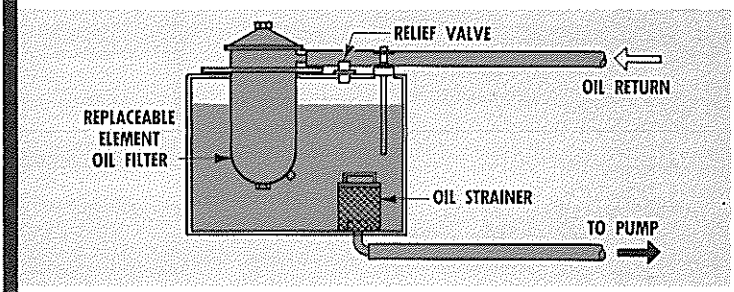

Closed Hydraulic System

This is another extra-protective feature pioneered by Hough on rubber-tired loaders. The hydraulic oil system is closed and pressure-controlled to keep out dirt and dust. In addition, the oil is constantly circulated through a fine-mesh screen and through a renewable-cartridge type oil filter. All these extra-protective features help to prolong the life of the pump and other hydraulic mechanisms and reduce delays, downtime and expense.

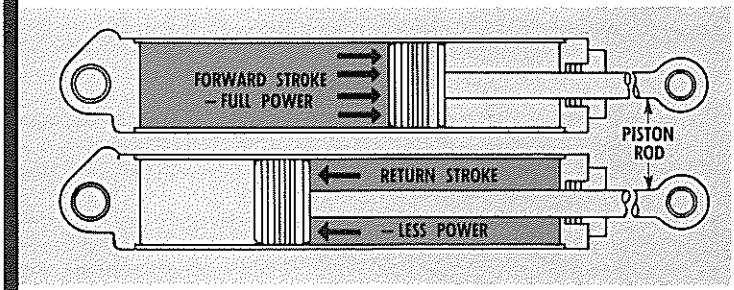

Extra-Power Hydraulics

Hough boom and bucket mechanisms take full advantage of the fact that the forward stroke of a hydraulic ram is always more powerful than the return. "PAYLOADER" uses the full-power forward strokes of the boom rams *and* the bucket rams for the BIG needs — lifting, digging and bucket breakout — and the less-powerful return strokes for the "no-load" and faster motions of lowering and bucket-dumping.

specifications

Operating Capacity ..... 9,000 lbs.
Peak Lift ..... 17,000 lbs.

overall measurements*

Width (Front and Rear Tires) .....7' 11"
Width (Front and Rear Hubs) .....7' 9½"
Steering Axle Oscillation .....22°
(for other dimensions see drawing)

turning radius

Outside Corner Bucket (Carry) .....22' 7"
Outside Rear Hub or Wheel .....23' 2"
Outside Rear Corner (Grille) .....22' 9"
Aisle Operational Width
(Bucket at Carry) .....13' 3"

wheels & tires

Front and Rear*‡ .....16:00 x 24 — 12 P.R.
Optional Tires
13:00 x 24, 16 ply rating Rock Lug
14:00 x 24, 12 ply rating Rock Lug
14:00 x 24, 16 ply rating Rock Lug
14:00 x 24, 20 ply rating Rock Lug
16:00 x 24, 16 ply rating Rock Lug
20:5 x 25, 12 and 20 ply rating High Flotation
Tread, Front & Rear w/16:00 x 24 tires ....6' 5"
Tread, Front & Rear w/14:00 x 24 tires ..6' 3½"

hydraulic system

Closed with pressure-control (25-30 lbs. per sq in.) and vacuum relief.
Boom Rams: Two, double-acting, 6 in. dia.; chrome-plated piston rods. Raises boom in 9½ sec., lowers boom in 4½ sec.
Bucket Rams: Two, double-acting, 4 in. dia.; chrome-plated piston rods.
Pump: Driven from accessory drive.
Valve: Two-spool with Relief Valve.
Reservoir: Electrically welded — with baffles, built-in cartridge-type oil filter, hand hole for cleaning; oil level dip stick.

engine

	Gasoline	Diesel	Turbo-Charged Diesel	Diesel
Make	Hercules	Cummins	Cummins	GMC
Model	WXLC-3	JN-6-BI	JT-6-BI	4-71
Maximum horsepower (stripped) at gov. speed	125	124	162	153
Governed R.P.M.	2200	2250	2200	2200
Maximum Torque (stripped) ft. lbs.	315	290	407	400
at r.p.m. of	1400	1800	1750	1500
Bore and Stroke, in.	4¼ x 4¾	4⅛ x 5	4⅛ x 5	4¼ x 5
No. Cylinders	6	6	6	4
Displacement, cu. in.	404	401	401	284
Fuel Tank Capacity, U.S. gals.	40	40	40	40
Electric System	12 v	12 v	12 v	12 v

torque converter

Single stage, three phase; 3.5 to 1 stall ratio.

brakes

	Service	Parking
Type	Hydraulic, vacuum-boosted	Mechanical
Location	4-wheel	Forward Transmission Output shaft.

model H-90

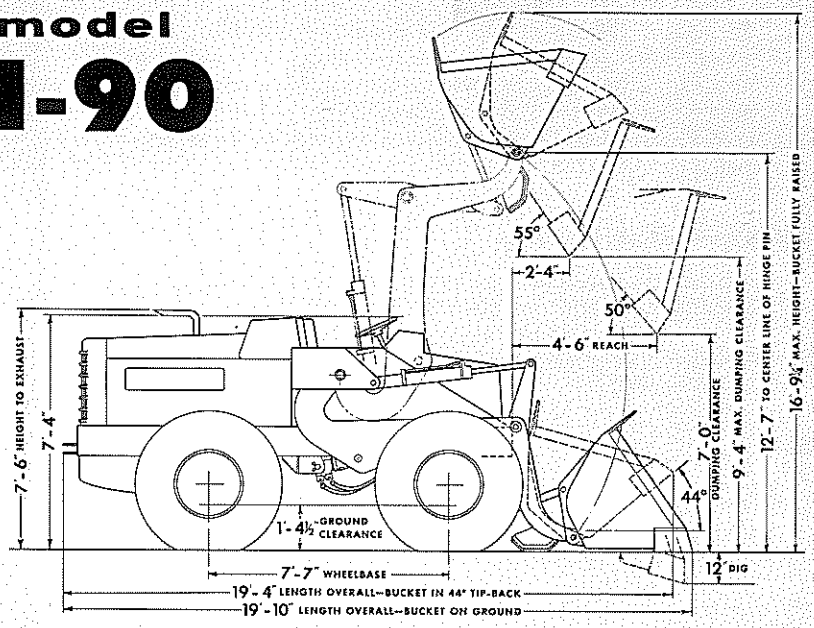

Dimensions and specifications shown are with bucket No. 151093 listed in table below and with 16:00x24—12 P.R. tires.

Material Weight lbs./Cu. Yd.	Use Bucket Number	Type	Overall Bucket Width	S.A.E. Struck Capacity	S.A.E. Rated Capacity
Up to 1,800	152184	A	120"	4½ cu. yd.	5 cu. yd.
Up to 2,250	151101	A	100"	3½ cu. yd.	4 cu. yd.
Up to 3,000	151117	A	100"	2⅝ cu. yd.	3 cu. yd.
Up to 3,000	151093	B	96"	2½ cu. yd.	3 cu. yd.
Up to 3,000	151083	A	96"	2½ cu. yd.	3 cu. yd.
Up to 3,250	141592	A	96"	2¼ cu. yd.	2¾ cu. yd.
Up to 4,500	151109	B	96"	1⅝ cu. yd.	2 cu. yd.
Up to 6,000	152836	B	96"	1¼ cu. yd.	1½ cu. yd.

Note: Type "A" buckets have leading edge with minimum thickness for better penetration.
Type "B" buckets have "wraparound" cutting edge, overlapping stiffener plate and side sheets.

transmission

Type .....full power-shift

Speeds, Forward and Reverse, mph	1st	2nd	3rd
	0-3	0-8	0-24

weights (Approximate Shipping)

Gas Hercules WXLC-3	Diesel Cummins JN-6-BI	Diesel Cummins JT-6-BI	Diesel GMC 4-71
24,450 lbs.	25,750 lbs.	27,000 lbs.	25,700 lbs.

standard equipment

Generator, starter, batteries, horn, voltage regulator, oil bath air cleaner, working and traveling lights, mechanical parking brake, cold weather starting aid for diesel engines, engine compartment side panels, dual hydraulic steering booster cylinders, dual brake system, access ladder.

Gages—ammeter, engine oil pressure, engine coolant temperature, fuel, torque converter oil temperature, hour meter, hydraulic system pressure, clutch pack engagement oil pressure.

accessories

Optional Buckets, Bucket Teeth, Backrip Scarifier Attachment, Lift Fork Attachment, Crane Hook, Angling Back-filler Blade, R. R. Coupler Attachment, Push Block, Bumper Plate, Fire Preventive Equipment, Muffler, 3-Spool Valve, Hydraulic System Shock Absorber, High-Lift Boom Attachment.

allied equipment

Snow plows—"V" Type, One-Way and Rotary, Hydraulic Pick-Up Sweeper, Cabs, Winch, LPG Device for Gas Engines, Blacktop Spreader, 4-in-1 Bucket, Hydraulic Sideboom, Electric Vibratory Compactor.

‡To be furnished unless otherwise specified.

*Complies with width restrictions of all State Highway Departments.

The Frank G. Hough Co. reserves the right to make improvements in design and changes in specifications at any time without notice and without incurring obligation for those units already sold.