FORM UE036068

PARTS BOOK

CATERPILLAR
183 & 193
HYDRAULIC CONTROLS

SERIAL NUMBERS

27H1 TO LAST BUILT
28H1 TO LAST BUILT

QUICK REFERENCE CHARTS

USE THESE CHARTS TO RECORD FREQUENTLY USED MAINTENANCE INFORMATION

MACHINE SERIAL NO.	
EQUIPMENT NO.	

FREQUENTLY REPLACED ITEMS

PART NO.	PART NAME

FLUIDS & LUBRICANTS

WHERE USED	TYPE	AMOUNT

OTHER MAINTENANCE ITEMS

183 & 193 HYDRAULIC CONTROLS

HOW TO ORDER PARTS

Please be sure to furnish the quantity, part number and name of each part wanted. It is also important to give the serial number of the machine for which the parts are intended. Location of serial number plates may be determined by referring to the "Specifications" page of this parts book. It is suggested that you write the serial number of your machine in this space so that it will be readily available when you need it.

THIS PARTS BOOK FOR MACHINE SERIAL NUMBER
. . . . .

To insure prompt delivery, please don't overlook furnishing the correct name of the consignee, also the street address, town, county and state to which the parts are to be shipped, and indicate whether shipment is to be made by freight, express, parcel post or by other means.

WHERE TO ORDER PARTS

Caterpillar dealers maintain over 400 stores in the United States, and similar establishments are located strategically in nearly all countries throughout the world. These organizations are backed by the extensive facilities and resources of Caterpillar Tractor Co.

Dealer personnel are factory trained in the stocking and issuing of parts, and large stocks are constantly maintained to insure prompt service. Contact your nearest Caterpillar dealer to make sure that he has your name and address, the correct serial number of your machine, and an accurate list of accessories and attachments. This record will facilitate the issuance of parts when you need them in a hurry.

WHAT THE CATERPILLAR DEALER CAN DO FOR YOU

Caterpillar dealers are in the business of making it economical and profitable for you to own and operate Caterpillar machinery. They are in constant touch with the factory for new developments in repair and maintenance methods, operating procedures, and parts requirements. Their parts stocks are active and up-to-date, including all parts normally required to protect your investment in Caterpillar machinery.

Nearly all Caterpillar dealers offer 24-hour emergency service. For quick reference, write the name and address of the local dealer on your desk pad or the front of your phone book.

ONLY CATERPILLAR PARTS GIVE CATERPILLAR PERFORMANCE

The same quality and craftsmanship that has made Caterpillar products famous throughout the world is built into all Caterpillar replacement parts.

REVISION PUBLISHED AUGUST 1978

INDEX

Name	Page
Gear Pump	18B-1
Hydraulic Control Arrangements	6
Lines—Blade Tilt Cylinder	30
Lines—Bulldozer	25
Lines—Pilot and Valve	30L
Lines—Pump	23
Linkage—Bulldozer Control	32
Linkage—Ripper Control	34
Mounting	21
Pump	20
Pump and Mounting	18
Specifications	36
Tank and Valve	9
Transfer	35

INDEX ALPHABÉTIQUE

Désignation	Page
Canalisations (bulldozer)	25
Canalisations (pompe)	23
Canalisations (vérin d'inclinaison)	30
Caractéristiques	36
Commandes hydrauliques	6
Groupe de montage	21
Instructions sur décalcomanies	35
Pompe	20
Pompe et groupe de montage	18
Réservoir et distributeur de commande	9
Timonerie du bulldozer	32
Timonerie du ripper	34

INDICE

Nombre	Página
Bomba	20
Bomba y Montaje	18
Calcomanias	35
Conjuntos de Control Hidráulico	6
Especificaciones	36
Montaje	21

Indice—Continuación

Nombre	Página
Tanque y Válvulas	9
Tuberías de la Bomba	23
Tuberías del Bulldozer	25
Tuberías del Cilindro de Inclinación de la Hoja	30
Varillaje de Control del Bulldozer	32
Varillaje de Control del Desgarrador	34

ÍNDICE

Nomenclatura	Página
Arranjos de comando hidráulico	6
Bomba	20
Bomba e montagem	18
Decalcomanias	35
Especificações	36
Ligações de contrôle da lâmina	32
Ligações de contrôle do escarificador	34
Montagem	21
Reservatório e válvula	9
Tubulações da bomba	23
Tubulações para inclinação da lâmina	30
Tubulações para levantamento da lâmina	25

INHALTSVERZEICHNIS

Bezeichnung	Seite
Abziehbilder	35
Aufhängung	21
Aufreisserbedienungsgestänge	34
Hydraulikanlage	6
Neigezylinderleitungen	30
Planierschildbedienungsgestänge	25
Planierzylinderleitungen	25
Pumpe	20
Pumpe und Aufhängung	18
Pumpenleitungen	23
Tank und Steuerventile	9
Technische Daten	36

FOR D8 TRACTOR SERIAL NO. 36A4469 TO 36A5105 INCLUSIVE
AND 46A10725 TO 46A19391 INCLUSIVE

5J4066 ARRANGEMENT--70 U.S. GALLONS PER MINUTE--SINGLE VALVE
FOR USE WITH 8A, 8S OR 8U BULLDOZER

		CONSISTS OF:	PAGE
1	5J2576	HYDRAULIC PUMP ASSEMBLY	20
1	5J3566	BULLDOZER LINES GROUP	25
1	5J3693	TANK AND VALVE GROUP	9
1	5J3996	BULLDOZER CONTROL LINKAGE GROUP	32
1	5J3999	MOUNTING GROUP	20A
1	5J4028	PUMP LINES GROUP	22D
1	.....	INSTALLATION INSTRUCTIONS FORM No. 35700	

5J4068 ARRANGEMENT--70 U.S. GALLONS PER MINUTE--TYPE 1
SINGLE VALVE--FOR USE WITH 8C BULLDOZER

		CONSISTS OF:	
1	5J2576	HYDRAULIC PUMP ASSEMBLY	20
1	5J3134	BULLDOZER LINES GROUP	27
1	5J3693	TANK AND VALVE GROUP	9
1	5J3996	BULLDOZER CONTROL LINKAGE GROUP	32
1	5J3999	MOUNTING GROUP	20A
		- OR -	
1	5S6636	MOUNTING GROUP	20E
1	5J4028	PUMP LINES GROUP	22D
1	.....	INSTALLATION INSTRUCTIONS FORM No. 35700	

5J4068 ARRANGEMENT--70 U.S. GALLONS PER MINUTE--TYPE 2
SINGLE VALVE--FOR USE WITH 8C BULLDOZER

		CONSISTS OF:	
1	5J2576	HYDRAULIC PUMP ASSEMBLY	20
1	5J3134	BULLDOZER LINES GROUP	27
1	5J3693	TANK AND VALVE GROUP	9
1	5J4028	PUMP LINES GROUP	22D
1	7S4766	BULLDOZER AND TILT LINKAGE GROUP	32E
1	7S4769	MOUNTING GROUP	22B-2
1	.....	INSTALLATION INSTRUCTIONS FORM No. 35700	

5J4067 ARRANGEMENT--70 U.S. GALLONS PER MINUTE--DOUBLE VALVE
FOR USE WITH 8S OR 8U BULLDOZER AND BLADE TILT
CYLINDER

		CONSISTS OF:	
1	5J2576	HYDRAULIC PUMP ASSEMBLY	20
1	5J3566	BULLDOZER LINES GROUP	25
1	5J3693	TANK AND VALVE GROUP	9
1	5J3996	BULLDOZER CONTROL LINKAGE GROUP	32
1	5J3998	BLADE TILT CYLINDER LINES GROUP	30
1	5J3999	MOUNTING GROUP	20A
1	5J4028	PUMP LINES GROUP	22D
1	.....	INSTALLATION INSTRUCTIONS FORM No. 35700	

CONTINUED TO PAGE 6A

HYDRAULIC CONTROL ARRANGEMENTS

CONTINUED FROM PAGE 6

5J4070 ARRANGEMENT--70 U.S. GALLONS PER MINUTE--TYPE 1
DOUBLE VALVE--FOR USE WITH 8C BULLDOZER AND RIPPER
CONSISTS OF:

			PAGE
1	5J2576	HYDRAULIC PUMP ASSEMBLY	20
1	5J3134	BULLDOZER LINES GROUP	27
1	5J3691	TANK AND VALVE GROUP	12
1	5J3996	BULLDOZER CONTROL LINKAGE GROUP	32
1	5J3997	RIPPER CONTROL LINKAGE GROUP	34
1	5J3999	MOUNTING GROUP	20A
		- OR -	
1	5S6636	MOUNTING GROUP	20E
1	5J4028	PUMP LINES GROUP	22D
1	.....	INSTALLATION INSTRUCTIONS FORM NO. 35700	

5J4070 ARRANGEMENT--70 U.S. GALLONS PER MINUTE--TYPE 2
DOUBLE VALVE--FOR USE WITH 8C BULLDOZER AND RIPPER
CONSISTS OF:

1	5J2576	HYDRAULIC PUMP ASSEMBLY	20
1	5J3134	BULLDOZER LINES GROUP	27
1	5J3691	TANK AND VALVE GROUP	12
1	5J4028	PUMP LINES GROUP	22D
1	7S4763	RIPPER LINKAGE GROUP	35
1	7S4766	BULLDOZER AND TILT LINKAGE GROUP	32E
1	7S4769	MOUNTING GROUP	22B-2
1	.....	INSTALLATION INSTRUCTIONS FORM NO. 35700	

5S6600 ARRANGEMENT--70 U.S. GALLONS PER MINUTE--TYPE 1
SINGLE VALVE--FOR USE WITH 8A, 8S OR 8U BULLDOZER
CONSISTS OF:

1	5J2576	HYDRAULIC PUMP ASSEMBLY	20
1	5J3693	TANK AND VALVE GROUP	9
1	5J3996	BULLDOZER CONTROL LINKAGE GROUP	32
1	5J3999	MOUNTING GROUP	20A
		- OR -	
1	5S6636	MOUNTING GROUP	20E
1	5J4028	PUMP LINES GROUP	22D
1	5S6571	BULLDOZER LINES GROUP	24B
1	.....	INSTALLATION INSTRUCTIONS FORM NO. 35700	

5S6600 ARRANGEMENT--70 U.S. GALLONS PER MINUTE--TYPE 2
SINGLE VALVE--FOR USE WITH 8A, 8S OR 8U BULLDOZER
CONSISTS OF:

1	5J2576	HYDRAULIC PUMP ASSEMBLY	20
1	5J3693	TANK AND VALVE GROUP	9
1	5J4028	PUMP AND LINES GROUP	22D
1	5S6571	BULLDOZER LINES GROUP	24B
1	7S4766	BULLDOZER AND TILT LINKAGE GROUP	32E
1	7S4769	MOUNTING GROUP	22B-2
1	.....	INSTALLATION INSTRUCTIONS FORM NO. 35700	

CONTINUED TO PAGE 6B

HYDRAULIC CONTROL ARRANGEMENTS

CONTINUED FROM PAGE 6A

5S6601 ARRANGEMENT--70 U.S. GALLONS PER MINUTE--TYPE 1 DOUBLE VALVE--FOR USE WITH 8S OR 8U BULLDOZER AND BLADE TILT CYLINDER

CONSISTS OF:

			PAGE
1	5J2576	HYDRAULIC PUMP ASSEMBLY	20
1	5J3693	TANK AND VALVE GROUP	9
1	5J3996	BULLDOZER CONTROL LINKAGE GROUP	32
1	5J3998	BLADE TILT CYLINDER LINES GROUP	30
1	5J3999	MOUNTING GROUP	20A
	- OR -		
1	5S6636	MOUNTING GROUP	20E
1	5J4028	PUMP LINES GROUP	22D
1	5S6571	BULLDOZER LINES GROUP	24B
1	.....	INSTALLATION INSTRUCTIONS FORM No. 35700	

5S6601 ARRANGEMENT--70 U.S GALLONS PER MINUTE--TYPE 2 DOUBLE VALVE--FOR USE WITH 8S OR 8U BULLDOZER AND BLADE TILT CYLINDER

CONSISTS OF:

1	5J2576	HYDRAULIC PUMP ASSEMBLY	20
1	5J3693	TANK AND VALVE GROUP	9
1	5J3998	BLADE TILT CYLINDER LINES GROUP	30
1	5J4028	PUMP LINES GROUP	22D
1	5S6571	BULLDOZER LINES GROUP	24B
1	7S4766	BULLDOZER AND TILT LINKAGE GROUP	32E
1	7S4769	MOUNTING GROUP	22B-2
1	.....	INSTALLATION INSTRUCTIONS FORM No. 35700	

5S6602 ARRANGEMENT--70 U.S. GALLONS PER MINUTE--TYPE 1 DOUBLE VALVE--FOR USE WITH 8A, 8S OR 8U BULLDOZER AND RIPPER

CONSISTS OF:

1	5J2576	HYDRAULIC PUMP ASSEMBLY	20
1	5J3691	TANK AND VALVE GROUP	12
1	5J3996	BULLDOZER CONTROL LINKAGE GROUP	32
1	5J3997	RIPPER CONTROL LINKAGE GROUP	34
1	5J3999	MOUNTING GROUP	20A
	- OR -		
1	5S6636	MOUNTING GROUP	20E
1	5J4028	PUMP LINES GROUP	22D
1	5S6571	BULLDOZER LINES GROUP	24B
1	.....	INSTALLATION INSTRUCTIONS FORM No. 35700	

5S6602 ARRANGEMENT--70 U.S. GALLONS PER MINUTE--TYPE 2 DOUBLE VALVE--FOR USE WITH 8A, 8S OR 8U BULLDOZER AND RIPPER

CONSISTS OF:

1	5J2576	HYDRAULIC PUMP ASSEMBLY	20
1	5J3691	TANK AND VALVE GROUP	12
1	5J4028	PUMP LINES GROUP	22D
1	5S6571	BULLDOZER LINES GROUP	24B
1	7S4763	RIPPER LINKAGE GROUP	35
1	7S4766	BULLDOZER AND TILT LINKAGE GROUP	32E
1	7S4769	MOUNTING GROUP	22B-2
1	.....	INSTALLATION INSTRUCTIONS FORM No. 35700	

CONTINUED TO PAGE 6C

HYDRAULIC CONTROL ARRANGEMENTS

CONTINUED FROM PAGE 6B

5S6603 ARRANGEMENT--70 U.S. GALLONS PER MINUTE--TYPE 1 TRIPLE VALVE--FOR USE WITH 8S OR 8U BULLDOZER, RIPPER AND BLADE TILT CYLINDER

CONSISTS OF:

			PAGE
1	5J2576	HYDRAULIC PUMP ASSEMBLY	20
1	5J3691	TANK AND VALVE GROUP	12
1	5J3996	BULLDOZER CONTROL LINKAGE GROUP	32
1	5J3997	RIPPER CONTROL LINKAGE GROUP	34
1	5J3998	BLADE TILT CYLINDER LINES GROUP	30
1	5J3999	MOUNTING GROUP	20A
		- OR -	
1	5S6636	MOUNTING GROUP	20E
1	5J4028	PUMP LINES GROUP	22D
1	5S6571	BULLDOZER LINES GROUP	24B
1	.....	INSTALLATION INSTRUCTIONS FORM NO. 35700	

5S6603 ARRANGEMENT--70 U.S. GALLONS PER MINUTE--TYPE 2 TRIPLE VALVE--FOR USE WITH 8S OR 8U BULLDOZER, RIPPER AND BLADE TILT CYLINDER

CONSISTS OF:

1	5J2576	HYDRAULIC PUMP ASSEMBLY	20
1	5J3691	TANK AND VALVE GROUP	12
1	5J3998	BLADE TILT CYLINDER LINES GROUP	30
1	5J4028	PUMP LINES GROUP	22D
1	5S6571	BULLDOZER LINES GROUP	24B
1	7S4763	RIPPER LINKAGE GROUP	35
1	7S4766	BULLDOZER & TILT LINKAGE GROUP	32E
1	7S4769	MOUNTING GROUP	22B-2
1	.....	INSTALLATION INSTRUCTIONS FORM NO. 35700	

5J4071 ARRANGEMENT--70 U.S. GALLONS PER MINUTE--DOUBLE VALVE FOR USE WITH 8A, 8S OR 8U BULLDOZER AND RIPPER

CONSISTS OF:

1	5J2576	HYDRAULIC PUMP ASSEMBLY	20
1	5J3566	BULLDOZER LINES GROUP	25
1	5J3691	TANK AND VALVE GROUP	12
1	5J3996	BULLDOZER CONTROL LINKAGE GROUP	32
1	5J3997	RIPPER CONTROL LINKAGE GROUP	34
1	5J3999	MOUNTING GROUP	20A
1	5J4028	PUMP LINES GROUP	22D
1	.....	INSTALLATION INSTRUCTIONS FORM NO. 35700	

5J4072 ARRANGEMENT--70 U.S. GALLONS PER MINUTE--TRIPLE VALVE FOR USE WITH 8S OR 8U BULLDOZER, RIPPER AND BLADE TILT CYLINDER

CONSISTS OF:

1	5J2576	HYDRAULIC PUMP ASSEMBLY	20
1	5J3566	BULLDOZER LINES GROUP	25
1	5J3691	TANK AND VALVE GROUP	12
1	5J3996	BULLDOZER CONTROL LINKAGE GROUP	32
1	5J3997	RIPPER CONTROL LINKAGE GROUP	34
1	5J3998	BLADE TILT CYLINDER LINES GROUP	30
1	5J3999	MOUNTING GROUP	20A
1	5J4028	PUMP LINES GROUP	22D
1	.....	INSTALLATION INSTRUCTIONS FORM NO. 35700	

HYDRAULIC CONTROL ARRANGEMENTS

FOR D8 TRACTORS SERIAL NO. 36A5106-UP AND 46A19392-UP

8S6914 ARRANGEMENT--70 U.S. GALLONS PER MINUTE--DOUBLE VALVE FOR USE WITH 8S OR 8U BULLDOZER & BLADE TILT CYLINDER

	Consists of:		Page
1	5J2576	Hydraulic Pump Assembly	20
1	5J3693	Tank & Valve Group	9
1	5S6571	Bulldozer Lines Group	24B
1	7S4766	Bulldozer & Tilt Linkage Group	32E
1	7S4769	Mounting Group	22B-2
1	8S6918	Blade Tilt Lines Group	30F
1	9S3537	Pump Lines Group	24A-2
1	.....	Installation Instructions Form No. 35700	

8S6915 ARRANGEMENT--70 U.S. GALLONS PER MINUTE--TRIPLE VALVE FOR USE WITH 8S OR 8U BULLDOZER, RIPPER & BLADE TILT CYLINDER

	Consists of:		
1	5J2576	Hydraulic Pump Assembly	20
1	5J3691	Tank & Valve Group	12
1	5S6571	Bulldozer Lines Group	24B
1	7S4763	Ripper Linkage Group	35
1	7S4766	Bulldozer Lines Group	32E
1	7S4769	Mounting Group	22B-2
1	8S6918	Blade Tilt Lines Group	30F
1	9S3537	Pump Lines Group	24A-4
1	.....	Installation Instructions Form No. 35700	

8S6916 ARRANGEMENT--70 U.S. GALLONS PER MINUTE--DOUBLE VALVE FOR USE WITH 8R BULLDOZER & BLADE TILT CYLINDER

	Consists of:		
1	5J2576	Hydraulic Pump Assembly	20
1	5J3693	Tank & Valve Group	9
1	5S6571	Bulldozer Lines Group	24B
1	7S4766	Bulldozer & Tilt Linkage Group	32E
1	8S5871	Ripper & Bulldozer Linkage & Console Group	32H
1	8S5872	Mounting Group	20F
1	8S6919	Pilot Lines & Valve Group	30M
1	8S6920	Ripper & Bulldozer Tilt Lines Group	30J
1	9S3537	Pump Lines Group	24A-4
1	.....	Installation Instructions Form No. 35700	

HYDRAULIC CONTROL ARRANGEMENTS

FOR D8 TRACTORS SERIAL NO. 36A5106-UP AND 46A19392-UP

8S6917 ARRANGEMENT--70 U.S. GALLONS PER MINUTE--TRIPLE VALVE FOR USE WITH 8R BULLDOZER, RIPPER & BLADE TILT CYLINDER

	CONSISTS OF:		PAGE
1	5J2576	HYDRAULIC PUMP ASSEMBLY	20
1	5J3691	TANK & VALVE GROUP	12
1	5S6571	BULLDOZER LINES GROUP	24B
1	7S4763	RIPPER LINKAGE GROUP	35
1	7S4766	BULLDOZER & TILT LINKAGE GROUP	32E
1	8S5871	RIPPER & BULLDOZER LINKAGE & CONSOLE GROUP	32H
1	8S5872	MOUNTING GROUP	20F
1	8S6919	PILOT LINES & VALVE GROUP	30M
1	8S6920	RIPPER & BULLDOZER TILT LINES GROUP	30J
1	9S3537	PUMP LINES GROUP	24A-4
1	.....	INSTALLATION INSTRUCTIONS FORM NO. 35700	

HYDRAULIC CONTROL ARRANGEMENTS

FOR D9 TRACTORS SERIAL NO. 66A3266 TO 66A6677 INCLUSIVE

5J4398 ARRANGEMENT--93 U.S. GALLONS PER MINUTE--TYPE 1
SINGLE VALVE--FOR USE WITH 9A, 9S OR 9U BULLDOZER

		CONSISTS OF:	PAGE
1	5J2658	PUMP AND MOUNTING GROUP	18
1	5J3693	TANK AND VALVE GROUP	9
1	5J4359	PUMP LINES GROUP	24
1	5J4390	BULLDOZER LINES GROUP	26
1	5J4391	BULLDOZER CONTROL LINKAGE GROUP	32C
1	5J4392	MOUNTING GROUP	22
	- OR -		
1	5S6638	MOUNTING GROUP	22B-1
1	.....	INSTALLATION INSTRUCTIONS FORM NO. 35699	

5J4398 ARRANGEMENT--93 U.S. GALLONS PER MINUTE--TYPE 2
SINGLE VALVE--FOR USE WITH 9A, 9S OR 9U BULLDOZER

		CONSISTS OF:	
1	5J2658	PUMP AND MOUNTING GROUP	18
1	5J3693	TANK AND VALVE GROUP	9
1	5J4359	PUMP LINES GROUP	24
1	5J4390	BULLDOZER LINES GROUP	26
1	7S4765	BULLDOZER AND TILT LINKAGE GROUP	32F
1	7S4768	MOUNTING GROUP	22B-4
1	.....	INSTALLATION INSTRUCTIONS FORM NO. 35699	

5J4400 ARRANGEMENT--93 U.S. GALLONS PER MINUTE--TYPE 1
SINGLE VALVE--FOR USE WITH 9C BULLDOZER

		CONSISTS OF:	
1	5J2658	PUMP AND MOUNTING GROUP	18
1	5J3693	TANK AND VALVE GROUP	9
1	5J4359	PUMP LINES GROUP	24
1	5J4391	BULLDOZER CONTROL LINKAGE GROUP	32C
1	5J4392	MOUNTING GROUP	22
	- OR -		
1	5S6638	MOUNTING GROUP	22B-1
1	5J4394	BULLDOZER LINES GROUP	28
1	.....	INSTALLATION INSTRUCTIONS FORM NO. 35699	

5J4400 ARRANGEMENT--93 U.S. GALLONS PER MINUTE--TYPE 2
SINGLE VALVE--FOR USE WITH 9C BULLDOZER

		CONSISTS OF:	
1	5J2658	PUMP AND MOUNTING GROUP	18
1	5J3693	TANK AND VALVE GROUP	9
1	5J4359	PUMP LINES GROUP	24
1	5J4394	BULLDOZER LINES GROUP	28
1	7S4765	BULLDOZER AND TILT LINKAGE GROUP	32F
1	7S4768	MOUNTING GROUP	22B-4
1	.....	INSTALLATION INSTRUCTIONS FORM NO. 35699	

CONTINUED TO PAGE 6E

HYDRAULIC CONTROL ARRANGEMENTS

CONTINUED FROM PAGE 6D

5J4403 ARRANGEMENT--93 U.S. GALLONS PER MINUTE--TYPE 1 DOUBLE VALVE--FOR USE WITH 9A, 9S OR 9U BULLDOZER AND RIPPER

CONSISTS OF:

			PAGE
1	5J2658	PUMP AND MOUNTING GROUP	18
1	5J3691	TANK AND VALVE GROUP	12
1	5J4359	PUMP LINES GROUP	24
1	5J4390	BULLDOZER LINES GROUP	26
1	5J4391	BULLDOZER CONTROL LINKAGE GROUP	32C
1	5J4392	MOUNTING GROUP	22
		- OR -	
1	5S6638	MOUNTING GROUP	22B-1
1	5J4395	RIPPER CONTROL LINKAGE GROUP	34
1	.....	INSTALLATION INSTRUCTIONS FORM NO. 35699	

5J4403 ARRANGEMENT--93 U.S. GALLONS PER MINUTE--TYPE 2 DOUBLE VALVE--FOR USE WITH 9A, 9S OR 9U BULLDOZER AND RIPPER

CONSISTS OF:

1	5J2658	PUMP AND MOUNTING GROUP	18
1	5J3691	TANK AND VALVE GROUP	12
1	5J4359	PUMP LINES GROUP	24
1	5J4390	BULLDOZER LINES GROUP	26
1	7S4762	RIPPER LINKAGE GROUP	34B
1	7S4765	BULLDOZER AND TILT LINKAGE GROUP	32F
1	7S4768	MOUNTING GROUP	22B-4
1	.....	INSTALLATION INSTRUCTIONS FORM NO. 35699	

5J4402 ARRANGEMENT--93 U.S. GALLONS PER MINUTE--TYPE 1 DOUBLE VALVE--FOR USE WITH 9C BULLDOZER AND RIPPER

CONSISTS OF:

1	5J2658	PUMP AND MOUNTING GROUP	18
1	5J3691	TANK AND VALVE GROUP	12
1	5J4359	PUMP LINES GROUP	24
1	5J4391	BULLDOZER CONTROL LINKAGE GROUP	32C
1	5J4392	MOUNTING GROUP	22
		- OR -	
1	5S6638	MOUNTING GROUP	22B-1
1	5J4394	BULLDOZER LINES GROUP	28
1	5J4395	RIPPER CONTROL LINKAGE GROUP	34
1	.....	INSTALLATION INSTRUCTIONS FORM NO. 35699	

5J4402 ARRANGEMENT--93 U.S. GALLONS PER MINUTE--TYPE 2 DOUBLE VALVE--FOR USE WITH 9C BULLDOZER AND RIPPER

CONSISTS OF:

1	5J2658	PUMP AND MOUNTING GROUP	18
1	5J3691	TANK AND VALVE GROUP	12
1	5J4359	PUMP LINES GROUP	24
1	5J4394	BULLDOZER LINES GROUP	28
1	7S4762	RIPPER LINKAGE GROUP	34B
1	7S4765	BULLDOZER AND TILT LINKAGE GROUP	32F
1	7S4768	MOUNTING GROUP	22B-4
1	.....	INSTALLATION INSTRUCTIONS FORM NO. 35699	

CONTINUED TO PAGE 7

HYDRAULIC CONTROL ARRANGEMENTS

5J4399	ARRANGEMENT--93 U.S. GALLONS PER MINUTE--TYPE 1 DOUBLE VALVE--FOR USE WITH 9S OR 9U BULLDOZER AND BLADE TILT CYLINDER		
	CONSISTS OF:		PAGE
1	5J2658	PUMP AND MOUNTING GROUP	18
1	5J3693	TANK AND VALVE GROUP	9
1	5J4359	PUMP LINES GROUP	24
1	5J4390	BULLDOZER LINES GROUP	26
1	5J4391	BULLDOZER CONTROL LINKAGE GROUP	32C
1	5J4392	MOUNTING GROUP	22
		- OR -	
1	5S6638	MOUNTING GROUP	22B-1
1	5J4393	BLADE TILT LINES GROUP	30C
1	.....	INSTALLATION INSTRUCTIONS FORM NO. 35699	
5J4399	ARRANGEMENT--93 U.S. GALLONS PER MINUTE--TYPE 2 DOUBLE VALVE--FOR USE WITH 9S OR 9U BULLDOZER AND BLADE TILT CYLINDER		
	CONSISTS OF:		
1	5J2658	PUMP AND MOUNTING GROUP	18
1	5J3693	TANK AND VALVE GROUP	9
1	5J4359	PUMP LINES GROUP	24
1	5J4390	BULLDOZER LINES GROUP	26
1	5J4393	BLADE TILT LINES GROUP	30C
1	7S4765	BULLDOZER AND TILT LINKAGE GROUP	32F
1	7S4768	MOUNTING GROUP	22B-4
5J4404	ARRANGEMENT--93 U.S. GALLONS PER MINUTE--TYPE 1 TRIPLE VALVE--FOR USE WITH 9S OR 9U BULLDOZER, RIPPER AND BLADE TILT CYLINDER		
	CONSISTS OF:		
1	5J2658	PUMP AND MOUNTING GROUP	18
1	5J3691	TANK AND VALVE GROUP	12
1	5J4359	PUMP LINES GROUP	24
1	5J4390	BULLDOZER LINES GROUP	26
1	5J4391	BULLDOZER CONTROL LINKAGE GROUP	32C
1	5J4392	MOUNTING GROUP	22
		- OR -	
1	5S6638	MOUNTING GROUP	22B-1
1	5J4393	BLADE TILT LINES GROUP	30C
1	5J4395	RIPPER CONTROL LINKAGE GROUP	34
1	.....	INSTALLATION INSTRUCTIONS FORM NO. 35699	
5J4404	ARRANGEMENT--93 U.S. GALLONS PER MINUTE--TYPE 2 TRIPLE VALVE--FOR USE WITH 9S OR 9U BULLDOZER, RIPPER AND BLADE TILT CYLINDER		
	CONSISTS OF:		
1	5J2658	PUMP AND MOUNTING GROUP	18
1	5J3691	TANK AND VALVE GROUP	12
1	5J4359	PUMP LINES GROUP	24
1	5J4390	BULLDOZER LINES GROUP	26
1	5J4393	BLADE TILT LINES GROUP	30C
1	7S4762	RIPPER LINKAGE GROUP	34B
1	7S4765	BULLDOZER AND TILT LINKAGE GROUP	32F
1	7S4768	MOUNTING GROUP	22B-4
1	.....	INSTALLATION INSTRUCTIONS FORM NO. 35699	

HYDRAULIC CONTROL ARRANGEMENTS

FOR D9 TRACTORS SERIAL NO. 66A6678--UP

8S4481	ARRANGEMENT--93 U.S. GALLONS PER MINUTE--DOUBLE VALVE FOR USE WITH 9S OR 9U BULLDOZER & BLADE TILT CYLINDER		
	CONSISTS OF:		PAGE
1	5J2658	PUMP AND MOUNTING GROUP	18
1	5J3693	TANK AND VALVE GROUP	9
1	5J4359	PUMP LINES GROUP	24
1	5J4390	BULLDOZER LINES GROUP	26
1	7S4765	BULLDOZER AND TILT LINKAGE GROUP	32F
1	7S4768	MOUNTING GROUP	22B-4
1	8S4383	BLADE TILT LINES GROUP	30E
1	.....	INSTALLATION INSTRUCTIONS FORM NO. 35699	
8S4483	ARRANGEMENT--93 U.S. GALLONS PER MINUTE--DOUBLE VALVE FOR USE WITH 9R BULLDOZER AND BLADE TILT CYLINDER		
	CONSISTS OF:		
1	5J2658	PUMP AND MOUNTING GROUP	18
1	5J3693	TANK AND VALVE GROUP	9
1	5J4390	BULLDOZER LINES GROUP	26
1	7S4765	BULLDOZER AND TILT LINKAGE GROUP	32F
1	8S4384	RIPPER BULLDOZER & TILT LINES GROUP	30H
1	8S4385	PUMP LINES GROUP	24A-3
1	8S4480	RIPPER BULLDOZER LINKAGE AND CONSOLE GROUP	32G
1	8S5297	MOUNTING GROUP	22B-5
1	8S7014	PILOT LINES AND VALVE GROUP	30L
1	.....	INSTALLATION INSTRUCTIONS FORM NO. 35699	
8S4482	ARRANGEMENT--93 U.S. GALLONS PER MINUTE--TRIPLE VALVE FOR USE WITH 9S OR 9U BULLDOZER, RIPPER AND BLADE TILT CYLINDER		
	CONSISTS OF:		
1	5J2658	PUMP AND MOUNTING GROUP	18
1	5J3691	TANK AND VALVE GROUP	12
1	5J4359	PUMP LINES GROUP	24
1	5J4390	BULLDOZER LINES GROUP	26
1	7S4762	RIPPER LINKAGE GROUP	34B
1	7S4765	BULLDOZER AND TILT LINKAGE GROUP	32F
1	7S4768	MOUNTING GROUP	22B-4
1	8S4383	BLADE TILT LINES GROUP	30E
1	.....	INSTALLATION INSTRUCTIONS FORM NO. 35699	
8S4484	ARRANGEMENT--93 U.S. GALLONS PER MINUTE--TRIPLE VALVE FOR USE WITH 9R BULLDOZER, RIPPER AND BLADE TILT CYLINDER		
	CONSISTS OF:		
1	5J2658	PUMP AND MOUNTING GROUP	18
1	5J3691	TANK AND VALVE GROUP	12
1	5J4390	BULLDOZER LINES GROUP	26
1	7S4762	RIPPER LINKAGE GROUP	34B
1	7S4765	BULLDOZER AND TILT LINKAGE GROUP	32F
1	8S4384	RIPPER BULLDOZER & TILT LINES GROUP	30H
1	8S4385	PUMP LINES GROUP	24A-3
1	8S4480	RIPPER BULLDOZER LINKAGE AND CONSOLE GROUP	32G
1	8S5297	MOUNTING GROUP	22B-5
1	8S7014	PILOT LINES AND VALVE GROUP	30L
1	.....	INSTALLATION INSTRUCTIONS FORM NO. 35699	

HYDRAULIC CONTROL ARRANGEMENTS

FOR D9 TRACTORS SERIAL NO. 66A6678-UP

8S7072 Arrangement--93 U.S. Gallons per Minute--Triple Valve
For use with 9C Bulldozer and 9D Ripper

		Consists of:	Page
1	5J2658	Pump & Mounting Group.....	18
1	5J3691	Tank & Valve Group.....	12
1	5J4394	Bulldozer Lines Group.....	28
1	7S4765	Bulldozer & Tilt Linkage Group.....	32F
1	8S4385	Pump Lines Group.....	24A-3
1	8S5297	Mounting Group.....	22B-6
1	8S5792	Ripper Linkage & Console Group.....	33
1	8S7014	Pilot Lines & Valve Group.....	30L
	- or -		
1	1P1562	Pilot Lines and Valve Group.....	30N
1	.....	Installation Instruction Form No.	35699

8S7073 Arrangement--93 U.S. Gallons per Minute--Triple Valve
For use with 9S or 9U Bulldozer, 9D Ripper and Blade Tilt Cylinder--Replaces 8S4482

		Consists of:	
1	5J2658	Pump & Mounting Group.....	18
1	5J3691	Tank & Valve Group.....	12
1	5J4390	Bulldozer Lines Group.....	26
1	7S4765	Bulldozer & Tilt Linkage Group.....	32F
1	8S4383	Blade Tilt Lines Group.....	30E
1	8S4385	Pump Lines Group.....	24A-3
1	8S5297	Mounting Group.....	22B-5
1	8S5792	Ripper Linkage & Console Group.....	33
1	8S7014	Pilot Lines & Valve Group.....	30L
	- or -		
1	1P1562	Pilot Lines and Valve Group.....	30N
1	.....	Installation Instruction Form No.	35699

8S7074 Arrangement--93 U.S. Gallons per Minute--Triple Valve
For use with 9R Bulldozer, 9D Ripper and Blade Tilt Cylinder--Replaces 8S4484

		Consists of:	
1	5J2658	Pump & Mounting Group.....	18
1	5J3691	Tank & Valve Group.....	12
1	5J4390	Bulldozer Lines Group.....	26
1	7S4765	Bulldozer & Tilt Linkage Group.....	32F
1	8S4384	Ripper Bulldozer & Tilt Lines Group.	30H
1	8S4385	Pump Lines Group.....	24A-3
1	8S4480	Ripper Bulldozer Linkage & Console Group.....	32G
1	8S5297	Mounting Group.....	22B-6
1	8S5793	Ripper Linkage & Console Group.....	32J
1	8S7014	Pilot Lines & Valve Group.....	30L
1	.....	Installation Instruction Form No.	35699

ONLY "CATERPILLAR" PARTS GIVE "CATERPILLAR" PERFORMANCE

FOR D9 TRACTORS SERIAL NO. 66A6678-UP

9S4553 Arrangement--93 U.S. Gallons per Minute--Triple Valve
For use with 9A or 9C Bulldozer and 9D Ripper

		Consists of:	Page
1	5J2658	Pump & Mounting Group	18
1	5J3691	Tank & Valve Group	12
1	5J4390	Bulldozer Lines Group	26
1	7S4765	Bulldozer & Tilt Linkage Group	32F
1	8S4385	Pump Lines Group	24A-3
1	8S5297	Mounting Group	22B-6
1	8S5792	Ripper Linkage & Console Group	33
1	8S7014	Pilot Lines & Valve Group	30L
	- or -		
1	1P1562	Pilot Lines and Valve Group	30N
1	.....	Installation Instruction Form No. 35699	

HYDRAULIC CONTROL ARRANGEMENTS

FOR D9 TRACTORS SERIAL NO. 66A8055-UP

9S6850 ARRANGEMENT--88 U.S. GALLONS PER MINUTE--SINGLE VALVE FOR USE WITH 9A OR 9C BULLDOZER

CONSISTS OF:

			PAGE
1	5J3693	TANK AND VALVE GROUP	9
1	5J4390	BULLDOZER LINES GROUP	26
1	7J4459	PUMP AND MOUNTING GROUP	18B
1	7S4765	BULLDOZER AND TILT LINKAGE GROUP	32F
1	9S7246	PUMP LINES GROUP	24A-6
1	9S7422	MOUNTING GROUP	22B-8
1	.....	INSTALLATION INSTRUCTIONS FORM NO. GMG00163	

9S6851 ARRANGEMENT--88 U.S. GALLONS PER MINUTE--DOUBLE VALVE FOR USE WITH 9S OR 9U BULLDOZER AND BLADE TILT CYLINDER

CONSISTS OF:

1	5J3693	TANK AND VALVE GROUP	9
1	5J4390	BULLDOZER LINES GROUP	26
1	7J4459	PUMP AND MOUNTING GROUP	18B
1	7S4765	BULLDOZER AND TILT LINKAGE GROUP	32F
1	8S4383	BLADE TILT LINES GROUP	30E
1	9S7246	PUMP LINES GROUP	24A-6
1	9S7422	MOUNTING GROUP	22B-8
1	.....	INSTALLATION INSTRUCTIONS FORM NO. GMG00163	

9S6852 ARRANGEMENT--88 U.S. GALLONS PER MINUTE--TRIPLE VALVE FOR USE WITH 9A OR 9C BULLDOZER AND 9D RIPPER

CONSISTS OF:

1	5J3691	TANK AND VALVE GROUP	12
1	5J4390	BULLDOZER LINES GROUP	26
1	7J4459	PUMP AND MOUNTING GROUP	18B
1	1P1562	PILOT LINES AND VALVE GROUP	30N
1	7S4765	BULLDOZER AND TILT LINKAGE GROUP	32F
1	8S5792	RIPPER LINKAGE AND CONSOLE GROUP	33
1	9S7247	PUMP LINES GROUP	24A-5
1	9S7248	MOUNTING GROUP	22C
1	.....	INSTALLATION INSTRUCTIONS FORM NO. GMG00163	

9S6853 ARRANGEMENT--88 U.S. GALLONS PER MINUTE--TRIPLE VALVE FOR USE WITH 9S OR 9U BULLDOZER, 9D RIPPER AND BLADE TILT CYLINDER

CONSISTS OF:

1	5J3691	TANK AND VALVE GROUP	12
1	5J4390	BULLDOZER LINES GROUP	26
1	7J4459	PUMP AND MOUNTING GROUP	18B
1	1P1562	PILOT LINES AND VALVE GROUP	30N
1	7S4765	BULLDOZER AND TILT LINKAGE GROUP	32F
1	8S4383	BLADE TILT LINES GROUP	30E
1	8S5792	RIPPER LINKAGE AND CONSOLE GROUP	33
1	9S7247	PUMP LINES GROUP	24A-5
1	9S7248	MOUNTING GROUP	22C
1	.....	INSTALLATION INSTRUCTIONS FORM NO. GMG00163	

HYDRAULIC CONTROL ARRANGEMENTS

FOR D9 TRACTORS SERIAL NO. 66A8055-UP

9S6854 ARRANGEMENT--88 U.S. GALLONS PER MINUTE--SINGLE VALVE
FOR USE WITH 9C BULLDOZER

		CONSISTS OF:	PAGE
1	5J3693	TANK AND VALVE GROUP	9
1	5J4394	BULLDOZER LINES GROUP	28
1	7J4459	PUMP AND MOUNTING GROUP	18B
1	7S4765	BULLDOZER AND TILT LINKAGE GROUP	32F
1	9S7246	PUMP LINES GROUP	24A-6
1	9S7422	MOUNTING GROUP	22B-8
1	.....	INSTALLATION INSTRUCTIONS FORM NO. GMG00163	

9S6855 ARRANGEMENT--88 U.S. GALLONS PER MINUTE--TRIPLE VALVE
FOR USE WITH 9C BULLDOZER AND 9D RIPPER

		CONSISTS OF:	
1	5J3691	TANK & VALVE GROUP	12
1	5J4394	BULLDOZER LINES GROUP	28
1	7J4459	PUMP AND MOUNTING GROUP	18B
1	7S4765	BULLDOZER AND TILT LINKAGE GROUP	32F
1	1P1562	PILOT LINES AND VALVE GROUP	30N
1	8S5792	RIPPER LINKAGE AND CONSOLE GROUP	33
1	9S7247	PUMP LINES GROUP	24A-5
1	9S7248	MOUNTING GROUP	22C
1	.....	INSTALLATION INSTRUCTIONS FORM NO. GMG00163	

9S6856 ARRANGEMENT--88 U.S. GALLONS PER MINUTE--DOUBLE VALVE
FOR USE WITH 9R BULLDOZER AND BLADE TILT CYLINDER

		CONSISTS OF:	
1	5J3693	TANK AND VALVE GROUP	9
1	5J4390	BULLDOZER LINES GROUP	26
1	7J4459	PUMP AND MOUNTING GROUP	18B
1	7S4765	BULLDOZER AND TILT LINKAGE GROUP	32F
1	8S4384	RIPPER BULLDOZER AND TILT LINES GROUP.	30H
1	8S4480	RIPPER BULLDOZER LINKAGE AND CONSOLE GROUP	32G
1	8S7014	PILOT LINES AND VALVE GROUP	30L
1	9S7247	PUMP LINES GROUP	24A-5
1	9S7248	MOUNTING GROUP	22C
1	.....	INSTALLATION INSTRUCTIONS FORM NO. GMG00163	

9S6857 ARRANGEMENT--88 U.S. GALLONS PER MINUTE--TRIPLE VALVE
FOR USE WITH 9R BULLDOZER, 9D RIPPER AND BLADE TILT CYLINDER

		CONSISTS OF:	
1	5J3691	TANK AND VALVE GROUP	12
1	5J4390	BULLDOZER LINES GROUP	26
1	7J4459	PUMP AND MOUNTING GROUP	18B
1	7S4765	BULLDOZER AND TILT LINKAGE GROUP	32F
1	8S4384	RIPPER BULLDOZER AND TILT LINES GROUP.	30H
1	8S4480	RIPPER BULLDOZER LINKAGE AND CONSOLE GROUP	32G
1	8S5793	RIPPER LINKAGE AND CONSOLE GROUP	32J
1	8S7014	PILOT LINES AND VALVE GROUP	30L
1	9S7247	PUMP LINES GROUP	24A-5
1	9S7248	MOUNTING GROUP	22C
1	.....	INSTALLATION INSTRUCTIONSFORM NO. GMG00163	

HYDRAULIC CONTROL ARRANGEMENTS

9S9441 Arrangement--88 U.S. Gallons per Minute
Double Valve--FOR USE WITH 9C BULLDOZER

Consists of:

			Page
1	5J3693	Tank and Valve Group	9
1	7J4459	Pump and Mounting Group	18B
1	7S4765	Bulldozer & Tilt Linkage Group	32F
1	9S7246	Pump Lines Group	24A-6
1	9S7422	Mounting Group	22B-8
1	9S9440	Bulldozer Lines Group	29A
1	.....	Installation Instruction Form GMG00163	

9S9442 Arrangement--88 U.S. Gallons per Minute
Triple Valve--FOR USE WITH 9C BULLDOZER
AND 9D RIPPER

Consists of:

1	5J3691	Tank and Valve Group	12
1	7J4459	Pump and Mounting Group	18B
1	1P1562	Pilot Lines & Valve Group	30N
1	7S4765	Bulldozer & Tilt Linkage Group	32F
1	8S5792	Linkage and Console Group	33
1	9S7247	Pump Lines Group	24A-5
1	9S7248	Mounting Group	22C
1	9S9440	Bulldozer Lines Group	29A
1	.....	Installation Instruction Form GMG00163	

HYDRAULIC CONTROL ARRANGEMENTS

2P4100 HYDRAULIC CONTROL ARRANGEMENT--88 U.S. GALLONS PER MINUTE--DOUBLE AND SINGLE VALVE--FOR USE WITH 9A OR 9C BULLDOZERS

		CONSISTS OF:	PAGE
1	5J3693	TANK AND VALVE GROUP.....	9
1	7J4459	PUMP AND MOUNTING GROUP.....	18B
	- OR -		
1	7J4457	PUMP GROUP.....	18B
	- OR -		
1	8J5409	GEAR PUMP GROUP.....	18B-1
	- OR -		
1	9J8766	GEAR PUMP GROUP.....	18B-2
1	2P3400	BULLDOZER LINES GROUP.....	26D
1	2P4109	MOUNTING GROUP.....	22C-2
1	7S4765	BULLDOZER & TILT LINKAGE GROUP.....	32F
1	9S7246	PUMP LINES GROUP.....	24A-6
1	.....	INSTALLATION INSTRUCTIONS FORM NO. GMG00163	

2P4101 HYDRAULIC CONTROL ARRANGEMENT--88 U.S. GALLONS PER MINUTE--DOUBLE VALVE--FOR USE WITH 9S OR 9U BULLDOZERS AND BLADE TILT CYLINDER

		CONSISTS OF:	
1	5J3693	TANK AND VALVE GROUP.....	9
1	7J4459	PUMP AND MOUNTING GROUP.....	18B
	- OR -		
1	7J4457	PUMP GROUP.....	18B
	- OR -		
1	8J5409	GEAR PUMP GROUP.....	18B-1
	- OR -		
1	9J8766	GEAR PUMP GROUP.....	18B-2
1	2P3400	BULLDOZER LINES GROUP.....	26D
1	2P4109	MOUNTING GROUP.....	22C-2
1	7S4765	BULLDOZER & TILT LINKAGE GROUP.....	32F
1	9S7246	PUMP LINES GROUP.....	24A-6
1	.....	INSTALLATION INSTRUCTIONS FORM NO. GMG00163	

2P4102 HYDRAULIC CONTROL ARRANGEMENT--88 U.S. GALLONS PER MINUTE--TRIPLE VALVE--FOR USE WITH 9A OR 9C BULLDOZER AND 9D RIPPER

		CONSISTS OF:	
1	5J3691	TANK AND VALVE GROUP.....	12
1	7J4459	PUMP AND MOUNTING GROUP.....	18B
	- OR -		
1	7J4457	PUMP GROUP.....	18B
	- OR -		
1	8J5409	GEAR PUMP GROUP.....	18B-1
	- OR -		
1	9J8766	GEAR PUMP GROUP.....	18B-2
1	1P4877	LINKAGE GROUP.....	33B
1	2P3400	BULLDOZER LINES GROUP.....	26D
1	2P4108	CONSOLE GROUP.....	33D
1	2P4109	MOUNTING GROUP.....	22C-2
1	7S4765	BULLDOZER AND TILT LINKAGE.....	32F
1	9S7246	PUMP LINES GROUP.....	24A-6
1	.....	INSTALLATION INSTRUCTIONS FORM GMG00163	

HYDRAULIC CONTROL ARRANGEMENT—Adjustable Ripper
For D9 Tractors Serial No. 66A8055—Up

2P4103 ARRANGEMENT--88 U.S. GALLONS PER MINUTE--TRIPLE VALVE--FOR USE WITH 9S OR 9U BULLDOZER, 9D RIPPER AND BLADE TILT CYLINDER

CONSISTS OF:

			PAGE
1	5J3691	TANK AND VALVE GROUP	12
1	7J4459	PUMP AND MOUNTING GROUP	18B
	- OR -		
1	7J4457	PUMP GROUP	18B
	- OR -		
1	8J5409	GEAR PUMP GROUP	18B-1
	- OR -		
1	9J8766	GEAR PUMP GROUP	18B-2
1	1P4877	LINKAGE GROUP	33B
1	2P3400	BULLDOZER LINES GROUP	26D
1	2P4108	CONSOLE GROUP	33D
1	2P4109	MOUNTING GROUP	22C-2
1	7S4765	BULLDOZER & TILT LINKAGE GROUP	32F
1	8S4383	BLADE TILT LINES GROUP	30E
1	9S7246	PUMP LINES GROUP	24A-6
1	.....	INSTALLATION INSTRUCTIONS FORM NO. GMG00163	

2P4107 ARRANGEMENT--88 U.S. GALLONS PER MINUTE--TRIPLE VALVE--FOR USE WITH 9R BULLDOZER, 9D RIPPER AND BLADE TILT CYLINDER

CONSISTS OF:

1	5J3691	TANK AND VALVE GROUP	12
1	7J4459	PUMP AND MOUNTING GROUP	18B
	- OR -		
1	7J4457	PUMP GROUP	18B
1	1P4877	LINKAGE GROUP	33B
1	2P3400	BULLDOZER LINES GROUP	26D
1	2P4108	CONSOLE GROUP	33D
1	2P4109	MOUNTING GROUP	22C-2
1	2P4110	RIPPER & BULLDOZER LINKAGE GROUP	32F
1	7S4765	BULLDOZER & TILT LINKAGE GROUP	32F
1	8S4384	RIPPER BULLDOZER & TILT LINES GROUP	30H
1	8S6919	LINES AND VALVE GROUP	30M
1	9S7246	PUMP LINES GROUP	24A-6
1	.....	INSTALLATION INSTRUCTION FORM GMG00163	

2P4106 Arrangement—88 U.S. Gallons per Minute—Double Valve—FOR USE WITH 9R BULLDOZER & BLADE TILT CYLINDER

		Consists of:	Page
1	5J3693	Tank and Valve Group	9
1	7J4459	Pump and Mounting Group	18B
	- or -		
1	7J4457	Pump Group	18B
1	2P3400	Bulldozer Lines Group	36D
1	2P4108	Console Group	33D
1	2P4109	Mounting Group	22C-2
1	2P4110	Ripper and Bulldozer Linkage Group	32F
1	7S4765	Bulldozer & Tilt Linkage Group	32F
1	8S4384	Ripper Bulldozer & Tilt Lines Group	30H
1	8S6919	Lines and Valve Group	30M
1	9S7246	Pump Lines Group	24A-6
1	.....	Installation Instruction Form GMG00163	

HYDRAULIC CONTROL ARRANGEMENTS—Adjustable Ripper
For D9 Tractors Serial No. 66A8055-Up

2P4104 ARRANGEMENT--88 U.S. GALLONS PER MINUTE--DOUBLE VALVE--FOR USE WITH 9C BULLDOZER

CONSISTS OF:

			PAGE
1	5J3693	TANK AND VALVE GROUP	9
1	7J4459	PUMP AND MOUNTING GROUP	18B
	- OR -		
1	7J4457	PUMP GROUP	18B
	- OR -		
1	8J5409	GEAR PUMP GROUP	18B-1
	- OR -		
1	9J8766	GEAR PUMP GROUP	18B-2
1	2P4109	MOUNTING GROUP	22C-1
1	7S4765	BULLDOZER & TILT LINKAGE GROUP	32F
1	9S7246	PUMP LINES GROUP	24A-6
1	9S9440	BULLDOZER LINES GROUP	29A
1	.....	INSTALLATION INSTRUCTION FORM GMG00163	

2P4105 ARRANGEMENT--88 U.S. GALLONS PER MINUTE--TRIPLE VALVE--FOR USE WITH 9C BULLDOZER AND 9D RIPPER

CONSISTS OF:

1	5J3691	TANK AND VALVE GROUP	12
1	1P4877	LINKAGE GROUP	33B
1	2P4108	CONSOLE GROUP	33D
1	2P4109	MOUNTING GROUP	22C-2
1	7J4459	PUMP AND MOUNTING GROUP	18B
	- OR -		
1	7J4457	PUMP GROUP	18B
	- OR -		
1	8J5409	GEAR PUMP GROUP	18B-1
	- OR -		
1	9J8766	GEAR PUMP GROUP	18B-2
1	7S4765	BULLDOZER & TILT LINKAGE GROUP	32F
1	9S7246	PUMP LINES GROUP	24A-6
1	9S9440	BULLDOZER LINES GROUP	29A
1	.....	INSTALLATION INSTRUCTIONS FORM GMG00163	

2P9675 Arrangement—88 U.S. Gallons per Minute—Triple Valve
FOR USE WITH 9A OR 9C BULLDOZER AND 9D RIPPER

		Consists of:	Page
1	5J3691	Tank and Valve Group	12
1	5J4390	Bulldozer Lines Group	26
1	7J4459	Pump and Mounting Group	18B
1	2P9882	Ripper Linkage Group	34C
1	7S4765	Bulldozer and Tilt Linkage Group	32F
1	9S7246	Pump Lines Group	24A-6
1	9S7422	Mounting Group	22B-8
1	.....	Installation Instructions Form GMG00163	

2P9676 Arrangement—88 U.S. Gallons per Minute—Triple Valve
FOR USE WITH 9S OR 9U BULLDOZER, 9D RIPPER AND BLADE TILT CYLINDER

		Consists of:	
1	5J3691	Tank and Valve Group	12
1	5J4390	Bulldozer Lines Group	26
1	7J4459	Pump and Mounting Group	18B
	- or -		
1	7J4457	Pump Group	18B
1	2P9882	Ripper Linkage Group	34C
1	7S4765	Bulldozer and Tilt Linkage Group	32F
1	8S4383	Tilt Lines Group	30E
1	9S7246	Pump Lines Group	24A-6
1	9S7422	Mounting Group	22B-8
1	.....	Installation Instructions Form GMG00163	

HYDRAULIC CONTROL ARRANGEMENTS
For D9 Tractors Serial No. 66A3266 to 66A8054 inclusive

2P9677 Arrangement—88 U.S. Gallons per Minute—Double Valve
FOR USE WITH 9C BULLDOZER AND 9D RIPPER

Consists of:

1	5J3691	Tank and Valve Group	12
1	7J4459	Pump and Mounting Group	18B
1	2P9882	Ripper Linkage Group	34C
1	7S4765	Bulldozer and Tilt Linkage Group	32F
1	9S7246	Pump Lines Group	24A-6
1	9S4722	Mounting Group	22B-8
1	.....	Installation Instruction Form GMG00163	

2P9678 Arrangement—88 U.S. Gallons per Minute—Triple Valve
FOR USE WITH 9R BULLDOZER, 9D RIPPER AND
BLADE TILT CYLINDER

Consists of:

1	5J3691	Tank and Valve Group	12
1	5J4390	Bulldozer Lines Group	26
1	7J4459	Pump and Mounting Group	18B
1	2P9882	Ripper Linkage Group	34C
1	7S4765	Bulldozer and Tilt Linkage Group	32F
1	8S4384	Ripper Bulldozer and Tilt Lines Group	30H
1	8S4480	Ripper Bulldozer Linkage & Console Group	32G
1	8S7014	Pilot Lines and Valve Group	30L
1	9S7247	Pump Lines Group	24A-5
1	9S7248	Mounting Group	22C
1	.....	Installation Instructions Form GMG00163	

HYDRAULIC CONTROL ARRANGEMENTS
For D9 Tractors Serial No. 66a3266 to 66A8054 inclusive

3P435 ARRANGEMENT--88 U.S. GALLONS PER MINUTE--TRIPLE VALVE--FOR USE WITH 9A OR 9C BULLDOZER AND 9D RIPPER

CONSISTS OF:

			PAGE
1	5J3691	TANK AND VALVE GROUP	12
1	7J4459	PUMP AND MOUNTING GROUP	18B
	- OR -		
1	7J4457	PUMP GROUP	18B
	- OR -		
1	8J5409	GEAR PUMP GROUP	18B-1
	- OR -		
1	9J8766	GEAR PUMP GROUP	18B-2
1	2P3400	BULLDOZER LINES GROUP	26D
1	2P4109	MOUNTING GROUP	22C-2
1	3P434	IMPLEMENT LINKAGE GROUP	33C
1	7S4765	BULLDOZER & TILT LINKAGE GROUP	32F
1	9S7246	PUMP LINES GROUP	24A-6
1	.....	INSTALLATION INSTRUCTIONS FORM GMG00163	

3P436 ARRANGEMENT--88 U.S. GALLONS PER MINUTE--TRIPLE VALVE--FOR USE WITH 9S OR 9U BULLDOZER, 9D RIPPER AND BLADE TILT CYLINDER

CONSISTS OF:

1	5J3691	TANK AND VALVE GROUP	12
1	7J4459	PUMP AND MOUNTING GROUP	18B
	- OR -		
1	7J4457	PUMP GROUP	18B
	- OR -		
1	8J5409	GEAR PUMP GROUP	18B-1
	- OR -		
1	9J8766	GEAR PUMP GROUP	18B-2
1	2P3400	BULLDOZER LINES GROUP	26D
1	2P4109	MOUNTING GROUP	22C-2
1	3P434	IMPLEMENT LINKAGE GROUP	33C
1	7S4765	BULLDOZER AND TILT LINKAGE GROUP	32F
1	8S4383	TILT LINES GROUP	30E
1	9S7246	PUMP LINES GROUP	24A-6
1	.....	INSTALLATION INSTRUCTIONS FORM GMG00163	

3P437 ARRANGEMENT--88 U.S. GALLONS PER MINUTE--TRIPLE VALVE--FOR USE WITH 9C BULLDOZER AND 9D RIPPER

		CONSISTS OF:	PAGE
1	5J3691	TANK AND VALVE GROUP	12
1	7J4459	PUMP AND MOUNTING GROUP	18B
	- OR -		
1	7J4457	PUMP GROUP	18B
	- OR -		
1	8J5409	GEAR PUMP GROUP	18B-1
	- OR -		
1	9J8766	GEAR PUMP GROUP	18B-2
1	2P4109	MOUNTING GROUP	22C-2
1	3P434	IMPLEMENT LINKAGE GROUP	33C
1	7S4765	BULLDOZER & TILT LINKAGE GROUP	32F
1	9S7246	PUMP LINES GROUP	24A-6
1	9S9440	BULLDOZER LINES GROUP	29A
1	.....	INSTALLATION INSTRUCTION FORM GMG00163	

3P438 ARRANGEMENT--88 U.S. GALLONS PER MINUTE--TRIPLE VALVE--FOR USE WITH 9R BULLDOZER, 9D RIPPER AND BLADE TILT CYLINDER

		CONSISTS OF:	
1	5J3691	TANK AND VALVE GROUP	12
1	7J4459	PUMP AND MOUNTING GROUP	18B
	- OR -		
1	7J4457	PUMP GROUP	18B
	- OR -		
1	2P3400	BULLDOZER LINES GROUP	26D
1	2P4108	CONSOLE GROUP	33D
1	2P4109	MOUNTING GROUP	22C-2
1	2P4110	RIPPER & BULLDOZER LINKAGE GROUP	32G-2
1	3P434	IMPLEMENT LINKAGE GROUP	33C
1	7S4765	BULLDOZER & TILT LINKAGE GROUP	32F
1	8S4384	RIPPER BULLDOZER AND TILT LINES	30H
1	8S6919	LINES AND VALVE GROUP	30M
1	9S7246	PUMP LINES GROUP	24A-6
1	.....	INSTALLATION INSTRUCTIONS FORM GMG00163	

HYDRAULIC CONTROL ARRANGEMENTS—Solid Link Ripper
For D9 Tractors Serial No. 66A8055—Up

6J992 FIELD CONVERSION GROUP—2 to 3 Valve
Effective with 183 and 193 Hydraulic Controls Serial No. 27H1-Up
5J2956 Control Valve Group parts are shown on Page 18. Only separate parts serviced
When complete Group is required order 6J2247 shown on Page 8B

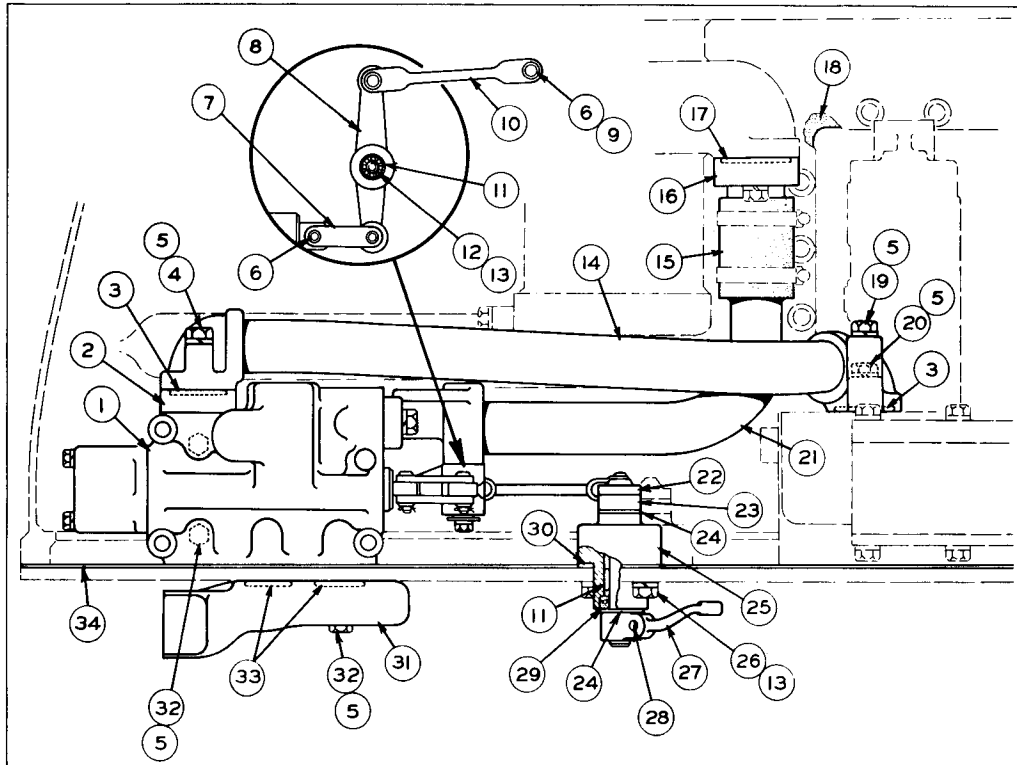

REF NO	PART NUMBER	DESCRIPTION	QTY
1	5J2956	VALVE GROUP (See Separate Illustration)	1
2	4K1272	SPACER	1
3	4J523	SEAL	2
4	V-375	BOLT	2
5	3B4508	LOCKWASHER	10
6	1J4384	PIN	4
	3B4615	COTTER PIN	4
7	1J4603	LINK	2
8	5J2979	LEVER	1
9	7H3912	BUSHING	3
10	4K1064	ROD	1
11	7F7983	BEARING	4
12	S-509	BOLT	1
	3F1417	WASHER	1
13	3B4506	LOCKWASHER	5
14	5J2837	TUBE ASSEM.	1
15	4J7313	HOSE	1
16	5J2978	TUBE ASSEM.	1
17	1H8720	SEAL	1
18	5J3140	GASKET	1
19	1D4566	BOLT	1
20	1A1460	BOLT	1
21	5J2871	TUBE ASSEM.	1
22	5J3897	LEVER ASSEM.	1
23	2H5746	ADAPTER	1
24	8B4037	WASHER	2
25	5J880	HOUSING	1
26	1A2029	BOLT	4
27	5J3200	LEVER	1
	1B8706	KEY	1
28	S-1588	BOLT	1
29	3J4407	SEAL	1
30	4J8425	GASKET	1
31	5J3136	MANIFOLD	1
32	3322-A	BOLT	6
33	5J1357	SEAL	2
34	5J3112	GASKET	1

96655

ONLY "CATERPILLAR" PARTS GIVE "CATERPILLAR" PERFORMANCE

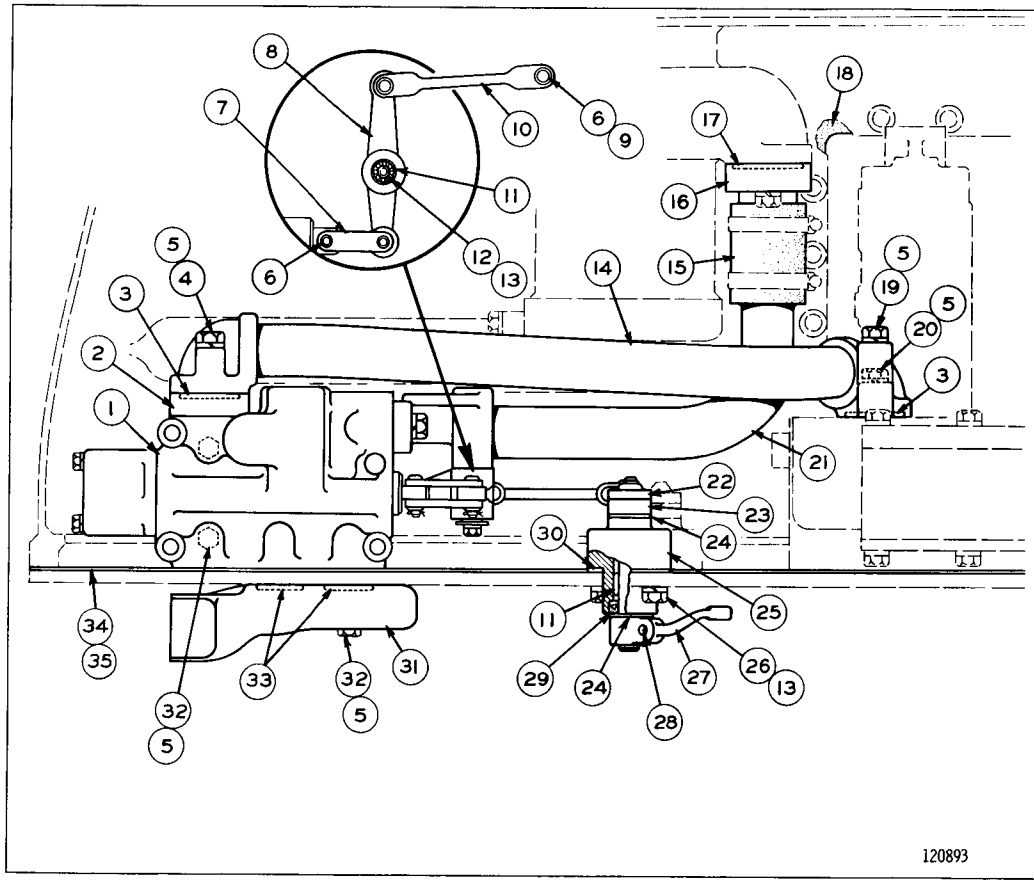

REF NO	PART NUMBER	DESCRIPTION	QTY
1	5J2956	VALVE GROUP (See Separate Illustration)	1
2	4K1272	SPACER	1
3	4J523	SEAL	2
4	V-375	BOLT	2
5	3B4508	LOCKWASHER	10
6	1J4384	PIN	4
	3B4615	COTTER PIN	4
7	1J4603	LINK	2
8	5J2979	LEVER	1
9	7H3912	BUSHING	3
10	4K1064	ROD	1
11	7F7983	BEARING	4
12	S-509	BOLT	1
	3F1417	WASHER	1
13	3B4506	LOCKWASHER	5
14	6J1930	TUBE ASSEM.	1
15	4J7313	HOSE	1
16	5J2978	TUBE ASSEM.	1
17	1H8720	SEAL	1
18	5J3140	GASKET	1
19	1D4566	BOLT	1
20	1A1460	BOLT	1
21	5J2871	TUBE ASSEM.	1
22	5J3897	LEVER ASSEM.	1
23	2H5746	ADAPTER	1
24	8B4037	WASHER	2
25	5J880	HOUSING	1
26	1A2029	BOLT	4
27	5J3200	LEVER	1
	1B8706	KEY	1
28	S-1588	BOLT	1
29	3J4407	SEAL	1
30	4J8425	GASKET	1
31	5J3136	MANIFOLD	1
32	3322-A	BOLT	6
33	5J1357	SEAL	2
34	5J3112	GASKET	1
35	6J1053	GASKET	1

6J2247 FIELD CONVERSION GROUP—2 to 3 Valve
Effective with 183 and 193 Hydraulic Controls Serial No. 27H1-Up
5J2956 Control Valve Group parts are shown on Page 18. 8S9784 Complete Gasket Kit is available

6J2247 FIELD CONVERSION GROUP—2 to 3 Valve-Type 2
Effective with 183 & 193 Hydraulic Controls Serial No. 27H1-Up
7J4151 Valve parts are shown on Page 17B. 8S9784 Complete Gasket Kit is available

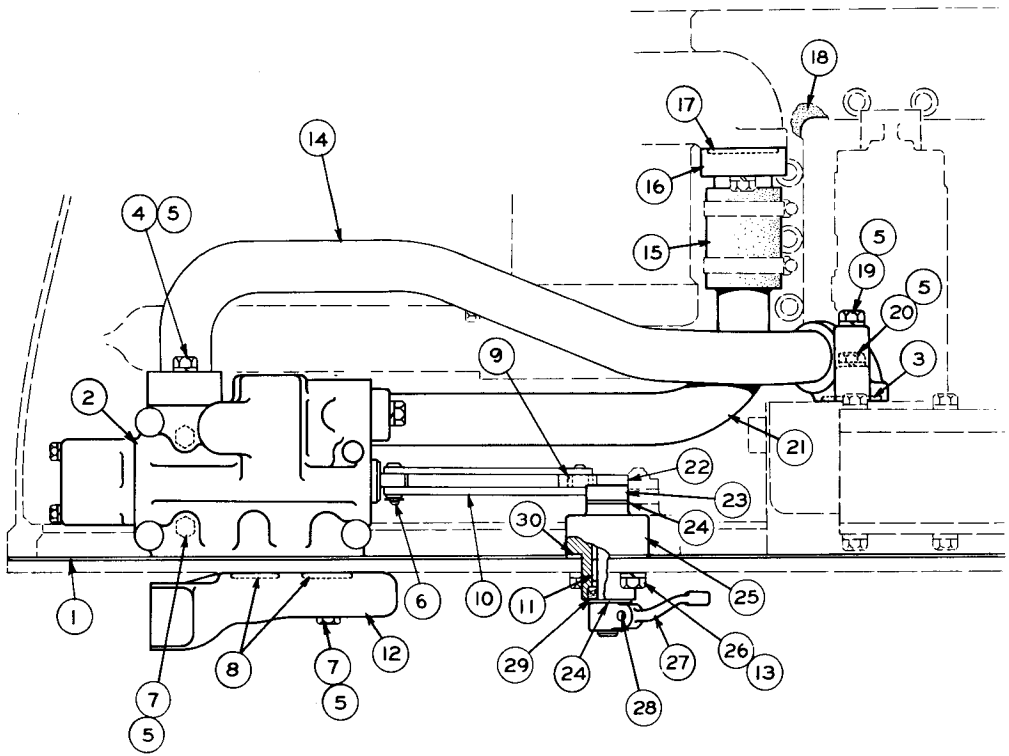

REF. NO.	PART NUMBER	DESCRIPTION	QTY
1	5J3112	GASKET-----(Use as Required)-----	1
	6J1053	GASKET------(Use as required)----	1
2	7J4151	VALVE GROUP---------- (See Separate Illustration)	1
3	4J523	SEAL----------	1
4	S1587	BOLT----------	2
5	3B4508	LOCKWASHER----------	10
6	5F9199	PIN----------	2
	8S7803	RETAINER----------	2
7	9S1366	BOLT----------	6
8	6J3625	SEAL----------	2
9	7H3912	BUSHING----------	1
10	7J4123	LINK----------	2
11	7F7983	BEARING----------	2
12	5J3136	MANIFOLD----------	1
13	3B4506	LOCKWASHER----------	4
14	7J1247	TUBE ASSEM.----------	1
15	4J7313	HOSE----------	1
16	5J2978	TUBE ASSEM.----------	1
17	1H8720	SEAL----------	1
18	5J3140	GASKET----------	1
19	1D4566	BOLT----------	1
20	1A1460	BOLT----------	1
21	5J2871	TUBE ASSEM.----------	1
22	7J4122	LEVER ASSEM.----------	1
23	2H5746	ADAPTER----------	1
24	8B4037	WASHER----------	2
25	5J880	HOUSING ASSEM.----------	1
26	1A2029	BOLT----------	4
27	5J3200	LEVER----------	1
	1B8706	KEY----------	1
28	S1588	BOLT----------	1
29	3J4407	SEAL----------	1
30	4J8425	GASKET----------	1

132736

ONLY "CATERPILLAR" PARTS GIVE "CATERPILLAR" PERFORMANCE

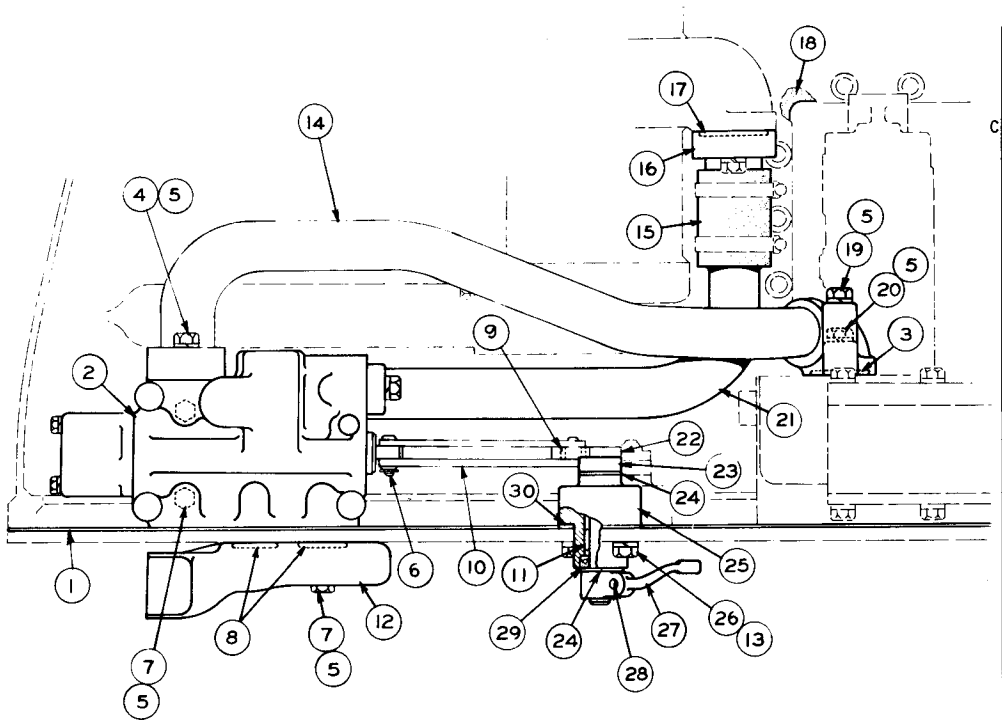

REF. NO.	PART NUMBER	DESCRIPTION	QTY
1	5J3112	GASKET-----(Use as Required)-----	1
	6J1053	GASKET------(Use as required)----	1
C 2	8J8432	VALVE GROUP---------- (Separate Illustration)	1
3	4J523	SEAL----------	1
4	S1587	BOLT----------	2
5	3B4508	LOCKWASHER----------	10
6	5F9199	PIN----------	2
	8S7803	RETAINER----------	2
7	9S1366	BOLT----------	6
8	6J3625	SEAL----------	2
9	7H3912	BUSHING----------	1
10	7J4123	LINK----------	2
11	7F7983	BEARING----------	2
12	5J3136	MANIFOLD----------	1
13	3B4506	LOCKWASHER----------	4
14	7J1247	TUBE ASSEM.----------	1
15	4J7313	HOSE----------	1
16	5J2978	TUBE ASSEM.----------	1
17	1H8720	SEAL----------	1
18	5J3140	GASKET----------	1
19	1D4566	BOLT----------	1
20	1A1460	BOLT----------	1
21	5J2871	TUBE ASSEM.----------	1
22	7J4122	LEVER ASSEM.----------	1
23	2H5746	ADAPTER----------	1
24	8B4037	WASHER----------	2
25	5J880	HOUSING ASSEM.----------	1
26	1A2029	BOLT----------	4
27	5J3200	LEVER----------	1
	1B8706	KEY----------	1
28	S1588	BOLT----------	1
29	3J4407	SEAL----------	1
30	4J8425	GASKET----------	1

C INDICATES CHANGE

141508

6J2247 FIELD CONVERSION GROUP—2 to 3 Valve—Type 3
183 & 193 Hydraulic Controls Serial No. 27H1-Up
8J8432 Valve parts are shown on Page 8F
8S9784 Complete Gasket Kit is available

8J8600 FIELD CONVERSION GROUP—2 to 3 Valve
183 and 193 Hydraulic Controls Serial No. 27H1-Up
8J8432 Control Valve parts are shown on Page 8F

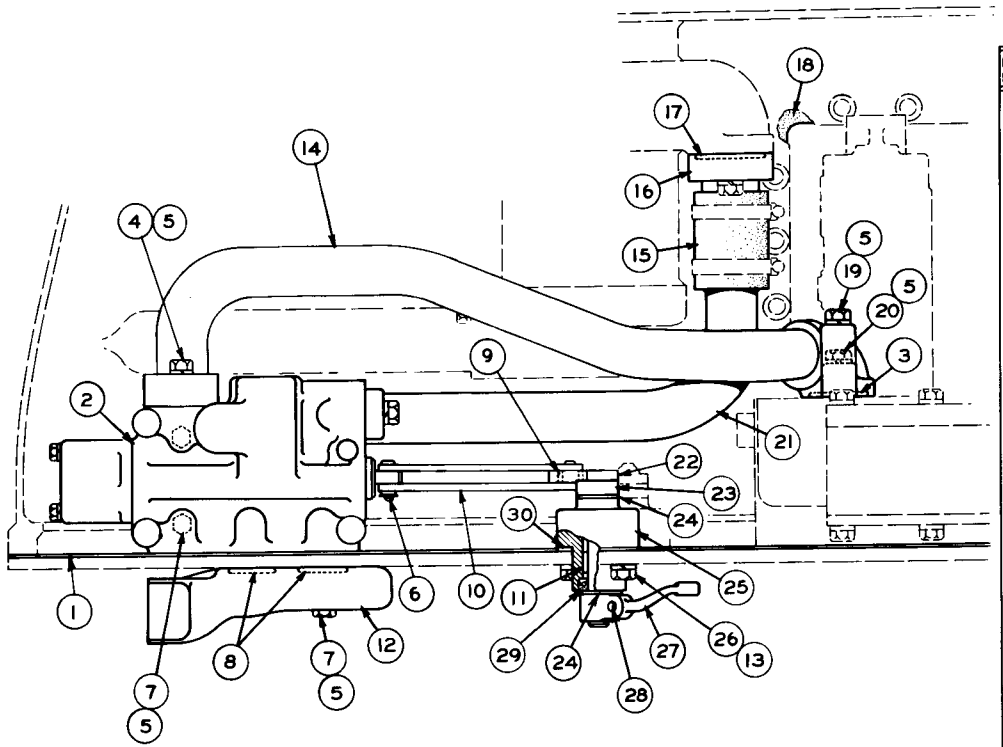

REF. NO.	PART NUMBER	DESCRIPTION	QTY
1	5J3112	GASKET-----(Use as Required)-----	1
	6J1053	GASKET------(Use as required)----	1
2	8J8432	VALVE GROUP---------- (Separate Illustration)	1
3	4J523	SEAL----------	1
4	S1587	BOLT----------	2
5	3B4508	LOCKWASHER----------	10
6	5F9199	PIN----------	2
	8S7803	RETAINER----------	2
7	9S1366	BOLT----------	6
8	6J3625	SEAL----------	2
9	7H3912	BUSHING----------	1
10	7J4123	LINK----------	2
11	7F7983	BEARING----------	2
12	5J3136	MANIFOLD----------	1
13	3B4506	LOCKWASHER----------	4
14	7J1247	TUBE ASSEM.----------	1
15	4J7313	HOSE----------	1
16	5J2978	TUBE ASSEM.----------	1
17	1H8720	SEAL----------	1
18	5J3140	GASKET----------	1
19	1D4566	BOLT----------	1
20	1A1460	BOLT----------	1
21	5J2871	TUBE ASSEM.----------	1
22	7J4122	LEVER ASSEM.----------	1
23	2H5746	ADAPTER----------	1
24	8B4037	WASHER----------	2
25	5J880	HOUSING ASSEM.----------	1
26	1A2029	BOLT----------	4
27	5J3200	LEVER----------	1
	1B8706	KEY----------	1
28	S1588	BOLT----------	1
29	3J4407	SEAL----------	1
30	4J8425	GASKET----------	1

141511

ONLY "CATERPILLAR" PARTS GIVE "CATERPILLAR" PERFORMANCE

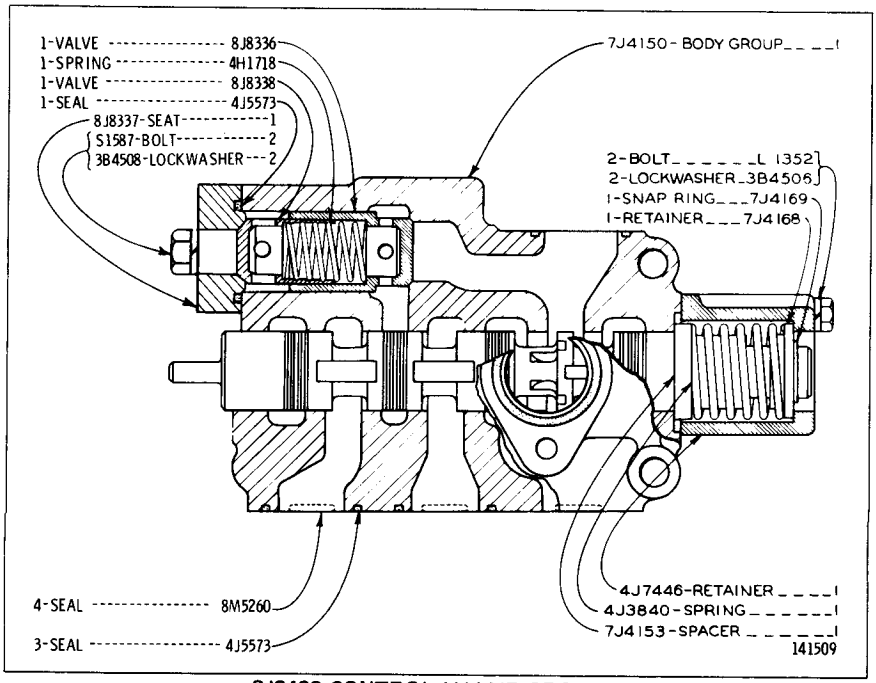

8J8432 CONTROL VALVE GROUP
Serial No. 27H1-Up and 28H12746-Up
Part of 6J2247 and 8J8600 Conversion Groups and 5J3691 Tank & Valve Group shown on Pages 8D, 8E, 14Z-5 and 14Z-8

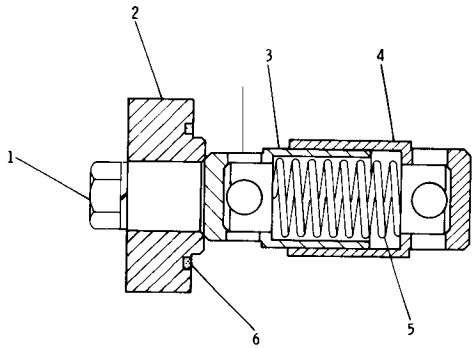

REF. NO.	PART NUMBER	DESCRIPTION	QTY
1	S1587	BOLT	2
	3B4508	LOCKWASHER	2
2	8J8337	SEAT	1
3	8J8338	VALVE	1
4	8J8336	VALVE	1
5	4H1718	SPRING	1
6	4J5573	SEAL	1

8J8780 RIPPER VALVE GROUP—Field Installation
Serial No. 27H1-Up and 28H12746-Up
Note: Eliminates bulging of tanks because of excess pressure when ripper is dropped with dead engine

5J3693 TANK AND VALVE GROUP—As Viewed from Rear of Tractor—Part 1 of 3
183 & 193 Hydraulic Controls Serial No. 27H1 to 27H374 inclusive

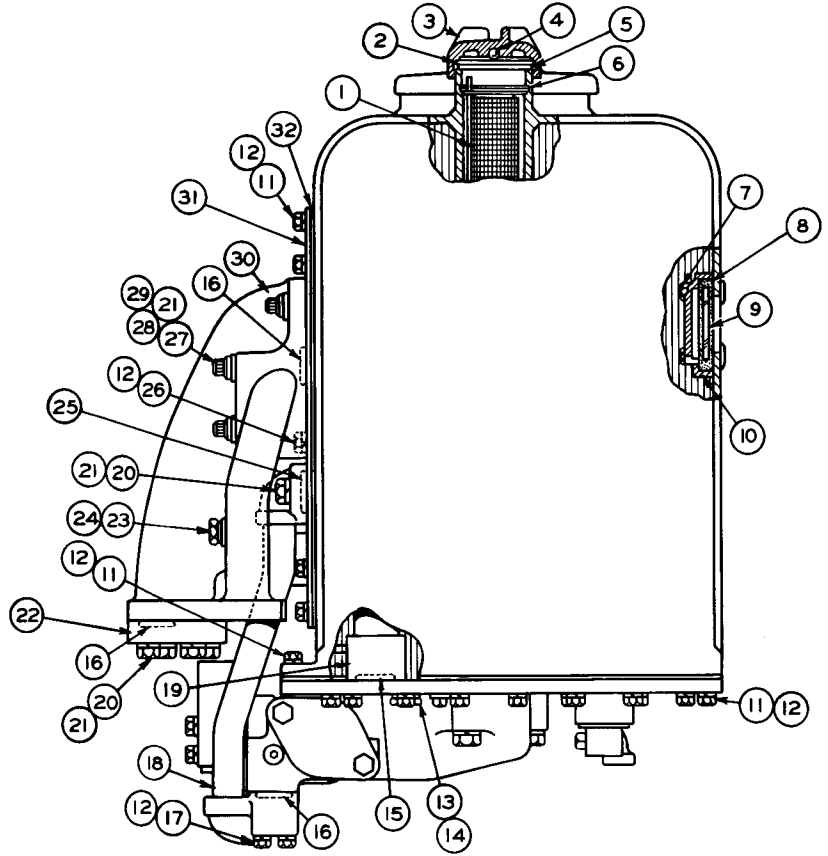

REF. NO.	PART NUMBER	DESCRIPTION	QTY
1	2J2521	STRAINER ASSEM.	1
2	6H5139	PLATE	1
3	7H1447	CAP	1
4	7B6368	BALL	1
5	9H6454	GASKET	1
6	6H9361	RING	1
7	4J8265	NUT	4
8	4J8251	GROMMET	1
9	4J8252	GLASS	1
10	4J8250	RETAINER	1
11	1A2029	BOLT	68
12	3B4506	LOCKWASHER	73
13	7M5897	PLUG ASSEM.	1
14	2M9780	SEAL (Part of Plug Assem. 7M5897)	1
15	8F3469	SEAL	3
16	5J1584	SEAL	6
17	S-1590	BOLT	4
18	5J3480	TUBE ASSEM. (11.55" long overall) (5J3263 Valve to 5J3065 Cover Assem.)	1
19	5J2953	TUBE ASSEM. (16.65" long overall)	1
20	S-1585	BOLT	6
21	3B4508	LOCKWASHER	12
22	5J3545	COVER	1
23	5M7908	PLUG ASSEM.	1
24	3J1907	SEAL (Part of Plug Assem. 5M7908)	1
25	5J1356	SEAL	1
26	L-1351	BOLT	1
27	5J5793	BOLT (2" Long)	1
28	5J5794	BOLT (3.5" Long)	2
29	4K5175	BOLT (1.5" Long)	3
30	5J3449	MANIFOLD	1
31	5J3065	COVER ASSEM.	1
32	5J3140	GASKET	1

76562

ONLY "CATERPILLAR" PARTS GIVE "CATERPILLAR" PERFORMANCE

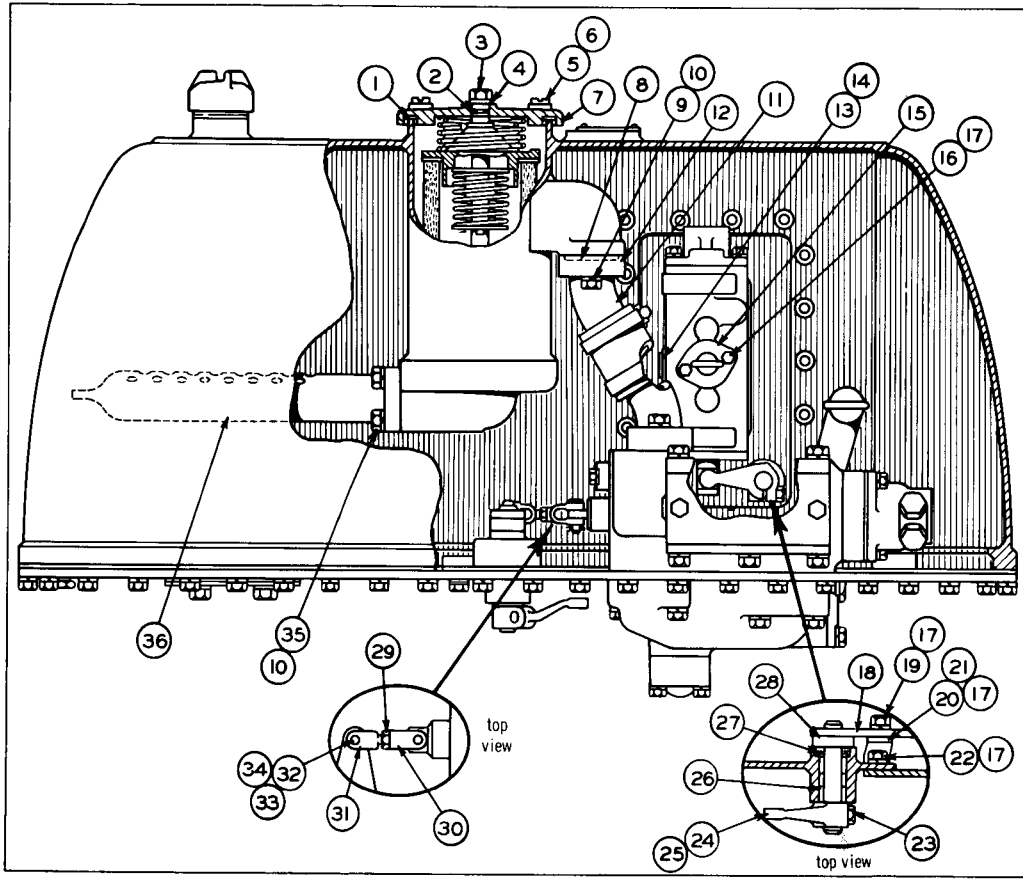

REF NO	PART NUMBER	DESCRIPTION	QTY
1	4K1557	GASKET	1
2	6F4855	SEAL	1
3	5J1179	BOLT ASSEM.	1
4	3B9363	WASHER	1
5	2J2864	PLUG	2
6	6F5559	SEAL	2
7	4K1498	COVER	1
8	8F6711	SEAL	1
9	S-1587	BOLT	2
10	3B4508	LOCKWASHER	6
11	5J3258	TUBE ASSEM.	1
12	5J3250	FLANGE (Part of Tube Assem. 5J3258)	1
13	3J2493	PLUG ASSEM.	1
14	3K360	SEAL (Part of Plug Assem. 3J2493)	1
15	5J2910	TUBE ASSEM.	1
16	S-1591	BOLT	2
17	3B4506	LOCKWASHER	5
18	5J3541	LEVER ASSEM.	1
19	S-509	BOLT	1
20	5J4448	STRAP	1
21	S-1588	BOLT	1
22	L-1351	BOLT	1
23	1A2209	BOLT	1
24	3J7582	LEVER	1
25	1B8707	KEY	1
26	7F7983	BEARING	2
27	3J4407	SEAL	1
28	7M2360	WASHER	1
29	5B9079	NUT	1
30	4J8922	END	1
31	1J8490	ROD	1
32	1J4384	PIN	2
33	3B4615	COTTER PIN	2
34	7H3912	BUSHING	1
35	S-1585	BOLT	4
36	5J2886	TUBE ASSEM.	1

95759

5J3693 TANK AND VALVE GROUP—As Viewed from Right Hand Side of Tractor—Part 2 of 3
183 & 193 Hydraulic Controls Serial No. 27H1 to 27H374 inclusive

5J3693 TANK AND VALVE GROUP—As Viewed from Right Hand Side of Tractor—Part 3 of 3
183 & 193 Hydraulic Controls Serial No. 27H1 to 27H374 inclusive
5J3263, 5J3039 & 5J3067 Valve parts are shown on Pages 15, 16 & 16B

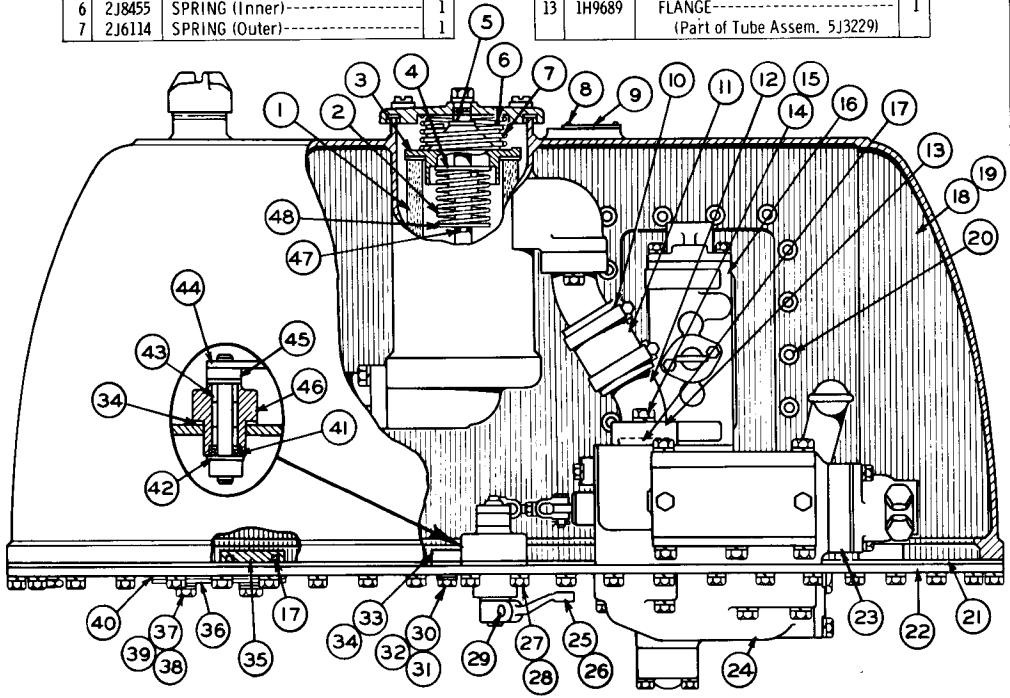

REF NO	PART NUMBER	DESCRIPTION	QTY
1	4J6064	ELEMENT ASSEM.	1
2	5J1283	SPRING	1
3	5J1473	SEAT ASSEM.	1
4	2J918	VALVE	1
5	3F566	WASHER	1
6	2J8455	SPRING (Inner)	1
7	2J6114	SPRING (Outer)	1

REF NO	PART NUMBER	DESCRIPTION	QTY
8	4B4158	SCREW	2
9	2M6831	PLATE (Serial Number)	1
10	2J6540	CLAMP	2
11	4J7313	HOSE (3.38" Long)	1
12	5J3229	TUBE ASSEM.	1
13	1H9689	FLANGE	1
		(Part of Tube Assem. 5J3229)	

REF NO	PART NUMBER	DESCRIPTION	QTY
14	S-1587	BOLT	2
15	3B4508	LOCKWASHER	2
16	5J3067	CONTROL VALVE GROUP (See Separate Illustration)	1
17	1H9696	SEAL	3
18	5J2862	TANK ASSEM.	1
19	5J96	STUD	4
20	8M5362	BOSS	17
		(Parts of Tank Assem. 5J2862)	
21	5J3112	GASKET	1
22	5J3090	PLATE	1
23	5J3039	CONTROL VALVE GROUP (See Separate Illustration)	1
24	5J3263	RELIEF VALVE GROUP (See Separate Illustration)	1
25	5J3200	LEVER	1
26	1B8706	KEY	1
27	1A2029	BOLT	4
28	3B4506	LOCKWASHER	4
29	S-1588	BOLT	1
30	S-1594	BOLT	4
31	5L5840	WASHER	4
32	5B9628	WASHER	4
33	3J9306	COVER	1
34	4J8425	GASKET	2
35	3J9298	COVER	2
36	3J9297	COVER	2
37	S-1595	BOLT	4
38	1K4703	WASHER	4
39	5L5180	WASHER	4
40	2J7606	GASKET	2
41	3J4407	SEAL	1
42	8B4037	WASHER	1
43	7F7983	BEARING	2
44	5J3117	LEVER ASSEM.	1
45	2H5746	ADAPTER	1
46	5J880	HOUSING	1
47	3B5301	COTTER PIN	1
48	2J917	RETAINER	1

77082

ONLY "CATERPILLAR" PARTS GIVE "CATERPILLAR" PERFORMANCE

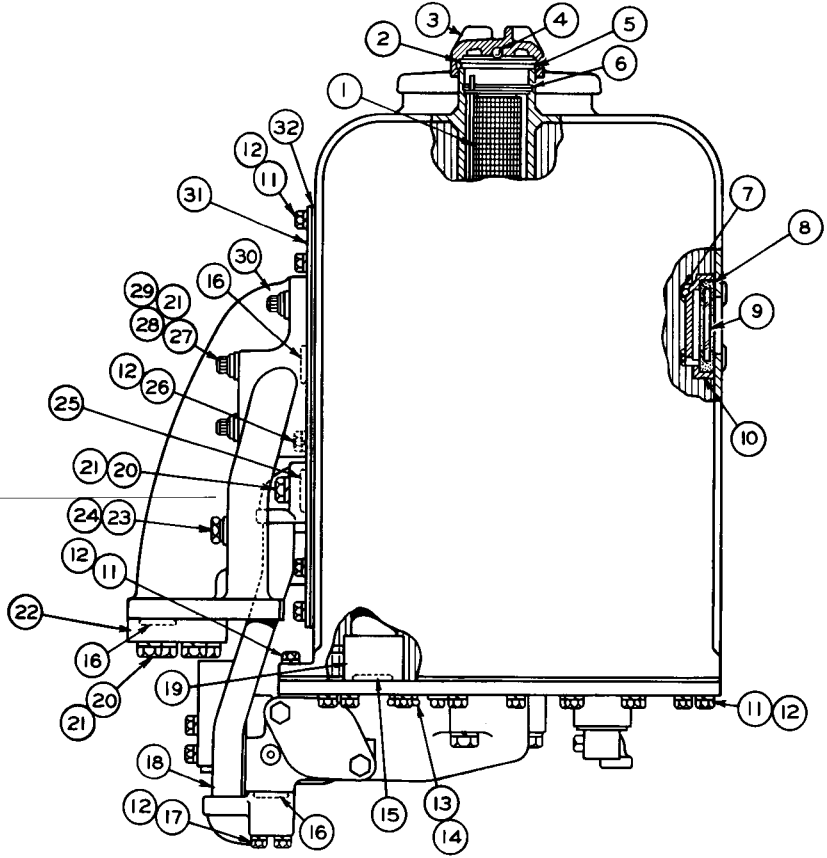

REF NO	PART NUMBER	DESCRIPTION	QTY
1	2J2521	STRAINER ASSEM.	1
2	6H5139	PLATE	1
3	7H1447	CAP	1
4	7B6368	BALL	1
5	9H6454	GASKET	1
6	6H9361	RING	1
7	4J8265	NUT	4
8	4J8251	GROMMET	1
9	4J8252	GLASS	1
10	4J8250	RETAINER	1
11	1A2029	BOLT	68
12	3B4506	LOCKWASHER	73
13	7M5897	PLUG ASSEM.	1
14	2M9780	SEAL (Part of Plug Assem. 7M5897)	1
15	8F3469	SEAL	3
16	5J1584	SEAL	6
17	S-1590	BOLT	4
18	5J3480	TUBE ASSEM. (11.55" long overall) (5J3263 Valve to 5J3065 Cover Assem.)	1
19	5J2953	TUBE ASSEM. (16.65" long overall)	1
20	S-1585	BOLT	6
21	3B4508	LOCKWASHER	12
22	5J3545	COVER	1
23	5M7908	PLUG ASSEM.	1
24	3J1907	SEAL (Part of Plug Assem. 5M7908)	1
25	5J1356	SEAL	1
26	L-1351	BOLT	1
27	5J5793	BOLT (2" Long)	1
28	5J5794	BOLT (3.5" Long)	2
29	4K5175	BOLT (1.5" Long)	3
30	5J3449	MANIFOLD	1
31	5J3065	COVER ASSEM.	1
32	5J3140	GASKET	1

76562

5J3693 TANK AND VALVE GROUP—As Viewed from Rear of Tractor—Part 1 of 3
183 & 193 Hydraulic Controls Serial No. 27H375 to 27H853 inclusive

5J3693 TANK AND VALVE GROUP—As Viewed from Right Hand Side of Tractor—Part 2 of 3
183 & 193 Hydraulic Controls Serial No. 27H375 to 27H853 inclusive

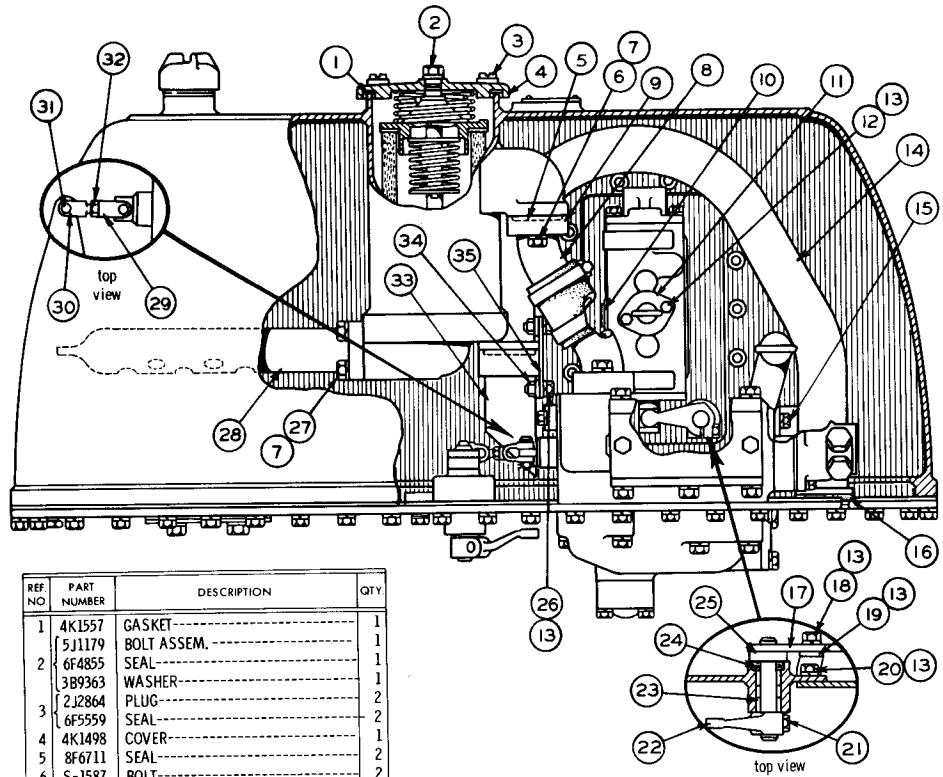

REF NO	PART NUMBER	DESCRIPTION	QTY
1	4K1557	GASKET	1
2	5J1179	BOLT ASSEM.	1
	6F4855	SEAL	1
	3B9363	WASHER	1
3	2J2864	PLUG	2
	6F5559	SEAL	2
4	4K1498	COVER	1
5	8F6711	SEAL	2
6	S-1587	BOLT	2

REF NO	PART NUMBER	DESCRIPTION	QTY
7	3B4508	LOCKWASHER	6
8	5J3258	TUBE ASSEM.	1
9	5J3250	FLANGE (Part of 5J3258 Tube Assem.)	1
10	3J2493	PLUG ASSEM.	1
	3K360	SEAL (Part of 3J2493 Plug Assem.)	1
11	5J2910	TUBE ASSEM.	1
12	S-1591	BOLT	2
13	3B4506	LOCKWASHER	7
14	5J9749	TUBE ASSEM.	1
15	T-772	BOLT	1
	1K4703	WASHER	1
16	3H2652	SEAL	1
17	5J3541	LEVER ASSEM.	1
18	S-509	BOLT	1
19	5J9123	STRAP	1
	S-1588	BOLT	1
20	L-1351	BOLT	1
21	1A2209	BOLT	1
22	3J7582	LEVER	1
	1B8707	KEY	1
23	7F7983	BEARING	2
24	3J4407	SEAL	1
25	7M2360	WASHER	1
26	S-1594	BOLT	2
27	S-1585	BOLT	4
28	5J2886	TUBE ASSEM.	1
29	4J8922	END	1
30	1J8490	ROD	1
31	1J4384	PIN	2
	3B4615	COTTER PIN	2
	7H3912	BUSHING	1
32	5B9079	NUT	1
33	5J9750	TUBE ASSEM.	1
34	9F2978	NUT (1 in 5J9750 & 5J9749 Tube Assem.)	2
35	5J9746	BRACKET	1

121040

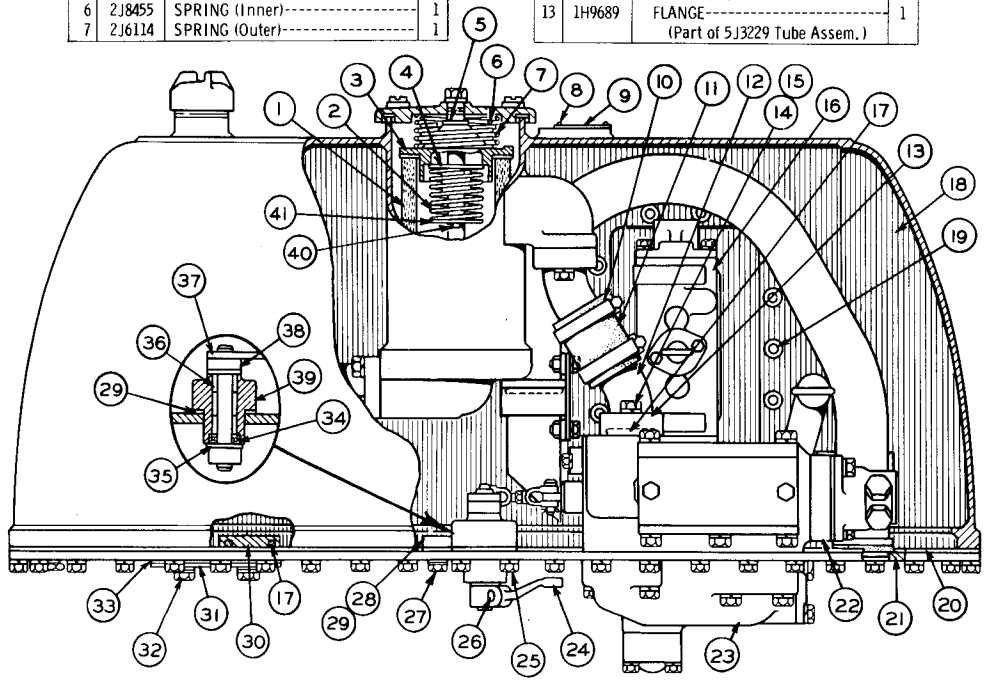

REF NO	PART NUMBER	DESCRIPTION	QTY
1	4J6064	ELEMENT ASSEM.	1
2	5J1283	SPRING	1
3	5J1473	SEAT ASSEM.	1
4	2J918	VALVE	1
5	3F566	WASHER	1
6	2J8455	SPRING (Inner)	1
7	2J6114	SPRING (Outer)	1

REF NO	PART NUMBER	DESCRIPTION	QTY
8	4B4158	SCREW	2
9	2M6831	PLATE------(Serial Number)------	1
10	2J6540	CLAMP	2
11	4J7313	HOSE--------(3.38" Long)---------	1
12	5J3229	TUBE ASSEM.	1
13	1H9689	FLANGE (Part of 5J3229 Tube Assem.)	1

REF NO	PART NUMBER	DESCRIPTION	QTY
14	S-1587	BOLT	2
15	3B4508	LOCKWASHER	2
16	5J3067	CONTROL VALVE GROUP (See Separate Illustration)	1
17	1H9696	SEAL	3
18	5J2862	TANK ASSEM.	1
	5J96	STUD	4
19	6J2237	BOSS (Parts of 5J2862 Tank Assem.)	18
20	5J3112	GASKET	1
21	5J3090	PLATE	1
22	5J3039	CONTROL VALVE GROUP (See Separate Illustration)	1
23	5J3263	RELIEF VALVE GROUP (See Separate Illustration)	1
24	5J3200	LEVER	1
	1B8706	KEY	1
25	1A2029	BOLT	4
	3B4506	LOCKWASHER	4
26	S-1588	BOLT	1
27	S-1594	BOLT	4
	5L5840	WASHER ( )	4
	5B9628	WASHER ( )	4
28	3J9306	COVER	1
29	4J8425	GASKET	2
30	3J9298	COVER	2
31	3J9297	COVER	2
32	S-1595	BOLT	4
	1K4703	WASHER ( )	4
	5L5180	WASHER ( )	4
33	2J7606	GASKET	2
34	3J4407	SEAL	1
35	8B4037	WASHER	1
36	7F7983	BEARING	2
37	5J3117	LEVER ASSEM.	1
38	2H5746	ADAPTER	1
39	5J880	HOUSING	1
40	3B5301	COTTER PIN	1
41	2J917	RETAINER	1

121041

5J3693 TANK AND VALVE GROUP—As Viewed from Right Hand Side of Tractor—Part 3 of 3
183 & 193 Hydraulic Controls Serial No. 27H375 to 27H853 inclusive
5J3263, 5J3039 & 5J3067 Valve parts are shown on Pages 15, 16 & 16B

5J3693 TANK AND VALVE GROUP—As Viewed from Rear of Tractor—Part 1 of 3
183 & 193 Hydraulic Controls Serial No. 27H854 to 27H3235 inclusive

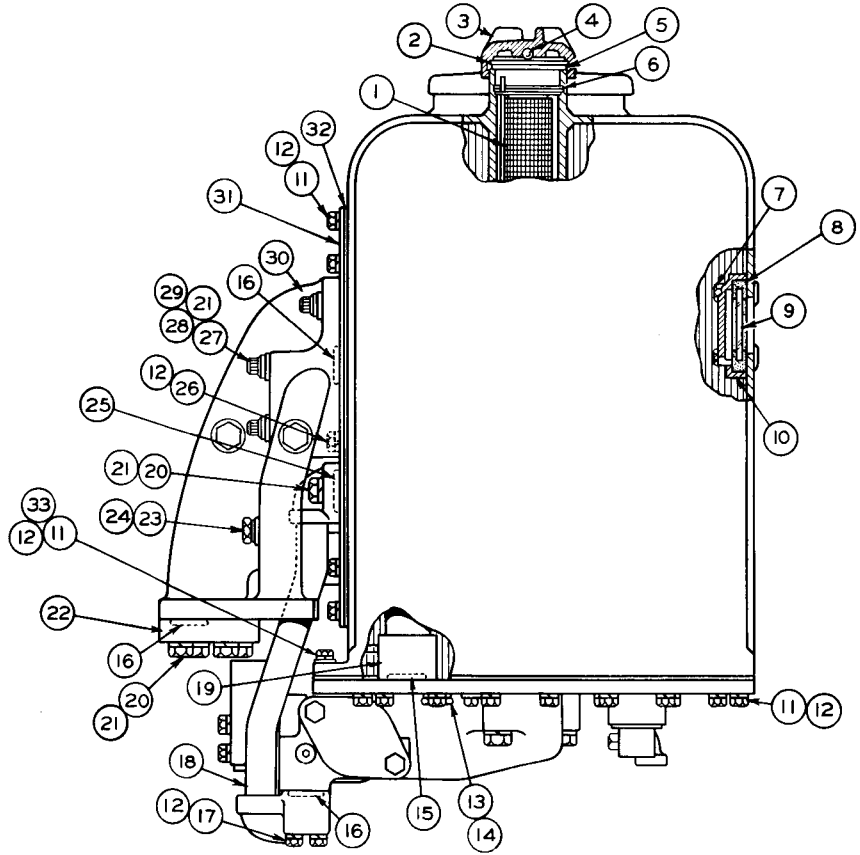

REF NO	PART NUMBER	DESCRIPTION	QTY
1	2J2521	STRAINER ASSEM.	1
2	6H5139	PLATE	1
3	7H1447	CAP	1
4	7B6368	BALL	1
5	9H6454	GASKET	1
6	6H9361	RING	1
7	4J8265	NUT	4
8	4J8251	GROMMET	1
9	4J8252	GLASS	1
10	4J8250	RETAINER	1
11	1A2029	BOLT	68
12	3B4506	LOCKWASHER	73
13	7M5897	PLUG ASSEM.	3
14	2M9780	SEAL (1 in each 7M5897 Plug Assem.)	3
15	8F3469	SEAL	3
16	5J1584	SEAL	6
17	S-1590	BOLT	4
18	5J3480	TUBE ASSEM. -(11, 55" long overall)- (5J3263 Valve to 5J3065 Cover Assem.)	1
19	5J2953	TUBE ASSEM. -(16, 65" long overall)-	1
20	S-1585	BOLT	6
21	3B4508	LOCKWASHER	12
22	5J3545	COVER	1
23	5M7908	PLUG ASSEM.	1
24	3J1907	SEAL (Part of 5M7908 Plug Assem.)	1
25	5J1356	SEAL	1
26	L-1351	BOLT	1
27	5J5793	BOLT---(2" Long)---	1
28	5J5794	BOLT---(3.5" Long)---	2
29	4K5175	BOLT---(1.5" Long)---	3
30	5J9930	MANIFOLD	1
31	5J3065	COVER ASSEM.	1
32	5J3140	GASKET	1
33	4B4278	WASHER	8

121039

ONLY "CATERPILLAR" PARTS GIVE "CATERPILLAR" PERFORMANCE

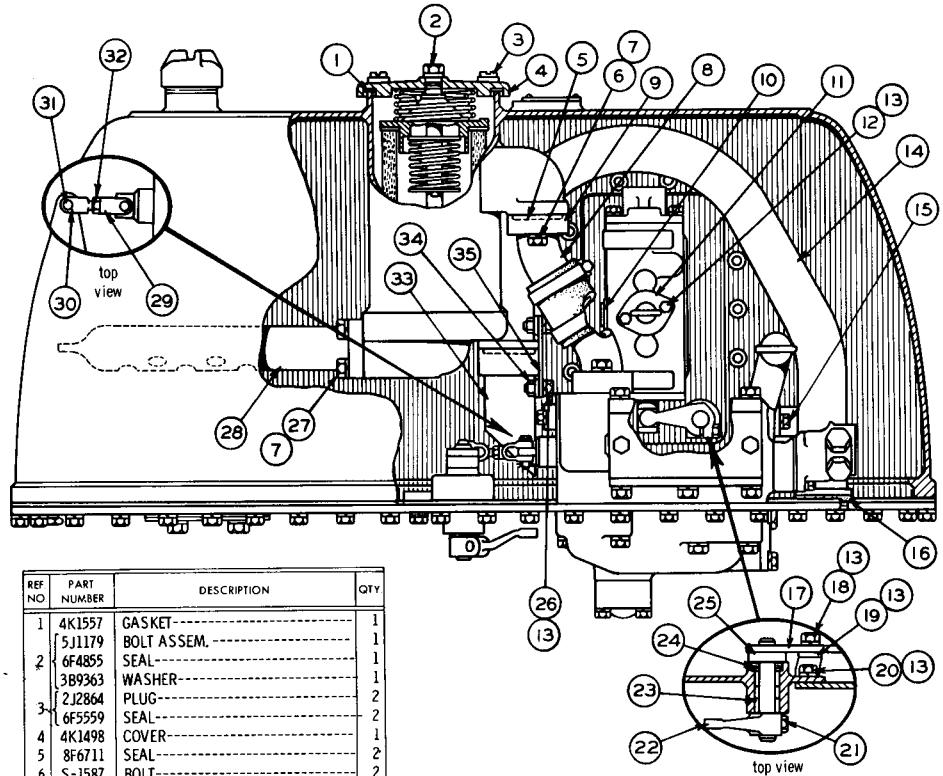

REF NO	PART NUMBER	DESCRIPTION	QTY
1	4K1557	GASKET	1
2	5J1179	BOLT ASSEM.	1
	6F4855	SEAL	1
	3B9363	WASHER	1
3	2J2864	PLUG	2
	6F5559	SEAL	2
4	4K1498	COVER	1
5	8F6711	SEAL	2
6	S-1587	BOLT	2
7	3B4508	LOCKWASHER	6
8	5J3258	TUBE ASSEM.	1
9	5J3250	FLANGE (Part of 5J3258 Tube Assem.)	1
10	3J2493	PLUG ASSEM.	1
	3K360	SEAL (Part of 3J2493 Plug Assem.)	1
11	5J2910	TUBE ASSEM.	1
12	S-1591	BOLT	2
13	3B4506	LOCKWASHER	7
14	5J9749	TUBE ASSEM.	1
15	T-772	BOLT	1
	1K4703	WASHER	1
16	3H2652	SEAL	1
17	5J3541	LEVER ASSEM.	1
18	S-509	BOLT	1
19	5J9123	STRAP	1
	S-1588	BOLT	1
20	L-1351	BOLT	1
21	1A2209	BOLT	1
22	3J7582	LEVER	1
	1B8707	KEY	1
23	7F7983	BEARING	2
24	3J4407	SEAL	1
25	7M2360	WASHER	1
26	S-1594	BOLT	2
27	S-1585	BOLT	4
28	5J2886	TUBE ASSEM.	1
29	4J8922	END	1
30	1J8490	ROD	1
31	1J4384	PIN	2
	3B4615	COTTER PIN	2
	7H3912	BUSHING	1
32	5B9079	NUT	1
33	5J9750	TUBE ASSEM.	1
34	9F2978	NUT (1 in 5J9750 & 5J9749 Tube Assem.)	2
35	5J9746	BRACKET	1

121040

5J3693 TANK AND VALVE GROUP—As Viewed from Right Hand Side of Tractor—Part 2 of 3
183 & 193 Hydraulic Controls Serial No. 27H854 to 27H3235 inclusive

5J3693 TANK AND VALVE GROUP—As Viewed from Right Side of Tractor—Part 3 of 3

183 & 193 Hydraulic Controls Serial No. 27H854 to 27H3235 inclusive

5J3263, 5J3039 & 5J3067 Valve parts are shown on Pages 15, 16 & 16B

REF NO	PART NUMBER	DESCRIPTION	QTY
1	4J6064	ELEMENT ASSEM.	1
2	5J1283	SPRING	1
3	5J1473	SEAT ASSEM.	1
4	2J918	VALVE	1
5	3F566	WASHER	1
6	2J8455	SPRING (Inner)	1
7	2J6114	SPRING (Outer)	1

REF NO	PART NUMBER	DESCRIPTION	QTY
8	4B4158	SCREW	2
9	2M6831	PLATE-----(Serial Number)	1
10	2J6540	CLAMP	2
11	4J7313	HOSE--------(3.38" Long)	1
12	5J3229	TUBE ASSEM.	1
13	1H9689	FLANGE	1
		(Part of 5J3229 Tube Assem.)	

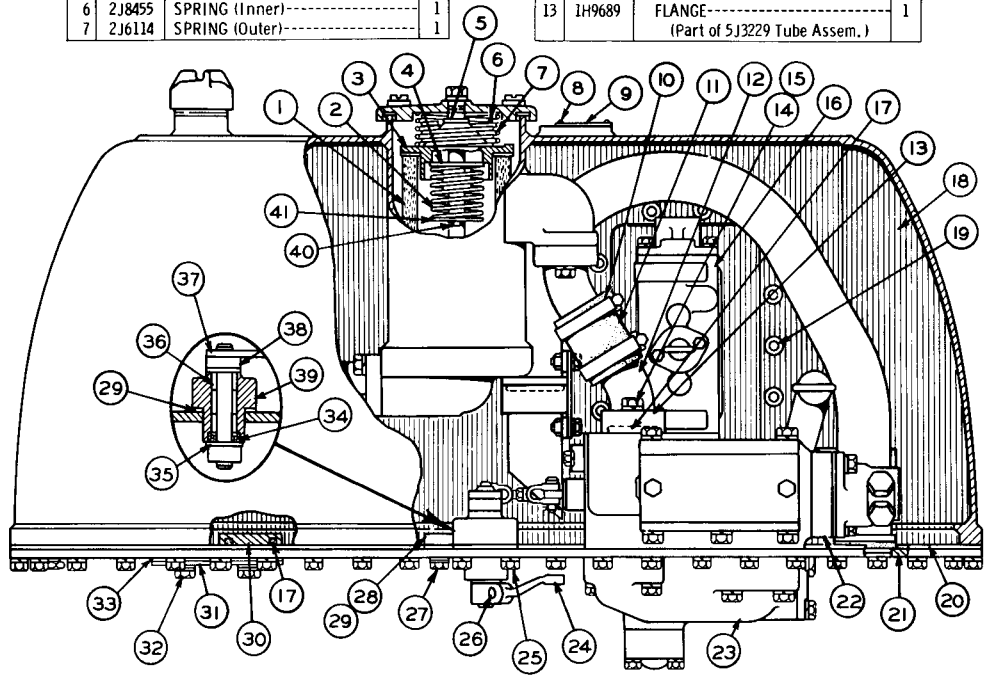

REF NO	PART NUMBER	DESCRIPTION	QTY
14	S-1587	BOLT	2
15	3B4508	LOCKWASHER	2
16	5J3067	CONTROL VALVE GROUP (See Separate Illustration)	1
17	1H9696	SEAL	3
18	5J2862	TANK ASSEM.	1
	5J96	STUD	4
19	6J2237	BOSS (Parts of 5J2862 Tank Assem.)	18
20	5J3112	GASKET	1
21	5J3090	PLATE	1
22	5J3039	CONTROL VALVE GROUP (See Separate Illustration)	1
23	5J3263	RELIEF VALVE GROUP (See Separate Illustration)	1
24	5J3200	LEVER	1
	1B8706	KEY	1
25	1A2029	BOLT	4
	3B4506	LOCKWASHER	4
26	S-1588	BOLT	1
27	S-1594	BOLT	4
	5L5840	WASHER------- (▬) -------	4
	5B9628	WASHER------- (▬) -------	4
28	3J9306	COVER	1
29	4J8425	GASKET	2
30	3J9298	COVER	2
31	3J9297	COVER	2
32	S-1595	BOLT	4
	1K4703	WASHER------- (▬) -------	4
	5L5180	WASHER------- (▬) -------	4
33	2J7606	GASKET	2
34	3J4407	SEAL	1
35	8B4037	WASHER	1
36	7F7983	BEARING	2
37	5J3117	LEVER ASSEM.	1
38	2H5746	ADAPTER	1
39	5J880	HOUSING	1
40	3B5301	COTTER PIN	1
41	2J917	RETAINER	1

121041

ONLY "CATERPILLAR" PARTS GIVE "CATERPILLAR" PERFORMANCE

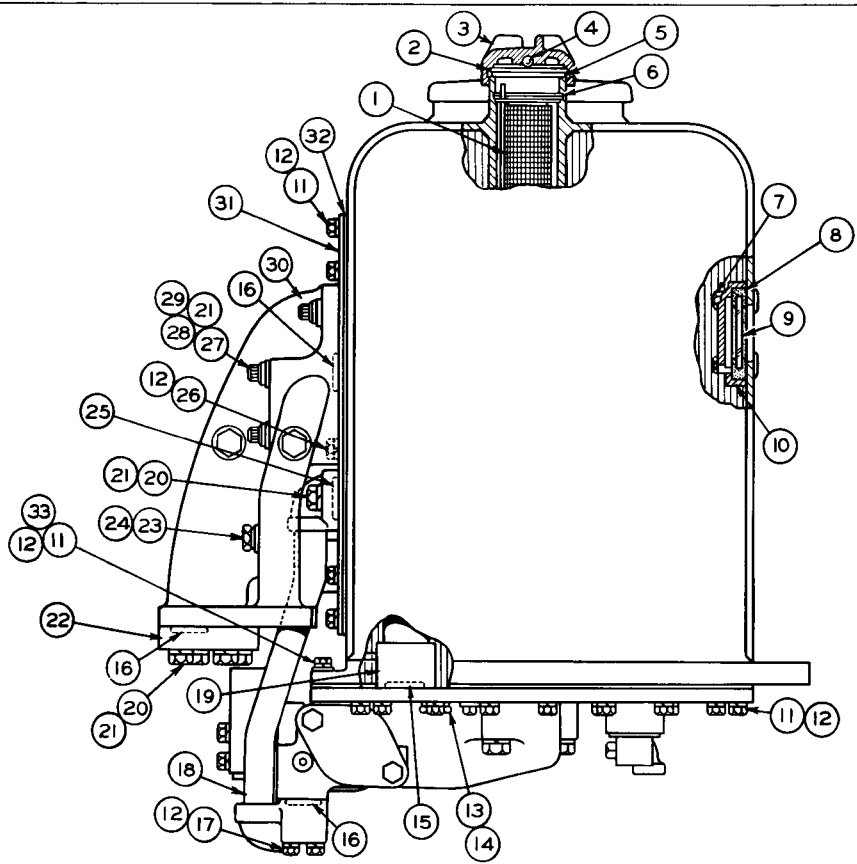

REF NO.	PART NUMBER	DESCRIPTION	QTY
1	2J2521	STRAINER ASSEM.	1
2	6H5139	PLATE	1
3	7H1447	CAP	1
4	7B6368	BALL	1
5	9H6454	GASKET	1
6	6H9361	RING	1
7	4J8265	NUT	4
8	4J8251	GROMMET	1
9	4J8252	GLASS	1
10	4J8250	RETAINER	1
11	1A2029	BOLT	68
12	3B4506	LOCKWASHER	73
13	7M5897	PLUG ASSEM.	3
14	2M9780	SEAL (1 in each 7M5897 Plug Assem.)	3
15	8F3469	SEAL	2
16	5J1584	SEAL	6
17	S-1590	BOLT	4
18	5J3480	TUBE ASSEM. -(11.55" long overall)- (5J3263 Valve to 6J1029 Cover Assem.)	1
19	6J1942	TUBE ASSEM. -(16.65" long overall)-	1
20	S-1585	BOLT	6
21	3B4508	LOCKWASHER	12
22	5J3545	COVER	1
23	5M7908	PLUG ASSEM.	1
24	3J1907	SEAL (Part of 5M7908 Plug Assem.)	1
25	5J1356	SEAL	1
26	L-1351	BOLT	1
27	5J5793	BOLT----------(2" Long)----------	1
28	5J5794	BOLT----------(3.5" Long)----------	2
29	4K5175	BOLT----------(1.5" Long)----------	3
30	5J9930	MANIFOLD	1
31	6J1029	COVER ASSEM.	1
32	5J3140	GASKET	1
33	4B4278	WASHER	8

120809

5J3693 TANK AND VALVE GROUP—As Viewed from Rear of Tractor—Part 1 of 3
183 & 193 Hydraulic Controls Serial No. 27H3236 to 27H3999 inclusive
8S9784 Complete Gasket Kit is available

5J3693 TANK AND VALVE GROUP—As Viewed from Right Hand Side of Tractor—Part 2 of 3
183 & 193 Hydraulic Controls Serial No. 27H3236 to 27H3999 inclusive

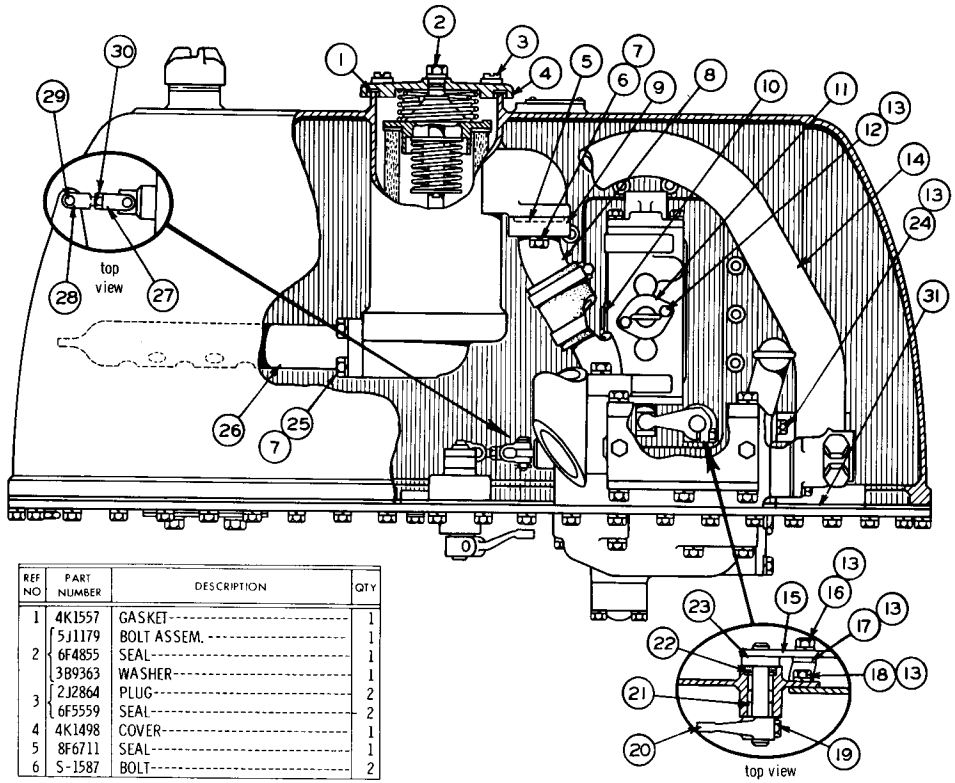

REF NO	PART NUMBER	DESCRIPTION	QTY
1	4K1557	GASKET	1
2	5J1179	BOLT ASSEM.	1
	6F4855	SEAL	1
	3B9363	WASHER	1
3	2J2864	PLUG	2
	6F5559	SEAL	2
4	4K1498	COVER	1
5	8F6711	SEAL	1
6	S-1587	BOLT	2

REF NO	PART NUMBER	DESCRIPTION	QTY
7	3B4508	LOCKWASHER	6
8	5J3258	TUBE ASSEM.	1
9	5J3250	FLANGE (Part of 5J3258 Tube Assem.)	1
10	3J2493	PLUG ASSEM.	1
	3K360	SEAL (Part of 3J2493 Plug Assem.)	1
11	5J2910	TUBE ASSEM.	1
12	S-1591	BOLT	2
13	3B4506	LOCKWASHER	7
14	6J1991	TUBE ASSEM.	1
15	5J3541	LEVER ASSEM.	1
16	S-509	BOLT	1
17	6J1996	STRAP	1
	S-1588	BOLT	1
18	L-1351	BOLT	1
19	1A2209	BOLT	1
20	3J7582	LEVER	1
	1B8707	KEY	1
21	7F7983	BEARING	2
22	3J4407	SEAL	1
23	7M2360	WASHER	1
24	S-1594	BOLT	1
25	S-1585	BOLT	4
26	5J2886	TUBE ASSEM.	1
27	4J8922	END	1
28	1J8490	ROD	1
29	1J4384	PIN	2
	3B4615	COTTER PIN	2
	7H3912	BUSHING	1
30	5B9079	NUT	1
31	3R2425	GASKET	1

120810

ONLY "CATERPILLAR" PARTS GIVE "CATERPILLAR" PERFORMANCE

REF. NO.	PART NUMBER	DESCRIPTION	QTY.
1	4J6064	ELEMENT ASSEM.	1
2	5J1283	SPRING	1
3	5J1473	SEAT ASSEM.	1
4	2J918	VALVE	1
5	3F566	WASHER	1
6	2J8455	SPRING (Inner)	1
7	2J6114	SPRING (Outer)	1

REF. NO.	PART NUMBER	DESCRIPTION	QTY.
8	4B4158	SCREW	2
9	2M6831	PLATE-----(Serial Number)-----	1
10	2J6540	CLAMP	2
11	4J7313	HOSE--------(3.38" Long)--------	1
12	5J3229	TUBE ASSEM.	1
13	1H9689	FLANGE (Part of 5J3229 Tube Assem.)	1

REF. NO.	PART NUMBER	DESCRIPTION	QTY.
14	S-1587	BOLT	2
15	3B4508	LOCKWASHER	2
16	5J3067	CONTROL VALVE GROUP (See Separate Illustration)	1
17	1H9696	SEAL	3
18	6J1055	TANK ASSEM.	1
	5J96	STUD	4
	2J2411	BLOCK	1
	6J2237	BOSS	18
		(Parts of 6J1055 Tank Assem.)	
20	6J1053	GASKET	1
21	6J1054	PLATE	1
22	5J3039	CONTROL VALVE GROUP (See Separate Illustration)	1
23	5J3263	RELIEF VALVE GROUP (See Separate Illustration)	1
24	5J3200	LEVER	1
	1B8706	KEY	1
25	1A2029	BOLT	4
	3B4506	LOCKWASHER	4
26	S-1588	BOLT	1
27	S-1594	BOLT	4
	5L5840	WASHER--------(▬)--------	4
	5B9628	WASHER--------(▬)--------	4
28	3J9306	COVER	1
29	4J8425	GASKET	1
30	3J9298	COVER	2
31	3J9297	COVER	2
32	S-1595	BOLT	4
	1K4703	WASHER--------(▬)--------	4
	5L5180	WASHER--------(▬)--------	4
33	2J7606	GASKET	2
34	3J4407	SEAL	1
35	8B4037	WASHER	1
36	7F7983	BEARING	2
37	5J3117	LEVER ASSEM.	1
38	2H5746	ADAPTER	1
39	5J880	HOUSING	1
40	3B5301	COTTER PIN	1
41	2J917	RETAINER	1

120811

5J3693 TANK AND VALVE GROUP—As Viewed from Right Hand Side of Tractor—Part 3 of 3
183 & 193 Hydraulic Controls Serial No. 27H3236 to 27H3999 inclusive
5J3263, 5J3039 & 5J3067 Valve parts are shown on Pages 15, 16 & 16B

5J3693 TANK AND VALVE GROUP—As Viewed from Rear of Tractor—Part 1 of 3
183 & 193 Hydraulic Controls Serial No. 27H4000 to 27H5580 inclusive
8S9784 Complete Gasket Kit is available

C INDICATES CHANGE FROM PREVIOUS TYPE

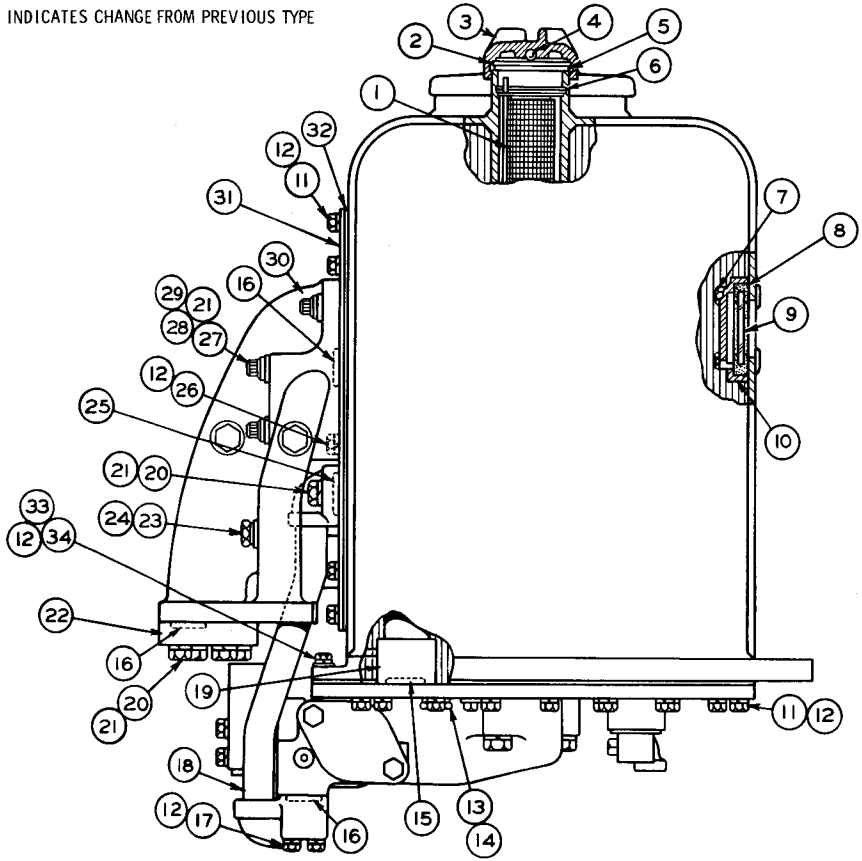

123213 C

REF. NO.	PART NUMBER	DESCRIPTION	QTY.
1	2J2521	STRAINER ASSEM.	1
2	6H5139	PLATE	1
3	7H1447	CAP	1
4	7B6368	BALL	1
5	9H6454	GASKET	1
6	6H9361	RING	1
7	4J8265	NUT	4
8	4J8251	GROMMET	1
9	4J8252	GLASS	1
10	4J8250	RETAINER	1
11	1A2029	BOLT	60
12	3B4506	LOCKWASHER	73
13	7M5897	PLUG ASSEM.	3
14	2M9780	SEAL (1 in each 7M5897 Plug Assem.)	3
15	8F3469	SEAL	2
16	5J1584	SEAL	6
17	S 1590	BOLT	4
18	5J3480	TUBE ASSEM. -(11.55" long overall)- (5J3263 Valve to 6J1029 Cover Assem.)	1
19	6J1942	TUBE ASSEM. -(16.65" long overall)-	1
20	S 1585	BOLT	6
21	3B4508	LOCKWASHER	12
22	5J3545	COVER	1
23	5M7908	PLUG ASSEM.	1
24	3J1907	SEAL (Part of 5M7908 Plug Assem.)	1
25	5J1356	SEAL	1
26	L 1351	BOLT	1
27	5J5793	BOLT—(2" Long)	1
28	5J5794	BOLT—(3.5" Long)	2
29	4K5175	BOLT—(1.5" Long)	3
30	5J9930	MANIFOLD	1
31	6J1029	COVER ASSEM.	1
32	5J3140	GASKET	1
33	4B4278	WASHER	8
34	S 1588	BOLT	8

ONLY "CATERPILLAR" PARTS GIVE "CATERPILLAR" PERFORMANCE

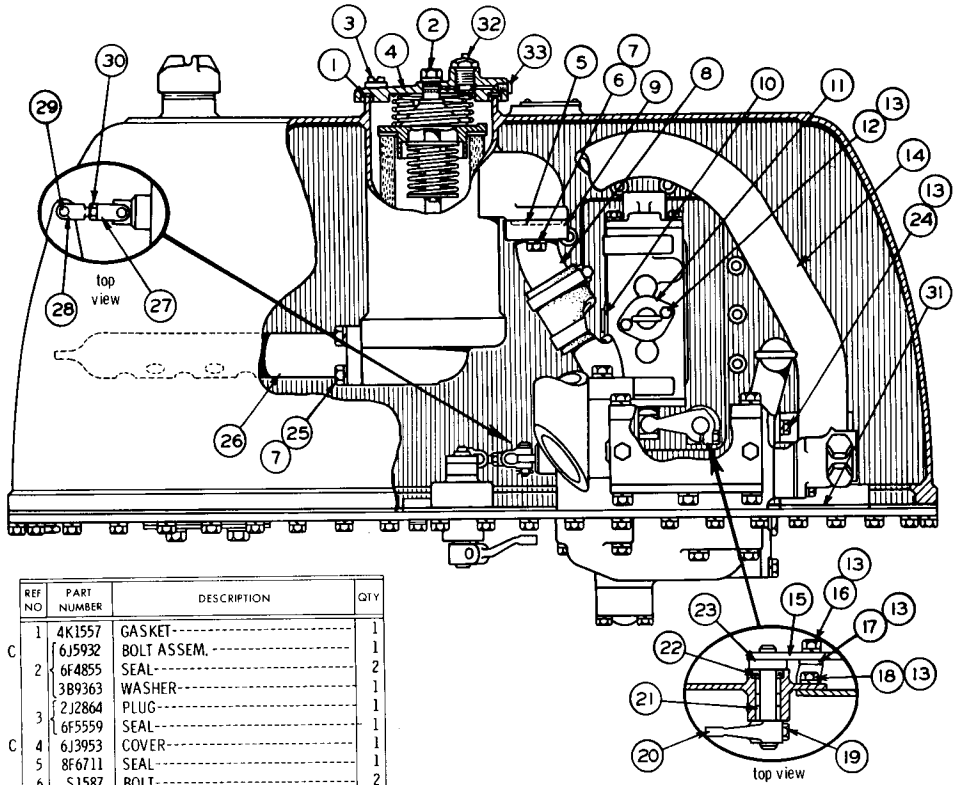

REF NO	PART NUMBER	DESCRIPTION	QTY
1	4K1557	GASKET	1
C	6J5932	BOLT ASSEM.	1
2	6F4855	SEAL	2
	3B9363	WASHER	1
3	2J2864	PLUG	1
	6F5559	SEAL	1
C 4	6J3953	COVER	1
5	8F6711	SEAL	1
6	S1587	BOLT	2

REF. NO.	PART NUMBER	DESCRIPTION	QTY
7	3B4508	LOCKWASHER	6
8	5J3258	TUBE ASSEM.	1
9	5J3250	FLANGE (Part of 5J3258 Tube Assem.)	1
10	3J2493	PLUG ASSEM.	1
	3K360	SEAL (Part of 3J2493 Plug Assem.)	1
11	5J2910	TUBE ASSEM.	1
12	S1591	BOLT	2
13	3B4506	LOCKWASHER	7
14	6J1991	TUBE ASSEM.	1
15	5J3541	LEVER ASSEM.	1
16	S509	BOLT	1
17	6J1996	STRAP	1
	S1588	BOLT	1
18	L1351	BOLT	1
19	1A2209	BOLT	1
20	3J7582	LEVER	1
	1B8707	KEY	1
21	7F7983	BEARING	2
22	3J4407	SEAL	1
23	7M2360	WASHER	1
24	S1594	BOLT	1
25	S1585	BOLT	4
26	5J2886	TUBE ASSEM.	1
27	4J8922	END	1
28	1J8490	ROD	1
29	1J4384	PIN	2
	3B4615	COTTER PIN	2
	7H3912	BUSHING	1
30	5B9079	NUT	1
31	3R2425	GASKET	1
C 32	6J468	INDICATOR ASSEM.	1
	2M9780	SEAL (Part of 6J468 Indicator Assem.)	1
C 33	5J9286	PLUG ASSEM.	1
	4J7533	SEAL (Part of 5J9286 Plug Assem.)	1

C INDICATES CHANGE FROM PREVIOUS TYPE

123214

5J3693 TANK AND VALVE GROUP—As Viewed from Right Hand Side of Tractor—Part 2 of 3
183 & 193 Hydraulic Controls Serial No. 27H4000 to 27H5580 inclusive

5J3693 TANK AND VALVE GROUP—As Viewed from Right Hand Side of Tractor—Part 3 of 3
183 & 193 Hydraulic Controls Serial No. 27H4000 to 27H5580 inclusive
5J3263, 5J3039, 5J3067 & 7J2026 Valve parts are shown on Pages 15, 16, 16A, 16B & 17

REF NO	PART NUMBER	DESCRIPTION	QTY
1	4J6064	ELEMENT ASSEM.	1
2	5J1283	SPRING	1
3	5J1473	SEAT ASSEM.	1
4	2J918	VALVE	1
5	3F566	WASHER	1
6	2J8455	SPRING (Inner)	1
7	2J6114	SPRING (Outer)	1

REF NO.	PART NUMBER	DESCRIPTION	QTY
8	4B4158	SCREW	2
9	2M6831	PLATE (Serial Number)	1
10	2J6540	CLAMP	2
11	4J7313	HOSE (3, 38" Long)	1
12	5J3229	TUBE ASSEM.	1
13	1H9689	FLANGE	1
		(Part of 5J3229 Tube Assem.)	

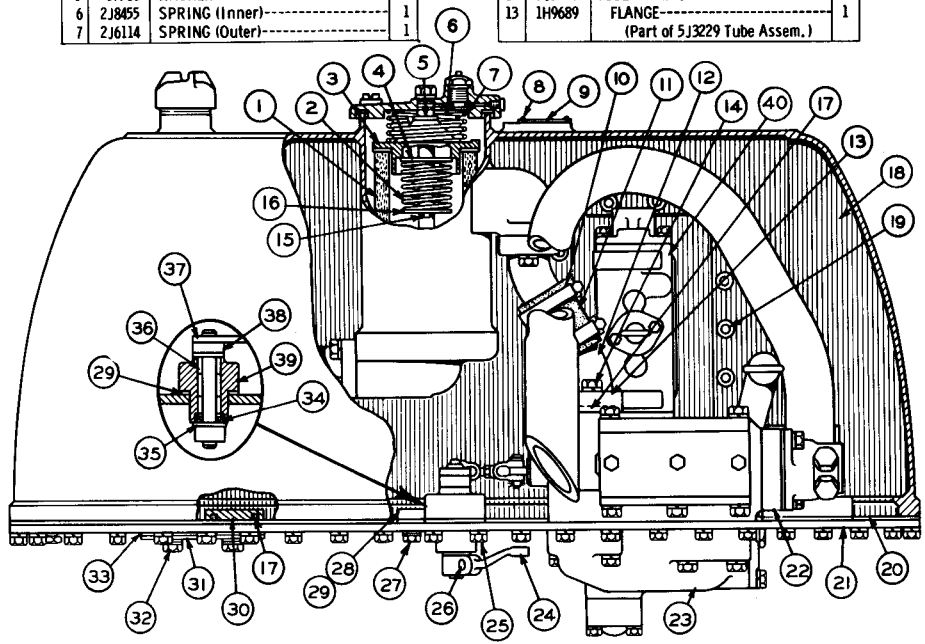

C INDICATES CHANGE FROM PREVIOUS TYPE

127030

REF NO.	PART NUMBER	DESCRIPTION	QTY
14	S 1587	BOLT	2
	3B4508	LOCKWASHER	2
15	1H1200	PIN	1
16	2J917	RETAINER	1
17	1H9696	SEAL	3
	6J1055	TANK ASSEM.	1
18	5J96	STUD	4
	2J2411	BLOCK	1
19	6J2237	BOSS	18
		(Parts of 6J1055 Tank Assem.)	
20	6J1053	GASKET	1
21	6J1054	PLATE	1
22	5J3039	CONTROL VALVE GROUP (See Separate Illustration)	1
23	5J3263	RELIEF VALVE GROUP (See Separate Illustration)	1
24	5J3200	LEVER	1
	1B8706	KEY	1
25	1A2029	BOLT	4
	3B4506	LOCKWASHER	4
26	S 1588	BOLT	1
	S 1594	BOLT	4
27	5L5840	WASHER (—)	4
	5B9628	WASHER (—)	4
28	3J9306	COVER	1
29	4J8425	GASKET	1
30	3J9298	COVER	2
31	3J9297	COVER	2
	S 1595	BOLT	4
32	1K4703	WASHER (—)	4
	5L5180	WASHER (—)	4
33	2J7606	GASKET	2
34	3J4407	SEAL	1
35	8B4037	WASHER	1
36	7F7983	BEARING	2
37	5J3117	LEVER ASSEM.	1
38	2H5746	ADAPTER	1
39	5J880	HOUSING	1
40	5J3067	CONTROL VALVE GROUP	1
		-OR-	
	7J2026	CONTROL VALVE GROUP (See Separate Illustration)	1

C

C INDICATES CHANGE FROM PREVIOUS TYPE

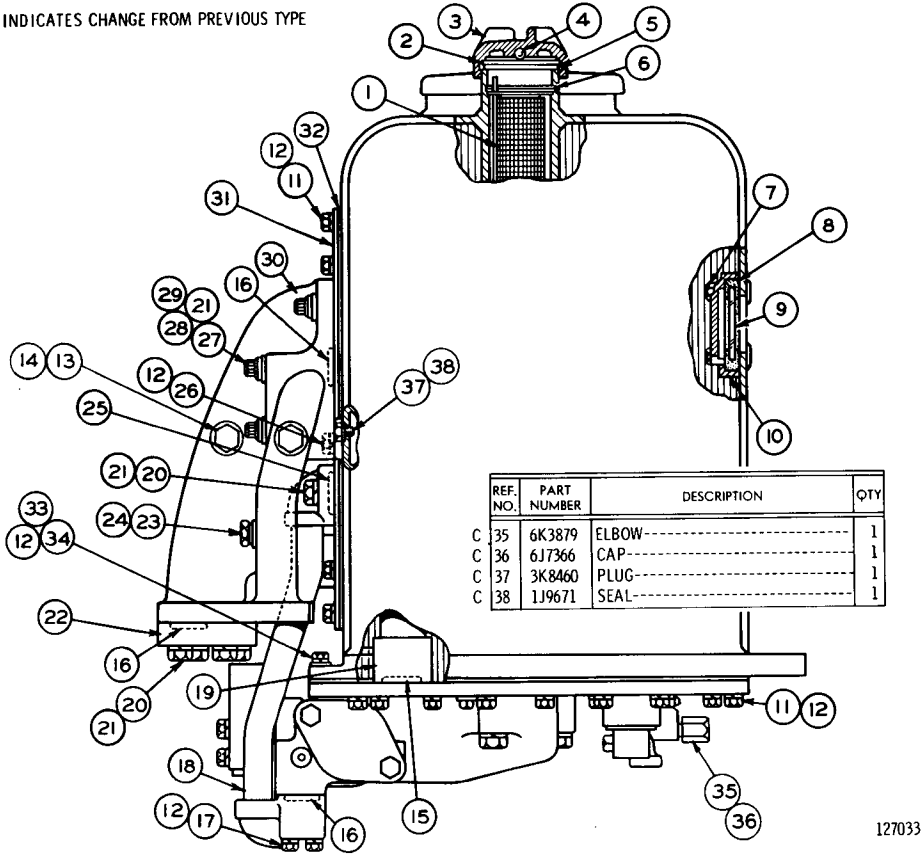

	REF. NO.	PART NUMBER	DESCRIPTION	QTY
C	35	6K3879	ELBOW	1
C	36	6J7366	CAP	1
C	37	3K8460	PLUG	1
C	38	1J9671	SEAL	1

REF. NO.	PART NUMBER	DESCRIPTION	QTY
1	2J2521	STRAINER ASSEM.	1
2	6H5139	PLATE	1
3	7H1447	CAP	1
4	7B6368	BALL	1
5	9H6454	GASKET	1
6	6H9361	RING	1
7	4J8265	NUT	4
8	4J8251	GROMMET	1
9	4J8252	GLASS	1
10	4J8250	RETAINER	1
11	1A2029	BOLT	60
12	3B4506	LOCKWASHER	73
13	7M5897	PLUG ASSEM.	2
14	2M9780	SEAL (1 in each 7M5897 Plug Assem.)	2
15	8F3469	SEAL	2
16	5J1584	SEAL	6
17	S 1590	BOLT	4
18	5J3480	TUBE ASSEM. -(11.55" long overall)- (5J3263 Valve to 6J1029 Cover Assem.)	1
19	6J1942	TUBE ASSEM. -(16.65" long overall)-	1
20	S 1585	BOLT	6
21	3B4508	LOCKWASHER	12
22	5J3545	COVER	1
23	5M7908	PLUG ASSEM.	1
24	3J1907	SEAL (Part of 5M7908 Plug Assem.)	1
25	5J1356	SEAL	1
26	L 1351	BOLT	1
27	5J5793	BOLT---(2" Long)	1
28	5J5794	BOLT---(3.5" Long)	2
29	4K5175	BOLT---(1.5" Long)	3
30	5J9930	MANIFOLD	1
31	6J1029	COVER ASSEM.	1
32	5J3140	GASKET	1
33	4B4278	WASHER	8
34	S 1588	BOLT	8

5J3693 TANK AND VALVE GROUP—Rear View—Part 1 of 3
183 & 193 Hydraulic Controls Serial No. 27H5581 to 27H5690 inclusive
8S9784 Complete Gasket Kit is available

5J3693 TANK AND VALVE GROUP—Right Hand Side View—Part 2 of 3
183 & 193 Hydraulic Control Serial No. 27H5581 to 27H5690 inclusive

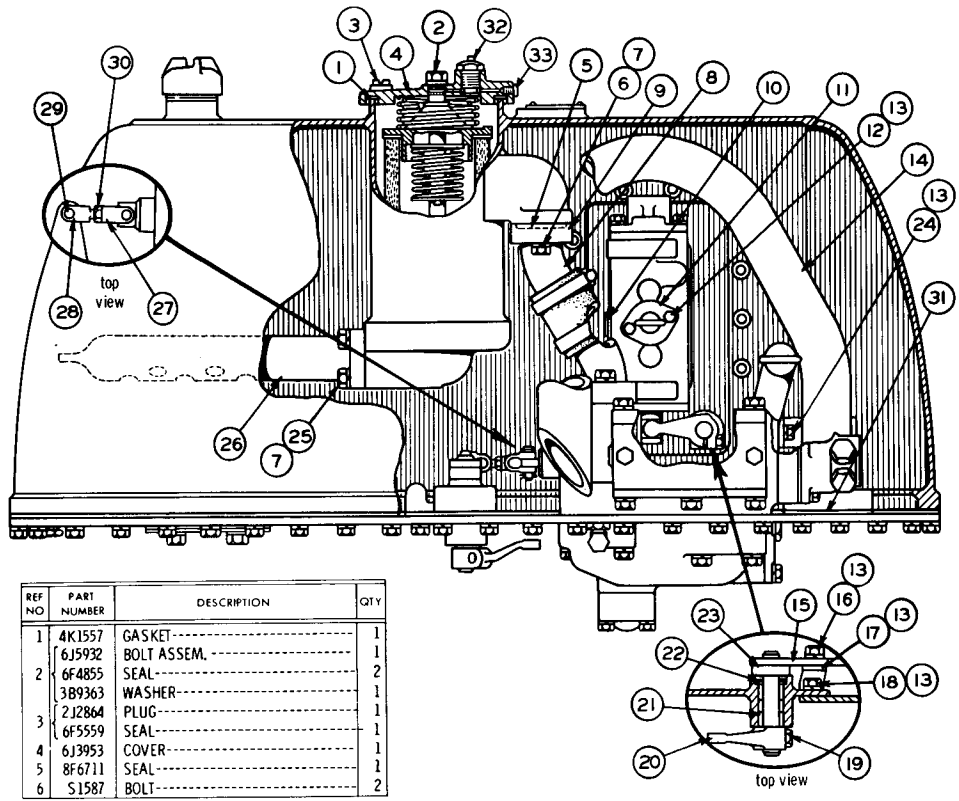

REF NO	PART NUMBER	DESCRIPTION	QTY
1	4K1557	GASKET	1
2	6J5932	BOLT ASSEM.	1
	6F4855	SEAL	2
	3B9363	WASHER	1
3	2J2864	PLUG	1
	6F5559	SEAL	1
4	6J3953	COVER	1
5	8F6711	SEAL	1
6	S1587	BOLT	2

REF. NO.	PART NUMBER	DESCRIPTION	QTY
7	3B4508	LOCKWASHER	6
8	5J3258	TUBE ASSEM.	1
9	5J3250	FLANGE (Part of 5J3258 Tube Assem.)	1
10	3J2493	PLUG ASSEM.	1
	3K360	SEAL (Part of 3J2493 Plug Assem.)	1
11	5J2910	TUBE ASSEM.	1
12	S1591	BOLT	2
13	3B4506	LOCKWASHER	7
14	6J1991	TUBE ASSEM.	1
15	5J3541	LEVER ASSEM.	1
16	S509	BOLT	1
17	6J1996	STRAP	1
	S1588	BOLT	1
18	L1351	BOLT	1
19	1A2209	BOLT	1
20	3J7582	LEVER	1
	1B8707	KEY	1
21	7F7983	BEARING	2
22	3J4407	SEAL	1
23	7M2360	WASHER	1
24	S1594	BOLT	1
25	S1585	BOLT	4
26	5J2886	TUBE ASSEM.	1
27	4J8922	END	1
28	1J8490	ROD	1
29	1J4384	PIN	2
	3B4615	COTTER PIN	2
	7H3912	BUSHING	1
30	5B9079	NUT	1
31	3R2425	GASKET	1
32	6J468	INDICATOR ASSEM.	1
	2M9780	SEAL (Part of 6J468 Indicator Assem.)	1
33	5J9286	PLUG ASSEM.	1
	4J7533	SEAL (Part of 5J9286 Plug Assem.)	1

127034

ONLY "CATERPILLAR" PARTS GIVE "CATERPILLAR" PERFORMANCE

REF NO	PART NUMBER	DESCRIPTION	QTY
1	4J6064	ELEMENT ASSEM.	1
2	5J1283	SPRING	1
3	5J1473	SEAT ASSEM.	1
4	2J918	VALVE	1
5	3F566	WASHER	1
6	2J8455	SPRING (Inner)	1
7	2J6114	SPRING (Outer)	1

REF NO	PART NUMBER	DESCRIPTION	QTY
8	4B4158	SCREW	2
9	2M6831	PLATE------(Serial Number)	1
10	2J6540	CLAMP	2
11	4J7313	HOSE--------(3.38" Long)	1
12	5J3229	TUBE ASSEM.	1
13	1H9689	FLANGE (Part of 5J3229 Tube Assem.)	1

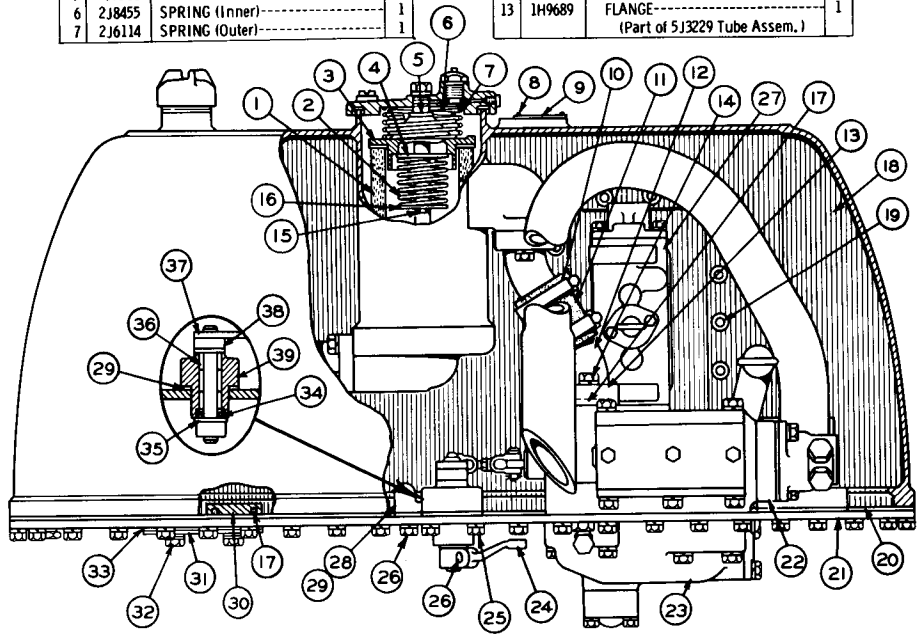

	REF. NO.	PART NUMBER	DESCRIPTION	QTY
	14	S1587	BOLT	2
		3B4508	LOCKWASHER	2
	15	1H1200	PIN	1
	16	2J917	RETAINER	1
	17	1H9696	SEAL	3
	18	6J1055	TANK ASSEM.	1
		5J96	STUD	4
		2J2411	BLOCK	1
	19	6J2237	BOSS (Parts of 6J1055 Assem.)	18
	20	6J1053	GASKET	1
	21	6J1054	PLATE	1
	22	5J3039	CONTROL VALVE GROUP (See Separate Illustration)	1
	23	5J3263	RELIEF VALVE GROUP (See Separate Illustration)	1
	24	5J3200	LEVER	1
		1B8706	KEY	1
	25	1A2029	BOLT	4
C		3B4506	LOCKWASHER	8
	26	S1588	BOLT	6
C	27	7J2026	CONTROL VALVE GROUP (See Separate Illustration)	1
C	28	7J2852	COVER	1
	29	4J8425	GASKET	1
	30	3J9298	COVER	2
	31	3J9297	COVER	2
	32	S1595	BOLT	4
		1K4703	WASHER ( )	4
		5K5180	WASHER ( )	4
	33	2J7606	GASKET	2
	34	3J4407	SEAL	1
	35	8B4037	WASHER	1
	36	7F7983	BEARING	2
	37	5J3117	LEVER ASSEM.	1
	38	2H5746	ADAPTER	1
	39	5J880	HOUSING	1

C INDICATES CHANGE FROM PREVIOUS TYPE

127035

5J3693 TANK AND VALVE GROUP—Right Hand Side View—Part 3 of 3
183 & 193 Hydraulic Controls Serial No. 27H5581 to 27H5690 inclusive
5J3263, 5J3039 & 7J2026 Valve parts are shown on Pages 15, 16A & 17

5J3693 TANK AND VALVE GROUP—Rear View—Part 1 of 3

183 & 193 Hydraulic Controls Serial No. 27H5691 to 27H5801 inclusive

8S9784 Complete Gasket Kit is available

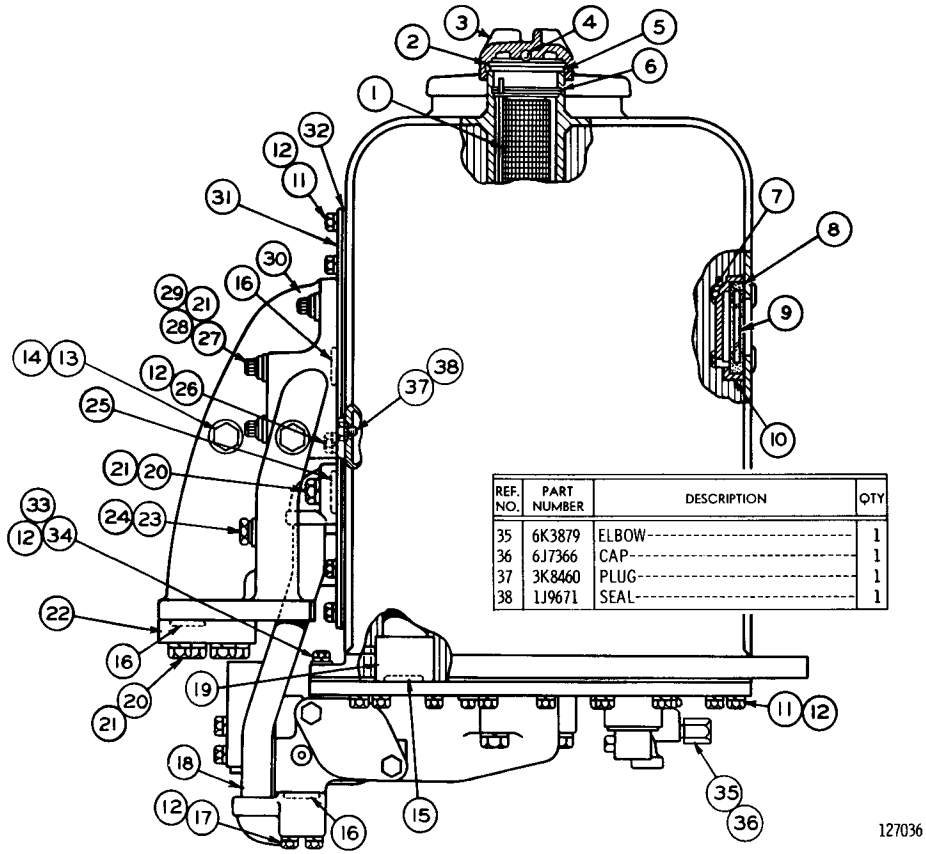

REF. NO.	PART NUMBER	DESCRIPTION	QTY
35	6K3879	ELBOW	1
36	6J7366	CAP	1
37	3K8460	PLUG	1
38	1J9671	SEAL	1

REF. NO.	PART NUMBER	DESCRIPTION	QTY
1	2J2521	STRAINER ASSEM.	1
2	6H5139	PLATE	1
3	7H1447	CAP	1
4	7B6368	BALL	1
5	9H6454	GASKET	1
6	6H9361	RING	1
7	4J8265	NUT	4
8	4J8251	GROMMET	1
9	4J8252	GLASS	1
10	4J8250	RETAINER	1
11	1A2029	BOLT	60
12	3B4506	LOCKWASHER	73
13	7M5897	PLUG ASSEM.	2
14	2M9780	SEAL (1 in each 7M5897 Plug Assem.)	2
15	8F3469	SEAL	2
16	5J1584	SEAL	6
17	S 1590	BOLT	4
18	5J3480	TUBE ASSEM. -(11.55" long overall)- (5J3263 Valve to 6J1029 Cover Assem.)	1
19	6J1942	TUBE ASSEM. -(16.65" long overall)-	1
20	S 1585	BOLT	6
21	3B4508	LOCKWASHER	12
22	5J3545	COVER	1
23	5M7908	PLUG ASSEM.	1
24	3J1907	SEAL (Part of 5M7908 Plug Assem.)	1
25	5J1356	SEAL	1
26	L 1351	BOLT	1
27	5J5793	BOLT---(2" Long)---	1
28	5J5794	BOLT---(3.5" Long)---	2
29	4K5175	BOLT---(1.5" Long)---	3
30	5J9930	MANIFOLD	1
31	6J1029	COVER ASSEM.	1
32	5J3140	GASKET	1
33	4B4278	WASHER	8
34	S 1588	BOLT	8

ONLY "CATERPILLAR" PARTS GIVE "CATERPILLAR" PERFORMANCE

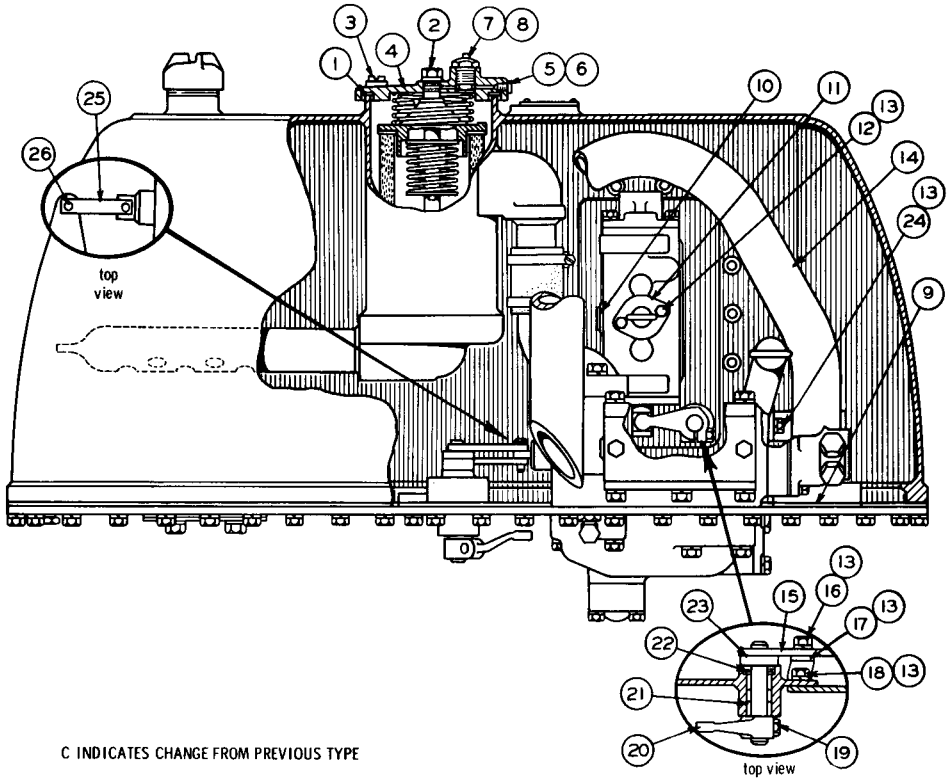

REF. NO.	PART NUMBER	DESCRIPTION	QTY
1	4K1557	GASKET	1
	6J5932	BOLT ASSEM.	1
2	6F4855	SEAL	2
	3B9363	WASHER	1
3	2J2864	PLUG	1
	6F5559	SEAL	1
4	6J3953	COVER	1
5	5J9286	PLUG ASSEM.	1
6	4J7533	SEAL (Part of 5J9286 Assem.)	1
7	6J468	INDICATOR ASSEM.	1
8	2M9780	SEAL (Part of 6J468 Assem.)	1
9	3R2425	GASKET	1
10	3J2493	PLUG ASSEM.	1
	3K360	SEAL (Part of 3J2493 Assem.)	1
11	5J2910	TUBE ASSEM.	1
12	S1591	BOLT	2
13	3B4506	LOCKWASHER	7
14	6J1991	TUBE ASSEM.	1
15	5J3541	LEVER ASSEM.	1
16	S509	BOLT	1
17	6J1996	STRAP	1
	S1588	BOLT	1
18	L1351	BOLT	1
19	1A2209	BOLT	1
20	3J7582	LEVER	1
	1B8707	KEY	1
21	7F7983	BEARING	2
22	3J4407	SEAL	1
23	7M2360	WASHER	1
24	S1594	BOLT	1
C 25	7J2378	LINK	2
C	5F9199	PIN	2
C 26	8S7803	RETAINER	2
	7H3912	BUSHING	1

127037

5J3693 TANK AND VALVE GROUP—Right Hand Side View—Part 2 of 3
183 & 193 Hydraulic Controls Serial No. 27H5691 to 27H5801 inclusive

5J3693 TANK AND VALVE GROUP—Right Hand Side View—Part 3 of 3
183 & 193 Hydraulic Controls Serial No. 27H5691 to 27H5801 inclusive
5J3263, 5J3039 & 7J2026 Valve parts are shown on Pages 15, 16A & 17

REF NO	PART NUMBER	DESCRIPTION	QTY
1	4J6064	ELEMENT ASSEM.	1
2	5J1283	SPRING	1
3	5J1473	SEAT ASSEM.	1
4	2J918	VALVE	1
5	3F566	WASHER	1
6	2J8455	SPRING (Inner)	1
7	2J6114	SPRING (Outer)	1

REF. NO.	PART NUMBER	DESCRIPTION	QTY
8	4B4158	SCREW	2
9	2M6831	PLATE-----(Serial Number)	1
10	2J6540	CLAMP	2
11	4J7313	HOSE-------(3.38" long)	1
C 12	7J2441	ELBOW	1

REF. NO.	PART NUMBER	DESCRIPTION	QTY
13	S1587	BOLT	2
14	3B4508	LOCKWASHER	2
15	1H1200	PIN	1
16	2J917	RETAINER	1
17	1H9696	SEAL	3
C	7J2772	TANK ASSEM.	1
18	5J96	STUD	4
	2J2411	BLOCK	1
19	6J2237	BOSS (Parts of 7J2772 Assem.)	18
20	6J1053	GASKET	1
21	6J1054	PLATE	1
22	5J3039	CONTROL VALVE GROUP (See Separate Illustration)	1
23	5J3263	RELIEF VALVE GROUP (See Separate Illustration)	1
24	5J3200	LEVER	1
	1B8706	KEY	1
25	1A2029	BOLT	4
	3B4506	LOCKWASHER	8
26	S1588	BOLT	6
27	7J2026	CONTROL VALVE GROUP (See Separate Illustration)	1
28	7J2852	COVER	1
29	4J8425	GASKET	1
30	3J9298	COVER	2
31	3J9297	COVER	2
32	S1595	BOLT	4
	1K4703	WASHER (▭)	4
	5K5180	WASHER (▭)	4
33	2J7606	GASKET	2
34	3J4407	SEAL	1
35	8B4037	WASHER	1
36	7F7983	BEARING	2
37	5J3117	LEVER ASSEM.	1
38	2H5746	ADAPTER	1
39	5J880	HOUSING	1

C INDICATES CHANGE FROM PREVIOUS TYPE

127038

ONLY "CATERPILLAR" PARTS GIVE "CATERPILLAR" PERFORMANCE

C INDICATES CHANGE FROM PREVIOUS TYPE

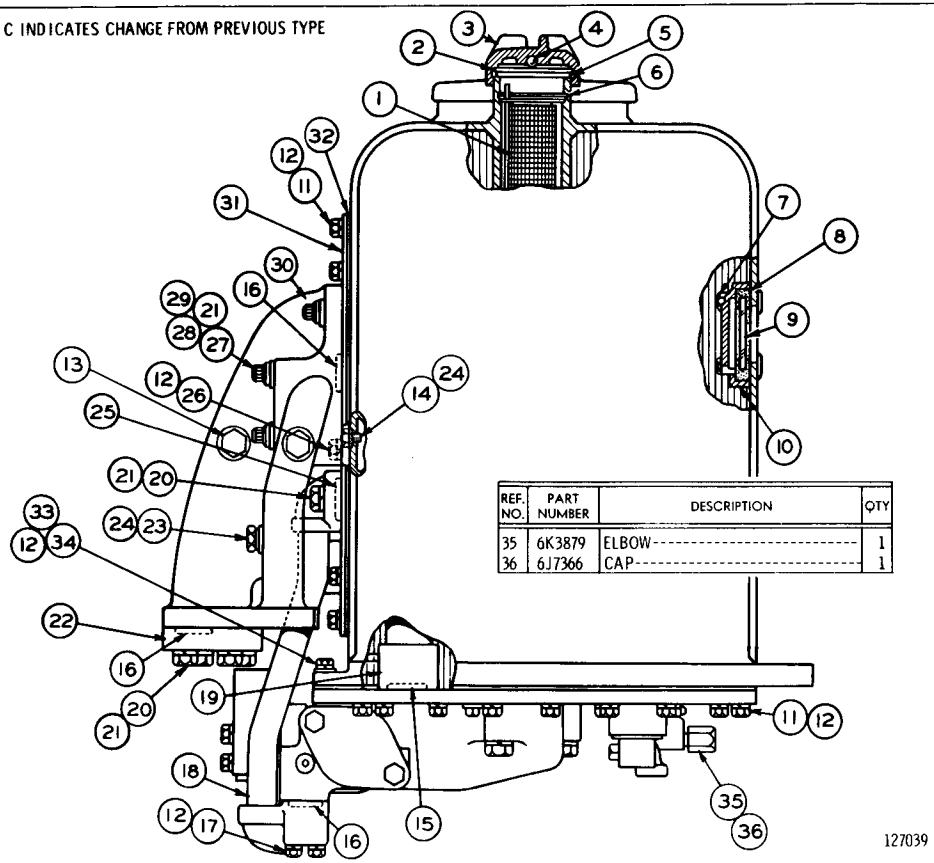

REF. NO.	PART NUMBER	DESCRIPTION	QTY
35	6K3879	ELBOW	1
36	6J7366	CAP	1

	REF NO.	PART NUMBER	DESCRIPTION	QTY
	1	2J2521	STRAINER ASSEM.	1
	2	6H5139	PLATE	1
	3	7H1447	CAP	1
	4	7B6368	BALL	1
	5	9H6454	GASKET	1
	6	6H9361	RING	1
	7	4J8265	NUT	4
	8	4J8251	GROMMET	1
	9	4J8252	GLASS	1
	10	4J8250	RETAINER	1
	11	1A2029	BOLT	60
	12	3B4506	LOCKWASHER	73
C	13	9S4185	PLUG	2
		2M9780	SEAL	2
	14	3K8460	PLUG	1
	15	8F3469	SEAL	2
	16	5J1584	SEAL	6
	17	S 1590	BOLT	4
	18	5J3480	TUBE ASSEM. -(11.55" long overall)- (5J3263 Valve to 6J1029 Cover Assem.)	1
	19	6J1942	TUBE ASSEM. -(16.65" long overall)-	1
	20	S 1585	BOLT	6
	21	3B4508	LOCKWASHER	12
	22	5J3545	COVER	1
C	23	9S4191	PLUG	1
		3J1907	SEAL	1
	24	1J9671	SEAL	1
	25	5J1356	SEAL	1
	26	L 1351	BOLT	1
	27	5J5793	BOLT ----------(2" Long)----------	1
	28	5J5794	BOLT ----------(3.5" Long)----------	2
	29	4K5175	BOLT ----------(1.5" Long)----------	3
	30	5J9930	MANIFOLD	1
	31	6J1029	COVER ASSEM.	1
	32	5J3140	GASKET	1
	33	4B4278	WASHER	8
	34	S 1588	BOLT	8

5J3693 TANK AND VALVE GROUP—Rear View—Part 1 of 3
183 & 193 Hydraulic Controls Serial No. 27H5802 to 27H6323 inclusive
8S9784 Complete Gasket Kit is available

5J3693 TANK AND VALVE GROUP–Right Hand Side View–Part 2 of 3
183 & 193 Hydraulic Controls Serial No. 27H5802 to 27H6323 inclusive

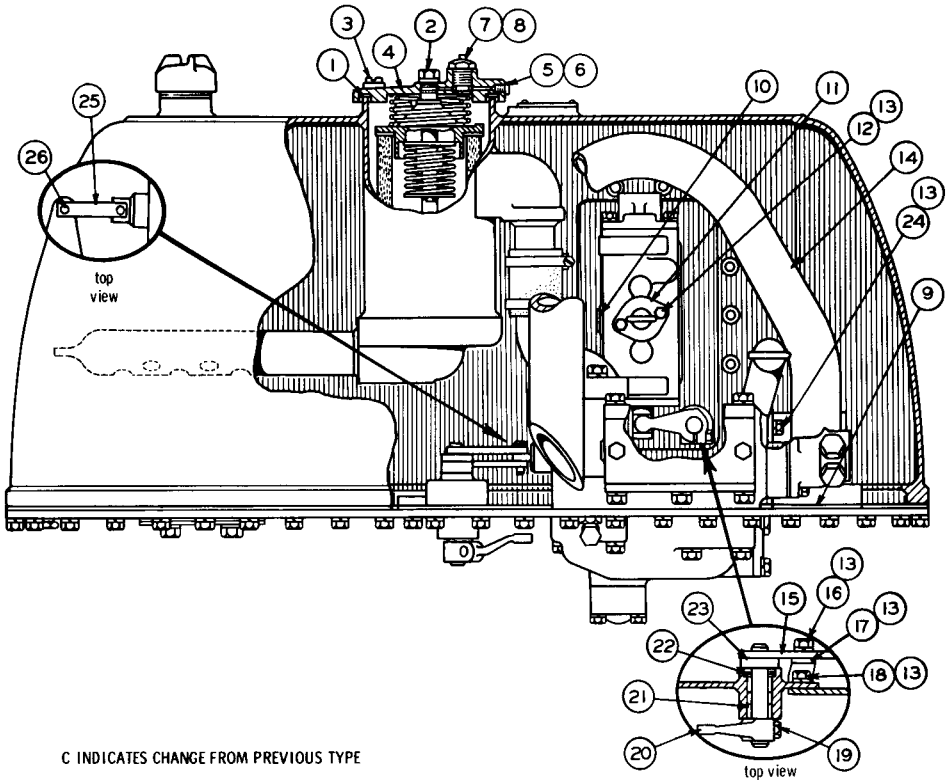

C INDICATES CHANGE FROM PREVIOUS TYPE

	REF. NO.	PART NUMBER	DESCRIPTION	QTY
	1	4K1557	GASKET	1
		6J5932	BOLT ASSEM.	1
	2	6F4855	SEAL	2
		3B9363	WASHER	1
	3	2J2864	PLUG	1
		6F5559	SEAL	1
	4	6J3953	COVER	1
C	5	9S8001	PLUG	1
	6	4J7533	SEAL	1
	7	6J468	INDICATOR ASSEM.	1
	8	2M9780	SEAL (Part of 6J468 Assem.)	1
	9	3R2425	GASKET	1
C	10	9S8005	PLUG	1
		3K360	SEAL	1
	11	5J2910	TUBE ASSEM.	1
	12	S1591	BOLT	2
	13	3B4506	LOCKWASHER	7
	14	6J1991	TUBE ASSEM.	1
	15	5J3541	LEVER ASSEM.	1
	16	S509	BOLT	1
	17	6J1996	STRAP	1
		S1588	BOLT	1
	18	L1351	BOLT	1
	19	1A2209	BOLT	1
	20	3J7582	LEVER	1
		1B8707	KEY	1
	21	7F7983	BEARING	2
	22	3J4407	SEAL	1
	23	7M2360	WASHER	1
	24	S1594	BOLT	1
	25	7J2378	LINK	2
		5F9199	PIN	2
	26	8S7803	RETAINER	2
		7H3912	BUSHING	1

127040

ONLY "CATERPILLAR" PARTS GIVE "CATERPILLAR" PERFORMANCE

REF NO	PART NUMBER	DESCRIPTION	QTY
1	4J6064	ELEMENT ASSEM.	1
2	5J1283	SPRING	1
3	5J1473	SEAT ASSEM.	1
4	2J918	VALVE	1
5	3F566	WASHER	1
6	2J8455	SPRING (Inner)	1
7	2J6114	SPRING (Outer)	1

REF. NO.	PART NUMBER	DESCRIPTION	QTY
8	4B4158	SCREW	2
9	2M6831	PLATE-----(Serial Number)-----	1
10	2J6540	CLAMP	2
11	4J7313	HOSE-------(3.38" long)----------	1
12	7J2441	ELBOW	1

REF. NO.	PART NUMBER	DESCRIPTION	QTY
13	S1587	BOLT	2
14	3B4508	LOCKWASHER	2
15	1H1200	PIN	1
16	2J917	RETAINER	1
17	1H9696	SEAL	3
	7J2772	TANK ASSEM.	1
18	5J96	STUD	4
	2J2411	BLOCK	1
19	6J2237	BOSS	18
		(Parts of 7J2772 Assem.)	
20	6J1053	GASKET	1
21	6J1054	PLATE	1
22	5J3039	CONTROL VALVE GROUP	1
		(See Separate Illustration)	
23	5J3263	RELIEF VALVE GROUP	1
		(See Separate Illustration)	
24	5J3200	LEVER	1
	1B8706	KEY	1
25	1A2029	BOLT	4
	3B4506	LOCKWASHER	8
26	S1588	BOLT	6
27	7J2026	CONTROL VALVE GROUP	1
		(See Separate Illustration)	
28	7J2852	COVER	1
29	4J8425	GASKET	1
30	3J9298	COVER	2
31	3J9297	COVER	2
	S1595	BOLT	4
32	1K4703	WASHER (▭)	4
	5K5180	WASHER (▭)	4
33	2J7606	GASKET	2
34	3J4407	SEAL	1
35	8B4037	WASHER	1
36	7F7983	BEARING	2
37	5J3117	LEVER ASSEM.	1
38	2H5746	ADAPTER	1
39	5J880	HOUSING	1

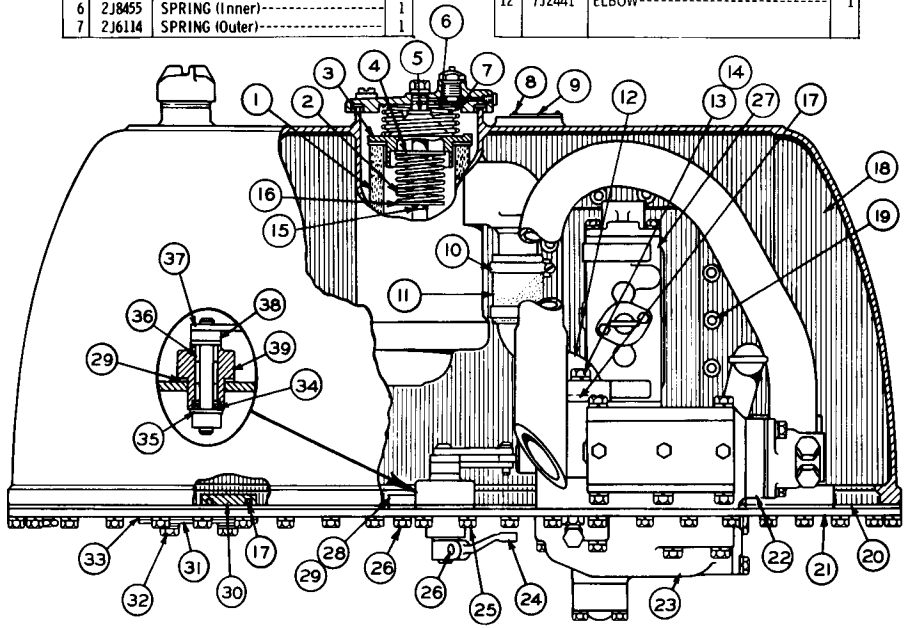

127041

5J3693 TANK AND VALVE GROUP—Right Hand Side View—Part 3 of 3
183 & 193 Hydraulic Controls Serial No. 27H5802 to 27H6323 inclusive
5J3263, 5J3039 & 7J2026 Valve parts are shown on Pages 15, 15B, 16A & 17

5J3693 TANK AND VALVE GROUP–Rear View–Part 1 of 3
183 & 193 Hydraulic Controls Serial No. 27H6324 to 27H6479 inclusive
8S9784 Complete Gasket Kit is available

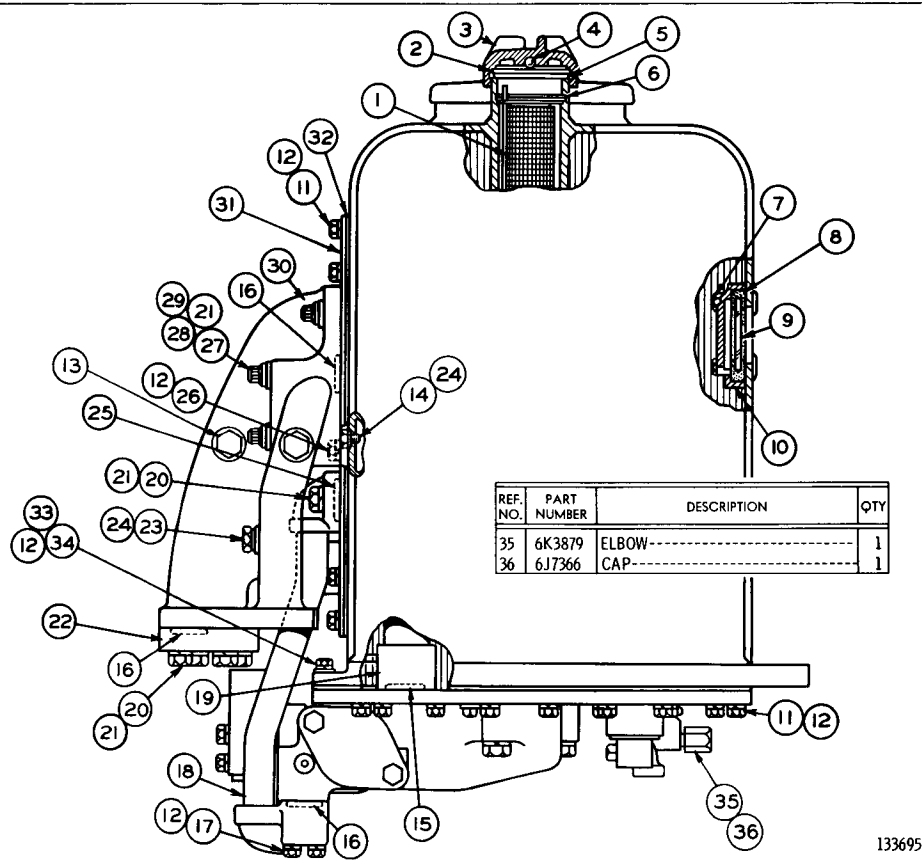

REF. NO.	PART NUMBER	DESCRIPTION	QTY
35	6K3879	ELBOW	1
36	6J7366	CAP	1

REF. NO.	PART NUMBER	DESCRIPTION	QTY
1	2J2521	STRAINER ASSEM.	1
2	6H5139	PLATE	1
3	7H1447	CAP	1
4	7B6368	BALL	1
5	9H6454	GASKET	1
6	6H9361	RING	1
7	4J8265	NUT	4
8	4J8251	GROMMET	1
9	4J8252	GLASS	1
10	4J8250	RETAINER	1
11	1A2029	BOLT	60
12	3B4506	LOCKWASHER	73
13	9S4185	PLUG	2
	2M9780	SEAL	2
14	3K8460	PLUG	1
15	8F3469	SEAL	2
16	5J1584	SEAL	6
17	S 1590	BOLT	4
18	5J3480	TUBE ASSEM. -(11.55" long overall)- (5J3263 Valve to 6J1029 Cover Assem.)	1
19	6J1942	TUBE ASSEM. -(16.65" long overall)-	1
20	S 1585	BOLT	6
21	3B4508	LOCKWASHER	12
22	5J3545	COVER	1
23	9S4191	PLUG	1
	3J1907	SEAL	1
24	1J9671	SEAL	1
25	5J1356	SEAL	1
26	L 1351	BOLT	1
27	5J5793	BOLT-(2" Long)	1
28	5J5794	BOLT-(3.5" Long)	2
29	4K5175	BOLT-(1.5" Long)	3
30	5J9930	MANIFOLD	1
31	6J1029	COVER ASSEM.	1
32	5J3140	GASKET	1
33	4B4278	WASHER	8
34	S 1588	BOLT	8

ONLY "CATERPILLAR" PARTS GIVE "CATERPILLAR" PERFORMANCE

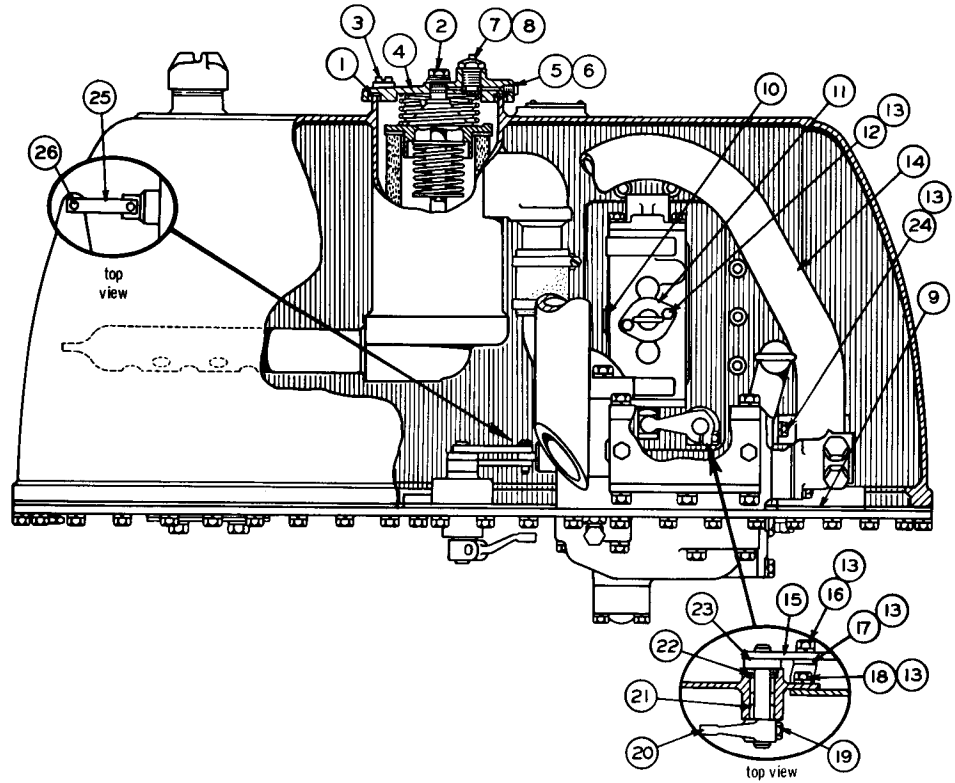

REF. NO.	PART NUMBER	DESCRIPTION	QTY
1	4K1557	GASKET	1
2	7J5581	BOLT	1
	6F4855	SEAL	2
3	2J2864	PLUG	1
	6F5559	SEAL	1
4	6J3953	COVER	1
5	9S8001	PLUG	1
6	4J7533	SEAL	1
7	6J468	INDICATOR ASSEM.	1
8	2M9780	SEAL (Part of 6J468 Assem.)	1
9	3R2425	GASKET	1
10	9S8005	PLUG	1
	3K360	SEAL	1
11	5J2910	TUBE ASSEM.	1
12	S1591	BOLT	2
13	3B4506	LOCKWASHER	7
14	6J1991	TUBE ASSEM.	1
15	5J3541	LEVER ASSEM.	1
16	S509	BOLT	1
17	6J1996	STRAP	1
	S1588	BOLT	1
18	L1351	BOLT	1
19	1A2209	BOLT	1
20	3J7582	LEVER	1
	1B8707	KEY	1
21	7F7983	BEARING	2
22	3J4407	SEAL	1
23	7M2360	WASHER	1
24	S1594	BOLT	1
25	7J2378	LINK	2
26	5F9199	PIN	2
	8S7803	RETAINER	2
	7H3912	BUSHING	1

133696

5J3693 TANK AND VALVE GROUP—Right Hand Side View—Part 2 of 3
183 & 193 Hydraulic Controls Serial No. 27H6324 to 27H6479 inclusive

5J3693 TANK AND VALVE GROUP—Right Hand Side View—Part 3 of 3
183 & 193 Hydraulic Controls Serial No. 27H6324 to 27H6479 inclusive
5J3263, 5J3039 & 7J2026 Valve parts are shown on Pages 15B, 16A & 17A

REF NO	PART NUMBER	DESCRIPTION	QTY
1	4J6064	ELEMENT ASSEM.	1
2	5J2926	SPRING	1
3	5J1473	SEAT ASSEM.	1
4	2J198	VALVE	1
5	5J880	HOUSING	1
6	2J8455	SPRING (Inner)	1
7	2J6114	SPRING (Outer)	1

REF. NO.	PART NUMBER	DESCRIPTION	QTY
8	4B4158	SCREW	2
9	2M6831	PLATE-----(Serial Number)-----	1
10	4M7139	CLAMP	2
11	7J7678	HOSE-------(3.38" long)----------	1
12	7J2441	ELBOW	1

REF. NO.	PART NUMBER	DESCRIPTION	QTY
13	S1587	BOLT	2
14	3B4508	LOCKWASHER	2
15	1H1200	PIN	1
16	2J917	RETAINER	1
17	1H9696	SEAL	3
18	7J2772	TANK ASSEM.	1
	5J96	STUD	4
	2J2411	BLOCK	1
19	6J2237	BOSS (Parts of 7J2772 Assem.)	18
20	6J1053	GASKET	1
21	6J1054	PLATE	1
22	5J3039	CONTROL VALVE GROUP (See Separate Illustration)	1
23	5J3263	RELIEF VALVE GROUP (See Separate Illustration)	1
24	5J3200	LEVER	1
	1B8706	KEY	1
25	1A2029	BOLT	4
	3B4506	LOCKWASHER	8
26	S1588	BOLT	6
27	7J2026	CONTROL VALVE GROUP (See Separate Illustration)	1
28	7J2852	COVER	1
29	4J8425	GASKET	1
30	3J9298	COVER	2
31	3J9297	COVER	2
32	S1585	BOLT	4
	1K4703	WASHER ( )	4
	5K5180	WASHER ( )	4
33	2J7606	GASKET	2
34	3J4407	SEAL	1
35	8B4037	WASHER	1
36	7F7983	BEARING	2
37	5J3117	LEVER ASSEM.	1
38	2H5746	ADAPTER	1
39	5L5840	WASHER------(.505" Thick)-------	1
	5B9628	WASHER-----(.0650" Thick)-------	1

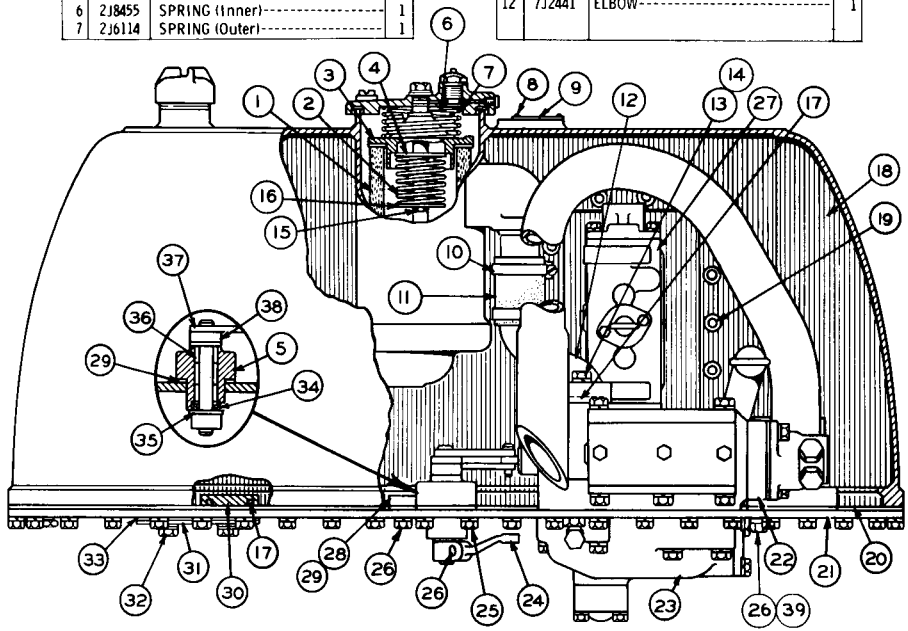

133697

ONLY "CATERPILLAR" PARTS GIVE "CATERPILLAR" PERFORMANCE

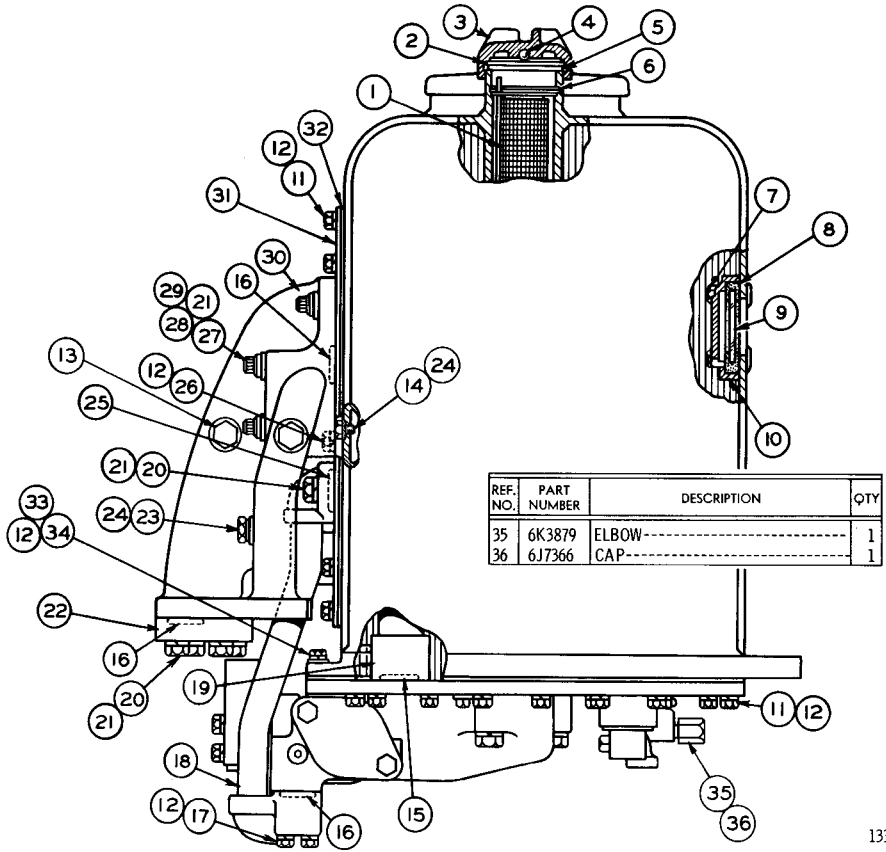

REF. NO.	PART NUMBER	DESCRIPTION	QTY
35	6K3879	ELBOW	1
36	6J7366	CAP	1

REF. NO.	PART NUMBER	DESCRIPTION	QTY.
1	2J2521	STRAINER ASSEM.	1
2	6H5139	PLATE	1
3	7H1447	CAP	1
4	7B6368	BALL	1
5	9H6454	GASKET	1
6	6H9361	RING	1
7	4J8265	NUT	4
8	4J8251	GROMMET	1
9	4J8252	GLASS	1
10	4J8250	RETAINER	1
11	1A2029	BOLT	60
12	3B4506	LOCKWASHER	73
13	9S4185	PLUG	2
	2M9780	SEAL	2
14	3K8460	PLUG	1
15	8F3469	SEAL	2
16	5J1584	SEAL	6
17	S 1590	BOLT	4
18	5J3480	TUBE ASSEM. -(11, 55" long overall) (5J3263 Valve to 6J1029 Cover Assem.)	1
19	6J1942	TUBE ASSEM. -(16, 65" long overall)	1
20	S 1585	BOLT	6
21	3B4508	LOCKWASHER	12
22	5J3545	COVER	1
23	9S4191	PLUG	1
	3J1907	SEAL	1
24	1J9671	SEAL	1
25	5J1356	SEAL	1
26	L 1351	BOLT	1
27	5J5793	BOLT-(2" Long)	1
28	5J5794	BOLT-(3.5" Long)	2
29	4K5175	BOLT-(1.5" Long)	3
30	5J9930	MANIFOLD	1
31	6J1029	COVER ASSEM.	1
32	5J3140	GASKET	1
33	4B4278	WASHER	8
34	S 1588	BOLT	8

5J3693 TANK AND VALVE GROUP—Rear View—Part 1 of 3
183 & 193 Hydraulic Controls Serial No. 27H6480 to 27H6953 inclusive
8S9784 Complete Gasket Kit is available

5J3693 TANK AND VALVE GROUP—Right Hand Side View—Part 2 of 3
183 & 193 Hydraulic Controls Serial No. 27H6480 to 27H6953 inclusive

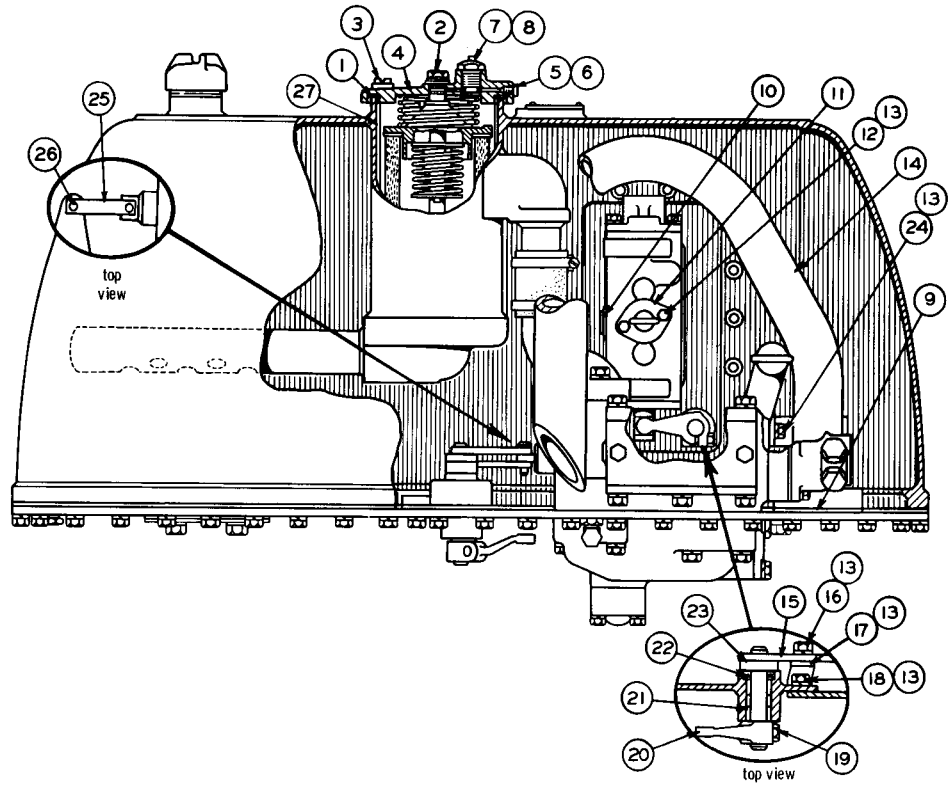

REF. NO.	PART NUMBER	DESCRIPTION	QTY
1	4K1557	GASKET	1
2	7J5581	BOLT	1
	6F4855	SEAL	2
3	2J2864	PLUG	1
	6F5559	SEAL	1
4	6J3953	COVER	1
5	9S8001	PLUG	1
6	4J7533	SEAL	1
7	6J468	INDICATOR ASSEM.	1
8	2M9780	SEAL (Part of 6J468 Assem.)	1
9	3R2425	GASKET	1
10	9S8005	PLUG	1
	3K360	SEAL	1
11	5J2910	TUBE ASSEM.	1
12	S1591	BOLT	2
13	3B4506	LOCKWASHER	7
14	6J1991	TUBE ASSEM.	1
15	5J3541	LEVER ASSEM.	1
16	S509	BOLT	1
17	6J1996	STRAP	1
	S1588	BOLT	1
18	L1351	BOLT	1
19	1A2209	BOLT	1
20	3J7582	LEVER	1
	1B8707	KEY	1
21	7F7983	BEARING	2
22	3J4407	SEAL	1
23	7M2360	WASHER	1
24	S1594	BOLT	1
25	7J2378	LINK	2
26	5F9199	PIN	2
	8S7803	RETAINER	2
	7H3912	BUSHING	1
27	7J9938	STRAINER ASSEM.	1

135064

ONLY "CATERPILLAR" PARTS GIVE "CATERPILLAR" PERFORMANCE

REF NO	PART NUMBER	DESCRIPTION	QTY
1	4J6064	ELEMENT ASSEM.	1
2	5J2926	SPRING	1
3	5J1473	SEAT	1
4	2J198	VALVE	1
5	5J880	HOUSING	1
6	2J8455	SPRING (Inner)	1
7	2J6114	SPRING (Outer)	1

REF. NO.	PART NUMBER	DESCRIPTION	QTY
8	4B4158	SCREW	2
9	2M6831	PLATE-----(Serial Number)	1
10	4M7139	CLAMP	2
11	7J7678	HOSE-------(3.38" long)	1
12	7J2441	ELBOW	1

REF. NO.	PART NUMBER	DESCRIPTION	QTY
13	S1587	BOLT	2
14	3B4508	LOCKWASHER	2
15	1H1200	PIN	1
16	2J917	RETAINER	1
17	1H9696	SEAL	3
	7J2772	TANK ASSEM.	1
18	5J96	STUD	4
	2J2411	BLOCK	1
19	6J2237	BOSS	18
		(Parts of 7J2772 Assem.)	
20	6J1053	GASKET	1
21	6J1054	PLATE	1
22	5J3039	CONTROL VALVE GROUP (See Separate Illustration)	1
23	5J3263	RELIEF VALVE GROUP (See Separate Illustration)	1
24	5J3200	LEVER	1
	1B8706	KEY	1
25	1A2029	BOLT	4
	3B4506	LOCKWASHER	8
26	S1588	BOLT	5
27	7J2026	CONTROL VALVE GROUP (See Separate Illustration)	1
28	7J2852	COVER	1
29	4J8425	GASKET	1
30	3J9298	COVER	2
31	3J9297	COVER	2
	S1585	BOLT	4
32	1K4703	WASHER ( )	4
	5K5180	WASHER ( )	4
33	2J7606	GASKET	2
34	3J4407	SEAL	1
35	8B4037	WASHER	1
36	7F7983	BEARING	2
37	5J3117	LEVER ASSEM.	1
38	2H5746	ADAPTER	1
39	5L5840	WASHER-------(.505" Thick)	1
	5B9628	WASHER------(.0650" Thick)	1
40	S1594	BOLT	1

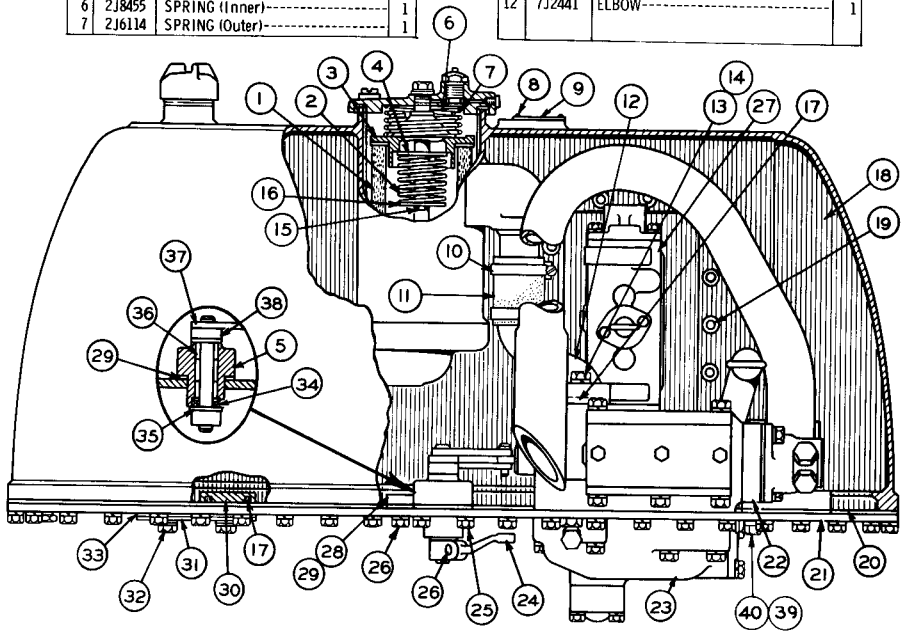

135065

5J3693 TANK AND VALVE GROUP—Right Hand Side View—Part 3 of 3
183 & 193 Hydraulic Control Serial No. 27H6480 to 27H6953 inclusive
5J3263, 5J3039 & 7J2026 Valve parts are shown on Pages 15B, 16A and 17A

5J3693 TANK AND VALVE GROUP—Rear View—Part 1 of 3
183 and 193 Hydraulic Controls Serial No. 27H6954 to 27H7000 inclusive
8S9784 Complete Gasket Kit is available

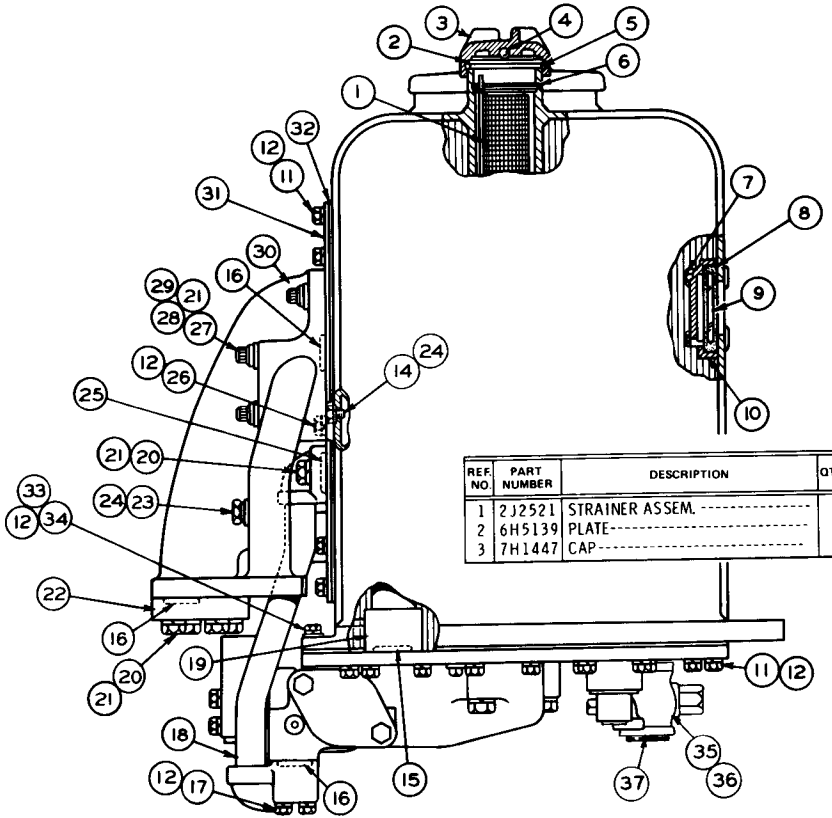

REF. NO.	PART NUMBER	DESCRIPTION	QTY
1	2J2521	STRAINER ASSEM.	1
2	6H5139	PLATE	1
3	7H1447	CAP	1

4	7B6368	BALL	1
5	9H6454	GASKET	1
6	6H9361	RING	1
7	4J8265	NUT	4
8	4J8251	GROMMET	1
9	4J8252	GLASS	1
10	4J8250	RETAINER	1
11	1A2029	BOLT	60
12	3B4506	LOCKWASHER	73
14	3K8460	PLUG	1
15	8F3469	SEAL	2
C 16	6J3575	SEAL	6
17	S1590	BOLT	4
18	5J3480	TUBE ASSEM. ---(11.55 in. long)---	1
19	6J1942	TUBE ASSEM. ---(16.65 in. long)---	1
20	S1585	BOLT	6
21	3B4508	LOCKWASHER	12
22	5J3545	COVER	1
23	9S4191	PLUG	1
	3J1907	SEAL	1
24	1J9671	SEAL	1
C 25	6J3600	SEAL	1
26	L1351	BOLT	1
27	5J5793	BOLT---------(2 in. long)-------	1
28	5J5794	BOLT---------(3.5 in. long)-------	2
29	4K5175	BOLT---------(1.5 in. long)-------	3
30	5J9930	MANIFOLD	1
31	6J1029	COVER ASSEM.	1
32	5J3140	GASKET	1
33	4B4278	WASHER	8
34	S1588	BOLT	8
C 35	8J8854	VALVE	1
C 36	8J8853	FITTING	1
C 37	3B551	PLUG	1

C INDICATES CHANGE

144303

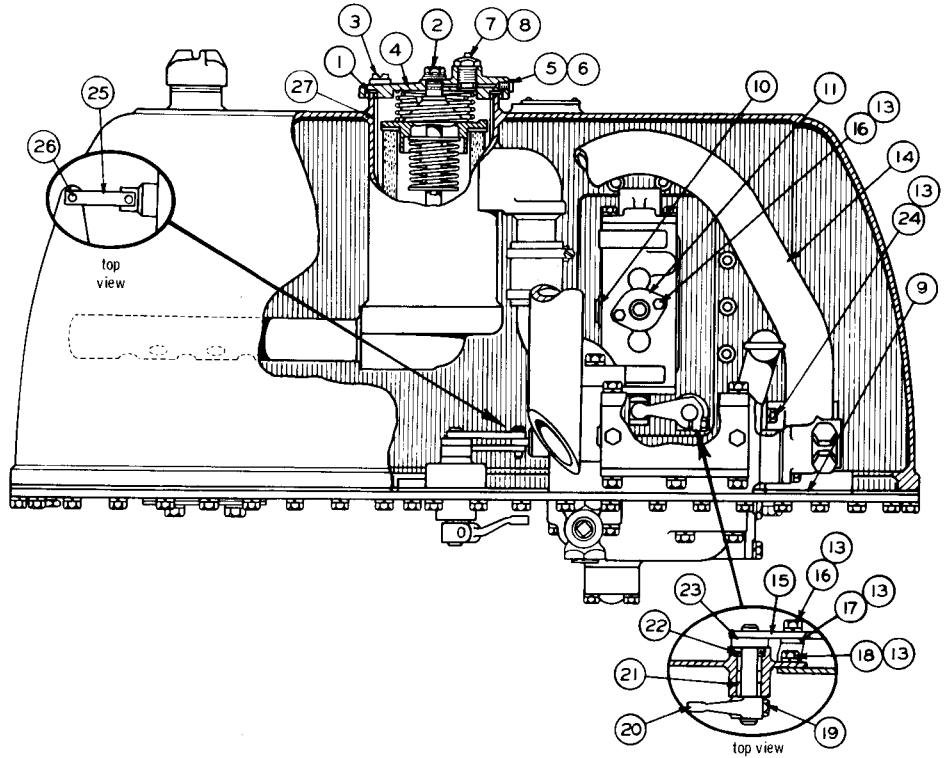

REF. NO.	PART NUMBER	DESCRIPTION	QTY
1	4K1557	GASKET	1
2	7J5581	BOLT	1
	6F4855	SEAL	2
3	2J2864	PLUG	1
	6F5559	SEAL	1
4	6J3953	COVER	1
5	9S8001	PLUG	1
6	4J7533	SEAL	1
7	6J468	INDICATOR ASSEM.	1
8	2M9780	SEAL (Part of 6J468 Assem.)	1
9	3R2425	GASKET	1
10	9S8005	PLUG	1
	3K360	SEAL	1
C 11	8J1645	TUBE ASSEM.	1
13	3B4506	LOCKWASHER	7
14	6J1991	TUBE ASSEM.	1
15	5J3541	LEVER ASSEM.	1
C 16	S509	BOLT	3
17	6J1996	STRAP	1
	S1588	BOLT	1
18	L1351	BOLT	1
19	1A2209	BOLT	1
20	3J7582	LEVER	1
	1B8707	KEY	1
21	7F7983	BEARING	2
22	3J4407	SEAL	1
23	7M2360	WASHER	1
24	S1594	BOLT	1
25	7J2378	LINK	2
26	5F9199	PIN	2
	8S7803	RETAINER	2
	7H3912	BUSHING	1
27	7J9938	STRAINER ASSEM.	1

C INDICATES CHANGE 144304

5J3693 TANK AND VALVE GROUP—Right Hand Side View—Part 2 of 3
183 and 193 Hydraulic Controls Serial No. 27H6954 to 27H7000 inclusive

5J3693 TANK AND VALVE GROUP—Right Hand Side View—Part 3 of 3
183 and 193 Hydraulic Controls Serial No. 27H6954 to 27H7000 inclusive
5J3263, 5J3039 and 7J2026 Valve parts are shown on Pages 15B, 16A and 17A

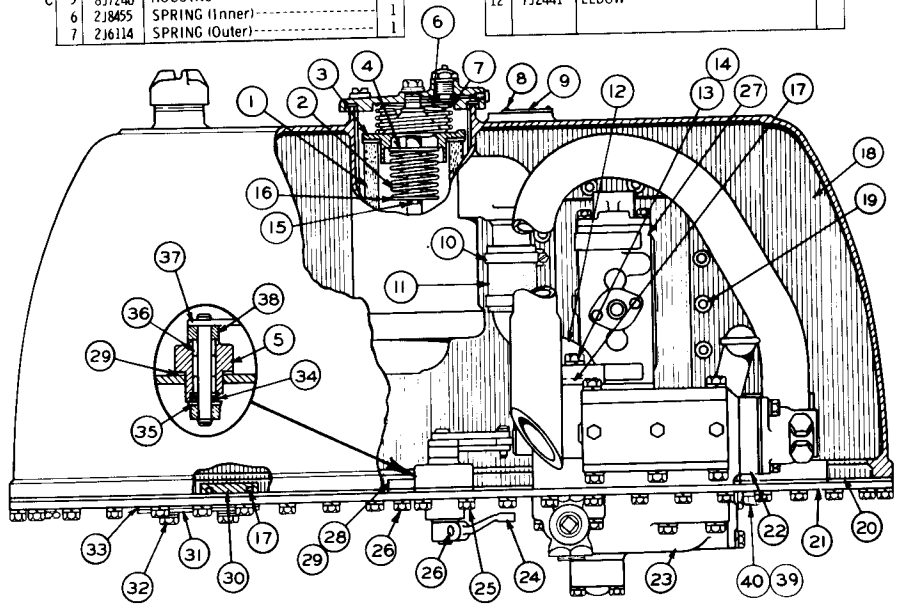

REF NO	PART NUMBER	DESCRIPTION	QTY
1	4J6064	ELEMENT ASSEM.	1
2	5J2926	SPRING	1
3	5J1473	SEAT	1
4	2J198	VALVE	1
C 5	8J7240	HOUSING	1
6	2J8455	SPRING (Inner)	1
7	2J6114	SPRING (Outer)	1
8	4B4158	SCREW	2
9	2M6831	PLATE (Serial Number)	1
10	4M7139	CLAMP	2
11	7J7678	HOSE (3.38" long)	1
12	7J2441	ELBOW	1

13	S1587	BOLT	2
14	3B4508	LOCKWASHER	2
15	1H1200	PIN	1
16	2J917	RETAINER	1
17	1H9696	SEAL	3
18	7J2772	TANK ASSEM.	1
	5J96	STUD	4
	2J2411	BLOCK	1
19	6J2237	BOSS (Parts of 7J2772 Assem.)	18
20	6J1053	GASKET	1
C 21	8J9260	PLATE	1
22	5J3039	CONTROL VALVE GROUP (See Separate Illustration)	1
23	5J3263	RELIEF VALVE GROUP (See Separate Illustration)	1
24	5J3200	LEVER	1
	1B8706	KEY	1
25	1A2029	BOLT	4
	3B4506	LOCKWASHER	8
26	S1588	BOLT	5
27	7J2026	CONTROL VALVE GROUP (See Separate Illustration)	1
28	7J2852	COVER	1
29	4J8425	GASKET	1
30	3J9298	COVER	2
31	3J9297	COVER	2
32	S1585	BOLT	4
	1K4703	WASHER ( )	4
	5K5180	WASHER ( )	4
33	2J7606	GASKET	2
34	3J4407	SEAL	1
35	8B4037	WASHER	1
36	7F7983	BEARING	2
37	5J3117	LEVER ASSEM.	1
38	2H5746	ADAPTER	1
39	5L5840	WASHER (.505" Thick)	1
	5B9628	WASHER (.0650" Thick)	1
40	S1594	BOLT	1

C INDICATES CHANGE

144305

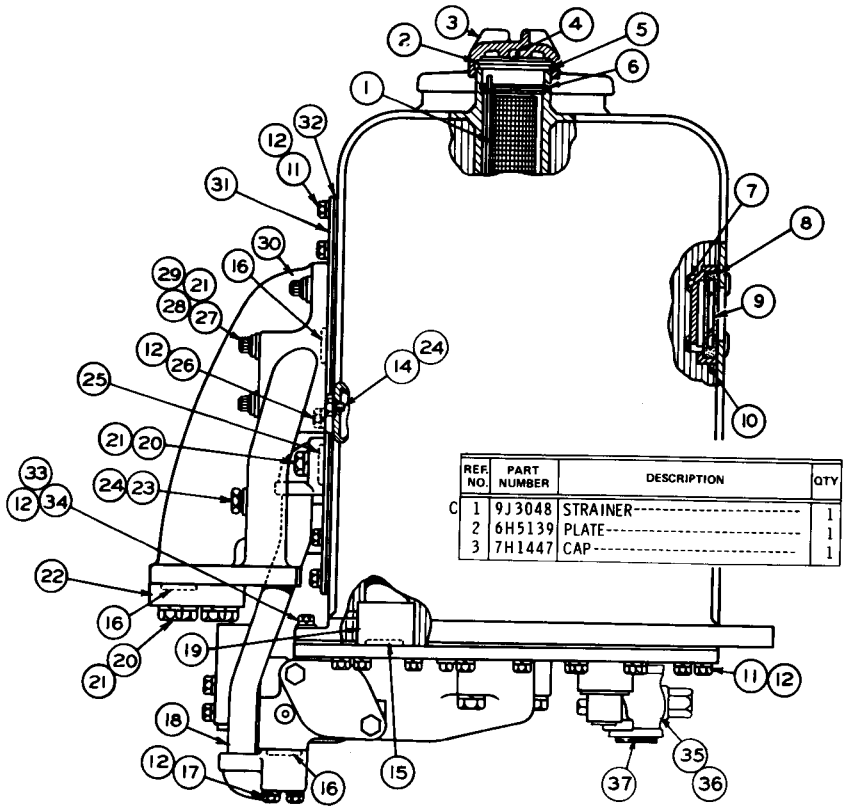

REF. NO.	PART NUMBER	DESCRIPTION	QTY
C 1	9J3048	STRAINER	1
2	6H5139	PLATE	1
3	7H1447	CAP	1

	4	7B6368	BALL	1
	5	9H6454	GASKET	1
C	6	5K216	SEAL	1
	7	4J8265	NUT	4
	8	4J8251	GROMMET	1
	9	4J8252	GLASS	1
	10	4J8250	RETAINER	1
	11	1A2029	BOLT	60
	12	3B4506	LOCKWASHER	73
	14	3K8460	PLUG	1
	15	8F3469	SEAL	2
	16	6J3575	SEAL	6
	17	S1590	BOLT	4
	18	5J3480	TUBE ASSEM. ---(11.55 in. long)---	1
	19	6J1942	TUBE ASSEM. ---(16.65 in. long)---	1
	20	S1585	BOLT	6
	21	3B4508	LOCKWASHER	12
	22	5J3545	COVER	1
	23	9S4191	PLUG	1
		3J1907	SEAL	1
	24	1J9671	SEAL	1
	25	6J3600	SEAL	1
	26	L1351	BOLT	1
	27	5J5793	BOLT---------(2 in. long)-------	1
	28	5J5794	BOLT---------(3.5 in. long)-------	2
	29	4K5175	BOLT---------(1.5 in. long)-------	3
	30	5J9930	MANIFOLD	1
	31	6J1029	COVER ASSEM.	1
	32	5J3140	GASKET	1
	33	4B4278	WASHER	8
	34	S1588	BOLT	8
	35	8J8854	VALVE	1
	36	8J8853	FITTING	1
	37	3B551	PLUG	1

C INDICATES CHANGE

147897

5J3693 TANK AND VALVE GROUP—Rear View—Part 1 of 3
183 and 193 Hydraulic Controls Serial No. 27H7001—Up
8S9784 Complete Gasket Kit is available

5J3693 TANK AND VALVE GROUP—Right Hand Side View—Part 2 of 3
183 and 193 Hydraulic Controls Serial No. 27H7001—Up

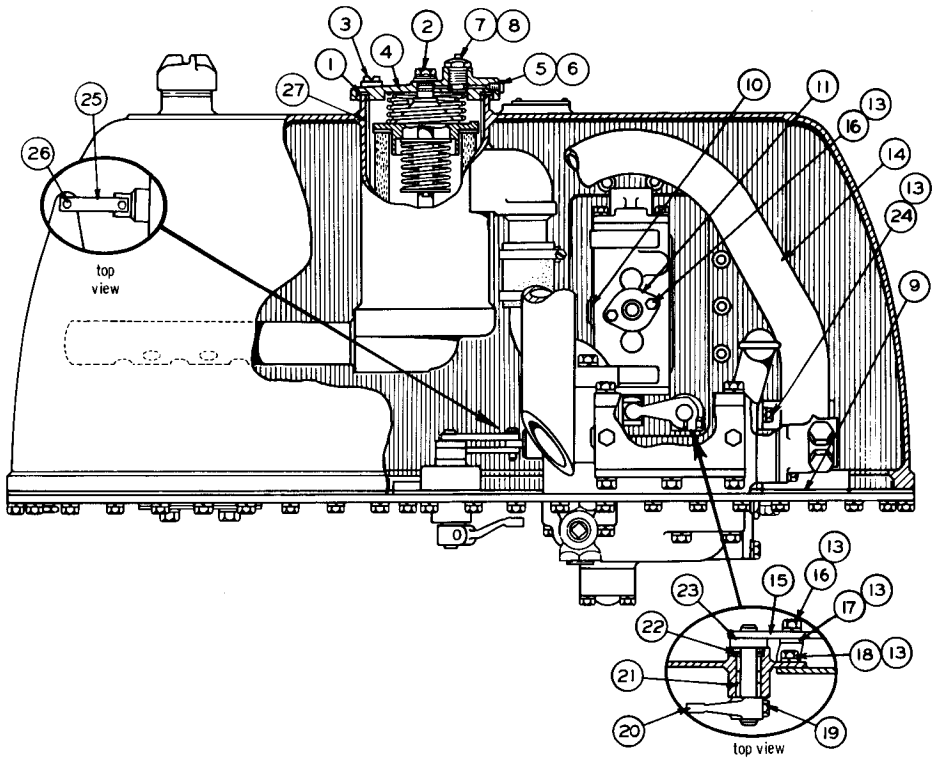

REF. NO.	PART NUMBER	DESCRIPTION	QTY
1	4K1557	GASKET	1
2	7J5581	BOLT	1
	6F4855	SEAL	2
3	2J2864	PLUG	1
	6F5559	SEAL	1
4	6J3953	COVER	1
5	9S8001	PLUG	1
6	4J7533	SEAL	1
7	6J468	INDICATOR ASSEM.	1
8	2M9780	SEAL (Part of 6J468 Assem.)	1
9	3R2425	GASKET	1
10	9S8005	PLUG	1
	3K360	SEAL	1
11	8J1645	TUBE ASSEM.	1
13	3B4506	LOCKWASHER	7
14	6J1991	TUBE ASSEM.	1
15	5J3541	LEVER ASSEM.	1
16	S509	BOLT	3
17	6J1996	STRAP	1
	S1588	BOLT	1
18	L1351	BOLT	1
19	1A2209	BOLT	1
20	3J7582	LEVER	1
	1B8707	KEY	1
21	7F7983	BEARING	2
22	3J4407	SEAL	1
23	7M2360	WASHER	1
24	S1594	BOLT	1
25	7J2378	LINK	2
26	5F9199	PIN	2
	8S7803	RETAINER	2
	7H3912	BUSHING	1
27	7J9938	STRAINER ASSEM.	1

147898

REF NO	PART NUMBER	DESCRIPTION	QTY
1	4J6064	ELEMENT ASSEM.	1
2	5J2926	SPRING	1
3	5J1473	SEAT	1
4	2J198	VALVE	1
5	8J7240	HOUSING	1
6	2J8455	SPRING (Inner)	1
7	2J6114	SPRING (Outer)	1
8	4B4158	SCREW	2
9	2M6831	PLATE------(Serial Number)	1
10	4M7139	CLAMP	2
11	7J7678	HOSE-------(3.38" long)	1
12	7J2441	ELBOW	1
13	S1587	BOLT	2
14	3B4508	LOCKWASHER	2
15	1H1200	PIN	1
16	2J917	RETAINER	1
17	1H9696	SEAL	3
18	7J2772	TANK ASSEM.	1
	5J96	STUD	4
	2J2411	BLOCK	1
19	6J2237	BOSS (Parts of 7J2772 Assem.)	18
20	6J1053	GASKET	1
21	8J9260	PLATE	1
22	5J3039	CONTROL VALVE GROUP (See Separate Illustration)	1
23	5J3263	RELIEF VALVE GROUP (See Separate Illustration)	1
24	5J3200	LEVER	1
	1B8706	KEY	1
25	1A2029	BOLT	4
	3B4506	LOCKWASHER	8
26	S1588	BOLT	5
27	7J2026	CONTROL VALVE GROUP (See Separate Illustration)	1
28	7J2852	COVER	1
29	4J8425	GASKET	1
30	3J9298	COVER	2
31	3J9297	COVER	2
32	S1585	BOLT	4
	1K4703	WASHER ( )	4
	5K5180	WASHER ( )	4
33	2J7606	GASKET	2
34	3J4407	SEAL	1
35	8B4037	WASHER	1
36	7F7983	BEARING	2
37	5J3117	LEVER ASSEM.	1
38	2H5746	ADAPTER	1
39	5L5840	WASHER-------(.505" Thick)	1
	5B9628	WASHER------(.0650" Thick)	1
40	S1594	BOLT	1

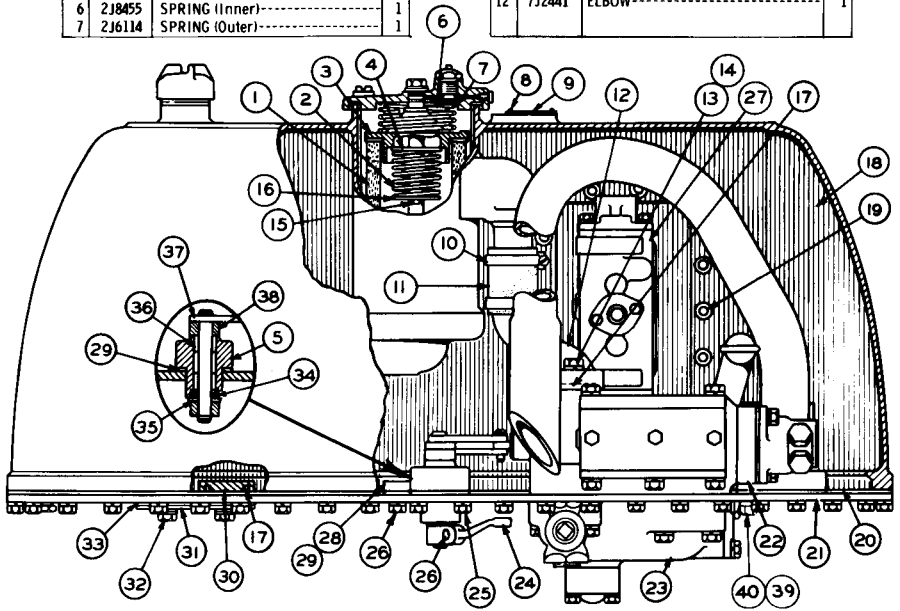

147899

5J3693 TANK AND VALVE GROUP—Right Hand Side View—Part 3 of 3
183 and 193 Hydraulic Controls Serial No. 27H7001—Up
5J3263, 5J3039 and 7J2026 Valve parts are shown on Pages 15B, 16A and 17A

5J3693 TANK AND VALVE GROUP—Right Hand Side View—Part 1 of 3—Type 2
183 & 193 Hydraulic Control Serial No. 27H7001—Up
8S9784 Complete Gasket Kit is available

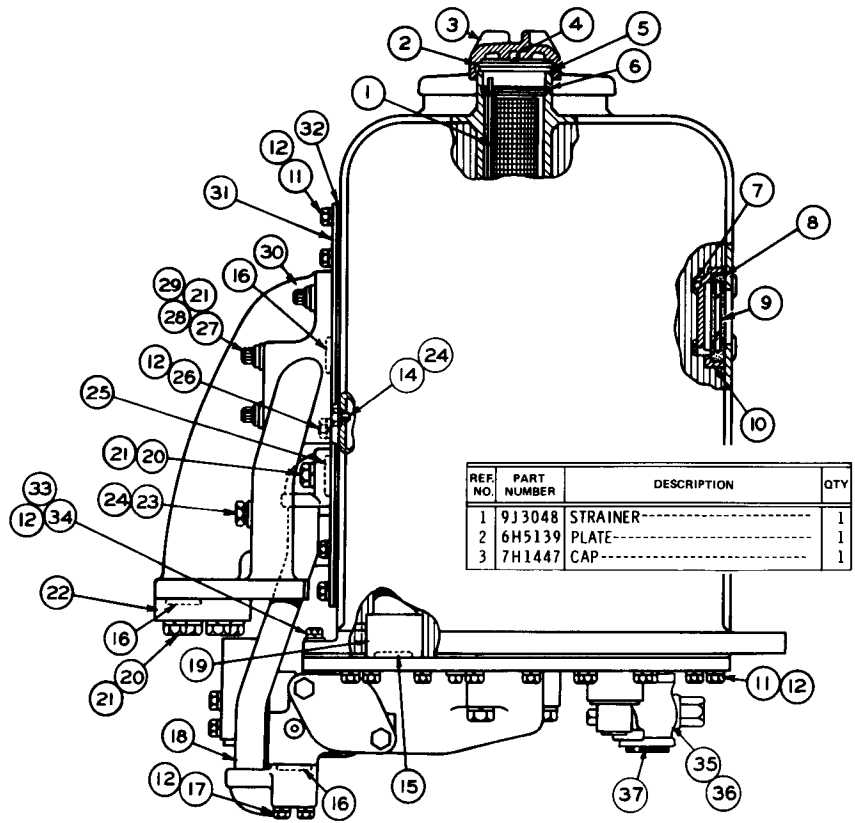

REF. NO.	PART NUMBER	DESCRIPTION	QTY
1	9J3048	STRAINER	1
2	6H5139	PLATE	1
3	7H1447	CAP	1

4	7B6368	BALL	1
5	9H6454	GASKET	1
6	5K216	SEAL	1
7	4J8265	NUT	4
8	4J8251	GROMMET	1
9	4J8252	GLASS	1
10	4J8250	RETAINER	1
11	1A2029	BOLT	60
12	3B4506	LOCKWASHER	73
14	3K8460	PLUG	1
15	8F3469	SEAL	2
16	6J3575	SEAL	6
17	S1590	BOLT	4
18	5J3480	TUBE ASSEM.-50.80 mm(2 in.) long	1
19	6J1942	TUBE ASSEM. 88.90 mm(3.50 in.)long	1
20	S1585	BOLT	6
21	3B4508	LOCKWASHER	12
22	5J3545	COVER	1
23	9S4191	PLUG	1
	3J1907	SEAL	1
24	1J9671	SEAL	1
25	6J3600	SEAL	1
26	L1351	BOLT	1
27	5J5793	BOLT-50.80 mm(2 in.) long	1
28	5J5794	BOLT-88.90 mm(3.50 in.) long	2
29	4K5175	BOLT-38.10 mm(1.50 in.) long	3
30	5J9930	MANIFOLD	1
31	6J1029	COVER ASSEM.	1
32	5J3140	GASKET	1
33	4B4278	WASHER	8
34	S1588	BOLT	8
35	8J8854	VALVE	1
36	8J8853	FITTING	1
37	3B551	PLUG	1

162388

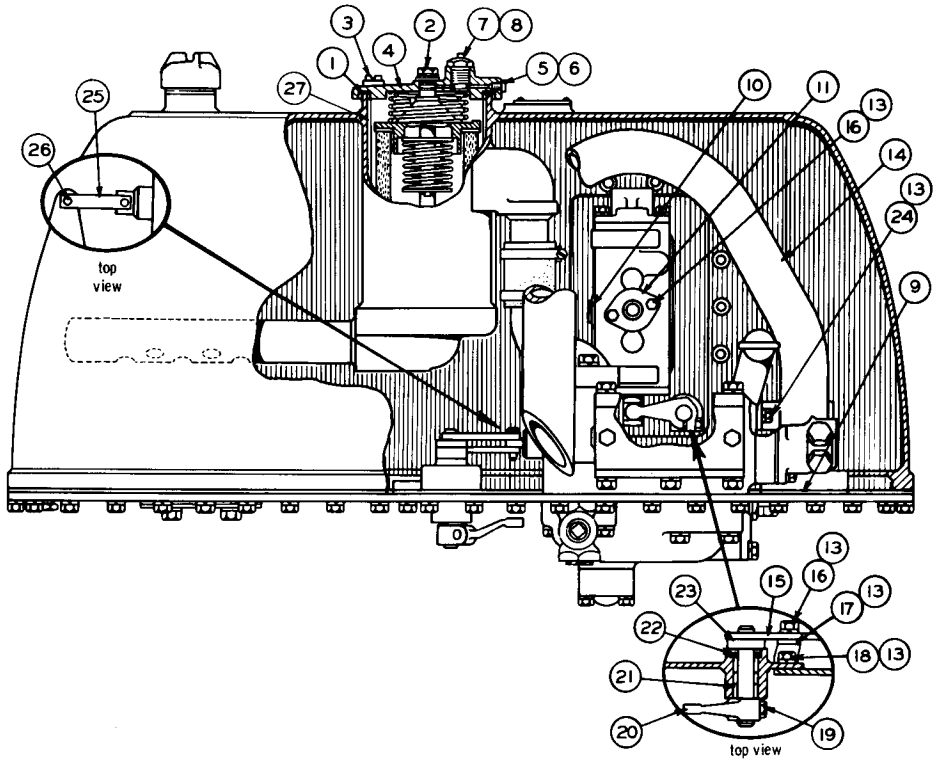

REF. NO.	PART NUMBER	DESCRIPTION	QTY
1	4K1557	GASKET	1
2	7J5581	BOLT	1
	6F4855	SEAL	2
3	2J2864	PLUG	1
	6F5559	SEAL	1
4	6J3953	COVER	1
5	9S8001	PLUG	1
6	4J7533	SEAL	1
7	6J468	INDICATOR ASSEM.	1
8	2M9780	SEAL (Part of 6J468 Assem.)	1
9	3R2425	GASKET	1
10	9S8005	PLUG	1
	3K360	SEAL	1
11	8J1645	TUBE ASSEM.	1
13	3B4506	LOCKWASHER	7
14	6J1991	TUBE ASSEM.	1
15	5J3541	LEVER ASSEM.	1
16	S509	BOLT	3
17	6J1996	STRAP	1
	S1588	BOLT	1
18	L1351	BOLT	1
19	1A2209	BOLT	1
20	3J7582	LEVER	1
	1B8707	KEY	1
21	7F7983	BEARING	2
22	3J4407	SEAL	1
23	7M2360	WASHER	1
24	S1594	BOLT	1
25	7J2378	LINK	2
26	5F9199	PIN	2
	8S7803	RETAINER	2
	7H3912	BUSHING	1
27	7J9938	STRAINER ASSEM.	1

147898

5J3693 TANK AND VALVE GROUP—Right Hand Side View—Part 2 of 3—Type 2
183 & 193 Hydraulic Control Serial No. 27H7001—Up

5J3693 TANK AND VALVE GROUP—Right Hand Side View—Part 3 of 3—Type 2
183 & 193 Hydraulic Control Serial No. 27H7001—Up
5J3263, 5J3039 and 5J3067 Valve parts are shown on Pages 15B, 16A and 16C

REF NO	PART NUMBER	DESCRIPTION	QTY
1	4J6064	ELEMENT ASSEM.	1
2	5J2926	SPRING	1
3	5J1473	SEAT	1
4	2J198	VALVE	1
5	8J7240	HOUSING	1
6	2J8455	SPRING (Inner)	1
7	2J6114	SPRING (Outer)	1
8	4B4158	SCREW	2
9	2M6831	PLATE------(Serial Number)------	1
C 10	5P597	CLAMP	2
11	7J7678	HOSE-----85.85 mm(3.38 in.) long	1
12	7J2441	ELBOW	1
13	S1587	BOLT	2
14	3B4508	LOCKWASHER	2
15	1H1200	PIN	1
16	2J917	RETAINER	1
17	1H9696	SEAL	3
18	7J2772	TANK ASSEM.	1
	5J96	STUD	4
	2J2411	BLOCK	1
19	6J2237	BOSS	18
20	6J1053	GASKET	1
21	8J9260	PLATE	1
22	5J3039	CONTROL VALVE GROUP (Separate Illustration)	1
23	5J3263	RELIEF VALVE GROUP (Separate Illustration)	1
24	5J3200	LEVER	1
	1B8706	KEY	1
25	1A2029	BOLT	4
	3B4506	LOCKWASHER	8
26	S1588	BOLT	5
C 27	5J3067	CONTROL VALVE GROUP (Separate Illustration)	1
28	7J2852	COVER	1
29	4J8425	GASKET	1
30	3J9298	COVER	2
31	3J9297	COVER	2
32	S1585	BOLT	4
	1K4703	WASHER ( )	4
	5K5180	WASHER ( )	4
33	2J7606	GASKET	2
34	3J4407	SEAL	1
35	8B4037	WASHER	1
36	7F7983	BEARING	2
37	5J3117	LEVER ASSEM.	1
38	2H5746	ADAPTER	1
39	5L5840	WASHER-12.83 mm(.505 in.) thick	1
	5B9628	WASHER-1.66 mm(.0650 in.) thick	1
40	S1594	BOLT	1

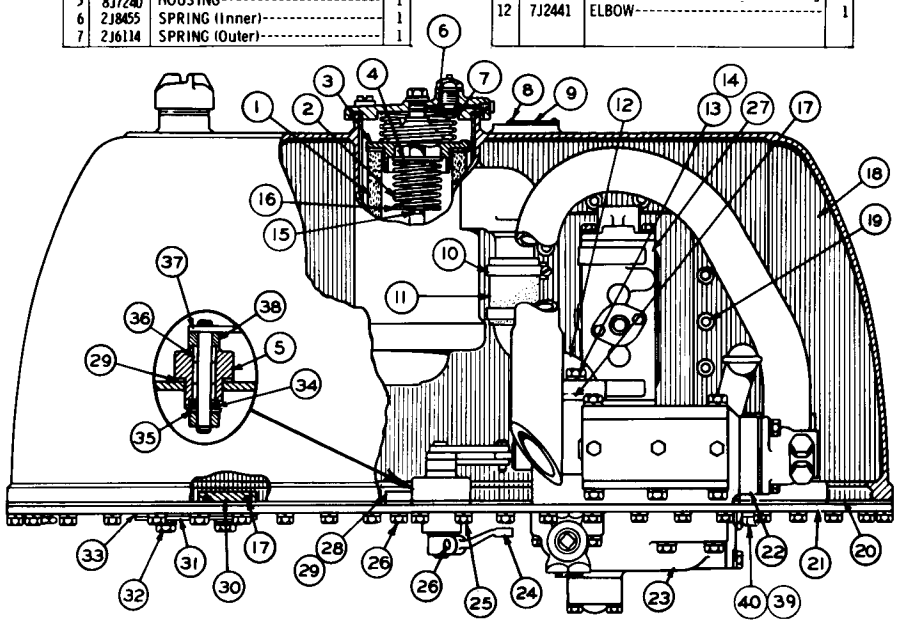

C INDICATES CHANGE

162389

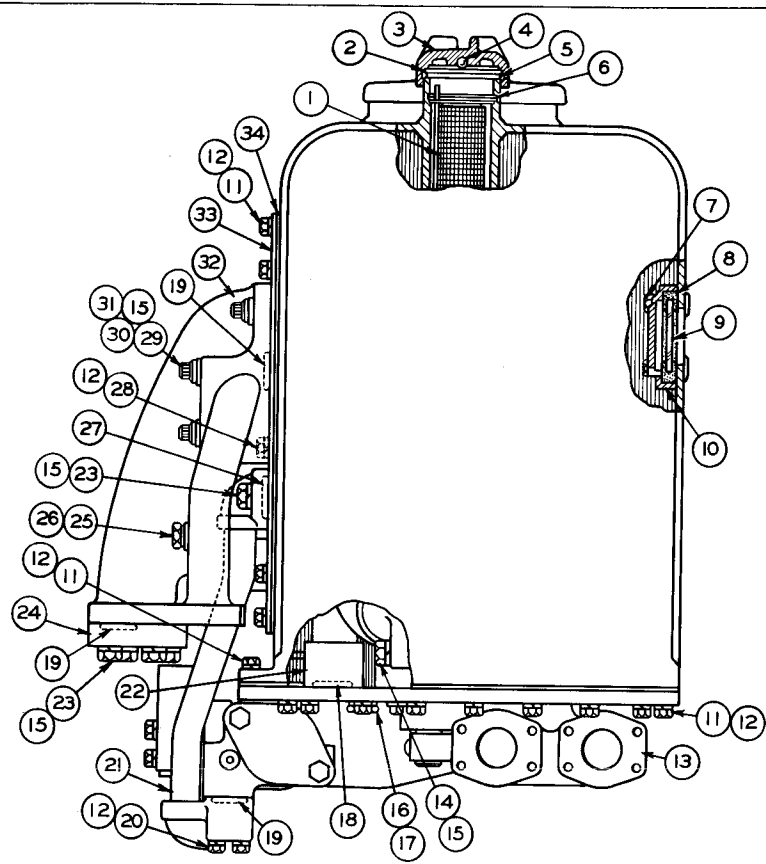

REF NO	PART NUMBER	DESCRIPTION	QTY
1	2J2521	STRAINER ASSEM.	1
2	6H5139	PLATE	1
3	7H1447	CAP	1
4	7B6368	BALL	1
5	9H6454	GASKET	1
6	6H9361	RING	1
7	4J8265	NUT	4
8	4J8251	GROMMET	1
9	4J8252	GLASS	1
10	4J8250	RETAINER	1
11	1A2029	BOLT	68
12	3B4506	LOCKWASHER	73
13	5J3136	MANIFOLD	1
14	3322-A	BOLT	2
15	3B4508	LOCKWASHER	14
16	7M5897	PLUG ASSEM.	1
17	2M9780	SEAL (Part of Plug Assem. 7M5897)	1
18	8F3469	SEAL	3
19	5J1584	SEAL	6
20	S-1590	BOLT	4
21	5J3480	TUBE ASSEM. (11.55" Long Overall) (5J3263 Valve to 5J3065 Cover Assem.)	1
22	5J2953	TUBE ASSEM. (16.65" Long Overall)	1
23	S-1585	BOLT	6
24	5J3545	COVER	1
25	5M7908	PLUG ASSEM.	1
26	3J1907	SEAL (Part of Plug Assem. 5M7908)	1
27	5J1356	SEAL	1
28	L-1351	BOLT	1
29	5J5793	BOLT (2" Long)	1
30	5J5794	BOLT (3.5" Long)	2
31	4K5175	BOLT (1.5" Long)	3
32	5J3449	MANIFOLD	1
33	5J3065	COVER ASSEM.	1
34	5J3140	GASKET	1

76567

5J3691 TANK AND VALVE GROUP—As Viewed from Rear of Tractor—Part 1 of 3
183 & 193 Hydraulic Controls Serial No. 28H1 to 28H385 inclusive
8S9785 Complete Gasket Kit is available

5J3691 TANK AND VALVE GROUP—As Viewed from Right Hand Side of Tractor—Part 2 of 3
183 & 193 Hydraulic Controls Serial No. 28H1 to 28H385 inclusive
5J3067 & 5J2956 Valve parts are shown on Pages 16B & 18

REF NO	PART NUMBER	DESCRIPTION	QTY
1	4K1557	GASKET	1
2	6F4855	SEAL	1
3	5J1179	BOLT ASSEM.	1
4	3B9363	WASHER	1
5	2J2864	PLUG	2

REF NO	PART NUMBER	DESCRIPTION	QTY
6	6F5559	SEAL	2
7	4K1498	COVER	1
8	1H8720	SEAL	1
9	S-1587	BOLT	2

REF NO	PART NUMBER	DESCRIPTION	QTY
10	3B4508	LOCKWASHER	8
11	5J2978	TUBE ASSEM. (2.55" Long Overall)	1
12	5J3067	CONTROL VALVE GROUP (See Separate Illustration)	1
13	3J2493	PLUG ASSEM.	1
14	3K360	SEAL (Part of Plug Assem. 3J2493)	1
15	5J2910	TUBE ASSEM. (7.00" Long Overall)	1
16	S-1591	BOLT	2
17	3B4506	LOCKWASHER	13
18	3J4407	SEAL	2
19	5J3541	LEVER ASSEM.	1
20	S-509	BOLT	1
21	5J4448	STRAP	1
22	S-1588	BOLT	1
23	L-1351	BOLT	1
24	1A2209	BOLT	1
25	3J7582	LEVER	1
26	1B8707	KEY	1
27	7F7983	BEARING	4
28	7M2360	SPACER	1
29	5J2871	TUBE ASSEM. (23.45" Long Overall) (5J2956 Valve to Oil Filter)	1
30	1A2029	BOLT	8
31	4K1064	ROD	1
32	2H5746	ADAPTER	1
33	8B4037	WASHER	2
34	5J880	HOUSING	1
35	4J8425	GASKET	1
36	5J3897	LEVER ASSEM.	1
37	3322-A	BOLT	4
38	5J1357	SEAL	2
39	4K1272	SPACER	1
40	5J2956	VALVE GROUP(Control) (See Separate Illustration)	1
41	4J523	SEAL	1
42	V-375	BOLT	2
43	5J2837	TUBE ASSEM. (24.56" Long Overall) (5J2956 Valve to 5J3039 Valve)	1

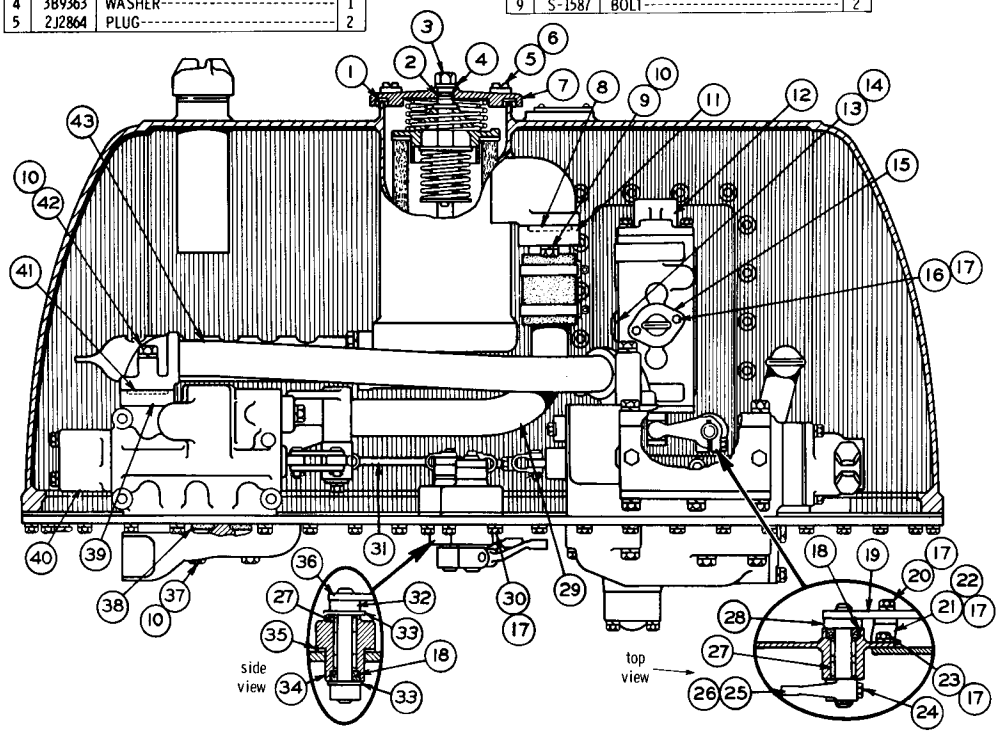

76568

REF NO	PART NUMBER	DESCRIPTION	QTY
1	2J917	RETAINER	1
2	4J6064	ELEMENT ASSEM.	1
3	5J1473	SEAT ASSEM.	1
4	2J918	VALVE	1

REF NO	PART NUMBER	DESCRIPTION	QTY
5	2J8455	SPRING (Inner)	1
6	3F566	WASHER	1
7	2J6114	SPRING (Outer)	1
8	5J1283	SPRING	1
9	3B5301	COTTER PIN	1

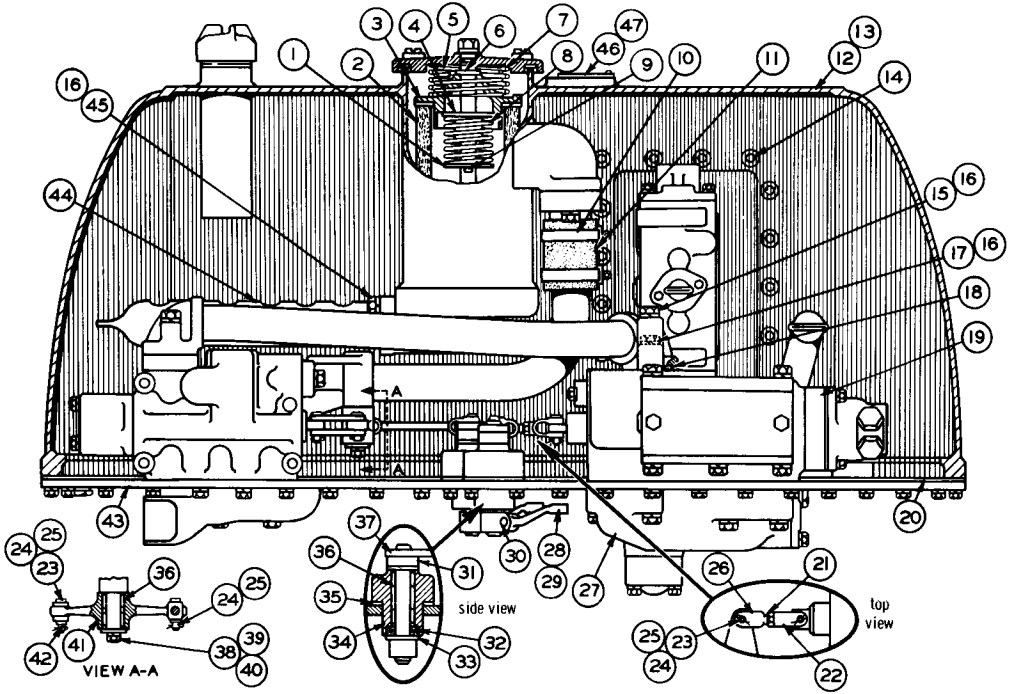

REF NO	PART NUMBER	DESCRIPTION	QTY
10	2J6540	CLAMP	2
11	4J7313	HOSE (3.38" Long)	1
12	5J2862	TANK ASSEM.	1
13	5J96	STUD	4
14	8M5362	BOSS	18
		(Parts of Tank Assem. 5J2862)	
15	1D4566	BOLT	1
16	3B4508	LOCKWASHER	6
17	1A1460	BOLT	1
18	4J523	SEAL	1
19	5J3039	CONTROL VALVE GROUP	1
		(See Separate Illustration)	
20	5J3112	GASKET	1
21	5B9079	NUT	1
22	4J8922	END	1
23	1J4384	PIN	6
24	3B4615	COTTER PIN	6
25	7H3912	BUSHING	4
26	1J8490	ROD	1
27	5J3263	RELIEF VALVE GROUP	1
		(See Separate Illustration)	
28	5J3200	LEVER	2
29	1B8706	KEY	2
30	S-1588	BOLT	2
31	2H5746	ADAPTER	1
32	3J4407	SEAL	1
33	8B4037	WASHER	1
34	5J880	HOUSING	1
35	4J8425	GASKET	1
36	7F7983	BEARING	4
37	5J3117	LEVER ASSEM.	1
38	S-509	BOLT	1
39	3B4506	LOCKWASHER	1
40	3F1417	WASHER	1
41	5J2979	LEVER	1
42	1J4603	LINK	2
43	5J3090	PLATE	1
44	5J2886	TUBE ASSEM. (14.18" long overall)	1
45	S-1585	BOLT	4
46	2M6831	PLATE (Serial Number)	1
47	4B9158	SCREW	2

77081

5J3691 TANK AND VALVE GROUP—As Viewed from Right Hand Side of Tractor—Part 3 of 3
183 & 193 Hydraulic Controls Serial No. 28H1 to 28H385 inclusive
5J3263 & 5J3039 Valve parts are shown on Pages 15 & 16

5J3691 TANK AND VALVE GROUP—As Viewed from Rear of Tractor—Part 1 of 3
183 & 193 Hydraulic Controls Serial No. 28H386 to 28H871 inclusive
8S9785 Complete Gasket Kit is available

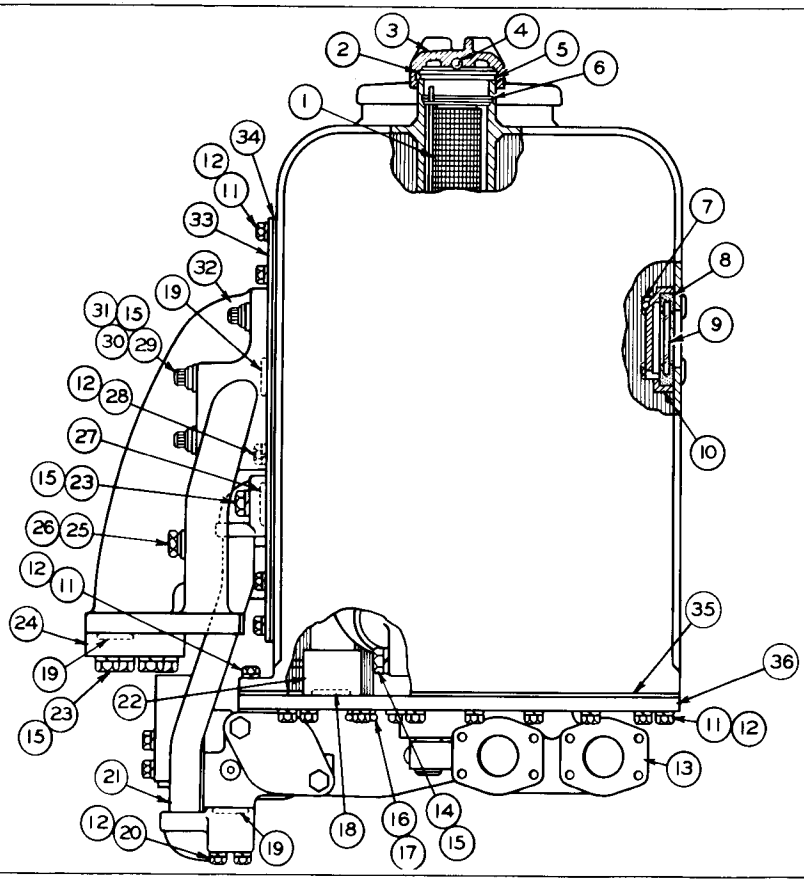

REF NO	PART NUMBER	DESCRIPTION	QTY
1	2J2521	STRAINER ASSEM.	1
2	6H5139	PLATE	1
3	7H1447	CAP	1
4	7B6368	BALL	1
5	9H6454	GASKET	1
6	6H9361	RING	1
7	4J8265	NUT	4
8	4J8251	GROMMET	1
9	4J8252	GLASS	1
10	4J8250	RETAINER	1
11	1A2029	BOLT	68
12	3B4506	LOCKWASHER	73
13	5J3136	MANIFOLD	1
14	3322-A	BOLT	2
15	3B4508	LOCKWASHER	14
16	7M5897	PLUG ASSEM.	1
17	2M9780	SEAL (Part of 7M5897 Plug Assem.)	1
18	8F3469	SEAL	3
19	5J1584	SEAL	6
20	S-1590	BOLT	4
21	5J3480	TUBE ASSEM. (11.55" Long Overall)	1
22	5J2953	TUBE ASSEM. (16.65" Long Overall)	1
23	S-1585	BOLT	6
24	5J3545	COVER	1
25	5M7908	PLUG ASSEM.	1
26	3J1907	SEAL (Part of 5M7908 Plug Assem.)	1
27	5J1356	SEAL	1
28	L-1351	BOLT	1
29	5J5793	BOLT—(2" Long)	1
30	5J5794	BOLT—(3.5" Long)	2
31	4K5175	BOLT—(1.5" Long)	3
32	5J3449	MANIFOLD	1
33	5J3065	COVER ASSEM.	1
34	5J3140	GASKET	1
35	5J3112	GASKET	1
36	5J3090	PLATE	1

96891

ONLY "CATERPILLAR" PARTS GIVE "CATERPILLAR" PERFORMANCE

REF NO	PART NUMBER	DESCRIPTION	QTY
1	4K1557	GASKET	1
2	6F4855	SEAL	1
3	5J1179	BOLT ASSEM.	1
4	3B9363	WASHER	1
5	2J2864	PLUG	2
6	6F5559	SEAL	2

REF NO	PART NUMBER	DESCRIPTION	QTY
7	4K1498	COVER	1
8	1H8720	SEAL	1
9	S-1587	BOLT	2
10	3B4508	LOCKWASHER	6

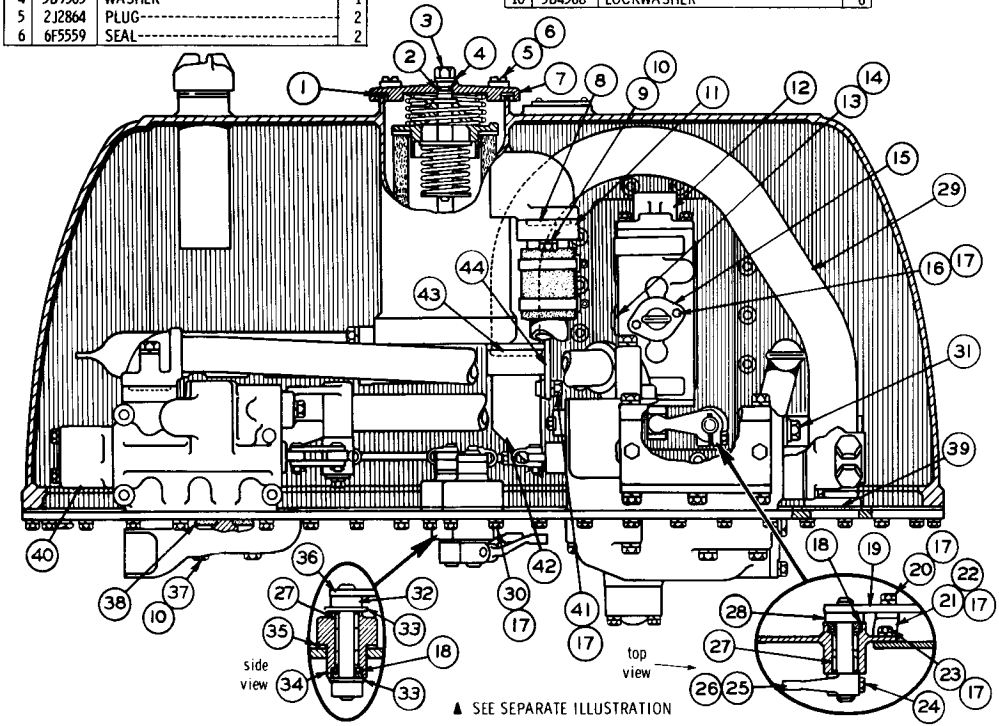

REF NO	PART NUMBER	DESCRIPTION	QTY
11	5J2978	TUBE ASSEM. -(2.55" Long Overall)-	1
12	▲5J3067	CONTROL VALVE GROUP	1
13	3J2493	PLUG ASSEM.	1
14	3K360	SEAL (Part of 3J2493 Plug Assem.)	1
15	5J2910	TUBE ASSEM. -(7.00" Long Overall)-	1
16	S-1591	BOLT	2
17	3B4506	LOCKWASHER	15
18	3J4407	SEAL	2
19	5J3541	LEVER ASSEM.	1
20	S-509	BOLT	1
21	5J9123	STRAP	1
22	S-1588	BOLT	1
23	L-1351	BOLT	1
24	1A2209	BOLT	1
25	3J7582	LEVER	1
26	1B8707	KEY	1
27	7F7983	BEARING	4
28	7M2360	SPACER	1
29	5J9749	TUBE ASSEM.	1
	9F2978	NUT-----(Weld)----- (Part of 5J9749 Tube Assem.)	1
30	1A2029	BOLT	8
31	T-772	BOLT	1
	1K4703	WASHER	1
32	2H5746	ADAPTER	1
33	8B4037	WASHER	2
34	5J880	HOUSING	1
35	4J8425	GASKET	1
36	5J3897	LEVER ASSEM.	1
37	3322-A	BOLT	4
38	5J1357	SEAL	2
39	3H2652	SEAL	1
40	▲5J2956	CONTROL VALVE GROUP	1
41	S-1594	BOLT	2
42	5J9750	TUBE ASSEM.	1
	9F2978	NUT-----(Weld)----- (Part of 5J9750 Tube Assem.)	1
43	8F6711	SEAL	1
44	5J9746	BRACKET	1

121042

5J3691 TANK AND VALVE GROUP—As Viewed from Right Hand Side of Tractor—Part 2 of 3
183 & 193 Hydraulic Controls Serial No. 28H386 to 28H871 inclusive
5J3067 & 5J2956 Valve parts are shown on Pages 16B & 18

5J3691 TANK AND VALVE GROUP—As Viewed from Right Hand Side of Tractor—Part 3 of 3

183 & 193 Hydraulic Controls Serial No. 28H386 to 28H871 inclusive

5J3263 & 5J3039 Valve parts are shown on Pages 15 & 16

REF NO	PART NUMBER	DESCRIPTION	QTY
1	2J917	RETAINER	1
2	4J6064	ELEMENT ASSEM. (Disposable)	1
3	5J1473	SEAT ASSEM.	1
4	2J918	VALVE	1
5	2J8455	SPRING (Inner)	1

REF NO	PART NUMBER	DESCRIPTION	QTY
6	3F566	WASHER	1
2	2J6114	SPRING (Outer)	1
8	5J1283	SPRING	1
9	3B5301	COTTER PIN	1
10	2J6540	CLAMP	2

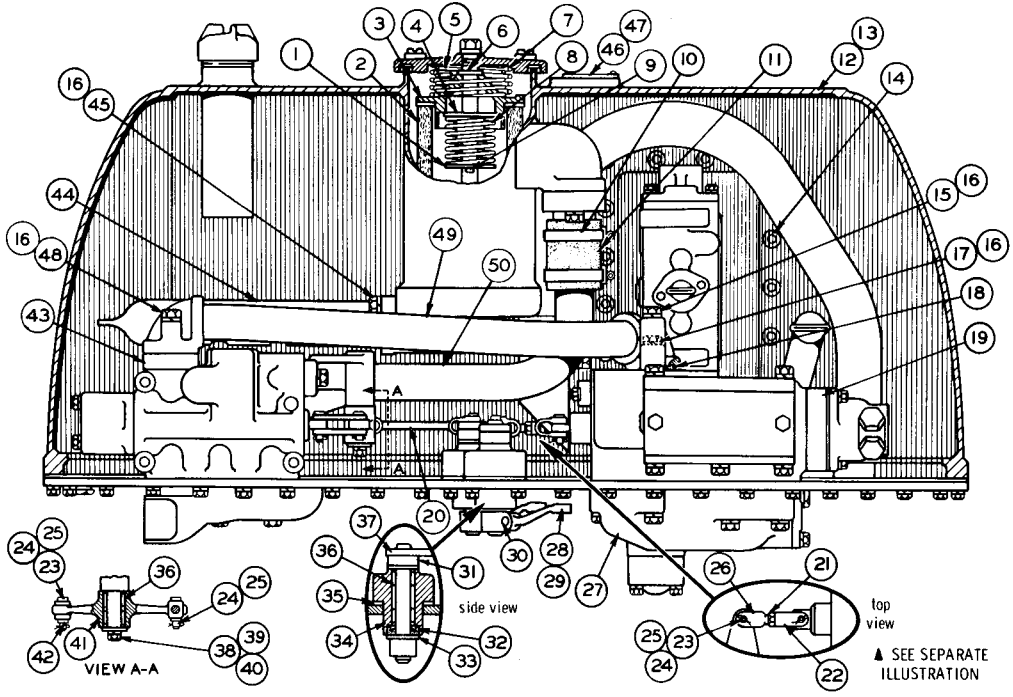

REF NO	PART NUMBER	DESCRIPTION	QTY
11	4J7313	HOSE (3.38" Long)	1
12	5J2862	TANK ASSEM.	1
13	5J96	STUD	4
14	6J2237	BOSS	18
		(Parts of 5J2862 Tank Assem.)	
15	1D4566	BOLT	1
16	3B4508	LOCKWASHER	8
17	1A1460	BOLT	1
18	4J523	SEAL	2
19	▲5J3039	CONTROL VALVE GROUP	1
20	4K1064	ROD	1
21	5B9079	NUT	1
22	4J8922	END	1
23	1J4384	PIN	6
24	3B4615	COTTER PIN	6
25	7H3912	BUSHING	4
26	1J8490	ROD	1
27	▲5J3263	RELIEF VALVE GROUP	1
28	5J3200	LEVER	2
29	1B8706	KEY	2
30	S-1588	BOLT	2
31	2H5746	ADAPTER	1
32	3J4407	SEAL	1
33	8B4037	WASHER	1
34	5J880	HOUSING	1
35	4J8425	GASKET	1
36	7F7983	BEARING	4
37	5J3117	LEVER ASSEM.	1
38	S-509	BOLT	1
39	3B4506	LOCKWASHER	1
40	3F1417	WASHER	1
41	5J2979	LEVER	1
42	1J4603	LINK	2
43	4K1272	SPACER	1
44	5J2886	TUBE ASSEM. (14.18" Long Overall)	1
45	S-1585	BOLT	4
46	2M6831	PLATE (Serial Number)	1
47	4B9158	SCREW	2
48	V-375	BOLT	2
49	5J2837	TUBE ASSEM. (24.56" Long Overall)	1
50	5J2871	TUBE ASSEM. (23.45" Long Overall)	1

98258

ONLY "CATERPILLAR" PARTS GIVE "CATERPILLAR" PERFORMANCE

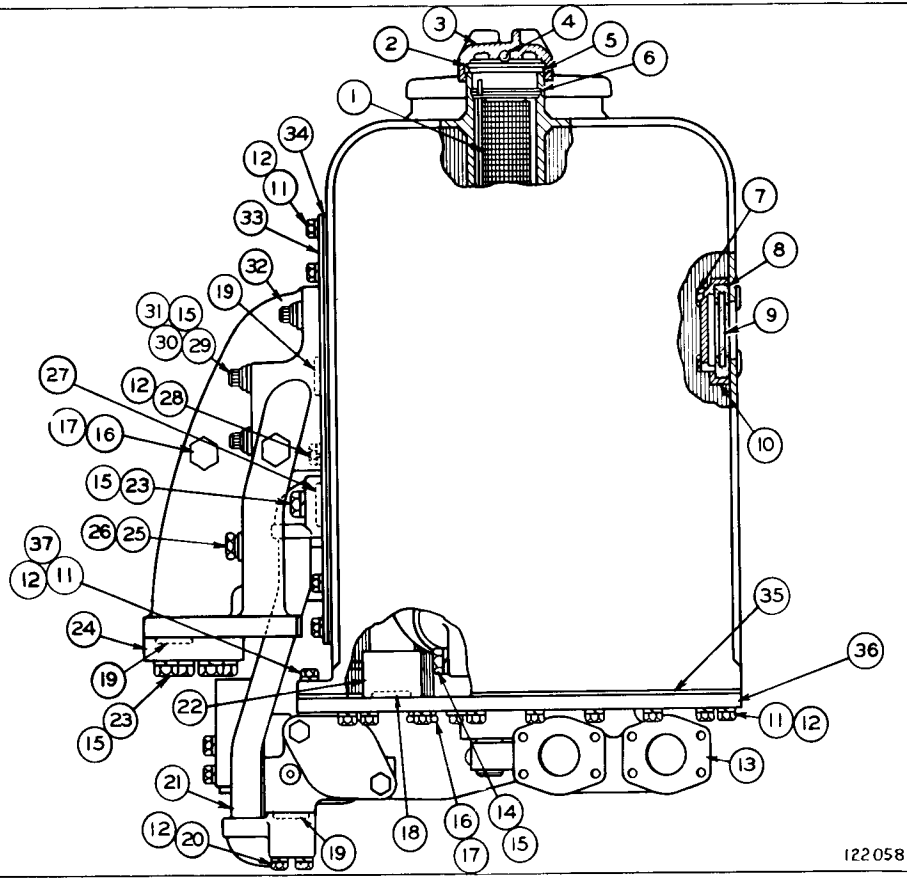

REF NO	PART NUMBER	DESCRIPTION	QTY
1	2J2521	STRAINER ASSEM.	1
2	6H5139	PLATE	1
3	7H1447	CAP	1
4	7B6368	BALL	1
5	9H6454	GASKET	1
6	6H9361	RING	1
7	4J8265	NUT	4
8	4J8251	GROMMET	1
9	4J8252	GLASS	1
10	4J8250	RETAINER	1
11	1A2029	BOLT	68
12	3B4506	LOCKWASHER	73
13	5J3136	MANIFOLD	1
14	3322-A	BOLT	2
15	3B4508	LOCKWASHER	14
16	7M5897	PLUG ASSEM.	3
17	2M9780	SEAL (1 in each 7M5897 Plug Assem.)	3
18	8F3469	SEAL	3
19	5J1584	SEAL	6
20	S-1590	BOLT	4
21	5J3480	TUBE ASSEM. (11.55" Long Overall)	1
22	5J2953	TUBE ASSEM. (16.65" Long Overall)	1
23	S-1585	BOLT	6
24	5J3545	COVER	1
25	5M7908	PLUG ASSEM.	1
26	3J1907	SEAL (Part of 5M7908 Plug Assem.)	1
27	5J1356	SEAL	1
28	L-1351	BOLT	1
29	5J5793	BOLT---(2" Long)	1
30	5J5794	BOLT---(3.5" Long)	2
31	4K5175	BOLT---(1.5" Long)	3
32	5J9930	MANIFOLD	1
33	5J3065	COVER ASSEM.	1
34	5J3140	GASKET	1
35	5J3112	GASKET	1
36	5J3090	PLATE	1
37	4B4278	WASHER	8

5J3691 TANK AND VALVE GROUP—As Viewed from Rear of Tractor—Part 1 of 3
183 & 193 Hydraulic Controls Serial No. 28H872 to 28H4281 inclusive
8S9785 Complete Gasket Kit is available

5J3691 TANK AND VALVE GROUP—As Viewed from Right Hand Side of Tractor—Part 2 of 3
183 & 193 Hydraulic Controls Serial No. 28H872 to 28H4281 inclusive
5J3067 & 5J2956 Valve parts are shown on Pages 16B & 18

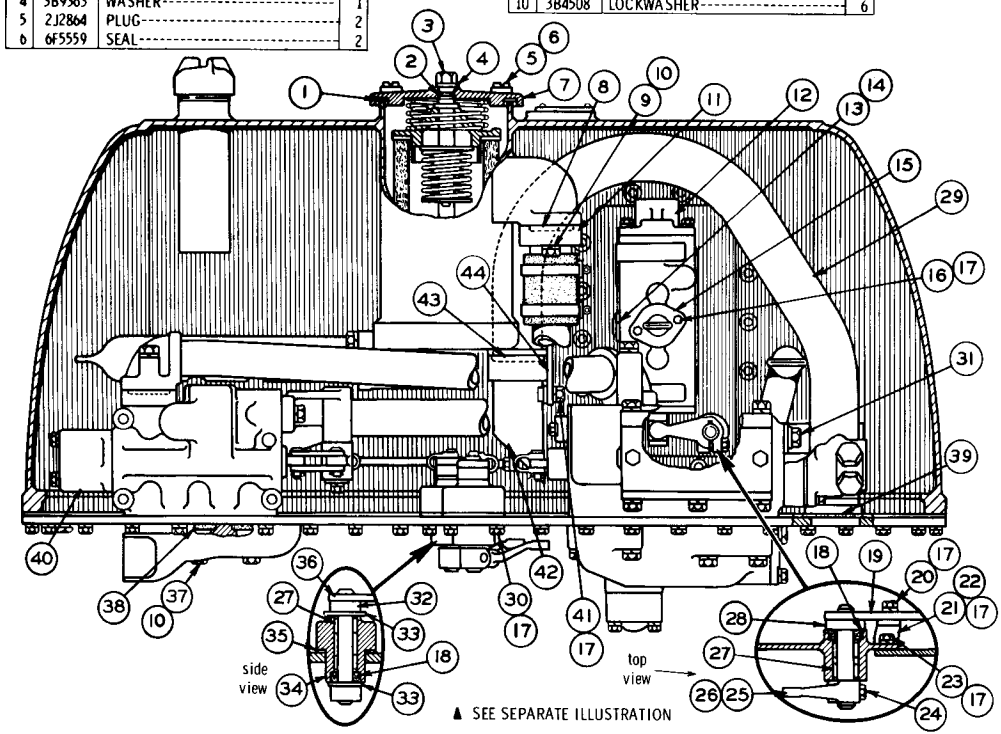

REF NO	PART NUMBER	DESCRIPTION	QTY
1	4K1557	GASKET	1
2	6F4855	SEAL	1
3	5J1179	BOLT ASSEM.	1
4	3B9363	WASHER	1
5	2J2864	PLUG	2
6	6F5559	SEAL	2

REF NO	PART NUMBER	DESCRIPTION	QTY
7	4K1498	COVER	1
8	1H8720	SEAL	1
9	S-1587	BOLT	2
10	3B4508	LOCKWASHER	6

REF NO	PART NUMBER	DESCRIPTION	QTY
11	5J2978	TUBE ASSEM. -(2.55" Long Overall)-	1
12	▲5J3067	CONTROL VALVE GROUP	1
13	3J2493	PLUG ASSEM.	1
14	3K360	SEAL (Part of 3J2493 Plug Assem.)	1
15	5J2910	TUBE ASSEM. -(7.00" Long Overall)-	1
16	S-1591	BOLT	2
17	3B4506	LOCKWASHER	15
18	3J4407	SEAL	2
19	5J3541	LEVER ASSEM.	1
20	S-509	BOLT	1
21	5J9123	STRAP	1
22	S-1588	BOLT	1
23	L-1351	BOLT	1
24	1A2209	BOLT	1
25	3J7582	LEVER	1
26	1B8707	KEY	1
27	7F7983	BEARING	4
28	7M2360	SPACER	1
29	5J9749	TUBE ASSEM.	1
	9F2978	NUT—(Weld) (Part of 5J9749 Tube Assem.)	1
30	1A2029	BOLT	8
31	T-772	BOLT	1
	1K4703	WASHER	1
32	2H5746	ADAPTER	1
33	8B4037	WASHER	2
34	5J880	HOUSING	1
35	4J8425	GASKET	1
36	5J3897	LEVER ASSEM.	1
37	3322-A	BOLT	4
38	5J1357	SEAL	2
39	3H2652	SEAL	1
40	▲5J2956	CONTROL VALVE GROUP	1
41	S-1594	BOLT	2
42	5J9750	TUBE ASSEM.	1
	9F2978	NUT—(Weld) (Part of 5J9750 Tube Assem.)	1
43	8F6711	SEAL	1
44	5J9746	BRACKET	1

121042

ONLY "CATERPILLAR" PARTS GIVE "CATERPILLAR" PERFORMANCE

REF NO	PART NUMBER	DESCRIPTION	QTY
1	2J917	RETAINER	1
2	4J6064	ELEMENT ASSEM. (Disposable)	1
3	5J1473	SEAT ASSEM.	1
4	2J918	VALVE	1
5	2J8455	SPRING (Inner)	1

REF NO	PART NUMBER	DESCRIPTION	QTY
6	3F566	WASHER	1
2	2J6114	SPRING (Outer)	1
8	5J1283	SPRING	1
9	3B5301	COTTER PIN	1
10	2J6540	CLAMP	2

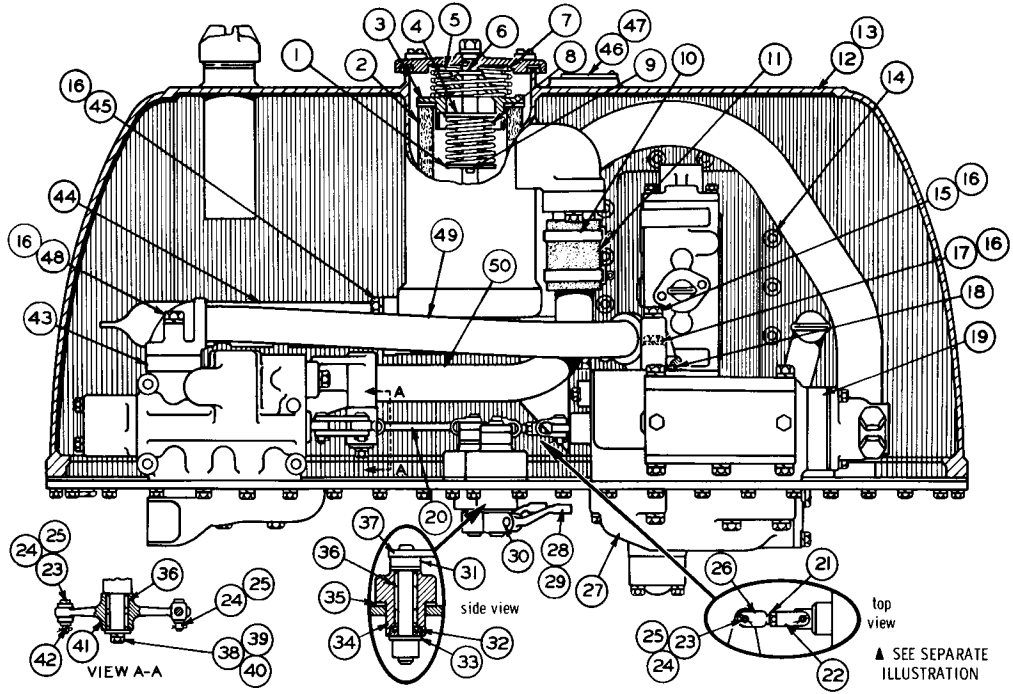

REF NO	PART NUMBER	DESCRIPTION	QTY
11	4J7313	HOSE (3.38" Long)	1
12	5J2862	TANK ASSEM.	1
13	5J96	STUD	4
14	6J2237	BOSS	18
		(Parts of 5J2862 Tank Assem.)	
15	1D4566	BOLT	1
16	3B4508	LOCKWASHER	8
17	1A1460	BOLT	1
18	4J523	SEAL	2
19	▲5J3039	CONTROL VALVE GROUP	1
20	4K1064	ROD	1
21	5B9079	NUT	1
22	4J8922	END	1
23	1J4384	PIN	6
24	3B4615	COTTER PIN	6
25	7H3912	BUSHING	4
26	1J8490	ROD	1
27	▲5J3263	RELIEF VALVE GROUP	1
28	5J3200	LEVER	2
29	1B8706	KEY	2
30	S-1588	BOLT	2
31	2H5746	ADAPTER	1
32	3J4407	SEAL	1
33	8B4037	WASHER	1
34	5J880	HOUSING	1
35	4J8425	GASKET	1
36	7F7983	BEARING	4
37	5J3117	LEVER ASSEM.	1
38	S-509	BOLT	1
39	3B4506	LOCKWASHER	1
40	3F1417	WASHER	1
41	5J2979	LEVER	1
42	1J4603	LINK	2
43	4K1272	SPACER	1
44	5J2886	TUBE ASSEM. (14, 18" Long Overall)	1
45	S-1585	BOLT	4
46	2M6831	PLATE (Serial Number)	1
47	4B9158	SCREW	2
48	V-375	BOLT	2
49	5J2837	TUBE ASSEM. (24, 56" Long Overall)	1
50	5J2871	TUBE ASSEM. (23, 45" Long Overall)	1

98258

5J3691 TANK AND VALVE GROUP—As Viewed from Right Hand Side of Tractor—Part 3 of 3
183 & 193 Hydraulic Controls Serial No. 28H872 to 28H4281 inclusive
5J3263 & 5J3039 Valve parts are shown on Pages 15 & 16

5J3691 TANK AND VALVE GROUP—As Viewed from Rear of Tractor—Part 1 of 3
183 & 193 Hydraulic Controls Serial No. 28H4282 to 28H5399 inclusive
8S9785 Complete Gasket Kit is available

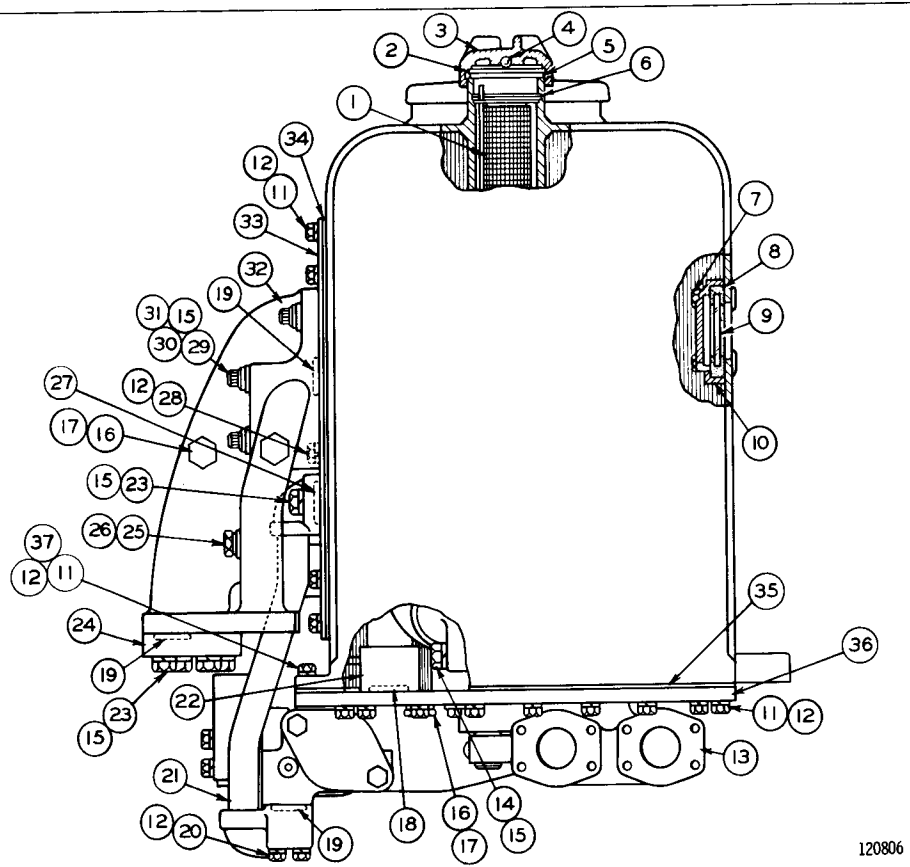

REF NO	PART NUMBER	DESCRIPTION	QTY
1	2J2521	STRAINER ASSEM.	1
2	6H5139	PLATE	1
3	7H1447	CAP	1
4	7B6368	BALL	1
5	9H6454	GASKET	1
6	6H9361	RING	1
7	4J8265	NUT	4
8	4J8251	GROMMET	1
9	4J8252	GLASS	1
10	4J8250	RETAINER	1
11	1A2029	BOLT	68
12	3B4506	LOCKWASHER	73
13	5J3136	MANIFOLD	1
14	3322-A	BOLT	2
15	3B4508	LOCKWASHER	14
16	7M5897	PLUG ASSEM.	3
17	2M9780	SEAL (1 in each 7M5897 Plug Assem.)	3
18	8F3469	SEAL	2
19	5J1584	SEAL	6
20	S-1590	BOLT	4
21	5J3480	TUBE ASSEM. (11.55" Long Overall)	1
22	6J1942	TUBE ASSEM. (15.77" Long Overall)	1
23	S-1585	BOLT	6
24	5J3545	COVER	1
25	5M7908	PLUG ASSEM.	1
26	3J1907	SEAL (Part of 5M7908 Plug Assem.)	1
27	5J1356	SEAL	1
28	L-1351	BOLT	1
29	5J5793	BOLT—(2" Long)	1
30	5J5794	BOLT—(3.5" Long)	2
31	4K5175	BOLT—(1.5" Long)	3
32	5J9930	MANIFOLD	1
33	6J1029	COVER ASSEM.	1
34	5J3140	GASKET	1
35	6J1053	GASKET	1
36	6J1054	PLATE	1
37	4B4278	WASHER	8

ONLY "CATERPILLAR" PARTS GIVE "CATERPILLAR" PERFORMANCE

REF NO	PART NUMBER	DESCRIPTION	QTY
1	4K1557	GASKET	1
2	6F4855	SEAL	1
3	5J1179	BOLT ASSEM.	1
4	3B9363	WASHER	1
5	2J2864	PLUG	2
6	6F5559	SEAL	2
7	4K1498	COVER	1
8	1H8720	SEAL	1
9	S-1587	BOLT	2
10	3B4508	LOCKWASHER	6
11	5J2978	TUBE ASSEM. --(2.55" long overall)	1
12	5J3067	CONTROL VALVE GROUP (See Separate Illustration)	1
13	3J2493	PLUG ASSEM.	1
14	3K360	SEAL (Part of 3J2493 Plug Assem.)	1
15	5J2910	TUBE ASSEM. --(7.00" long overall)	1
16	S-1591	BOLT	2
17	3B4506	LOCKWASHER	14
18	3J4407	SEAL	2
19	5J3541	LEVER ASSEM.	1
20	S-509	BOLT	1
21	6J1996	STRAP	1
22	S-1588	BOLT	1
23	L-1351	BOLT	1
24	1A2209	BOLT	1
25	3J7582	LEVER	1
26	1B8707	KEY	1
27	7F7983	BEARING	4
28	7M2360	SPACER	1
29	6J1991	TUBE ASSEM. -(39.19" long overall)	1
30	1A2029	BOLT	8
31	4J7313	HOSE --------(3.38" Long)	1
	2J6540	CLAMP	2
32	2H5746	ADAPTER	1
33	8B4037	WASHER	2
34	5J880	HOUSING	1
35	4J8425	GASKET	1
36	5J3897	LEVER ASSEM.	1
37	3322-A	BOLT	4
38	5J1357	SEAL	2
39	3R2425	GASKET	1
40	5J2956	CONTROL VALVE GROUP (See Separate Illustration)	1
41	S-1594	BOLT	1

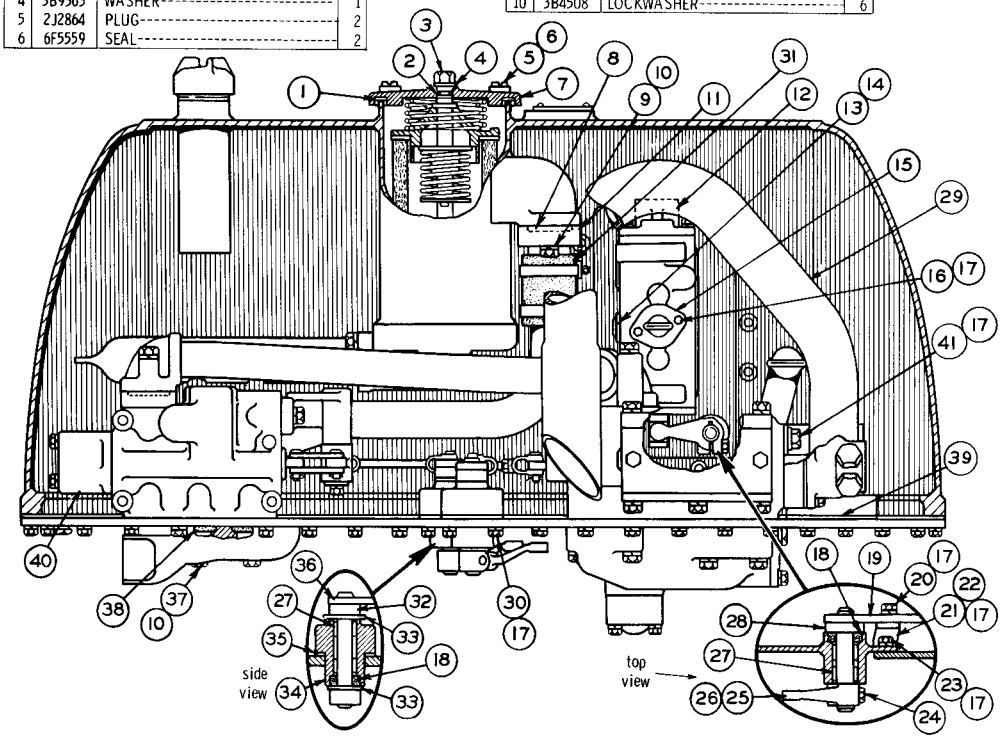

5J3691 TANK AND VALVE GROUP—As Viewed from Right Hand Side of Tractor—Part 2 of 3
183 & 193 Hydraulic Controls Serial No. 28H4282 to 28H5399 inclusive
5J3067 & 5J2956 Valve parts are shown on Pages 16B & 18

5J3691 TANK AND VALVE GROUP—As Viewed from Right Hand Side of Tractor—Part 3 of 3
183 & 193 Hydraulic Controls Serial No. 28H4282 to 28H5399 inclusive
5J3263 & 5J3039 Valve parts are shown on Pages 15 & 16

REF NO	PART NUMBER	DESCRIPTION	QTY
1	2J917	RETAINER	1
2	4J6064	ELEMENT ASSEM. (Disposable)	1
3	5J1473	SEAT ASSEM.	1
4	2J918	VALVE	1
5	2J8455	SPRING (Inner)	1

REF NO	PART NUMBER	DESCRIPTION	QTY
6	3F566	WASHER	1
7	2J6114	SPRING (Outer)	1
8	5J1283	SPRING	1
9	3B5301	COTTER PIN	1
10	5J2871	TUBE ASSEM. -(23.45" long overall)-	1

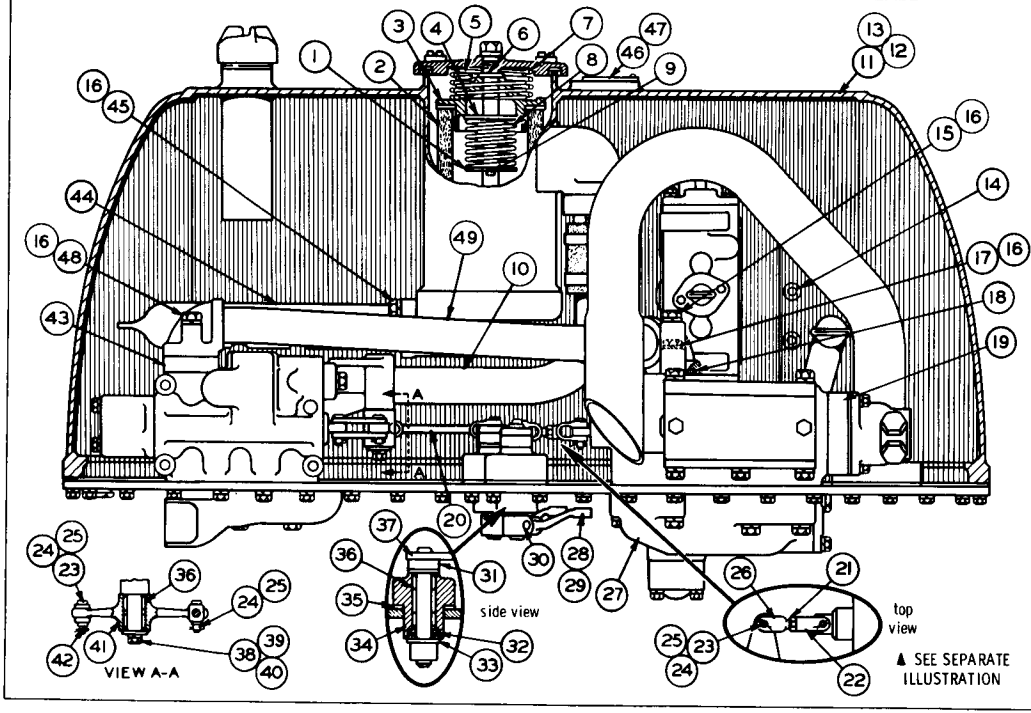

REF NO	PART NUMBER	DESCRIPTION	QTY
11	6J1055	TANK ASSEM.	1
12	2J2411	BLOCK	1
13	5J96	STUD	4
14	6J2237	BOSS	18
		(Parts of 6J1055 Tank Assem.)	
15	1D4566	BOLT	1
16	3B4508	LOCKWASHER	8
17	1A1460	BOLT	1
18	4J523	SEAL	2
19	▲5J3039	CONTROL VALVE GROUP	1
20	4K1064	ROD	1
21	5B9079	NUT	1
22	4J8922	END	1
23	1J4384	PIN	6
24	3B4615	COTTER PIN	6
25	7H3912	BUSHING	4
26	1J8490	ROD	1
27	▲5J3263	RELIEF VALVE GROUP	1
28	5J3200	LEVER	2
29	1B8706	KEY	2
30	S-1588	BOLT	2
31	2H5746	ADAPTER	1
32	3J4407	SEAL	1
33	8B4037	WASHER	1
34	5J880	HOUSING	1
35	4J8425	GASKET	1
36	7F7983	BEARING	4
37	5J3117	LEVER ASSEM.	1
38	S-509	BOLT	1
39	3B4506	LOCKWASHER	3
40	3F1417	WASHER	1
41	5J2979	LEVER	1
42	1J4603	LINK	2
43	4K1272	SPACER	1
44	5J2886	TUBE ASSEM. (14.18" Long Overall)	1
45	S-1585	BOLT	4
46	2M6831	PLATE (Serial Number)	1
47	4B9158	SCREW	2
48	V-375	BOLT	2
49	6J1930	TUBE ASSEM. (22.55" Long Overall)	1

120808

ONLY "CATERPILLAR" PARTS GIVE "CATERPILLAR" PERFORMANCE

REF NO	PART NUMBER	DESCRIPTION	QTY
1	2J2521	STRAINER ASSEM.	1
2	6H5139	PLATE	1

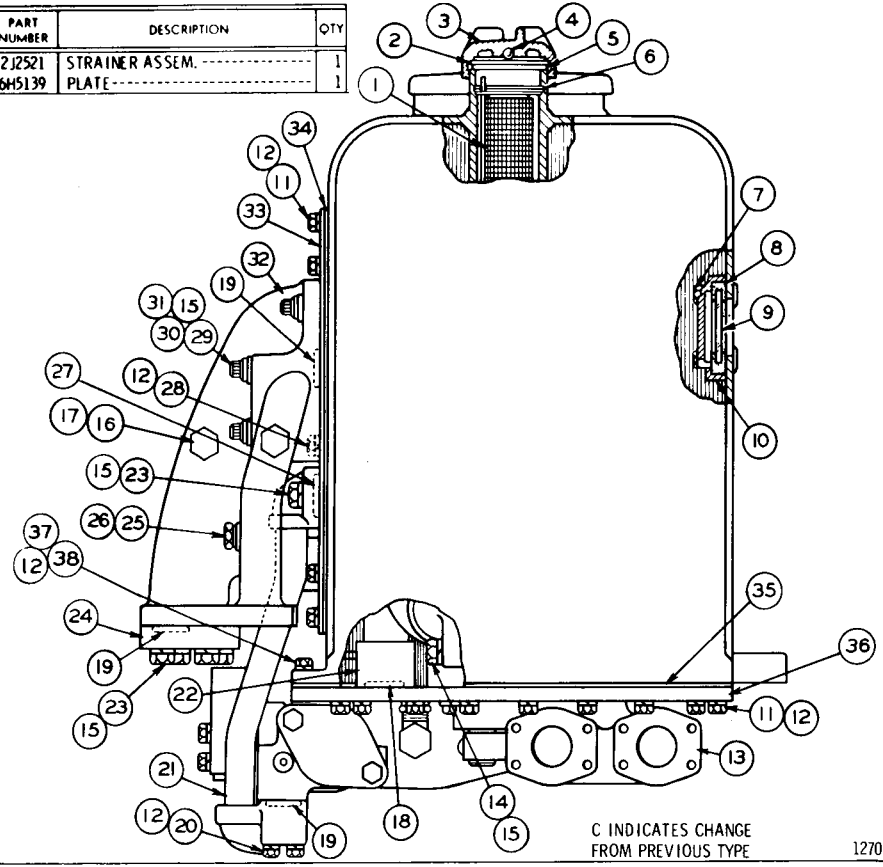

	REF. NO.	PART NUMBER	DESCRIPTION	QTY
	3	7H1447	CAP	1
	4	7B6368	BALL	1
	5	9H6454	GASKET	1
	6	6H9361	RING	1
	7	4J8265	NUT	4
	8	4J8251	GROMMET	1
	9	4J8252	GLASS	1
	10	4J8250	RETAINER	1
C	11	1A2029	BOLT	60
	12	3B4506	LOCKWASHER	73
	13	5J3136	MANIFOLD	1
	14	9S1366	BOLT	2
	15	3B4508	LOCKWASHER	14
C	16	7M5897	PLUG ASSEM.	2
	17	2M9780	SEAL (1 in each 7M5897 Plug Assem.)	2
	18	8F3469	SEAL	2
C	19	5J1584	SEAL	6
	20	S1590	BOLT	4
	21	5J3480	TUBE ASSEM.-(11.55" long overall)	1
	22	6J1942	TUBE ASSEM.-(15.77" long overall)	1
	23	S1585	BOLT	6
	24	5J3545	COVER	1
	25	5M7908	PLUG ASSEM.	1
	26	3J1907	SEAL (Part of 5M7908 Plug Assem.)	1
	27	5J1356	SEAL	1
	28	L1351	BOLT	1
	29	5J5793	BOLT-(2" long)	1
	30	5J5794	BOLT-(3.5" long)	2
	31	4K5175	BOLT-(1.5" long)	3
	32	5J9930	MANIFOLD	1
	33	6J1029	COVER ASSEM.	1
	34	5J3140	GASKET	1
	35	6J1053	GASKET	1
	36	6J1054	PLATE	1
C	37	4B4278	WASHER	8
C	38	S1588	BOLT	8

5J3691 TANK AND VALVE GROUP—As Viewed from Rear of Tractor—Part 1 of 3
183 & 193 Hydraulic Controls Serial No. 28H5400 to 28H6119 inclusive
8S9785 Complete Gasket Kit is available

5J3691 TANK AND VALVE GROUP—As Viewed from Right Hand Side of Tractor—Part 2 of 3

183 & 193 Hydraulic Controls Serial No. 28H5400 to 28H6119 inclusive

5J3067 & 5J2956 Valve parts are shown on Pages 16B & 18

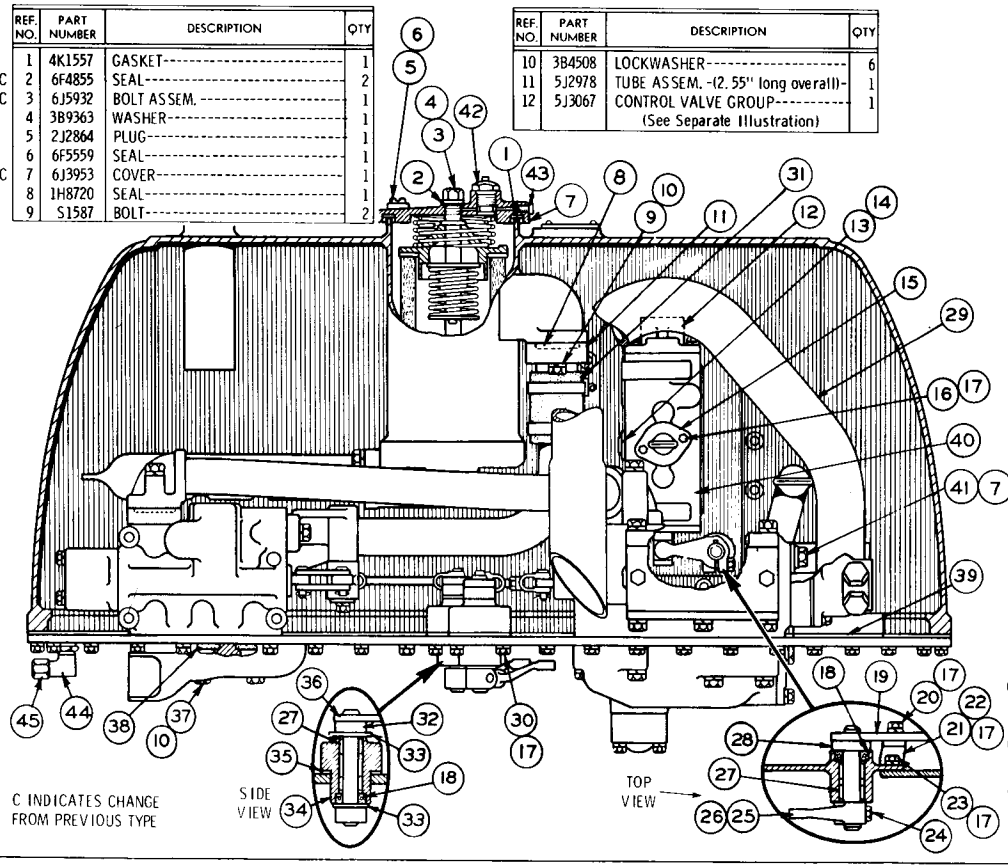

REF. NO.	PART NUMBER	DESCRIPTION	QTY
1	4K1557	GASKET	1
C 2	6F4855	SEAL	2
C 3	6J5932	BOLT ASSEM.	1
4	3B9363	WASHER	1
5	2J2864	PLUG	1
6	6F5559	SEAL	1
C 7	6J3953	COVER	1
8	1H8720	SEAL	1
9	S1587	BOLT	2

REF. NO.	PART NUMBER	DESCRIPTION	QTY
10	3B4508	LOCKWASHER	6
11	5J2978	TUBE ASSEM. -(2.55" long overall)-	1
12	5J3067	CONTROL VALVE GROUP (See Separate Illustration)	1

REF. NO.	PART NUMBER	DESCRIPTION	QTY
13	3J2493	PLUG ASSEM.	1
14	3K360	SEAL (Part of 3J2493 Plug Assem.)	1
15	5J2910	TUBE ASSEM. -(7.00" long overall)-	1
16	S1591	BOLT	2
17	3B4506	LOCKWASHER	14
18	3J4407	SEAL	2
19	5J3541	LEVER ASSEM.	1
20	S509	BOLT	1
21	6J1996	STRAP	1
22	S1588	BOLT	1
23	L1351	BOLT	1
24	1A2209	BOLT	1
25	3J7582	LEVER	1
26	1B8707	KEY	1
27	7F7983	BEARING	4
28	7M2360	SPACER	1
29	6J1991	TUBE ASSEM. -(39.19" long overall)-	1
30	1A2029	BOLT	8
31	4J7313	HOSE —(3.38" long)—	1
	2J6540	CLAMP	2
32	2H5746	ADAPTER	1
33	8B4037	WASHER	2
34	5J880	HOUSING	1
35	4J8425	GASKET	1
36	5J3897	LEVER ASSEM.	1
37	9S1366	BOLT	4
38	5J1357	SEAL	2
39	3R2425	GASKET	1
40	5J2956	CONTROL VALVE GROUP (See Separate Illustration)	1
41	S1594	BOLT	1
C 42	6J468	INDICATOR ASSEM.	1
	2M9780	SEAL (Part of 6J468 Indicator Assem.)	1
C 43	5J9286	PLUG ASSEM.	1
	4J7533	SEAL (Part of 5J9286 Plug Assem.)	1
C 44	6K3879	ELBOW	1
C 45	6J7366	CAP	1

ONLY "CATERPILLAR" PARTS GIVE "CATERPILLAR" PERFORMANCE

REF NO	PART NUMBER	DESCRIPTION	QTY
1	2J917	RETAINER	1
2	4J6064	ELEMENT ASSEM. (Disposable)	1
3	5J1473	SEAT ASSEM.	1
4	2J918	VALVE	1
5	2J8455	SPRING (Inner)	1

REF NO	PART NUMBER	DESCRIPTION	QTY
6	3F566	WASHER	1
7	2J6114	SPRING (Outer)	1
8	5J1283	SPRING	1
C 9	1H1200	PIN	1
10	5J2871	TUBE ASSEM. (23.45" long overall)	1

REF NO	PART NUMBER	DESCRIPTION	QTY
11	6J1055	TANK ASSEM.	1
12	2J2411	BLOCK	1
13	5J96	STUD	4
14	6J2237	BOSS	18
		(Parts of 6J1055 Tank Assem.)	
15	1D4566	BOLT	1
16	3B4508	LOCKWASHER	8
17	1A1460	BOLT	1
18	4J523	SEAL	2
19 ▲	5J3039	CONTROL VALVE GROUP	1
20	4K1064	ROD	1
21	5B9079	NUT	1
22	4J8922	END	1
23	1J4384	PIN	6
24	3B4615	COTTER PIN	6
25	7H3912	BUSHING	4
26	1J8490	ROD	1
27 ▲	5J3263	RELIEF VALVE GROUP	1
28	5J3200	LEVER	2
29	1B8706	KEY	2
30	S 1588	BOLT	2
31	2H5746	ADAPTER	1
32	3J4407	SEAL	1
33	8B4037	WASHER	1
34	5J880	HOUSING	1
35	4J8425	GASKET	1
36	7F7983	BEARING	4
37	5J3117	LEVER ASSEM.	1
38	S 509	BOLT	1
39	3B4506	LOCKWASHER	3
40	3F1417	WASHER	1
41	5J2979	LEVER	1
42	1J4603	LINK	2
43	4K1272	SPACER	1
44	5J2886	TUBE ASSEM. (14.18" Long Overall)	1
45	S 1585	BOLT	4
46	2M6831	PLATE (Serial Number)	1
47	4B9158	SCREW	2
48	V 375	BOLT	2
49	6J1930	TUBE ASSEM. (22.55" Long Overall)	1

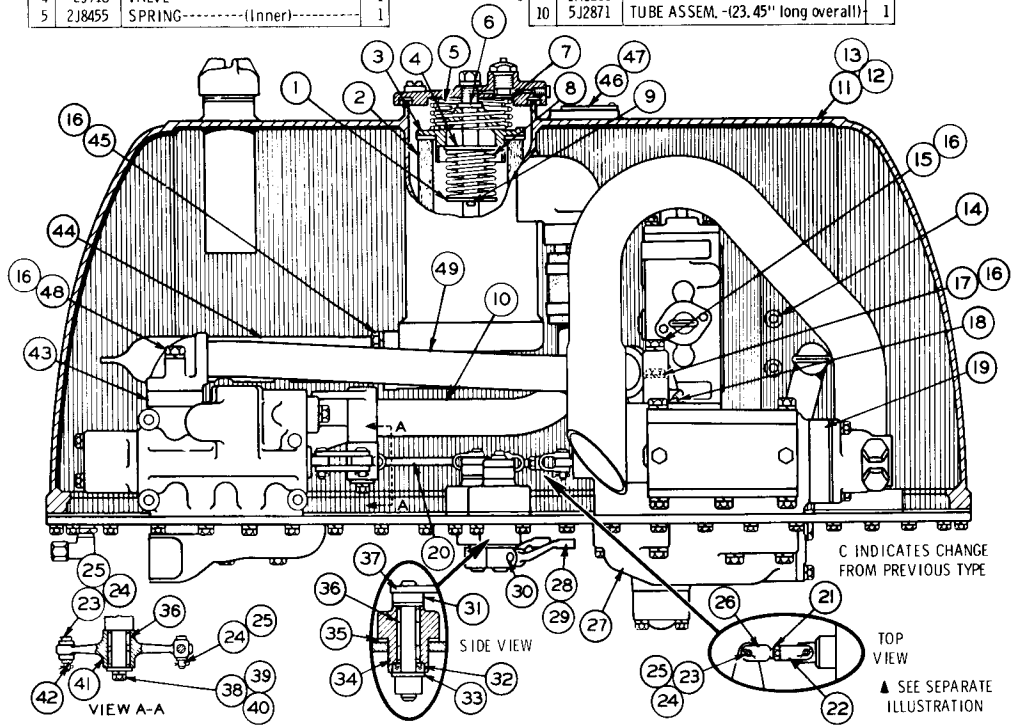

125820

5J3691 TANK AND VALVE GROUP—As Viewed from Right Hand Side of Tractor—Part 3 of 3
183 & 193 Hydraulic Controls Serial No. 28H5400 to 28H6119 inclusive
5J3263 & 5J3039 Valve parts are shown on Pages 15, 16 & 16A

5J3691 TANK AND VALVE GROUP—As Viewed from Rear of Tractor—Part 1 of 3
183 & 193 Hydraulic Controls Serial No. 28H6120 to 28H8556 inclusive
8S9785 Complete Gasket Kit is available

REF. NO.	PART NUMBER	DESCRIPTION	QTY
1	2J2521	STRAINER ASSEM.	1
2	6H5139	PLATE	1

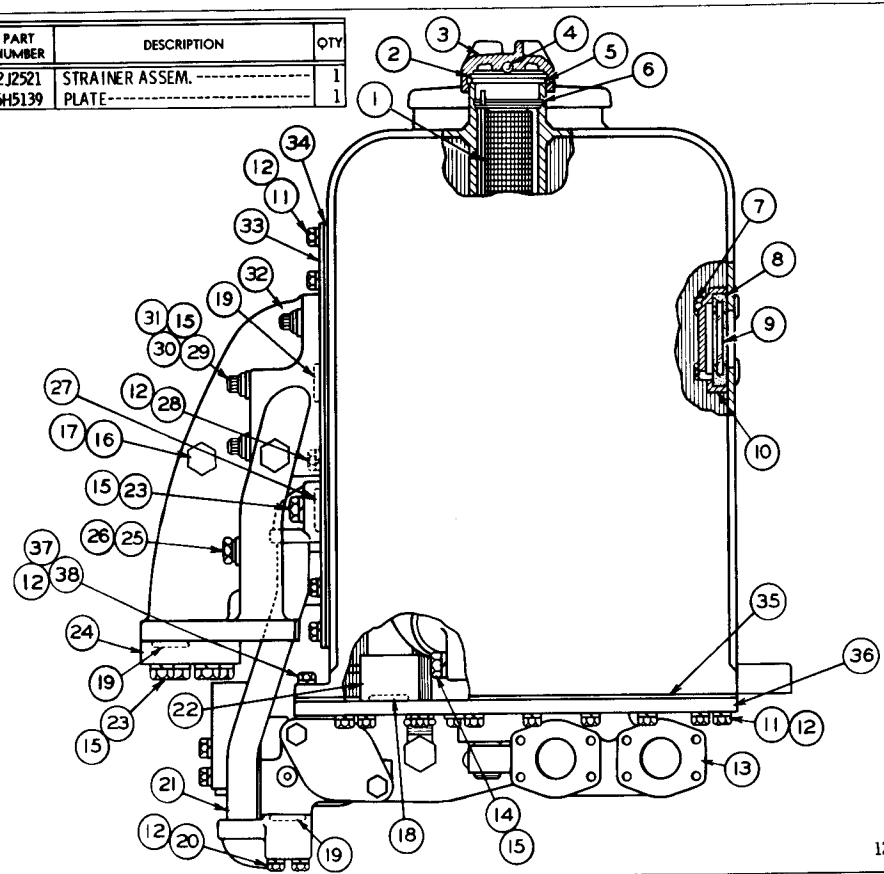

REF. NO.	PART NUMBER	DESCRIPTION	QTY
3	7H1447	CAP	1
4	7B6368	BALL	1
5	9H6454	GASKET	1
6	6H9361	RING	1
7	4J8265	NUT	4
8	4J8251	GROMMET	1
9	4J8252	GLASS	1
10	4J8250	RETAINER	1
11	1A2029	BOLT	60
12	3B4506	LOCKWASHER	73
13	5J3136	MANIFOLD	1
14	9S1366	BOLT	2
15	3B4508	LOCKWASHER	14
16	7M5897	PLUG ASSEM.	2
17	2M9780	SEAL (1 in each 7M5897 Plug Assem.)	2
18	8F3469	SEAL	2
19	5J1584	SEAL	6
20	S1590	BOLT	4
21	5J3480	TUBE ASSEM.-(11.55" long overall)	1
22	6J1942	TUBE ASSEM.-(15.77" long overall)	1
23	S1585	BOLT	6
24	5J3545	COVER	1
25	5M7908	PLUG ASSEM.	1
26	3J1907	SEAL (Part of 5M7908 Plug Assem.)	1
27	5J1356	SEAL	1
28	L1351	BOLT	1
29	5J5793	BOLT-(2" long)	1
30	5J5794	BOLT-(3.5" long)	2
31	4K5175	BOLT-(1.5" long)	3
32	5J9930	MANIFOLD	1
33	6J1029	COVER ASSEM.	1
34	5J3140	GASKET	1
35	6J1053	GASKET	1
36	6J1054	PLATE	1
37	4B4278	WASHER	8
38	S1588	BOLT	8

ONLY "CATERPILLAR" PARTS GIVE "CATERPILLAR" PERFORMANCE

REF. NO.	PART NUMBER	DESCRIPTION	QTY
1	4K1557	GASKET	1
2	6F4855	SEAL	2
3	6J5932	BOLT ASSEM.	1
4	3B9363	WASHER	1
5	2J2864	PLUG	1
6	6F5559	SEAL	1
7	6J3953	COVER	1
8	1H8720	SEAL	1
9	S1587	BOLT	2

REF. NO.	PART NUMBER	DESCRIPTION	QTY
10	3B4508	LOCKWASHER	6
11	5J2978	TUBE ASSEM. -(2.55" long overall)-	1
12	7J2026	CONTROL VALVE GROUP (See Separate Illustration)	1

REF. NO.	PART NUMBER	DESCRIPTION	QTY
13	3J2493	PLUG ASSEM.	1
14	3K360	SEAL (Part of 3J2493 Plug Assem.)	1
15	5J2910	TUBE ASSEM. -(7.00" long overall)-	1
16	S1591	BOLT	2
17	3B4506	LOCKWASHER	14
18	3J4407	SEAL	2
19	5J3541	LEVER ASSEM.	1
20	S509	BOLT	1
21	6J1996	STRAP	1
22	S1588	BOLT	1
23	L1351	BOLT	1
24	1A2209	BOLT	1
25	3J7582	LEVER	1
26	1B8707	KEY	1
27	7F7983	BEARING	4
28	7M2360	SPACER	1
29	6J1991	TUBE ASSEM. -(39.19" long overall)-	1
30	1A2029	BOLT	8
31	4J7313	HOSE -(3.38" long)	1
	2J6540	CLAMP	2
32	2H5746	ADAPTER	1
33	8B4037	WASHER	2
34	5J880	HOUSING	1
35	4J8425	GASKET	1
36	5J3897	LEVER ASSEM.	1
37	9S1366	BOLT	4
38	5J1357	SEAL	2
39	3R2425	GASKET	1
40	5J2956	CONTROL VALVE GROUP (See Separate Illustration)	1
41	S1594	BOLT	1
42	6J468	INDICATOR ASSEM.	1
	2M9780	SEAL (Part of 6J468 Indicator Assem.)	1
43	5J9286	PLUG ASSEM.	1
	4J7533	SEAL (Part of 5J9286 Plug Assem.)	1
44	6K3879	ELBOW	1
45	6J7366	CAP	1

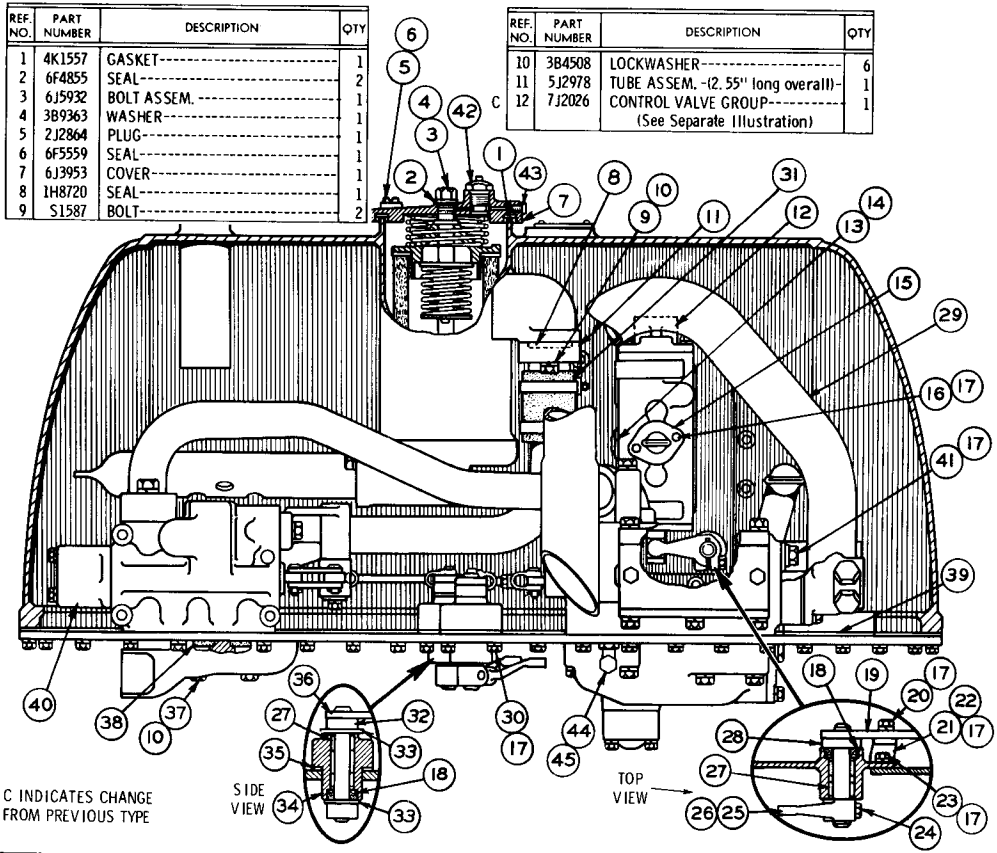

105815

5J3691 TANK AND VALVE GROUP—As Viewed from Right Hand Side of Tractor—Part 2 of 3
183 & 193 Hydraulic Controls Serial No. 28H6120 to 28H8556 inclusive
7J2026 & 5J2956 Valve parts are shown on Pages 17 & 18

5J3691 TANK AND VALVE GROUP—As Viewed from Right Hand Side of Tractor—Part 3 of 3

183 & 193 Hydraulic Controls Serial No. 28H6120 to 28H8556 inclusive

5J3263 & 5J3039 Valve parts are shown on Pages 15 & 16A

REF. NO.	PART NUMBER	DESCRIPTION	QTY
1	2J917	RETAINER	1
2	4J6064	ELEMENT ASSEM. -(Disposable)	1
3	5J1473	SEAT ASSEM.	1
4	2J918	VALVE	1
5	2J8455	SPRING-(Inner)	1

REF NO.	PART NUMBER	DESCRIPTION	QTY
6	3F566	WASHER	1
7	2J6114	SPRING-(Outer)	1
8	5J1283	SPRING	1
9	1H1200	PIN	1
10	5J2871	TUBE ASSEM. -(23.45" long overall)	1

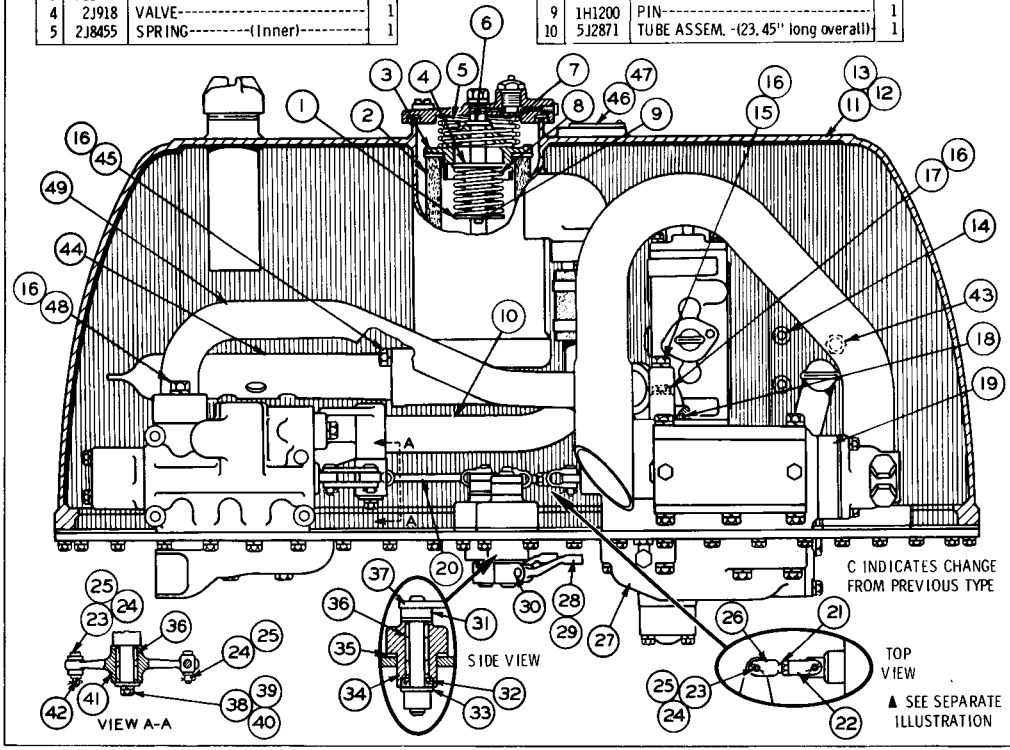

	REF. NO.	PART NUMBER	DESCRIPTION	QTY
	11	6J1055	TANK ASSEM.	1
	12	2J2411	BLOCK	1
	13	5J96	STUD	4
	14	6J2237	BOSS	18
			(Parts of 6J1055 Tank Assem.)	
	15	1D4566	BOLT	1
	16	3B4508	LOCKWASHER	8
	17	1A1460	BOLT	1
C	18	4J523	SEAL	1
▲	19	5J3039	CONTROL VALVE GROUP	1
	20	4K1064	ROD	1
	21	5B9079	NUT	1
	22	4J8922	END	1
	23	1J4384	PIN	6
	24	3B4615	COTTER PIN	6
	25	7H3912	BUSHING	4
	26	1J8490	ROD	1
▲	27	5J3263	RELIEF VALVE GROUP	1
	28	5J3200	LEVER	2
	29	1B8706	KEY	2
	30	S1588	BOLT	2
	31	2H5746	ADAPTER	1
	32	3J4407	SEAL	1
	33	8B4037	WASHER	1
	34	5J880	HOUSING	1
	35	4J8425	GASKET	1
	36	7F7983	BEARING	4
	37	5J3117	LEVER ASSEM.	1
	38	S509	BOLT	1
	39	3B4506	LOCKWASHER	3
	40	3F1417	WASHER	1
	41	5J2979	LEVER	1
	42	1J4603	LINK	2
C	43	3K8460	PLUG	1
C		1J9671	SEAL	1
	44	5J2886	TUBE ASSEM. -(14.18" long overall)	1
	45	S1585	BOLT	4
	46	2M6831	PLATE-(Serial Number)	1
	47	4B9158	SCREW	2
C	48	S1587	BOLT	2
C	49	7J1247	TUBE ASSEM. -(25.68" long overall)	1

105816

REF. NO.	PART NUMBER	DESCRIPTION	QTY
1	2J2521	STRAINER ASSEM.	1
2	6H5139	PLATE	1

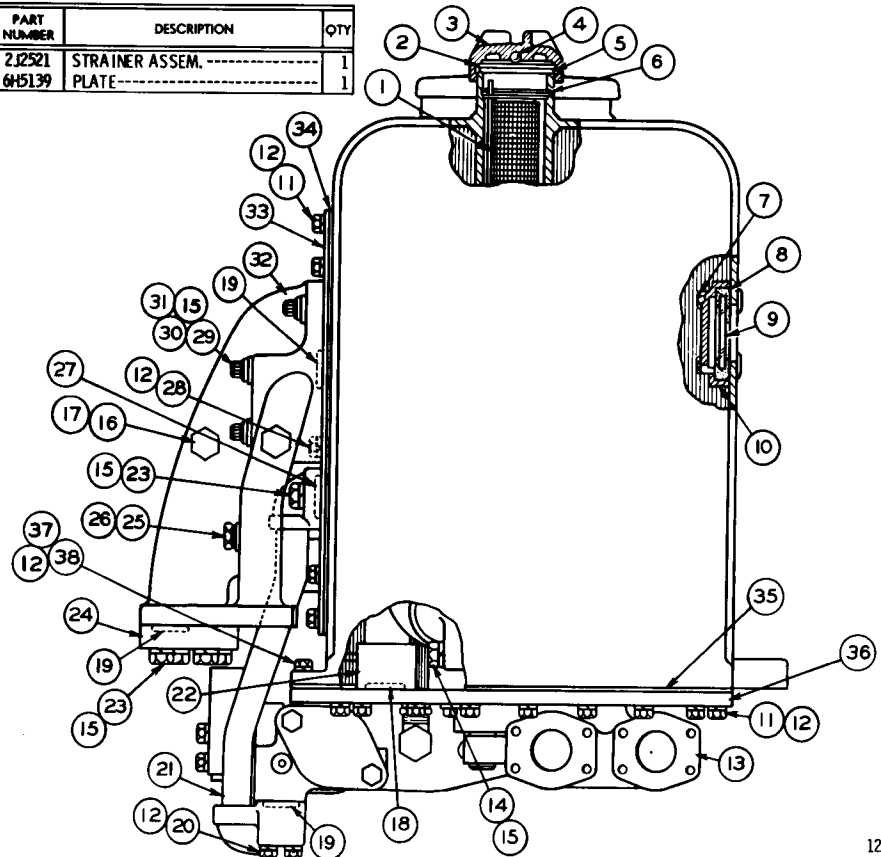

REF. NO.	PART NUMBER	DESCRIPTION	QTY
3	7H1447	CAP	1
4	7B6368	BALL	1
5	9H6454	GASKET	1
6	6H9361	RING	1
7	4J8265	NUT	4
8	4J8251	GROMMET	1
9	4J8252	GLASS	1
10	4J8250	RETAINER	1
11	1A2029	BOLT	60
12	3B4506	LOCKWASHER	73
13	5J3136	MANIFOLD	1
14	9S1366	BOLT	2
15	3B4508	LOCKWASHER	14
16	7M5897	PLUG ASSEM.	2
17	2M9780	SEAL (1 in each 7M5897 Plug Assem.)	2
18	8F3469	SEAL	2
19	5J1584	SEAL	6
20	S1590	BOLT	4
21	5J3480	TUBE ASSEM.-(11.55" long overall)	1
22	6J1942	TUBE ASSEM.-(15.77" long overall)	1
23	S1585	BOLT	6
24	5J3545	COVER	1
25	5M7908	PLUG ASSEM.	1
26	3J1907	SEAL (Part of 5M7908 Plug Assem.)	1
27	5J1356	SEAL	1
28	L1351	BOLT	1
29	5J5793	BOLT-(2" long)	1
30	5J5794	BOLT-(3.5" long)	2
31	4K5175	BOLT-(1.5" long)	3
32	5J9930	MANIFOLD	1
33	6J1029	COVER ASSEM.	1
34	5J3140	GASKET	1
35	6J1053	GASKET	1
36	6J1054	PLATE	1
37	4B4278	WASHER	8
38	S1588	BOLT	8

5J3691 TANK AND VALVE GROUP—As Viewed from Rear of Tractor—Part 1 of 3
183 & 193 Hydraulic Controls Serial No. 28H8557 to 28H8727 inclusive
8S9785 Complete Gasket Kit is available

5J3691 TANK AND VALVE GROUP—As Viewed from Right Hand Side of Tractor—Part 2 of 3

183 & 193 Hydraulic Controls Serial No. 28H8557 to 28H8727 inclusive

7J2026 & 7J4151 Valve parts are shown on Pages 17 & 17B

REF. NO.	PART NUMBER	DESCRIPTION	QTY
1	4K1557	GASKET	1
2	6F4855	SEAL	2
3	6J5932	BOLT ASSEM.	1
4	3B9363	WASHER	1
5	2J2864	PLUG	1
6	6F5559	SEAL	1
7	6J3953	COVER	1
C 8	S1594	BOLT	1
9	6K3879	ELBOW	1

REF. NO.	PART NUMBER	DESCRIPTION	QTY
10	3B4508	LOCKWASHER	6
11	6J7366	CAP	1
12	7J2026	CONTROL VALVE GROUP (See Separate Illustration)	1

REF. NO.	PART NUMBER	DESCRIPTION	QTY
13	3J2493	PLUG ASSEM.	1
14		SEAL (Part of 3J2493 Plug Assem.)	1
15	5J2910	TUBE ASSEM. -(7.00" long overall)-	1
16	S1591	BOLT	2
17	3B4506	LOCKWASHER	13
18	3J4407	SEAL	2
19	5J3541	LEVER ASSEM.	1
20	S509	BOLT	1
21	6J1996	STRAP	1
22	S1588	BOLT	1
23	L1351	BOLT	1
24	1A2209	BOLT	1
25	3J7582	LEVER	1
26	1B8707	KEY	1
C 27	7F7983	BEARING	4
28	7M2360	SPACER	1
29	6J1991	TUBE ASSEM.-(39.19" long overall)-	1
30	1A2029	BOLT	8
31	4J7313	HOSE—(3.38" long)	1
	2J6540	CLAMP	2
32	2H5746	ADAPTER	1
33	8B4037	WASHER	2
34	5J880	HOUSING	1
35	4J8425	GASKET	1
C 36	7J4122	LEVER ASSEM.	1
37	9S1366	BOLT	4
38	5J1357	SEAL	2
39	3R2425	GASKET	1
C 40	7J4151	CONTROL VALVE GROUP (See Separate Illustration)	1
41	6J468	INDICATOR ASSEM.	1
	2M9780	SEAL (Part of 6J468 Assem.)	1
42	5J9286	PLUG ASSEM.	1
	4J7533	SEAL (Part of 5J9286 Assem.)	

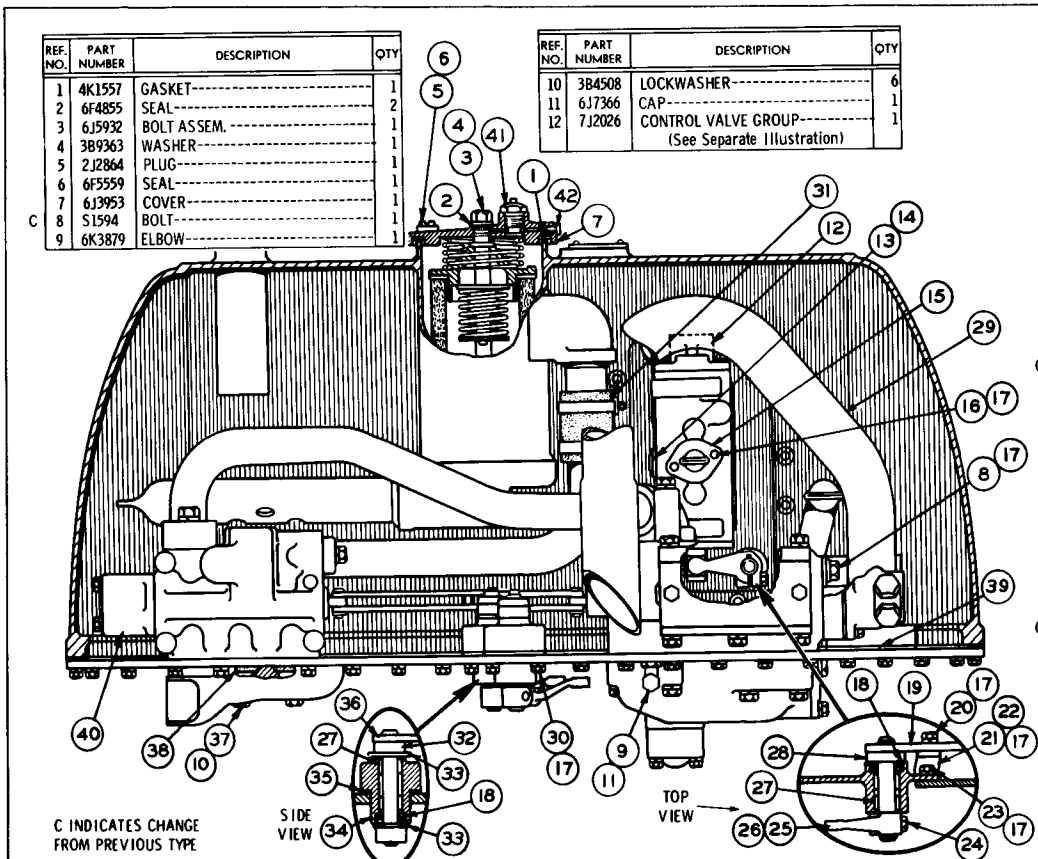

ONLY "CATERPILLAR" PARTS GIVE "CATERPILLAR" PERFORMANCE

REF. NO.	PART NUMBER	DESCRIPTION	QTY
1	2J917	RETAINER	1
2	4J6064	ELEMENT ASSEM. (Disposable)	1
3	5J1473	SEAT ASSEM.	1
4	2J918	VALVE	1
5	2J8455	SPRING (Inner)	1

REF NO.	PART NUMBER	DESCRIPTION	QTY
6	3F566	WASHER	1
7	2J6114	SPRING (Outer)	1
8	5J1283	SPRING	1
9	1H1200	PIN	1
10	5J2871	TUBE ASSEM. -(23, 45" long overall)	1

	REF. NO.	PART NUMBER	DESCRIPTION	QTY
C	11	7J2772	TANK ASSEM.	1
	12	2J2411	BLOCK	1
	13	5J96	STUD	4
	14	6J2237	BOSS	18
			(Parts of 7J2772 Assem.)	
	15	1D4566	BOLT	1
	16	3B4508	LOCKWASHER	2
	17	1A1460	BOLT	1
	18	4J523	SEAL	1
▲	19	5J3039	CONTROL VALVE GROUP	1
C	20	7J4123	LINK	2
	21	S1587	BOLT	2
C	22	7J2378	LINK	2
C	23	5F9199	PIN	4
C	24	8S7803	RETAINER	4
C	25	7H3912	BUSHING	2
	26	4B9158	SCREW	2
▲	27	5J3263	RELIEF VALVE GROUP	1
	28	5J3200	LEVER	2
	29	1B8706	KEY	2
	30	S1588	BOLT	2
	31	2H5746	ADAPTER	1
	32	3J4407	SEAL	1
	33	8B4037	WASHER	1
	34	5J880	HOUSING	1
	35	4J8425	GASKET	1
C	36	7F7983	BEARING	2
	37	5J3117	LEVER ASSEM.	1
	38	3K8460	PLUG	1
		1J9671	SEAL	1
	39	7J1247	TUBE ASSEM.	1
	40	2M6831	PLATE (Serial Number)	1

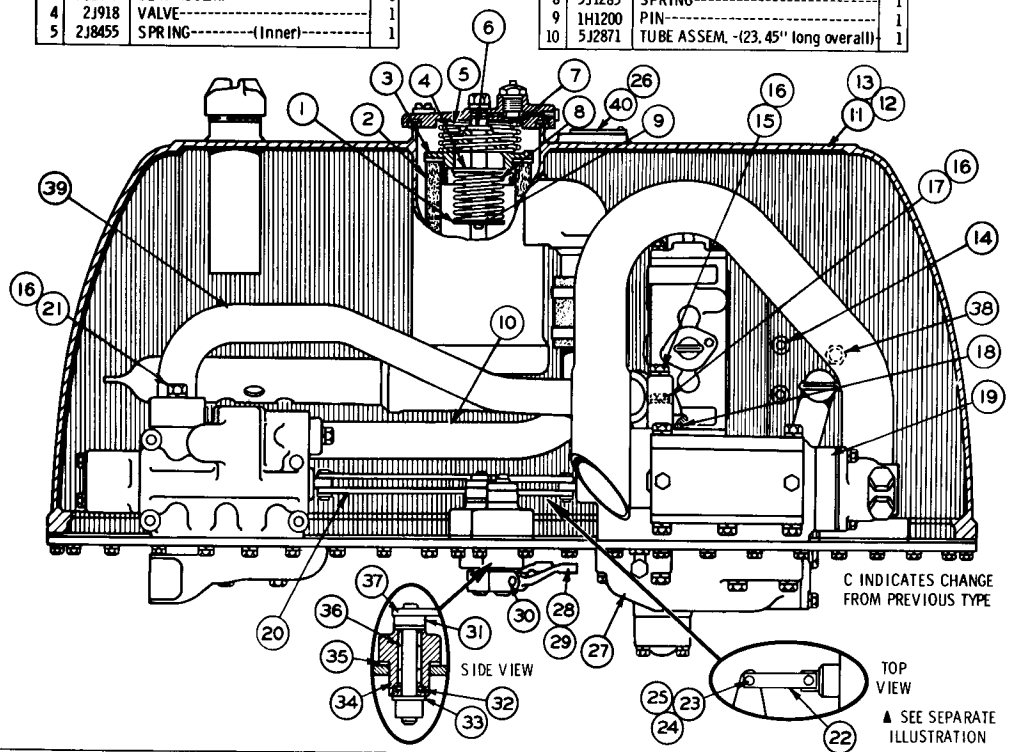

5J3691 TANK AND VALVE GROUP—As Viewed from Right Hand Side of Tractor—Part 3 of 3
183 & 193 Hydraulic Controls Serial No. 28H8557 to 28H8727 inclusive
5J3263 & 5J3039 Valve parts are shown on Pages 15 & 16A

5J3691 TANK AND VALVE GROUP—As Viewed from Rear of Tractor—Part 1 of 3
183 & 193 Hydraulic Controls Serial No. 28H8728 to 28H10185 inclusive
8S9785 Complete Gasket Kit is available

REF. NO.	PART NUMBER	DESCRIPTION	QTY
1	2J2521	STRAINER ASSEM.	1
2	6H5139	PLATE	1

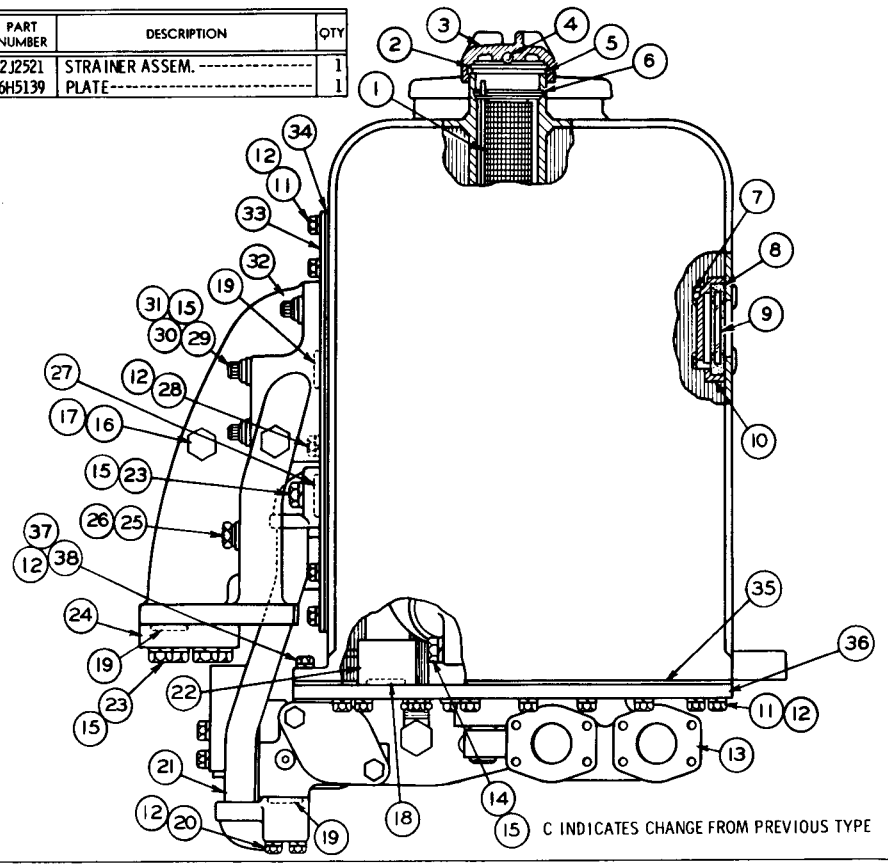

C INDICATES CHANGE FROM PREVIOUS TYPE

REF. NO.	PART NUMBER	DESCRIPTION	QTY
3	7H1447	CAP	1
4	7B6368	BALL	1
5	9H6454	GASKET	1
6	6H9361	RING	1
7	4J8265	NUT	4
8	4J8251	GROMMET	1
9	4J8252	GLASS	1
10	4J8250	RETAINER	1
11	1A2029	BOLT	60
12	3B4506	LOCKWASHER	73
13	5J3136	MANIFOLD	1
14	9S1366	BOLT	2
15	3B4508	LOCKWASHER	14
C 16	1S69	PLUG ASSEM.	2
17	3K360	SEAL (1 in each 3K360 Plug Assem.)	2
18	8F3469	SEAL	2
19	5J1584	SEAL	6
20	S1590	BOLT	4
21	5J3480	TUBE ASSEM.-(11.55" long overall)	1
22	6J1942	TUBE ASSEM.-(15.77" long overall)	1
23	S1585	BOLT	6
24	5J3545	COVER	1
25	5M7908	PLUG ASSEM.	1
26	3J1907	SEAL (Part of 5M7908 Plug Assem.)	1
27	5J1356	SEAL	1
28	L1351	BOLT	1
29	5J5793	BOLT-(2" long)	1
30	5J5794	BOLT-(3.5" long)	2
31	4K5175	BOLT-(1.5" long)	3
32	5J9930	MANIFOLD	1
33	6J1029	COVER ASSEM.	1
34	5J3140	GASKET	1
35	6J1053	GASKET	1
36	6J1054	PLATE	1
37	4B4278	WASHER	8
127029 38	S1588	BOLT	8

ONLY "CATERPILLAR" PARTS GIVE "CATERPILLAR" PERFORMANCE

REF. NO.	PART NUMBER	DESCRIPTION	QTY
1	4K1557	GASKET	1
2	6F4855	SEAL	2
3	6J5932	BOLT ASSEM.	1
4	3B9363	WASHER	1
5	2J2864	PLUG	1
6	6F5559	SEAL	1
7	6J3953	COVER	1
8	S1594	BOLT	1
9	6K3879	ELBOW	1

REF. NO.	PART NUMBER	DESCRIPTION	QTY
10	3B4508	LOCKWASHER	6
11	6J7366	CAP	1
12	7J2026	CONTROL VALVE GROUP (See Separate Illustration)	1

REF. NO.	PART NUMBER	DESCRIPTION	QTY
13	3J2493	PLUG ASSEM.	1
14	3K360	SEAL (Part of 3J2493 Plug Assem.)	1
15	5J2910	TUBE ASSEM. -(7.00" long overall)-	1
16	S1591	BOLT	2
17	3B4506	LOCKWASHER	13
18	3J4407	SEAL	2
19	5J3541	LEVER ASSEM.	1
20	S509	BOLT	1
21	6J1996	STRAP	1
22	S1588	BOLT	1
23	L1351	BOLT	1
24	1A2209	BOLT	1
25	3J7582	LEVER	1
26	1B8707	KEY	1
27	7F7983	BEARING	4
28	7M2360	SPACER	1
29	6J1991	TUBE ASSEM. -(39.19" long overall)-	1
30	1A2029	BOLT	8
31	4J7313	HOSE ---------(3.38" long)---------	1
	2J6540	CLAMP	2
32	2H5746	ADAPTER	1
33	8B4037	WASHER	2
34	5J880	HOUSING	1
35	4J8425	GASKET	1
36	7J4122	LEVER ASSEM.	1
37	9S1366	BOLT	4
38	5J1357	SEAL	2
39	3R2425	GASKET	1
40	7J4151	CONTROL VALVE GROUP (See Separate Illustration)	1
41	6J468	INDICATOR ASSEM.	1
	2M9780	SEAL (Part of 6J468 Assem.)	1
42	5J9286	PLUG ASSEM.	1
	4J7533	SEAL (Part of 5J9286 Assem.)	1

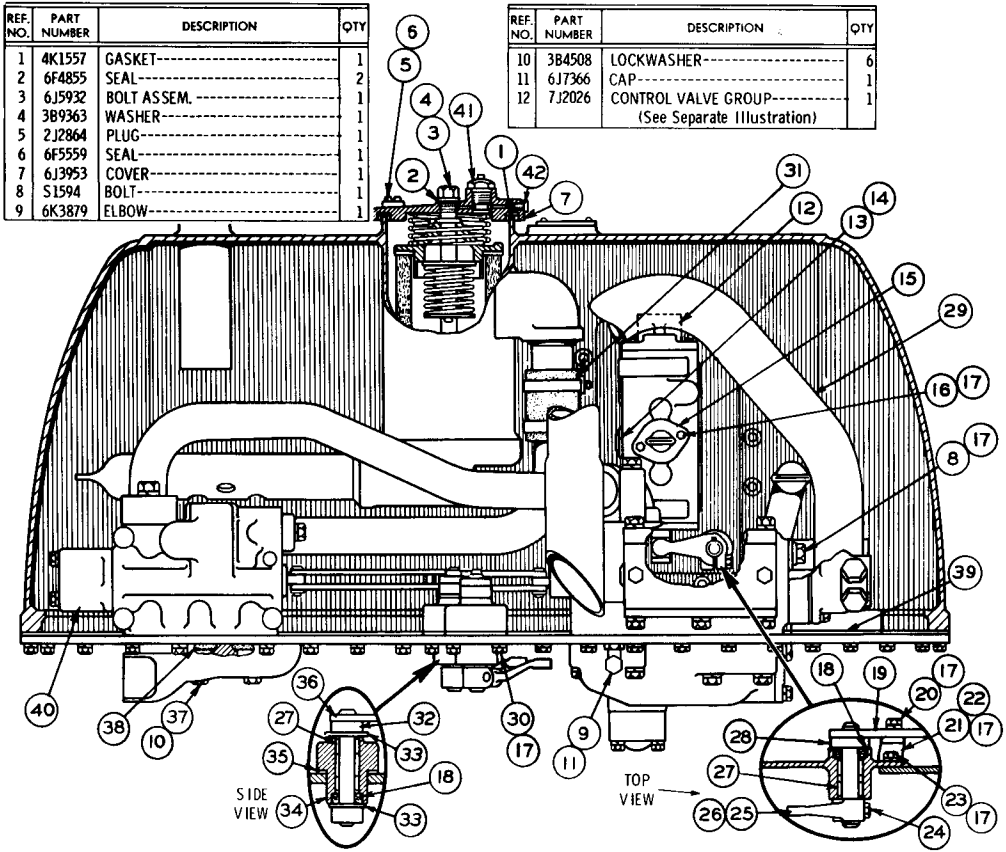

5J3691 TANK AND VALVE GROUP—As Viewed from Right Hand Side of Tractor—Part 2 of 3
183 & 193 Hydraulic Controls Serial No. 28H8728 to 28H10185 inclusive
7J2026 & 7J4151 Valve parts are shown on Pages 17, 17A & 17B

5J3691 TANK AND VALVE GROUP—As Viewed from Right Side of Tractor—Part 3 of 3

183 & 193 Hydraulic Controls Serial No. 28H8728 to 28H10185 inclusive

5J3263 & 5J3039 Valve parts are shown on Pages 15, 15B & 16A

REF. NO.	PART NUMBER	DESCRIPTION	QTY
1	2J917	RETAINER	1
2	4J6064	ELEMENT ASSEM. -(Disposable)	1
3	5J1473	SEAT ASSEM.	1
4	2J918	VALVE	1
5	2J8455	SPRING-(Inner)	1

REF NO	PART NUMBER	DESCRIPTION	QTY
6	3F566	WASHER	1
7	2J6114	SPRING-(Outer)	1
8	5J1283	SPRING	1
9	1H1200	PIN	1
10	5J2871	TUBE ASSEM. -(23.45" long overall)	1

REF. NO.	PART NUMBER	DESCRIPTION	QTY
11	7J2772	TANK ASSEM.	1
12	2J2411	BLOCK	1
13	5J96	STUD	4
14	6J2237	BOSS	18
		(Parts of 7J2772 Assem.)	
15	1D4566	BOLT	1
16	3B4508	LOCKWASHER	2
17	1A1460	BOLT	1
18	4J523	SEAL	1
▲ 19	5J3039	CONTROL VALVE GROUP	1
20	7J4123	LINK	2
21	S1587	BOLT	2
22	7J2378	LINK	2
23	5F9199	PIN	4
24	8S7803	RETAINER	4
25	7H3912	BUSHING	2
26	4B9158	SCREW	2
▲ 27	5J3263	RELIEF VALVE GROUP	1
28	5J3200	LEVER	2
29	1B8706	KEY	2
30	S1588	BOLT	2
31	2H5746	ADAPTER	1
32	3J4407	SEAL	1
33	8B4037	WASHER	1
34	5J880	HOUSING	1
35	4J8425	GASKET	1
36	7F7983	BEARING	2
37	5J3117	LEVER ASSEM.	1
38	3K8460	PLUG	1
	1J9671	SEAL	1
39	7J1247	TUBE ASSEM.	1
40	2M6831	PLATE-(Serial Number)	1

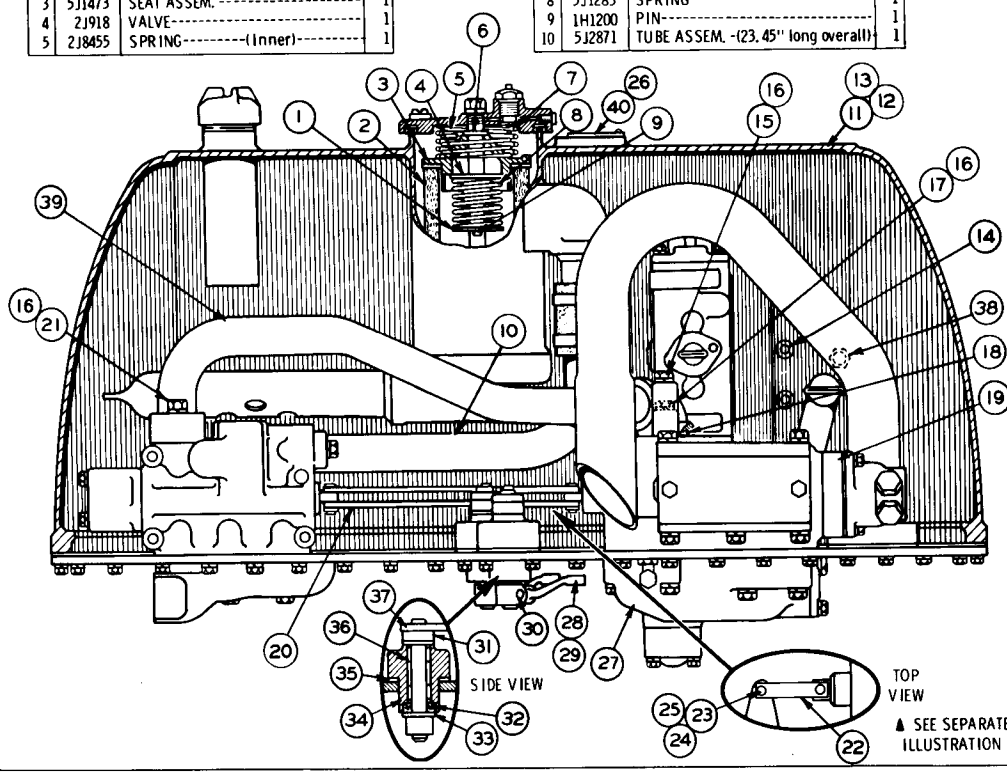

ONLY "CATERPILLAR" PARTS GIVE "CATERPILLAR" PERFORMANCE

REF. NO.	PART NUMBER	DESCRIPTION	QTY
1	2J2521	STRAINER ASSEM.	1
2	6H5139	PLATE	1

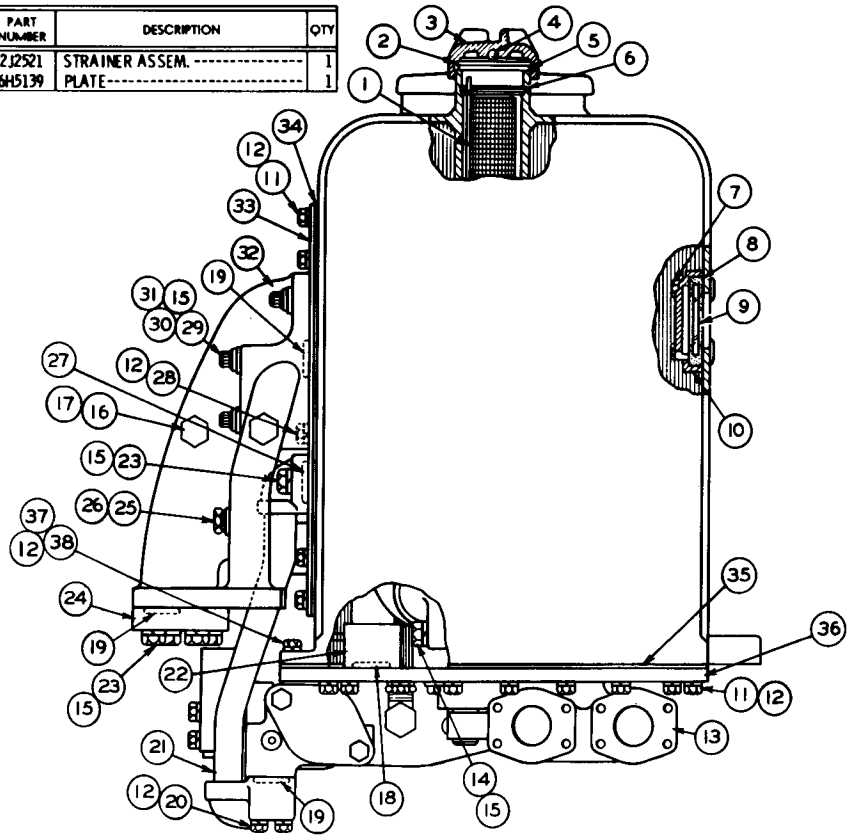

3	7H1447	CAP	1
4	7B6368	BALL	1
5	9H6454	GASKET	1
6	6H9361	RING	1
7	4J8265	NUT	4
8	4J8251	GROMMET	1
9	4J8252	GLASS	1
10	4J8250	RETAINER	1
11	1A2029	BOLT	60
12	3B4506	LOCKWASHER	73
13	5J3136	MANIFOLD	1
14	9S1366	BOLT	2
15	3B4508	LOCKWASHER	14
16	9S4185	PLUG	2
17	3K360	SEAL	2
18	8F3469	SEAL	2
19	5J1584	SEAL	6
20	S1590	BOLT	4
21	5J3480	TUBE ASSEM. -(11.55" long overall)-	1
22	6J1942	TUBE ASSEM. -(15.77" long overall)-	1
23	S1585	BOLT	6
24	5J3545	COVER	1
25	9S4191	PLUG	1
26	3J1907	SEAL	1
27	5J1356	SEAL	1
28	L1351	BOLT	1
29	5J5793	BOLT-(2" long)	1
30	5J5794	BOLT-(3.5" long)	2
31	4K5175	BOLT-(1.5" long)	3
32	5J9930	MANIFOLD	1
33	6J1029	COVER ASSEM.	1
34	5J3140	GASKET	1
35	6J1053	GASKET	1
36	6J1054	PLATE	1
37	4B4278	WASHER	8
38	S1588	BOLT	8

5J3691 TANK AND VALVE GROUP—As Viewed from Rear of Tractor—Part 1 of 3
183 & 193 Hydraulic Controls Serial No. 28H10186 to 28H10851 inclusive
8S9785 Complete Gasket Kit is available

5J3691 TANK AND VALVE GROUP—As Viewed from Right Hand Side of Tractor—Part 2 of 3
183 & 193 Hydraulic Controls Serial No. 28H10186 to 10851 inclusive
7J2026 & 7J4151 Valve parts are shown on Pages 17A & 17B

REF. NO.	PART NUMBER	DESCRIPTION	QTY
1	4K1557	GASKET	1
2	6F4855	SEAL	2
3	7J5581	BOLT	1
4	9S8001	PLUG	1
5	2J2864	PLUG	1
6	6F5559	SEAL	1
7	6J3953	COVER	1
8	4J7533	SEAL	1
9	6K3879	ELBOW	1

REF. NO.	PART NUMBER	DESCRIPTION	QTY
10	3B4508	LOCKWASHER	6
11	6J7366	CAP	1
12	7J2026	CONTROL VALVE GROUP (See Separate Illustration)	1

13	9S8005	PLUG	1
14	3K360	SEAL	1
15	5J2910	TUBE ASSEM. -(7.00" long overall)-	1
16	S1591	BOLT	2
17	3B4506	LOCKWASHER	13
18	3J4407	SEAL	2
19	5J3541	LEVER ASSEM.	1
20	S509	BOLT	1
21	6J1996	STRAP	1
22	S1588	BOLT	1
23	L1351	BOLT	1
24	1A2209	BOLT	1
25	3J7582	LEVER	1
26	1B8707	KEY	1
27	7F7983	BEARING	4
28	7M2360	SPACER	1
29	6J1991	TUBE ASSEM. -(39.19" long overall)-	1
30	1A2029	BOLT	8
31	7J7678	HOSE (3.38" long)	1
	4M7139	CLAMP	2
32	2H5746	ADAPTER	1
33	8B4037	WASHER	2
34	5J880	HOUSING	1
35	4J8425	GASKET	1
36	7J4122	LEVER ASSEM.	1
37	9S1366	BOLT	4
38	5J1357	SEAL	2
39	3R2425	GASKET	1
40	7J4151	CONTROL VALVE GROUP (See Separate Illustration)	1
41	6J468	INDICATOR ASSEM.	1
	2M9780	SEAL	1

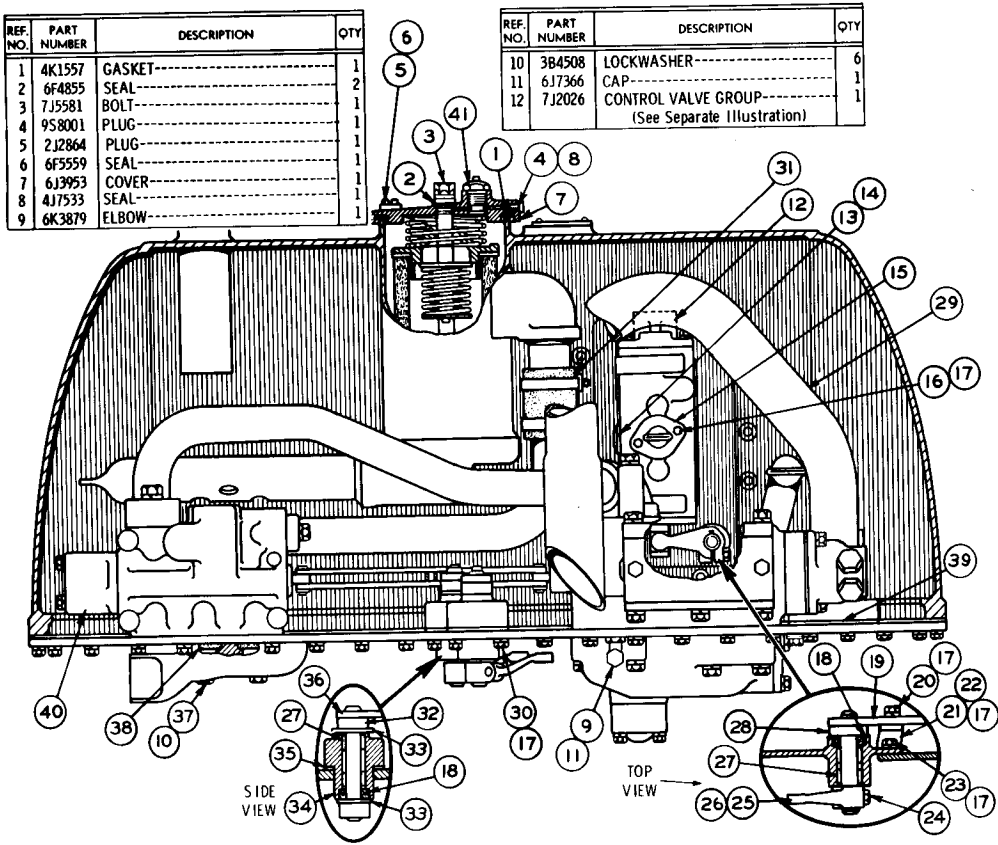

ONLY "CATERPILLAR" PARTS GIVE "CATERPILLAR" PERFORMANCE

REF. NO.	PART NUMBER	DESCRIPTION	QTY
1	2J917	RETAINER	1
2	4J6064	ELEMENT ASSEM. ---(Disposable)---	1
3	5J1473	SEAT ASSEM.	1
4	2J918	VALVE	1
5	2J8455	SPRING---------(Inner)---------	1
6	2M6831	PLATE--------(Serial Number)----	1
7	2J6114	SPRING-------(Outer)----------	1
8	5J2926	SPRING	1
9	1H1200	PIN	1
10	5J2871	TUBE ASSEM. -(23.45" long overall)-	1

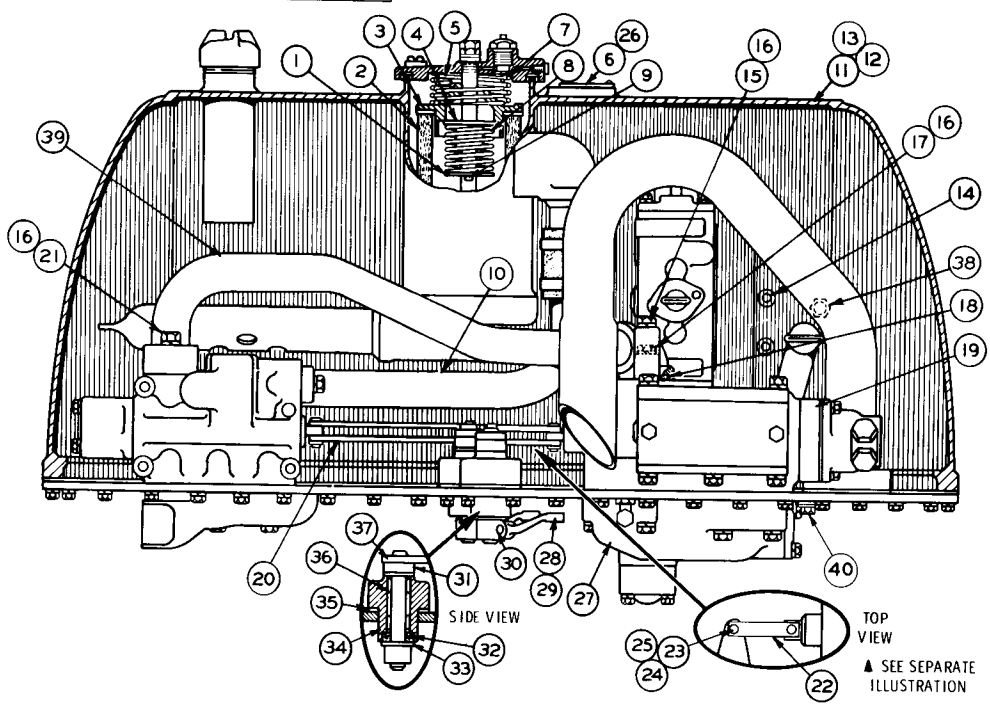

REF. NO.	PART NUMBER	DESCRIPTION	QTY
11	7J2772	TANK ASSEM.	1
12	2J2411	BLOCK	1
13	5J96	STUD	4
14	6J2237	BOSS	18
		(Parts of 7J2772 Assem.)	
15	1D4566	BOLT	1
16	3B4508	LOCKWASHER	2
17	1A1460	BOLT	1
18	4J523	SEAL	1
▲ 19	5J3039	CONTROL VALVE GROUP	1
20	7J4123	LINK	2
21	S1587	BOLT	2
22	7J2378	LINK	2
23	5F9199	PIN	4
24	8S7803	RETAINER	4
25	7H3912	BUSHING	2
26	4B9158	SCREW	2
▲ 27	5J3263	RELIEF VALVE GROUP	1
28	5J3200	LEVER	2
29	1B8706	KEY	2
30	S1588	BOLT	2
31	2H5746	ADAPTER	1
32	3J4407	SEAL	1
33	8B4037	WASHER	1
34	5J880	HOUSING	1
35	4J8425	GASKET	1
36	7F7983	BEARING	2
37	5J3117	LEVER ASSEM.	1
38	3K8460	PLUG	1
	1J9671	SEAL	1
39	7J1247	TUBE ASSEM.	1
	S1594	BOLT	1
40	5L5840	WASHER------( )--------	1
	5B9628	WASHER------( )--------	1

5J3691 TANK AND VALVE GROUP—As Viewed from Right Hand Side of Tractor—Part 3 of 3
183 & 193 Hydraulic Controls Serial No. 28H10186 to 28H10851 inclusive
5J3263 & 5J3039 Valve parts are shown on Pages 15B & 16A

5J3691 TANK AND VALVE GROUP—As Viewed from Rear of Tractor—Part 1 of 3
183 & 193 Hydraulic Controls Serial No. 28H10852 to 28H12745 inclusive
8S9785 Complete Gasket Kit is available

REF. NO.	PART NUMBER	DESCRIPTION	QTY
1	2J2521	STRAINER ASSEM.	1
2	6H5139	PLATE	1

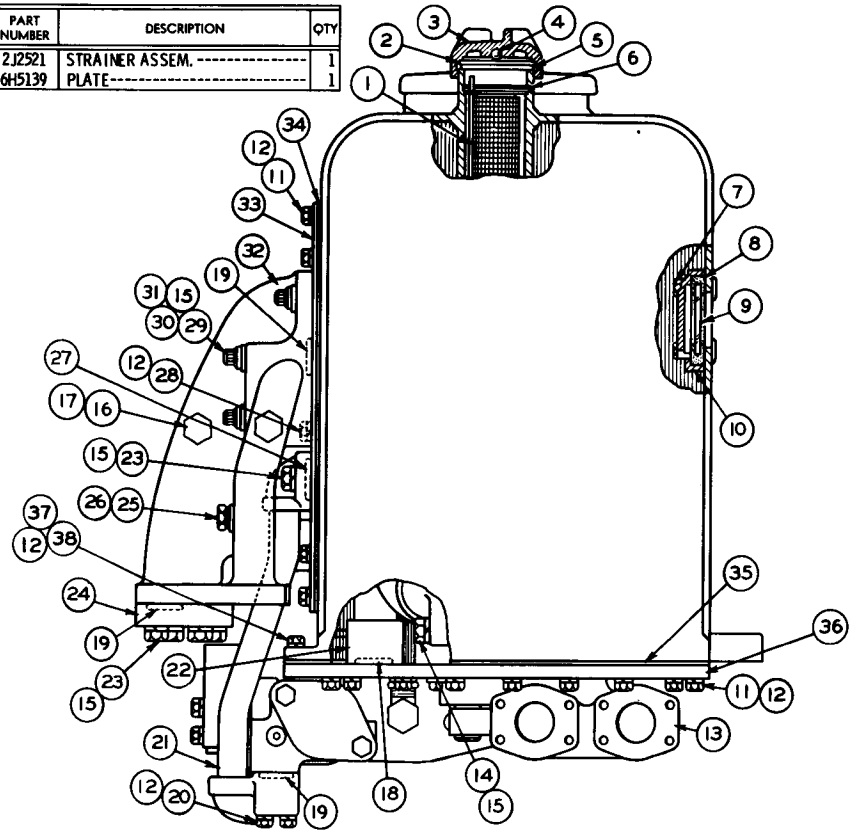

3	7H1447	CAP	1
4	7B6368	BALL	1
5	9H6454	GASKET	1
6	6H9361	RING	1
7	4J8265	NUT	4
8	4J8251	GROMMET	1
9	4J8252	GLASS	1
10	4J8250	RETAINER	1
11	1A2029	BOLT	60
12	3B4506	LOCKWASHER	73
13	5J3136	MANIFOLD	1
14	9S1366	BOLT	2
15	3B4508	LOCKWASHER	14
16	9S4185	PLUG	2
17	3K360	SEAL	2
18	8F3469	SEAL	2
19	5J1584	SEAL	6
20	S1590	BOLT	4
21	5J3480	TUBE ASSEM. -(11.55" long overall)-	1
22	6J1942	TUBE ASSEM. -(15.77" long overall)-	1
23	S1585	BOLT	6
24	5J3545	COVER	1
25	9S4191	PLUG	1
26	3J1907	SEAL	1
27	5J1356	SEAL	1
28	L1351	BOLT	1
29	5J5793	BOLT-(2" long)	1
30	5J5794	BOLT-(3.5" long)	2
31	4K5175	BOLT-(1.5" long)	3
32	5J9930	MANIFOLD	1
33	6J1029	COVER ASSEM.	1
34	5J3140	GASKET	1
35	6J1053	GASKET	1
36	6J1054	PLATE	1
37	4B4278	WASHER	8
38	S1588	BOLT	8

ONLY "CATERPILLAR" PARTS GIVE "CATERPILLAR" PERFORMANCE

REF. NO.	PART NUMBER	DESCRIPTION	QTY
1	4K1557	GASKET	1
2	6F4855	SEAL	2
3	7J5581	BOLT	1
4	9S8001	PLUG	1
5	2J2864	PLUG	1
6	6F5559	SEAL	1
7	6J3953	COVER	1
8	4J7533	SEAL	1
9	6K3879	ELBOW	1

REF. NO.	PART NUMBER	DESCRIPTION	QTY
10	3B4508	LOCKWASHER	6
11	6J7366	CAP	1
12	7J2026	CONTROL VALVE GROUP (See Separate Illustration)	1

13	9S8005	PLUG	1
14	3K360	SEAL	1
15	5J2910	TUBE ASSEM. -(7.00" long overall)-	1
16	S1591	BOLT	2
17	3B4506	LOCKWASHER	13
18	3J4407	SEAL	2
19	5J3541	LEVER ASSEM.	1
20	S509	BOLT	1
21	6J1996	STRAP	1
22	S1588	BOLT	1
23	L1351	BOLT	1
24	1A2209	BOLT	1
25	3J7582	LEVER	1
26	1B8707	KEY	1
27	7F7983	BEARING	4
28	7M2360	SPACER	1
29	6J1991	TUBE ASSEM. -(39.19" long overall)-	1
30	1A2029	BOLT	8
31	7J7678	HOSE--------(3.38" long)	1
	4M7139	CLAMP	2
32	2H5746	ADAPTER	1
33	8B4037	WASHER	2
34	5J880	HOUSING	1
35	4J8425	GASKET	1
36	7J4122	LEVER ASSEM.	1
37	9S1366	BOLT	4
38	5J1357	SEAL	2
39	3R2425	GASKET	1
40	7J4151	CONTROL VALVE GROUP (See Separate Illustration)	1
41	6J468	INDICATOR ASSEM.	1
	2M9780	SEAL	1
42	7J9938	SCREEN ASSEM.	1

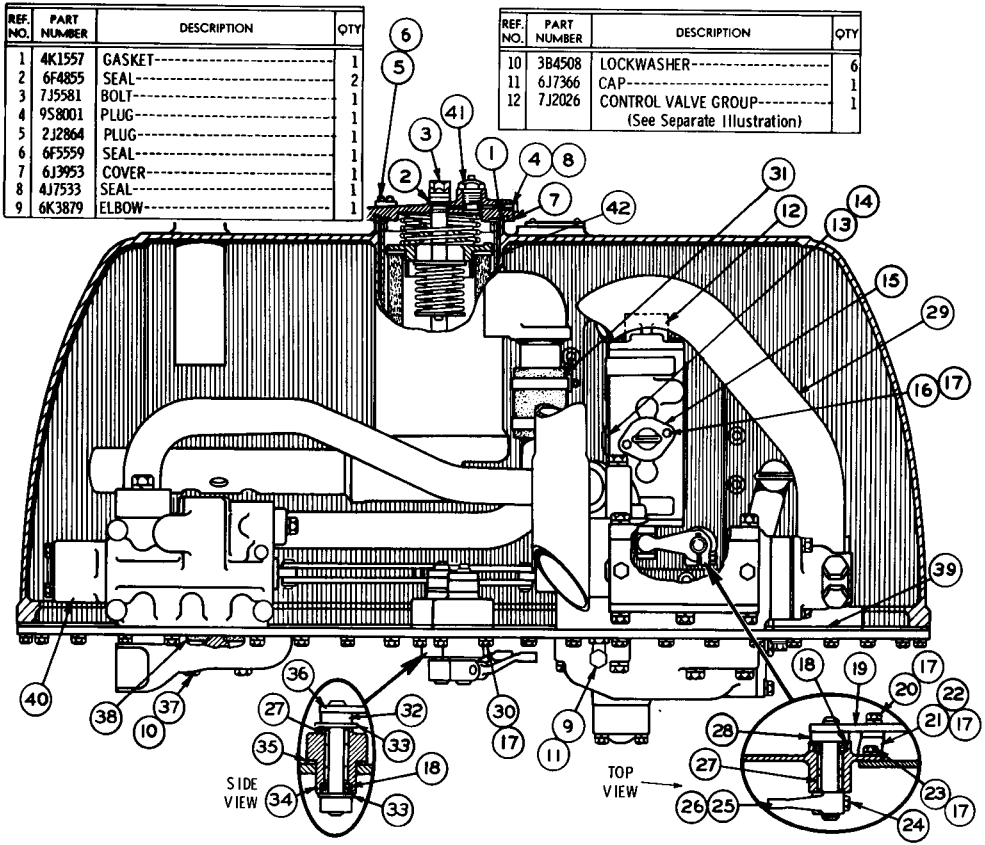

5J3691 TANK AND VALVE GROUP—As Viewed from Right Hand Side of Tractor—Part 2 of 3
183 & 193 Hydraulic Controls Serial No. 28H10852 to 28H12745 inclusive
7J2026 and 7J4151 Valve parts are shown on Pages 17A & 17B

5J3691 TANK AND VALVE GROUP—As Viewed from Right Hand Side of Tractor—Part 3 of 3

183 & 193 Hydraulic Controls Serial No. 28H10852 to 28H12745 inclusive

5J3263 & 5J3039 Valve parts are shown on Pages 15B & 16A

REF. NO.	PART NUMBER	DESCRIPTION	QTY
1	2J917	RETAINER	1
2	4J6064	ELEMENT ASSEM. (Disposable)	1
3	5J1473	SEAT	1
4	2J918	VALVE	1
5	2J8455	SPRING (Inner)	1
6	2M6831	PLATE (Serial Number)	1
7	2J6114	SPRING (Outer)	1
8	5J2926	SPRING	1
9	1H1200	PIN	1
10	5J2871	TUBE ASSEM. -(23.45" long overall)-	1

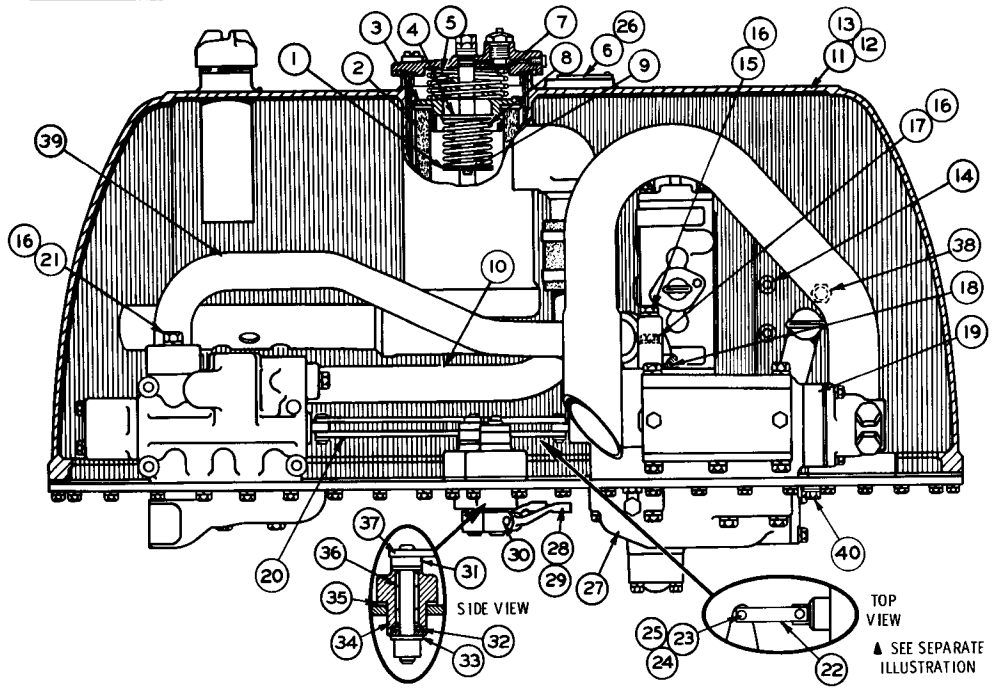

REF. NO.	PART NUMBER	DESCRIPTION	QTY
11	7J2772	TANK ASSEM.	1
12	2J2411	BLOCK	1
13	5J96	STUD	4
14	6J2237	BOSS	18
		(Parts of 7J2772 Assem.)	
15	1D4566	BOLT	1
16	3B4508	LOCKWASHER	2
17	1A1460	BOLT	1
18	4J523	SEAL	1
▲ 19	5J3039	CONTROL VALVE GROUP	1
20	7J4123	LINK	2
21	S1587	BOLT	2
22	7J2378	LINK	2
23	5F9199	PIN	4
24	8S7803	RETAINER	4
25	7H3912	BUSHING	2
26	4B9158	SCREW	2
▲ 27	5J3263	RELIEF VALVE GROUP	1
28	5J3200	LEVER	2
29	1B8706	KEY	2
30	S1588	BOLT	2
31	2H5746	ADAPTER	1
32	3J4407	SEAL	1
33	8B4037	WASHER	1
34	5J880	HOUSING	1
35	4J8425	GASKET	1
36	7F7983	BEARING	2
37	5J3117	LEVER ASSEM.	1
38	3K8460	PLUG	1
	1J9671	SEAL	1
39	7J1247	TUBE ASSEM.	1
	S1594	BOLT	1
40	5L5840	WASHER (▭)	1
	5B9628	WASHER (▭)	1

▲ SEE SEPARATE ILLUSTRATION

133424

ONLY "CATERPILLAR" PARTS GIVE "CATERPILLAR" PERFORMANCE

REF. NO.	PART NUMBER	DESCRIPTION	QTY
1	2J2521	STRAINER ASSEM.	1
2	6H5139	PLATE	1

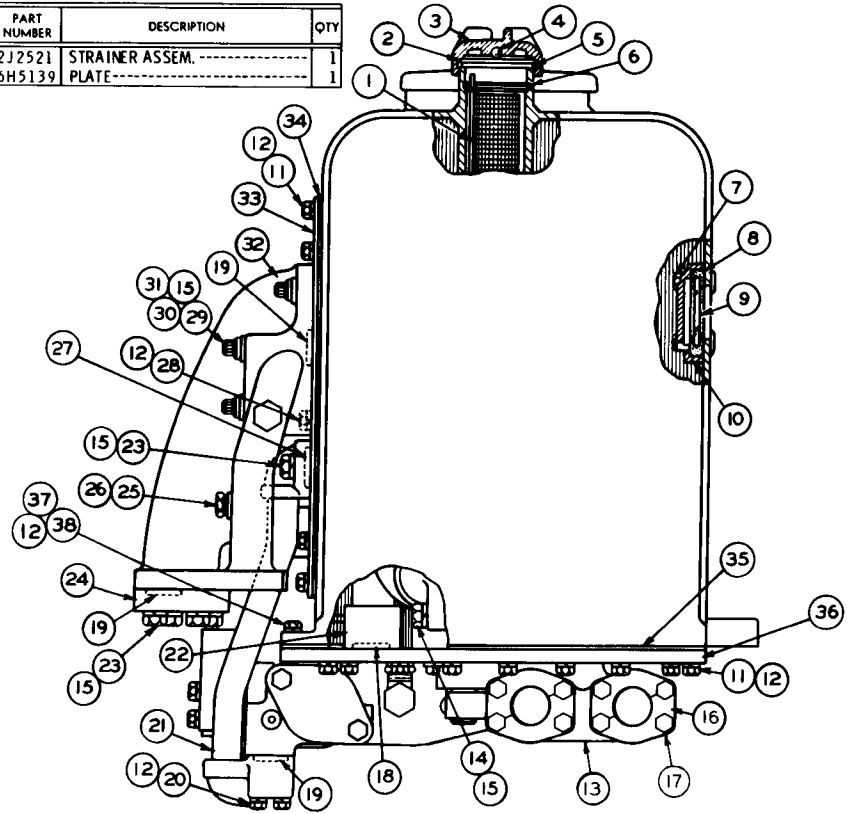

3	7H1447	CAP	1
4	7B6368	BALL	1
5	9H6454	GASKET	1
6	6H9361	RING	1
7	4J8265	NUT	4
8	4J8251	GROMMET	1
9	4J8252	GLASS	1
10	4J8250	RETAINER	1
11	1A2029	BOLT	60
12	3B4506	LOCKWASHER	76
13	5J3136	MANIFOLD	1
14	9S1366	BOLT	2
15	3B4508	LOCKWASHER	14
C 16	1P4578	FLANGE	4
C 17	T772	BOLT	8
18	8F3469	SEAL	2
19	5J1584	SEAL	6
20	S1590	BOLT	4
21	5J3480	TUBE ASSEM.	1
22	6J1942	TUBE ASSEM.	1
23	S1585	BOLT	6
24	5J3545	COVER	1
25	9S4191	PLUG	1
26	3J1907	SEAL	1
27	5J1356	SEAL	1
28	L1351	BOLT	1
29	5J5793	BOLT (2" long)	1
30	5J5794	BOLT (3.5" long)	2
31	4K5175	BOLT (1.5" long)	3
32	5J9930	MANIFOLD	1
33	6J1029	COVER ASSEM.	1
34	5J3140	GASKET	1
35	6J1053	GASKET	1
36	6J1054	PLATE	1
37	4B4278	WASHER	8
38	S1588	BOLT	8

C INDICATES CHANGE

141525

5J3691 TANK AND VALVE GROUP—As Viewed from Rear of Tractor—Part 1 of 3
183 & 193 Hydraulic Controls Serial No. 28H12746 to 28H13238 inclusive
8S9785 Complete Gasket Kit is available

5J3691 TANK AND VALVE GROUP—As Viewed from Right Hand Side of Tractor—Part 2 of 3
183 & 193 Hydraulic Controls Serial No. 28H12746 to 28H13238 inclusive
8J8432 and 7J2026 Valve parts are shown on Pages 8F and 17A

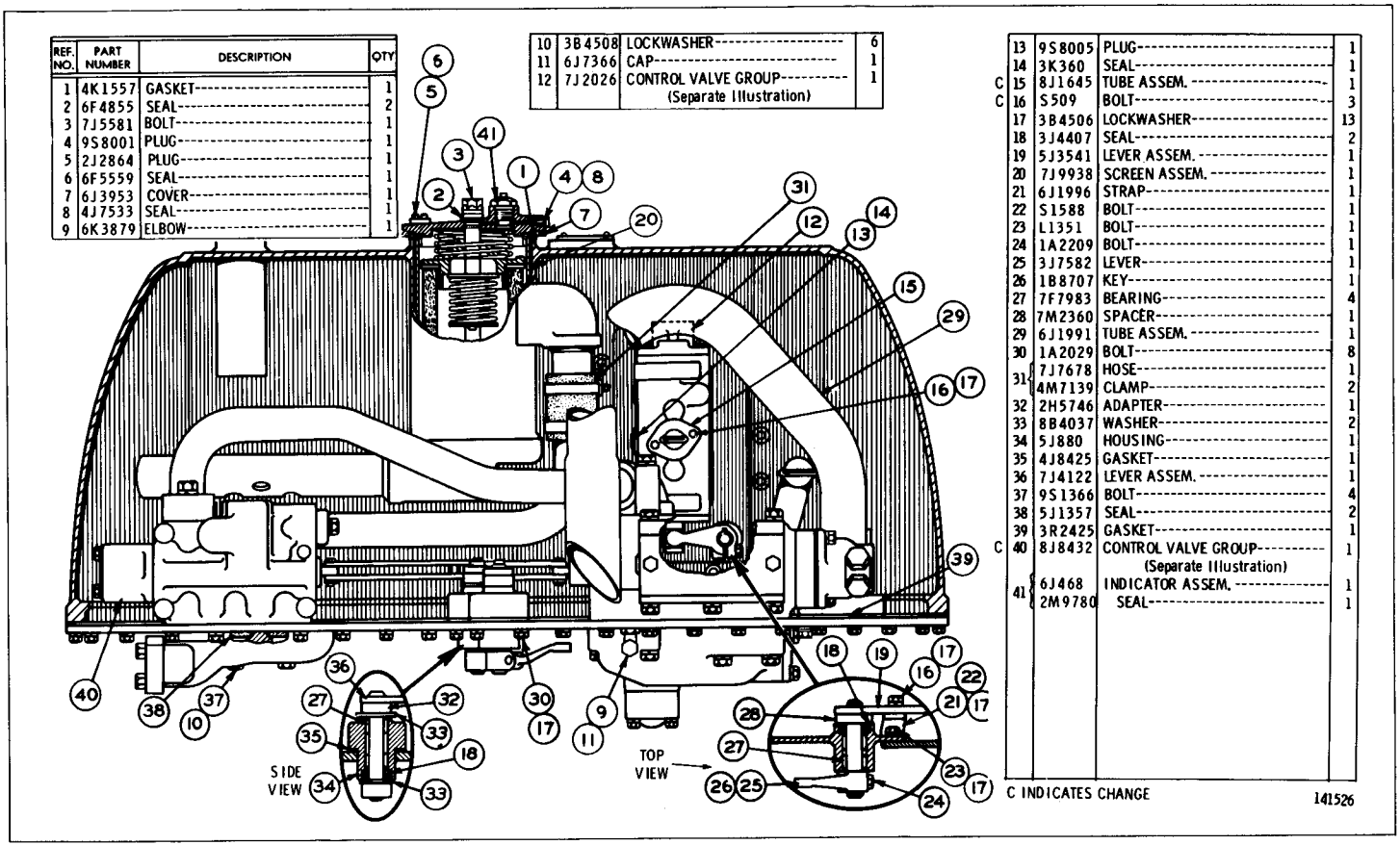

REF. NO.	PART NUMBER	DESCRIPTION	QTY
1	4K1557	GASKET	1
2	6F4855	SEAL	2
3	7J5581	BOLT	1
4	9S8001	PLUG	1
5	2J2864	PLUG	1
6	6F5559	SEAL	1
7	6J3953	COVER	1
8	4J7533	SEAL	1
9	6K3879	ELBOW	1
10	3B4508	LOCKWASHER	6
11	6J7366	CAP	1
12	7J2026	CONTROL VALVE GROUP (Separate Illustration)	1

	13	9S8005	PLUG	1
	14	3K360	SEAL	1
C	15	8J1645	TUBE ASSEM.	1
C	16	S509	BOLT	3
	17	3B4506	LOCKWASHER	13
	18	3J4407	SEAL	2
	19	5J3541	LEVER ASSEM.	1
	20	7J9938	SCREEN ASSEM.	1
	21	6J1996	STRAP	1
	22	S1588	BOLT	1
	23	L1351	BOLT	1
	24	1A2209	BOLT	1
	25	3J7582	LEVER	1
	26	1B8707	KEY	1
	27	7F7983	BEARING	4
	28	7M2360	SPACER	1
	29	6J1991	TUBE ASSEM.	1
	30	1A2029	BOLT	8
	31	7J7678	HOSE	1
		4M7139	CLAMP	2
	32	2H5746	ADAPTER	1
	33	8B4037	WASHER	2
	34	5J880	HOUSING	1
	35	4J8425	GASKET	1
	36	7J4122	LEVER ASSEM.	1
	37	9S1366	BOLT	4
	38	5J1357	SEAL	2
	39	3R2425	GASKET	1
C	40	8J8432	CONTROL VALVE GROUP (Separate Illustration)	1
	41	6J468	INDICATOR ASSEM.	1
		2M9780	SEAL	1

C INDICATES CHANGE

141526

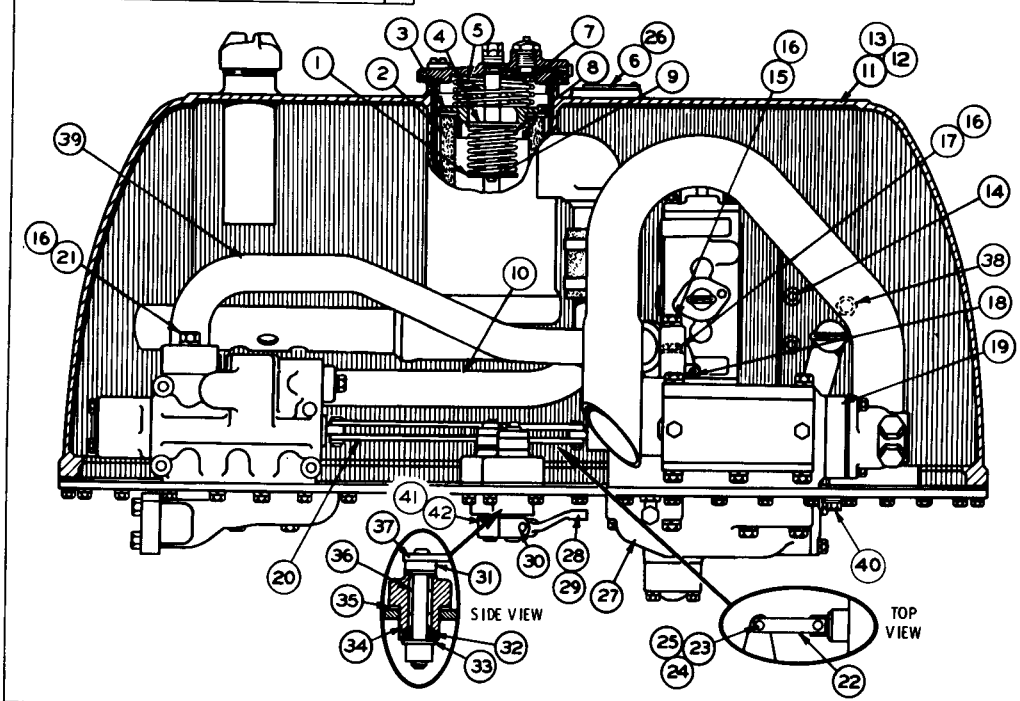

REF. NO.	PART NUMBER	DESCRIPTION	QTY
1	2J917	RETAINER	1
2	4J6064	ELEMENT ASSEM. (Disposable)	1
3	5J1473	SEAT	1
4	2J918	VALVE	1
5	2J8455	SPRING (Inner)	1
6	2M6831	PLATE (Serial Number)	1
7	2J6114	SPRING (Outer)	1
8	5J2926	SPRING	1
9	1H1200	PIN	1
10	5J2871	TUBE ASSEM.	1

	11	7J2772	TANK ASSEM.	1
	12	2J2411	BLOCK	1
	13	5J96	STUD	4
	14	6J2237	BOSS	18
	15	1D4566	BOLT	1
	16	3B4508	LOCKWASHER	2
	17	1A1460	BOLT	1
	18	4J523	SEAL	1
	19	5J3039	CONTROL VALVE GROUP (Separate Illustration)	1
	20	7J4123	LINK	2
	21	S1587	BOLT	2
	22	7J2378	LINK	2
	23	5F9199	PIN	4
	24	8S7803	RETAINER	4
	25	7H3912	BUSHING	2
	26	4B9158	SCREW	2
	27	5J3263	RELIEF VALVE GROUP (Separate Illustration)	1
C	28	5J3200	LEVER	1
	29	1B8706	KEY	2
C	30	S1588	BOLT	1
	31	2H5746	ADAPTER	1
	32	3J4407	SEAL	1
	33	3B4037	WASHER	1
C	34	8J7240	HOUSING	1
	35	4J8425	GASKET	1
	36	7F7983	BEARING	2
	37	5J3117	LEVER ASSEM.	1
	38	3K8460	PLUG	1
		1J9671	SEAL	1
	39	7J1247	TUBE ASSEM.	1
	40	S1594	BOLT	1
		5L5840	WASHER	1
		5B9628	WASHER	1
C	41	1P4871	LEVER	1
	42	S1590	BOLT	1
C		1D4717	NUT	1
		3B4506	LOCKWASHER	1

C INDICATES CHANGE 141527

5J3691 TANK AND VALVE GROUP—As Viewed from Right Hand Side of Tractor—Part 3 of 3
183 & 193 Hydraulic Controls Serial No. 28H12746 to 28H13238 inclusive
5J3263 & 5J3039 Valve parts are shown on Pages 15 & 16

5J3691 TANK AND VALVE GROUP—As Viewed from Rear of Tractor—Part 1 of 3
183 and 193 Hydraulic Controls Serial No. 28H13239 to 28H13813 inclusive
8S9785 Complete Gasket Kit is available

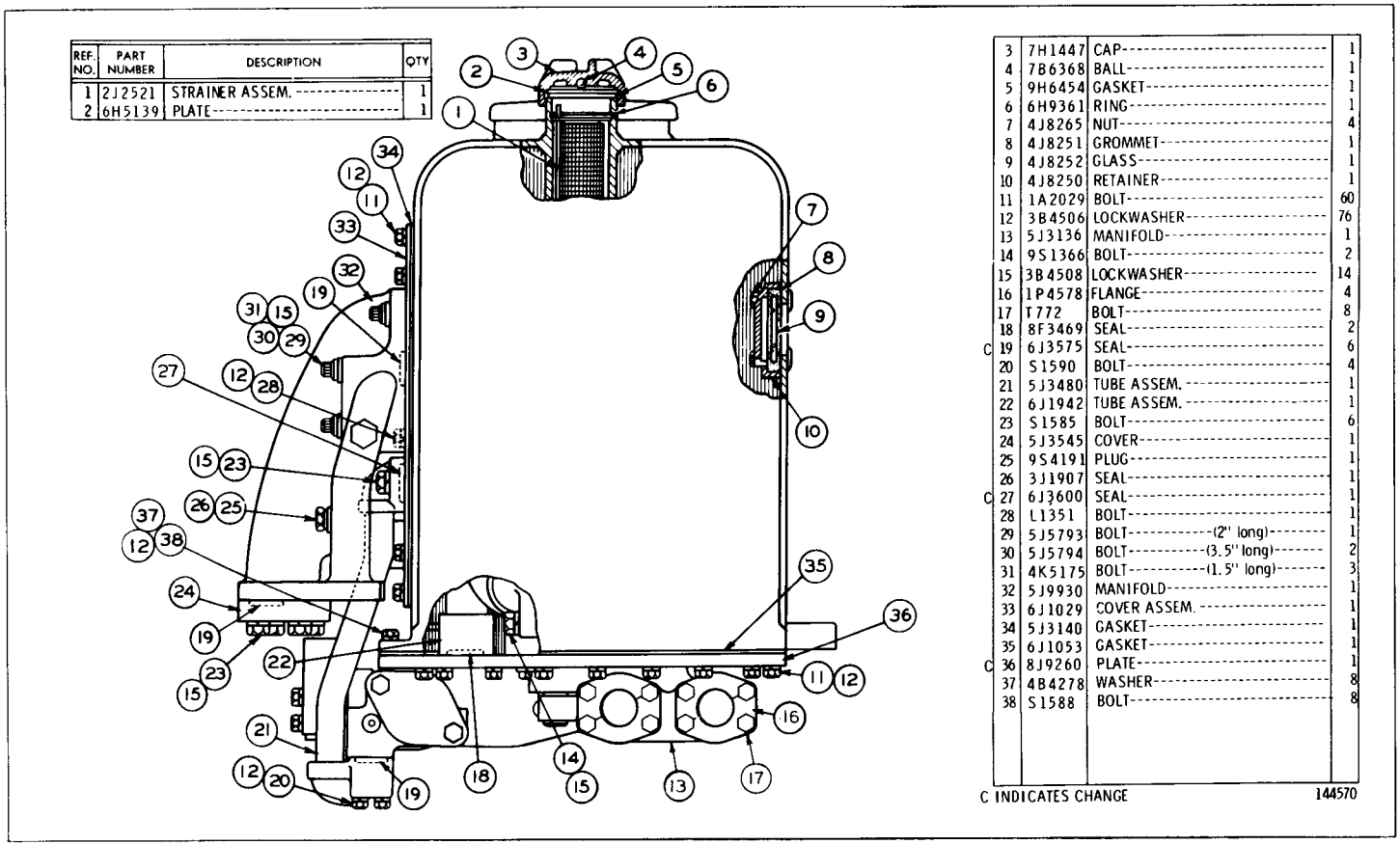

REF. NO.	PART NUMBER	DESCRIPTION	QTY
1	2J2521	STRAINER ASSEM.	1
2	6H5139	PLATE	1

3	7H1447	CAP	1
4	7B6368	BALL	1
5	9H6454	GASKET	1
6	6H9361	RING	1
7	4J8265	NUT	4
8	4J8251	GROMMET	1
9	4J8252	GLASS	1
10	4J8250	RETAINER	1
11	1A2029	BOLT	60
12	3B4506	LOCKWASHER	76
13	5J3136	MANIFOLD	1
14	9S1366	BOLT	2
15	3B4508	LOCKWASHER	14
16	1P4578	FLANGE	4
17	T772	BOLT	8
18	8F3469	SEAL	2
C 19	6J3575	SEAL	6
20	S1590	BOLT	4
21	5J3480	TUBE ASSEM.	1
22	6J1942	TUBE ASSEM.	1
23	S1585	BOLT	6
24	5J3545	COVER	1
25	9S4191	PLUG	1
26	3J1907	SEAL	1
C 27	6J3600	SEAL	1
28	L1351	BOLT	1
29	5J5793	BOLT—(2" long)	1
30	5J5794	BOLT—(3.5" long)	2
31	4K5175	BOLT—(1.5" long)	3
32	5J9930	MANIFOLD	1
33	6J1029	COVER ASSEM.	1
34	5J3140	GASKET	1
35	6J1053	GASKET	1
C 36	8J9260	PLATE	1
37	4B4278	WASHER	8
38	S1588	BOLT	8

C INDICATES CHANGE

144570

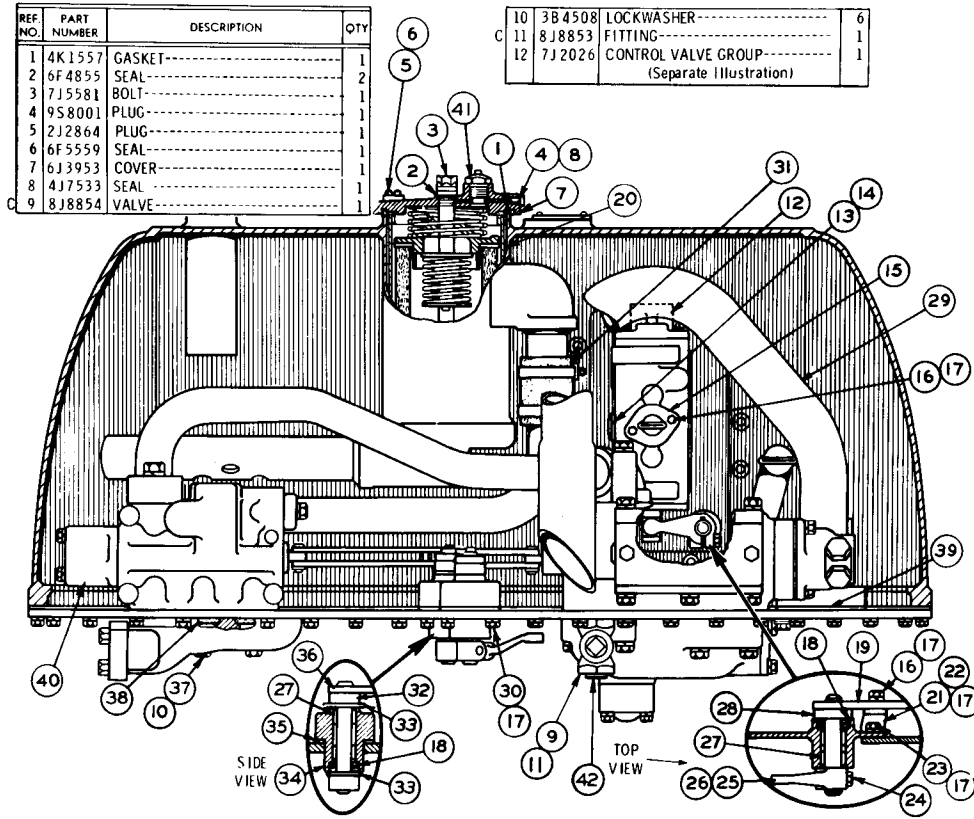

REF. NO.	PART NUMBER	DESCRIPTION	QTY
1	4K1557	GASKET	1
2	6F4855	SEAL	2
3	7J5581	BOLT	1
4	9S8001	PLUG	1
5	2J2864	PLUG	1
6	6F5559	SEAL	1
7	6J3953	COVER	1
8	4J7533	SEAL	1
C 9	8J8854	VALVE	1
10	3B4508	LOCKWASHER	6
C 11	8J8853	FITTING	1
12	7J2026	CONTROL VALVE GROUP (Separate Illustration)	1
13	9S8005	PLUG	1
14	3K360	SEAL	1
15	8J1645	TUBE ASSEM.	1
16	S509	BOLT	3
17	3B4506	LOCKWASHER	13
18	3J4407	SEAL	2
19	5J3541	LEVER ASSEM.	1
20	7J9938	SCREEN ASSEM.	1
21	6J1996	STRAP	1
22	S1588	BOLT	1
23	L1351	BOLT	1
24	1A2209	BOLT	1
25	3J7582	LEVER	1
26	1B8707	KEY	1
27	7F7983	BEARING	4
28	7M2360	SPACER	1
29	6J1991	TUBE ASSEM.	1
30	1A2029	BOLT	8
31	7J7678	HOSE	1
	4M7139	CLAMP	2
32	2H5746	ADAPTER	1
33	8B4037	WASHER	2
34	5J880	HOUSING	1
35	4J8425	GASKET	1
36	7J4122	LEVER ASSEM.	1
37	9S1366	BOLT	4
C 38	6J3625	SEAL	2
39	3R2425	GASKET	1
40	8J8432	CONTROL VALVE GROUP (Separate Illustration)	1
41	6J468	INDICATOR ASSEM.	1
	2M9780	SEAL	1
C 42	3B551	PLUG	1

C INDICATES CHANGE

144571

5J3691 TANK AND VALVE GROUP—As Viewed from Right Hand Side of Tractor—Part 2 of 3
183 and 193 Hydraulic Controls Serial No. 28H13239 to 28H13813 inclusive
8J8432 and 7J2026 Valve parts are shown on Pages 8F and 17A

5J3691 TANK AND VALVE GROUP—As Viewed from Right Hand Side of Tractor—Part 3 of 3
183 and 193 Hydraulic Controls Serial No. 28H13239 to 28H13813 inclusive
5J3263 and 5J3039 Valve parts are shown on Pages 15B and 16A

REF. NO.	PART NUMBER	DESCRIPTION	QTY
1	2J917	RETAINER	1
2	4J6064	ELEMENT ASSEM. (Disposable)	1
3	5J1473	SEAT	1
4	2J918	VALVE	1
5	2J8455	SPRING (Inner)	1
6	2M6831	PLATE (Serial Number)	1
7	2J6114	SPRING (Outer)	1
8	5J2926	SPRING	1
9	1H1200	PIN	1
10	5J2871	TUBE ASSEM.	1

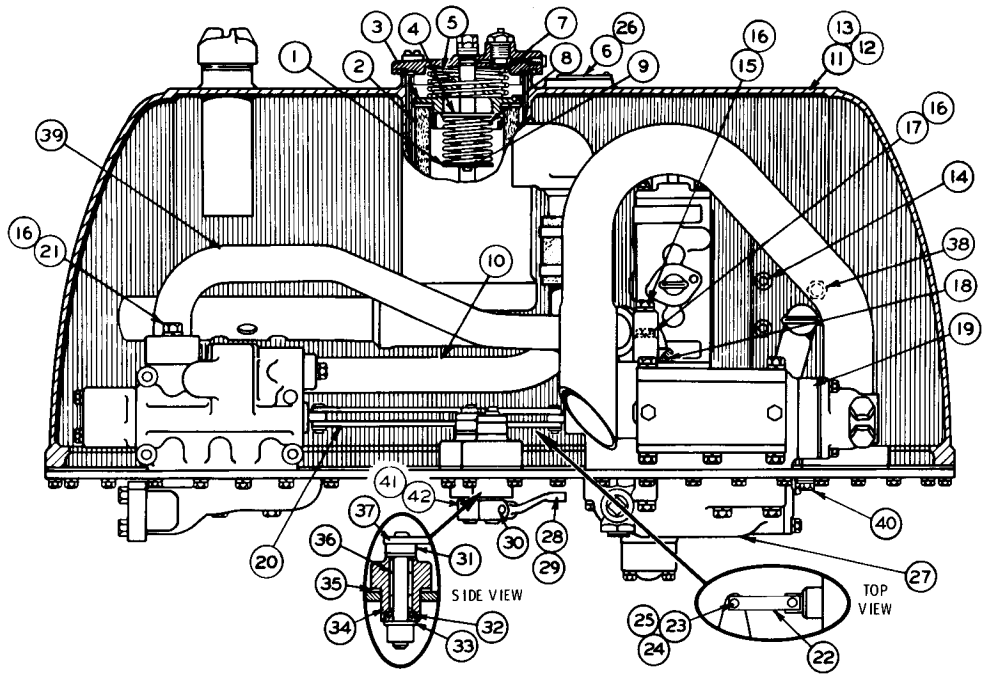

11	7J2772	TANK ASSEM.	1
12	2J2411	BLOCK	1
13	5J96	STUD	4
14	6J2237	BOSS	18
15	1D4566	BOLT	1
16	3B4508	LOCKWASHER	2
17	1A1460	BOLT	1
18	4J523	SEAL	1
19	5J3039	CONTROL VALVE GROUP (Separate Illustration)	1
20	7J4123	LINK	2
21	S1587	BOLT	2
22	7J2378	LINK	2
23	5F9199	PIN	4
24	8S7803	RETAINER	4
25	7H3912	BUSHING	2
26	4B9158	SCREW	2
27	5J3263	RELIEF VALVE GROUP (Separate Illustration)	1
28	5J3200	LEVER	1
29	1B8706	KEY	2
30	S1588	BOLT	1
31	2H5746	ADAPTER	1
32	3J4407	SEAL	1
33	3B4037	WASHER	1
34	8J7240	HOUSING	1
35	4J8425	GASKET	1
36	7F7983	BEARING	2
37	5J3117	LEVER ASSEM.	1
38	3K8460	PLUG	1
	1J9671	SEAL	1
39	7J1247	TUBE ASSEM.	1
	S1594	BOLT	1
40	5L5840	WASHER	1
	5B9628	WASHER	1
41	1P4871	LEVER	1
	S1590	BOLT	1
42	1D4717	NUT	1
	3B4506	LOCKWASHER	1

144572

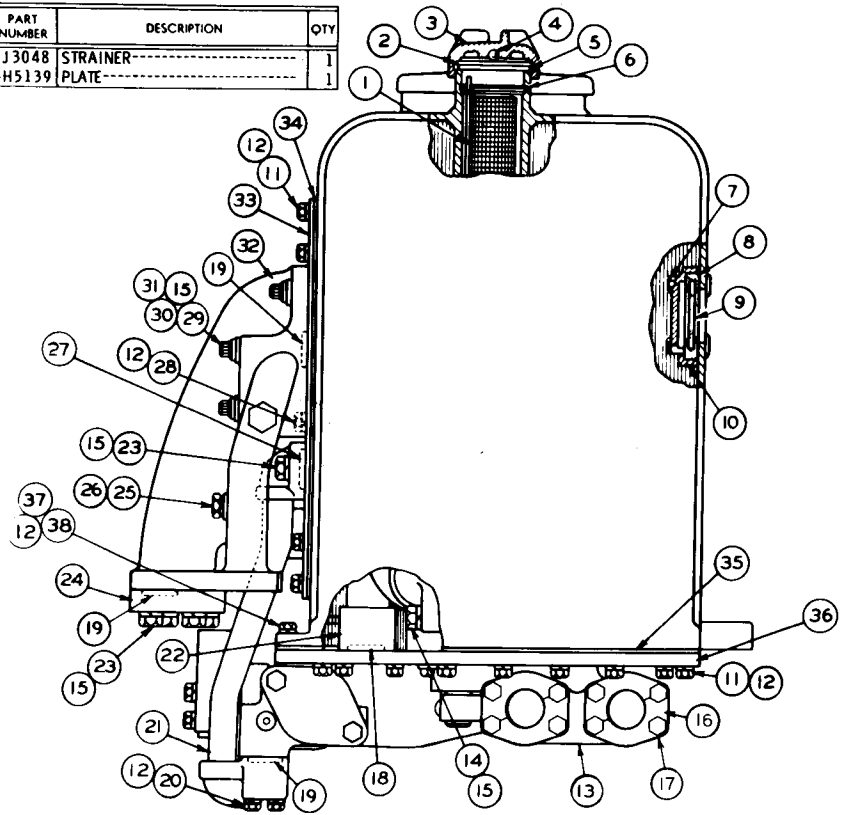

REF. NO.	PART NUMBER	DESCRIPTION	QTY
C 1	9J3048	STRAINER	1
2	6H5139	PLATE	1

3	7H1447	CAP	1
4	7B6368	BALL	1
5	9H6454	GASKET	1
C 6	5K216	SEAL	1
7	4J8265	NUT	4
8	4J8251	GROMMET	1
9	4J8252	GLASS	1
10	4J8250	RETAINER	1
11	1A2029	BOLT	60
12	3B4506	LOCKWASHER	76
13	5J3136	MANIFOLD	1
14	9S1366	BOLT	2
15	3B4508	LOCKWASHER	14
16	1P4578	FLANGE	4
17	T772	BOLT	8
18	8F3469	SEAL	2
19	6J3575	SEAL	6
20	S1590	BOLT	4
21	5J3480	TUBE ASSEM.	1
22	6J1942	TUBE ASSEM.	1
23	S1585	BOLT	6
24	5J3545	COVER	1
25	9S4191	PLUG	1
26	3J1907	SEAL	1
27	6J3600	SEAL	1
28	L1351	BOLT	1
29	5J5793	BOLT-----(2" long)	1
30	5J5794	BOLT-----(3.5" long)	2
31	4K5175	BOLT-----(1.5" long)	3
32	5J9930	MANIFOLD	1
33	6J1029	COVER ASSEM.	1
34	5J3140	GASKET	1
35	6J1053	GASKET	1
36	8J9260	PLATE	1
37	4B4278	WASHER	8
38	S1588	BOLT	8

C INDICATES CHANGE

147895

5J3691 TANK AND VALVE GROUP—As Viewed from Rear of Tractor—Part 1 of 3
183 and 193 Hydraulic Control Serial No. 28H13814—Up
8S9785 Complete Gasket Kit is available

5J3691 TANK AND VALVE GROUP—As Viewed from Right Hand Side of Tractor—Part 2 of 3
183 and 193 Hydraulic Control Serial No. 28H13814—Up
8J8432 and 7J2026 Valve parts are shown on Pages 8F and 17A

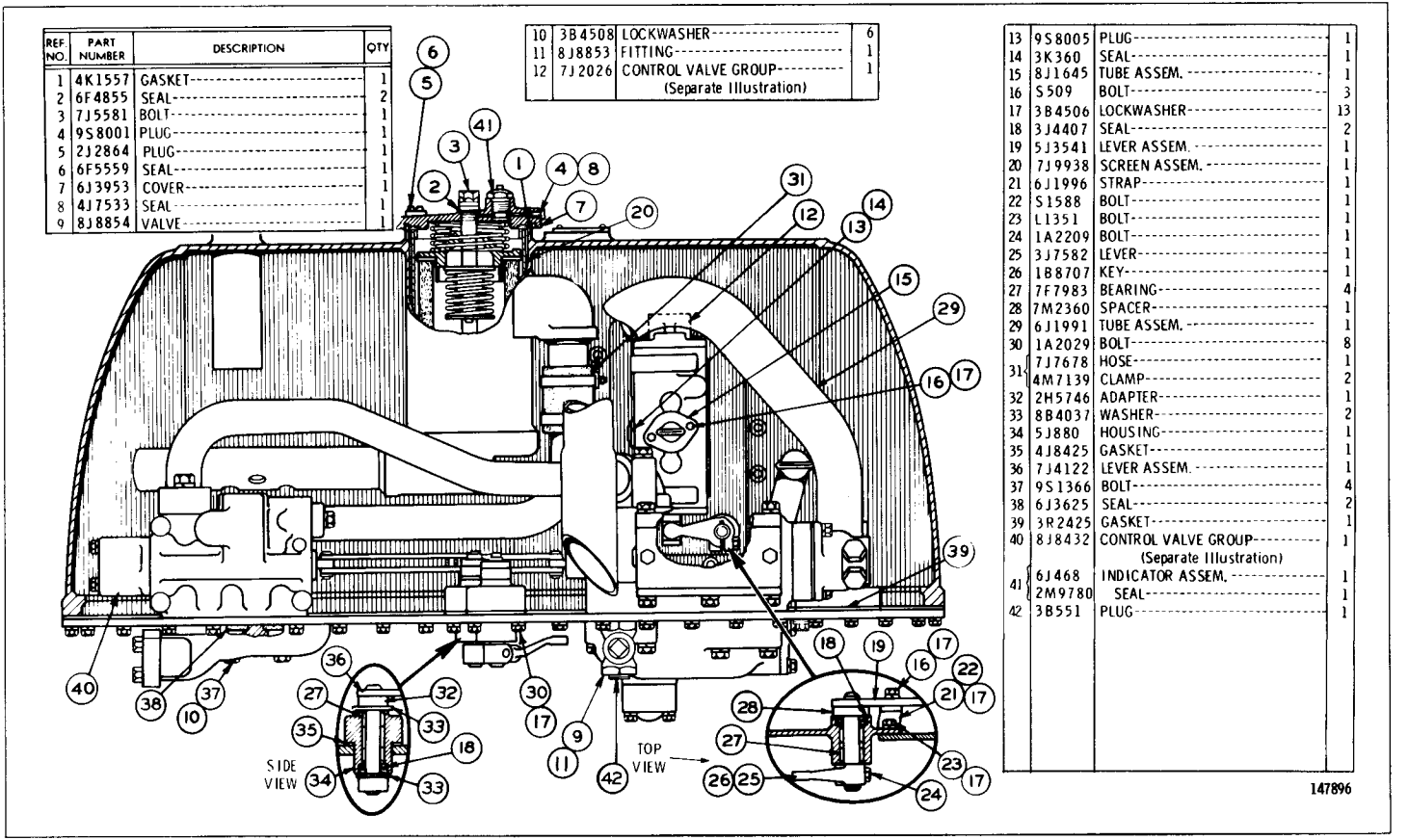

REF. NO.	PART NUMBER	DESCRIPTION	QTY
1	4K1557	GASKET	1
2	6F4855	SEAL	2
3	7J5581	BOLT	1
4	9S8001	PLUG	1
5	2J2864	PLUG	1
6	6F5559	SEAL	1
7	6J3953	COVER	1
8	4J7533	SEAL	1
9	8J8854	VALVE	1
10	3B4508	LOCKWASHER	6
11	8J8853	FITTING	1
12	7J2026	CONTROL VALVE GROUP (Separate Illustration)	1
13	9S8005	PLUG	1
14	3K360	SEAL	1
15	8J1645	TUBE ASSEM.	1
16	S509	BOLT	3
17	3B4506	LOCKWASHER	13
18	3J4407	SEAL	2
19	5J3541	LEVER ASSEM.	1
20	7J9938	SCREEN ASSEM.	1
21	6J1996	STRAP	1
22	S1588	BOLT	1
23	L1351	BOLT	1
24	1A2209	BOLT	1
25	3J7582	LEVER	1
26	1B8707	KEY	1
27	7F7983	BEARING	4
28	7M2360	SPACER	1
29	6J1991	TUBE ASSEM.	1
30	1A2029	BOLT	8
31	7J7678	HOSE	1
	4M7139	CLAMP	2
32	2H5746	ADAPTER	1
33	8B4037	WASHER	2
34	5J880	HOUSING	1
35	4J8425	GASKET	1
36	7J4122	LEVER ASSEM.	1
37	9S1366	BOLT	4
38	6J3625	SEAL	2
39	3R2425	GASKET	1
40	8J8432	CONTROL VALVE GROUP (Separate Illustration)	1
41	6J468	INDICATOR ASSEM.	1
	2M9780	SEAL	1
42	3B551	PLUG	1

REF. NO.	PART NUMBER	DESCRIPTION	QTY
1	2J917	RETAINER	1
2	4J6064	ELEMENT ASSEM. (Disposable)	1
3	5J1473	SEAT	1
4	2J918	VALVE	1
5	2J8455	SPRING (Inner)	1
6	2M6831	PLATE (Serial Number)	1
7	2J6114	SPRING (Outer)	1
8	5J2926	SPRING	1
9	1H1200	PIN	1
10	5J2871	TUBE ASSEM.	1
11	7J2772	TANK ASSEM.	1
12	2J2411	BLOCK	1
13	5J96	STUD	4
14	6J2237	BOSS	18
15	1D4566	BOLT	1
16	3B4508	LOCKWASHER	2
17	1A1460	BOLT	1
18	4J523	SEAL	1
19	5J3039	CONTROL VALVE GROUP (Separate Illustration)	1
20	7J4123	LINK	2
21	S1587	BOLT	2
22	7J2378	LINK	2
23	5F9199	PIN	4
24	8S7803	RETAINER	4
25	7H3912	BUSHING	2
26	4B9158	SCREW	2
27	5J3263	RELIEF VALVE GROUP (Separate Illustration)	1
28	5J3200	LEVER	1
29	1B8706	KEY	2
30	S1588	BOLT	1
31	2H5746	ADAPTER	1
32	3J4407	SEAL	1
33	3B4037	WASHER	1
34	8J7240	HOUSING	1
35	4J8425	GASKET	1
36	7F7983	BEARING	2
37	5J3117	LEVER ASSEM.	1
38	3K8460	PLUG	1
	1J9671	SEAL	1
39	7J1247	TUBE ASSEM.	1
	S1594	BOLT	1
40	5L5840	WASHER	1
	5B9628	WASHER	1
41	1P4871	LEVER	1
	S1590	BOLT	1
42	1D4717	NUT	1
	3B4506	LOCKWASHER	1

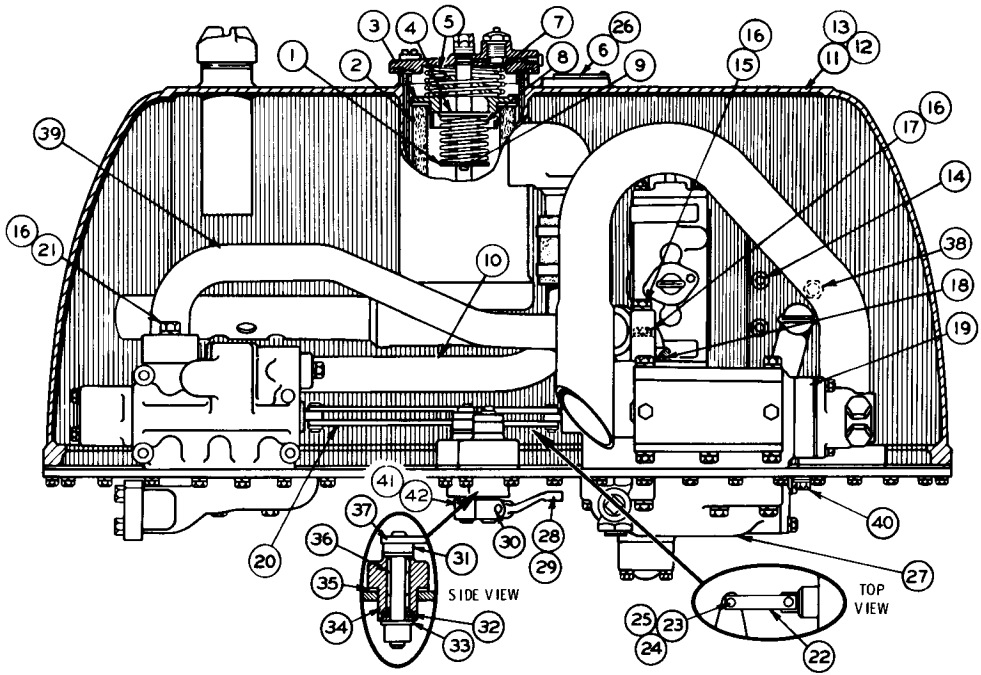

144572

5J3691 TANK AND VALVE GROUP—As Viewed from Right Hand Side of Tractor—Part 3 of 3
183 and 193 Hydraulic Control Serial No. 28H13814—Up
5J3263 and 5J3039 Valve parts are shown on Pages 15B and 16A

5J3691 TANK AND VALVE GROUP—As Viewed from Rear of Tractor—Part 1 of 3—Type 2
183 & 193 Hydraulic Control Serial No. 28H13814—Up
8S9785 Complete Gasket Kit is available

REF. NO.	PART NUMBER	DESCRIPTION	QTY
1	9J3048	STRAINER	1
2	6H5139	PLATE	1

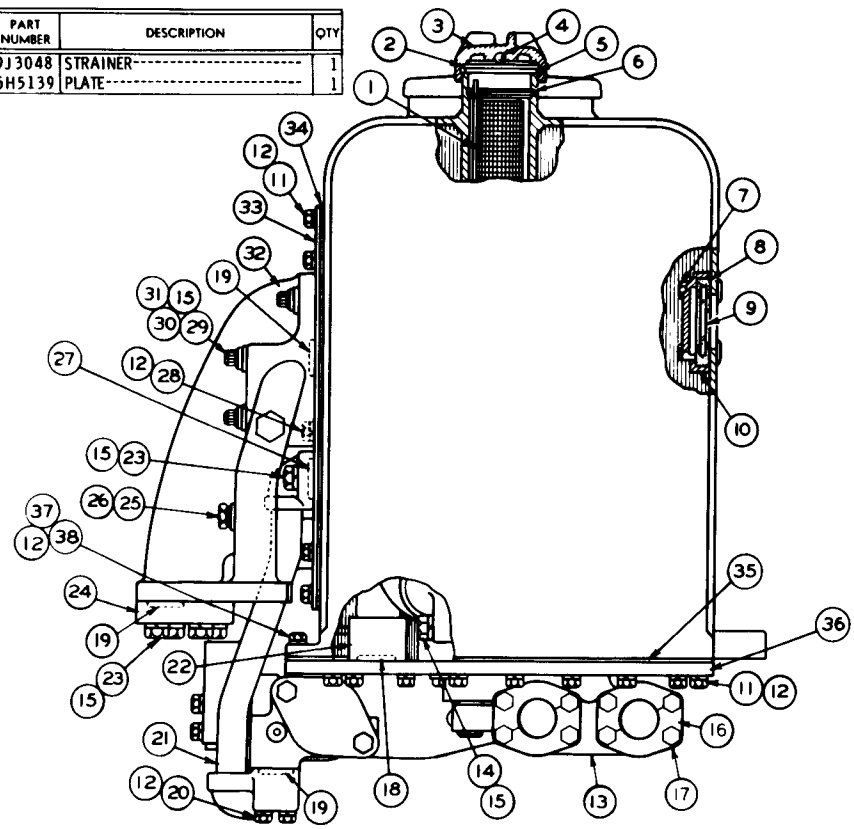

3	7H1447	CAP	1
4	7B6368	BALL	1
5	9H6454	GASKET	1
6	5K216	SEAL	1
7	4J8265	NUT	4
8	4J8251	GROMMET	1
9	4J8252	GLASS	1
10	4J8250	RETAINER	1
11	1A2029	BOLT	60
12	3B4506	LOCKWASHER	76
13	5J3136	MANIFOLD	1
14	9S1366	BOLT	2
15	3B4508	LOCKWASHER	14
16	1P4578	FLANGE	4
17	T772	BOLT	8
18	8F3469	SEAL	2
19	6J3575	SEAL	6
20	S1590	BOLT	4
21	5J3480	TUBE ASSEM.	1
22	6J1942	TUBE ASSEM.	1
23	S1585	BOLT	6
24	5J3545	COVER	1
25	9S4191	PLUG	1
26	3J1907	SEAL	1
27	6J3600	SEAL	1
28	L1351	BOLT	1
29	5J5793	BOLT-------50.80 mm(2 in.) long	1
30	5J5794	BOLT-----88.90 mm(3.5 in.) long	2
31	4K5175	BOLT-----38.10 mm(1.5 in.) long	3
32	5J9930	MANIFOLD	1
33	6J1029	COVER ASSEM.	1
34	5J3140	GASKET	1
35	6J1053	GASKET	1
36	8J9260	PLATE	1
37	4B4278	WASHER	8
38	S1588	BOLT	8

162386

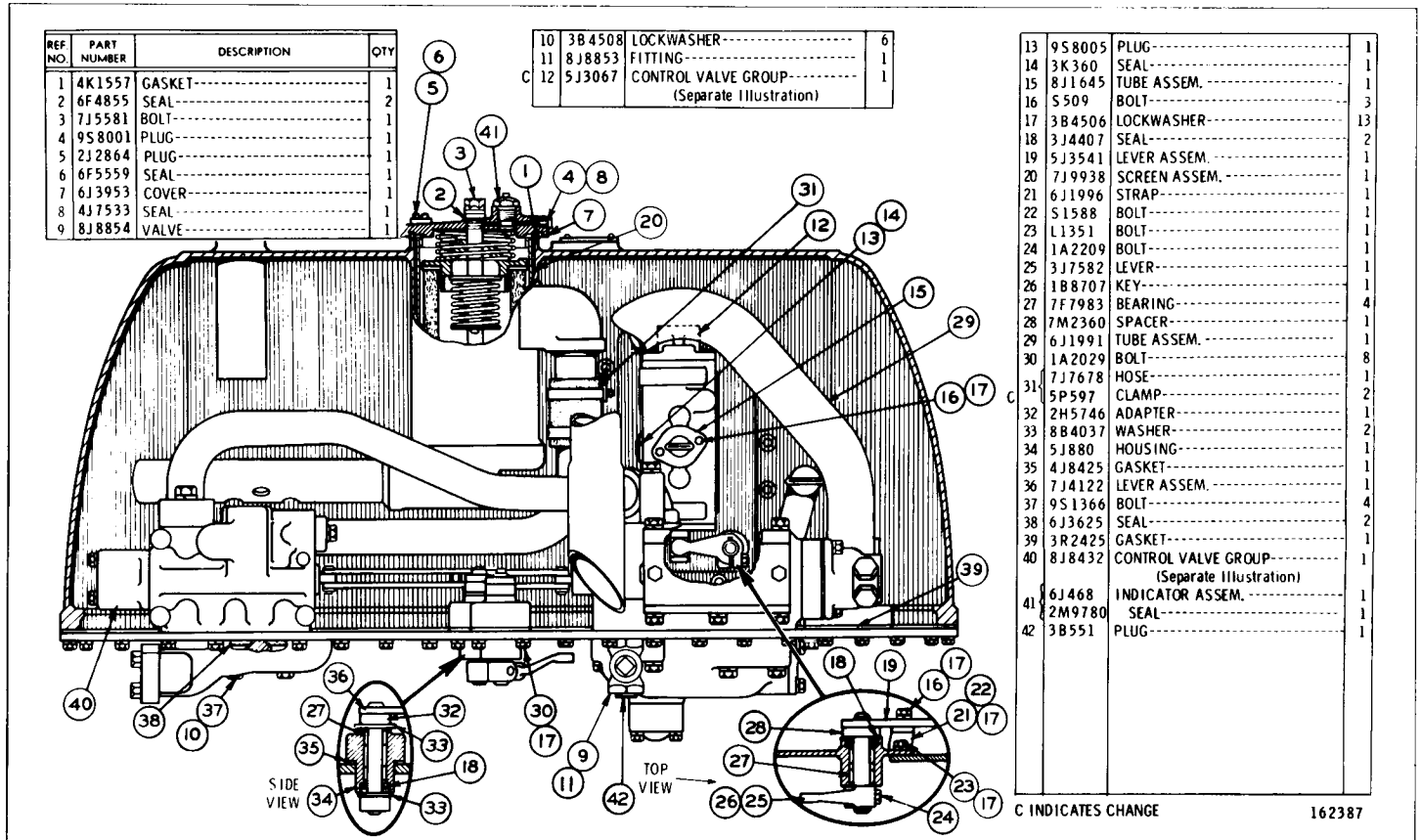

REF NO.	PART NUMBER	DESCRIPTION	QTY
1	4K1557	GASKET	1
2	6F4855	SEAL	2
3	7J5581	BOLT	1
4	9S8001	PLUG	1
5	2J2864	PLUG	1
6	6F5559	SEAL	1
7	6J3953	COVER	1
8	4J7533	SEAL	1
9	8J8854	VALVE	1
10	3B4508	LOCKWASHER	6
11	8J8853	FITTING	1
C 12	5J3067	CONTROL VALVE GROUP (Separate Illustration)	1
13	9S8005	PLUG	1
14	3K360	SEAL	1
15	8J1645	TUBE ASSEM.	1
16	S509	BOLT	3
17	3B4506	LOCKWASHER	13
18	3J4407	SEAL	2
19	5J3541	LEVER ASSEM.	1
20	7J9938	SCREEN ASSEM.	1
21	6J1996	STRAP	1
22	S1588	BOLT	1
23	L1351	BOLT	1
24	1A2209	BOLT	1
25	3J7582	LEVER	1
26	1B8707	KEY	1
27	7F7983	BEARING	4
28	7M2360	SPACER	1
29	6J1991	TUBE ASSEM.	1
30	1A2029	BOLT	8
31	7J7678	HOSE	1
	5P597	CLAMP	2
32	2H5746	ADAPTER	1
33	8B4037	WASHER	2
34	5J880	HOUSING	1
35	4J8425	GASKET	1
36	7J4122	LEVER ASSEM.	1
37	9S1366	BOLT	4
38	6J3625	SEAL	2
39	3R2425	GASKET	1
40	8J8432	CONTROL VALVE GROUP (Separate Illustration)	1
41	6J468	INDICATOR ASSEM.	1
	2M9780	SEAL	1
42	3B551	PLUG	1

C INDICATES CHANGE

162387

5J3691 TANK AND VALVE GROUP—As Viewed from R.H. Side of Tractor—Part 2 of 3—Type 2
183 & 193 Hydraulic Control Serial No. 28H13814—Up
8J8432 and 5J3067 Valve parts are shown on Pages 8F & 16C

5J3691 TANK AND VALVE GROUP—As Viewed from R.H. Side of Tractor—Part 3 of 3—Type 2
183 & 193 Hydraulic Control Serial No. 28H13814—Up
5J3263 & 5J3039 Valve parts are shown on Pages 15B and 16A

REF. NO.	PART NUMBER	DESCRIPTION	QTY
1	2J917	RETAINER	1
2	4J6064	ELEMENT ASSEM. -(Disposable)	1
3	5J1473	SEAT	1
4	2J918	VALVE	1
5	2J8455	SPRING-(Inner)	1
6	2M6831	PLATE-(Serial Number)	1
7	2J6114	SPRING-(Outer)	1
8	5J2926	SPRING	1
9	1H1200	PIN	1
10	5J2871	TUBE ASSEM.	1

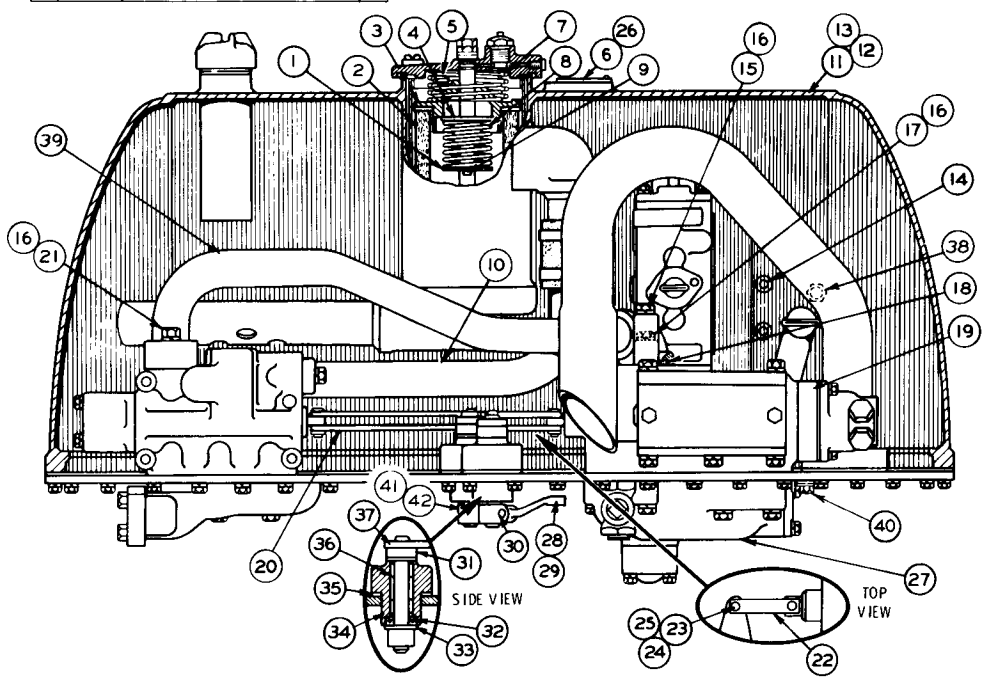

11	7J2772	TANK ASSEM.	1
12	2J2411	BLOCK	1
13	5J96	STUD	4
14	6J2237	BOSS	18
15	1D4566	BOLT	1
16	3B4508	LOCKWASHER	2
17	1A1460	BOLT	1
18	4J523	SEAL	1
19	5J3039	CONTROL VALVE GROUP (Separate Illustration)	1
20	7J4123	LINK	2
21	S1587	BOLT	2
22	7J2378	LINK	2
23	5F9199	PIN	4
24	8S7803	RETAINER	4
25	7H3912	BUSHING	2
26	4B9158	SCREW	2
27	5J3263	RELIEF VALVE GROUP (Separate Illustration)	1
28	5J3200	LEVER	1
29	1B8706	KEY	2
30	S1588	BOLT	1
31	2H5746	ADAPTER	1
32	3J4407	SEAL	1
33	3B4037	WASHER	1
34	8J7240	HOUSING	1
35	4J8425	GASKET	1
36	7F7983	BEARING	2
37	5J3117	LEVER ASSEM.	1
38	3K8460	PLUG	1
	1J9671	SEAL	1
39	7J1247	TUBE ASSEM.	1
40	S1594	BOLT	1
	5L5840	WASHER	1
	5B9628	WASHER	1
41	1P4871	LEVER	1
	S1590	BOLT	1
42	1D4717	NUT	1
	3B4506	LOCKWASHER	1

144572

5J3263 EXTERNAL RELIEF VALVE GROUP

Serial No. 27H1 to 27H6165 inclusive & 28H1 to 28H9224 inclusive

Part of 5J3693 & 5J3691 Tank & Valve Groups shown on Pages 10A, 10D, 10G, 10K, 10N, 10R, 10U, 10X, 14, 14C, 14F, 14J, 14M, 14Q, 14T & 14W

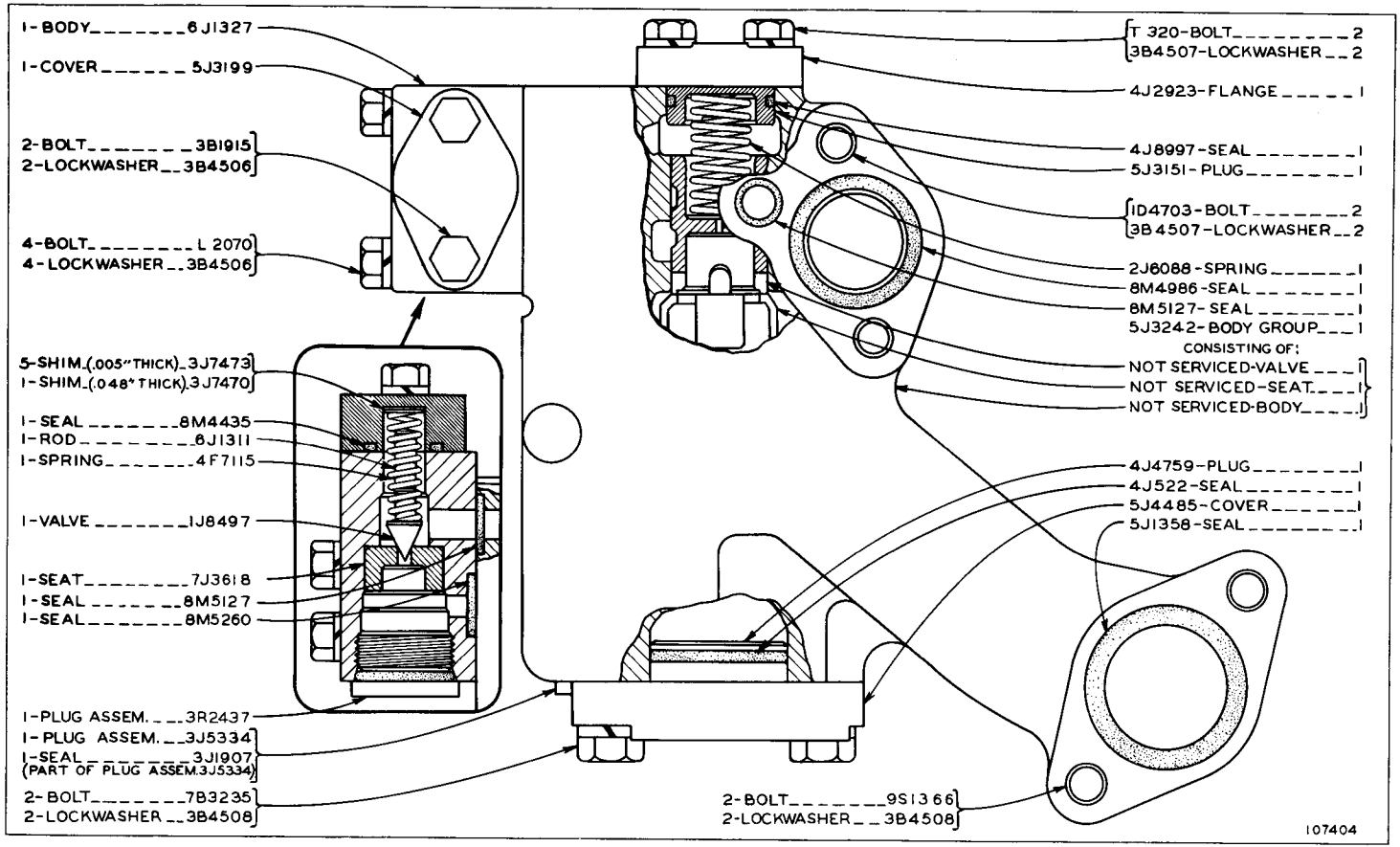

ONLY "CATERPILLAR" PARTS GIVE "CATERPILLAR" PERFORMANCE

5J3263 EXTERNAL RELIEF VALVE GROUP

Serial No. 27H6166—Up and 28H9225—Up

Part of 5J3693 and 5J3691 Tank and Valve Groups shown on Pages 10X, 14W and 14Z

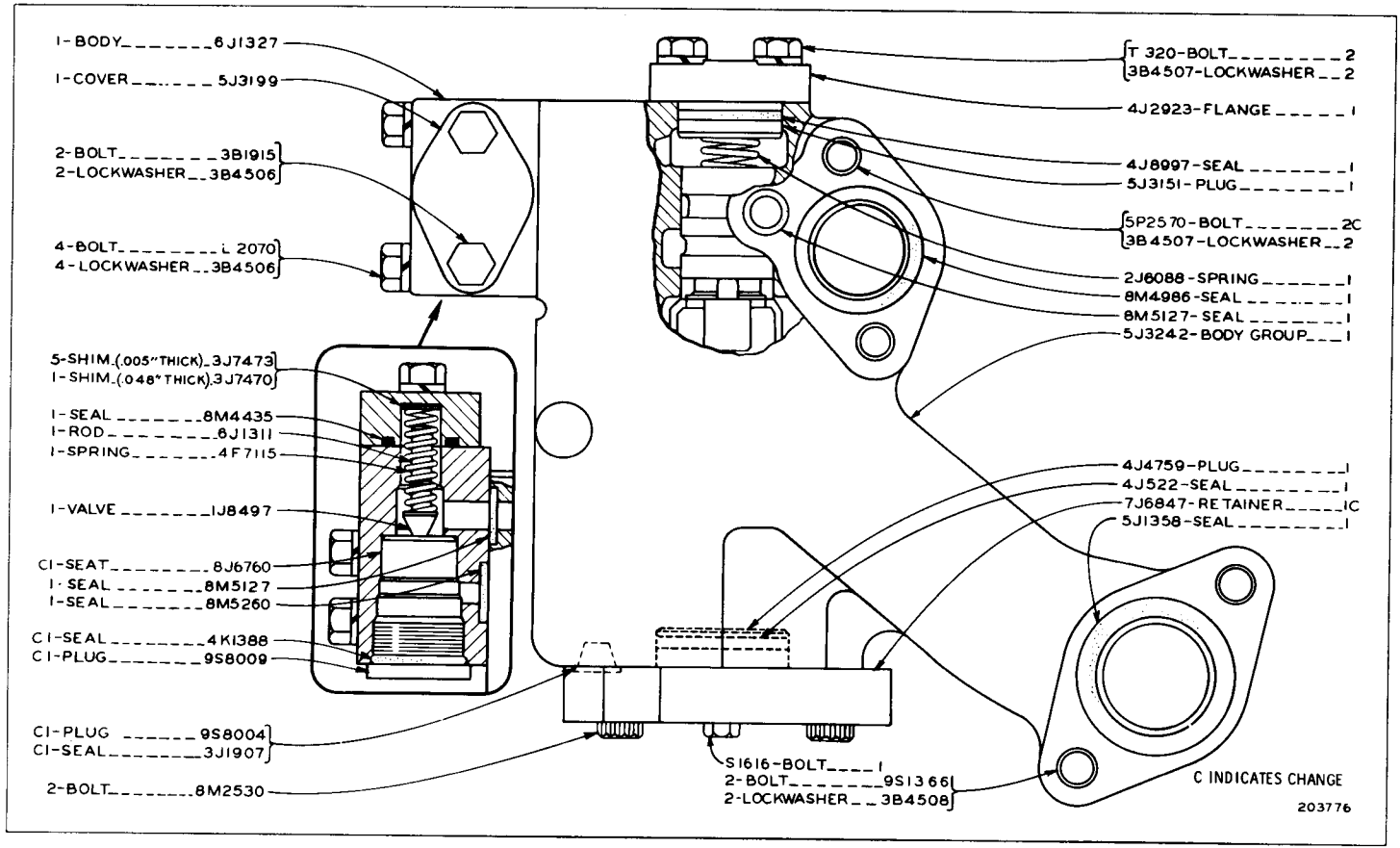

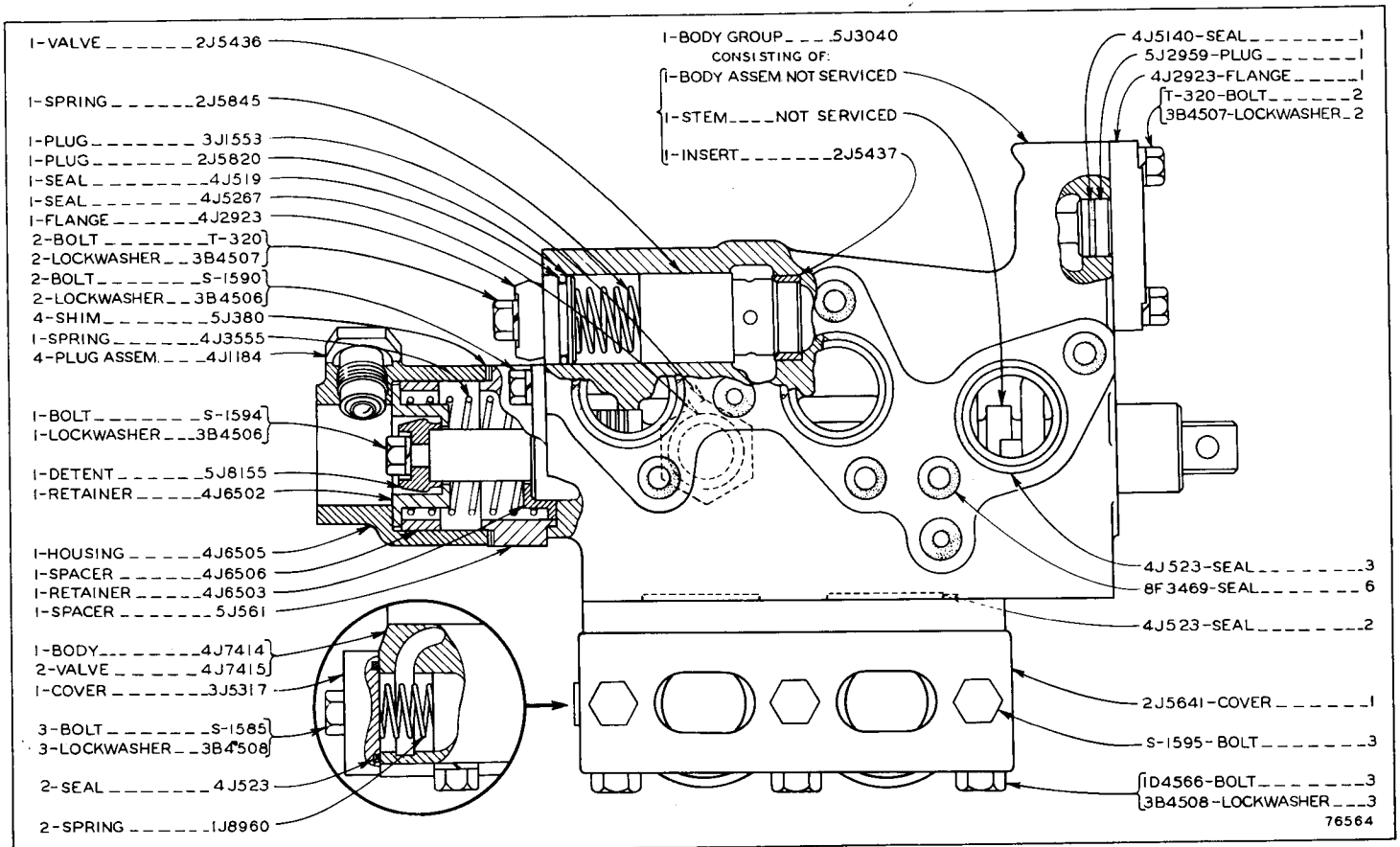

5J3039 CONTROL VALVE GROUP—One Valve
183 & 193 Hydraulic Controls Serial No. 27H1 to 27H4005 inclusive and 28H1 to 28H5509 inclusive
Part of 5J3693 & 5J3691 Tank and Valve Groups shown on Pages 10A, 10D, 10G, 10K, 11, 14, 14C, 14F, 14J and 14M

5J3039 CONTROL VALVE GROUP—One Valve

Effective with 183 & 193 Hydraulic Controls Serial No. 27H4006—Up & 28H5510—Up

Part of 5J3693 & 5J3691 Tank & Valve Groups shown on Pages 10N, 10R, 10U, 10X, 11, 14M, 14Q, 14T, 14W & 14Z

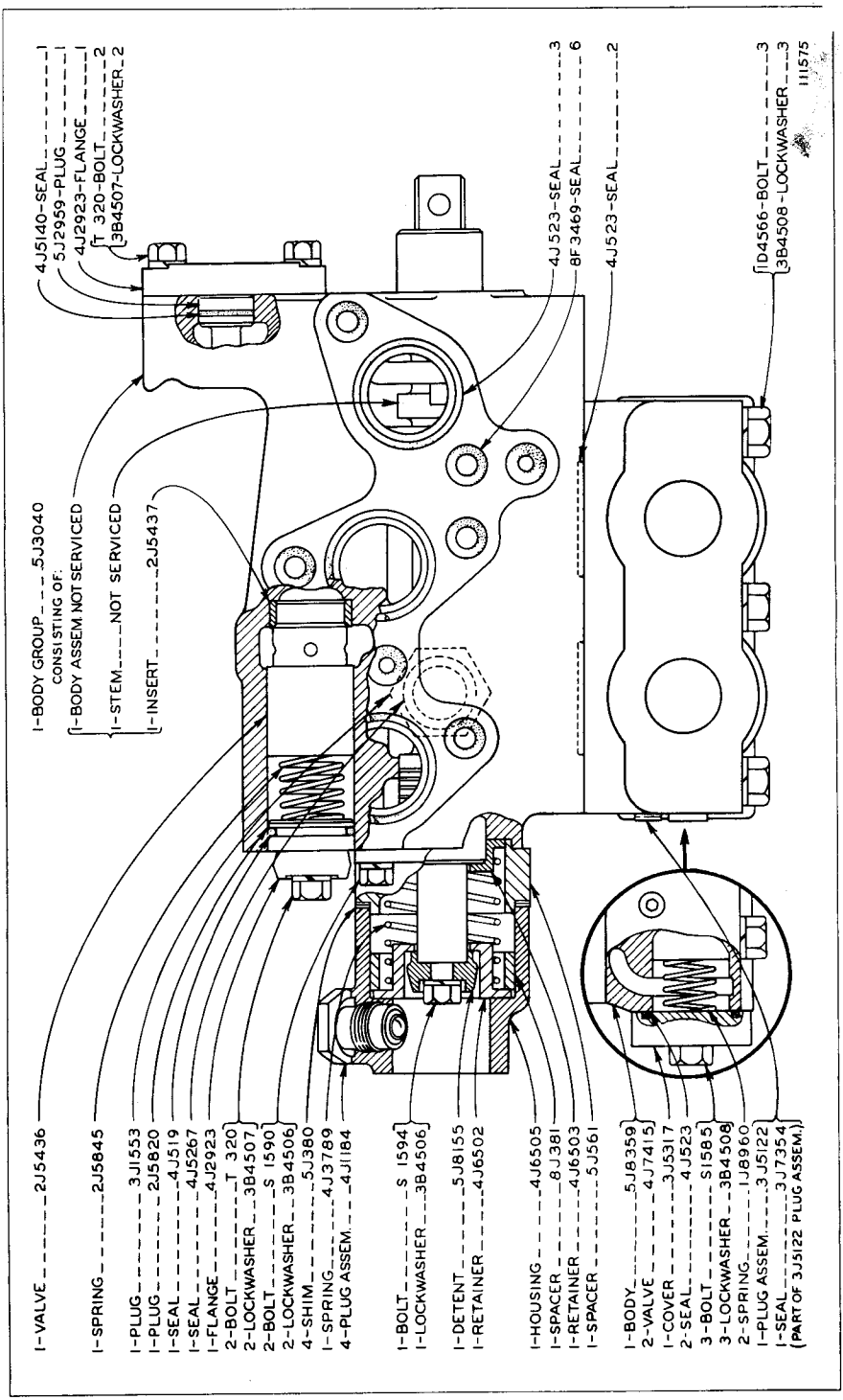

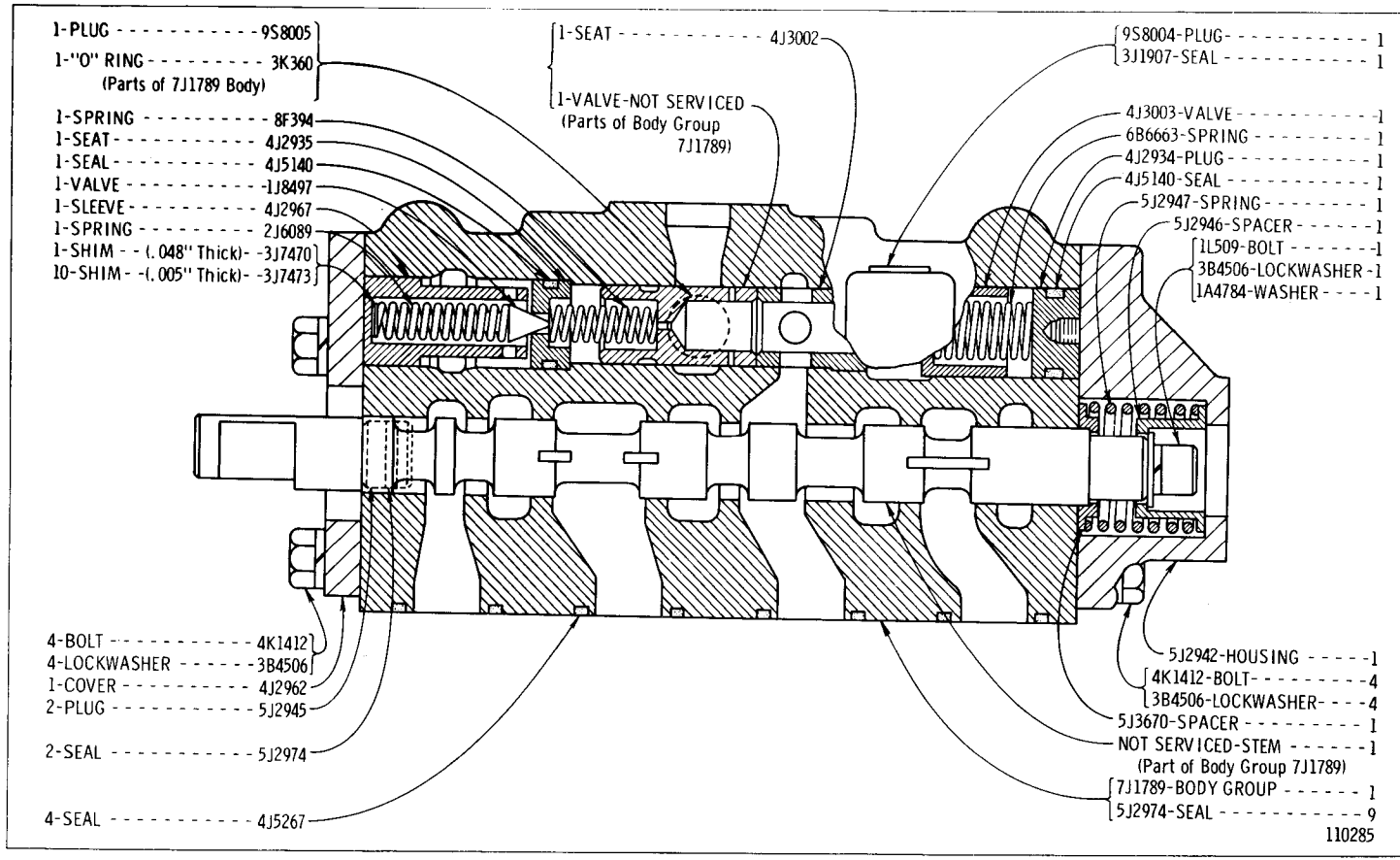

5J3067 CONTROL VALVE GROUP

183 & 193 Hydraulic Controls Serial No. 27H1 to 27H4375 inclusive & 28H1 to 28H6119 inclusive

Part of 5J3693 & 5J3691 Tank & Valve Groups shown on Pages 10A, 10D, 10G, 10K, 10N, 13, 14B, 14E, 14H & 14L

5J3067 CONTROL VALVE GROUP

Serial No. 27H4376-Up and 28H6120-Up

Part of 5J3693 & 5J3691 Tank & Valve Groups shown on Pages 10A, 10D, 10G, 10K, 10N, 13, 14B, 14E, 14H & 14L

Provides Field Replacement for 7J2026 Control Valve Group

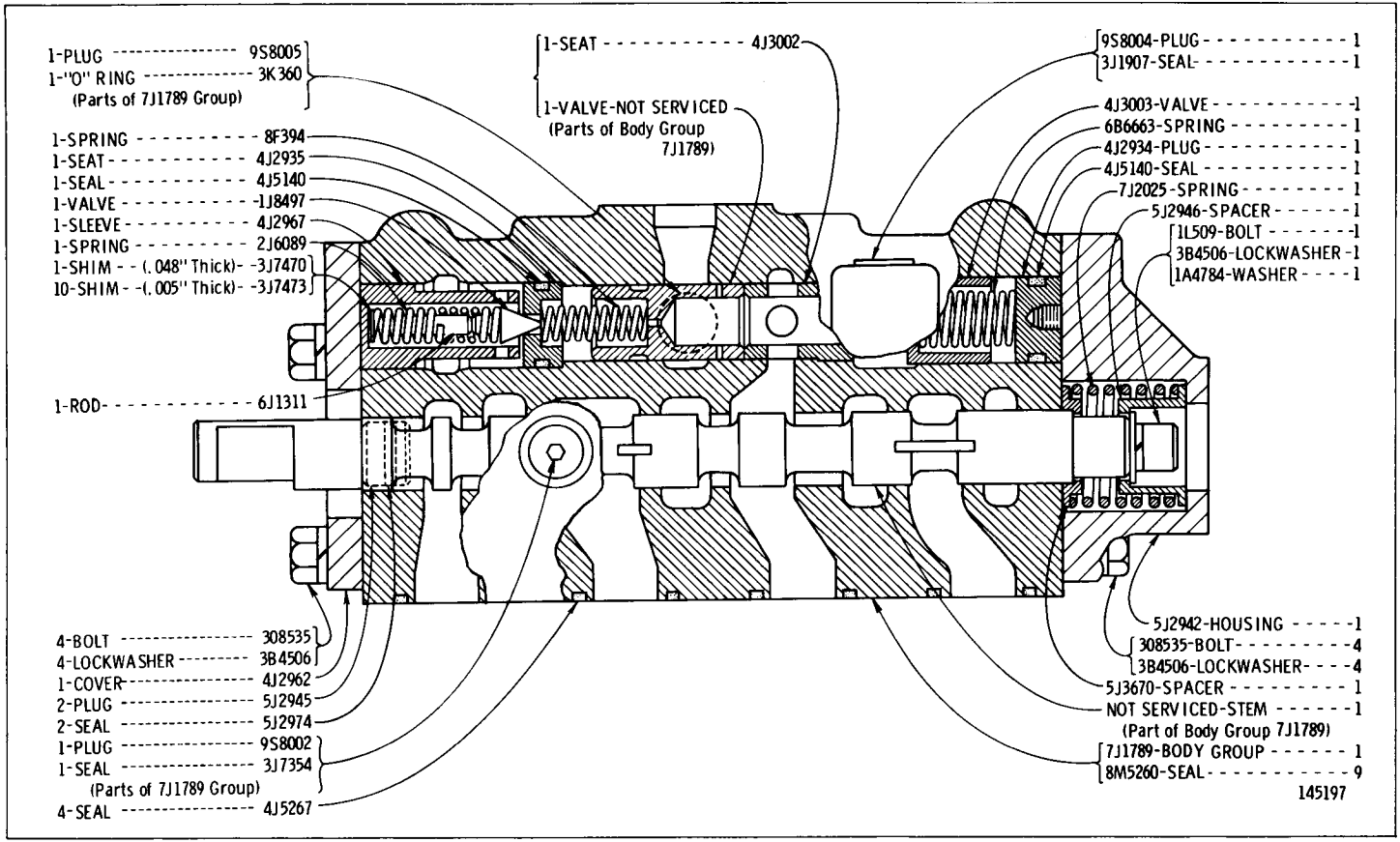

ONLY "CATERPILLAR" PARTS GIVE "CATERPILLAR" PERFORMANCE

7J2026 CONTROL VALVE GROUP

183 & 193 Hydraulic Controls Serial No. 27H4376 to 27H6323 inclusive & 28H6120 to 28H10007 inclusive

Part of 5J3693 & 5J3691 Tank & Valve Groups shown on Pages 10N, 10R, 10U, 10X, 14P, 14S & 14V

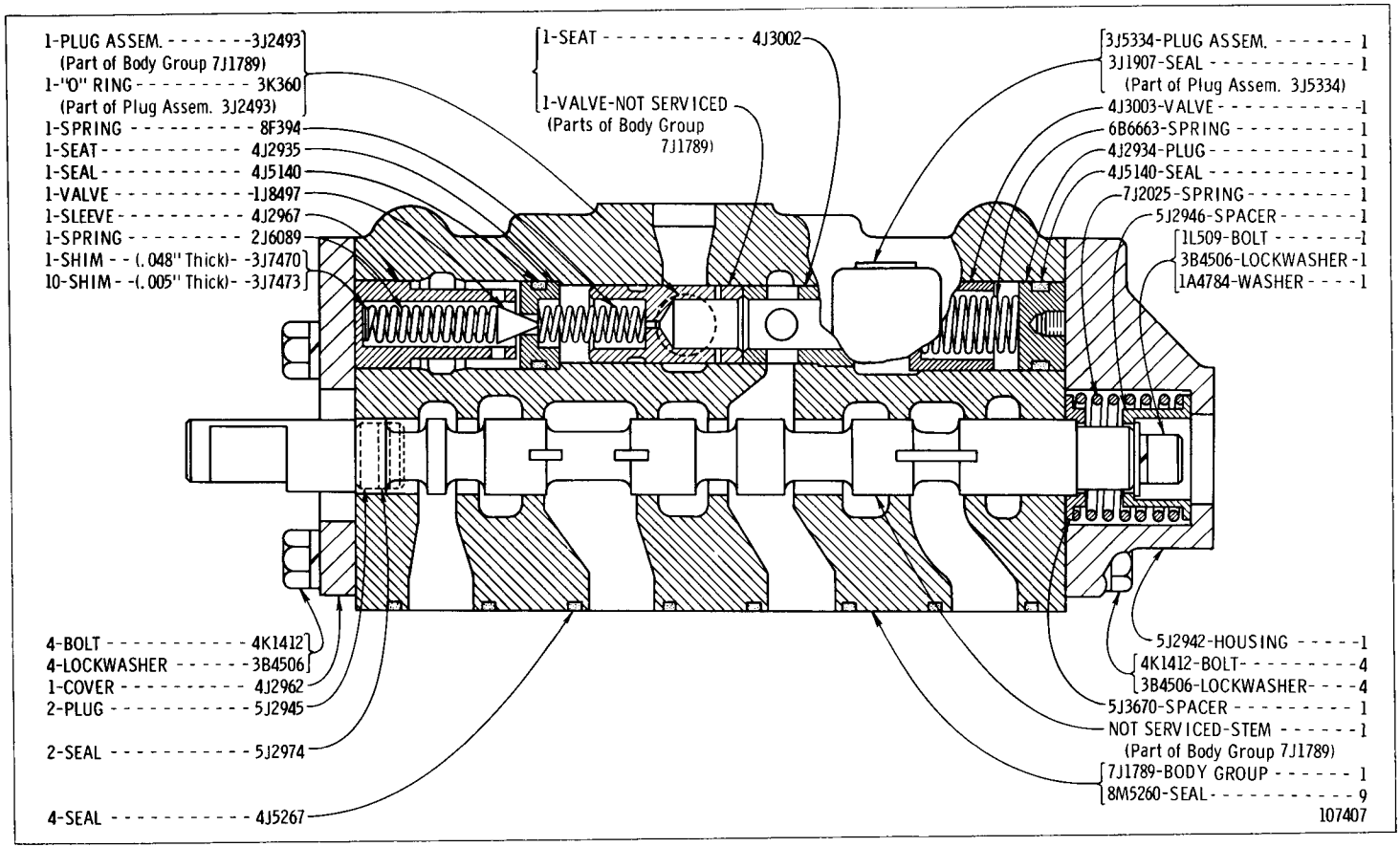

ONLY "CATERPILLAR" PARTS GIVE "CATERPILLAR" PERFORMANCE

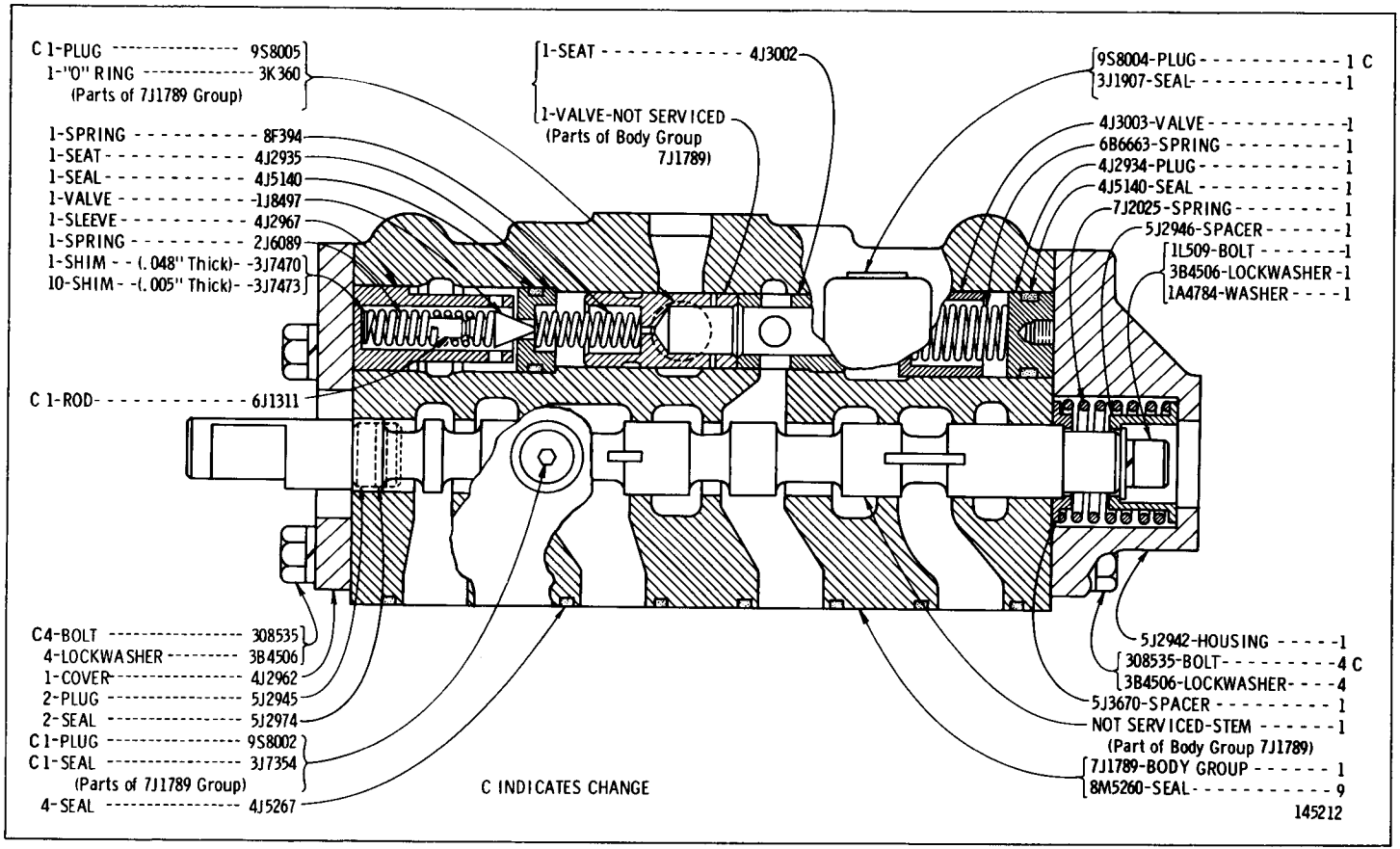

7J2026 CONTROL VALVE GROUP
183 & 193 Hydraulic Controls Serial No. 27H6324-Up & 28H10008-Up
Part of 5J3693 & 5J3691 Tank & Valve Groups shown on Pages 10Z, 14U and 14Y

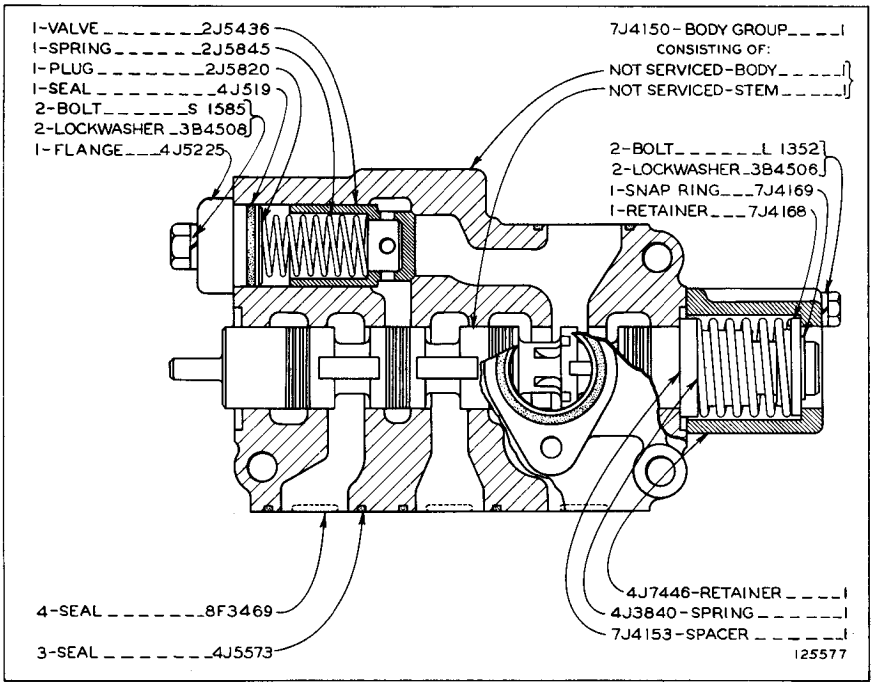

7J4151 CONTROL VALVE GROUP
Effective with Serial No. 28H8557. Part of 6J2247 Conversion Group & 5J3691 Tank & Valve Groups shown on Pages 8C, 14S, 14V & 14Y

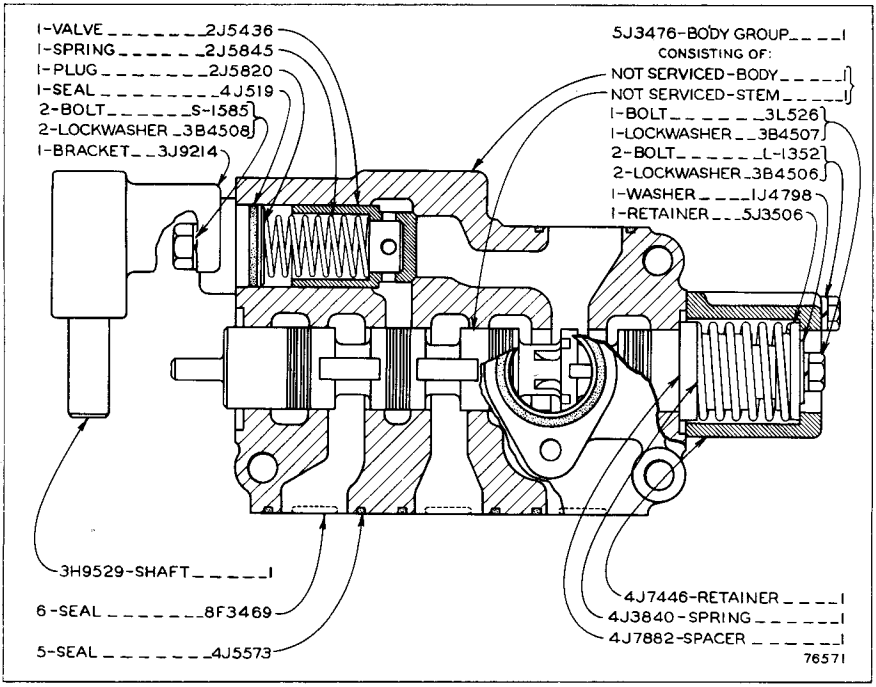

5J2956 CONTROL VALVE GROUP
Part of 6J992 & 6J2247 Field Conversion and 5J3691 Tank and Valve Groups shown on Pages 8A, 8B, 13, 14B, 14E, 14H, 14L and 14P

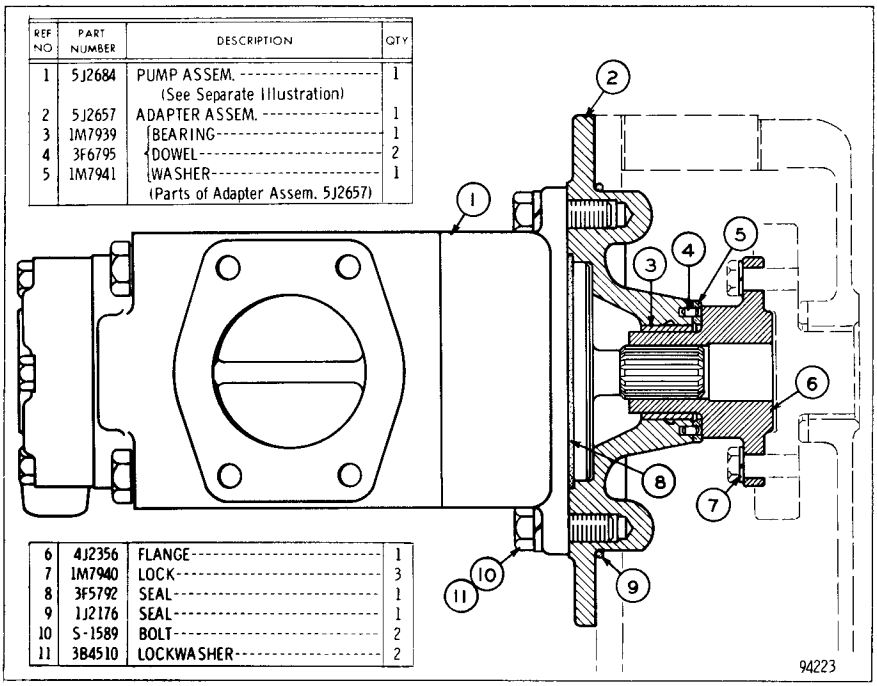

REF NO	PART NUMBER	DESCRIPTION	QTY
1	5J2684	PUMP ASSEM. (See Separate Illustration)	1
2	5J2657	ADAPTER ASSEM.	1
3	1M7939	BEARING	1
4	3F6795	DOWEL	2
5	1M7941	WASHER	1
		(Parts of Adapter Assem. 5J2657)	
6	4J2356	FLANGE	1
7	1M7940	LOCK	3
8	3F5792	SEAL	1
9	1J2176	SEAL	1
10	S-1589	BOLT	2
11	3B4510	LOCKWASHER	2

5J2658 PUMP AND MOUNTING GROUP—Type 1
5J2684 Pump parts are shown on Page 18C

REF NO	PART NUMBER	DESCRIPTION	QTY
1	6J1100	PUMP ASSEM. (See Separate Illustration)	1
2	5J2657	ADAPTER ASSEM.	1
3	1M7939	BEARING	1
4	3F6795	DOWEL	2
5	1M7941	WASHER (Parts of Adapter Assem. 5J2657)	1
6	4J2356	FLANGE	1
7	1M7940	LOCK	3
8	3F5792	SEAL	1
9	1J2176	SEAL	1
10	S-1589	BOLT	2
11	3B4510	LOCKWASHER	2

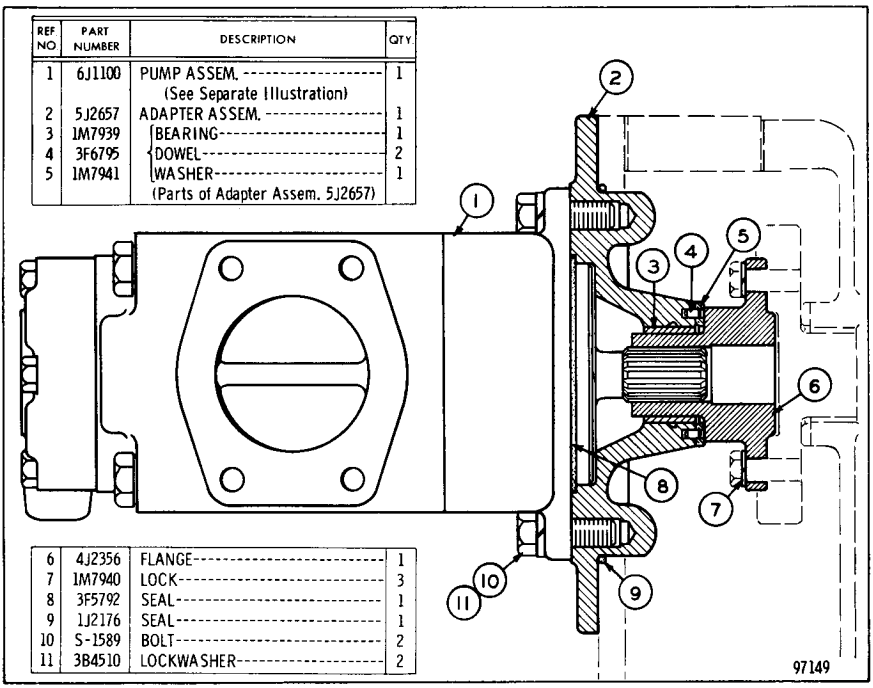

5J2658 PUMP AND MOUNTING GROUP—Type 2
6J1100 Pump parts are shown on Pages 18D & 18E

C INDICATES CHANGE FROM PREVIOUS TYPE

REF NO	PART NUMBER	DESCRIPTION	QTY
C 1	7J590	PUMP ASSEM. (See Separate Illustration)	1
2	5J2657	ADAPTER ASSEM.	1
3	1M7939	BEARING	1
4	3F6795	DOWEL	2
5	1M7941	WASHER (Parts of Adapter Assem. 5J2657)	1
6	4J2356	FLANGE	1
7	1M7940	LOCK	3
8	3F5792	SEAL	1
9	1J2176	SEAL	1
10	S1589	BOLT	2
11	3B4510	LOCKWASHER	2

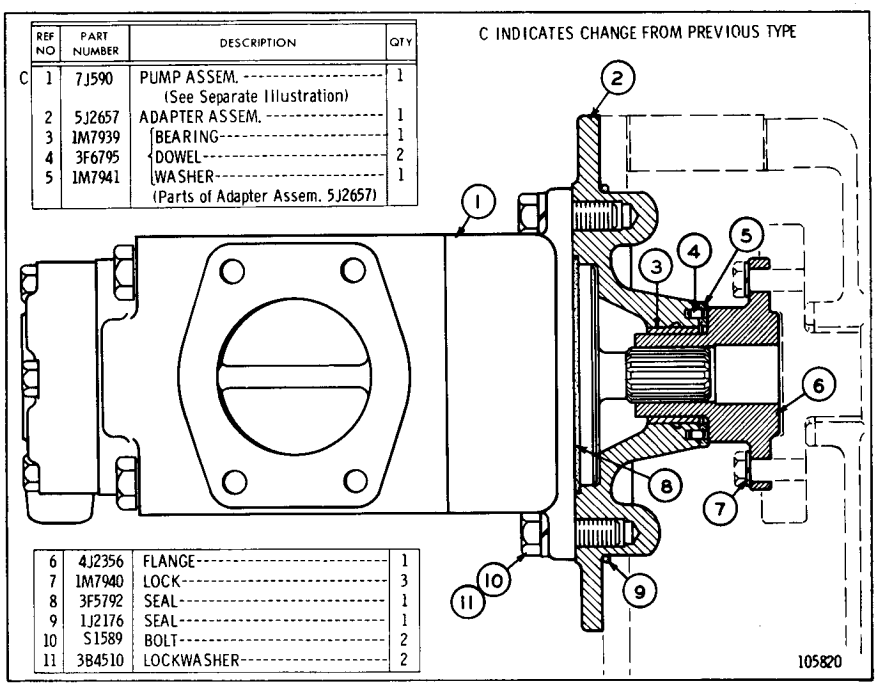

5J2658 PUMP AND MOUNTING GROUP—Type 3
7J590 Pump parts are shown on Page 19

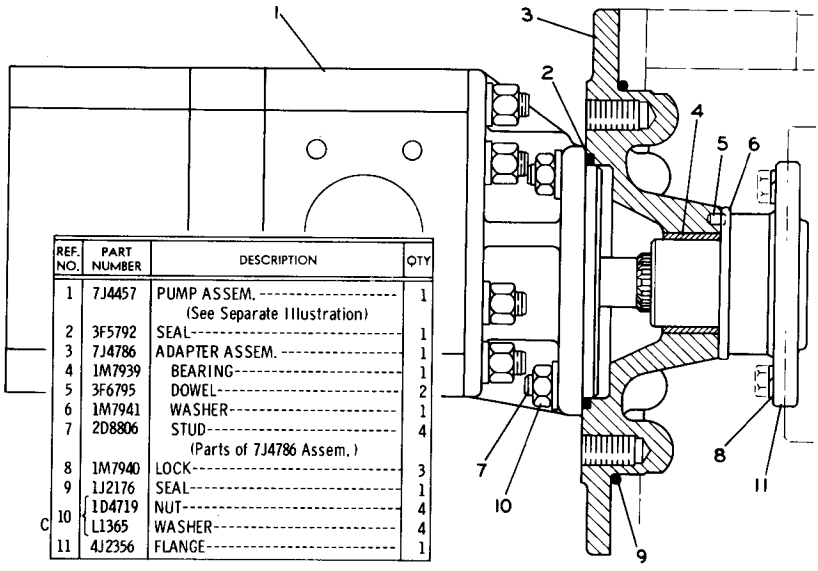

REF. NO.	PART NUMBER	DESCRIPTION	QTY
1	7J4457	PUMP ASSEM. (See Separate Illustration)	1
2	3F5792	SEAL	1
3	7J4786	ADAPTER ASSEM.	1
4	1M7939	BEARING	1
5	3F6795	DOWEL	2
6	1M7941	WASHER	1
7	2D8806	STUD (Parts of 7J4786 Assem.)	4
8	1M7940	LOCK	3
9	1J2176	SEAL	1
C 10	1D4719	NUT	4
	L1365	WASHER	4
11	4J2356	FLANGE	1

C INDICATES CHANGE 203849

7J4459 PUMP AND MOUNTING GROUP—Type 1

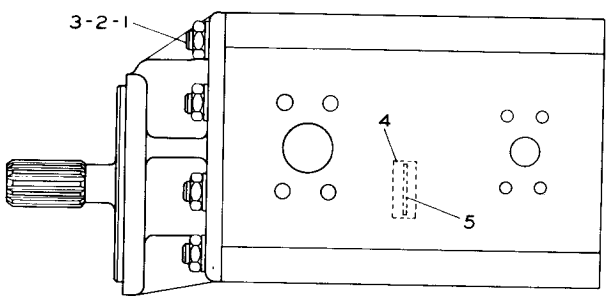

REF. NO.	PART NUMBER	DESCRIPTION	QTY
1	7J4625	STUD	8
2	8H5724	NUT	8
3	6J2391	WASHER	8
4	7J4772	COUPLING	1
5	7J4771	RING	1

	THE FOLLOWING REPAIR KITS ARE AVAILABLE:		
C	8J9239	KIT-----(Seal)----- (Includes Retainers & Seals)	1
C	8J3637	KIT-----(Front Gear Pump)-----	1
C	8J3638	KIT-----(Rear Gear Pump)-----	1

C INDICATES CHANGE 118048

7J4457 HYDRAULIC GEAR PUMP ASSEMBLY
Part of 2P9676 Hydraulic Control Arrangement and 7J4459 Pump Mounting Group shown on Pages 8-8 and 18B

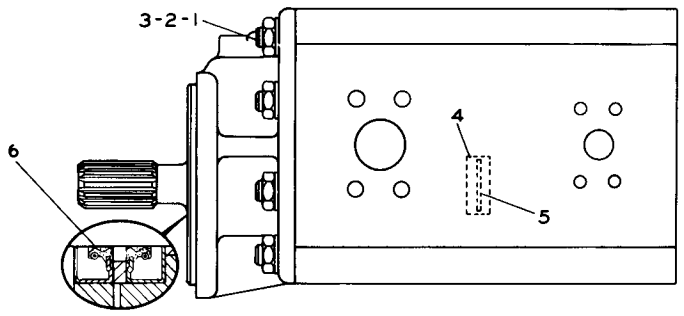

REF. NO.	PART NUMBER	DESCRIPTION	QTY
1	7J4625	STUD	8
2	8H5724	NUT	8
3	6J2391	WASHER	8
4	7J4772	COUPLING	1
5	7J4771	RING	1
6	9J5654	SEAL	2

		THE FOLLOWING REPAIR KITS ARE	
	8J9239	KIT--------(seal)---------- (Includes Retainers & Seals)	1
	8J9424	KIT-----(front gear pump)--------	1
	8J3638	KIT-----(rear gear pump)---------	1

204842

8J5409 GEAR PUMP GROUP

Also part of 7J4459. 3G856 Flange Assembly consisting of a permanent mold casting that has been peened within the D-ring groove for additional fatigue strength, is available

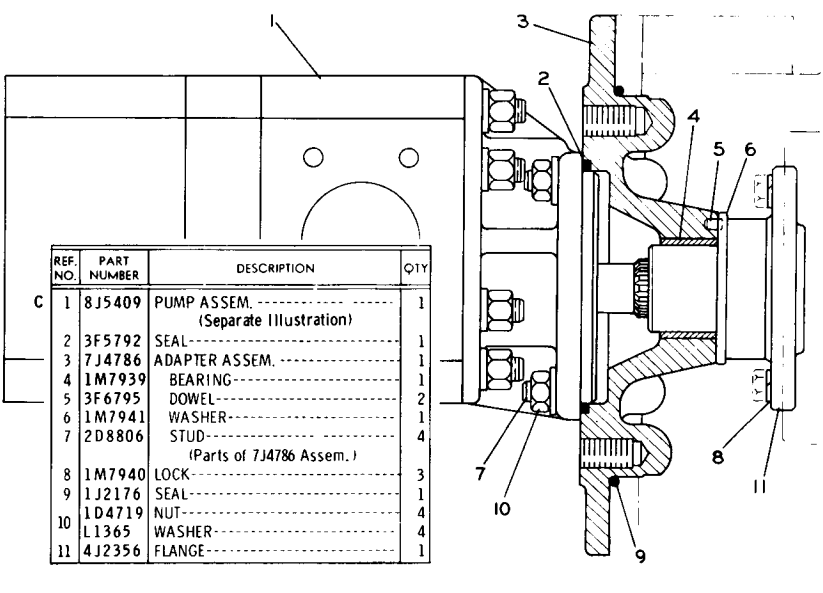

	REF. NO.	PART NUMBER	DESCRIPTION	QTY
C	1	8J5409	PUMP ASSEM. (Separate Illustration)	1
	2	3F5792	SEAL	1
	3	7J4786	ADAPTER ASSEM.	1
	4	1M7939	BEARING	1
	5	3F6795	DOWEL	2
	6	1M7941	WASHER	1
	7	2D8806	STUD (Parts of 7J4786 Assem.)	4
	8	1M7940	LOCK	3
	9	1J2176	SEAL	1
	10	1D4719	NUT	4
		L1365	WASHER	4
	11	4J2356	FLANGE	1

C INDICATES CHANGE

153816

7J4459 PUMP AND MOUNTING GROUP—Type 2

8J5409 Pump parts are shown on Page 18B-1

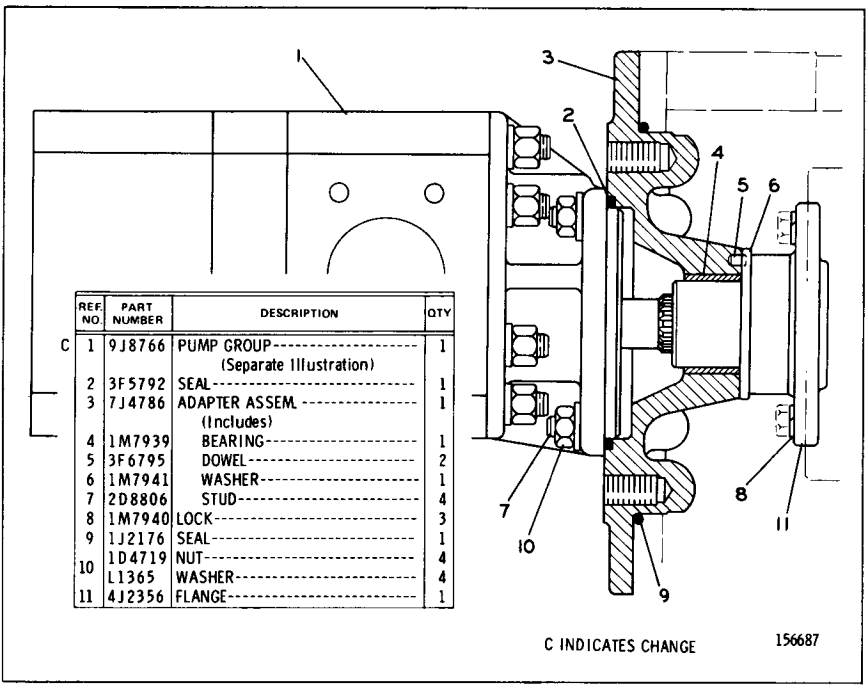

	REF. NO.	PART NUMBER	DESCRIPTION	QTY
C	1	9J8766	PUMP GROUP (Separate Illustration)	1
	2	3F5792	SEAL	1
	3	7J4786	ADAPTER ASSEM. (Includes)	1
	4	1M7939	BEARING	1
	5	3F6795	DOWEL	2
	6	1M7941	WASHER	1
	7	2D8806	STUD	4
	8	1M7940	LOCK	3
	9	1J2176	SEAL	1
	10	1D4719	NUT	4
		L1365	WASHER	4
	11	4J2356	FLANGE	1

C INDICATES CHANGE 156687

7J4459 PUMP AND MOUNTING GROUP—Type 3

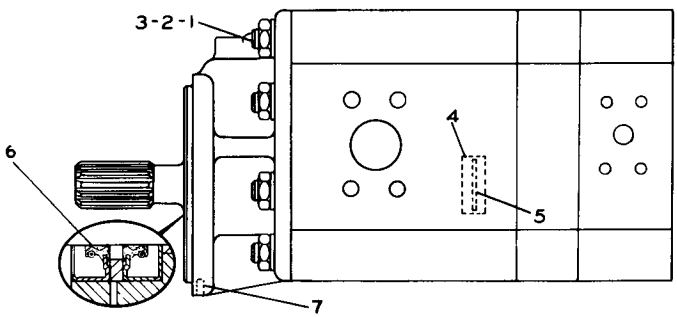

REF. NO.	PART NUMBER	DESCRIPTION	QTY
1	5P5069	STUD	8
2	8H5724	NUT	8
3	6J2391	WASHER	8
4	7J4772	COUPLING	1
5	7J4771	RING	1
6	9J5654	SEAL	2

7	9J9841	PLUG	1
		THE FOLLOWING REPAIR KITS ARE AVAILABLE:	
	8J9239	KIT---(seal)---(Includes Retainers & Seals)	1
	9J9289	KIT---(front gear pump)	1
	8J3638	KIT---(rear gear pump)	1

156679

9J8766 GEAR PUMP GROUP
Also part of 7J4459 Pump and Mounting Group

9J5050 HYDRAULIC PUMP GROUP—Field Installation
Part of 5J2854 Pump and Mounting Group shown on Page 18B-4

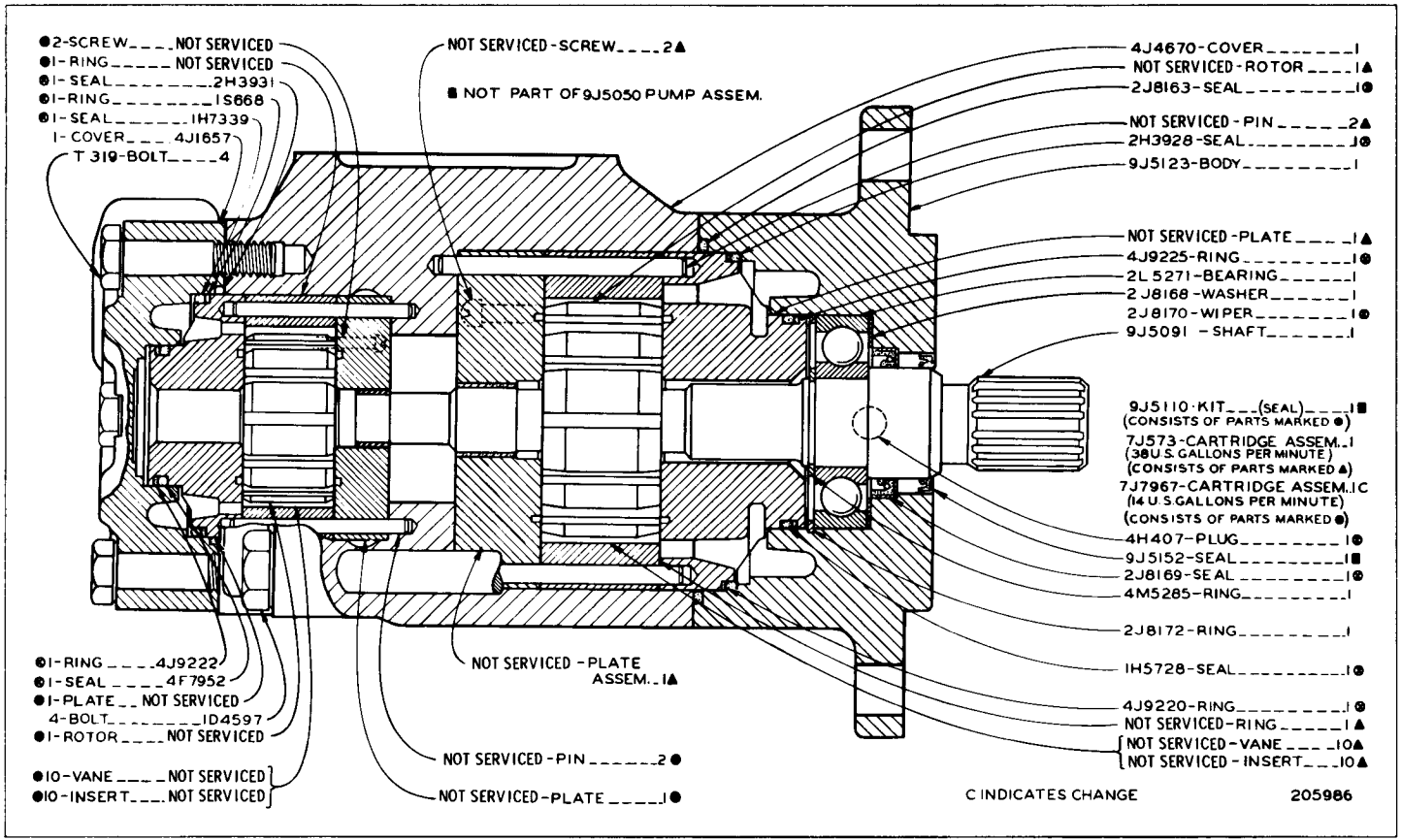

9J5050 HYDRAULIC PUMP GROUP—Field Installation—Type 2
Part of 5J2854 Pump and Mounting Group shown on Page 18B-4
3G1270 and 3G2721 Cartridge parts are shown on Page 19B-2

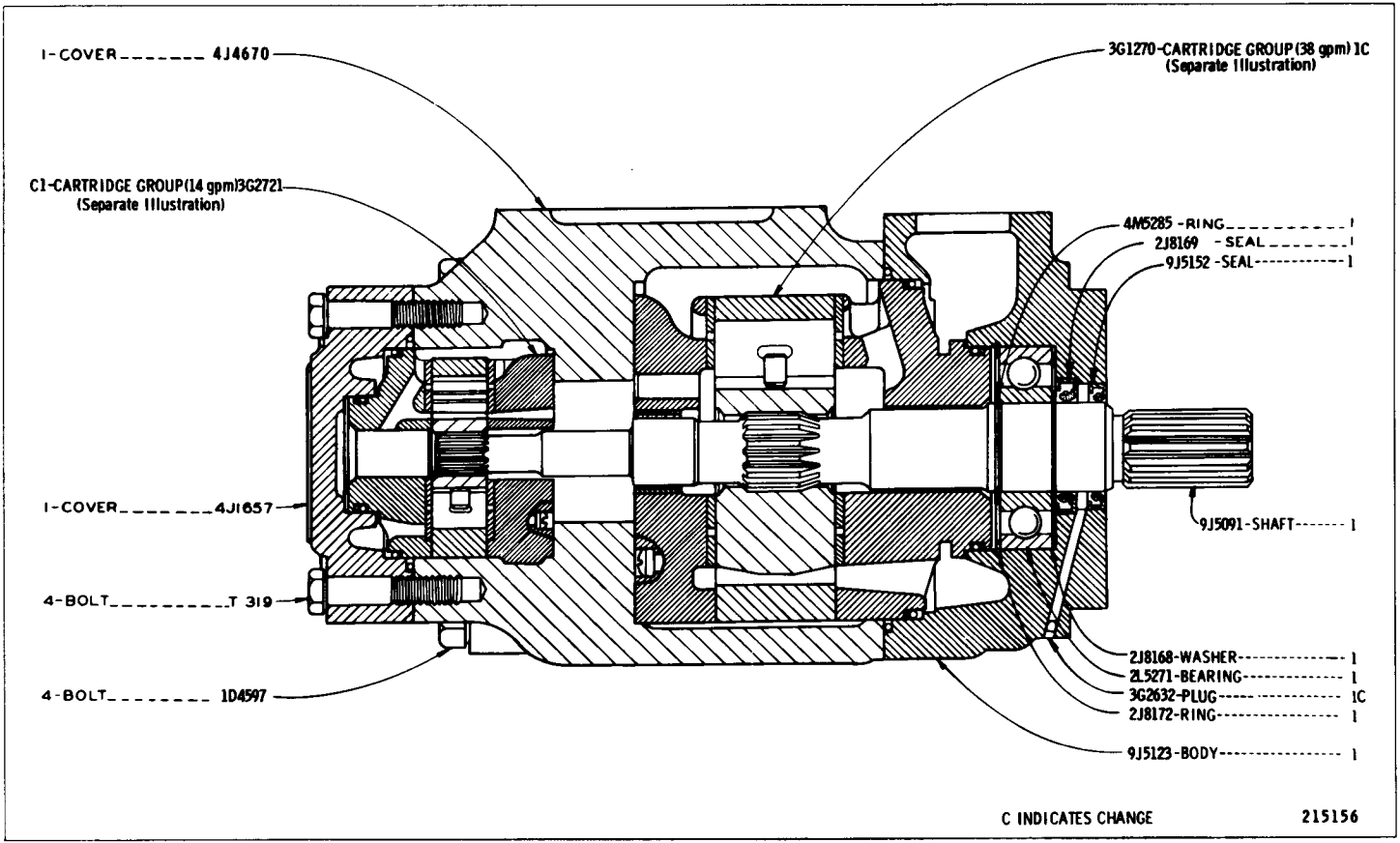

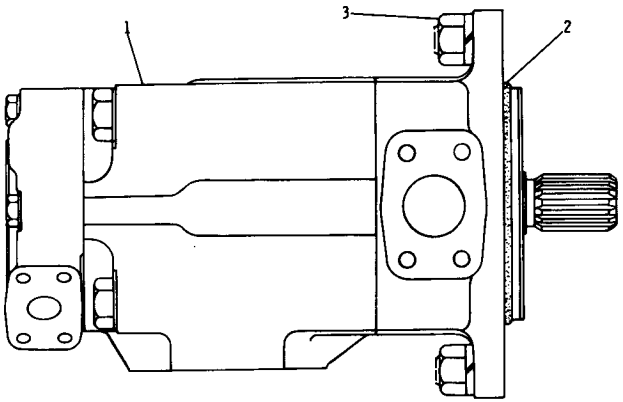

	REF. NO.	PART NUMBER	DESCRIPTION	QTY
C	1	9J5050	PUMP GROUP---------- (Separate Illustration)	1
	2	5F3106	SEAL----------	1
	3	1B4206	NUT----------	2
		3B4510	LOCKWASHER----------	2

C INDICATES CHANGE

157754

5J2854 PUMP AND MOUNTING GROUP—Field Installation
9J5050 Hydraulic Pump parts are shown on Page 18B-3

5J2684 HYDRAULIC PUMP ASSEMBLY

Part of 5J2658 Pump and Mounting Group shown on Page 18

REF NO	PART NUMBER	DESCRIPTION	QTY
1	4K415	COVER	1
2	2B947	BOLT	4
3	▲ 2H4145	SEAL	1
4	▲ 1S669	RING	1
5	▲ 2H3934	SEAL	1
6	⊕ 4J7477	RING	1
7	● 4J7476	ROTOR	1

REF NO	PART NUMBER	DESCRIPTION	QTY
8	⊕ 4K407	PIN	2
9	⊕ 4K405	SCREW	2
10	● 4J1393	PIN	2
11	● 4J1394	SCREW	2
12	● 4J7475	ROTOR	1
13	● 4J5129	RING	1
14	▲ 2H3935	SEAL	1

REF NO	PART NUMBER	DESCRIPTION	QTY
15	▲ 5F3106	SEAL	1
16	▲ 6H3977	SEAL	1
17	3L1425	BEARING	1
18	2J7763	WASHER	1
19	▲ 2J7764	SEAL	1
20	▲ 2J7759	WIPER	1
21	5J1219	SHAFT	1
22	2J7760	BODY	1
23	1J6474	RING	1
24	3J7719	RING	1
25	▲ 1S668	RING	1
26	● 3J4999	PLATE	1
27	▲ 4J9221	RING	1
28	● 4J1397	VANE KIT (Consists of 10 Vanes & 10 Inserts)	1
29	4J3429	COVER	1
30	● 3J5000	PLATE ASSEM.	1
31	3J986	BEARING (Part of Plate Assem. 3J5000)	1
32	⊕ 4J3382	PLATE	1

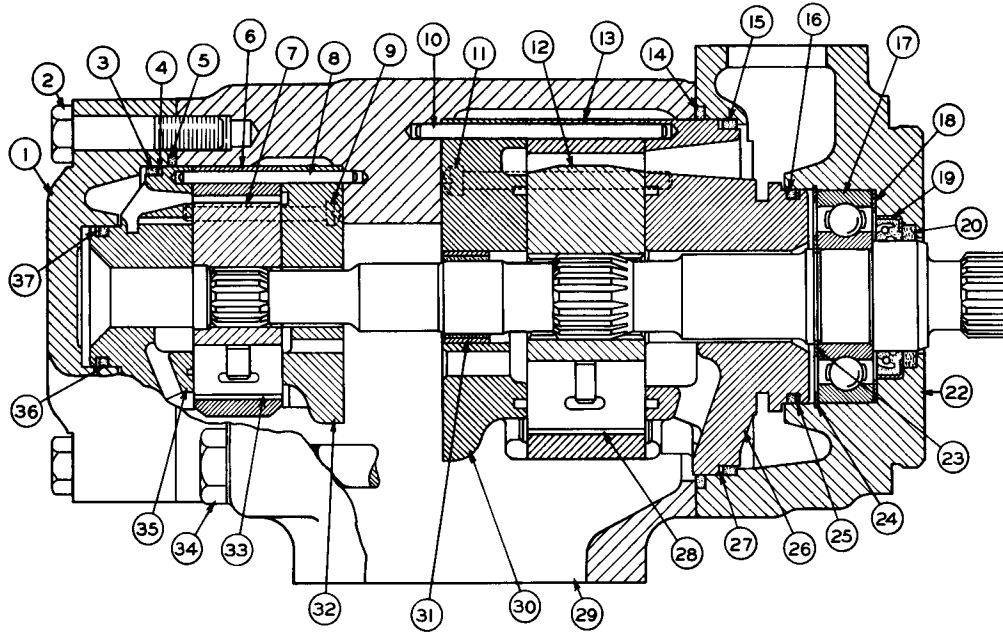

33	⊕ 4J982	VANE KIT (Consists of 10 Vanes & 10 Inserts)	1
34	4J3427	BOLT	4
35	⊕ 4J976	PLATE	1
36	▲ 1H9696	SEAL	1
37	▲ 1S670	RING	1
	4J9278	SEAL KIT (Consists of Parts Marked ▲)	1
	6J1101	CARTRIDGE KIT (Consists of Parts Marked ●) (50 U. S. Gallons Per Minute)	1
	5J5070	CARTRIDGE KIT (Consists of Parts Marked ⊕) (17 U. S. Gallons Per Minute)	1

96456

ONLY "CATERPILLAR" PARTS GIVE "CATERPILLAR" PERFORMANCE

REF NO	PART NUMBER	DESCRIPTION	QTY
1	4K415	COVER	1
2	2B947	BOLT	4
3	▲ 2H4145	SEAL	1
4	▲ 1S669	RING	1
5	▲ 2H3934	SEAL	1
6	⊛ 4J7477	RING	1
7	⊛ 4J7476	ROTOR	1

REF NO	PART NUMBER	DESCRIPTION	QTY
8	⊛ 4K407	PIN	2
9	⊛ 4K405	SCREW	2
10	● 4J1393	PIN	2
11	● 4J1394	SCREW	2
12	● 5J5928	ROTOR	1
13	● 5J5926	RING	1
14	▲ 2H3935	SEAL	1

REF NO	PART NUMBER	DESCRIPTION	QTY
15	▲ 5F3106	SEAL	1
16	▲ 6H3977	SEAL	1
17	3L1425	BEARING	1
18	2J7763	WASHER	1
19	▲ 2J7764	SEAL	1
20	▲ 2J7759	WIPER	1
21	5J1219	SHAFT	1
22	2J7760	BODY	1
23	1J6474	RING	1
24	3J7719	RING	1
25	▲ 1S668	RING	1
26	● 5J5923	PLATE	1
27	▲ 4J9221	RING	1
28	● 4J1397	VANE KIT (Consists of 10 Vanes & 10 Inserts)	1
29	4J3429	COVER	1
30	● 5J5927	PLATE ASSEM.	1
31	3J986	BEARING (Part of Plate Assem. 5J5927)	1
32	⊛ 4J3382	PLATE	1

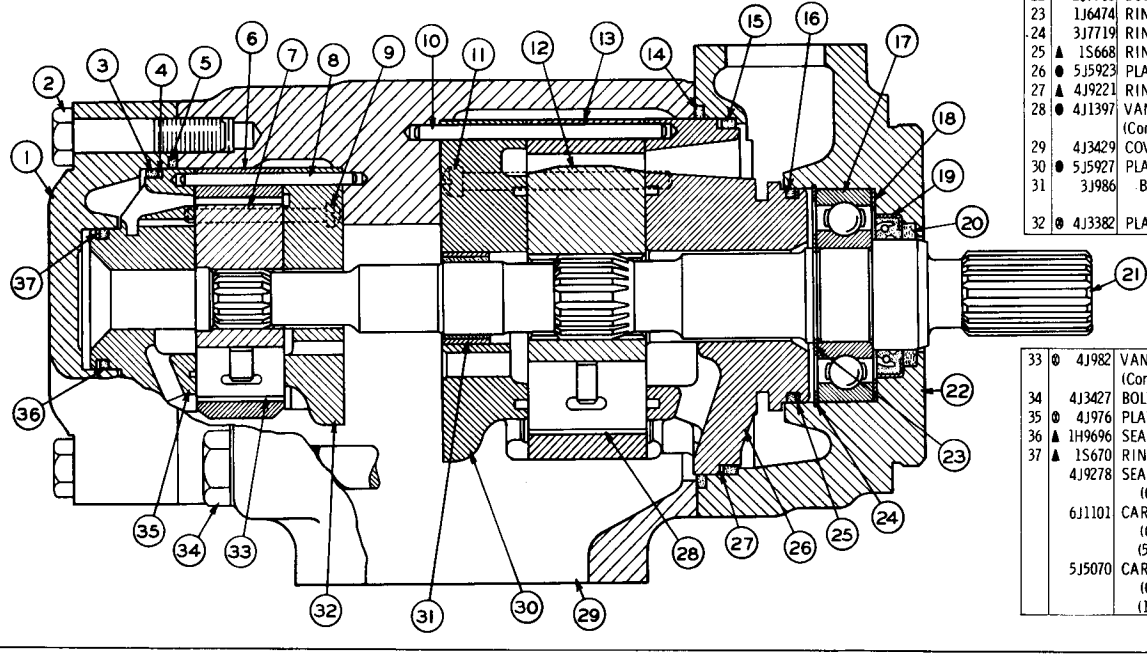

REF NO	PART NUMBER	DESCRIPTION	QTY
33	⊛ 4J982	VANE KIT (Consists of 10 Vanes & 10 Inserts)	1
34	4J3427	BOLT	4
35	⊛ 4J976	PLATE	1
36	▲ 1H9696	SEAL	1
37	▲ 1S670	RING	1
	4J9278	SEAL KIT (Consists of Parts Marked ▲)	1
	6J1101	CARTRIDGE KIT (Consists of Parts Marked ●) (50 U. S. Gallons Per Minute)	1
	5J5070	CARTRIDGE KIT (Consists of Parts Marked ●) (17 U. S. Gallons Per Minute)	1

97150

6J1100 HYDRAULIC PUMP ASSEMBLY

Part of 5J2658 Pump and Mounting Group shown on Page 18A

6J1100 HYDRAULIC PUMP ASSEMBLY—Type 2

Part of 5J2658 Pump & Mounting Group shown on Page 18A

Only separate parts serviced. When complete Assembly is required order 7J590 shown on Page 19

REF NO	PART NUMBER	DESCRIPTION	QTY
1	4K415	COVER	1
2	2B947	BOLT	4
3	▲ 2H4145	SEAL	1
4	▲ 1S669	RING	1
5	▲ 2H3934	SEAL	1
6	● 4J7477	RING	1
7	● 4J7476	ROTOR	1

REF NO	PART NUMBER	DESCRIPTION	QTY
8	◍ 4K407	PIN	2
9	◍ 4K405	SCREW	2
10	● 4J1393	PIN	2
11	● 4J1394	SCREW	2
12	● 5J5928	ROTOR	1
13	● 5J5926	RING	1
14	▲ 2H3935	SEAL	1

REF NO	PART NUMBER	DESCRIPTION	QTY
15	▲ 5F3106	SEAL	1
16	▲ 6H3977	SEAL	1
17	3L1425	BEARING	1
18	2J7763	WASHER	1
19	▲ 2J7764	SEAL	1
20	▲ 2J7759	WIPER	1
21	5J1219	SHAFT	1
22	2J7760	BODY	1
23	1J6474	RING	1
24	3J7719	RING	1
25	▲ 1S668	RING	1
26	● 6K9074	PLATE	1
27	▲ 4J9221	RING	1
28	● 4J1397	VANE KIT (Consists of 10 Vanes & 10 Inserts)	1
29	4J3429	COVER	1
30	●6J9073	PLATE ASSEM.	1
31	Not Serv	BEARING (Part of 6J9073 Assem.)	1
32	●6J9075	PLATE	1

33	◍ 4J982	VANE KIT (Consists of 10 Vanes & 10 Inserts)	1
34	4J3427	BOLT	4
35	◍ 6J8112	PLATE	1
36	▲ 1H9696	SEAL	1
37	▲ 1S670	RING	1
	4J9278	SEAL KIT (Consists of Parts Marked ▲)	1
	6J1101	CARTRIDGE KIT (Consists of Parts Marked ●) (50 U. S. Gallons Per Minute)	1
	5J5070	CARTRIDGE KIT (Consists of Parts Marked ◍) (17 U. S. Gallons Per Minute)	1

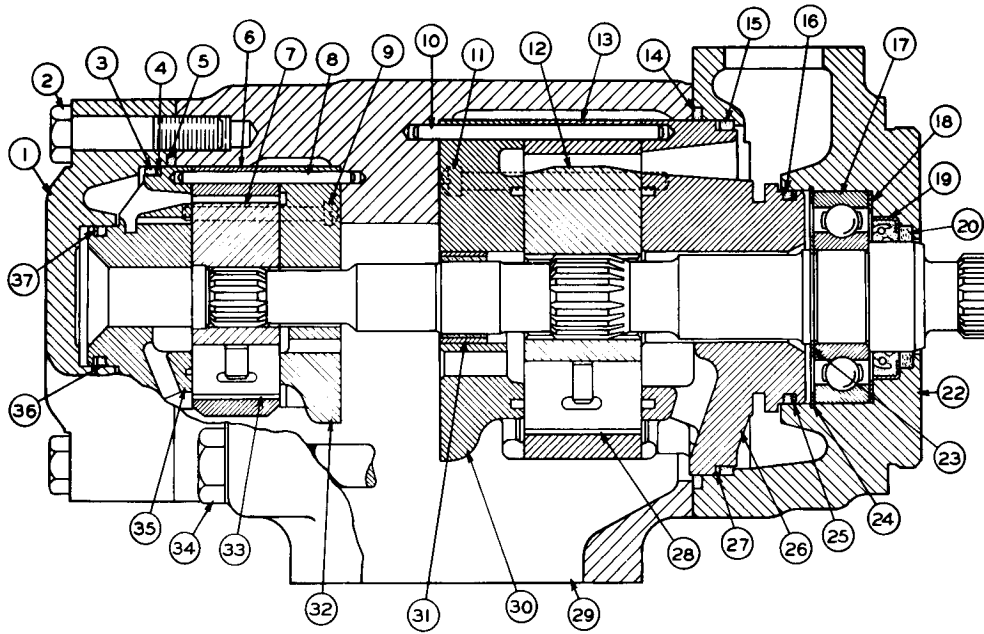

132423

7J590 HYDRAULIC PUMP ASSEMBLY

Part of 5J2658 Pump and Mounting Group shown on Page 18A

REF. NO.	PART NUMBER	DESCRIPTION	QTY
1	4K415	COVER	1
2	2B947	BOLT	4
▲ 3	2H4145	SEAL	1
▲ 4	1S669	RING	1
▲ 5	2H3934	SEAL	1
⊛ 6	Not Serv	RING	1
⊛ 7	Not Serv	ROTOR	1

REF. NO.	PART NUMBER	DESCRIPTION	QTY
⊛ 8	Not Serv	PIN	2
⊛ 9	Not Serv	SCREW	2
● 10	Not Serv	PIN	2
● 11	Not Serv	SCREW	2
● 12	Not Serv	ROTOR	1
● 13	Not Serv	RING	1
▲ 14	2H3935	SEAL	1

REF. NO.	PART NUMBER	DESCRIPTION	QTY
▲ 15	5F3106	SEAL	1
▲ 16	6H3977	SEAL	1
17	3L1425	BEARING	1
18	2J7763	WASHER	1
▲ 19	2J7764	SEAL	1
▲ 20	2J7759	WIPER	1
21	5J1219	SHAFT	1
22	2J7760	BODY	1
23	1J6474	RING	1
24	3J7719	RING	1
▲ 25	1S668	RING	1
● 26	Not Serv	PLATE	1
▲ 27	4J9221	RING	1
● 28	Not Serv	VANE	10
●	Not Serv	INSERT	10
29	4J3429	COVER	1
● 30	Not Serv	PLATE ASSEM.	1
● 31	Not Serv	BEARING	1
⊛ 32	Not Serv	PLATE	1

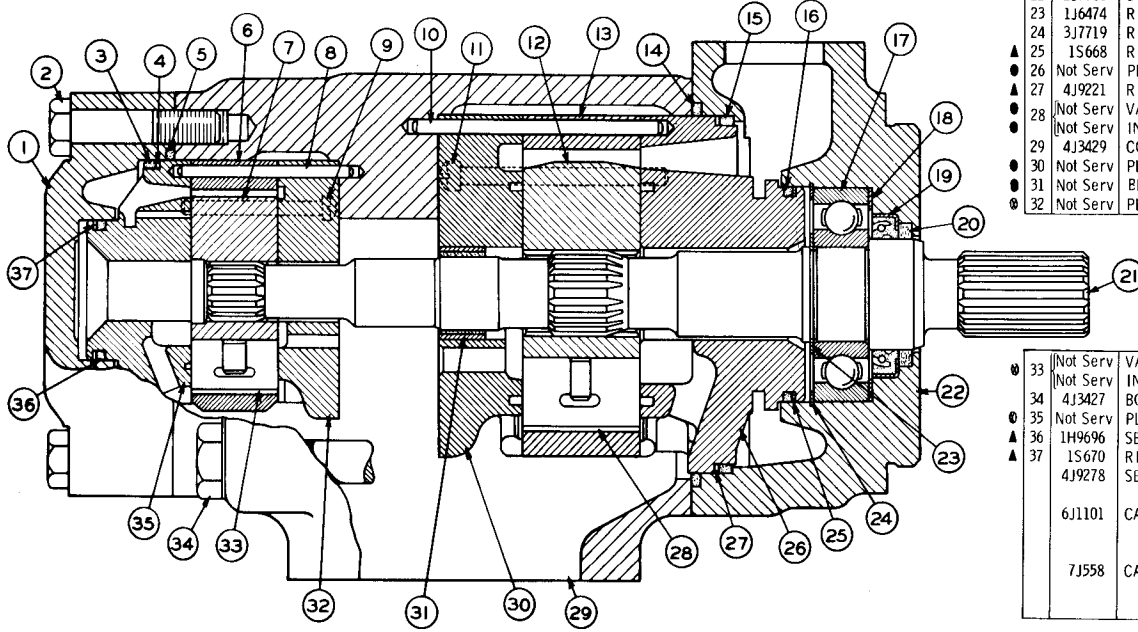

REF. NO.	PART NUMBER	DESCRIPTION	QTY
⊛ 33	Not Serv	VANE	10
	Not Serv	INSERT	10
34	4J3427	BOLT	4
⊛ 35	Not Serv	PLATE	1
▲ 36	1H9696	SEAL	1
▲ 37	1S670	RING	1
	4J9278	SEAL KIT	1
		(Consists of Parts Marked ▲)	
	6J1101	CARTRIDGE ASSEM.	1
		(Consists of Parts Marked ●)	
		(50 U.S. Gallons Per Minute)	
	7J558	CARTRIDGE ASSEM.	1
		(Consists of Parts Marked ⊛)	
		(17 U.S. Gallons Per Minute)	

105821

ONLY "CATERPILLAR" PARTS GIVE "CATERPILLAR" PERFORMANCE

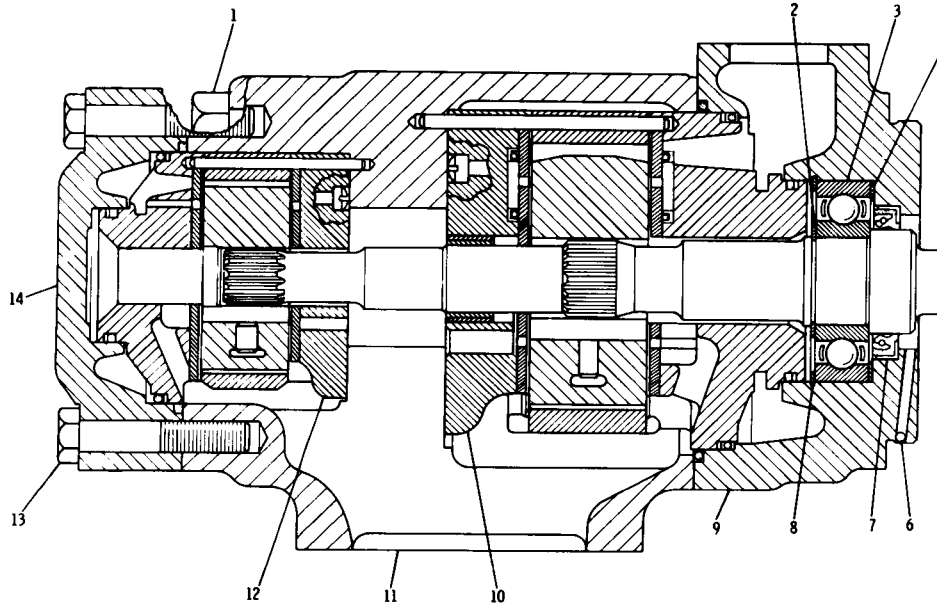

REF. NO.	PART NUMBER	DESCRIPTION	QTY
1	4J3427	BOLT	4
2	1J6474	RING	1
3	3L1425	BEARING	1
4	2J7763	WASHER	1
5	5J1219	SHAFT	1
C 6	3G785	BALL	1
7	2J7764	SEAL	1
8	3J7719	RING	1
C 9	9J5120	BODY	1
C 10	3G2747	CARTRIDGE ASSEM. ----(50 GPM)-- (Separate Illustration)	1
C 11	7J8081	COVER ASSEM. (Includes)	1
	7J8080	DAMPER	4
C 12	3G2804	CARTRIDGE GROUP ----(17 GPM)- (Separate Illustration)	1
13	2B947	BOLT	4
14	4K415	COVER	1

C INDICATES CHANGE

165388

7J590 VANE PUMP GROUP—Type 2
Part of 5J2658 Pump and Mounting Group shown on Page 18A

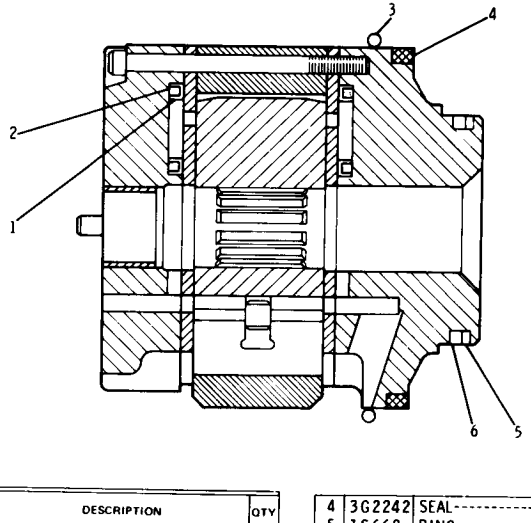

REF. NO.	PART NUMBER	DESCRIPTION	QTY
1	3G2241	RETAINER	4
2	3G2240	SEAL	4
3	2H3935	SEAL	1
4	3G2242	SEAL	1
5	1S668	RING	1
6	6H3977	SEAL	1

165288

3G2747 CARTRIDGE GROUP—50 GPM
Part of 7J590 Vane Pump Group

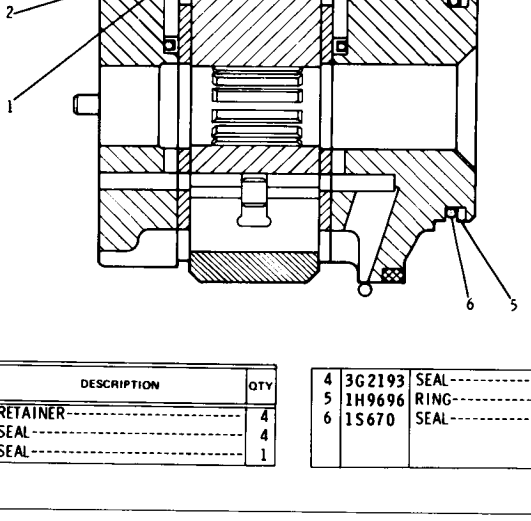

REF. NO.	PART NUMBER	DESCRIPTION	QTY
1	3G2192	RETAINER	4
2	3G2191	SEAL	4
3	2H3934	SEAL	1
4	3G2193	SEAL	1
5	1H9696	RING	1
6	1S670	SEAL	1

163419

3G2804 CARTRIDGE GROUP—17 GPM
Part of 7J590 Vane Pump Group

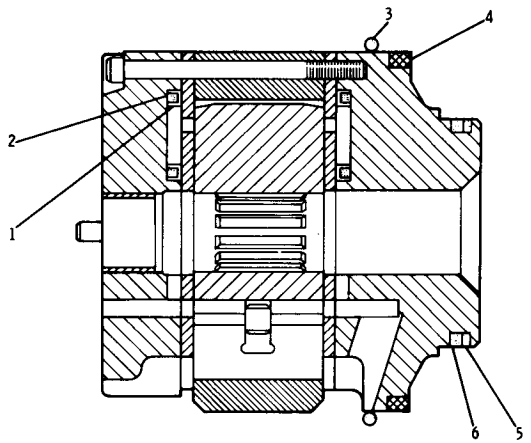

REF. NO.	PART NUMBER	DESCRIPTION	QTY
1	3G1264	RETAINER	4
2	3G1265	SEAL	4
3	2J8163	SEAL	1
4	3G1820	SEAL	1
5	4J9225	RING	1
6	1H5728	SEAL	1

162653

3G1270 CARTRIDGE GROUP
Part of 9J5050 Hydraulic Pump Group shown on Page 18B-3b

REF. NO.	PART NUMBER	DESCRIPTION	QTY
1	3G2714	RETAINER (seal)	4
2	3G2715	SEAL	4
3	2H3931	SEAL	1
4	3G2716	RING	1
5	4J9222	RING	1
6	4F7952	SEAL	1

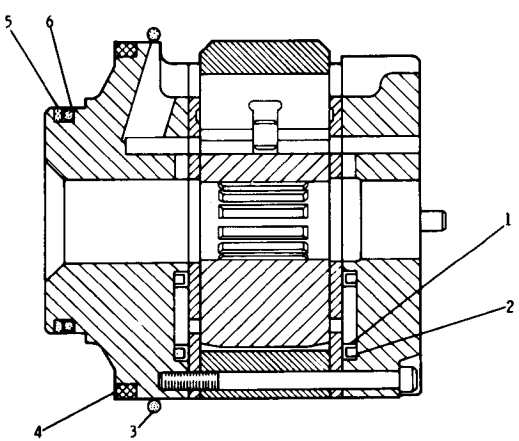

212614

3G2721 CARTRIDGE GROUP
Part of 9J5050 Hydraulic Pump Group shown on Page 18B-3b

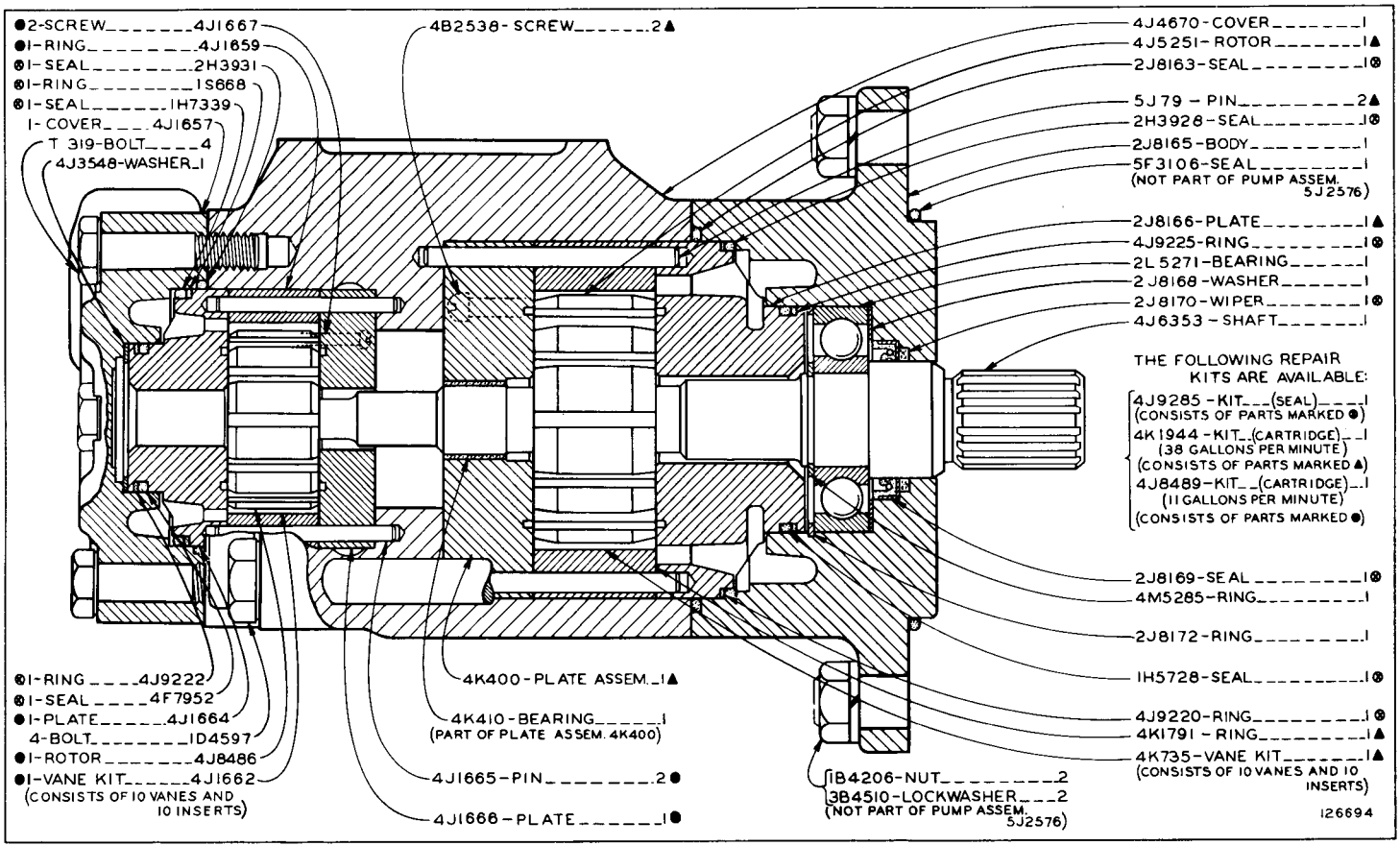

5J2576 HYDRAULIC PUMP ASSEMBLY

5J2576 HYDRAULIC PUMP ASSEMBLY—Type 2

Only separate parts serviced. When complete Assembly is required order 7J612 shown on Page 20-2

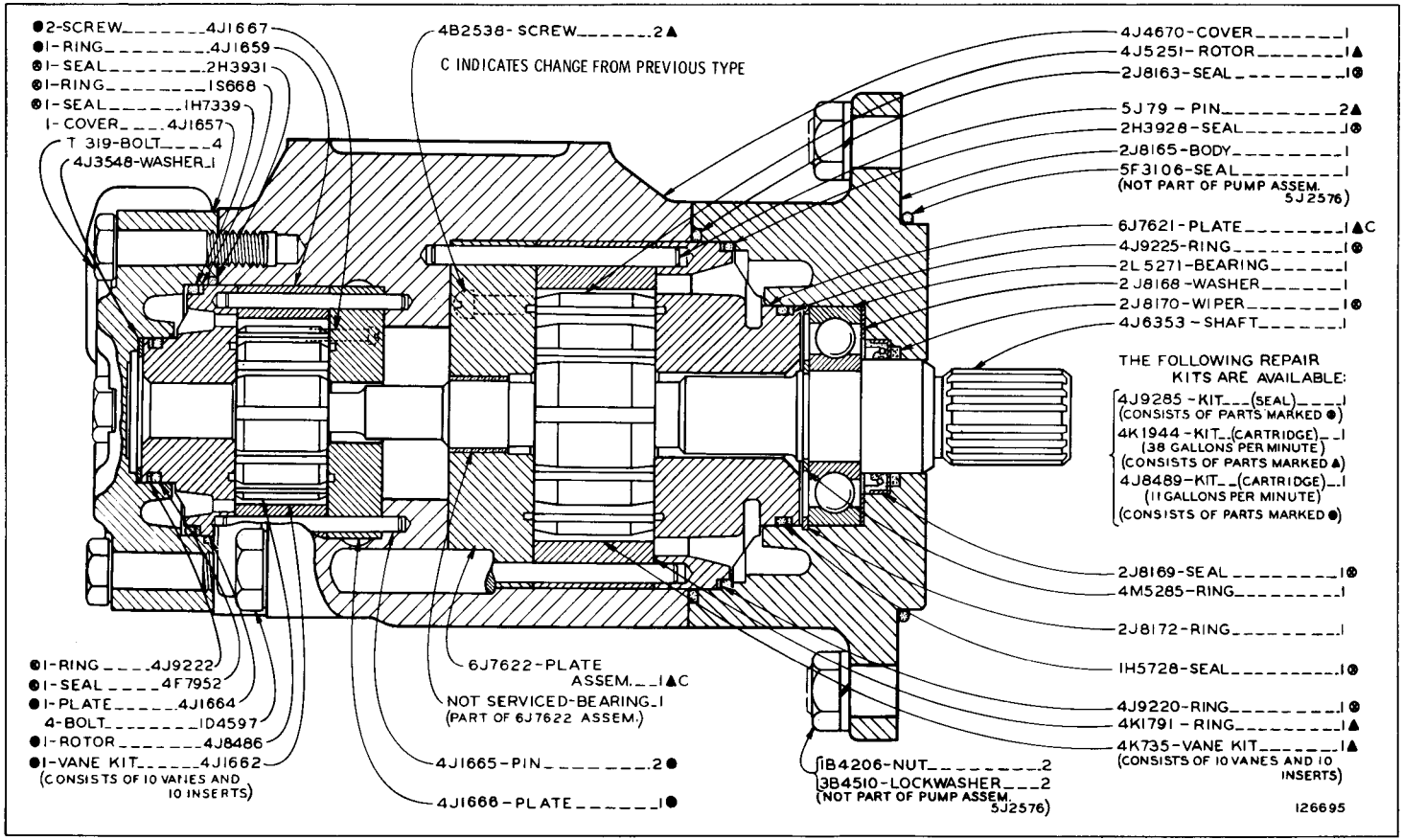

ONLY "CATERPILLAR" PARTS GIVE "CATERPILLAR" PERFORMANCE

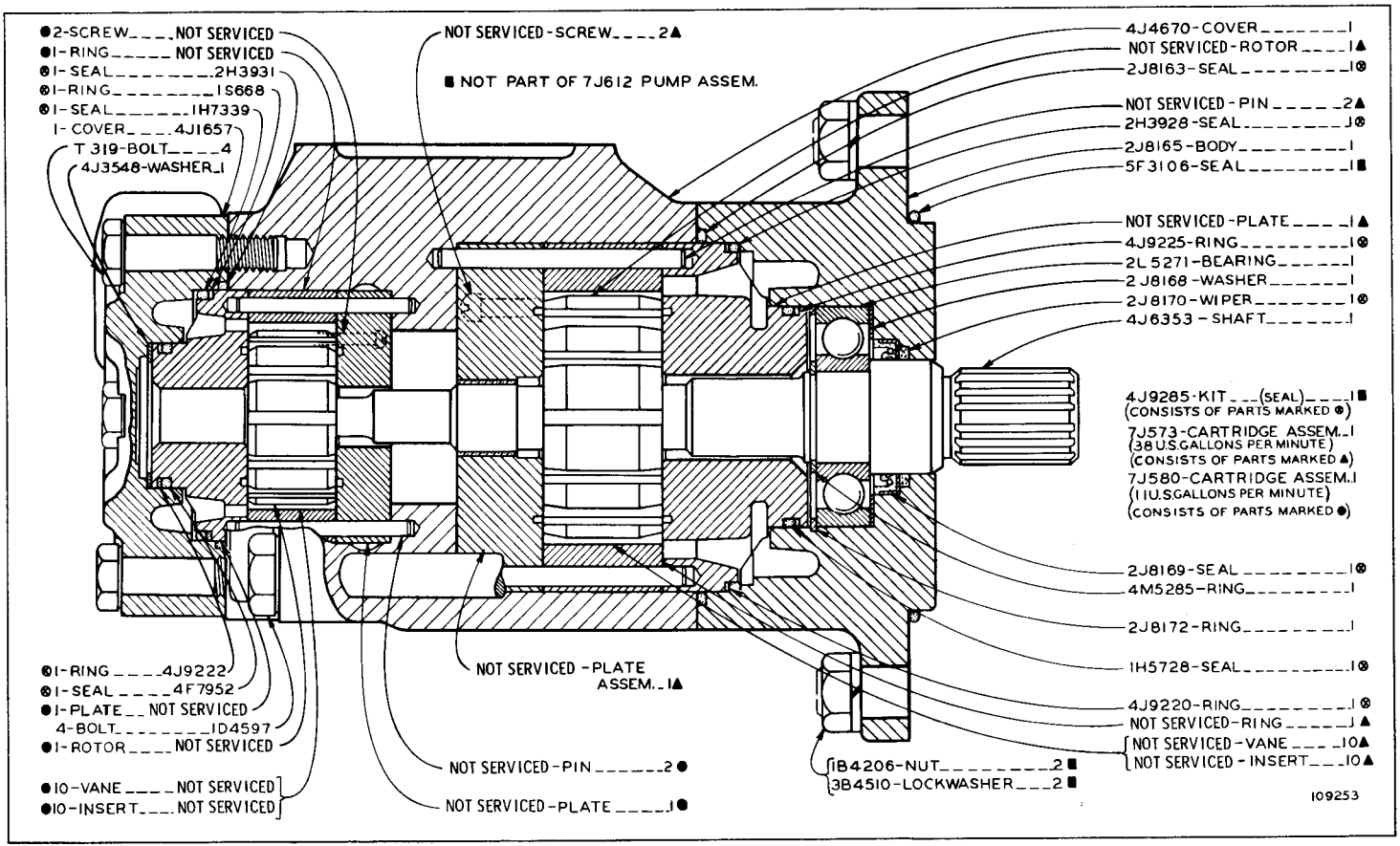

7J612 HYDRAULIC PUMP ASSEMBLY—Type 1

7J612 HYDRAULIC PUMP ASSEMBLY—Type 2

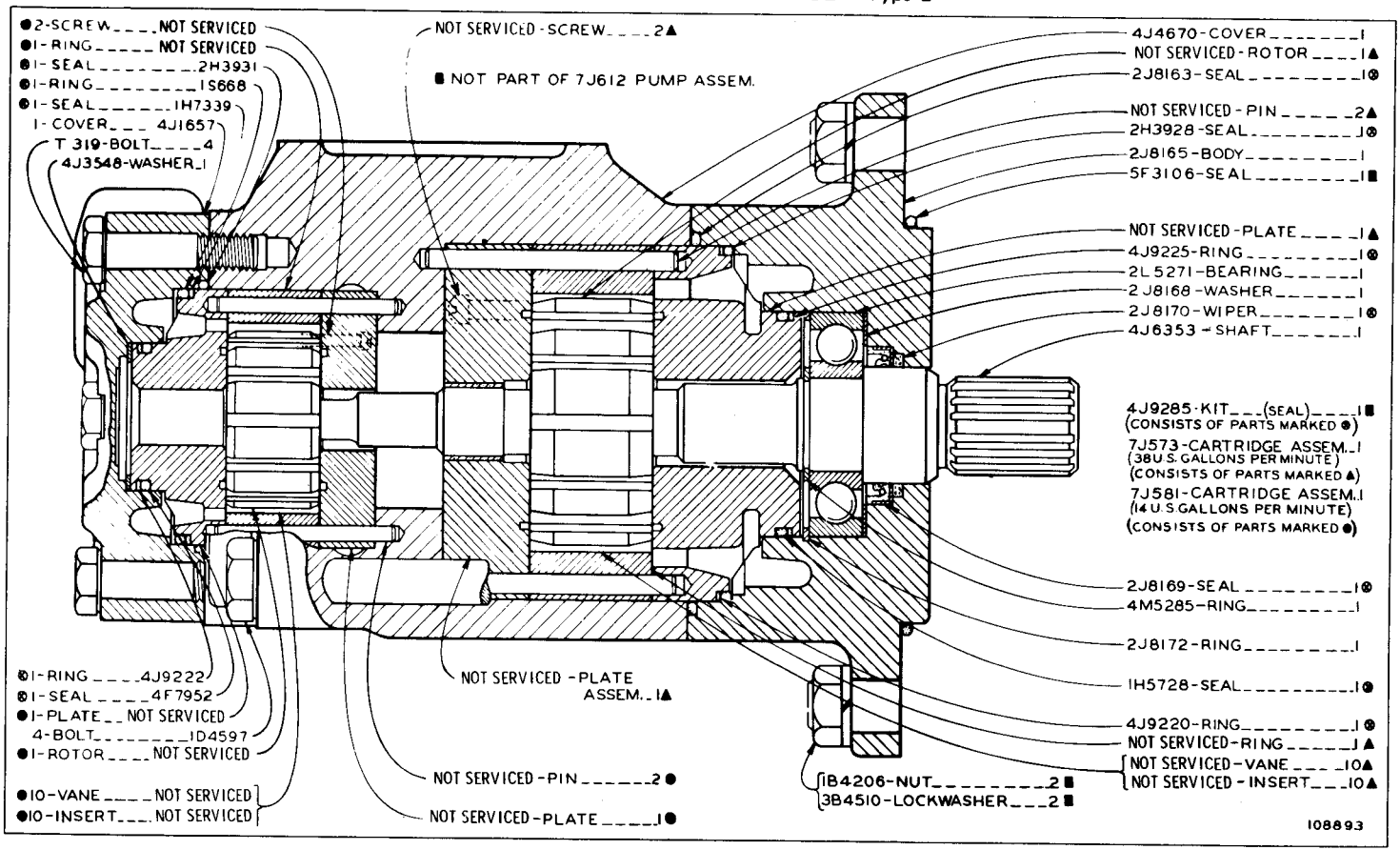

ONLY "CATERPILLAR" PARTS GIVE "CATERPILLAR" PERFORMANCE

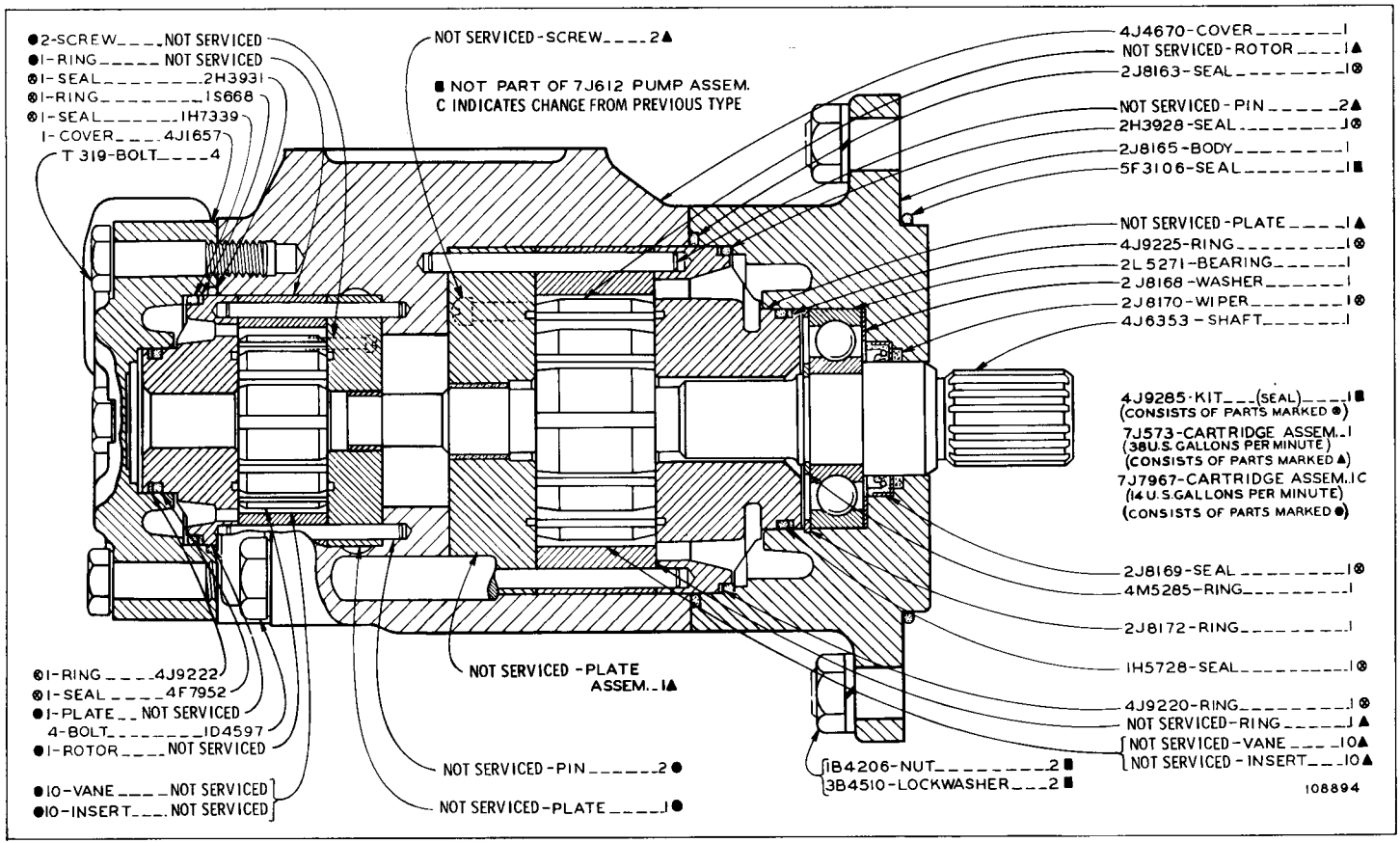

7J612 HYDRAULIC PUMP ASSEMBLY—Type 3—Replaced by 9J5050 shown on Page 18B-3

5J3999 MOUNTING GROUP—As Viewed from Right Hand Side of Tractor—Type 1
183 & 193 Hydraulic Controls Serial No. 27H1 to 27H3235 inclusive and 28H1 to 28H4281 inclusive

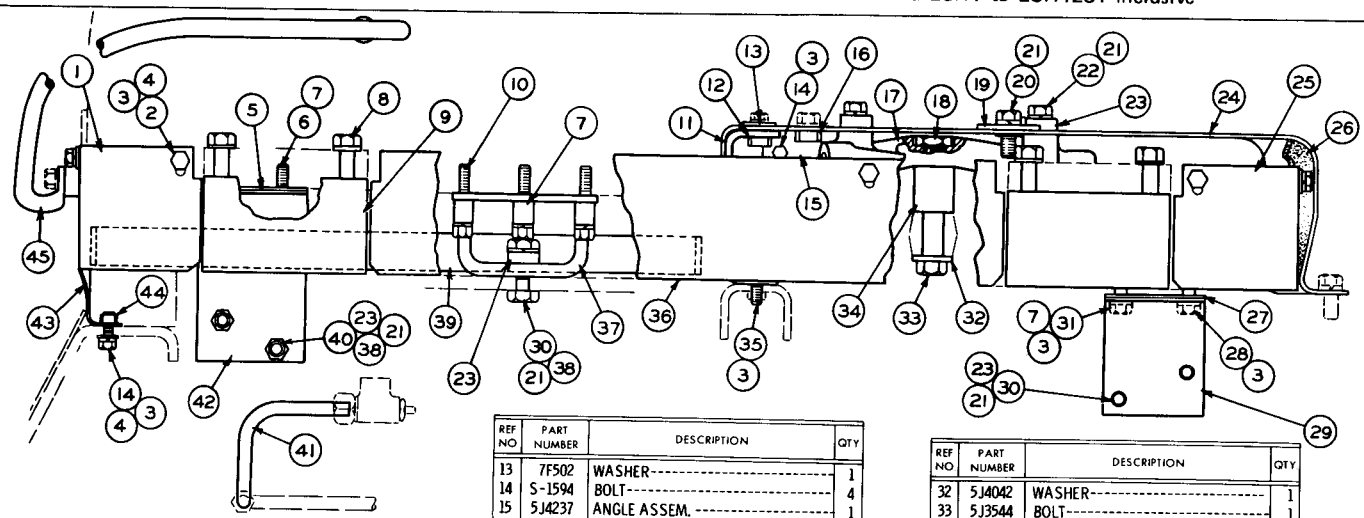

REF NO	PART NUMBER	DESCRIPTION	QTY
1	5J9361	PLATE	1
2	S-509	BOLT	7
3	3B4506	LOCKWASHER	15
4	4B4278	WASHER	9
5	5J6234	SHIM	4
6	L-1143	BOLT	2
7	8B8563	SPACER	9
8	S-1569	BOLT	4
	2S5658	WASHER	4
9	5J9358	BLOCK	2
10	L-2070	BOLT	6
11	5J4219	BRACKET ASSEM.	1
12	1F748	NUT (Part of 5J4219 Bracket Assem.)	1

REF NO	PART NUMBER	DESCRIPTION	QTY
13	7F502	WASHER	1
14	S-1594	BOLT	4
15	5J4237	ANGLE ASSEM.	1
16	1F748	NUT (Part of 5J4237 Angle Assem.)	2
17	5J3589	BRACKET	1
18	1D5118	NUT	1
19	5J7173	WASHER	1
20	7B3235	BOLT	1
21	3B4508	LOCKWASHER	10
22	S-1585	BOLT	3
23	1M1427	BOSS	9
24	5J4233	PLATE	1
25	5J9359	PLATE	1
26	5J8891	PAD	1
27	5J6237	SHIM	4
28	5B9603	BOLT	1
29	5J3637	BRACKET ASSEM.	1
30	2B947	BOLT	4
31	S-1590	BOLT	1

REF NO	PART NUMBER	DESCRIPTION	QTY
32	5J4042	WASHER	1
33	5J3544	BOLT	1
34	5J3656	SPACER	1
35	1A2029	BOLT	2
36	5J9360	PLATE	1
37	5J3622	BRACKET ASSEM.	1
38	1D4719	NUT	4
39	5J7432	COVER ASSEM. -(Left Hand Fender)-	1
	9B1006	WASHER (Part of 5J7432 Cover Assem.)	1
40	1A1460	BOLT	2
41	5J4355	TUBE--------(20.31" Long)-------- (Fuel Lines to Fuel Tank)	1
42	5J3638	BRACKET ASSEM.	1
43	5J4234	COVER ASSEM.	1
44	9F2978	NUT (Part of 5J4234 Cover Assem.)	2
45	5J9599	GRAB IRON-----(Right Hand)------	1
	3S7233	FILM----(183 Hydraulic Control)---	1

94880

ONLY "CATERPILLAR" PARTS GIVE "CATERPILLAR" PERFORMANCE

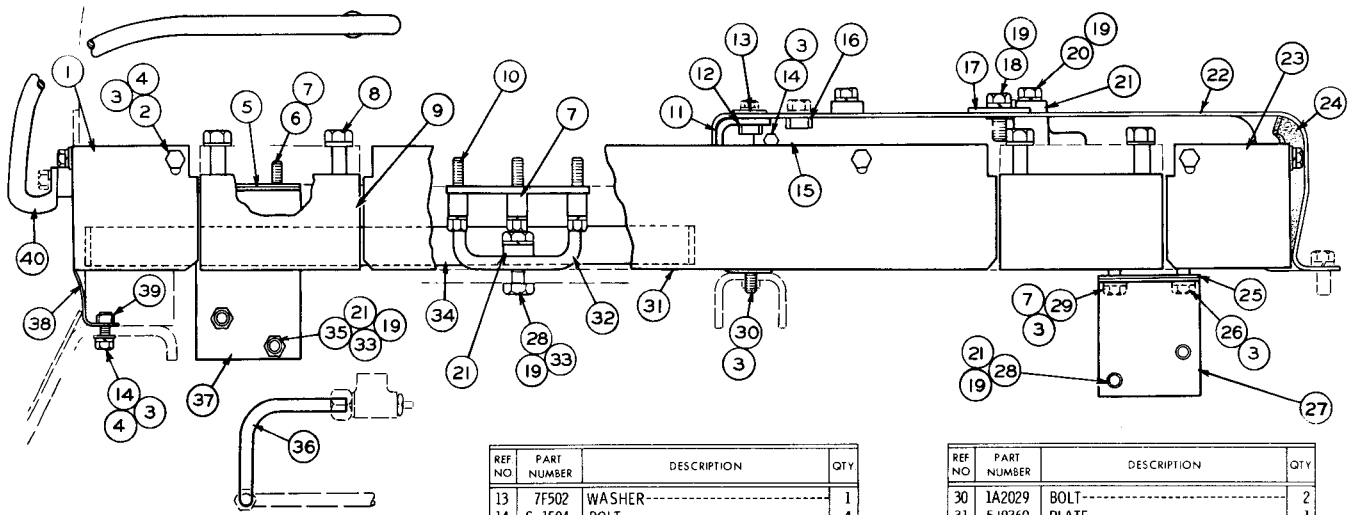

REF NO	PART NUMBER	DESCRIPTION	QTY
1	5J9361	PLATE	1
2	S-509	BOLT	7
3	3B4506	LOCKWASHER	15
4	4B4278	WASHER	9
5	5J6234	SHIM	4
6	L-1143	BOLT	2
7	8B8563	SPACER	9
8	S-1569	BOLT	4
	2S5658	WASHER	4
9	5J9358	BLOCK	2
10	L-2070	BOLT	6
11	5J4219	BRACKET ASSEM.	1
12	1F748	NUT (Part of 5J4219 Bracket Assem.)	1

REF NO	PART NUMBER	DESCRIPTION	QTY
13	7F502	WASHER	1
14	S-1594	BOLT	4
15	5J4237	ANGLE ASSEM.	1
16	1F748	NUT (Part of 5J4237 Angle Assem.)	2
17	5J7173	WASHER	1
18	7B3235	BOLT	1
19	3B4508	LOCKWASHER	10
20	S-1585	BOLT	3
21	1M1427	BOSS	9
22	5J4233	PLATE	1
23	5J9359	PLATE	1
24	5J8891	PAD	1
25	5J6237	SHIM	4
26	5B9603	BOLT	1
27	5J3637	BRACKET ASSEM.	1
28	2B947	BOLT	4
29	S-1590	BOLT	1

REF NO	PART NUMBER	DESCRIPTION	QTY
30	1A2029	BOLT	2
31	5J9360	PLATE	1
32	5J3622	BRACKET ASSEM.	1
33	1D4719	NUT	4
34	5J7432	COVER ASSEM. -(Left Hand Fender)	1
	9B1006	WASHER (Part of 5J7432 Cover Assem.)	1
35	1A1460	BOLT	2
36	5J4355	TUBE---(20.31" Long) (Fuel Lines to Fuel Tank)	1
37	5J3638	BRACKET ASSEM.	1
38	5J4234	COVER ASSEM.	1
39	9F2978	NUT (Part of 5J4234 Cover Assem.)	2
40	5J9599	GRAB IRON---(Right Hand)	1
	3S7233	FILM---(183 Hydraulic Control)	1

97140

5J3999 MOUNTING GROUP—As Viewed from Right Hand Side of Tractor—Type 2
183 & 193 Hydraulic Controls Serial No. 27H1 to 27H3235 inclusive and 28H1 to 28H4281 inclusive

5J3999 MOUNTING GROUP—As Viewed from Right Hand Side of Tractor—Type 3
183 & 193 Hydraulic Controls Serial No. 27H1 to 27H3235 inclusive and 28H1 to 28H4281 inclusive

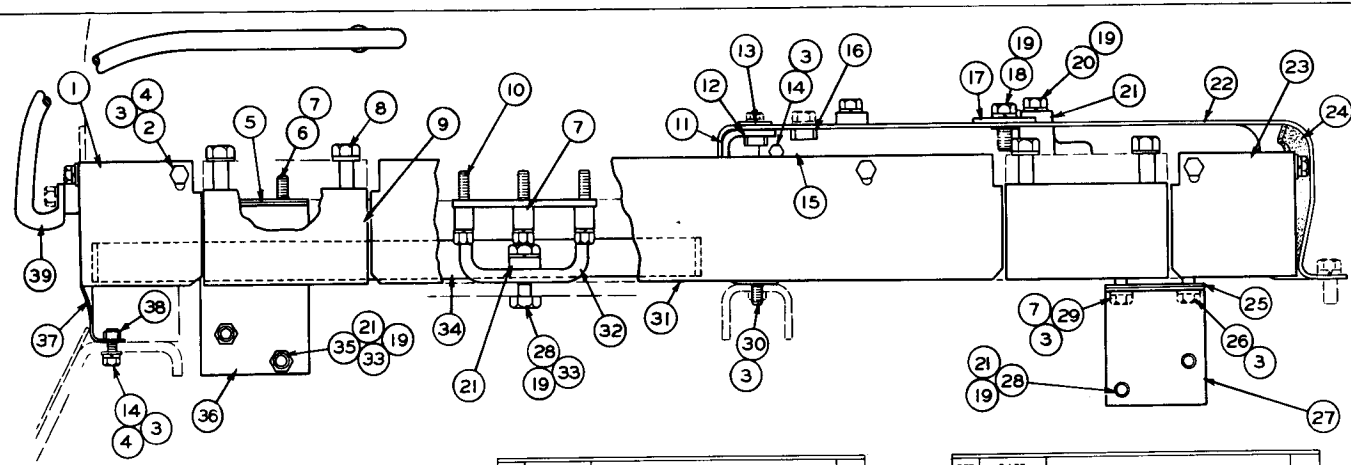

REF NO	PART NUMBER	DESCRIPTION	QTY
1	5J9361	PLATE	1
2	S-509	BOLT	7
3	3B4506	LOCKWASHER	15
4	4B4278	WASHER	9
5	5J6234	SHIM	4
6	L-1143	BOLT	2
7	8B8563	SPACER	9
8	S-1569	BOLT	4
	2S5658	WASHER	4
9	5J9358	BLOCK	2
10	L-2070	BOLT	6
11	5J4219	BRACKET ASSEM.	1
12	1F748	NUT (Part of 5J4219 Bracket Assem.)	1

REF NO	PART NUMBER	DESCRIPTION	QTY
13	7F502	WASHER	1
14	S-1594	BOLT	4
15	5J4237	ANGLE ASSEM.	1
16	1F748	NUT (Part of 5J4237 Angle Assem.)	2
17	5J7173	WASHER	1
18	7B3235	BOLT	1
19	3B4508	LOCKWASHER	10
20	S-1585	BOLT	3
21	1M1427	BOSS	9
22	5J4233	PLATE	1
23	5J9359	PLATE	1
24	5J8891	PAD	1
25	5J6237	SHIM	4
26	5B9603	BOLT	1
27	5J3637	BRACKET ASSEM.	1
28	2B947	BOLT	4
29	S-1590	BOLT	1

REF NO	PART NUMBER	DESCRIPTION	QTY
30	1A2029	BOLT	2
31	5J9360	PLATE	1
32	5J3622	BRACKET ASSEM.	1
33	1D4719	NUT	4
34	5J7432	COVER ASSEM. -(Left Hand Fender)	1
	9B1006	WASHER (Part of 5J7432 Cover Assem.)	1
35	1A1460	BOLT	2
36	5J3638	BRACKET ASSEM.	1
37	5S4810	COVER ASSEM.	1
38	9F2978	NUT (Part of 5S4810 Cover Assem.)	2
39	5J9599	GRAB IRON-----(Right Hand)	1
	3S7233	FILM----(183 Hydraulic Control)	1

97144

ONLY "CATERPILLAR" PARTS GIVE "CATERPILLAR" PERFORMANCE

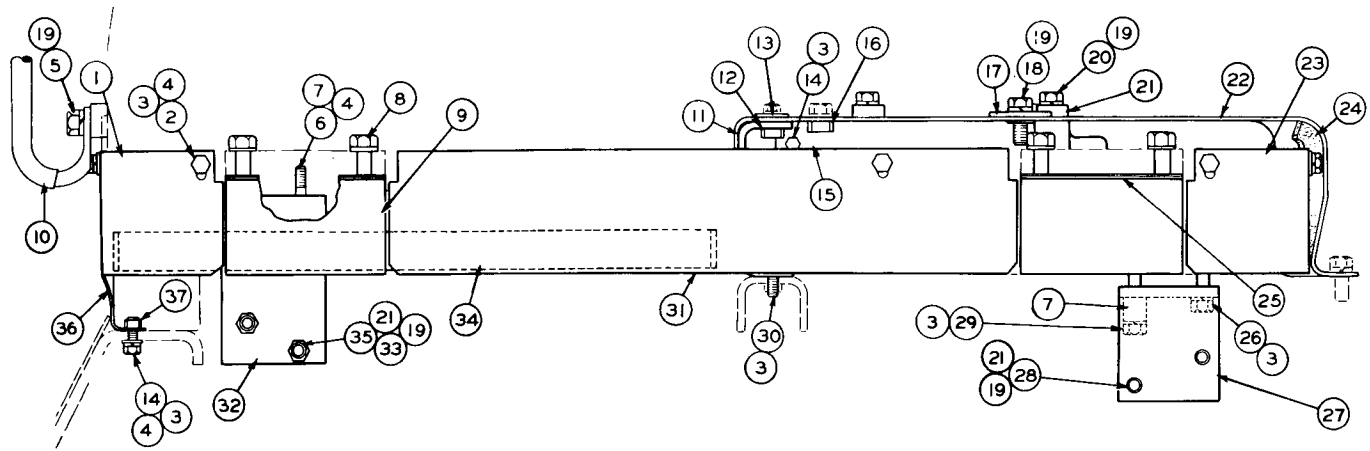

	REF. NO.	PART NUMBER	DESCRIPTION	QTY
	1	5J9361	PLATE	1
	2	S509	BOLT	7
	3	3B4506	LOCKWASHER	15
C	4	4B4278	WASHER	13
C	5	S1621	BOLT	2
	6	L1143	BOLT	2
C	7	8B8563	SPACER	3
	8	S1569	BOLT	4
		2S5658	WASHER	4
	9	5J9358	BLOCK	2
C	10	5S5699	GRAB IRON-------(R. H.)--------	1
	11	5J4219	BRACKET ASSEM.	1
	12	1F748	NUT	1
	13	7F502	WASHER	1
	14	S1594	BOLT	4
	15	5J4237	ANGLE ASSEM.	1
	16	1F748	NUT	2
	17	5J7173	WASHER	1
	18	7B3235	BOLT	1
C	19	3B4508	LOCKWASHER	10
	20	S1585	BOLT	3
C	21	1M1427	BOSS	7
	22	5J4233	PLATE	1
	23	5J9359	PLATE	1
	24	5J8891	PAD	1
C	25	1P5904	SHIM	4
	26	5B9603	BOLT	1
C	27	2P51	BRACKET	1
C	28	2B947	BOLT	2
	29	S1590	BOLT	1
	30	1A2029	BOLT	2
	31	5J9360	PLATE	1
C	32	2P52	BRACKET	1
C	33	1D4719	NUT	2
	34	5J7432	COVER ASSEM. ---(L.H. -Fender)---	1
		9B1006	WASHER	1
	35	1A1460	BOLT	2
	36	5S4810	COVER ASSEM.	1
	37	9F2978	NUT	2
		3S7233	FILM-(183 Hydraulic Control)------	1

C INDICATES CHANGE

137813

5J3999 MOUNTING GROUP—As Viewed from Right Hand Side of Tractor—Type 4
183 & 193 Hydraulic Controls Serial No. 27H1 to 27H3235 inclusive and 28H1 to 28H4281 inclusive

5S6636 MOUNTING GROUP—As Viewed from Right Hand Side of Tractor
183 & 193 Hydraulic Controls Serial No. 27H3236—Up and 28H4282—Up

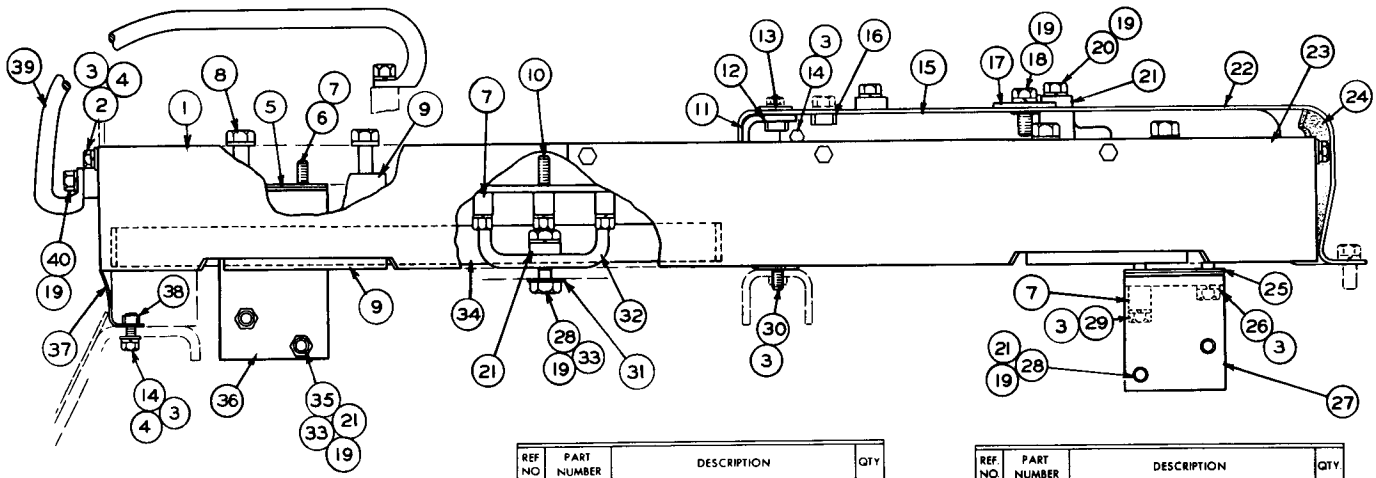

REF NO	PART NUMBER	DESCRIPTION	QTY
1	5S8628	WRAPPER	1
2	L-1351	BOLT	7
3	3B4506	LOCKWASHER	15
4	4B4278	WASHER	9
5	5J6234	SHIM	4
6	L-1143	BOLT	2
7	8B8563	SPACER	9
8	1A8651	BOLT	4
	2S5658	WASHER	4
9	5S6634	BLOCK	2
10	L-2070	BOLT	6
11	5J4219	BRACKET ASSEM.	1
12	1F748	NUT (Part of 5J4219 Bracket Assem.)	1

REF NO	PART NUMBER	DESCRIPTION	QTY
13	7F502	WASHER	1
14	S-1594	BOLT	4
15	5J4237	ANGLE ASSEM.	1
16	1F748	NUT (Part of 5J4237 Angle Assem.)	2
17	5J7173	WASHER	1
18	7B3235	BOLT	1
19	3B4508	LOCKWASHER	12
20	S-1585	BOLT	3
21	1M1427	BOSS	9
22	5J4233	PLATE	1
23	5S6633	WRAPPER	1
24	5J8891	PAD	1
25	5J6237	SHIM	4
26	5B9603	BOLT	1
27	5J3637	BRACKET ASSEM.	1
28	2B947	BOLT	4
29	S-1590	BOLT	1

REF. NO.	PART NUMBER	DESCRIPTION	QTY
30	1A2029	BOLT	2
31	4B4280	WASHER	2
32	5J3622	BRACKET ASSEM.	1
33	1D4719	NUT	4
34	5J7432	COVER ASSEM. -(Left Hand Fender)	1
	9B1006	WASHER (Part of 5J7432 Cover Assem.)	1
35	1A1460	BOLT	2
36	5J3638	BRACKET ASSEM.	1
37	5S4810	COVER ASSEM.	1
38	9F2978	NUT (Part of 5S4810 Cover Assem.)	2
39	5S5699	GRAB IRON-----(Right Hand)-----	1
40	S-1621	BOLT	2
	3S7233	FILM----(183 Hydraulic Control)---	1

120566

ONLY "CATERPILLAR" PARTS GIVE "CATERPILLAR" PERFORMANCE

REF NO	PART NUMBER	DESCRIPTION	QTY
1	S1594	BOLT	4
2	3B4506	LOCKWASHER	19
3	4B4278	WASHER	9
4	5J3638	BRACKET ASSEM.	1
	5J6234	SHIM	4
5	L1143	BOLT	2
6	8B8563	SPACER	9
7	5J3622	BRACKET ASSEM.	1
8	7F502	WASHER	1
9	8S7346	PLATE ASSEM.	1
10	1F748	NUT	2
11	8M6254	BLOCK	1
12	9F2978	NUT	1
13	2H8382	LUG	3
		(Parts of 8S7346 Assem.)	

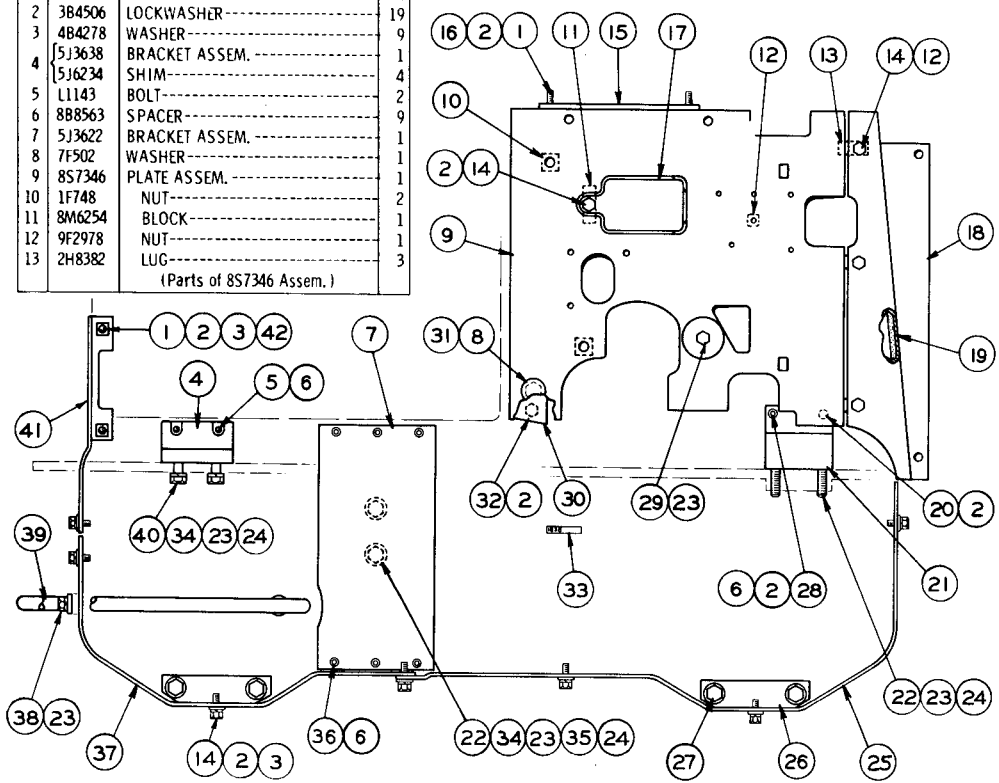

REF NO.	PART NUMBER	DESCRIPTION	QTY
14	L1351	BOLT	11
15	5J4237	ANGLE ASSEM.	1
16	1F748	NUT	2
		(Part of 5J4237 Assem.)	
17	7S4775	PLATE ASSEM.	1
18	7S4739	PLATE	1
19	5J8891	PAD	1
20	5B9603	BOLT	1
21	5J3637	BRACKET ASSEM.	1
	5J6237	SHIM	4
22	2B947	BOLT	4
23	3B4508	LOCKWASHER	9
24	1M1427	BOSS	6
25	5S6633	WRAPPER	1
26	5S6634	BLOCK	2
27	1A8651	BOLT	4
	2S5658	WASHER	4
28	S1590	BOLT	1
29	7B3235	BOLT	1
	5J7173	WASHER	1
30	5J4219	BRACKET ASSEM.	1
31	1F748	NUT	1
		(Part of 5J4219 Assem.)	
32	1A2029	BOLT	2
33	3S7233	FILM---(183B Hydraulic Control)	1
34	1D4719	NUT	4
35	4B4280	WASHER	2
36	L2070	BOLT	6
37	5S8628	WRAPPER	1
38	S1621	BOLT	2
39	5S5699	GRAB IRON	1
40	1A1460	BOLT	2
41	5S4810	COVER ASSEM.	1
42	9F2978	NUT	2
		(Part of 5S4810 Assem.)	
	5J7432	COVER ASSEM.	1
		(Not Shown - Mounted on Left Hand Fender)	

106341

8S5872 MOUNTING GROUP—Right Hand Side View—Type 1

8S5872 MOUNTING GROUP—Right Hand Side View—Type 2

C INDICATES CHANGE FROM PREVIOUS TYPE

	REF. NO.	PART NUMBER	DESCRIPTION	QTY
C	1	S1594	BOLT	2
C	2	3B4506	LOCKWASHER	18
C	3	4B4278	WASHER	8
	4	5J3638	BRACKET ASSEM.	1
		5J6234	SHIM	4
	5	L1143	BOLT	2
	6	8B8563	SPACER	9
	7	5J3622	BRACKET ASSEM.	1
	8	7F502	WASHER	1
	9	8S7346	PLATE ASSEM.	1
C	10	3D7229	PLATE	1
	11	8M6254	BLOCK	1
	12	9F2978	NUT	1
	13	2H8382	LUG	3
			(Parts of 8S7346 Assem.)	

REF. NO.	PART NUMBER	DESCRIPTION	QTY
14	L1351	BOLT	11
15	5J4237	ANGLE ASSEM.	1
16	1F748	NUT	2
		(Part of 5J4237 Assem.)	
17	7S4775	PLATE ASSEM.	1
18	7S4739	PLATE	1
19	5J8891	PAD	1
20	5B9603	BOLT	1
21	5J3637	BRACKET ASSEM.	1
	5J6237	SHIM	4
22	2B947	BOLT	4
23	3B4508	LOCKWASHER	9
24	1M1427	BOSS	6
25	5S6633	WRAPPER	1
26	5S6634	BLOCK	2
27	1A8651	BOLT	4
	2S5658	WASHER	4
28	S1590	BOLT	1
C 29	7B3235	BOLT	3
30	5J4219	BRACKET ASSEM.	1
31	1F748	NUT	1
		(Part of 5J4219 Assem.)	
32	1A2029	BOLT	2
33	3S7233	FILM---(183B Hydraulic Control)	1
34	1D4719	NUT	4
C 35	4B4280	WASHER------(.093" Thick)	4
36	L2070	BOLT	6
37	5S8628	WRAPPER	1
C 38	9S3323	WASHER------(.125" Thick)	4
C 39	9S3539	GRAB IRON	1
40	1A1460	BOLT	2
C 41	5S4812	COVER	1
C 42	S1588	BOLT	1
43	5J7173	WASHER	1
	5J7432	COVER ASSEM. (Not Shown - Mounted on L.H. Fender)	1

107880

ONLY "CATERPILLAR" PARTS GIVE "CATERPILLAR" PERFORMANCE

8S5872 MOUNTING GROUP—Right Hand Side View—Type 3

	REF. NO.	PART NUMBER	DESCRIPTION	QTY
	1	S1594	BOLT	2
	2	3B4506	LOCKWASHER	18
	3	4B4278	WASHER	8
C	4	2P52	BRACKET	1
	5	L1143	BOLT	2
C	6	8B8563	SPACER	3
C	7	1P5904	SHIM	4
	8	7F502	WASHER	1
	9	8S7346	PLATE ASSEM.	1
	10	3D7229	PLATE	1
	11	8M6254	BLOCK	1
	12	9F2978	NUT	1
	13	2H8382	LUG	3
	14	L1351	BOLT	11
	15	5J4237	ANGLE ASSEM.	1
	16	1F748	NUT	2
	17	7S4775	PLATE ASSEM.	1
	18	7S4739	PLATE	1
	19	5J8891	PAD	1
	20	5B9603	BOLT	1
	21	2P51	BRACKET	1
	22	2B947	BOLT	2
	23	3B4508	LOCKWASHER	7
	24	1M1427	BOSS	4
	25	5S6633	WRAPPER	1
	26	5S6634	BLOCK	2
	27	1A8651	BOLT	4
		2S5658	WASHER	4
	28	S1590	BOLT	1
	29	7B3235	BOLT	3
	30	5J4219	BRACKET ASSEM.	1
	31	1F748	NUT	1
	32	1A2029	BOLT	2
	33	3S7233	FILM---(183B Hydraulic Control)	1
	34	1D4719	NUT	2
C	35	4B4280	WASHER-------(.093" Thick)-----	2
C	36	5J7432	COVER ASSEM.	1
	37	5S8628	WRAPPER	1
	38	9S3323	WASHER-------(.125" Thick)-----	4
	39	9S3539	GRAB IRON	1
	40	1A1460	BOLT	1
	41	5S4812	COVER	1
	42	S1588	BOLT	1
	43	5J7173	WASHER	1

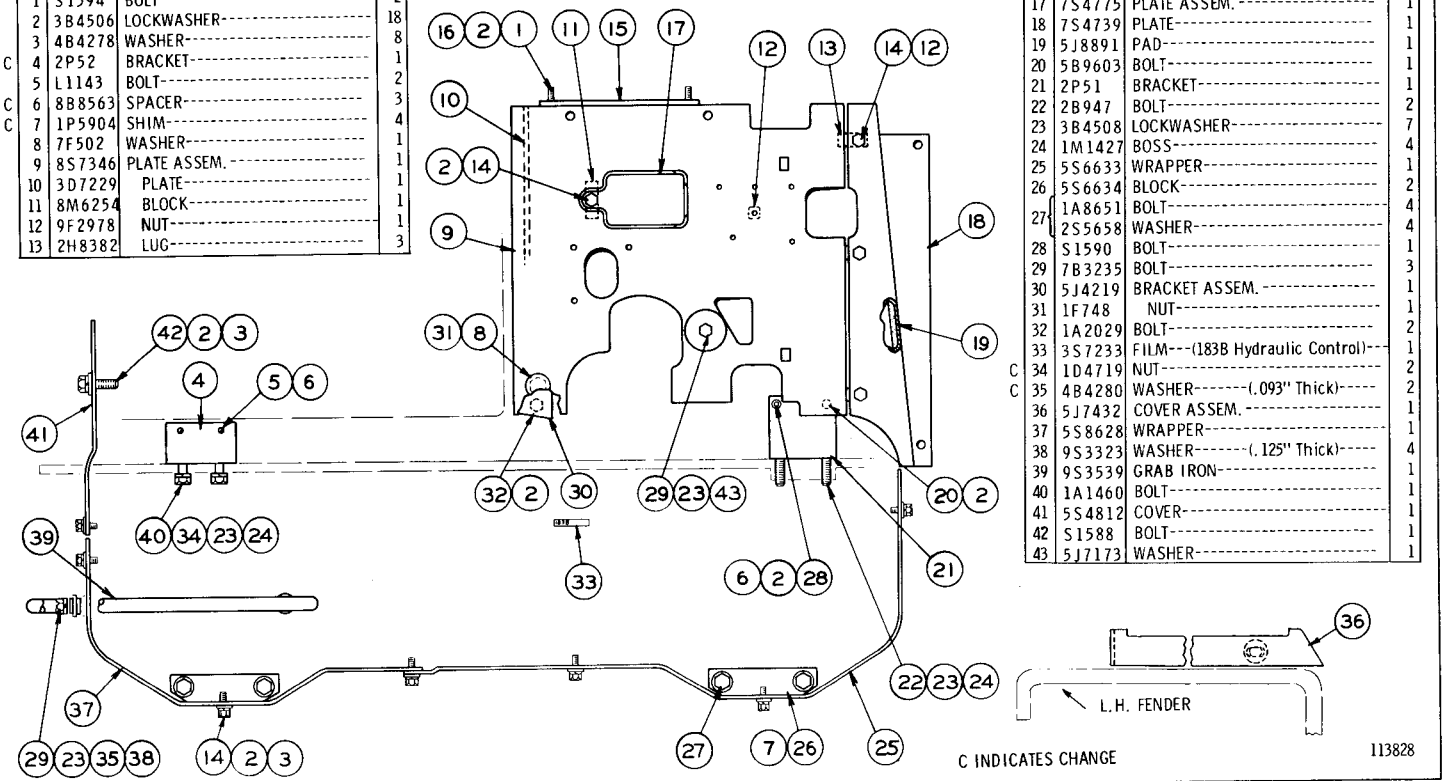

ONLY "CATERPILLAR" PARTS GIVE "CATERPILLAR" PERFORMANCE

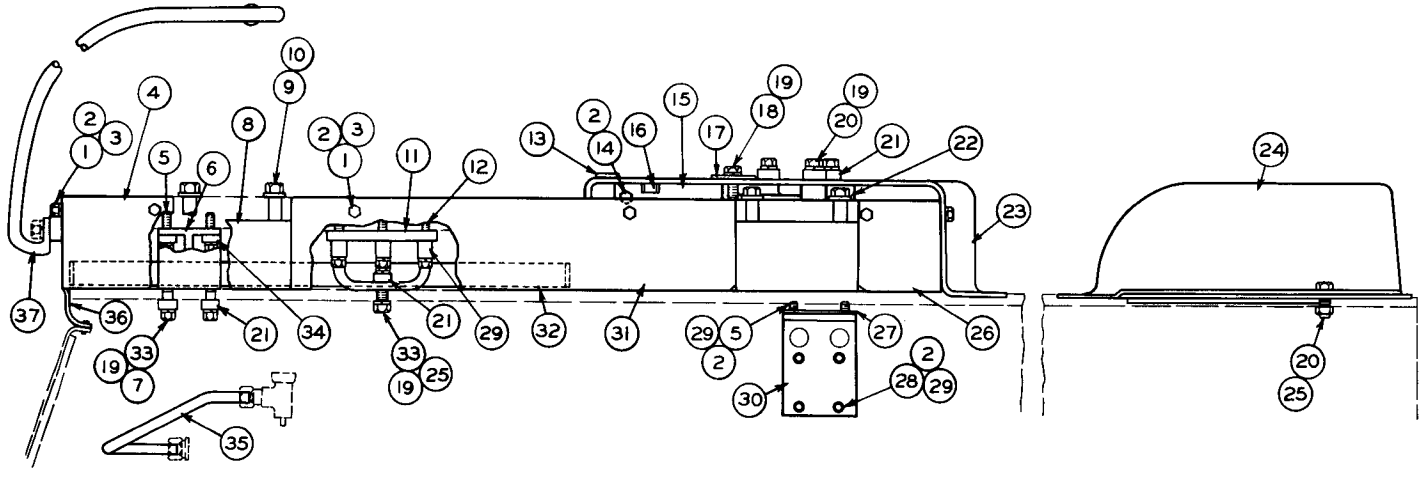

REF NO	PART NUMBER	DESCRIPTION	QTY
1	S-509	BOLT	7
2	3B4506	LOCKWASHER	15
3	4B4278	WASHER	7
4	5J9361	PLATE	1
5	S-1590	BOLT	4
6	5J4325	BRACKET ASSEM.	1
7	1F748	NUT (Part of 5J4325 Bracket Assem.)	2
8	5J9358	BLOCK	2
9	S-1569	BOLT	4
10	2S5658	WASHER	4
11	5J3622	BRACKET ASSEM.	1
12	L-2070	BOLT	6

REF NO	PART NUMBER	DESCRIPTION	QTY
13	7F502	WASHER	1
14	S-1594	BOLT	2
15	5J4237	ANGLE ASSEM.	1
16	1F748	NUT (Part of 5J4237 Angle Assem.)	2
17	5J7173	WASHER	1
18	7B3235	BOLT	1
19	3B4508	LOCKWASHER	8
20	S-1585	BOLT	4
21	1M1427	BOSS	7
22	5J4643	BRACKET	1
23	5J4728	PLATE	1
24	5J5135	COVER	1
25	1D4719	NUT	3

REF NO	PART NUMBER	DESCRIPTION	QTY
26	5J9359	PLATE	1
27	5J7100	SHIM	4
28	1C2251	BOLT	4
29	8B8563	SPACER	12
30	5J4337	BRACKET ASSEM.	1
31	5J9360	PLATE	1
32	5J7102	COVER ASSEM. (Left Hand)	1
33	2B947	BOLT	4
34	5H3124	SPACER	2
35	5J5133	TUBE (30.79" Long) (Fuel Lines to Fuel Tank)	1
36	5J4770	COVER ASSEM. (Right Hand)	1
37	5J9599	GRAB IRON (Right Hand)	1
	3S7234	FILM (193 Hydraulic Control)	1

94879

5J4392 MOUNTING GROUP—As Viewed from Right Hand Side of Tractor—Type 1
183 & 193 Hydraulic Controls Serial No. 27H1 to 27H3235 inclusive and 28H1 to 28H4281 inclusive

5J4392 MOUNTING GROUP—As Viewed from Right Hand Side of Tractor—Type 2
183 & 193 Hydraulic Controls Serial No. 27H1 to 27H3235 inclusive and 28H1 to 28H4281 inclusive

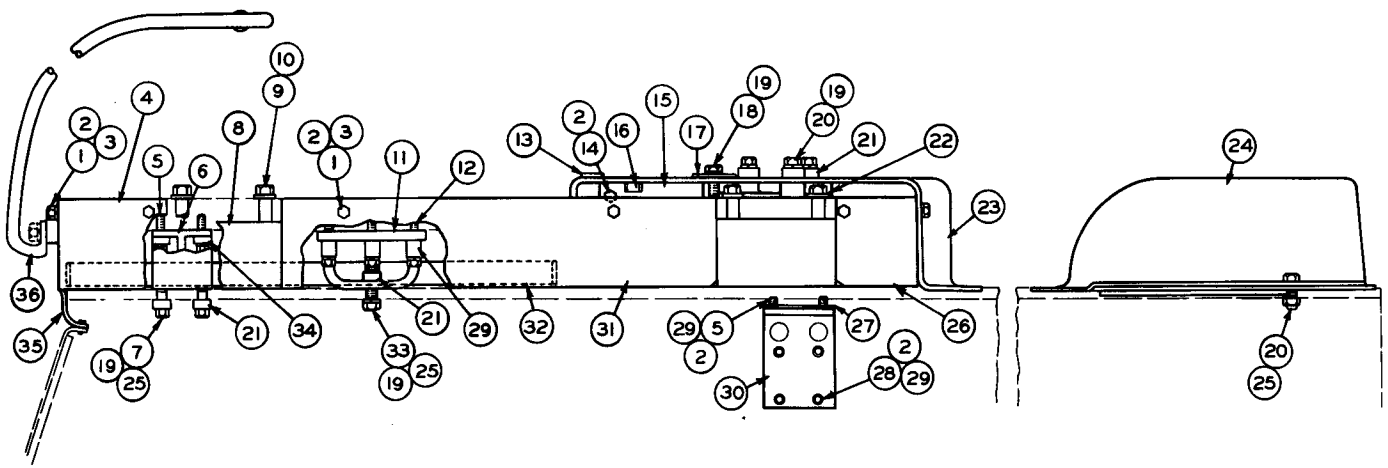

REF NO	PART NUMBER	DESCRIPTION	QTY
1	S-509	BOLT	7
2	3B4506	LOCKWASHER	15
3	4B4278	WASHER	7
4	5J9361	PLATE	1
5	S-1590	BOLT	4
6	6J1008	BRACKET	1
7	1A1460	BOLT	2
8	5J9358	BLOCK	2
9	S-1569	BOLT	4
10	2S5658	WASHER	4
11	5J3622	BRACKET ASSEM.	1
12	L-2070	BOLT	6

REF NO	PART NUMBER	DESCRIPTION	QTY
13	7F502	WASHER	1
14	S-1594	BOLT	2
15	5J4237	ANGLE ASSEM.	1
16	1F748	NUT (Part of 5J4237 Angle Assem.)	2
17	5J7173	WASHER	1
18	7B3235	BOLT	1
19	3B4508	LOCKWASHER	8
20	S-1585	BOLT	4
21	1M1427	BOSS	7
22	5J4643	BRACKET	1
23	5J4728	PLATE	1
24	5J5135	COVER	1
25	1D4719	NUT	5

REF NO	PART NUMBER	DESCRIPTION	QTY
26	5J9359	PLATE	1
27	5J7100	SHIM	4
28	1C2251	BOLT	4
29	8B8563	SPACER	12
30	5J4337	BRACKET ASSEM.	1
31	5J9360	PLATE	1
32	5J7102	COVER ASSEM. (Left Hand)	1
33	2B947	BOLT	2
34	5H3124	SPACER	2
35	5S4811	COVER ASSEM. (Right Hand)	1
36	5J9599	GRAB IRON (Right Hand)	1
	3S7234	FILM (193 Hydraulic Control)	1

97154

ONLY "CATERPILLAR" PARTS GIVE "CATERPILLAR" PERFORMANCE

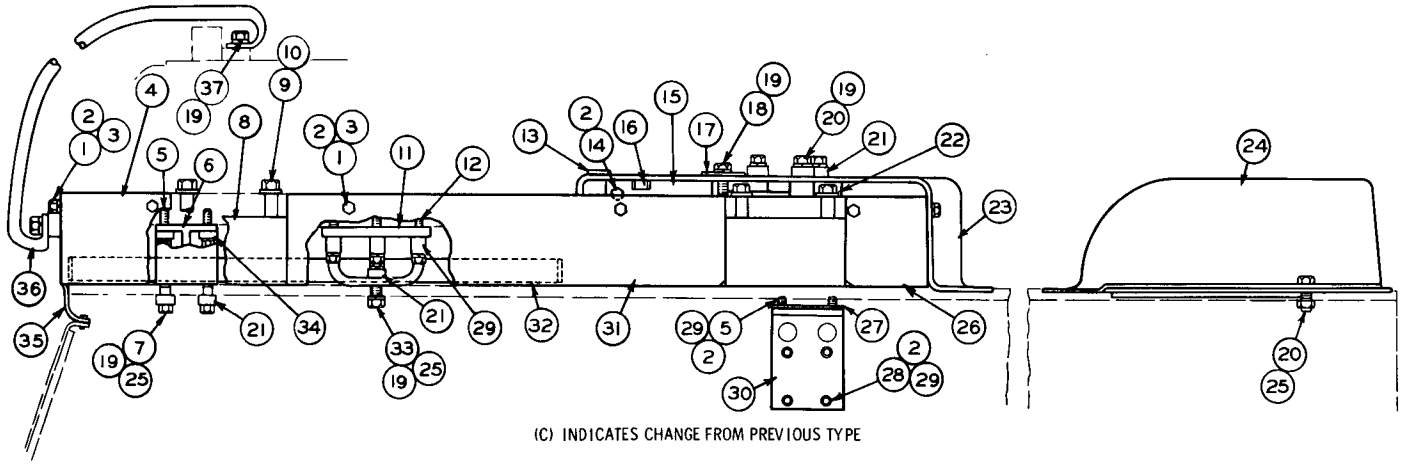

(C) INDICATES CHANGE FROM PREVIOUS TYPE

REF NO	PART NUMBER	DESCRIPTION	QTY
1	S-509	BOLT	7
2	3B4506	LOCKWASHER	15
3	4B4278	WASHER	7
4	5J9361	PLATE	1
5	S-1590	BOLT	4
6	6J1008	BRACKET	1
7	1A1460	BOLT	2
8	5J9358	BLOCK	2
9	S-1569	BOLT	4
10	2S5658	WASHER	4
11	5J3622	BRACKET ASSEM.	1
12	L-2070	BOLT	6

REF NO	PART NUMBER	DESCRIPTION	QTY
13	7F502	WASHER	1
14	S-1594	BOLT	2
15	5J4237	ANGLE ASSEM.	1
16	1F748	NUT	2
		(Part of 5J4237 Angle Assem.)	
17	5J7173	WASHER	1
18	7B3235	BOLT	1
(C) 19	3B4508	LOCKWASHER	10
20	S-1585	BOLT	4
21	1M1427	BOSS	7
22	5J4643	BRACKET	1
23	5J4728	PLATE	1
24	5J5135	COVER	1
25	1D4719	NUT	5

REF NO.	PART NUMBER	DESCRIPTION	QTY
26	5J9359	PLATE	1
27	5J7100	SHIM	4
28	1C2251	BOLT	4
29	8B8563	SPACER	12
30	5J4337	BRACKET ASSEM.	1
31	5J9360	PLATE	1
32	5J7102	COVER ASSEM. -(Left Hand)	1
33	2B947	BOLT	2
34	5H3124	SPACER	2
(C) 35	5S4813	COVER -(Right Hand)	1
(C) 36	5S5699	GRAB IRON -(Right Hand)	1
	3S7234	FILM -(193 Hydraulic Control)	1
(C) 37	S-1621	BOLT	2

120567

5J4392 MOUNTING GROUP—As Viewed from Right Hand Side of Tractor—Type 3
183 & 193 Hydraulic Controls Serial No. 27H1 to 27H3235 inclusive and 28H1 to 28H4281 inclusive

5S6638 MOUNTING GROUP—As Viewed from Right Hand Side of Tractor
183 & 193 Hydraulic Controls Serial No. 27H3236—Up and 28H4282—Up

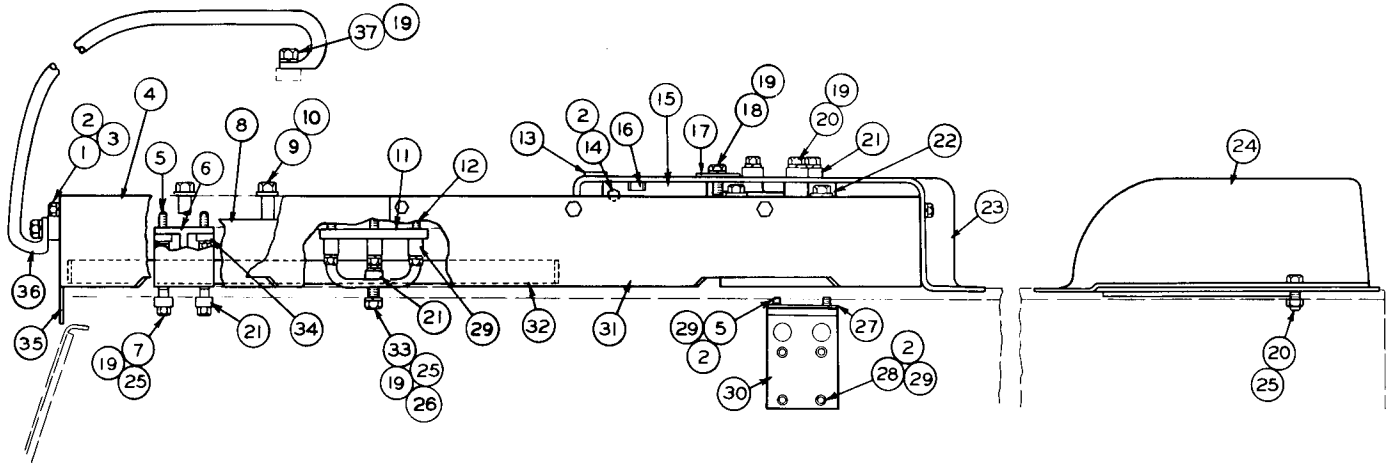

REF NO	PART NUMBER	DESCRIPTION	QTY
1	L-1351	BOLT	7
2	3B4506	LOCKWASHER	15
3	4B4278	WASHER	7
4	5S8628	WRAPPER	2
5	S-1590	BOLT	4
6	6J1008	BRACKET	1
7	1A1460	BOLT	2
8	5S6634	BLOCK	2
9	1A8651	BOLT	4
10	2S5658	WASHER	4
11	5J3622	BRACKET ASSEM.	1
12	L-2070	BOLT	6

REF NO	PART NUMBER	DESCRIPTION	QTY
13	7F502	WASHER	1
14	S-1594	BOLT	2
15	5J4237	ANGLE ASSEM.	1
16	1F748	NUT (Part of 5J4237 Angle Assem.)	2
17	5J7173	WASHER	1
18	7B3235	BOLT	1
19	3B4508	LOCKWASHER	10
20	S-1585	BOLT	4
21	1M1427	BOSS	7
22	5J4643	BRACKET	1
23	5J4728	PLATE	1
24	5J5135	COVER	1
25	1D4719	NUT	5

REF NO	PART NUMBER	DESCRIPTION	QTY
26	4B4280	WASHER	2
27	5J7100	SHIM	4
28	1C2251	BOLT	4
29	8B8563	SPACER	12
30	5J4337	BRACKET ASSEM.	1
31	5S6633	WRAPPER	1
32	5J7102	COVER ASSEM. ----(Left Hand)----	1
33	2B947	BOLT	2
34	5H3124	SPACER	2
35	5S4813	COVER---------(Right Hand)------	1
36	5S5699	GRAB IRON------(Right Hand)-----	1
37	S-1621	BOLT	2
	3S7234	FILM----(193 Hydraulic Control)---	1

120568

ONLY "CATERPILLAR" PARTS GIVE "CATERPILLAR" PERFORMANCE

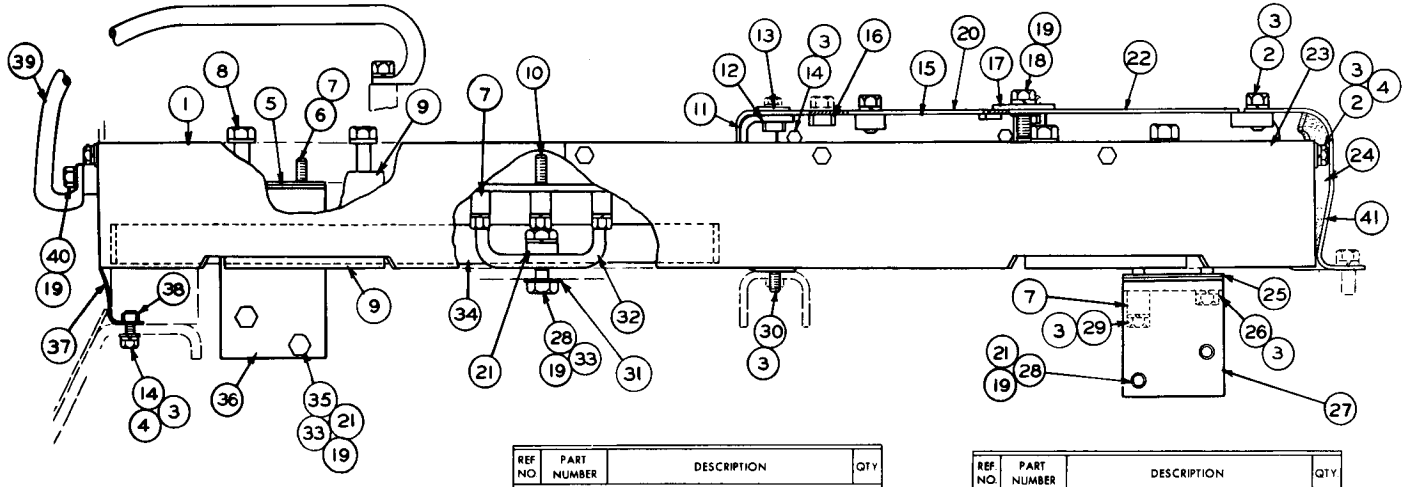

REF NO	PART NUMBER	DESCRIPTION	QTY
1	5S8628	WRAPPER	1
2	L 1351	BOLT	11
3	3B4506	LOCKWASHER	19
4	4B4278	WASHER	9
5	5J6234	SHIM	4
6	L 1143	BOLT	2
7	8B8563	SPACER	9
8	1A8651	BOLT	4
	2S5658	WASHER	4
9	5S6634	BLOCK	2
10	L 2070	BOLT	6
11	5J4219	BRACKET ASSEM.	1
12	1F748	NUT (Part of 5J4219 Bracket Assem.)	1

REF NO	PART NUMBER	DESCRIPTION	QTY
13	7F502	WASHER	1
14	S 1594	BOLT	4
15	5J4237	ANGLE ASSEM.	1
16	1F748	NUT (Part of 5J4237 Angle Assem.)	2
17	5J7173	WASHER	1
18	7B3235	BOLT	1
19	3B4508	LOCKWASHER	9
20	7S4775	PLATE ASSEM.	1
21	1M1427	BOSS	6
22	7S4737	PLATE ASSEM.	1
23	5S6633	WRAPPER	1
24	5J8891	PAD	1
25	5J6237	SHIM	4
26	5B9603	BOLT	1
27	5J3637	BRACKET ASSEM.	1
28	2B947	BOLT	4
29	S 1590	BOLT	1

REF NO.	PART NUMBER	DESCRIPTION	QTY
30	1A2029	BOLT	2
31	4B4280	WASHER	2
32	5J3622	BRACKET ASSEM.	1
33	1D4719	NUT	4
34	5J7432	COVER ASSEM. -(Left Hand Fender)	1
	9B1006	WASHER (Part of 5J7432 Cover Assem.)	1
35	1A1460	BOLT	2
36	5J3638	BRACKET ASSEM.	1
37	5S4810	COVER ASSEM.	1
38	9F2978	NUT (Part of 5S4810 Cover Assem.)	2
39	5S5699	GRAB IRON-----(Right Hand)	1
40	S 1621	BOLT	2
41	7S4739	PLATE	1
	3S7233	FILM----(183 Hydraulic Control)	1

7S4769 MOUNTING GROUP—As Viewed from Right Hand Side of Tractor—Type 1

7S4769 MOUNTING GROUP—As Viewed from Right Hand Side of Tractor—Type 2

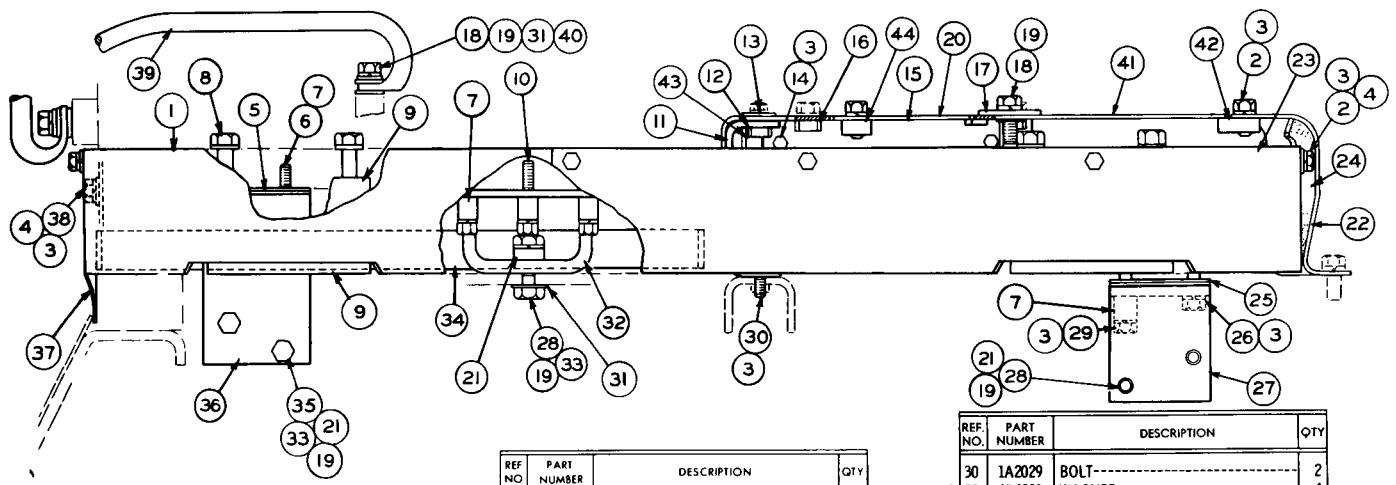

C INDICATES CHANGE FROM PREVIOUS TYPE

REF NO	PART NUMBER	DESCRIPTION	QTY
1	5S8628	WRAPPER	1
2	L 1351	BOLT	11
C 3	3B4506	LOCKWASHER	18
C 4	4B4278	WASHER	8
5	5J6234	SHIM	4
6	L 1143	BOLT	2
7	8B8563	SPACER	9
8	1A8651	BOLT	4
	2S5658	WASHER	4
9	5S6634	BLOCK	2
10	L 2070	BOLT	6
11	5J4219	BRACKET ASSEM.	1
12	1F748	NUT (Part of 5J4219 Bracket Assem.)	1

REF NO	PART NUMBER	DESCRIPTION	QTY
13	7F502	WASHER	1
C 14	S 1594	BOLT	2
15	5J4237	ANGLE ASSEM.	1
16	1F748	NUT (Part of 5J4237 Angle Assem.)	2
17	5J7173	WASHER	1
C 18	7B3235	BOLT	3
19	3B4508	LOCKWASHER	9
20	7S4775	PLATE ASSEM.	1
21	1M1427	BOSS	6
22	7S4739	PLATE	1
23	5S6633	WRAPPER	1
24	5J8891	PAD	1
25	5J6237	SHIM	4
26	5B9603	BOLT	1
27	5J3637	BRACKET ASSEM.	1
28	2B947	BOLT	4
29	S 1590	BOLT	1

REF NO.	PART NUMBER	DESCRIPTION	QTY
30	1A2029	BOLT	2
C 31	4B4280	WASHER	4
32	5J3622	BRACKET-ASSEM.	1
33	1D4719	NUT	4
34	5J7432	COVER ASSEM.-(Left Hand Fender)	1
	9B1006	WASHER (Part of 5J7432 Assem.)	1
35	1A1460	BOLT	2
36	5J3638	BRACKET ASSEM.	1
C 37	5S4812	COVER	1
C 38	S1588	BOLT	1
C 39	9S3539	GRAB IRON	1
C 40	9S3323	WASHER	4
41	7S4737	PLATE ASSEM.	1
42	2H8382	LUG	3
43	3D7229	STRIP	1
44	8M6254	BLOCK (Parts of 7S4737 Assem.)	1
	3S7233	FILM---(183 Hydraulic Control) (Not Shown)	1

107411

ONLY "CATERPILLAR" PARTS GIVE "CATERPILLAR" PERFORMANCE

7S4769 MOUNTING GROUP—As Viewed from Right Hand Side of Tractor—Type 3

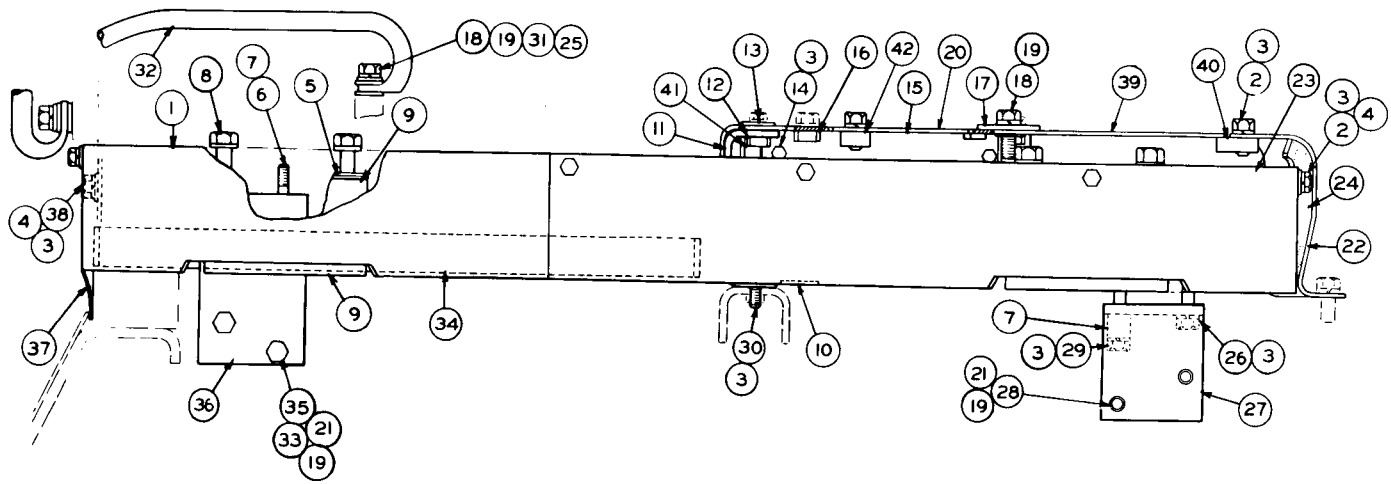

C INDICATES CHANGE

C	REF. NO.	PART NUMBER	DESCRIPTION	QTY
	1	5S8628	WRAPPER	1
	2	L1351	BOLT	11
	3	3B4506	LOCKWASHER	18
	4	4B4278	WASHER	8
C	5	1P5904	SHIM	4
	6	L1143	BOLT	2
C	7	8B8563	SPACER	3
	8	1A8651	BOLT	4
		2S5658	WASHER	4
	9	5S6634	BLOCK	2
	10	3S7233	FILM---(183 Hydraulic Control)	1
	11	5J4219	BRACKET ASSEM.	1
	12	1F748	NUT	1
	13	7F502	WASHER	1
	14	S1594	BOLT	2
	15	5J4237	ANGLE ASSEM.	1
	16	1F748	NUT	2
	17	5J7173	WASHER	1
	18	7B3235	BOLT	3
C	19	3B4508	LOCKWASHER	7
	20	7S4775	PLATE ASSEM.	1
C	21	1M1427	BOSS	4
	22	7S4739	PLATE	1
	23	5S6633	WRAPPER	1
	24	5J8891	PAD	1
	25	9S3323	WASHER------(.125" Thick)	4
	26	5B9603	BOLT	1
C	27	2P51	BRACKET ASSEM.	1
C	28	2B947	BOLT	2
	29	S1590	BOLT	1
	30	1A2029	BOLT	2
C	31	4B4280	WASHER-------(.0937" Thick)	2
	32	9S3539	GRAB IRON	1
C	33	1D4719	NUT	2
	34	5J7432	COVER ASSEM. ----(L.H. Fender)	1
		9B1006	WASHER	1
	35	1A1460	BOLT	2
C	36	2P52	BRACKET ASSEM.	1
	37	5S4812	COVER	1
	38	S1588	BOLT	1
	39	7S4737	PLATE ASSEM.	1
	40	2H8382	LUG	3
	41	3D7229	STRIP	1
	42	8M6254	BLOCK	1

113827

ONLY "CATERPILLAR" PARTS GIVE "CATERPILLAR" PERFORMANCE

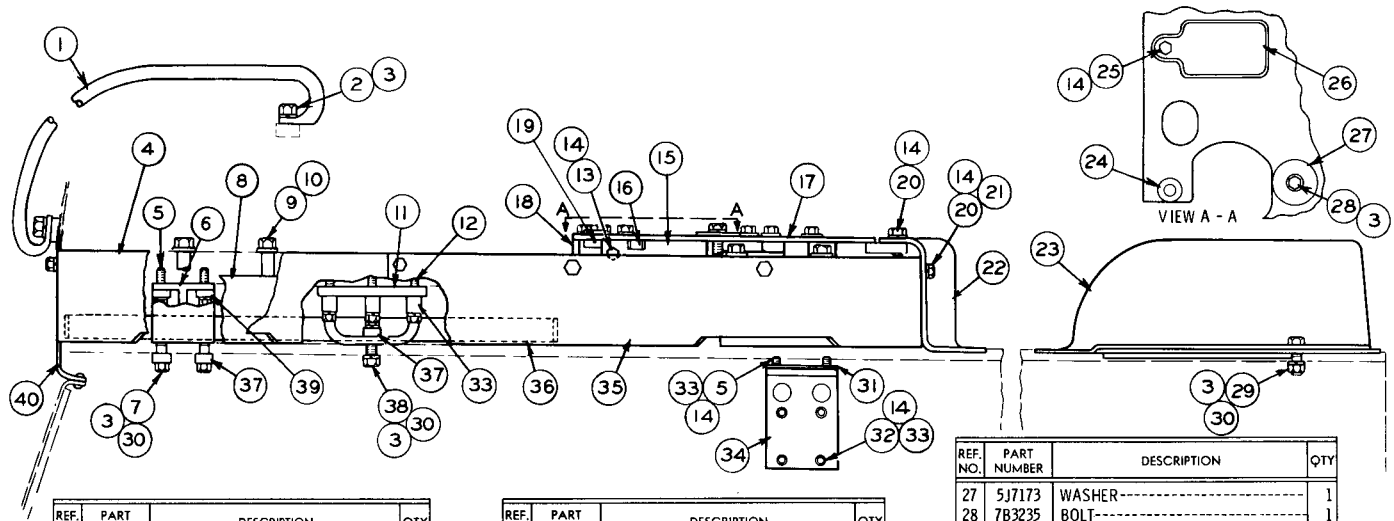

REF. NO.	PART NUMBER	DESCRIPTION	QTY
1	5S5699	GRAB IRON------(Right Hand)----	1
2	S1621	BOLT----------	2
3	3B4508	LOCKWASHER----------	8
4	5S8628	WRAPPER----------	1
5	S1590	BOLT----------	4
6	6J1008	BRACKET----------	1
7	1A1460	BOLT----------	2
8	5S6634	BLOCK----------	2
9	1A8651	BOLT----------	4
10	2S5658	WASHER----------	4
11	5J3622	BRACKET ASSEM.----------	1
12	L2070	BOLT----------	6
13	S1594	BOLT----------	2
14	3B4506	LOCKWASHER----------	20

REF. NO.	PART NUMBER	DESCRIPTION	QTY
15	5J4237	ANGLE ASSEM.----------	1
16	1F748	NUT----------	2
		(Part of 5J4237 Angle Assem.)	
17	7S4751	PLATE ASSEM.----------	1
18	3D7229	STRIP----------	1
19	8M6254	BLOCK----------	1
		(Parts of 7S4751 Plate Assem.)	
20	L1351	BOLT----------	11
21	4B4278	WASHER----------	7
22	7S4746	PLATE----------	1
23	5J5135	COVER----------	1
24	7F502	WASHER----------	1
25	S509	BOLT----------	1
26	7S4775	PLATE ASSEM.----------	1

REF. NO.	PART NUMBER	DESCRIPTION	QTY
27	5J7173	WASHER----------	1
28	7B3235	BOLT----------	1
29	S1585	BOLT----------	1
30	1D4719	NUT----------	5
31	5J7100	SHIM----------	4
32	1C2251	BOLT----------	4
33	8B8563	SPACER----------	12
34	5J4337	BRACKET ASSEM.----------	1
35	5S6633	WRAPPER----------	1
36	5J7102	COVER ASSEM.------(Left Hand)----	1
		(Mounted on Left Hand Fender)	
37	1M1427	BOSS----------	4
38	2B947	BOLT----------	2
	4B4280	WASHER----------	2
39	5H3124	SPACER----------	2
40	5S4813	COVER--------(Right Hand)--------	1
	3S7234	FILM----(193 Hydraulic Control)---	1

124002

7S4768 MOUNTING GROUP—As Viewed from Right Hand Side of Tractor—Type 1

7S4768 MOUNTING GROUP—As Viewed from Right Hand Side of Tractor—Type 2

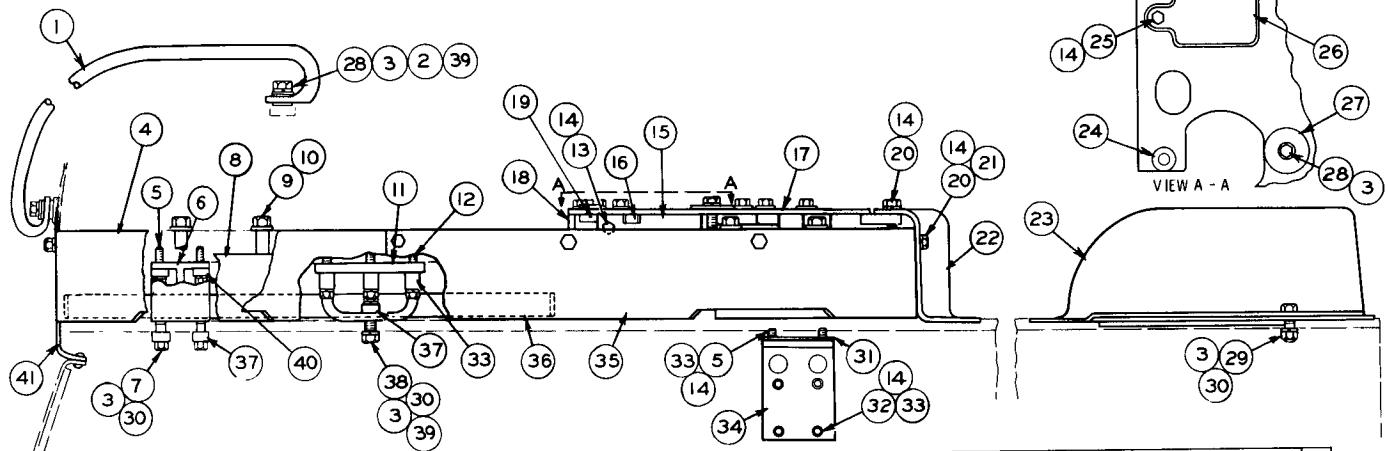

REF. NO.	PART NUMBER	DESCRIPTION	QTY
1	9S3539	GRAB IRON------(Right Hand)----	1
2	9S3323	WASHER------(Plastic)----------	4
3	3B4508	LOCKWASHER----------	8
4	5S8628	WRAPPER----------	1
5	S1590	BOLT----------	4
6	6J1008	BRACKET----------	1
7	1A1460	BOLT----------	2
8	5S6634	BLOCK----------	2
9	1A8651	BOLT----------	4
10	2S5658	WASHER----------	4
11	5J3622	BRACKET ASSEM.----------	1
12	L2070	BOLT----------	6
13	S1594	BOLT----------	2
14	3B4506	LOCKWASHER----------	20

15	5J4237	ANGLE ASSEM.----------	1
16	1F748	NUT----------	2
		(Part of 5J4237 Angle Assem.)	
17	7S4751	PLATE ASSEM.----------	1
18	3D7229	STRIP----------	1
19	8M6254	BLOCK----------	1
		(Parts of 7S4751 Plate Assem.)	
20	L1351	BOLT----------	11
21	4B4278	WASHER----------	7
22	7S4746	PLATE----------	1
23	5J5135	COVER----------	1
24	7F502	WASHER----------	1
25	S509	BOLT----------	1
26	7S4775	PLATE ASSEM.----------	1

27	5J7173	WASHER----------	1
28	7B3235	BOLT----------	3
29	S1585	BOLT----------	1
30	1D4719	NUT----------	5
31	5J7100	SHIM----------	4
32	1C2251	BOLT----------	4
33	8B8563	SPACER----------	12
34	5J4337	BRACKET ASSEM.----------	1
35	5S6633	WRAPPER----------	1
36	5J7102	COVER ASSEM.-----(Left Hand)----	1
		(Mounted on Left Hand Fender)	
37	1M1427	BOSS----------	4
38	2B947	BOLT----------	2
39	4B4280	WASHER--------(Steel)----------	4
40	5H3124	SPACER----------	2
41	5S4813	COVER--------(Right Hand)--------	1
	3S7234	FILM----(193 Hydraulic Control)---	1

ONLY "CATERPILLAR" PARTS GIVE "CATERPILLAR" PERFORMANCE

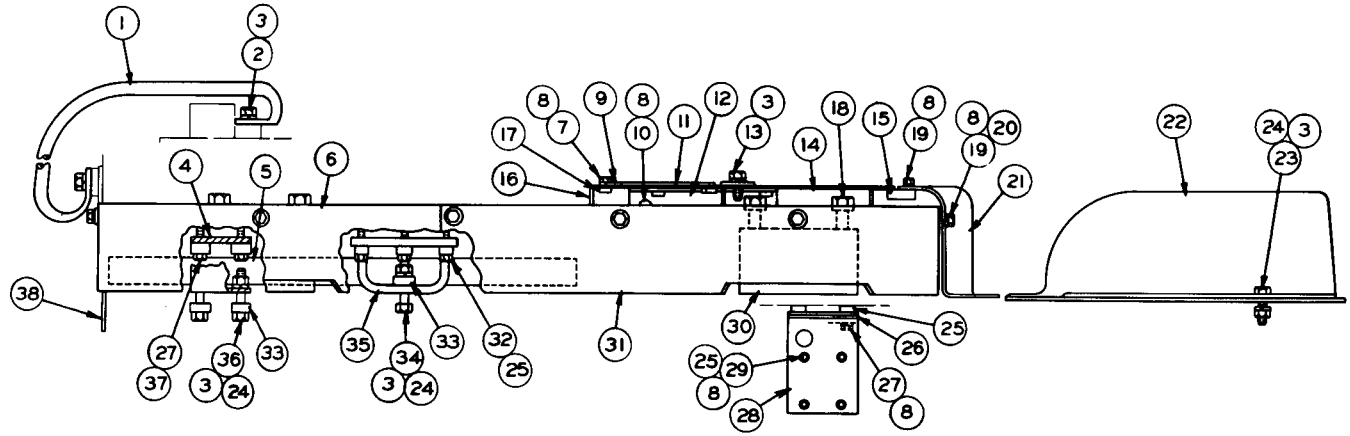

REF. NO.	PART NUMBER	DESCRIPTION	QTY
1	5S5699	GRAB IRON------(right hand)----	1
2	S1621	BOLT----------	2
3	3B4508	LOCKWASHER----------	8
4	6J1008	BRACKET----------	1
5	5J7102	COVER ASSEM.--(left hand fender)-	1
6	5S8628	WRAPPER----------	1
7	S509	BOLT----------	1
8	3B4506	LOCKWASHER----------	20
9	7F502	WASHER----------	1
10	S1594	BOLT----------	2
11	7S4775	PLATE ASSEM. ----------	1
12	5J4237	ANGLE ASSEM. ----------	1
	1F748	NUT----------	2
		(Part of 5J4237 Angle Assem.)	
13	7B3235	BOLT----------	1
	5J7173	WASHER----------	1

REF. NO.	PART NUMBER	DESCRIPTION	QTY
14	8S5296	PLATE ASSEM. ----------	1
	9F2978	NUT----------	1
15	2H8382	LUG----------	4
16	3D7229	STRIP----------	1
17	8M6254	BLOCK----------	1
		(Parts of 8S5296 Plate Assem.)	
18	1A8651	BOLT----------	4
	2S5658	WASHER----------	4
19	L1351	BOLT----------	11
20	4B4278	WASHER----------	7
21	7S4746	PLATE----------	1
22	5J5135	COVER----------	1
23	S1585	BOLT----------	1
24	1D4719	NUT----------	5
25	8B8563	SPACER----------	12

REF. NO.	PART NUMBER	DESCRIPTION	QTY
26	5J7100	SHIM----------	4
27	S1590	BOLT----------	4
28	5J4337	BRACKET ASSEM. ----------	1
29	1C2251	BOLT----------	4
30	5S6634	BLOCK----------	2
31	5S6633	WRAPPER----------	1
32	L2070	BOLT----------	6
33	1M1427	BOSS----------	4
34	2B947	BOLT----------	2
	4B4280	WASHER----------	2
35	5J3622	BRACKET ASSEM. ----------	1
36	1A1460	BOLT----------	2
37	5H3124	SPACER----------	2
38	5S4813	COVER----------	1
	3S7234	FILM---(193B Hydraulic Control)---	1

124409

8S5297 MOUNTING GROUP—As Viewed from Right Hand Side of Tractor—Type 1

8S5297 MOUNTING GROUP—As Viewed from Right Hand Side of Tractor—Type 2

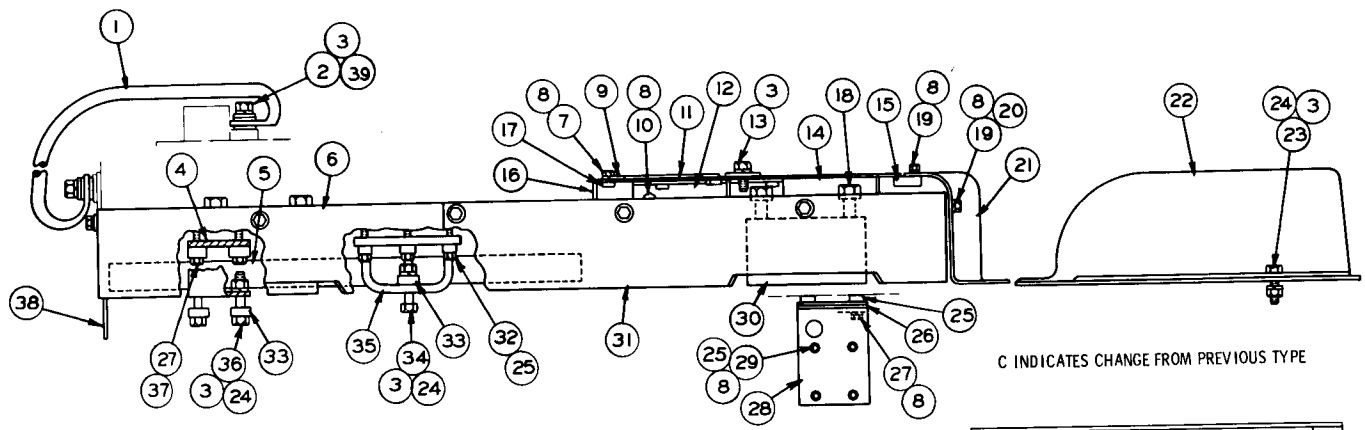

C INDICATES CHANGE FROM PREVIOUS TYPE

	REF. NO.	PART NUMBER	DESCRIPTION	QTY
C	1	9S3539	GRAB IRON------(right hand)----	1
C	2	7B3235	BOLT----------	2
	3	3B4508	LOCKWASHER----------	8
	4	6J1008	BRACKET----------	1
	5	5J7102	COVER ASSEM.--(left hand fender)-	1
	6	5S8628	WRAPPER----------	1
	7	S509	BOLT----------	1
	8	3B4506	LOCKWASHER----------	20
	9	7F502	WASHER----------	1
	10	S1594	BOLT----------	2
	11	7S4775	PLATE ASSEM. ----------	1
	12	5J4237	ANGLE ASSEM. ----------	1
		1F748	NUT----------	2
			(Part of 5J4237 Angle Assem.)	
	13	7B3235	BOLT----------	1
		5J7173	WASHER----------	1

REF. NO.	PART NUMBER	DESCRIPTION	QTY
14	8S5296	PLATE ASSEM. ----------	1
	9F2978	NUT----------	1
15	2H8382	LUG----------	4
16	3D7229	STRIP----------	1
17	8M6254	BLOCK----------	1
		(Parts of 8S5296 Plate Assem.)	
18	1A8651	BOLT----------	4
	2S5658	WASHER----------	4
19	L1351	BOLT----------	11
20	4B4278	WASHER----------	7
21	7S4746	PLATE----------	1
22	5J5135	COVER----------	1
23	S1585	BOLT----------	1
24	1D4719	NUT----------	5
25	8B8563	SPACER----------	12

	REF. NO.	PART NUMBER	DESCRIPTION	QTY
	26	5J7100	SHIM----------	4
	27	S1590	BOLT----------	4
	28	5J4337	BRACKET ASSEM. ----------	1
	29	1C2251	BOLT----------	4
	30	5S6634	BLOCK----------	2
	31	5S6633	WRAPPER----------	1
	32	L2070	BOLT----------	6
	33	1M1427	BOSS----------	4
	34	2B947	BOLT----------	2
		4B4280	WASHER----------	2
	35	5J3622	BRACKET ASSEM. ----------	1
	36	1A1460	BOLT----------	2
	37	5H3124	SPACER----------	2
	38	5S4813	COVER----------	1
C	39	4B4280	WASHER----------(Steel)---------	2
		9S3323	WASHER---------(Plastic)---------	4
		3S7234	FILM----------(193B)----------	1

105824

ONLY "CATERPILLAR" PARTS GIVE "CATERPILLAR" PERFORMANCE

ALWAYS GIVE SERIAL NUMBER WHEN ORDERING PARTS

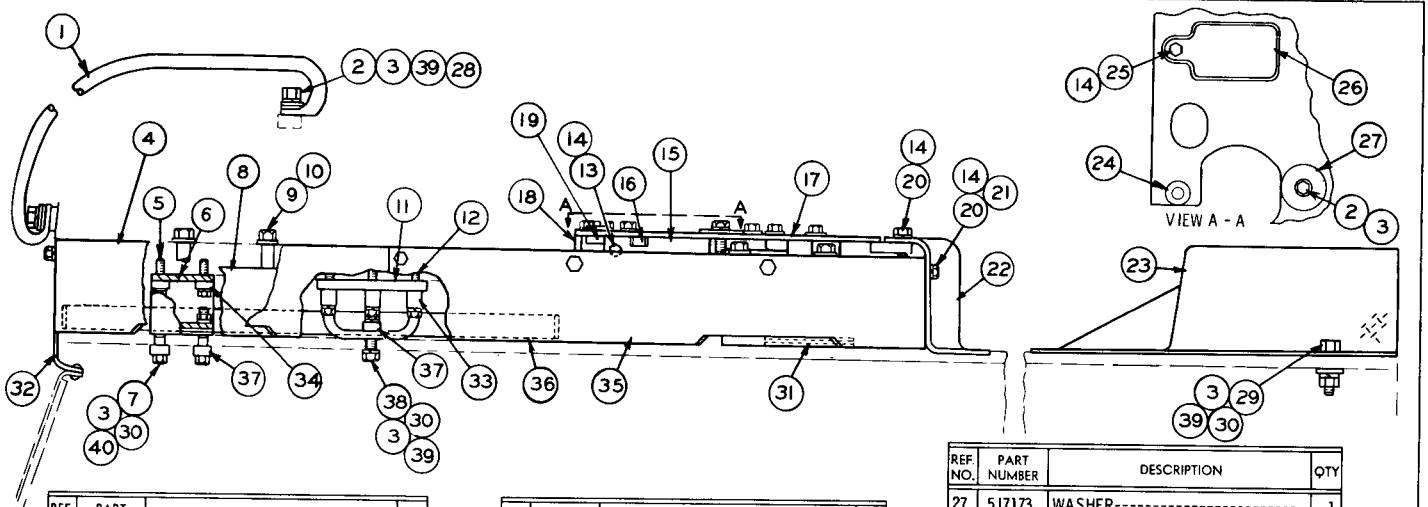

REF. NO.	PART NUMBER	DESCRIPTION	QTY
1	9S3539	GRAB IRON------(Right Hand)----	1
2	7B3235	BOLT----------	3
3	3B4508	LOCKWASHER----------	7
4	5S8628	WRAPPER----------	1
5	S1590	BOLT----------	2
6	9S7274	BRACKET----------	1
7	1A1460	BOLT----------	2
8	5S6634	BLOCK----------	2
9	1A8651	BOLT----------	4
10	2S5658	WASHER----------	4
11	5J3622	BRACKET ASSEM. ----------	1
12	L2070	BOLT----------	6
13	S1594	BOLT----------	2
14	3B4506	LOCKWASHER----------	14

REF. NO.	PART NUMBER	DESCRIPTION	QTY
15	5J4237	ANGLE ASSEM. ----------	1
16	1F748	NUT----------	2
		(Part of 5J4237 Angle Assem.)	
17	7S4751	PLATE ASSEM. ----------	1
18	3D7229	STRIP----------	1
19	8M6254	BLOCK----------	1
		(Parts of 7S4751 Plate Assem.)	
20	L1351	BOLT----------	11
21	4B4278	WASHER----------	7
22	7S4746	PLATE----------	1
23	9S6825	COVER ASSEM. ----------	1
24	7F502	WASHER----------	1
25	S509	BOLT----------	1
26	7S4775	PLATE ASSEM. ----------	1

REF. NO.	PART NUMBER	DESCRIPTION	QTY
27	5J7173	WASHER----------	1
28	9S3323	WASHER-----(Plastic)----------	4
29	S1585	BOLT----------	1
30	1D4719	NUT----------	5
31	1P1632	SHIM----------	6
32	5S4813	COVER-------(Right Hand)--------	1
33	8B8563	SPACER----------	6
34	5H3124	SPACER----------	2
35	5S6633	WRAPPER----------	1
36	5J7102	COVER ASSEM. ----(Left Hand)-----	1
		(Mounted on Left Hand Fender)	
37	1M1427	BOSS----------	4
38	2B947	BOLT----------	2
39	4B4280	WASHER-------(Steel)----------	5
40	1K475	SHIM----------	6
	3S7234	FILM---(193B Hydraulic Control)---	1

128278

9S7422 MOUNTING GROUP—Type 1

9S7422 MOUNTING GROUP—Type 2

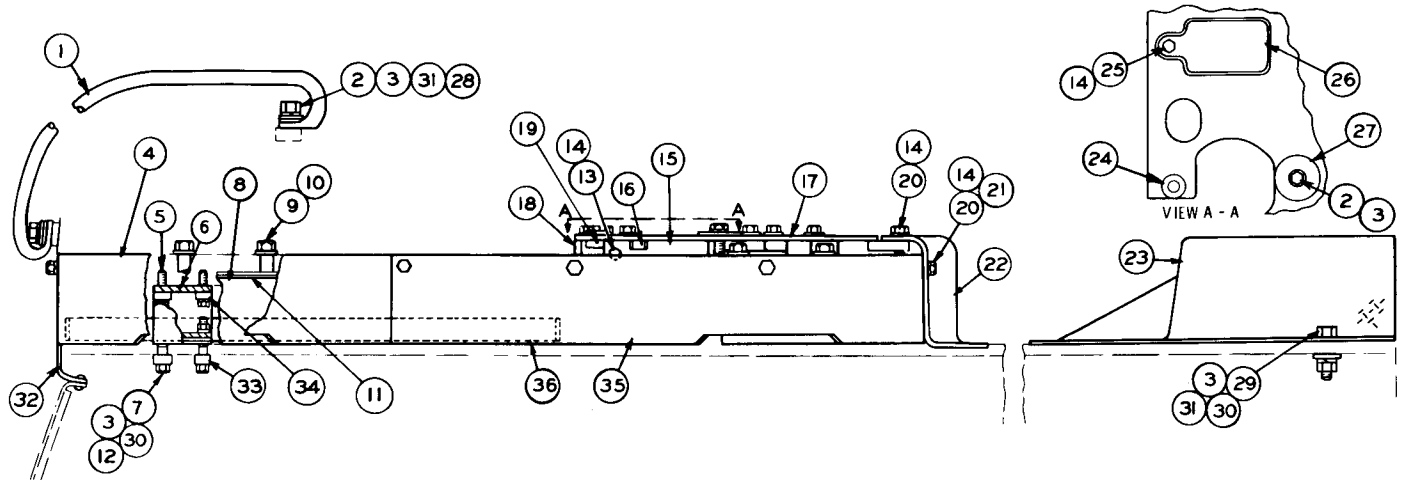

	REF. NO.	PART NUMBER	DESCRIPTION	QTY
	1	9S3539	GRAB IRON-------(R. H.)---------	1
	2	7B3235	BOLT----------	3
C	3	3B4508	LOCKWASHER----------	5
	4	5S8628	WRAPPER----------	1
	5	S1590	BOLT----------	2
	6	9S7274	BRACKET----------	1
	7	1A1460	BOLT----------	2
	8	5S6634	BLOCK----------	2
	9	1A8651	BOLT----------	4
	10	2S5658	WASHER----------	4
C	11	1P5904	SHIM----------	8
C	12	1K475	SHIM----------	1
	13	S1594	BOLT----------	2
	14	3B4506	LOCKWASHER----------	14

15	5J4237	ANGLE ASSEM. ----------	1
16	1F748	NUT----------	2
17	7S4751	PLATE ASSEM. ----------	1
18	3D7229	STRIP----------	1
19	8M6254	BLOCK----------	1
20	L1351	BOLT----------	11
21	4B4278	WASHER----------	7
22	7S4746	PLATE----------	1
23	9S6825	COVER ASSEM. ----------	1
24	7F502	WASHER----------	1
25	S509	BOLT----------	1
26	7S4775	PLATE ASSEM. ----------	1
27	5J7173	WASHER----------	1
28	9S3323	WASHER-------(Plastic)----------	4
29	S1585	BOLT----------	1
C 30	1D4719	NUT----------	2

C 31	4B4280	WASHER---------(Steel)----------	3
32	5S4813	COVER---------(R. H.)----------	1
C 33	1M1427	BOSS----------	2
34	5H3124	SPACER----------	2
35	5S6633	WRAPPER----------	1
36	5J7102	COVER ASSEM. ------(L. H.)------	1
		(Mounted on Left Hand Fender)	
	3S7234	FILM---(193B Hydraulic Control)----	1

C INDICATES CHANGE

140966

ONLY "CATERPILLAR" PARTS GIVE "CATERPILLAR" PERFORMANCE

9S7248 MOUNTING GROUP—Type 1

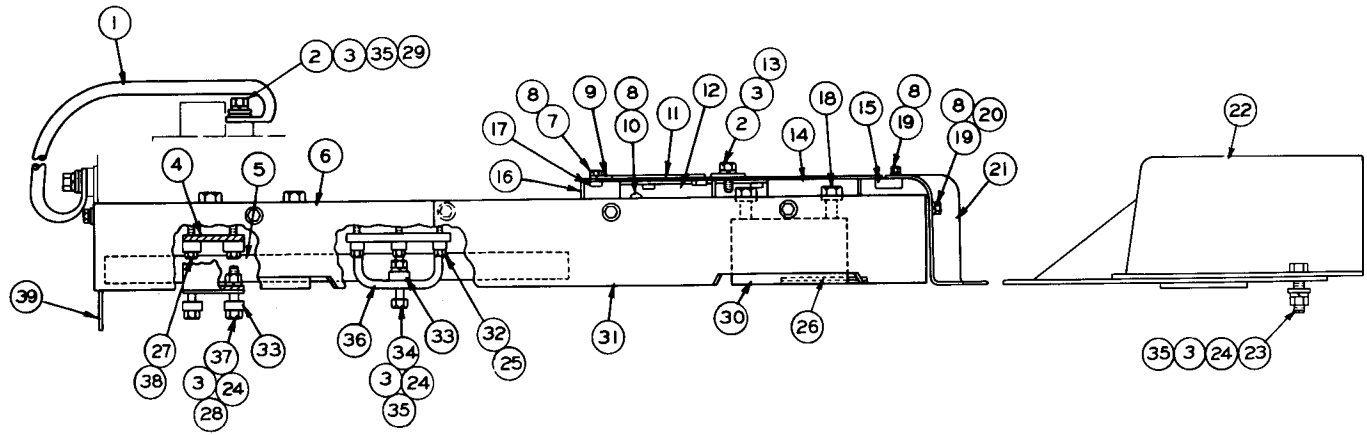

REF. NO.	PART NUMBER	DESCRIPTION	QTY
1	9S3539	GRAB IRON------(right hand)-----	1
2	7B3235	BOLT----------	3
3	3B4508	LOCKWASHER----------	7
4	9S7274	BRACKET----------	1
5	5J7102	COVER ASSEM.--(left hand fender)-	1
6	5S8628	WRAPPER----------	1
7	S509	BOLT----------	1
8	3B4506	LOCKWASHER----------	14
9	7F502	WASHER----------	1
10	S1594	BOLT----------	2
11	7S4775	PLATE ASSEM. ----------	1
12	5J4237	ANGLE ASSEM. ----------	1
	1F748	NUT----------	2
		(Part of 5J4237 Assem.)	
13	5J7173	WASHER----------	1

REF. NO.	PART NUMBER	DESCRIPTION	QTY
14	8S5296	PLATE ASSEM. ----------	1
	9F2978	NUT----------	1
15	2H8382	LUG----------	4
16	3D7229	STRIP----------	1
17	8M6254	BLOCK----------	1
		(Parts of 8S5296 Plate Assem.)	
18	1A8651	BOLT----------	4
	2S5658	WASHER----------	4
19	L1351	BOLT----------	11
20	4B4278	WASHER----------	7
21	7S4746	PLATE----------	1
22	9S6825	COVER ASSEM. ----------	1
23	S1585	BOLT----------	1
24	1D4719	NUT----------	5
25	8B8563	SPACER----------	6

REF. NO.	PART NUMBER	DESCRIPTION	QTY
26	1P1632	SHIM----------	6
27	S1590	BOLT----------	2
28	1K475	SHIM----------	6
29	9S3323	WASHER------(Plastic)----------	4
30	5S6634	BLOCK----------	2
31	5S6633	WRAPPER----------	1
32	L2070	BOLT----------	6
33	1M1427	BOSS----------	4
34	2B947	BOLT----------	2
35	4B4280	WASHER-------(Steel)----------	5
36	5J3622	BRACKET ASSEM. ----------	1
37	1A1460	BOLT----------	2
38	5H3124	SPACER----------	2
39	5S4813	COVER----------	1
	3S7234	FILM---(193B Hydraulic Control)---	1

128298

ONLY "CATERPILLAR" PARTS GIVE "CATERPILLAR" PERFORMANCE

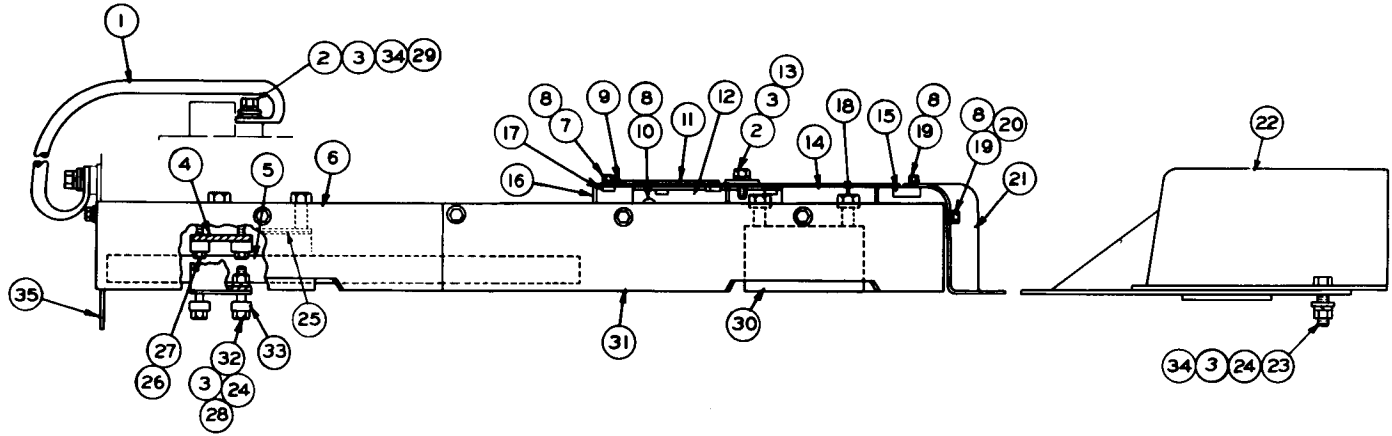

REF. NO.	PART NUMBER	DESCRIPTION	QTY
1	9S3539	GRAB IRON--------(R.H.)--------	1
2	7B3235	BOLT----------	3
C 3	3B4508	LOCKWASHER----------	5
4	9S7274	BRACKET----------	1
5	5J7102	COVER ASSEM. --(L.H. Fender)----	1
6	5S8628	WRAPPER----------	1
7	S509	BOLT----------	1
8	3B4506	LOCKWASHER----------	14
9	7F502	WASHER----------	1
10	S1594	BOLT----------	2
11	7S4775	PLATE ASSEM. ----------	1
12	5J4237	ANGLE ASSEM. ----------	1
	1F748	NUT----------	2
13	5J7173	WASHER----------	1
14	8S5296	PLATE ASSEM. ----------	1
	9F2978	NUT----------	1
15	2H8382	LUG----------	4
16	3D7229	STRIP----------	1
17	8M6254	BLOCK----------	1
18	1A8651	BOLT----------	4
	2S5658	WASHER----------	4
19	L1351	BOLT----------	11
20	4B4278	WASHER----------	4
21	7S4746	PLATE----------	1
22	9S6825	COVER ASSEM. ----------	1
23	S1585	BOLT----------	1
C 24	1D4719	NUT----------	3
C 25	1P5904	SHIM----------	8
26	5H3124	SPACER----------	2
27	S1590	BOLT----------	2
C 28	1K475	SHIM- ----------	1
29	9S3323	WASHER--------(Plastic)--------	4
30	5S6634	BLOCK----------	2
31	5S6633	WRAPPER----------	1
32	1A1460	BOLT----------	2
C 33	1M1427	BOSS----------	2
34	4B4280	WASHER---------(Steel)--------	3
35	5S4813	COVER----------	1
	3S7234	FILM---(193B Hydraulic Control)---	1

C INDICATES CHANGE 140967

9S7248 MOUNTING GROUP—Type 2

2P4109 MOUNTING GROUP

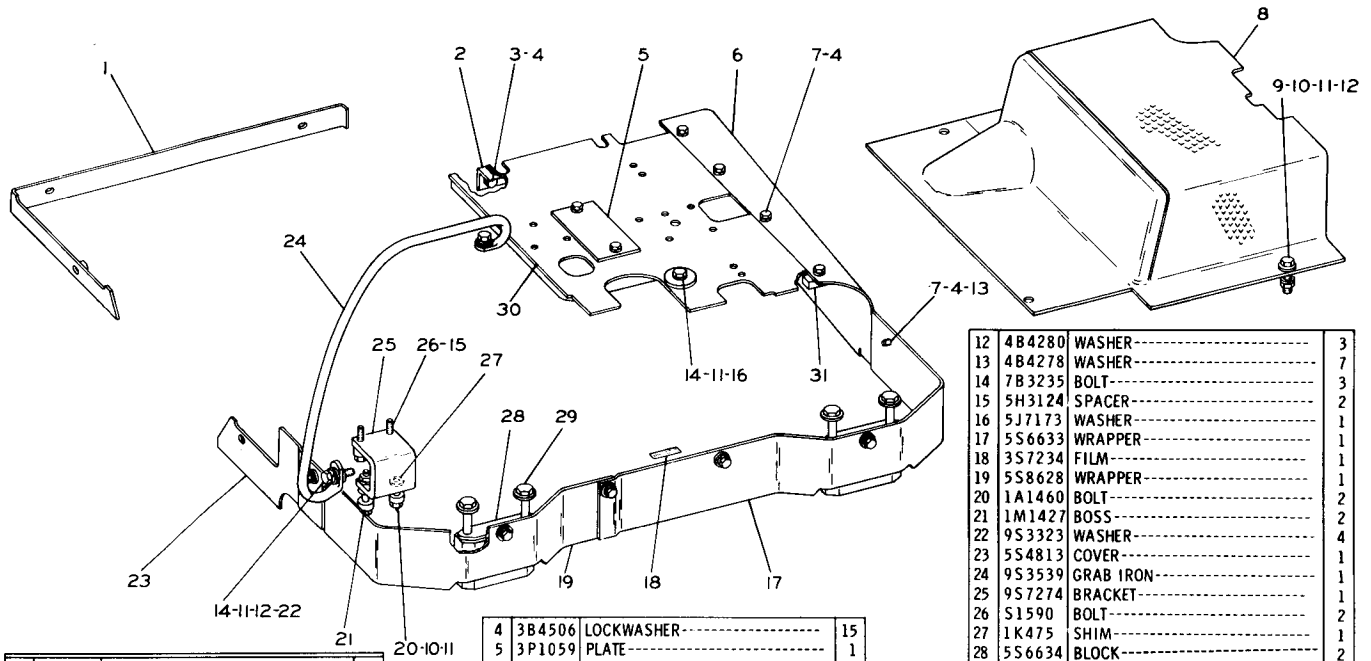

REF. NO.	PART NUMBER	DESCRIPTION	QTY
1	5J7102	COVER ASSEM.-----(L. H.)--------	1
2	5J4237	ANGLE ASSEM. ----------	1
	1F748	NUT----------	2
3	S1594	BOLT----------	2
4	3B4506	LOCKWASHER----------	15
5	3P1059	PLATE----------	1
6	7S4746	PLATE----------	1
7	L1351	BOLT----------	13
8	9S6825	COVER ASSEM. ----------	1
9	S1585	BOLT----------	1
10	1D4719	NUT----------	3
11	3B4508	LOCKWASHER----------	6
12	4B4280	WASHER----------	3
13	4B4278	WASHER----------	7
14	7B3235	BOLT----------	3
15	5H3124	SPACER----------	2
16	5J7173	WASHER----------	1
17	5S6633	WRAPPER----------	1
18	3S7234	FILM----------	1
19	5S8628	WRAPPER----------	1
20	1A1460	BOLT----------	2
21	1M1427	BOSS----------	2
22	9S3323	WASHER----------	4
23	5S4813	COVER----------	1
24	9S3539	GRAB IRON----------	1
25	9S7274	BRACKET----------	1
26	S1590	BOLT----------	2
27	1K475	SHIM----------	1
28	5S6634	BLOCK----------	2
29	1A8651	BOLT----------	4
	2S5658	WASHER----------	4
	1P5904	SHIM----------	8
30	1P5336	PLATE ASSEM. ----------	1
C	9F2978	NUT--------(Weld)----------	2
31	2H8382	LUG----------	4

C INDICATES CHANGE

203902

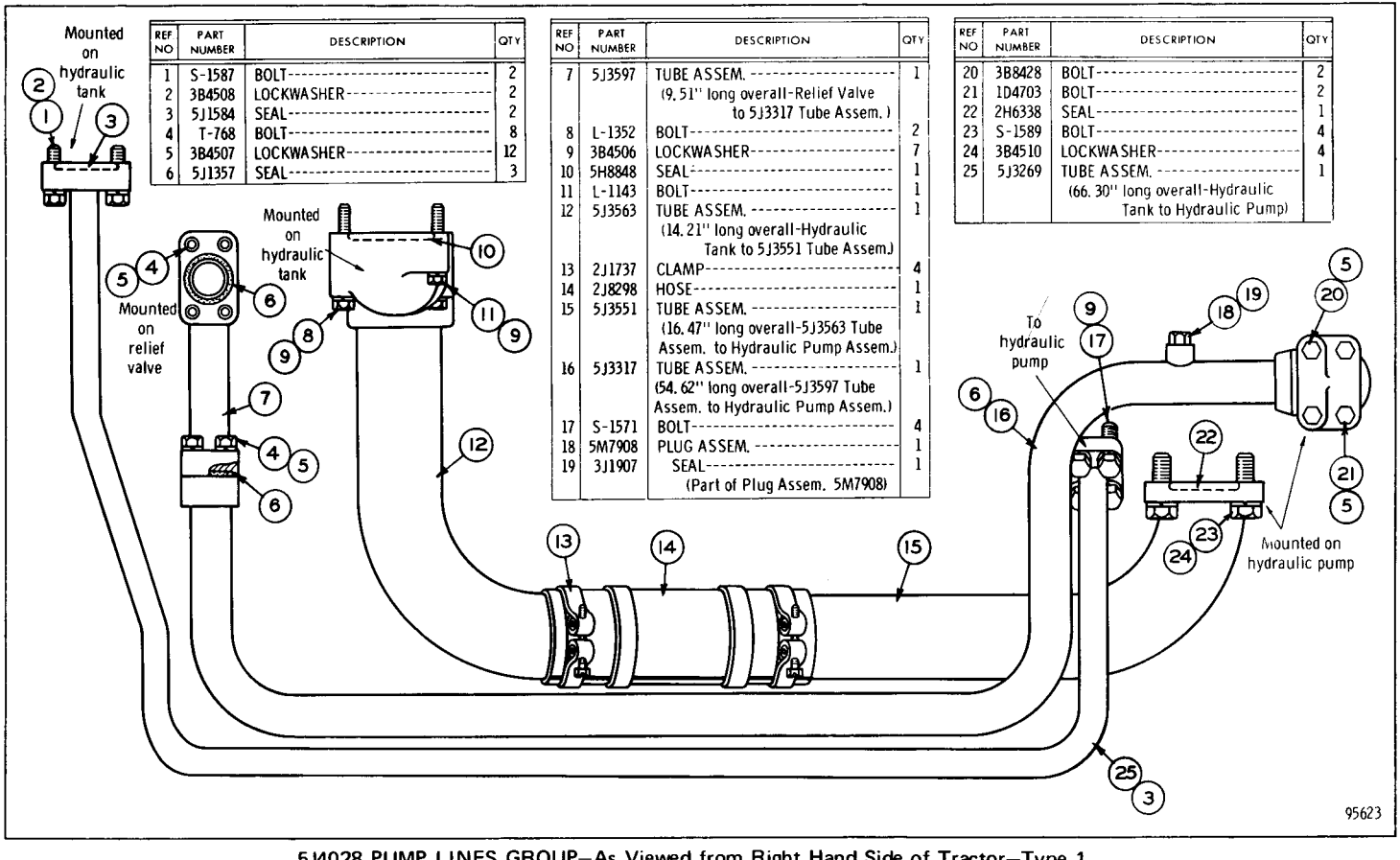

REF NO	PART NUMBER	DESCRIPTION	QTY
1	S-1587	BOLT	2
2	3B4508	LOCKWASHER	2
3	5J1584	SEAL	2
4	T-768	BOLT	8
5	3B4507	LOCKWASHER	12
6	5J1357	SEAL	3
7	5J3597	TUBE ASSEM. (9.51" long overall-Relief Valve to 5J3317 Tube Assem.)	1
8	L-1352	BOLT	2
9	3B4506	LOCKWASHER	7
10	5H8848	SEAL	1
11	L-1143	BOLT	1
12	5J3563	TUBE ASSEM. (14.21" long overall-Hydraulic Tank to 5J3551 Tube Assem.)	1
13	2J1737	CLAMP	4
14	2J8298	HOSE	1
15	5J3551	TUBE ASSEM. (16.47" long overall-5J3563 Tube Assem. to Hydraulic Pump Assem.)	1
16	5J3317	TUBE ASSEM. (54.62" long overall-5J3597 Tube Assem. to Hydraulic Pump Assem.)	1
17	S-1571	BOLT	4
18	5M7908	PLUG ASSEM.	1
19	3J1907	SEAL (Part of Plug Assem. 5M7908)	1
20	3B8428	BOLT	2
21	1D4703	BOLT	2
22	2H6338	SEAL	1
23	S-1589	BOLT	4
24	3B4510	LOCKWASHER	4
25	5J3269	TUBE ASSEM. (66.30" long overall-Hydraulic Tank to Hydraulic Pump)	1

5J4028 PUMP LINES GROUP—As Viewed from Right Hand Side of Tractor—Type 1

5J4028 PUMP LINES GROUP—As Viewed from Right Hand Side of Tractor—Type 2

REF NO.	PART NUMBER	DESCRIPTION	QTY
1	S-1587	BOLT	2
2	3B4508	LOCKWASHER	2
3	5J1584	SEAL	2
4	T-768	BOLT	8
5	3B4507	LOCKWASHER	12
6	5J1357	SEAL	3

REF NO	PART NUMBER	DESCRIPTION	QTY
7	5J3597	TUBE ASSEM. (9.51" long overall-Relief Valve to 5J3317 Tube Assem.)	1
8	L-1352	BOLT	2
9	3B4506	LOCKWASHER	7
10	5H8848	SEAL	1
11	L-1143	BOLT	1
12	5J3563	TUBE ASSEM. (14.21" long overall-Hydraulic Tank to 5J3551 Tube Assem.)	1
13	2J1737	CLAMP	4
14	2J8298	HOSE	1
15	5J3551	TUBE ASSEM. (16.47" long overall-5J3563 Tube Assem. to Hydraulic Pump Assem.)	1
16	5J9859	TUBE ASSEM. (63.37" long overall-5J3597 Tube Assem. to Hydraulic Pump Assem.)	1
17	S-1571	BOLT	4
18	5M7908	PLUG ASSEM.	1
19	3J1907	SEAL (Part of Plug Assem. 5M7908)	1

REF NO	PART NUMBER	DESCRIPTION	QTY
20	3B8428	BOLT	2
21	1D4703	BOLT	2
22	2H6338	SEAL	1
23	S-1589	BOLT	4
24	3B4510	LOCKWASHER	4
25	5J9861	TUBE ASSEM. (73.86" long overall-Hydraulic Tank to Hydraulic Pump)	1

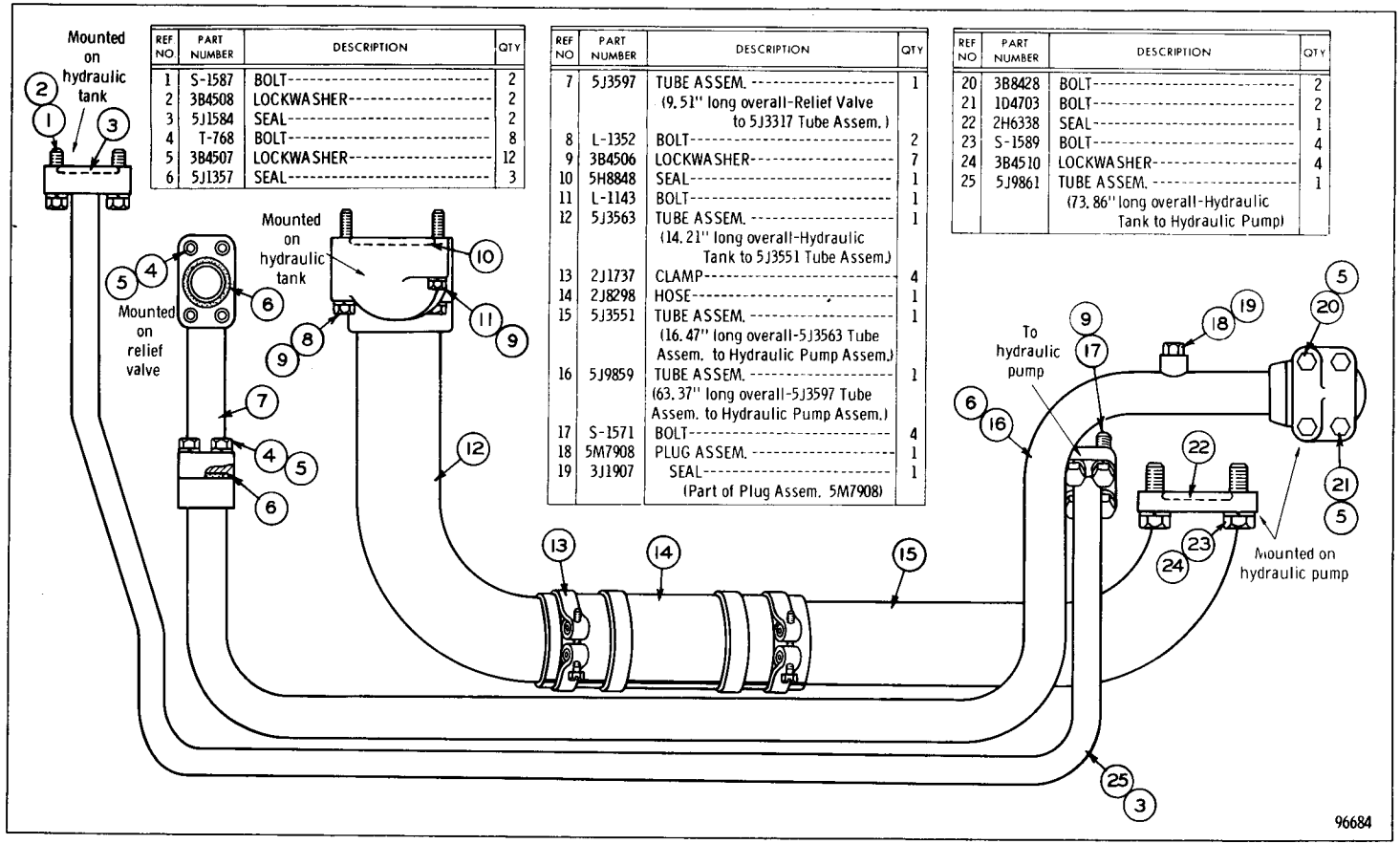

5J4028 PUMP LINES GROUP—As Viewed from Right Hand Side of Tractor—Type 3

REF NO	PART NUMBER	DESCRIPTION	QTY
1	S 1587	BOLT	2
2	3B4508	LOCKWASHER	2
3	5J1584	SEAL	2
4	T 768	BOLT	8
5	3B4507	LOCKWASHER	12
6	5J1357	SEAL	3

	REF. NO.	PART NUMBER	DESCRIPTION	QTY
	7	5J3597	TUBE ASSEM. -(9.51" long overall)-	1
	8	L1352	BOLT	2
C	9	3B4506	LOCKWASHER	13
	10	5H8848	SEAL	1
	11	L1143	BOLT	1
	12	5J3563	TUBE ASSEM. -(14.21" long overall)-	1
	13	4H1753	CLAMP	2
	14	2J8298	HOSE	1
	15	5J3551	TUBE ASSEM. -(16.47" long overall)-	1
	16	5J9859	TUBE ASSEM. -(63.37" long overall)-	1
	17	S1571	BOLT	4
	18	5M7908	PLUG ASSEM.	1
	19	3J1907	SEAL	1
			(Part of 5M7908 Assem.)	
	20	3B8428	BOLT	2
	21	1D4703	BOLT	2
	22	2H6338	SEAL	1
	23	S1589	BOLT	4
	24	3B4510	LOCKWASHER	4
	25	5J9861	TUBE ASSEM. -(73.86" long overall)-	1

	REF. NO.	PART NUMBER	DESCRIPTION	QTY
C	26	3B1915	BOLT	2
C	27	1D4717	NUT	2
C	28	4B5271	WASHER	5
C	29	2L2685	CLIP	1
C	30	3S4856	ANGLE	2
C	31	7S3916	ANGLE	1
C	32	7S3919	ANGLE	1
C	33	S1591	BOLT	2

C INDICATES CHANGE FROM PREVIOUS TYPE

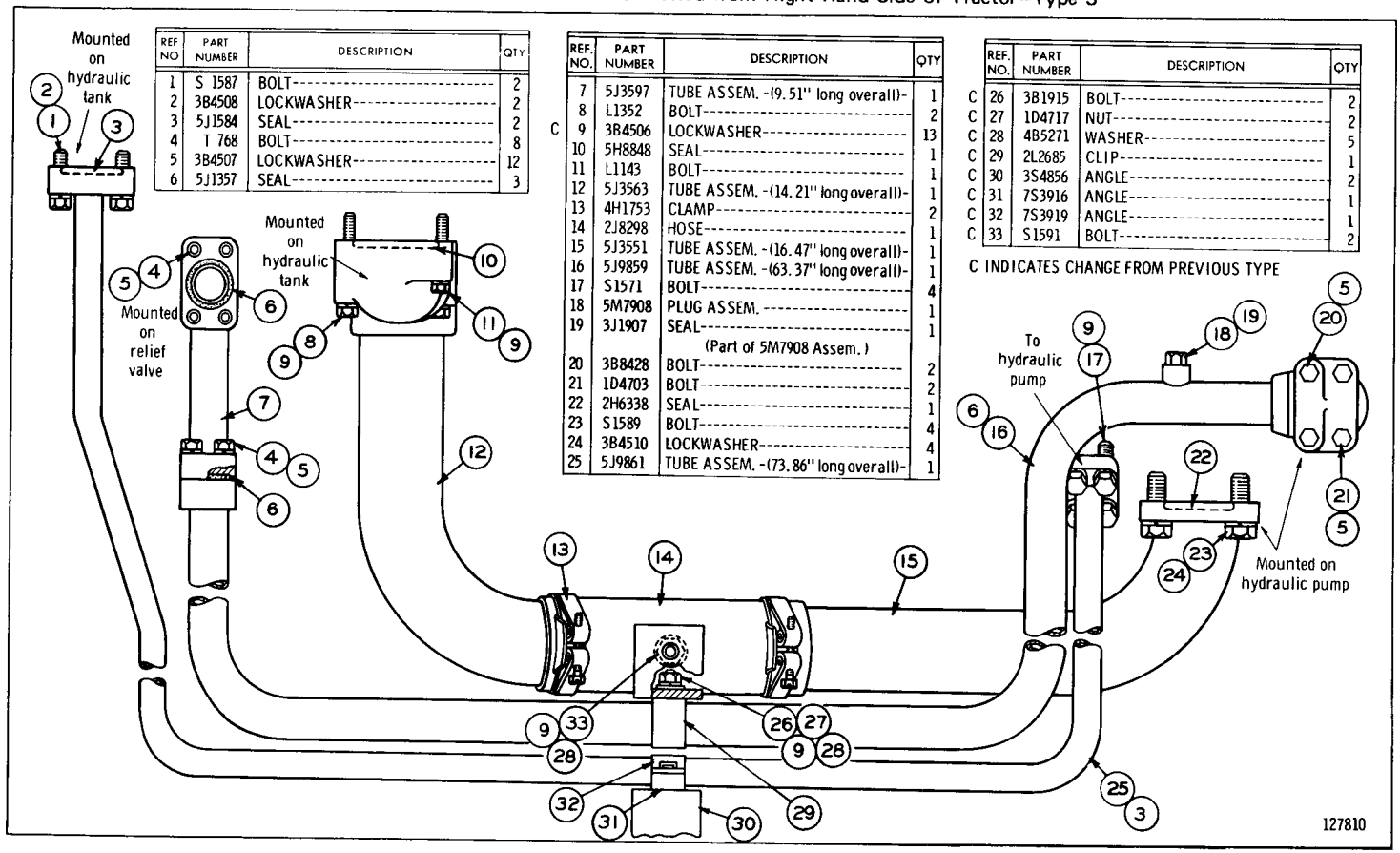

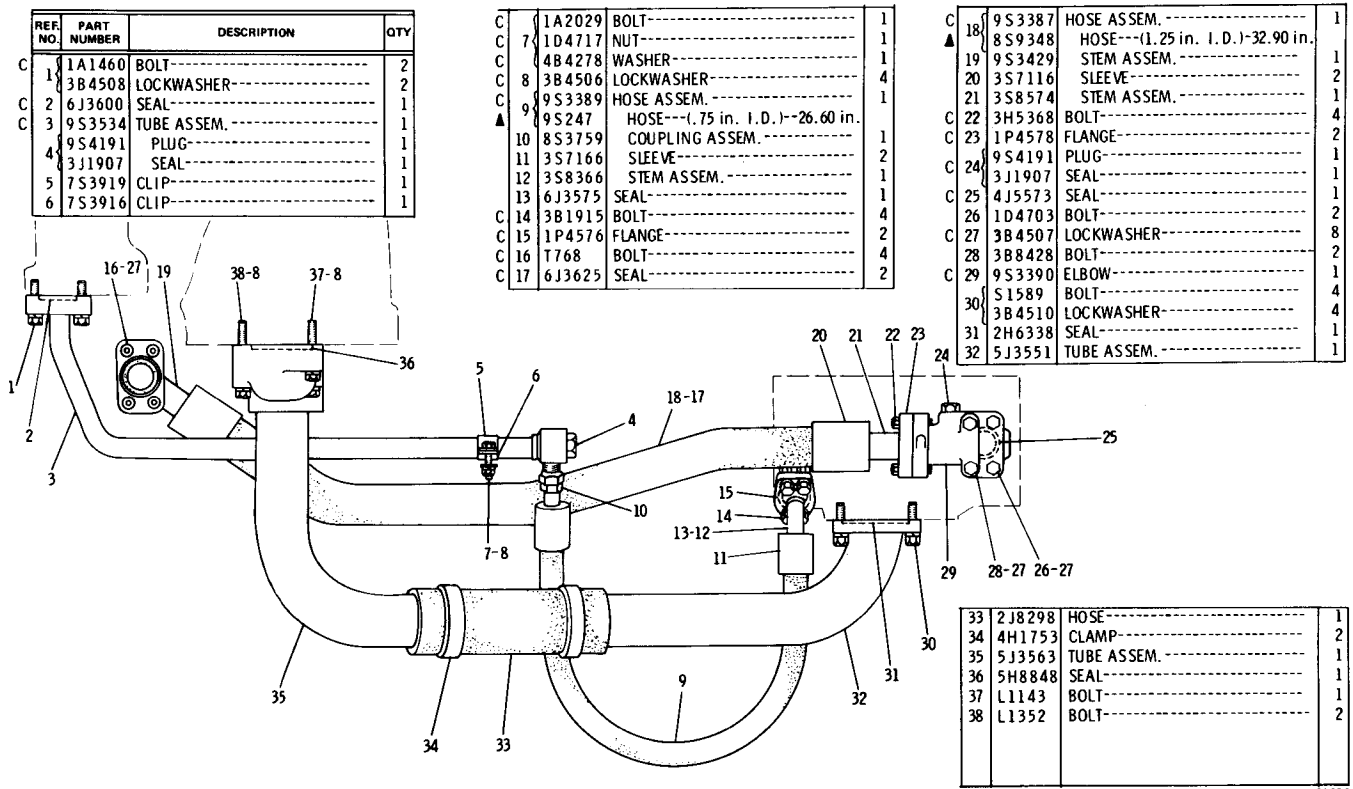

5J4028 PUMP LINES GROUP—As Viewed from Right Hand Side of Tractor—Type 4

5J4028 PUMP LINES GROUP—As Viewed from Right Hand Side of Tractor—Type 5

REF. NO.	PART NUMBER	DESCRIPTION	QTY
1	1A1460	BOLT	2
	3B4508	LOCKWASHER	2
2	6J3600	SEAL	1
3	9S3534	TUBE ASSEM.	1
4	9S4191	PLUG	1
	3J1907	SEAL	1
5	7S3919	CLIP	1
6	7S3916	CLIP	1
	1A2029	BOLT	1
7	1D4717	NUT	1
	4B4278	WASHER	1
8	3B4506	LOCKWASHER	4
C 9	3P2013	HOSE ASSEM.	1
▲	9S247	HOSE---(.75 in. I.D.)--26.60 in.	
10	8S3759	COUPLING ASSEM.	1
11	3S7166	SLEEVE	2
12	3S8360	STEM ASSEM.	1
C 13	4J5267	SEAL	1
14	3B1915	BOLT	4
15	1P4576	FLANGE	2
16	T768	BOLT	4
C 17	4J522	SEAL	2
C ▲ 18	2P9468	HOSE ASSEM.	1
	8S9348	HOSE--(1.25 in. I.D.)--- 32 in.	
19	2P9921	STEM ASSEM.	1
20	3S7116	SLEEVE	2
21	1P1219	STEM ASSEM.	1
22	3H5368	BOLT	4
23	1P4578	FLANGE	2
24	9S4191	PLUG	1
	3J1907	SEAL	1
25	4J5573	SEAL	1
26	1D4703	BOLT	2
27	3B4507	LOCKWASHER	8
28	3B8428	BOLT	2
29	9S3390	ELBOW	1
30	S1589	BOLT	4
	3B4510	LOCKWASHER	4
31	2H6338	SEAL	1
32	5J3551	TUBE ASSEM.	1
33	2J8298	HOSE	1
34	4H1753	CLAMP	2
35	5J3563	TUBE ASSEM.	1
36	5H8848	SEAL	1
37	L1143	BOLT	1
38	L1352	BOLT	2

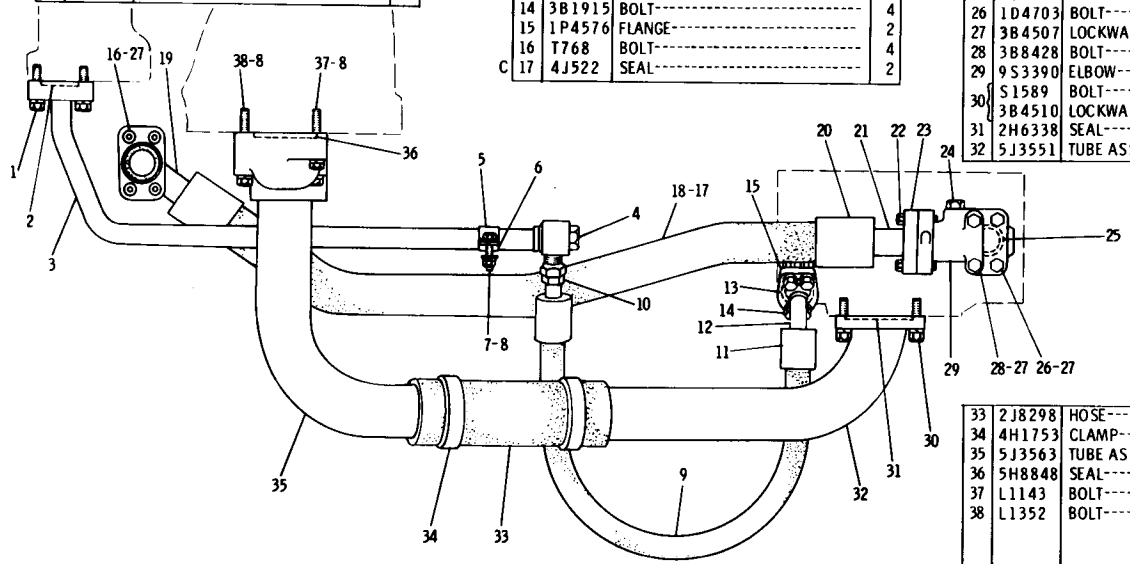

C INDICATES CHANGE

▲ ORDER BY THE INCH

143381

ONLY "CATERPILLAR" PARTS GIVE "CATERPILLAR" PERFORMANCE

REF NO.	PART NUMBER	DESCRIPTION	QTY.
1	5J4312	TUBE ASSEM.	1
2	3322-A	BOLT (2.50" Long)	1
3	3B4508	LOCKWASHER	2
4	7B3235	BOLT (1.375" Long) (Used without 5J5208 Adapter Group)	1
5	T-768	BOLT	4
6	3B4507	LOCKWASHER	4

REF NO.	PART NUMBER	DESCRIPTION	QTY.
7	5J1584	SEAL	1
8	5J1357	SEAL	1
9	5H8848	SEAL	1
10	L-1143	BOLT-(2.50" Long)	3
11	3B4506	LOCKWASHER	8
12	L-1352	BOLT-(3.25" Long)	1
13	5J4315	TUBE ASSEM.	1
14	9M6738	CLAMP	4
15	4K1209	HOSE	1
16	5J4297	TUBE ASSEM.	1
17	S-1571	BOLT	4
18	1H8128	SEAL	1
19	5J1358	SEAL	1

REF NO.	PART NUMBER	DESCRIPTION	QTY.
20	7B3235	BOLT-(1.375" Long)	2
21	L-1329	BOLT-(3" Long)	2
22	3B4508	LOCKWASHER	4
23	S-1589	BOLT	4
24	3B4510	LOCKWASHER	4
25	5J4340	TUBE ASSEM.	1
26	5J1356	SEAL	1

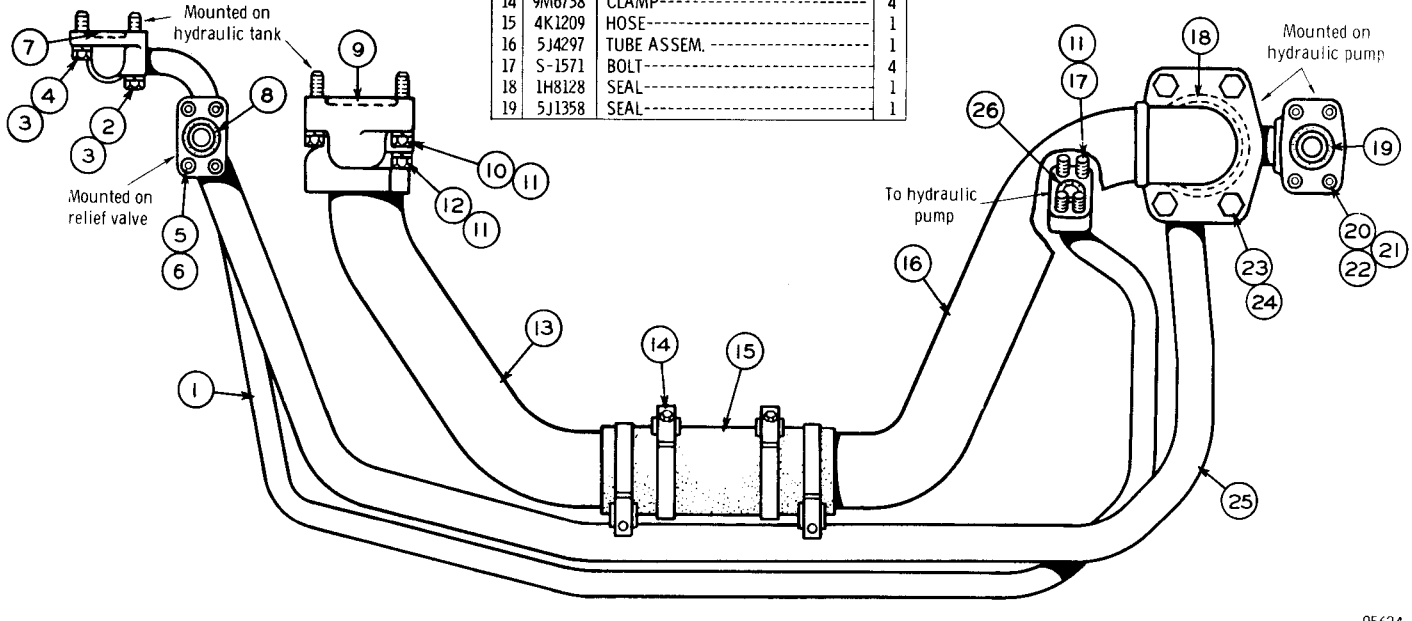

5J4359 PUMP LINES GROUP—As Viewed from Right Hand Side of Tractor—Type 1

5J4359 PUMP LINES GROUP—As Viewed from Right Hand Side of Tractor—Type 2

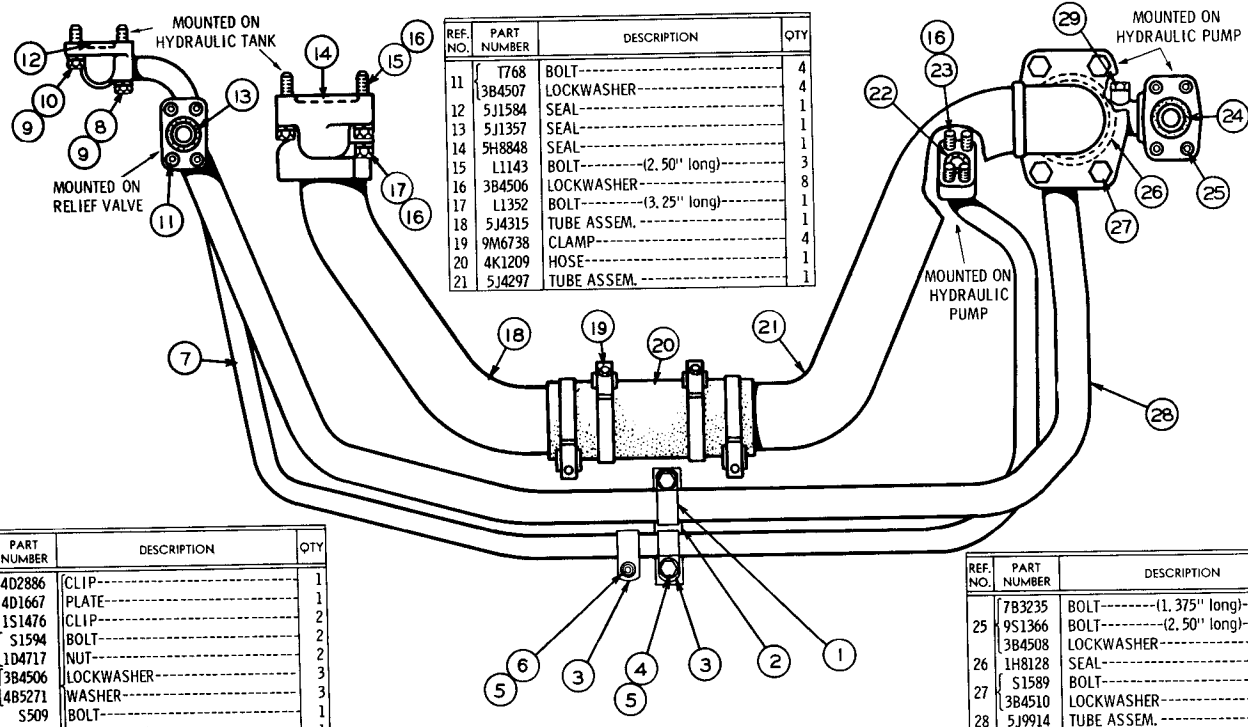

REF. NO.	PART NUMBER	DESCRIPTION	QTY
11	T768	BOLT	4
	3B4507	LOCKWASHER	4
12	5J1584	SEAL	1
13	5J1357	SEAL	1
14	5H8848	SEAL	1
15	L1143	BOLT—(2.50" long)	3
16	3B4506	LOCKWASHER	8
17	L1352	BOLT—(3.25" long)	1
18	5J4315	TUBE ASSEM.	1
19	9M6738	CLAMP	4
20	4K1209	HOSE	1
21	5J4297	TUBE ASSEM.	1

REF. NO.	PART NUMBER	DESCRIPTION	QTY
1	4D2886	CLIP	1
2	4D1667	PLATE	1
3	1S1476	CLIP	2
4	S1594	BOLT	2
	1D4717	NUT	2
5	3B4506	LOCKWASHER	3
	4B5271	WASHER	3
6	S509	BOLT	1
7	5J9915	TUBE ASSEM.	1
8	9S1366	BOLT	1
9	3B4508	LOCKWASHER	2
10	7B3235	BOLT (Used without 5J5208 Adapter Group)	1

REF. NO.	PART NUMBER	DESCRIPTION	QTY
22	5J1356	SEAL	1
23	S1571	BOLT	4
24	5J1358	SEAL	1

REF. NO.	PART NUMBER	DESCRIPTION	QTY
25	7B3235	BOLT—(1.375" long)	2
	9S1366	BOLT—(2.50" long)	2
	3B4508	LOCKWASHER	4
26	1H8128	SEAL	1
27	S1589	BOLT	4
	3B4510	LOCKWASHER	4
28	5J9914	TUBE ASSEM.	1
29	5M7908	PLUG ASSEM. (Part of 5J9914 Tube Assem.)	1
	3J1907	SEAL (Part of 5M7908 Plug Assem.)	1

106290

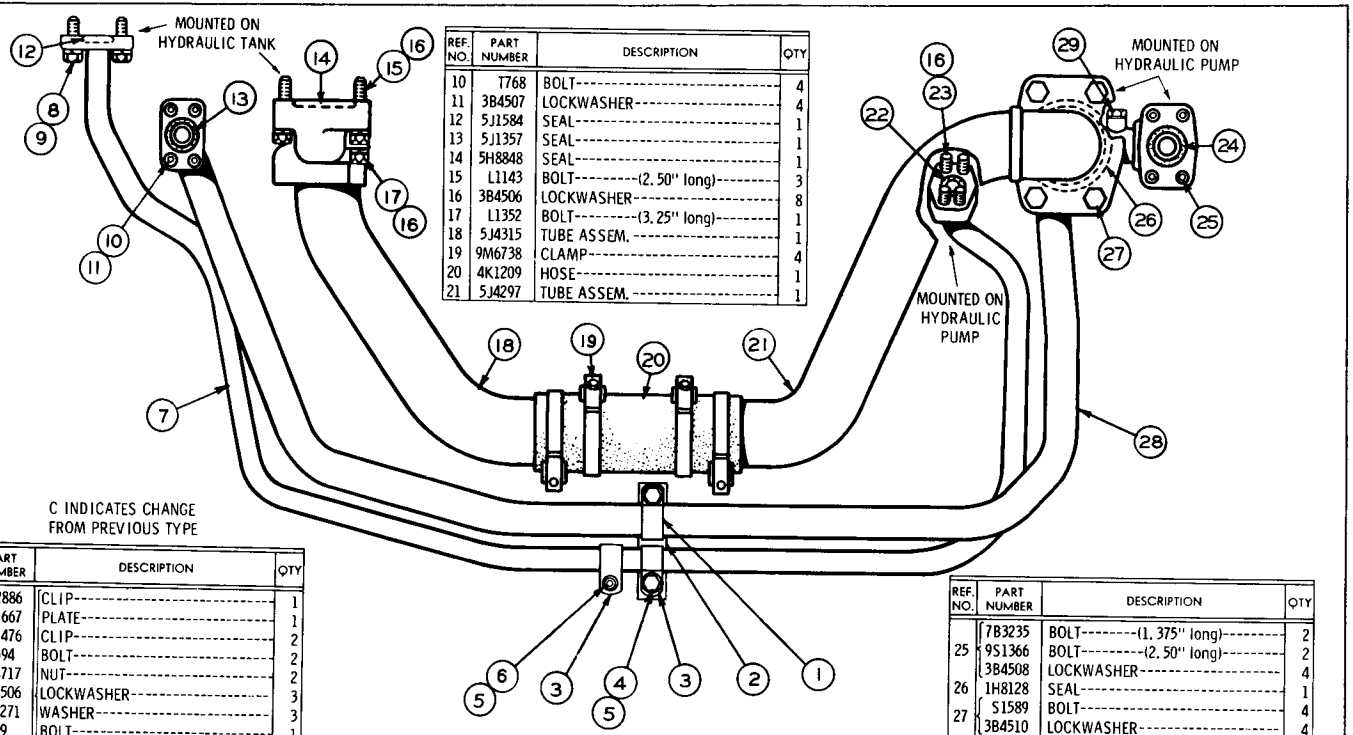

REF. NO.	PART NUMBER	DESCRIPTION	QTY
10	T768	BOLT	4
11	3B4507	LOCKWASHER	4
12	5J1584	SEAL	1
13	5J1357	SEAL	1
14	5H8848	SEAL	1
15	L1143	BOLT-(2.50" long)	3
16	3B4506	LOCKWASHER	8
17	L1352	BOLT-(3.25" long)	1
18	5J4315	TUBE ASSEM.	1
19	9M6738	CLAMP	4
20	4K1209	HOSE	1
21	5J4297	TUBE ASSEM.	1

C INDICATES CHANGE FROM PREVIOUS TYPE

	REF. NO.	PART NUMBER	DESCRIPTION	QTY
	1	4D2886	CLIP	1
	2	4D1667	PLATE	1
	3	1S1476	CLIP	2
	4	S1594	BOLT	2
		1D4717	NUT	2
	5	3B4506	LOCKWASHER	3
		4B5271	WASHER	3
	6	S509	BOLT	1
C	7	8S8770	TUBE ASSEM.	1
C	8	S1587	BOLT	2
	9	3B4508	LOCKWASHER (Used without 5J5208 Adapter Group)	2

REF. NO.	PART NUMBER	DESCRIPTION	QTY
22	5J1356	SEAL	1
23	S1571	BOLT	4
24	5J1358	SEAL	1

REF. NO.	PART NUMBER	DESCRIPTION	QTY
25	7B3235	BOLT-(1.375" long)	2
	9S1366	BOLT-(2.50" long)	2
	3B4508	LOCKWASHER	4
26	1H8128	SEAL	1
27	S1589	BOLT	4
	3B4510	LOCKWASHER	4
28	5J9914	TUBE ASSEM.	1
29	5M7908	PLUG ASSEM. (Part of 5J9914 Tube Assem.)	1
	3J1907	SEAL (Part of 5M7908 Plug Assem.)	1

5J4359 PUMP LINES GROUP—As Viewed from Right Hand Side of Tractor—Type 3

5J4359 PUMP LINES GROUP—As Viewed from Right Hand Side of Tractor—Type 4

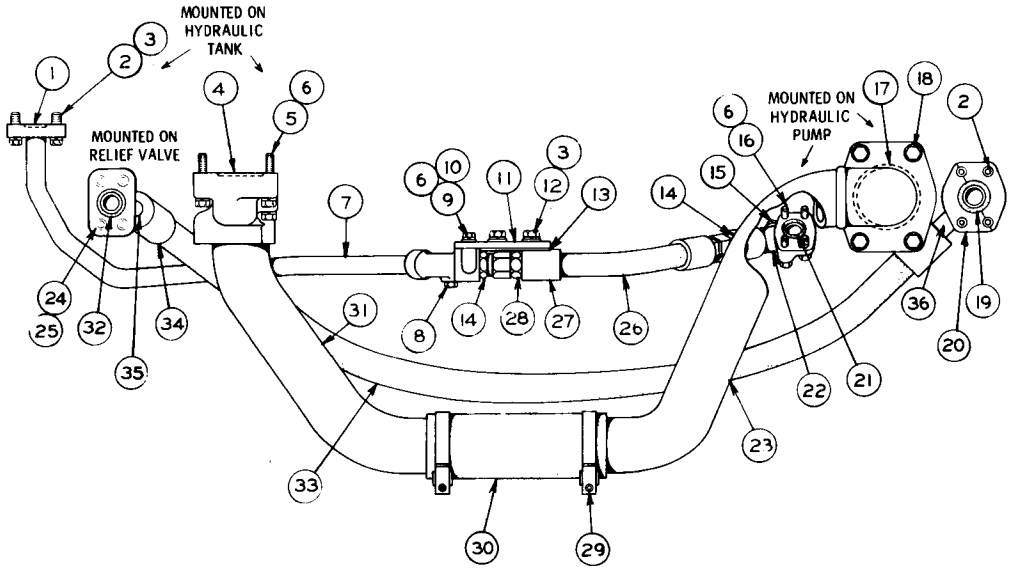

	REF. NO.	PART NUMBER	DESCRIPTION	QTY
C	1	6J3575	SEAL	1
C	2	S1587	BOLT	6
C	3	3B4508	LOCKWASHER	4
	4	5H8848	SEAL	1
	5	L1352	BOLT—(3.25 in. Long)	1
		L1143	BOLT—(2.50 in. Long)	3
C	6	3B4506	LOCKWASHER	10
	7	8S6659	TUBE ASSEM.	1
C	8	9S4191	PLUG	1
C		3J1907	SEAL	1
	9	1A2029	BOLT	2
C	10	4B4278	WASHER	2
	11	8S6648	PLATE	1
	12	S1585	BOLT	2
		4B4280	WASHER	2
	13	8S6647	SHIM	2
	14	2R6276	CONNECTOR	2
		3D2824	SEAL	2
C	15	9S4191	PLUG	1
C		3J1907	SEAL	1
	16	S1571	BOLT—(1.75 in. Long)	2
		S1588	BOLT—(1.25 in. Long)	2
	17	1H8128	SEAL	1
	18	S1589	BOLT	4
		3B4510	LOCKWASHER	4
C	19	4J524	SEAL	1
C	20	1P4579	FLANGE	2
C	21	6J3600	SEAL	1
	22	8S5375	ELBOW	1
	23	5J4297	TUBE ASSEM.	1
	24	T768	BOLT	4
	25	3B4507	LOCKWASHER	4
	26	8S6646	HOSE ASSEM.	1
▲		9S247	HOSE—10.1 in	
	27	3S7166	SLEEVE	2
	28	8S3759	COUPLING ASSEM.	2
C	29	4L4620	CLAMP	2
	30	4K1209	HOSE	1
	31	5J4315	TUBE ASSEM.	1
C	32	4J522	SEAL	1
C	33	2P9934	HOSE ASSEM.	1
▲		8S9348	HOSE—48.6 in	
	34	3S7116	SLEEVE	2
	35	2P9933	STEM ASSEM.—(45°)	1
	36	7S4105	STEM ASSEM.—(90°)	1

▲ ORDER BY THE INCH

C INDICATES CHANGE

143059

ONLY "CATERPILLAR" PARTS GIVE "CATERPILLAR" PERFORMANCE

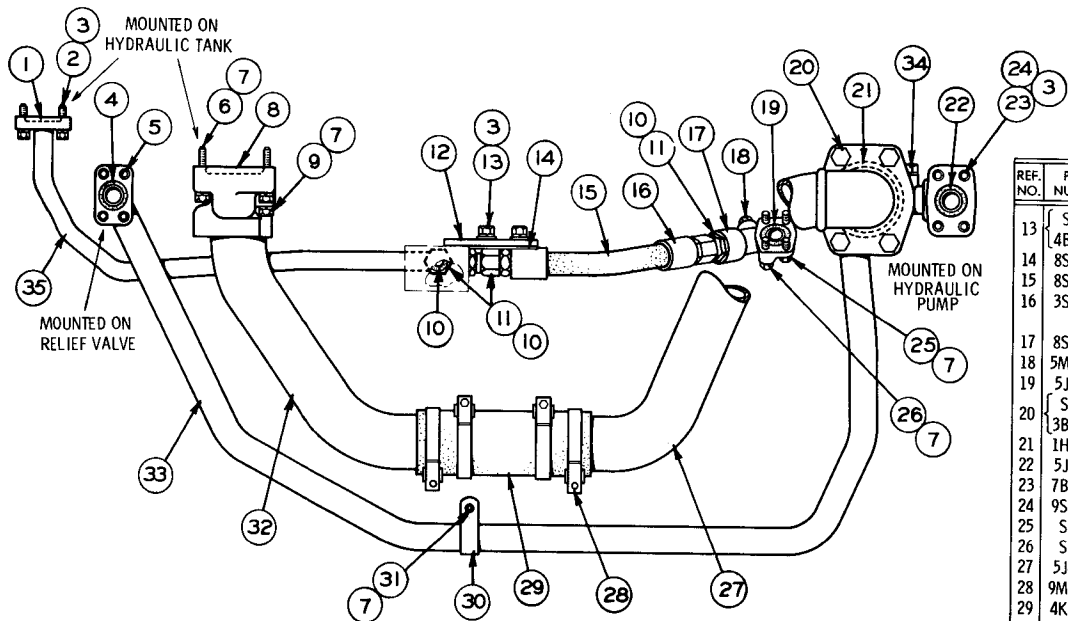

REF. NO.	PART NUMBER	DESCRIPTION	QTY
1	5J1584	SEAL	1
2	S1587	BOLT	2
3	3B4508	LOCKWASHER	8
4	5J1357	SEAL	1
5	T768	BOLT	4
	3B4507	LOCKWASHER	4

REF. NO.	PART NUMBER	DESCRIPTION	QTY
6	L1143	BOLT--(2.50" long)	3
7	3B4506	LOCKWASHER	9
8	5H8848	SEAL	1
9	L1352	BOLT--(3.25" long)	1
10	3D2824	SEAL	3
11	2R6276	CONNECTOR	3
12	8S6648	PLATE	1

REF. NO.	PART NUMBER	DESCRIPTION	QTY
13	S1585	BOLT	2
	4B4280	WASHER	2
14	8S6647	SHIM	2
15	8S6646	HOSE ASSEM. -(14.10" long overall)	1
16	3S7166	SLEEVE	2
		(Part of 8S6646 Hose Assem.)	
17	8S5375	ELBOW	1
18	5M7908	PLUG	1
19	5J1356	SEAL	1
20	S1589	BOLT	4
	3B4510	LOCKWASHER	4
21	1H8128	SEAL	1
22	5J1358	SEAL	1
23	7B3235	BOLT--(1.375" long)	2
24	9S1366	BOLT--(2.50" long)	2
25	S1588	BOLT--(1.25" long)	2
26	S1571	BOLT--(1.75" long)	2
27	5J4297	TUBE ASSEM.	1
28	9M6738	CLAMP	4
29	4K1209	HOSE	1
30	4D2886	CLIP	1
31	S509	BOLT	1
	4B4278	WASHER	1
32	5J4315	TUBE ASSEM.	1
33	5J9914	TUBE ASSEM.	1
34	5M7908	PLUG ASSEM.	1
		(Part of 5J9914 Tube Assem.)	
	3J1907	SEAL	1
		(Part of 5M7908 Plug Assem.)	
35	8S6644	TUBE ASSEM.	1

124407

8S4385 PUMP LINES GROUP—As Viewed from Right Hand Side of Tractor—Type 1

8S4385 PUMP LINES GROUP—As Viewed from Right Hand Side of Tractor—Type 2

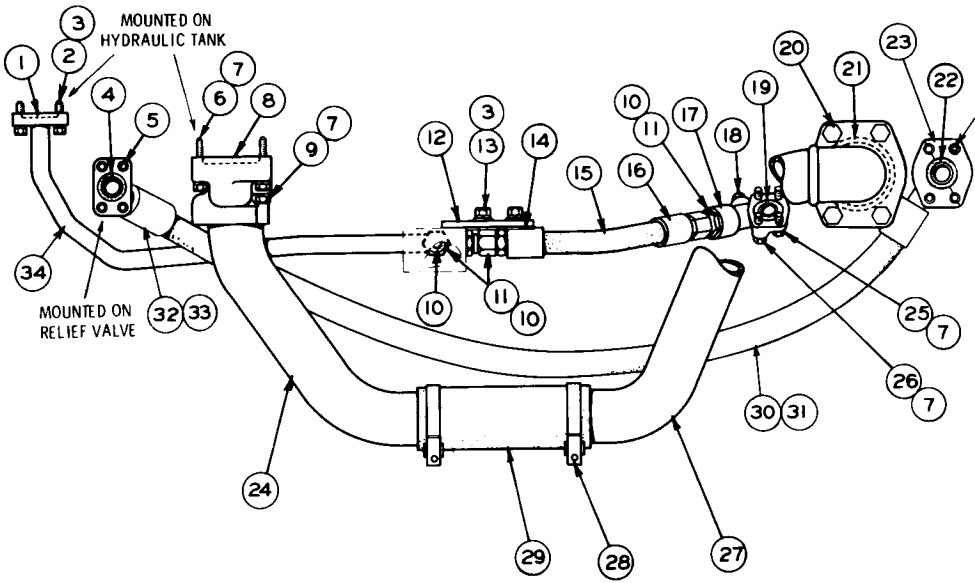

REF. NO.	PART NUMBER	DESCRIPTION	QTY
C 1	6J3575	SEAL	1
C 2	S1587	BOLT	4
3	3B4508	LOCKWASHER	8
C 4	4J522	SEAL	1
5	T768	BOLT	4
	3B4507	LOCKWASHER	4
6	L1143	BOLT—(2.50" long)	3
C 7	3B4506	LOCKWASHER	8
8	5H8848	SEAL	1
9	L1352	BOLT—(3.25" long)	1
10	3D2824	SEAL	3
11	2R6276	CONNECTOR	3
12	8S6648	PLATE	1

▲ ORDER BY THE INCH

13	S1585	BOLT	2
	4B4280	WASHER	2
14	8S6647	SHIM	2
	8S6646	HOSE ASSEM.	1
▲ 15	9S247	HOSE—10.1"	
C	8S3759	STEM ASSEM.	2
16	3S7166	SLEEVE	2
17	8S5375	ELBOW	2
C	9S4191	PLUG	1
C 18	3J1907	SEAL	1
C	6J3600	SEAL	1
19	S1589	BOLT	4
20	3B4510	LOCKWASHER	4
21	1H8128	SEAL	1
C 22	4J524	SEAL	1
C 23	1P4579	FLANGE	2
24	5J4315	TUBE ASSEM.	1
25	S1588	BOLT—(1.25" Long)	2
26	S1571	BOLT—(1.75" Long)	2
27	5J4297	TUBE ASSEM.	1
C 28	4L4620	CLAMP	2
29	4K1209	HOSE	1
C	2P9934	HOSE ASSEM.	1
▲ 30	8S9348	HOSE—48.6"	
31	7S4105	STEM ASSEM.	1
32	3S7116	SLEEVE	2
33	2P9933	STEM ASSEM.	1
34	8S6644	TUBE ASSEM.	1

C INDICATES CHANGE

140719

ONLY "CATERPILLAR" PARTS GIVE "CATERPILLAR" PERFORMANCE

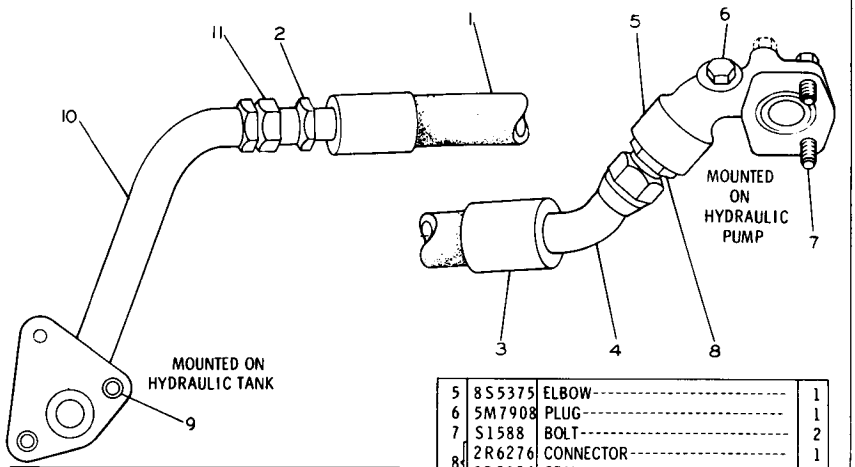

REF. NO.	PART NUMBER	DESCRIPTION	QTY
▲ 1	2P9893	HOSE ASSEM.	1
	9S247	HOSE---28.6"	
2	8S3759	COUPLING ASSEM.	1
3	3S7166	SLEEVE	2
4	9S9726	COUPLING ASSEM.	1
5	8S5375	ELBOW	1
6	5M7908	PLUG	1
7	S1588	BOLT	2
8	2R6276	CONNECTOR	1
	3D2824	SEAL	1
9	1A1460	BOLT	2
10	2P9888	TUBE ASSEM.	1
11	9S4939	FITTING	1

▲ ORDER BY THE INCH 140720

3P2891 PUMP LINES GROUP
Provides Field Replacement for 8S8770 Tube Assembly
shown on Page 24A-1

9S3537 PUMP LINES GROUP

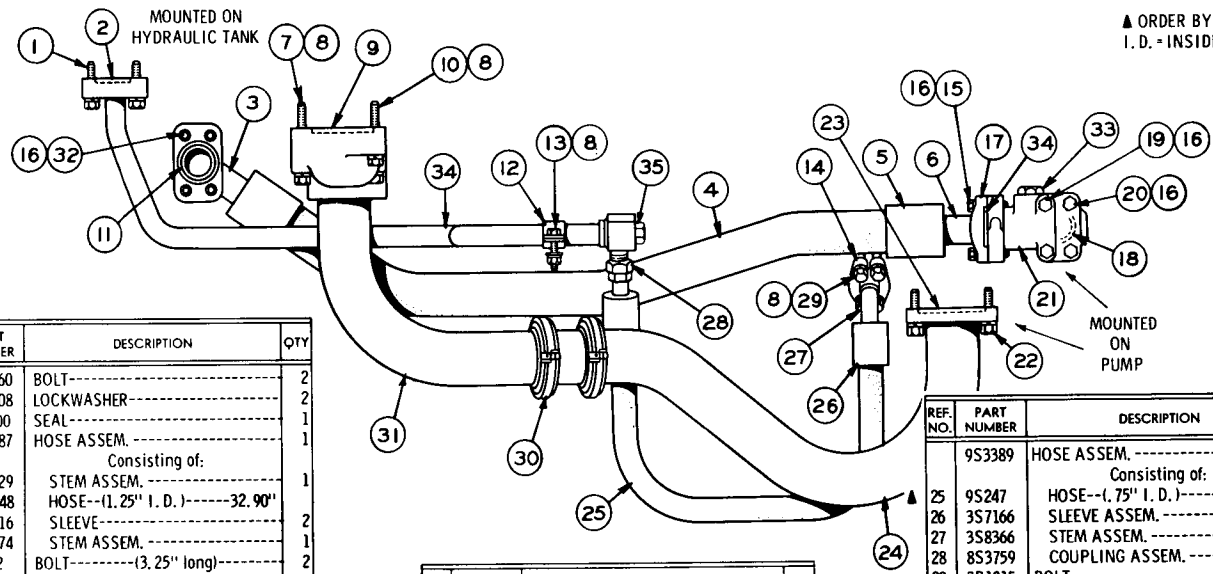

REF. NO.	PART NUMBER	DESCRIPTION	QTY
1	1A1460	BOLT	2
	3B4508	LOCKWASHER	2
2	6J3600	SEAL	1
	9S3387	HOSE ASSEM.	1
		Consisting of:	
3	9S3429	STEM ASSEM.	1
▲ 4	8S9348	HOSE--(1.25" I. D.)------32.90"	
5	3S7116	SLEEVE	2
6	3S8574	STEM ASSEM.	1
7	L1352	BOLT---------(3.25" long)--------	2
8	3B4506	LOCKWASHER	8
9	5H8848	SEAL	1
10	L1143	BOLT---------(2.50" long)--------	1
11	6J3625	SEAL	2
12	7S3919	CLIP---------(3.42" long)--------	1
	7S3916	CLIP---------(2.81" long)--------	1
13	1A2029	BOLT	1
	1D4717	NUT	1
	4B4278	WASHER	1
14	2K190	FLANGE	2
	6J3575	SEAL	1
15	3H5368	BOLT	4

REF. NO.	PART NUMBER	DESCRIPTION	QTY
16	3B4507	LOCKWASHER	12
17	3H3667	FLANGE	2
18	5J1357	SEAL	1
19	3B8428	BOLT---------(3.25" long)--------	2
20	1D4703	BOLT---------(2.50" long)--------	2
21	9S3390	ELBOW	1
22	S1589	BOLT	4
	3B4510	LOCKWASHER	4
23	2H6338	SEAL	1
24	8S8721	TUBE ASSEM.	1

REF. NO.	PART NUMBER	DESCRIPTION	QTY
	9S3389	HOSE ASSEM.	1
		Consisting of:	
25	9S247	HOSE--(.75" I. D.)------26.60"	
26	3S7166	SLEEVE ASSEM.	2
27	3S8366	STEM ASSEM.	1
28	8S3759	COUPLING ASSEM.	1
29	3B1915	BOLT	4
30	7S8156	COUPLING	1
	7K1978	SEAL ASSEM.	2
		(Part of 7S8156 Coupling)	
31	8S8723	TUBE ASSEM.	1
32	T768	BOLT	4
33	9S4191	PLUG	1
	3J1907	SEAL	1
34	9S3534	TUBE ASSEM.	1
35	9S4191	PLUG	1
	3J1907	SEAL	1
		(Parts of 9S3534 Assem.)	

109260

ONLY "CATERPILLAR" PARTS GIVE "CATERPILLAR" PERFORMANCE

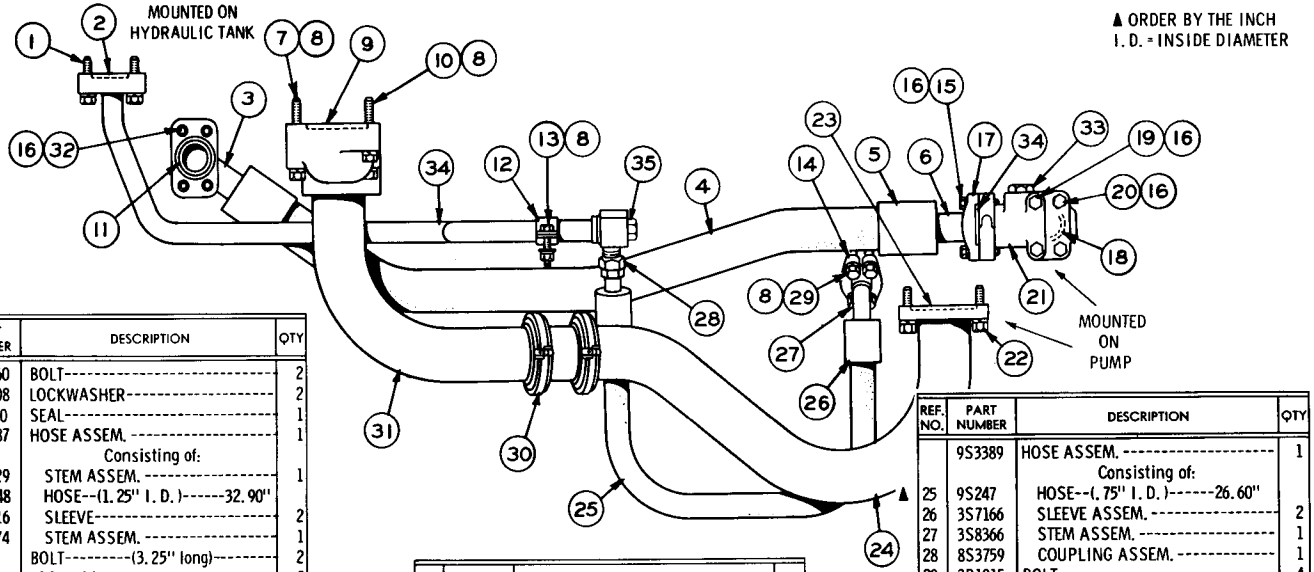

REF. NO.	PART NUMBER	DESCRIPTION	QTY
1	1A1460	BOLT	2
	3B4508	LOCKWASHER	2
2	6J3600	SEAL	1
	9S3387	HOSE ASSEM.	1
		Consisting of:	
3	9S3429	STEM ASSEM.	1
▲ 4	8S9348	HOSE--(1.25" I. D.)------32.90"	
5	3S7116	SLEEVE	2
6	3S8574	STEM ASSEM.	1
7	L1352	BOLT---------(3.25" long)--------	2
8	3B4506	LOCKWASHER	8
9	5H8848	SEAL	1
10	L1143	BOLT---------(2.50" long)--------	1
11	6J3625	SEAL	2
12	7S3919	CLIP---------(3.42" long)--------	1
	7S3916	CLIP---------(2.81" long)--------	1
13	1A2029	BOLT	1
	1D4717	NUT	1
	4B4278	WASHER	1
14	2K190	FLANGE	2
	6J3575	SEAL	1
15	3H5368	BOLT	4

REF. NO.	PART NUMBER	DESCRIPTION	QTY
16	3B4507	LOCKWASHER	12
17	3H3667	FLANGE	2
18	4J5573	SEAL	1
19	3B8428	BOLT---------(3.25" long)--------	2
20	1D4703	BOLT---------(2.50" long)--------	2
21	9S3390	ELBOW	1
22	S1589	BOLT	4
	3B4510	LOCKWASHER	4
23	2H6338	SEAL	1
24	8S8721	TUBE ASSEM.	1

REF. NO.	PART NUMBER	DESCRIPTION	QTY
	9S3389	HOSE ASSEM.	1
		Consisting of:	
25	9S247	HOSE--(.75" I. D.)------26.60"	
26	3S7166	SLEEVE ASSEM.	2
27	3S8366	STEM ASSEM.	1
28	8S3759	COUPLING ASSEM.	1
29	3B1915	BOLT	4
30	7S8156	COUPLING	1
	7K1978	SEAL ASSEM.	2
		(Part of 7S8156 Coupling)	
31	8S8723	TUBE ASSEM.	1
32	T768	BOLT	4
33	9S4191	PLUG	1
	3J1907	SEAL	1
34	9S3534	TUBE ASSEM.	1
35	9S4191	PLUG	1
	3J1907	SEAL	1
		(Parts of 9S3534 Assem.)	

109259

9S3537 PUMP LINES GROUP—Type 2

9S3537 PUMP LINES GROUP–Type 3

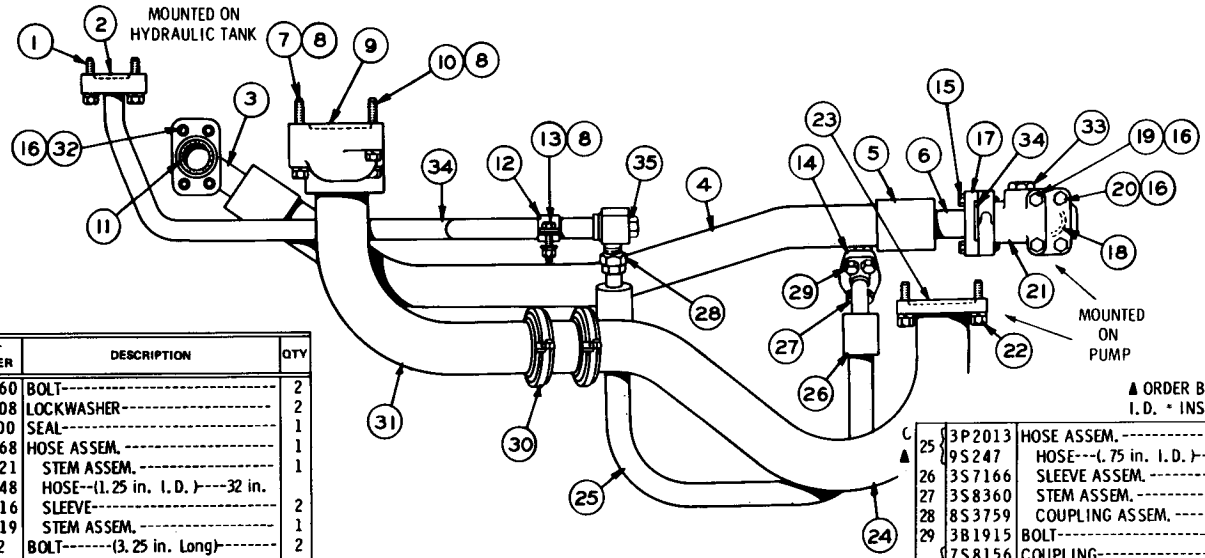

REF. NO.	PART NUMBER	DESCRIPTION	QTY
1	1A1460	BOLT	2
	3B4508	LOCKWASHER	2
2	6J3600	SEAL	1
C 3	2P9468	HOSE ASSEM.	1
	2P9921	STEM ASSEM.	1
▲ 4	8S9348	HOSE--(1.25 in. I.D.)---32 in.	
5	3S7116	SLEEVE	2
6	1P1219	STEM ASSEM.	1
7	L1352	BOLT-------(3.25 in. Long)-------	2
C 8	3B4506	LOCKWASHER	4
9	5H8848	SEAL	1
10	L1143	BOLT---------(2.50 in. Long)------	1
C 11	4J522	SEAL	2
12	7S3919	CLIP---------(3.42 in. Long)-----	1
	7S3916	CLIP---------(2.81 in. Long)-----	1
	1A2029	BOLT	1
13	1D4717	NUT	1
	4B4278	WASHER	1
C 14	1P4576	FLANGE	2
C	4J5267	SEAL	1
15	3H5368	BOLT	4

C 16	3B4507	LOCKWASHER	8
C 17	1P4578	FLANGE	2
18	4J5573	SEAL	1
19	3B8428	BOLT-------(3.25 in. Long)------	2
20	1D4703	BOLT--------(2.50 in. Long)------	2
21	9S3390	ELBOW	1
22	S1589	BOLT	4
	3B4510	LOCKWASHER	4
23	2H6338	SEAL	1
24	8S8721	TUBE ASSEM.	1

▲ ORDER BY THE INCH I.D. * INSIDE DIAMETER

C ▲ 25	3P2013	HOSE ASSEM.	1
	9S247	HOSE---(.75 in. I.D.)---26.60 in.	
26	3S7166	SLEEVE ASSEM.	2
27	3S8360	STEM ASSEM.	1
28	8S3759	COUPLING ASSEM.	1
29	3B1915	BOLT	4
30	7S8156	COUPLING	1
	7K1978	SEAL ASSEM.	2
31	8S8723	TUBE ASSEM.	1
32	T768	BOLT	4
33	9S4191	PLUG	1
	3J1907	SEAL	1
34	9S3534	TUBE ASSEM.	1
35	9S4191	PLUG	1
	3J1907	SEAL	1

C INDICATES CHANGE

142239

ONLY "CATERPILLAR" PARTS GIVE "CATERPILLAR" PERFORMANCE

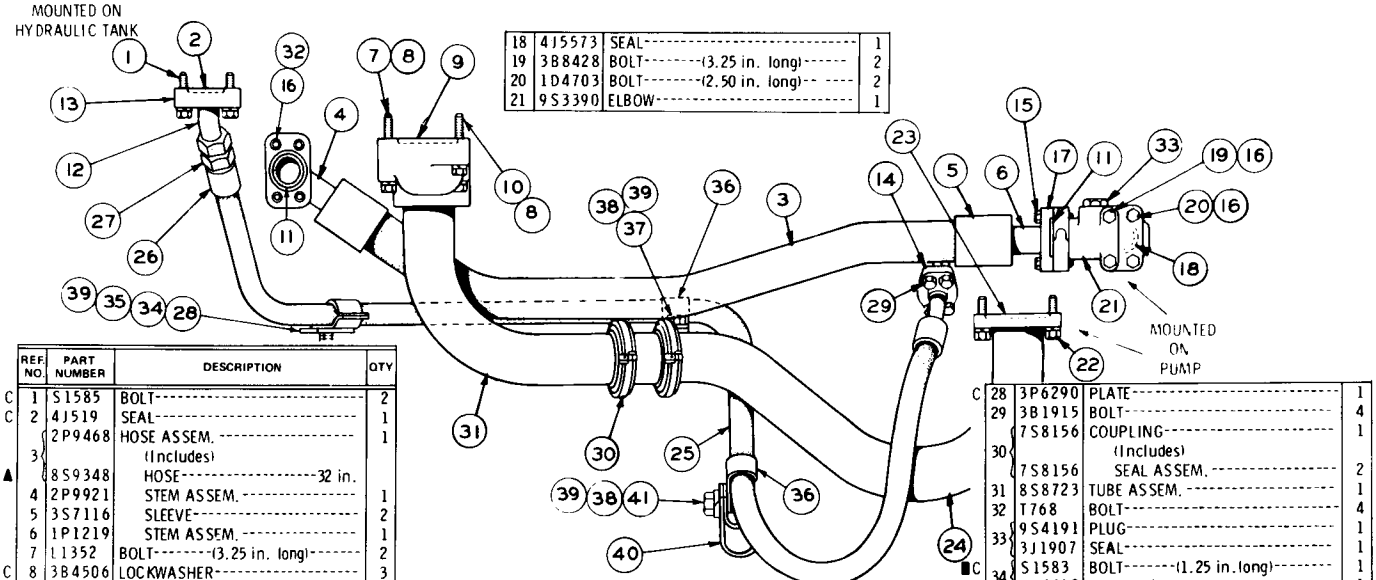

REF. NO.	PART NUMBER	DESCRIPTION	QTY
C 1	S1585	BOLT	2
C 2	4J519	SEAL	1
	2P9468	HOSE ASSEM.	1
3		(Includes)	
▲	8S9348	HOSE--32 in.	
4	2P9921	STEM ASSEM.	1
5	3S7116	SLEEVE	2
6	1P1219	STEM ASSEM.	1
7	L1352	BOLT--(3.25 in. long)	2
C 8	3B4506	LOCKWASHER	3
9	5H8848	SEAL	1
10	L1143	BOLT--(2.50 in. long)	1
11	4J522	SEAL	2
C 12	3D7944	ELBOW	1
C	3D2824	SEAL	1
C 13	3P1184	FLANGE	1
14	1P4576	FLANGE	2
	4J5267	SEAL	1
15	3H5368	BOLT	4
16	3B4507	LOCKWASHER	8
17	1P4578	FLANGE	2
18	4J5573	SEAL	1
19	3B8428	BOLT--(3.25 in. long)	2
20	1D4703	BOLT--(2.50 in. long)	2
21	9S3390	ELBOW	1
22	S1589	BOLT	4
	3B4510	LOCKWASHER	4
23	2H6338	SEAL	1
24	8S8721	TUBE ASSEM.	1
C	3P6163	HOSE ASSEM.	1
		(Includes)	
● 25	5P180	HOSE--153 cm (60.23 in.)	
	3S8360	STEM ASSEM.	1
26	3S7166	SLEEVE	2
27	8S3759	COUPLING ASSEM.	1
C 28	3P6290	PLATE	1
29	3B1915	BOLT	4
	7S8156	COUPLING	1
30		(Includes)	
	7S8156	SEAL ASSEM.	2
31	8S8723	TUBE ASSEM.	1
32	T768	BOLT	4
	9S4191	PLUG	1
33	3J1907	SEAL	1
■C	S1583	BOLT--(1.25 in. long)	1
34	3B4512	LOCKWASHER	1
■C	1A1460	BOLT--(2.00 in. long)	1
35	9B1006	WASHER	1
	8S23	CLIP--(slotted)	3
C 36	8S24	CLIP--(tab)	3
C 37	S1595	BOLT	2
C 38	1D4719	NUT	3
C 39	3B4508	LOCKWASHER	6
	7F1906	CLIP--(short)	1
■C 40	4D7268	CLIP--(long)	1
C 41	6H1717	BOLT	1

● ORDER BY THE CENTIMETRE ▲ ORDER BY THE INCH

■ USE AS REQUIRED 145548

9S3537 PUMP LINES GROUP—Type 4

9S3537 PUMP LINES GROUP—Type 5

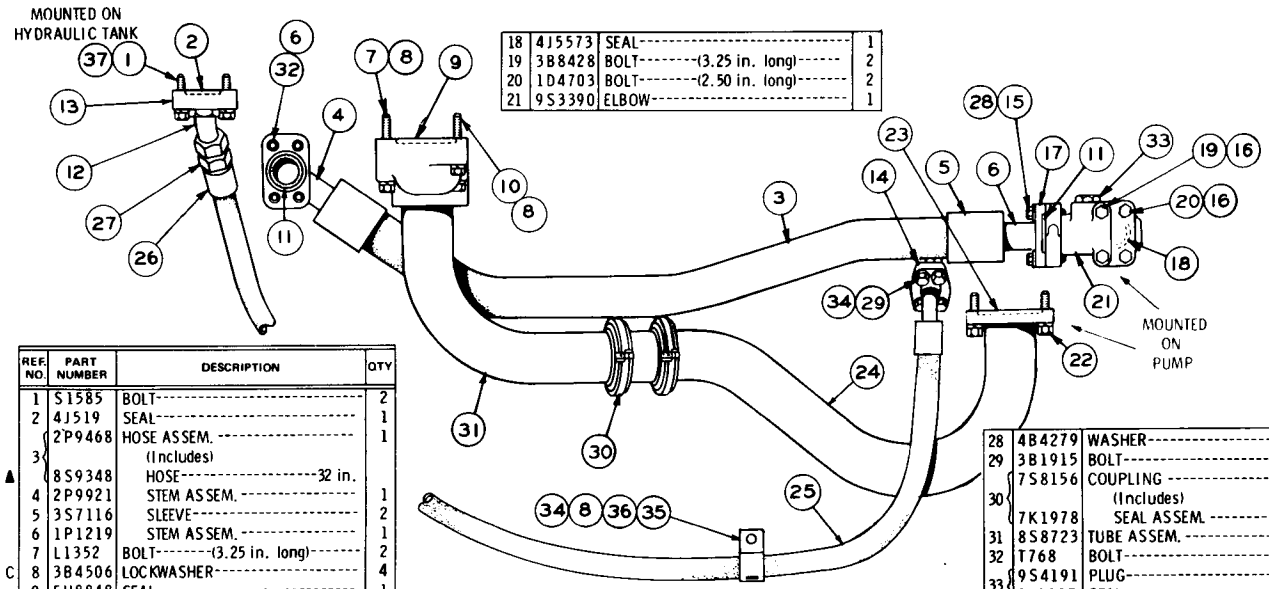

REF. NO.	PART NUMBER	DESCRIPTION	QTY
1	S1585	BOLT	2
2	4J519	SEAL	1
3	2P9468	HOSE ASSEM. (Includes)	1
▲	8S9348	HOSE—32 in.	
4	2P9921	STEM ASSEM.	1
5	3S7116	SLEEVE	2
6	1P1219	STEM ASSEM.	1
7	L1352	BOLT—(3.25 in. long)	2
C 8	3B4506	LOCKWASHER	4
9	5H8848	SEAL	1
10	L1143	BOLT—(2.50 in. long)	1
11	4J522	SEAL	2
12	3D7944	ELBOW	1
	3D2824	SEAL	1
13	3P1184	FLANGE	1
14	1P4576	FLANGE	2
	4J5267	SEAL	1
15	3H5368	BOLT	4
16	3B4507	LOCKWASHER	8
17	1P4578	FLANGE	2
18	4J5573	SEAL	1
19	3B8428	BOLT—(3.25 in. long)	2
20	1D4703	BOLT—(2.50 in. long)	2
21	9S3390	ELBOW	1
22	S1589	BOLT	4
	3B4510	LOCKWASHER	4
23	2H6338	SEAL	1
24	8S8721	TUBE ASSEM.	1
25	3P6163	HOSE ASSEM. (Includes)	1
●	5P180	HOSE—153 cm(60.23 in.)	
	3S8360	STEM ASSEM.	1
26	3S7166	SLEEVE	2
27	8S3759	COUPLING ASSEM.	1
28	4B4279	WASHER	4
29	3B1915	BOLT	4
30	7S8156	COUPLING (Includes)	1
	7K1978	SEAL ASSEM.	2
31	8S8723	TUBE ASSEM.	1
32	T768	BOLT	4
33	9S4191	PLUG	1
	3J1907	SEAL	1
C 34	4B4278	WASHER	5
C 35	8S23	CLIP—(tab)	1
	8S24	CLIP—(slotted)	1
36	S1594	BOLT	1
37	3B4508	LOCKWASHER	2

● ORDER BY THE CENTIMETRE ▲ ORDER BY THE INCH

C INDICATES CHANGE

148678

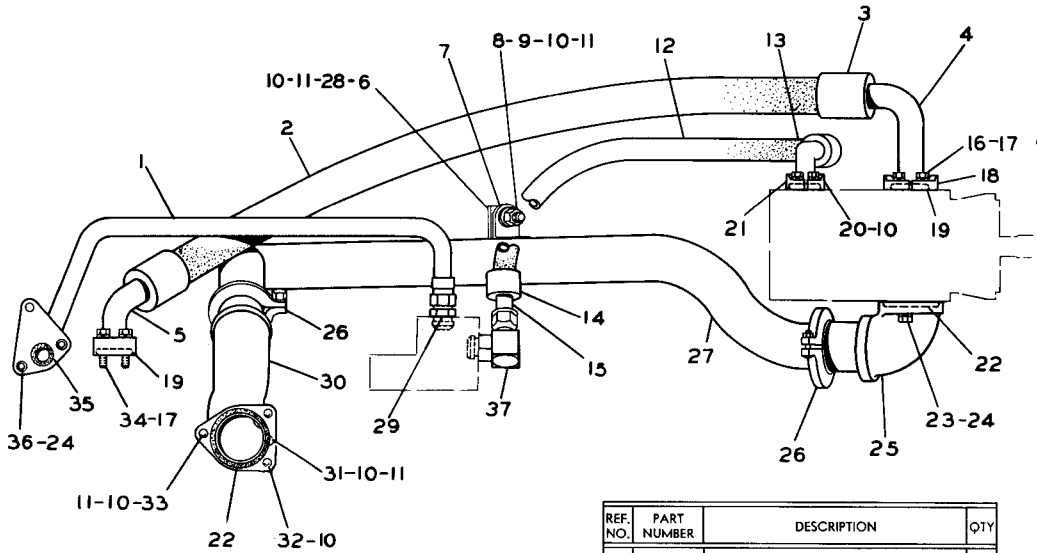

▲ ORDER BY THE INCH

REF. NO.	PART NUMBER	DESCRIPTION	QTY
1	9S7242	TUBE ASSEM.	1
	9S6818	HOSE ASSEM.	1
		Consisting of:	
▲ 2	8S9348	HOSE---43"	
3	3S7116	SLEEVE	2
4	8S8221	STEM ASSEM.	1
5	9S6691	STEM ASSEM.	1

REF. NO.	PART NUMBER	DESCRIPTION	QTY
6	9S7191	ANGLE	1
7	2S7010	CLIP	1
8	S1594	BOLT	1
9	1D4717	NUT	1
10	3B4506	LOCKWASHER	10
11	4B4278	WASHER	3
	9S6416	HOSE ASSEM.	1
		Consisting of:	
▲ 12	9S247	HOSE---38"	
13	3S8363	STEM ASSEM.	1
14	3S7166	SLEEVE	2
15	8S3759	COUPLING ASSEM.	1
16	T772	BOLT	4
17	3B4507	LOCKWASHER	8
18	3H3667	FLANGE	2
19	4J522	SEAL	2
20	S1591	BOLT	4
21	2K190	FLANGE	2
	4J5267	SEAL	1
22	7F2122	SEAL	2
23	S1587	BOLT	2
24	3B4508	LOCKWASHER	4
25	9S7192	ELBOW ASSEM.	1
26	9S7241	SEAL ASSEM.	2
27	9S7189	TUBE	1
28	L1351	BOLT	1
29	2R6276	CONNECTOR	1
30	9S7188	ELBOW	1
31	9B7237	BOLT	1
32	L1143	BOLT---(2.50" long)	2
33	1A5183	BOLT---(4.75" long)	1
34	T768	BOLT	4
35	6J3600	SEAL	1
36	1A1460	BOLT	2
37	4S1509	ELBOW	1

128297

9S7247 PUMP LINES GROUP

ONLY "CATERPILLAR" PARTS GIVE "CATERPILLAR" PERFORMANCE

9S7247 PUMP LINES GROUP—Type 2

Part of 9S6853 Hydraulic Control Arrangement listed on Page 2

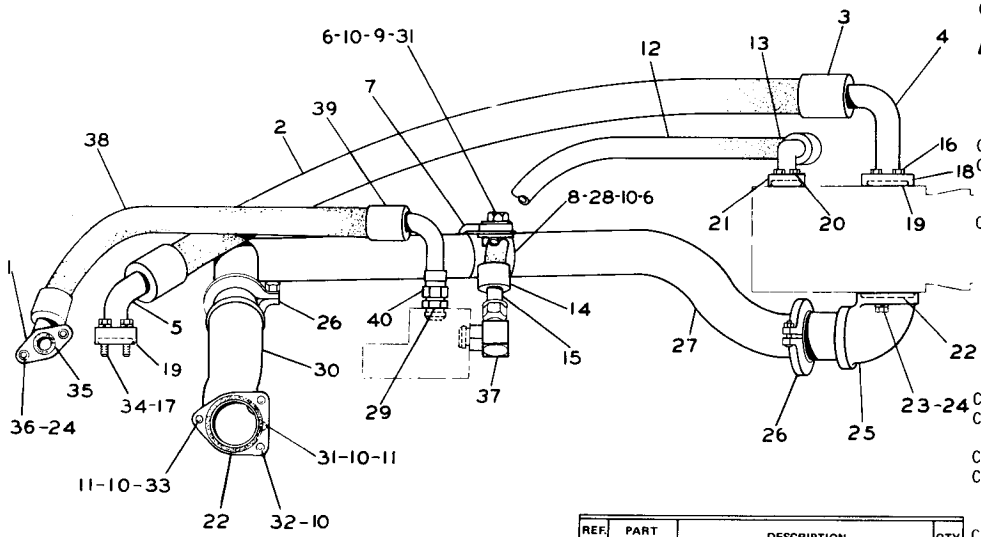

	REF. NO.	PART NUMBER	DESCRIPTION	QTY
C	1	3P1184	FLANGE	1
C▲	2	9S6818	HOSE ASSEM.	1
		8S9348	HOSE—46 in.	
	3	3S7116	SLEEVE	2
	4	8S8221	STEM ASSEM.	1
	5	9S6691	STEM ASSEM.	1
C	6	3K925	WASHER	3
	7	2S7010	CLIP	1
C	8	1P3761	STRAP	1
	9	1D4717	NUT	1
C	10	3B4506	LOCKWASHER	5
C	11	4B4278	WASHER	2
▲	12	9S6416	HOSE ASSEM.	1
		9S247	HOSE—38 in.	
	13	3S8363	STEM ASSEM.	1
	14	3S7166	SLEEVE	2
	15	8S3759	COUPLING ASSEM.	1
	16	T772	BOLT	4
C	17	3B4507	LOCKWASHER	4
C	18	1P4578	FLANGE	2
	19	4J522	SEAL	2
	20	S1591	BOLT	4
C	21	1P4576	FLANGE	2
		4J5267	SEAL	1
	22	7F2122	SEAL	2
	23	S1587	BOLT	2
	24	3B4508	LOCKWASHER	4
	25	9S7192	ELBOW ASSEM.	1
	26	9S7241	SEAL ASSEM.	2
	27	9S7189	TUBE	1
	28	L1351	BOLT	1
C	29	2R6276	CONNECTOR	2
C		3D2824	SEAL	2
	30	9S7188	ELBOW	1
C	31	S1588	BOLT	2
C	32	L1143	BOLT—(2.50 in. long)	1
	33	1A5183	BOLT—(4.75 in. long)	1
	34	T768	BOLT	4
C	35	4J519	SEAL	1
C	36	S1585	BOLT	2
	37	4S1509	ELBOW	1
		3P1181	HOSE ASSEM.	1
▲	38	9S247	HOSE—31.50 in.	
		9S9724	COUPLING ASSEM.—(60°)	1
	39	3S7166	SLEEVE	2
	40	1P1711	COUPLING ASSEM.—(90°)	1

▲ ORDER BY THE INCH C INDICATES CHANGE 142915

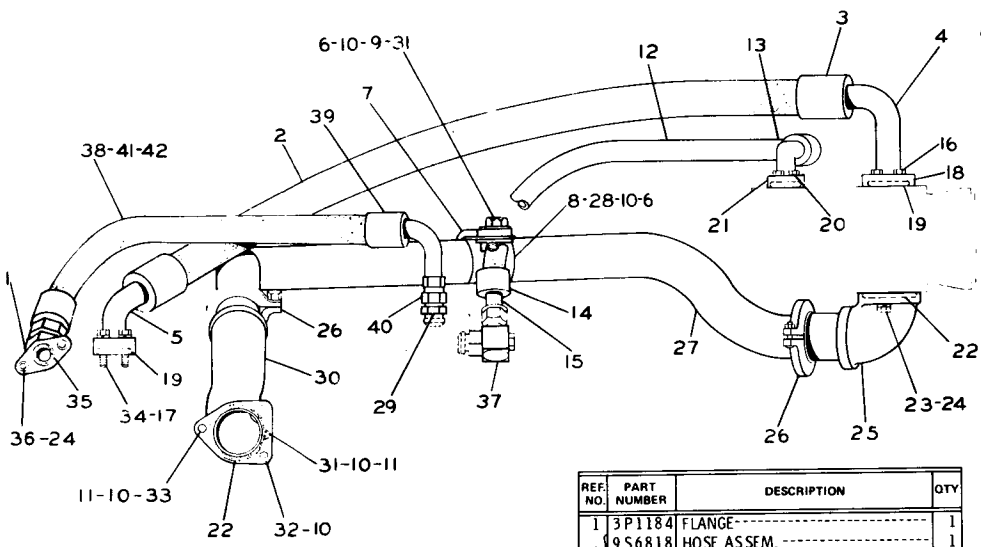

REF. NO.	PART NUMBER	DESCRIPTION	QTY
1	3P1184	FLANGE	1
2	9S6818	HOSE ASSEM.	1
▲	8S9348	HOSE—46 in.	
3	3S7116	SLEEVE	2
4	8S8221	STEM ASSEM.	1
5	9S6691	STEM ASSEM.	1
6	3K925	WASHER	3
7	2S7010	CLIP	1
8	1P3761	STRAP	1
9	1D4717	NUT	1
10	3B4506	LOCKWASHER	5
11	4B4278	WASHER	2
12	9S6416	HOSE ASSEM.	1
▲	9S247	HOSE—38 in.	
13	3S8363	STEM ASSEM.	1
14	3S7166	SLEEVE	2
15	8S3759	COUPLING ASSEM.	1
16	T772	BOLT	4
17	3B4507	LOCKWASHER	4
18	1P4578	FLANGE	2
19	4J522	SEAL	2
20	S1591	BOLT	4
21	1P4576	FLANGE	2
	4J5267	SEAL	1
22	7F2122	SEAL	2
23	S1587	BOLT	2
24	3B4508	LOCKWASHER	4
25	9S7192	ELBOW ASSEM.	1
26	9S7241	SEAL ASSEM.	2
27	9S7189	TUBE	1
28	L1351	BOLT	1
C 29	2R6276	CONNECTOR	1
30	9S7188	ELBOW	1
31	S1588	BOLT	2
32	L1143	BOLT—(2.50 in. Long)	1
33	1A5183	BOLT—(4.75 in. Long)	1
34	T768	BOLT	4
35	4J519	SEAL	1
36	S1585	BOLT	2
37	4S1509	ELBOW	1
C	3P6027	HOSE ASSEM.	1
● 38	5P180	HOSE—81 cm (31.5 in.)	
	8S3759	COUPLING ASSEM.—(60°)	1
39	3S7166	SLEEVE	2
40	1P1711	COUPLING ASSEM.—(90°)	1
C 41	307944	ELBOW	1
42	3D2824	SEAL	2

● ORDER BY THE CENTIMETRE ▲ ORDER BY THE INCH

C INDICATES CHANGE

142916

9S7247 PUMP LINES GROUP—Type 3

Part of 9S6853 Hydraulic Control Arrangement listed on Page 2

9S7246 PUMP LINES GROUP

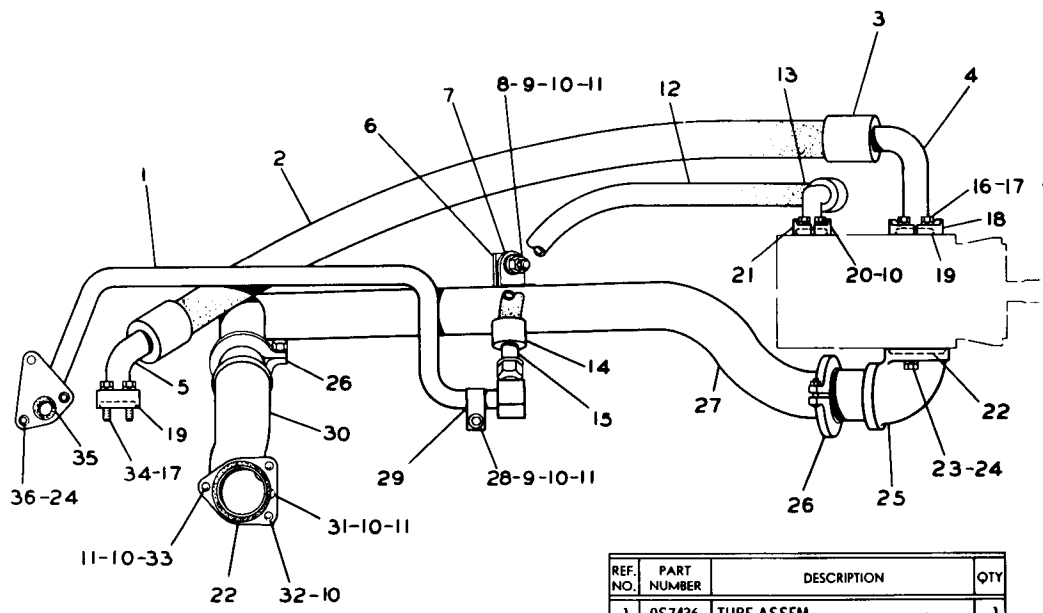

REF. NO.	PART NUMBER	DESCRIPTION	QTY
1	9S7436	TUBE ASSEM.	1
	9S6818	HOSE ASSEM.	1
		Consisting of:	
▲ 2	8S9348	HOSE--43"	
3	3S7116	SLEEVE	2
4	8S8221	STEM ASSEM.	1
5	9S6691	STEM ASSEM.	1

▲ ORDER BY THE INCH

REF. NO.	PART NUMBER	DESCRIPTION	QTY
6	9S7191	ANGLE	1
7	2S7010	CLIP	1
8	S1594	BOLT	1
9	1D4717	NUT	2
10	3B4506	LOCKWASHER	11
11	4B4278	WASHER	6
	9S6416	HOSE ASSEM.	1
		Consisting of:	
▲ 12	9S247	HOSE--38"	
13	3S8363	STEM ASSEM.	1
14	3S7166	SLEEVE	2
15	8S3759	COUPLING ASSEM.	1
16	T772	BOLT	4
17	3B4507	LOCKWASHER	8
18	3H3667	FLANGE	2
19	4J522	SEAL	2
20	S1591	BOLT	4
21	2K190	FLANGE	2
	4J5267	SEAL	1
22	7F2122	SEAL	2
23	S1587	BOLT	2
24	3B4508	LOCKWASHER	4
25	9S7192	ELBOW ASSEM.	1
26	9S7241	SEAL ASSEM.	2
27	9S7189	TUBE	1
28	V196	BOLT--(1.25" long)	1
	L1351	BOLT--(.875" long)	1
29	7S3916	CLIP--(Tab)	1
	7S3919	CLIP--(Plain)	1
30	9S7188	ELBOW ASSEM.	1
31	9B7237	BOLT	1
32	L1143	BOLT--(2.50" long)	2
33	1A5183	BOLT--(4.75" long)	1
34	T768	BOLT	4
35	6J3600	SEAL	1
36	1A1460	BOLT	2

128299

ONLY "CATERPILLAR" PARTS GIVE "CATERPILLAR" PERFORMANCE

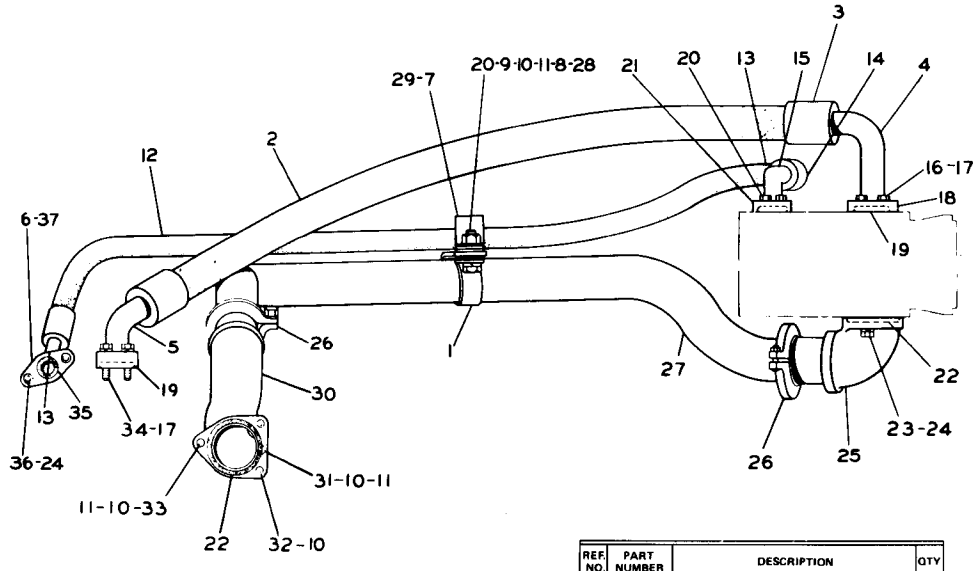

▲ ORDER BY THE INCH

REF. NO.	PART NUMBER	DESCRIPTION	QTY
C 1	1P3761	STRAP	1
2	9S6818	HOSE ASSEM.	1
▲	8S9348	HOSE--45.6 in.	
3	3S7116	SLEEVE	2
4	8S8221	STEM ASSEM.	1
5	9S6691	STEM ASSEM.	1
C 6	3P1184	FLANGE	1
7	2S7010	CLIP	1
C 8	3K925	BOLT	3
9	1D4717	NUT	1
10	3B4506	LOCKWASHER	5
11	4B4278	WASHER	2
C 12	3P1182	HOSE ASSEM.	1
▲	9S247	HOSE--59.60 in.	
13	3S8363	STEM ASSEM.	1
14	3S7166	SLEEVE	2
15	9S9724	COUPLING ASSEM.	1
16	T772	BOLT	4
17	3B4507	LOCKWASHER	4
C 18	1P4578	FLANGE	2
19	4J522	SEAL	2
20	S1591	BOLT--(1.50 in. Long)	5
C 21	1P4576	FLANGE	2
	4J5267	SEAL	1
22	7F2122	SEAL	2
23	S1587	BOLT	2
24	3B4508	LOCKWASHER	4
25	9S7192	ELBOW ASSEM.	1
26	9S7241	SEAL ASSEM.	2
27	9S7189	TUBE	1
28	L1351	BOLT--(.875 in. Long)	1
C 29	8S23	CLIP--(Tab)	1
	8S24	CLIP--(Plain)	1
30	9S7188	ELBOW ASSEM.	1
C 31	S1588	BOLT	1
32	L1143	BOLT--(2.50 in. Long)	1
33	1A5183	BOLT--(4.75 in. Long)	1
34	T768	BOLT	4
C 35	4J519	SEAL	1
C 36	S1585	BOLT	2
C 37	2R6276	ADAPTER	1
	3D2824	SEAL	1

C INDICATES CHANGE

142917

9S7246 PUMP LINES GROUP—Type 2

9S7246 PUMP LINES GROUP—Type 3

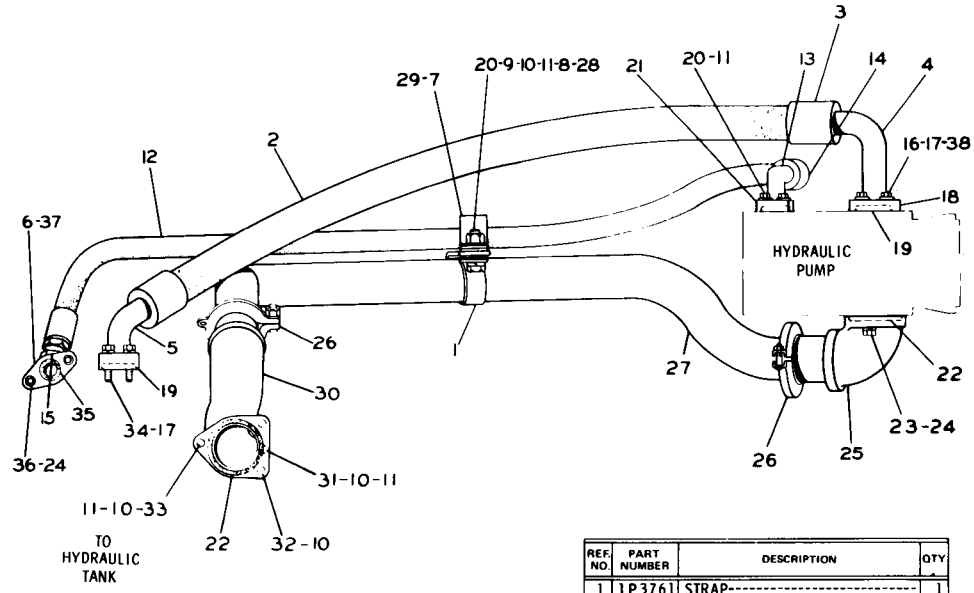

	REF. NO.	PART NUMBER	DESCRIPTION	QTY
	1	1P3761	STRAP	1
C▲	2	9S6818	HOSE ASSEM.	1
		5P182	HOSE—115.82 cm(45.6 in.)	
	3	3S7116	SLEEVE	2
	4	8S8221	STEM ASSEM.	1
	5	9S6691	STEM ASSEM.	1
	6	3P1184	FLANGE	1
	7	2S7010	CLIP	1
	8	3K925	BOLT	3
	9	1D4717	NUT	1
	10	3B4506	LOCKWASHER	5
C	11	4B4278	WASHER	6
C A	12	3P6028	HOSE ASSEM.	1
		5P180	HOSE—153.67 cm(60.5 in.)	
	13	3S8363	STEM ASSEM.—(90°)	1
	14	3S7166	SLEEVE	2
	15	8S3759	STEM ASSEM.	1
	16	T772	BOLT	4
	17	3B4507	LOCKWASHER	4
	18	1P4578	FLANGE	2
	19	4J522	SEAL	2
	20	S1591	BOLT—1.50 in.(3.81 cm) long	5
	21	1P4576	FLANGE	2
		4J5267	SEAL	1
	22	7F2122	SEAL	2
	23	S1587	BOLT	2
	24	3B4508	LOCKWASHER	4
	25	9S7192	ELBOW ASSEM.	1
	26	9S7241	SEAL ASSEM.	2
	27	9S7189	TUBE	1
	28	L1351	BOLT—.875 in.(2.22 cm) long	1
	29	8S23	CLIP—(tab)	1
		8S24	CLIP—(plain)	1
	30	9S7188	ELBOW ASSEM.	1
	31	S1588	BOLT	1
	32	L1143	BOLT—2.50 in.(6.35 cm) long	1
	33	1A5183	BOLT—4.75 in.(12.07 cm) long	1
	34	T768	BOLT	4
	35	4J519	SEAL	1
	36	S1585	BOLT	2
C	37	307944	ELBOW	1
		3D2824	SEAL	1
C	38	4B4279	WASHER	4

▲ ORDER BY THE CENTIMETRE

C INDICATES CHANGE

203777

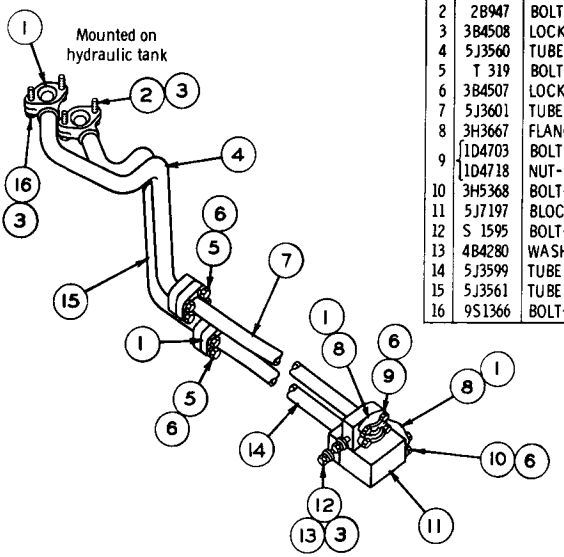

REF NO	PART NUMBER	DESCRIPTION	QTY
1	5J1357	SEAL	5
2	2B947	BOLT	3
3	3B4508	LOCKWASHER	6
4	5J3560	TUBE ASSEM. --(17" long overall)---	1
5	T 319	BOLT	12
6	3B4507	LOCKWASHER	20
7	5J3601	TUBE ASSEM. --(67" long overall)---	1
8	3H3667	FLANGE	4
9	1D4703	BOLT	4
	1D4718	NUT	4
10	3H5368	BOLT	4
11	5J7197	BLOCK	1
12	S 1595	BOLT	2
13	4B4280	WASHER	2
14	5J3599	TUBE ASSEM. --(63" long overall)---	1
15	5J3561	TUBE ASSEM. --(16" long overall)---	1
16	9S1366	BOLT	1

5S6571 BULLDOZER LINES GROUP—Type 1
AS VIEWED FROM RIGHT HAND SIDE OF TRACTOR

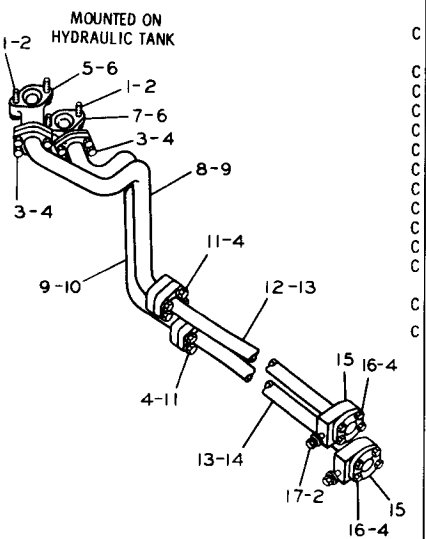

	REF NO.	PART NUMBER	DESCRIPTION	QTY
C	1	2B947	BOLT	4
	2	3B4508	LOCKWASHER	6
C	3	T768	BOLT	8
C	4	3B4507	LOCKWASHER	24
C	5	3R2447	ELBOW	1
C	6	4J522	SEAL	2
C	7	2P7196	ELBOW	1
C	8	3P2107	TUBE ASSEM.	1
C	9	4J523	SEAL	2
C	10	3P2105	TUBE ASSEM.	1
C	11	T319	BOLT	8
C	12	3P3762	TUBE ASSEM.	1
C	13	1P3704	SEAL	2
	14	5J3599	TUBE ASSEM.	1
C	15	1P4578	FLANGE	4
C	16	1D4703	BOLT	8
		1D4718	NUT	8
	17	S1595	BOLT	2
		4B4280	WASHER	2

C INDICATES CHANGE

5S6571 BULLDOZER LINES GROUP—Type 2
AS VIEWED FROM RIGHT HAND SIDE OF TRACTOR

5J3566 BULLDOZER LINES GROUP—As Viewed from Front Right Hand Side of Tractor

REF NO	PART NUMBER	DESCRIPTION	QTY
1	5J1357	SEAL	7
2	3322-A	BOLT	1
3	3B4508	LOCKWASHER	6
4	2B947	BOLT	3
5	5J3561	TUBE ASSEM. (16" long overall-Hydraulic Tank to 5J3599 Tube Assem.)	1
6	5J3560	TUBE ASSEM. (17" long overall-Hydraulic Tank to 5J3601 Tube Assem.)	1

REF NO	PART NUMBER	DESCRIPTION	QTY
7	T-319	BOLT	12
8	3B4507	LOCKWASHER	20
9	5J3601	TUBE ASSEM. (67" long overall-5J3560 Tube Assem. to 5J7197 Block)	1
10	5J3599	TUBE ASSEM. (63" long overall-5J3561 Tube Assem. to 5J7197 Block)	1
11	S-1595	BOLT	2
12	4B4280	WASHER	2

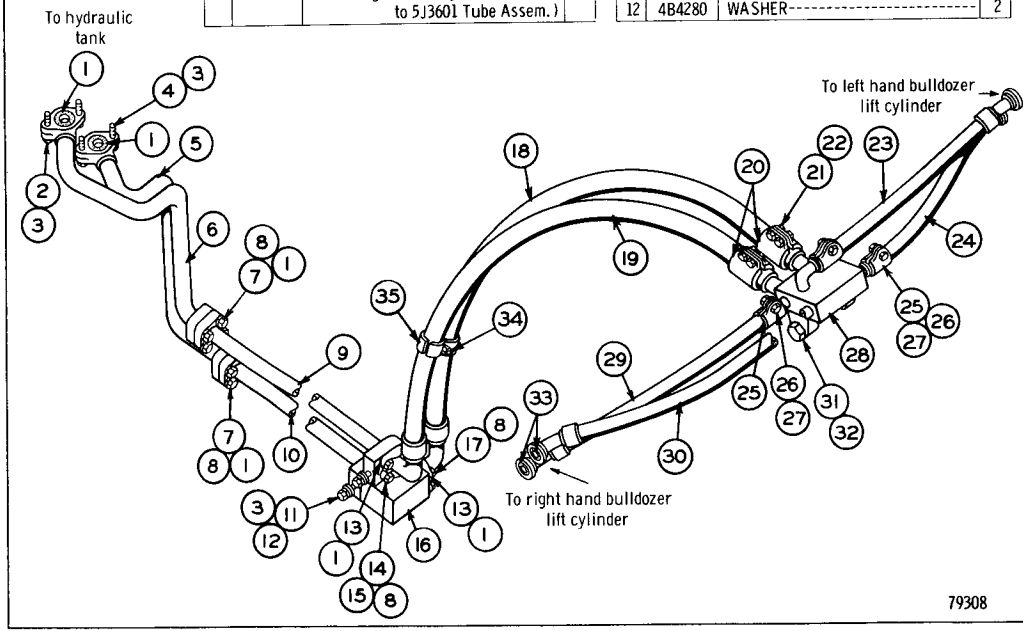

REF NO	PART NUMBER	DESCRIPTION	QTY
13	3H3667	FLANGE	4
14	1D4703	BOLT	4
15	1D4718	NUT	4
16	5J7197	BLOCK	1
17	3H5368	BOLT	4
	5J7204	HOSE ASSEM.	1
		Consisting of:	
18	5J7199	HOSE ASSEM. (62.80" long overall - 5J7197 Block to 5J7122 Connection)	1
19	5J7198	HOSE ASSEM. (59.50" long overall - 5J7197 Block to 5J7122 Connection)	1
20	8M1633	CLAMP	4
21	1D4703	BOLT	8
22	1D4718	NUT	8
23	5J7201	HOSE ASSEM. (29.50" long overall-5J7122 Connection to L. H. Bullcozer Lift Cyl.)	1
24	5J7202	HOSE ASSEM. (28.20" long overall-5J7122 Connection to L. H. Bulldozer Lift Cyl.)	1
25	8M1631	CLAMP	8
26	S-1571	BOLT	8
27	1D4717	NUT	8
28	5J7122	CONNECTION	1
29	5J7203	HOSE ASSEM. (25.70" long overall-5J7122 Connection to R. H. Bulldozer Lift Cyl.)	1
30	5J7200	HOSE ASSEM. (26.20" long overall-5J7122 Connection to R. H. Bulldozer Lift Cyl.)	1
31	1D4593	BOLT	1
32	1D5118	NUT-(Jam)	1
33	5J1584	SEAL	4
	L-1351	BOLT	1
34	1D4717	NUT	1
	3B4506	LOCKWASHER	1
35	5J8031	CLAMP	2

ONLY "CATERPILLAR" PARTS GIVE "CATERPILLAR" PERFORMANCE

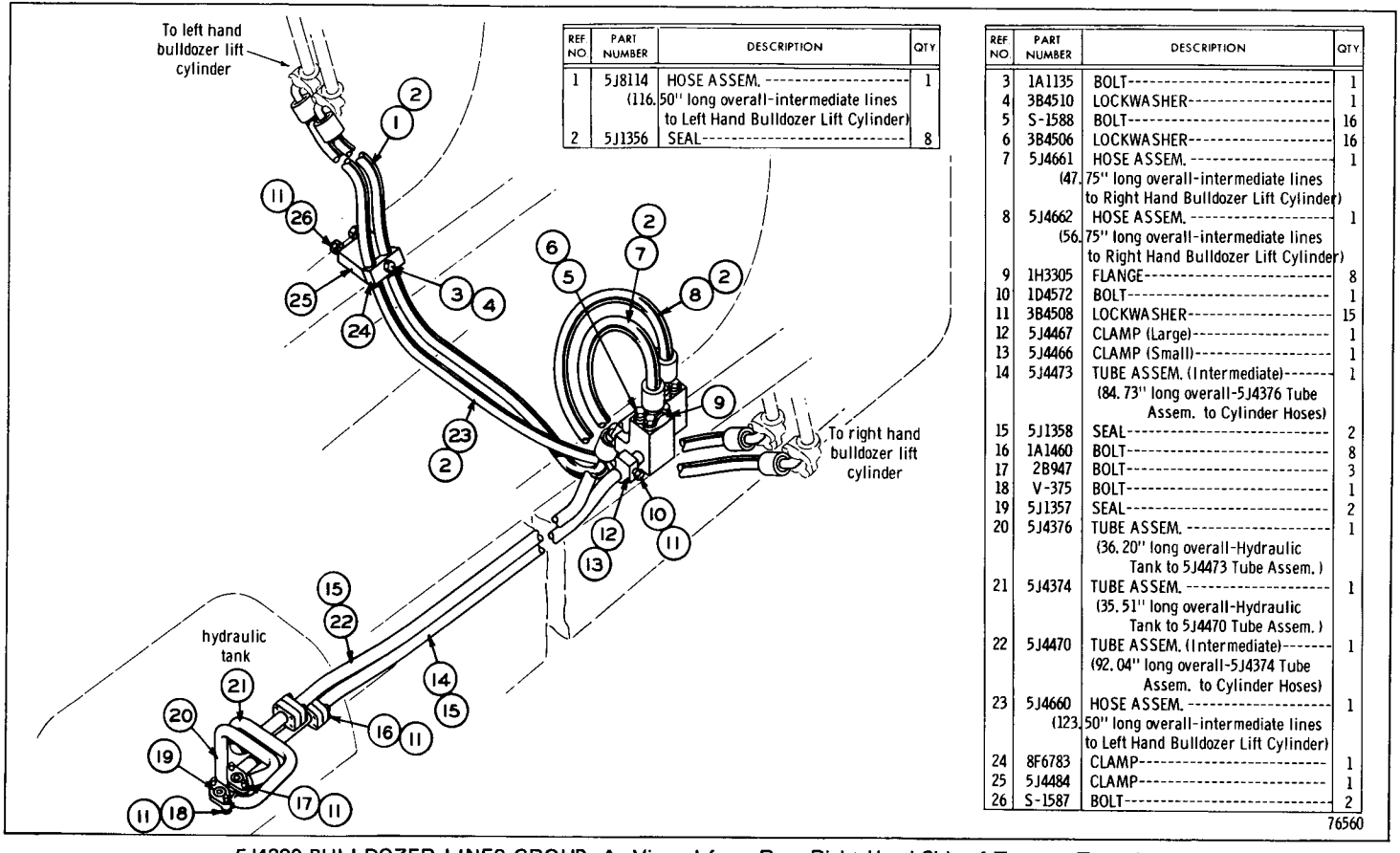

REF NO.	PART NUMBER	DESCRIPTION	QTY
1	5J8114	HOSE ASSEM. (116.50" long overall-intermediate lines to Left Hand Bulldozer Lift Cylinder)	1
2	5J1356	SEAL	8

REF NO.	PART NUMBER	DESCRIPTION	QTY
3	1A1135	BOLT	1
4	3B4510	LOCKWASHER	1
5	S-1588	BOLT	16
6	3B4506	LOCKWASHER	16
7	5J4661	HOSE ASSEM. (47.75" long overall-intermediate lines to Right Hand Bulldozer Lift Cylinder)	1
8	5J4662	HOSE ASSEM. (56.75" long overall-intermediate lines to Right Hand Bulldozer Lift Cylinder)	1
9	1H3305	FLANGE	8
10	1D4572	BOLT	1
11	3B4508	LOCKWASHER	15
12	5J4467	CLAMP (Large)	1
13	5J4466	CLAMP (Small)	1
14	5J4473	TUBE ASSEM. (Intermediate) (84.73" long overall-5J4376 Tube Assem. to Cylinder Hoses)	1
15	5J1358	SEAL	2
16	1A1460	BOLT	8
17	2B947	BOLT	3
18	V-375	BOLT	1
19	5J1357	SEAL	2
20	5J4376	TUBE ASSEM. (36.20" long overall-Hydraulic Tank to 5J4473 Tube Assem.)	1
21	5J4374	TUBE ASSEM. (35.51" long overall-Hydraulic Tank to 5J4470 Tube Assem.)	1
22	5J4470	TUBE ASSEM. (Intermediate) (92.04" long overall-5J4374 Tube Assem. to Cylinder Hoses)	1
23	5J4660	HOSE ASSEM. (123.50" long overall-intermediate lines to Left Hand Bulldozer Lift Cylinder)	1
24	8F6783	CLAMP	1
25	5J4484	CLAMP	1
26	S-1587	BOLT	2

76560

5J4390 BULLDOZER LINES GROUP—As Viewed from Rear Right Hand Side of Tractor—Type 1

5J4390 BULLDOZER LINES GROUP—As Viewed from Rear Right Hand Side of Tractor—Type 2

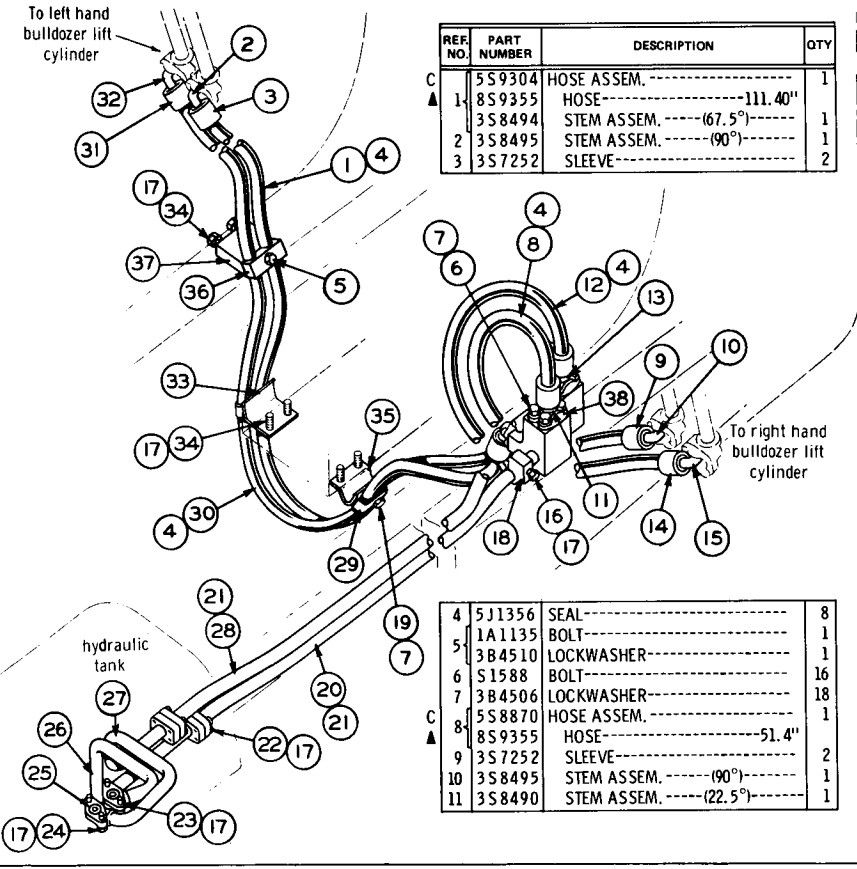

REF. NO.	PART NUMBER	DESCRIPTION	QTY
C ▲ 1	5S9304	HOSE ASSEM.	1
	8S9355	HOSE—111.40"	
	3S8494	STEM ASSEM. —(67.5°)—	1
2	3S8495	STEM ASSEM. —(90°)—	1
3	3S7252	SLEEVE	2

4	5J1356	SEAL	8
5	1A1135	BOLT	1
	3B4510	LOCKWASHER	1
6	S1588	BOLT	16
7	3B4506	LOCKWASHER	18
C ▲ 8	5S8870	HOSE ASSEM.	1
	8S9355	HOSE—51.4"	
9	3S7252	SLEEVE	2
10	3S8495	STEM ASSEM. —(90°)—	1
11	3S8490	STEM ASSEM. —(22.5°)—	1

C ▲ 12	5S8871	HOSE ASSEM.	1
	8S9355	HOSE—42.4"	
13	3S8490	STEM ASSEM. —(22.5°)—	1
14	3S7252	SLEEVE	2
15	3S8495	STEM ASSEM. —(90°)—	1
	1A168	BOLT	1
C 16	1D4719	NUT	1
	4B4280	WASHER	1
17	3B4508	LOCKWASHER	19
18	5J4467	CLAMP—(Large)—	1
	5J4466	CLAMP—(Small)—	1
	L1351	BOLT	2
C 19	4B4278	WASHER	2
20	5J4473	TUBE ASSEM. —(84.73" long overall)—	1
21	5J1358	SEAL	2
22	1A1460	BOLT	8
23	2B947	BOLT	3
C 24	9S1366	BOLT	1
25	5J1357	SEAL	2
26	5J4376	TUBE ASSEM. —(36.20" long overall)	1
27	5J4374	TUBE ASSEM. —(35.51" long overall)	1
28	5J4470	TUBE ASSEM. —(92.04" long overall)	1
29	5S6479	CLAMP	2
C ▲ 30	5S8872	HOSE ASSEM.	1
	8S9355	HOSE—118.4"	
	3S8494	STEM ASSEM. —(67.5°)—	1
31	3S7252	SLEEVE	2
32	3S8495	STEM ASSEM. —(90°)—	1
33	5S6498	BRACKET ASSEM. —(Left Hand)—	1
34	S1587	BOLT	6
35	5S6497	BRACKET ASSEM. —(Right Hand)—	1
36	8F6783	CLAMP	1
37	5J4484	CLAMP	1
38	1H3305	FLANGE	8

C INDICATES CHANGE
▲ ORDER BY THE INCH

138678

ONLY "CATERPILLAR" PARTS GIVE "CATERPILLAR" PERFORMANCE

5J4390 BULLDOZER LINES GROUP—As Viewed from Rear Right Hand Side of Tractor—Type 3

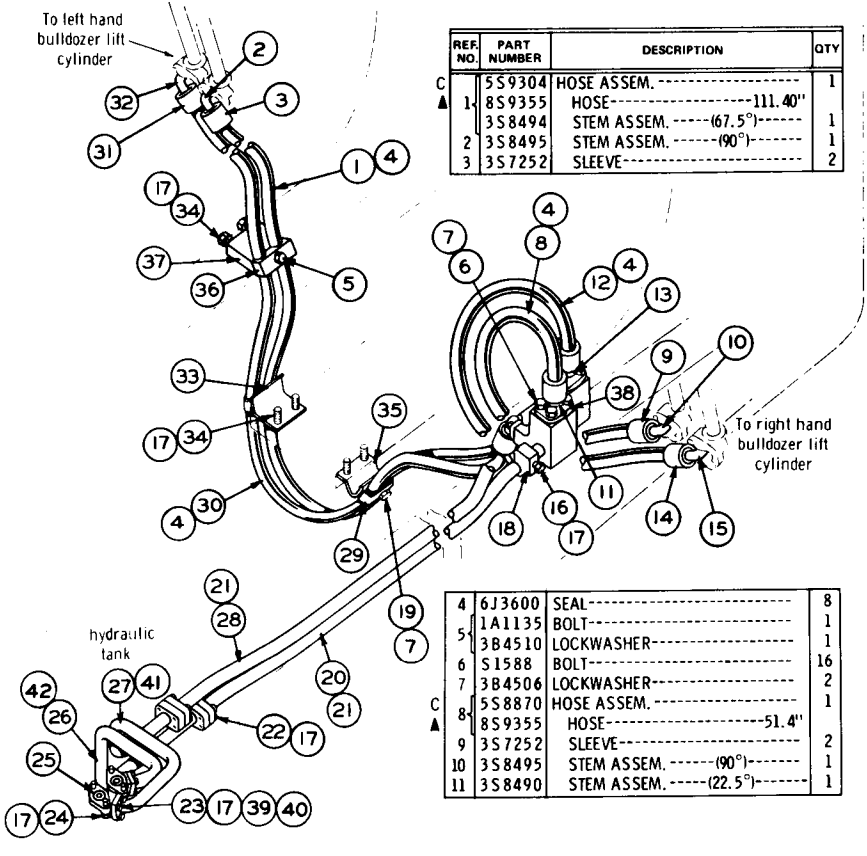

REF. NO.	PART NUMBER	DESCRIPTION	QTY
C ▲ 1	5S9304	HOSE ASSEM.	1
	8S9355	HOSE--111.40"	
	3S8494	STEM ASSEM. --(67.5°)--	1
2	3S8495	STEM ASSEM. --(90°)--	1
3	3S7252	SLEEVE	2
4	6J3600	SEAL	8
5	1A1135	BOLT	1
	3B4510	LOCKWASHER	1
6	S1588	BOLT	16
7	3B4506	LOCKWASHER	2
C ▲ 8	5S8870	HOSE ASSEM.	1
	8S9355	HOSE--51.4"	
9	3S7252	SLEEVE	2
10	3S8495	STEM ASSEM. --(90°)--	1
11	3S8490	STEM ASSEM. --(22.5°)--	1
C ▲ 12	5S8871	HOSE ASSEM.	1
	8S9355	HOSE--42.4"	
13	3S8490	STEM ASSEM. --(22.5°)--	1
14	3S7252	SLEEVE	2
15	3S8495	STEM ASSEM. --(90°)--	1
	1A168	BOLT	1
C 16	1D4719	NUT	1
	4B4280	WASHER	1
17	3B4508	LOCKWASHER	19
18	5J4467	CLAMP--(Large)--	1
	5J4466	CLAMP--(Small)--	1
	L1351	BOLT	2
C 19	4B4278	WASHER	2
20	5J4473	TUBE ASSEM. -(84.73" long overall)-	1
21	6J3650	SEAL	2
22	1A1460	BOLT	8
23	T768	BOLT	8
C 24	2B947	BOLT	4
25	4J522	SEAL	2
C 26	2P7256	TUBE ASSEM. -(36.20" long overall)	1
C 27	2P7254	TUBE ASSEM. -(35.51" long overall)	1
28	5J4470	TUBE ASSEM. -(92.04" long overall)	1
29	5S6479	CLAMP	2
C ▲ 30	5S8872	HOSE ASSEM.	1
	8S9355	HOSE--118.4"	
	3S8494	STEM ASSEM. --(67.5°)--	1
31	3S7252	SLEEVE	2
32	3S8495	STEM ASSEM. --(90°)--	1
33	5S6498	BRACKET ASSEM. ---(Left Hand)---	1
34	S1587	BOLT	6
35	5S6497	BRACKET ASSEM. --(Right Hand)--	1
36	8F6783	CLAMP	1
37	5J4484	CLAMP	1
38	1P4577	FLANGE	8
39	4J523	SEAL	2
40	3B4507	LOCKWASHER	8
41	3R2447	ELBOW	1
42	2P7196	ELBOW	1

C INDICATES CHANGE
▲ ORDER BY THE INCH

138679

REF. NO.	PART NUMBER	DESCRIPTION	QTY
1	2B947	BOLT	4
2	3B4508	LOCKWASHER	10
3	3R2447	ELBOW	1
4	2P7256	TUBE ASSEM.	1
5	2P7254	TUBE ASSEM.	1
6	2P4015	HOSE ASSEM.	2
▲	5P182	HOSE--------256.54 cm(101 in.)	
7	1P7931	STEM ASSEM.	1
8	3S7116	SLEEVE	2
9	3S8567	STEM ASSEM.	1

10	4J524	SEAL	2
11	4J522	SEAL	4
12	2P7507	CLIP	6
13	2P7506	CLIP	6
14	1P4578	FLANGE	4
15	T772	BOLT	8
16	S1585	BOLT	12
17	1D4719	NUT	6
18	1M4991	WASHER	2
19	6H1717	BOLT	2
20	1P4579	FLANGE	4
21	T768	BOLT	8

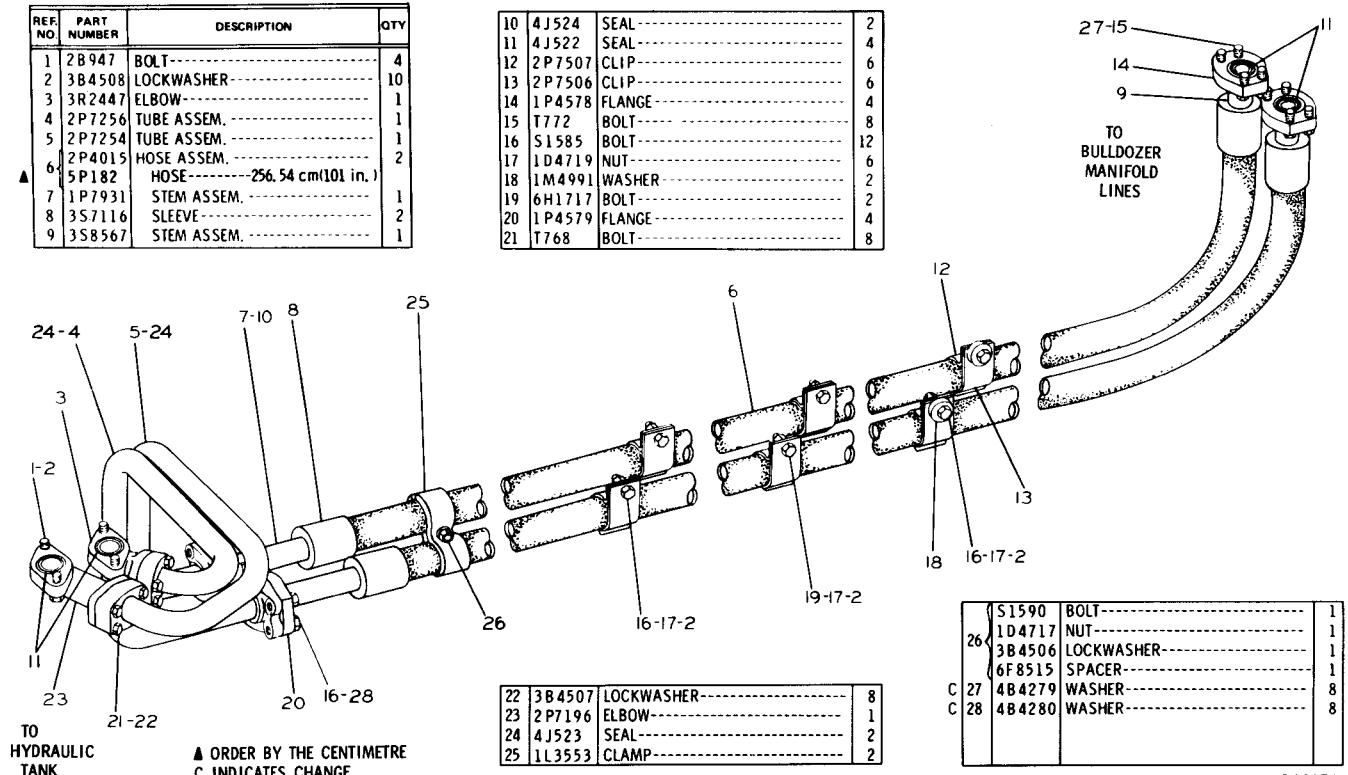

	26	S1590	BOLT	1
		1D4717	NUT	1
		3B4506	LOCKWASHER	1
		6F8515	SPACER	1
C	27	4B4279	WASHER	8
C	28	4B4280	WASHER	8

22	3B4507	LOCKWASHER	8
23	2P7196	ELBOW	1
24	4J523	SEAL	2
25	1L3553	CLAMP	2

▲ ORDER BY THE CENTIMETRE
C INDICATES CHANGE

168279

2P3400 BULLDOZER LINES GROUP—Type 1

2P3400 BULLDOZER LINES GROUP—Type 2

REF. NO.	PART NUMBER	DESCRIPTION	QTY
1	2B947	BOLT	4
2	3B4508	LOCKWASHER	10
3	3R2447	ELBOW	1
C 4	9P141	TUBE ASSEM.	1
C 5	9P140	TUBE ASSEM.	1
▲ 6	2P4015	HOSE ASSEM.	2
	5P182	HOSE---256.54 cm(101 in.)	
7	1P7931	STEM ASSEM.	1
8	3S7116	SLEEVE	2
9	3S8567	STEM ASSEM.	1
10	4J524	SEAL	2
11	4J522	SEAL	4
12	2P7507	CLIP	6
13	2P7506	CLIP	6
14	1P4578	FLANGE	4
15	T772	BOLT	8
16	S1585	BOLT	12
17	1D4719	NUT	6
18	1M4991	WASHER	2
19	6H1717	BOLT	2
20	1P4579	FLANGE	4
21	T768	BOLT	8

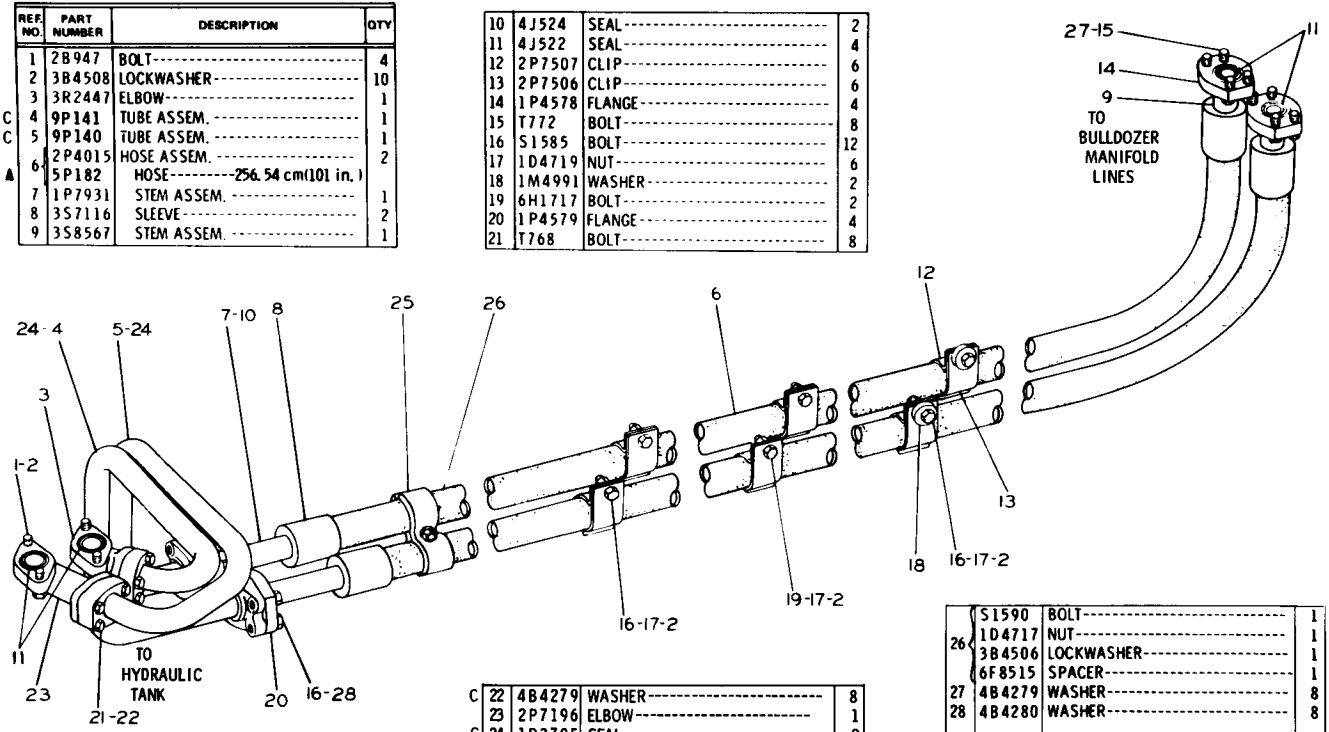

C	22	4B4279 WASHER	8
	23	2P7196 ELBOW	1
C	24	1P3705 SEAL	2
	25	1L3553 CLAMP	2

26	S1590	BOLT	1
	1D4717	NUT	1
	3B4506	LOCKWASHER	1
	6F8515	SPACER	1
27	4B4279	WASHER	8
28	4B4280	WASHER	8

▲ ORDER BY THE CENTIMETRE
C INDICATES CHANGE

168895

5J3134 BULLDOZER LINES GROUP—As Viewed from Front Right Hand Side of Tractor

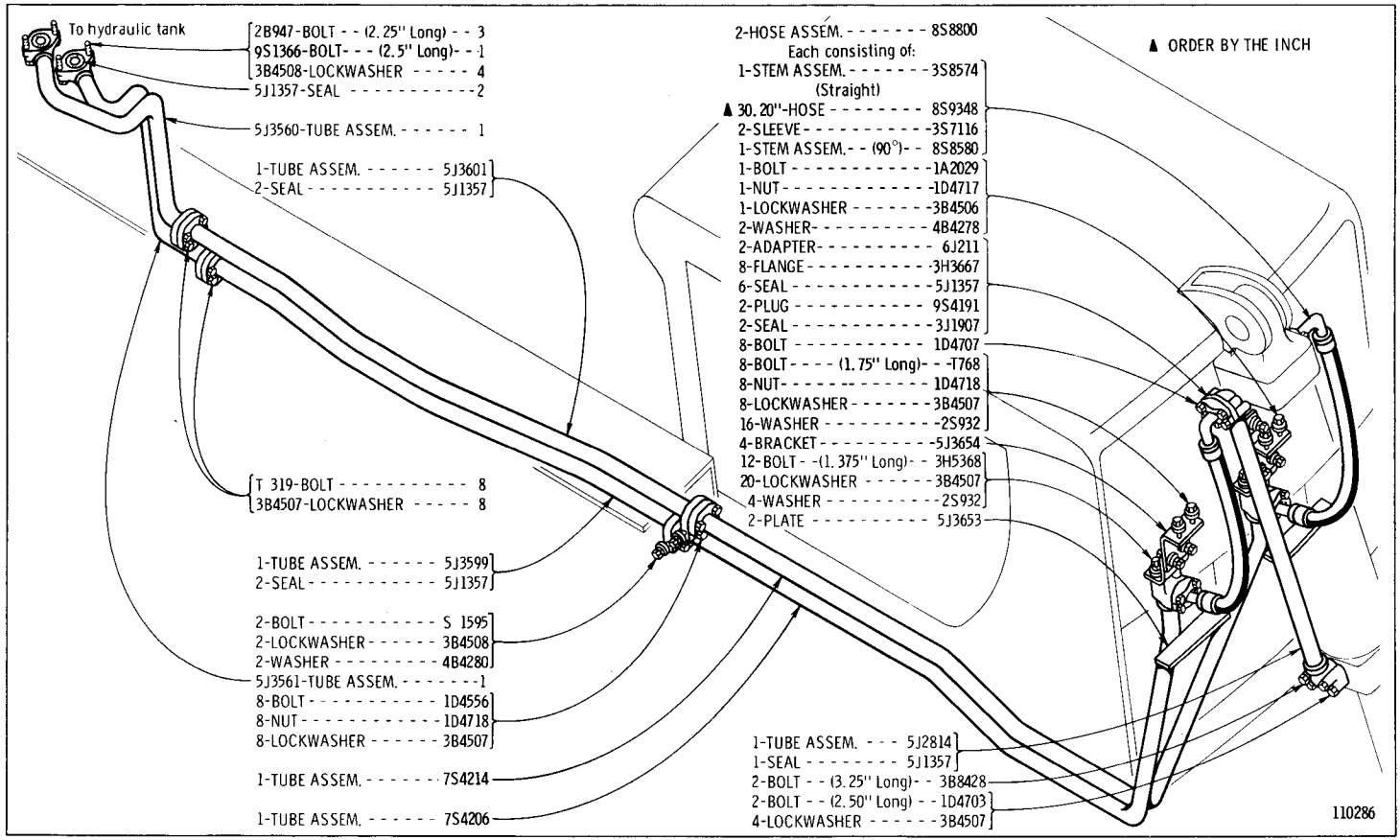

ONLY "CATERPILLAR" PARTS GIVE "CATERPILLAR" PERFORMANCE

5J3134 BULLDOZER LINES GROUP—As Viewed from Right Hand Side of Machine—Type 2

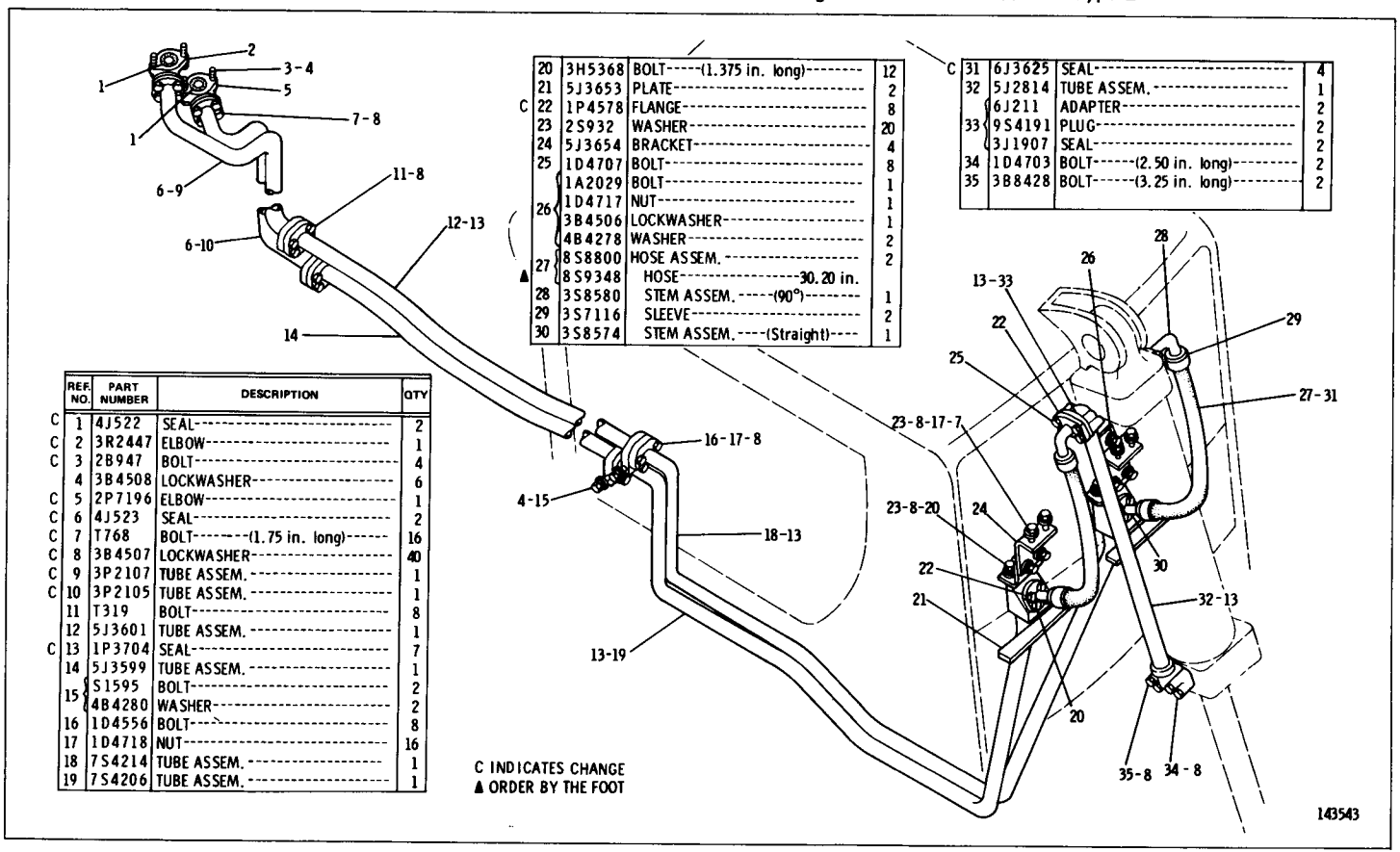

	REF. NO.	PART NUMBER	DESCRIPTION	QTY
C	1	4J522	SEAL	2
C	2	3R2447	ELBOW	1
C	3	2B947	BOLT	4
	4	3B4508	LOCKWASHER	6
C	5	2P7196	ELBOW	1
C	6	4J523	SEAL	2
C	7	T768	BOLT—(1.75 in. long)	16
C	8	3B4507	LOCKWASHER	40
C	9	3P2107	TUBE ASSEM.	1
C	10	3P2105	TUBE ASSEM.	1
	11	T319	BOLT	8
	12	5J3601	TUBE ASSEM.	1
C	13	1P3704	SEAL	7
	14	5J3599	TUBE ASSEM.	1
	15	1S1595	BOLT	2
		4B4280	WASHER	2
	16	1D4556	BOLT	8
	17	1D4718	NUT	16
	18	7S4214	TUBE ASSEM.	1
	19	7S4206	TUBE ASSEM.	1
	20	3H5368	BOLT—(1.375 in. long)	12
	21	5J3653	PLATE	2
C	22	1P4578	FLANGE	8
	23	2S932	WASHER	20
	24	5J3654	BRACKET	4
	25	1D4707	BOLT	8
	26	1A2029	BOLT	1
		1D4717	NUT	1
		3B4506	LOCKWASHER	1
		4B4278	WASHER	2
	27	8S8800	HOSE ASSEM.	2
▲		8S9348	HOSE—30.20 in.	
	28	3S8580	STEM ASSEM.—(90°)	1
	29	3S7116	SLEEVE	2
	30	3S8574	STEM ASSEM.—(Straight)	1
C	31	6J3625	SEAL	4
	32	5J2814	TUBE ASSEM.	1
	33	6J211	ADAPTER	2
		9S4191	PLUG	2
		3J1907	SEAL	2
	34	1D4703	BOLT—(2.50 in. long)	2
	35	3B8428	BOLT—(3.25 in. long)	2

C INDICATES CHANGE
▲ ORDER BY THE FOOT

REF NO	PART NUMBER	DESCRIPTION	QTY
1	1D4703	BOLT (2.50" Long)	4
2	3B4507	LOCKWASHER	24
3	3B8428	BOLT (3.25" Long)	4
4	5J3126	TUBE ASSEM. (11.11" Long Overall-5J4459 Hose Assem. to Cylinder Group Head End)	1
5	9M6670	CLIP (Part of Tube Assem. 5J3126)	1
6	S-1595	BOLT	1
7	1D4719	NUT	2
8	3B4508	LOCKWASHER	27
9	4B4280	WASHER	4
10	5J1357	SEAL	8
11	5J3120	TUBE ASSEM. (47.30" Long Overall-5J4459 Hose Assem. to Rod End of Cyl. Group)	1
12	7B3235	BOLT	5
13	5J4459	HOSE ASSEM. (42.50" Long Overall - Tube Assemblies 5J3126 & 5J3120 to Tube Assemblies 5J4456 & 5J4458)	2
14	3H3667	FLANGE	8
15	5J4456	TUBE ASSEM. (66.20" Long Overall-5J4459 Hose Assem. to 5J4476 Tube Assem.)	1

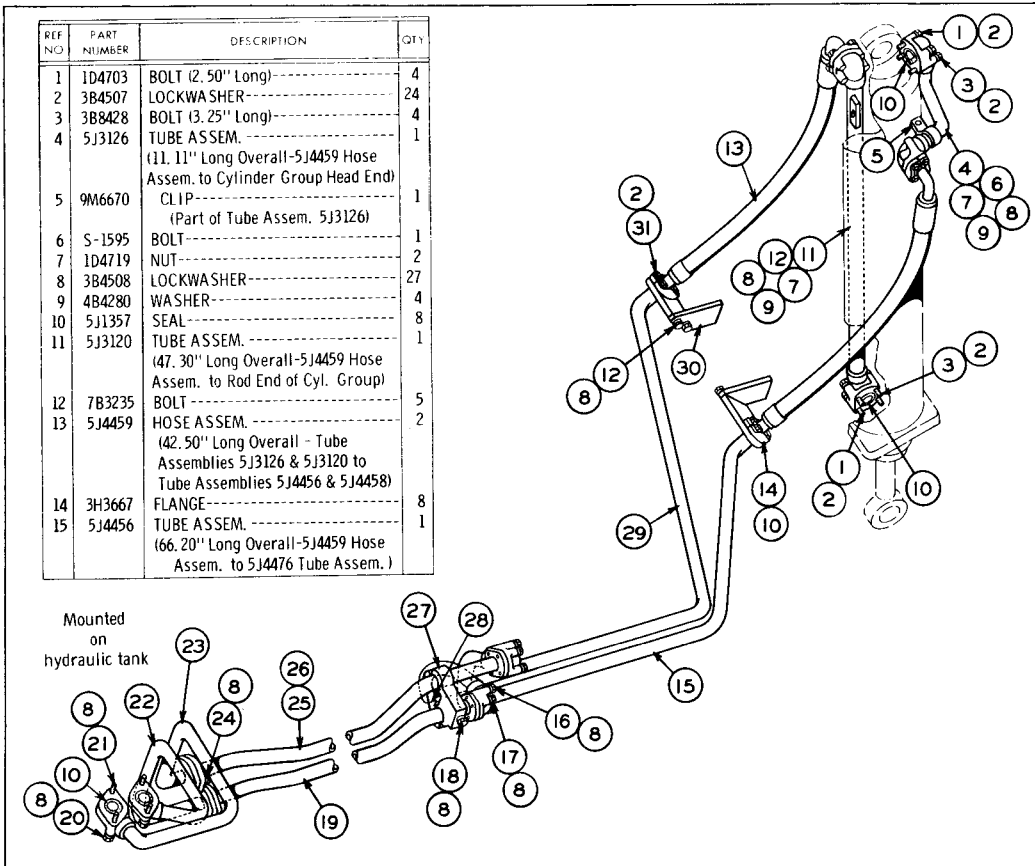

REF NO	PART NUMBER	DESCRIPTION	QTY
16	1D4566	BOLT	4
17	3322-A	BOLT	4
18	1D4572	BOLT	1
19	5J4476	TUBE ASSEM. (83.23" Long Overall-5J4456 Tube Assem. to 5J4376 Tube Assem.)	1
20	V-375	BOLT	1
21	2B947	BOLT	3
22	5J4376	TUBE ASSEM. (34.95" Long Overall-5J4476 Tube Assem. to Hydraulic Tank)	1
23	5J4374	TUBE ASSEM. (34.23" Long Overall-5J4477 Tube Assem. to Hydraulic Tank)	1
24	1A1460	BOLT	8
25	5J4477	TUBE ASSEM. (90.48" Long Overall-5J4458 Tube Assem. to 5J4374 Tube Assem.)	1
26	5J1358	SEAL	4
27	5J4467	CLAMP	1
28	5J4466	CLAMP	1
29	5J4458	TUBE ASSEM. (82.46" Long Overall-5J4459 Hose Assem. to 5J4476 Tube Assem.)	1
30	5J4461	PLATE	2
31	T-772	BOLT	16

76736

5J4394 BULLDOZER LINES GROUP—As Viewed from Rear Right Hand Side of Tractor—Type 1

5J4394 BULLDOZER LINES GROUP—As Viewed from Rear Right Hand Side of Tractor—Type 2

REF. NO.	PART NUMBER	DESCRIPTION	QTY
1	1D4703	BOLT--------(2.50 in. long)-------	4
C 2	3B4507	LOCKWASHER----------	8
3	3B8428	BOLT--------(3.25 in. long)-------	4
4	5J3126	TUBE ASSEM. ----------	1
5	9M6670	CLIP----------	1
6	S1595	BOLT----------	1
C 7	1D4719	NUT----------	3
8	3B4508	LOCKWASHER----------	27
C 9	4B4280	WASHER----------	5
C 10	6J3625	SEAL----------	8
11	5J3120	TUBE ASSEM. ----------	1
12	7B3235	BOLT----------	5
13	6J211	ADAPTER----------	2
C 14	1P4578	FLANGE----------	8
15	5J4456	TUBE ASSEM. ----------	1
16	1D4566	BOLT----------	4
C 17	9S1366	BOLT----------	4
C 18	1A168	BOLT----------	1
19	5J4476	TUBE ASSEM. ----------	1
C 20	2B947	BOLT----------	4
C 21	2P7256	TUBE ASSEM. ----------	1
C 22	2P7254	TUBE ASSEM. ----------	1
23	1A1460	BOLT----------	8
24	5J4477	TUBE ASSEM. ----------	1
C 25	6J3650	SEAL----------	4
26	5J4467	CLAMP----------	1
27	5J4466	CLAMP----------	1
28	5J4458	TUBE ASSEM. ----------	1
29	5J4461	PLATE----------	2
30	T772	BOLT----------	8
31	1D4707	BOLT----------	8
C 32	9S4191	PLUG----------	2
C	3J1907	SEAL----------	2
C	8S8247	HOSE ASSEM. ----------	2
▲ 33	8S9348	HOSE----------37.2 in.	
	3S8574	STEM ASSEM. -----(Straight)---	1
34	3S8580	STEM ASSEM. -------(90°)------	1
35	3S7116	SLEEVE----------	2
C 36	4J522	SEAL----------	2
C 37	3R2447	ELBOW----------	1
	4J523	SEAL----------	1
C 38	2P7196	ELBOW----------	1
	4J523	SEAL----------	1
C 39	T768	BOLT----------	8
	3B4507	LOCKWASHER----------	8

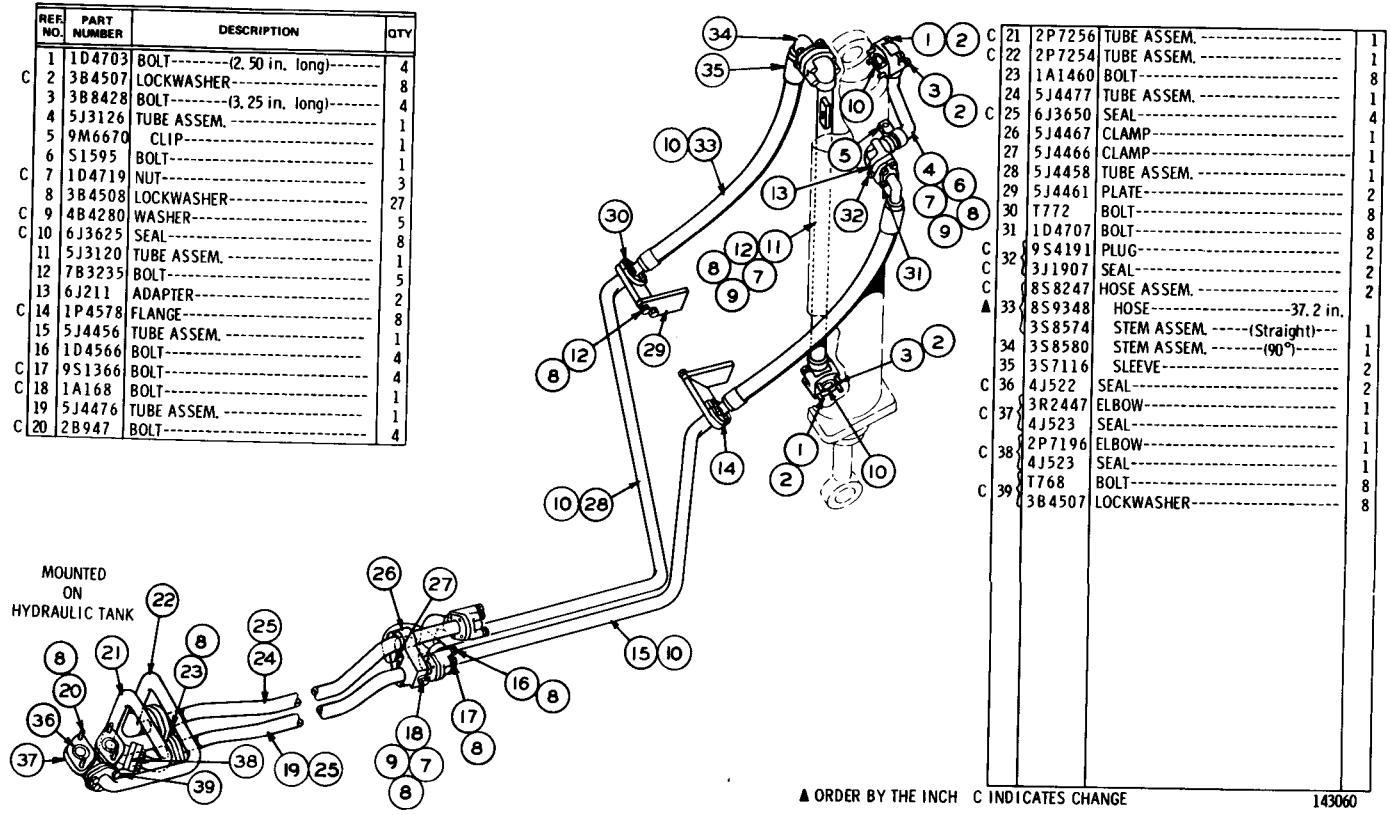

▲ ORDER BY THE INCH C INDICATES CHANGE 143060

ONLY "CATERPILLAR" PARTS GIVE "CATERPILLAR" PERFORMANCE

5J4394 BULLDOZER LINES GROUP—As Viewed from Rear Right Hand Side of Tractor—Type 3

REF. NO.	PART NUMBER	DESCRIPTION	QTY
1	1D4703	BOLT---------63 mm(2.50 in.) long	4
2	3B4507	LOCKWASHER----------	8
3	3B8428	BOLT---------82 mm(3.25 in.) long	4
4	5J3126	TUBE ASSEM. ----------	1
5	9M6670	CLIP----------	1
6	S1595	BOLT----------	1
7	1D4719	NUT----------	3
8	3B4508	LOCKWASHER----------	27
9	4B4280	WASHER----------	5
10	6J3625	SEAL----------	8
11	5J3120	TUBE ASSEM. ----------	1
12	7B3235	BOLT----------	5
13	6J211	ADAPTER----------	2
14	1P4578	FLANGE----------	8
15	5J4456	TUBE ASSEM. ----------	1
16	1D4566	BOLT----------	4
17	9S1366	BOLT----------	4
18	1A168	BOLT----------	1
19	5J4476	TUBE ASSEM. ----------	1
20	2B947	BOLT----------	4

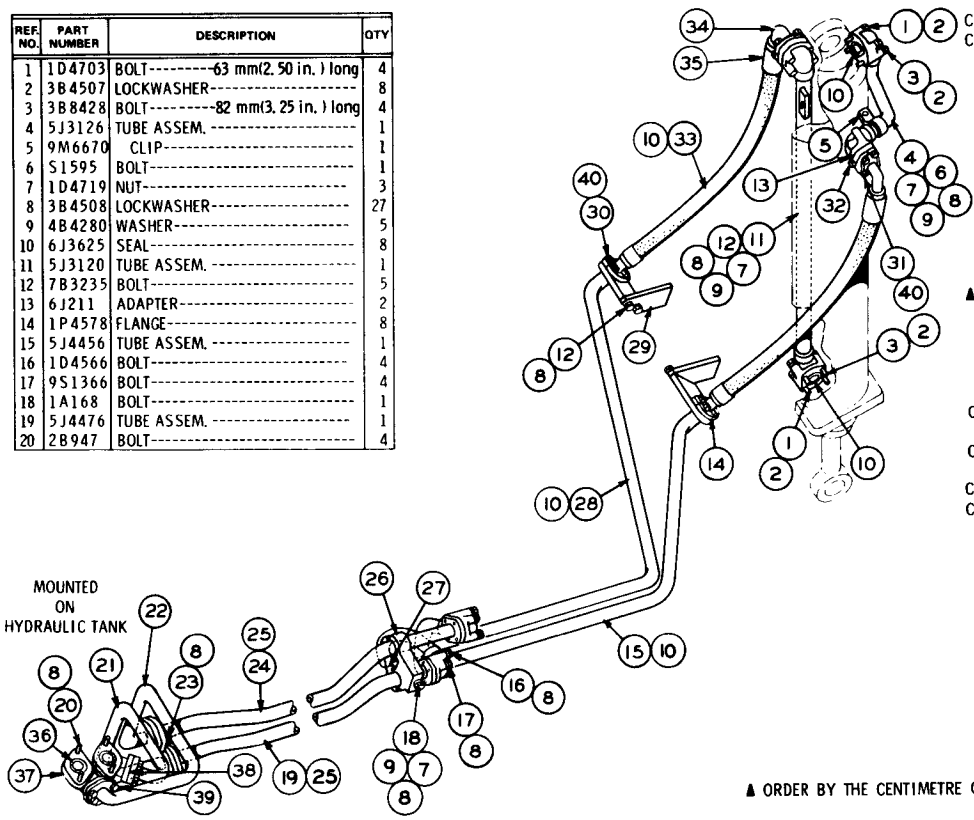

C	21	9P141	TUBE ASSEM. ----------	1
C	22	9P140	TUBE ASSEM. ----------	1
	23	1A1460	BOLT----------	8
	24	5J4477	TUBE ASSEM. ----------	1
	25	6J3650	SEAL----------	4
	26	5J4467	CLAMP----------	1
	27	5J4466	CLAMP----------	1
	28	5J4458	TUBE ASSEM. ----------	1
	29	5J4461	PLATE----------	2
	30	T772	BOLT----------	8
	31	1D4707	BOLT----------	8
	32	9S4191	PLUG----------	2
		3J1907	SEAL----------	2
		8S8247	HOSE ASSEM. ----------	2
▲	33	8S9348	HOSE----------94.5 cm(37.2 in.)	
		3S8574	STEM ASSEM. -----(Straight)---	1
	34	3S8580	STEM ASSEM. -------(90°)------	1
	35	3S7116	SLEEVE----------	2
	36	4J522	SEAL----------	2
	37	3R2447	ELBOW----------	1
C		1P3705	SEAL----------	1
	38	2P7196	ELBOW----------	1
C		1P3705	SEAL----------	1
	39	T768	BOLT----------	8
C		4B4279	WASHER----------	8
C	40	4B4279	WASHER----------	16

▲ ORDER BY THE CENTIMETRE C INDICATES CHANGE

168335

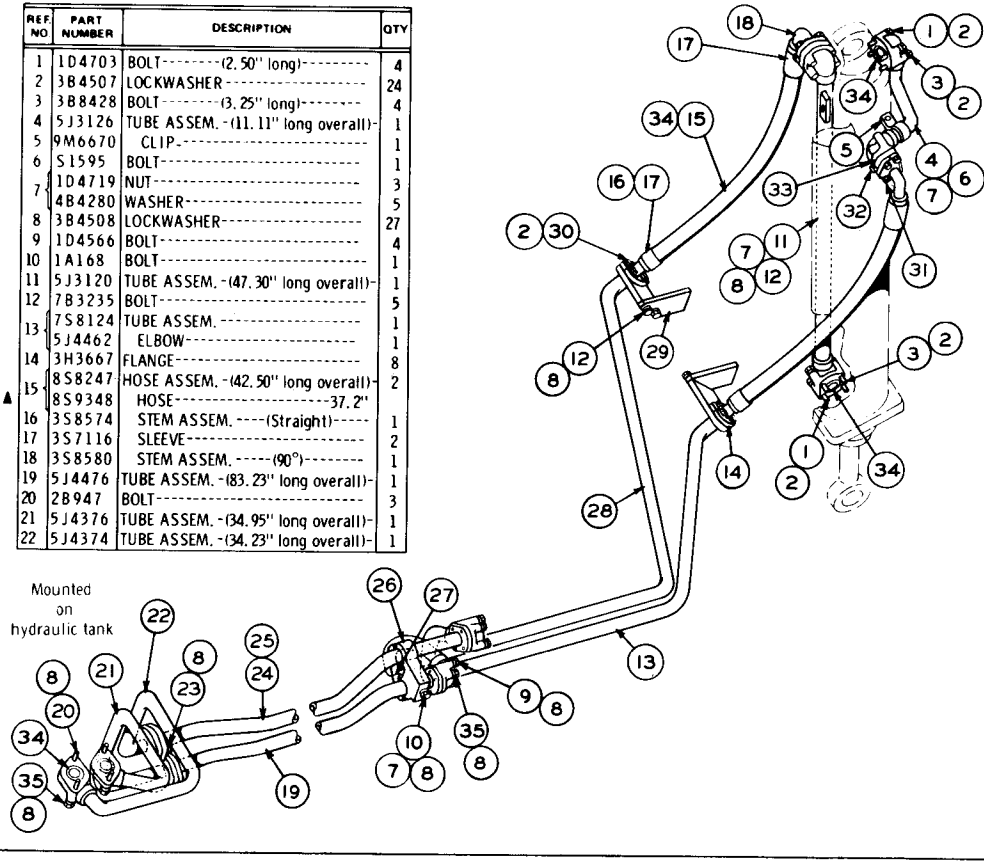

REF. NO	PART NUMBER	DESCRIPTION	QTY
1	1D4703	BOLT--------(2.50" long)---------	4
2	3B4507	LOCKWASHER----------	24
3	3B8428	BOLT--------(3.25" long)---------	4
4	5J3126	TUBE ASSEM. -(11.11" long overall)-	1
5	9M6670	CLIP----------	1
6	S1595	BOLT----------	1
7	1D4719	NUT----------	3
	4B4280	WASHER----------	5
8	3B4508	LOCKWASHER----------	27
9	1D4566	BOLT----------	4
10	1A168	BOLT----------	1
11	5J3120	TUBE ASSEM. -(47.30" long overall)-	1
12	7B3235	BOLT----------	5
13	7S8124	TUBE ASSEM. ----------	1
	5J4462	ELBOW----------	1
14	3H3667	FLANGE----------	8
15	8S8247	HOSE ASSEM. -(42.50" long overall)-	2
▲	8S9348	HOSE----------37.2"	
16	3S8574	STEM ASSEM. ----(Straight)-----	1
17	3S7116	SLEEVE----------	2
18	3S8580	STEM ASSEM. -----(90°)---------	1
19	5J4476	TUBE ASSEM. -(83.23" long overall)-	1
20	2B947	BOLT----------	3
21	5J4376	TUBE ASSEM. -(34.95" long overall)-	1
22	5J4374	TUBE ASSEM. -(34.23" long overall)-	1
23	1A1460	BOLT----------	8
24	5J4477	TUBE ASSEM. --(90.48" long overall)	1
25	6J3650	SEAL----------	4
26	5J4467	CLAMP----------	1
27	5J4466	CLAMP----------	1
28	7S8122	TUBE ASSEM. ----------	1
	5J4462	ELBOW----------	1
29	5J4461	PLATE----------	2
30	T772	BOLT----------	8
31	1D4707	BOLT----------	8
32	9S4191	PLUG----------	2
	3J1907	SEAL----------	2
33	6J211	ADAPTER----------	2
34	6J3625	SEAL----------	10
35	9S1366	BOLT----------	5

▲ ORDER BY THE INCH

116025

9S9440 BULLDOZER LINES GROUP—Type 1

9S9440 BULLDOZER LINES GROUP—Type 2

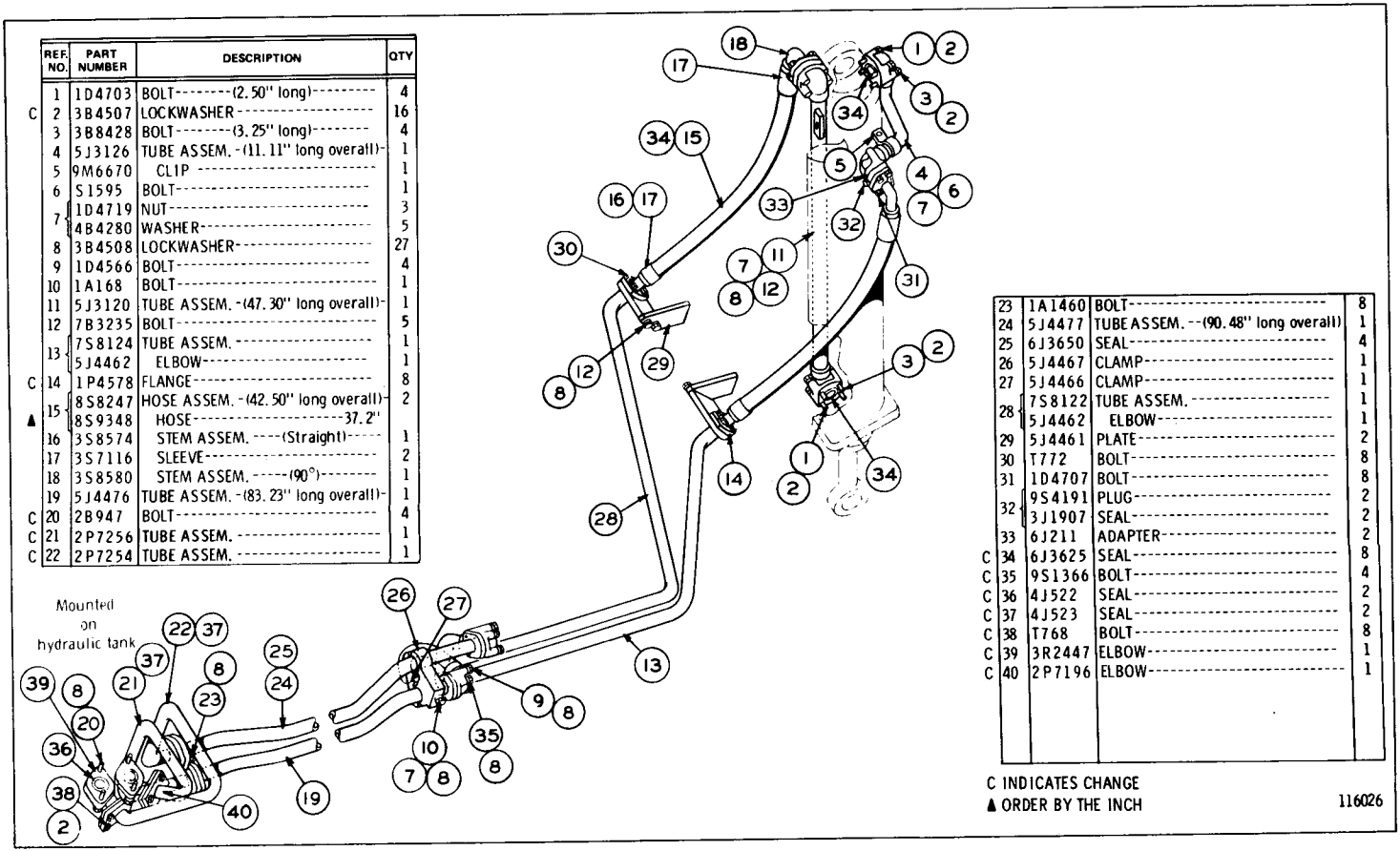

REF. NO.	PART NUMBER	DESCRIPTION	QTY
1	1D4703	BOLT--------(2.50" long)---------	4
C 2	3B4507	LOCKWASHER----------	16
3	3B8428	BOLT--------(3.25" long)--------	4
4	5J3126	TUBE ASSEM.-(11.11" long overall)-	1
5	9M6670	CLIP ----------	1
6	S1595	BOLT----------	1
7	1D4719	NUT----------	3
	4B4280	WASHER----------	5
8	3B4508	LOCKWASHER----------	27
9	1D4566	BOLT----------	4
10	1A168	BOLT----------	1
11	5J3120	TUBE ASSEM.-(47.30" long overall)-	1
12	7B3235	BOLT----------	5
13	7S8124	TUBE ASSEM. ----------	1
	5J4462	ELBOW----------	1
C 14	1P4578	FLANGE----------	8
15	8S8247	HOSE ASSEM.-(42.50" long overall)-	2
▲	8S9348	HOSE----------37.2"	
16	3S8574	STEM ASSEM. -----(Straight)-----	1
17	3S7116	SLEEVE----------	2
18	3S8580	STEM ASSEM. -----(90°)--------	1
19	5J4476	TUBE ASSEM.-(83.23" long overall)-	1
C 20	2B947	BOLT----------	4
C 21	2P7256	TUBE ASSEM. ----------	1
C 22	2P7254	TUBE ASSEM. ----------	1

23	1A1460	BOLT----------	8
24	5J4477	TUBE ASSEM.--(90.48" long overall)	1
25	6J3650	SEAL----------	4
26	5J4467	CLAMP----------	1
27	5J4466	CLAMP----------	1
28	7S8122	TUBE ASSEM. ----------	1
	5J4462	ELBOW----------	1
29	5J4461	PLATE----------	2
30	T772	BOLT----------	8
31	1D4707	BOLT----------	8
32	9S4191	PLUG----------	2
	3J1907	SEAL----------	2
33	6J211	ADAPTER----------	2
C 34	6J3625	SEAL----------	8
C 35	9S1366	BOLT----------	4
C 36	4J522	SEAL----------	2
C 37	4J523	SEAL----------	2
C 38	T768	BOLT----------	8
C 39	3R2447	ELBOW----------	1
C 40	2P7196	ELBOW----------	1

C INDICATES CHANGE
▲ ORDER BY THE INCH

116026

ONLY "CATERPILLAR" PARTS GIVE "CATERPILLAR" PERFORMANCE

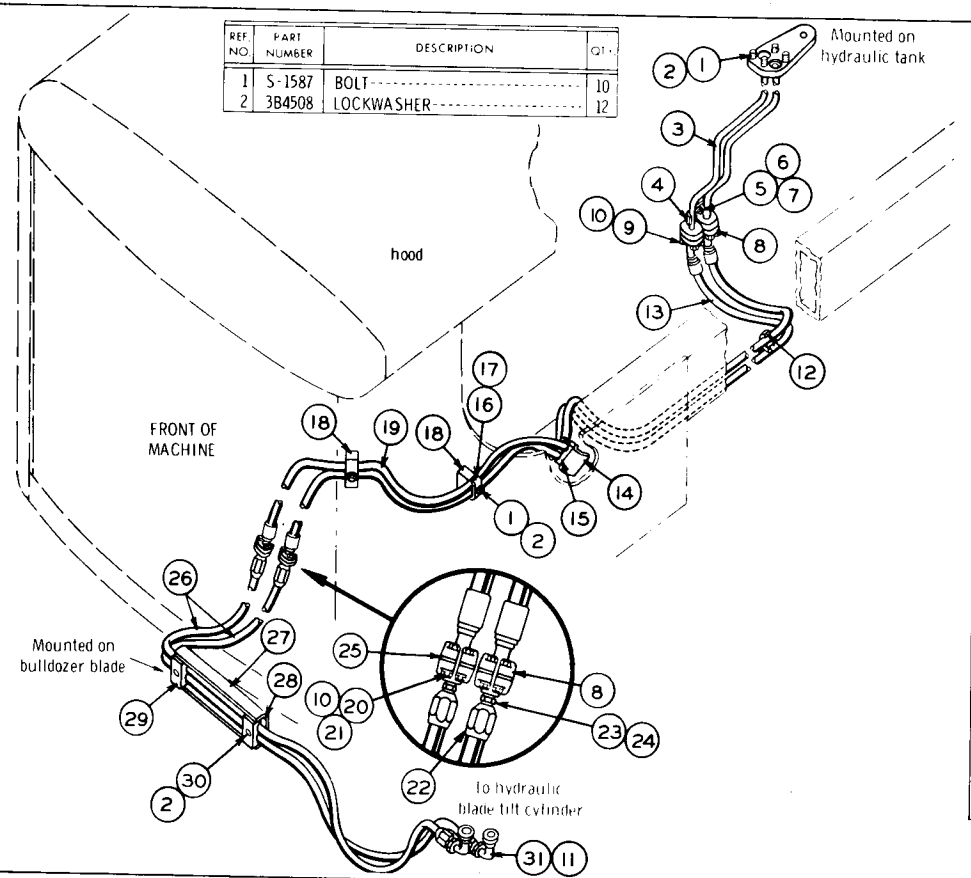

REF NO	PART NUMBER	DESCRIPTION	QTY
1	S-1587	BOLT	10
2	3B4508	LOCKWASHER	12

REF NO	PART NUMBER	DESCRIPTION	QTY
3	5J3596	TUBE ASSEM.	1
4	5J3688	CLAMP (Part of 5J3596 Tube Assem.)	1
5	S-1588	BOLT	1
6	3B4506	LOCKWASHER	1
7	T-431	WASHER	1
8	1H5278	FLANGE	12
9	1B2790	BOLT	8
10	3B4505	LOCKWASHER	16
11	8M4988	SEAL	2
12	2J7731	CLAMP	3
13	5J5964	HOSE ASSEM. -----(198" Long)----- (5J3596 Tube Assem. to 2J6138 Hose)	1
14	5J4958	BRACKET ASSEM.	1
15	1J7647	CLAMP (Part of 5J4958 Bracket Assem.)	1
16	1J7468	CLAMP	3
17	2J9900	SPACER	3
18	2J6294	CLAMP	2
19	5J5965	HOSE ASSEM. -----(201" Long)----- (5J3596 Tube Assem. to 2J6138 Hose)	1
20	1A9579	BOLT	8
21	1D4716	NUT	8
22	2J3339	SOCKET	4
23	2J6144	STEM	2
24	8M4435	SEAL	2
25	3H6274	PLATE	2
26	2J6138	HOSE----------(104" Long)-------- (5J5964 & 5J5965 Hose Assemblies to Blade Tilt Cylinder)	2
27	2J8232	GUARD ASSEM.	1
28	2J7731	CLAMP (Part of 2J8232 Guard Assem.)	2
29	2J7730	CLAMP	2
30	1A1460	BOLT	2
31	2J3340	STEM	2

97141

5J3998 BLADE TILT CYLINDER LINES GROUP—As Viewed from Front Left Hand Side of Tractor—Type 1

5J3998 BLADE TILT CYLINDER LINES GROUP—As Viewed from Front Left Hand Side of Tractor—Type 2

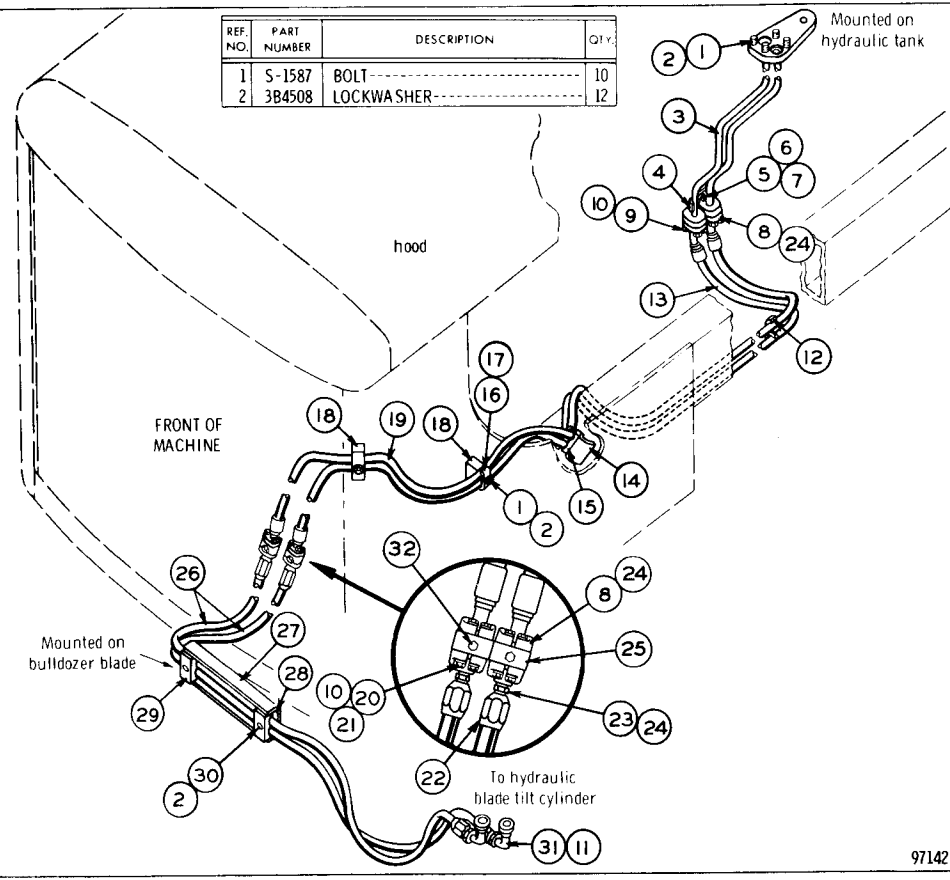

REF. NO.	PART NUMBER	DESCRIPTION	QTY.
1	S-1587	BOLT	10
2	3B4508	LOCKWASHER	12

REF. NO.	PART NUMBER	DESCRIPTION	QTY.
3	5J3596	TUBE ASSEM.	1
4	5J3688	CLAMP (Part of 5J3596 Tube Assem.)	1
5	S-1588	BOLT	1
6	3B4506	LOCKWASHER	1
7	T-431	WASHER	1
8	1H5278	FLANGE	12
9	1B2790	BOLT	8
10	3B4505	LOCKWASHER	16
11	8M4988	SEAL	2
12	2J7731	CLAMP	3
13	5J5964	HOSE ASSEM. -----(198" Long)----- (5J3596 Tube Assem. to 2J6138 Hose)	1
14	5J4958	BRACKET ASSEM.	1
15	1J7647	CLAMP (Part of 5J4958 Bracket Assem.)	1
16	1J7468	CLAMP	3
17	2J9900	SPACER	3
18	2J6294	CLAMP	2
19	5J5965	HOSE ASSEM. -----(201" Long)----- (5J3596 Tube Assem. to 2J6138 Hose)	1
20	1D4539	BOLT	8
21	1D4716	NUT	8
22	2J3339	SOCKET	4
23	2J6144	STEM	2
24	8M4435	SEAL	4
25	6J212	ADAPTER	2
26	2J6138	HOSE---------(104" Long)--------- (5J5964 & 5J5965 Hose Assemblies to Blade Tilt Cylinder)	2
27	2J8232	GUARD ASSEM.	1
28	2J7731	CLAMP (Part of 2J8232 Guard Assem.)	2
29	2J7730	CLAMP	2
30	1A1460	BOLT	2
31	2J3340	STEM	2
32	5M7908	PLUG ASSEM.	2
	3J1907	SEAL (1 in each 5M7908 Plug Assem.)	2

ONLY "CATERPILLAR" PARTS GIVE "CATERPILLAR" PERFORMANCE

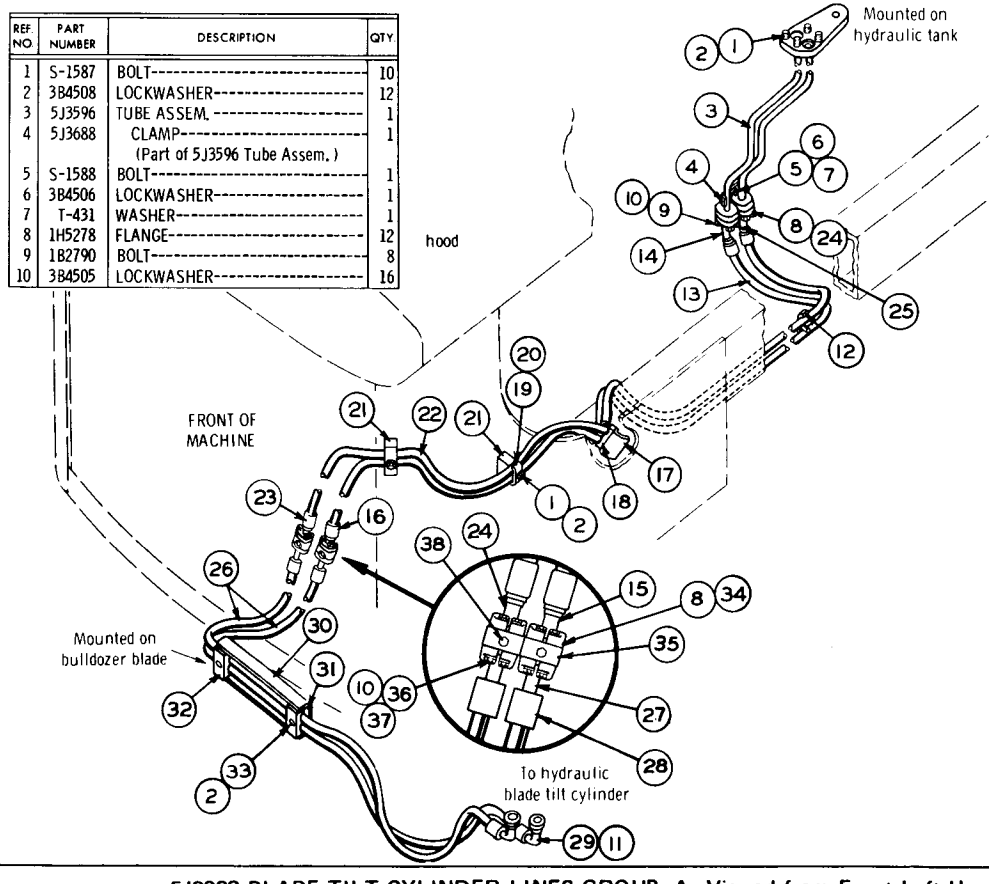

REF. NO.	PART NUMBER	DESCRIPTION	QTY
1	S-1587	BOLT	10
2	3B4508	LOCKWASHER	12
3	5J3596	TUBE ASSEM.	1
4	5J3688	CLAMP (Part of 5J3596 Tube Assem.)	1
5	S-1588	BOLT	1
6	3B4506	LOCKWASHER	1
7	T-431	WASHER	1
8	1H5278	FLANGE	12
9	1B2790	BOLT	8
10	3B4505	LOCKWASHER	16

REF. NO.	PART NUMBER	DESCRIPTION	QTY
11	8M4988	SEAL	2
12	2J7731	CLAMP	3
	5S8804	HOSE ASSEM.	1
		Consisting of:	
13	5S8302	HOSE	1
14	3S8619	STEM ASSEM.	1
15	3S8617	STEM ASSEM.	1
16	3S8606	SLEEVE	2
17	5J4958	BRACKET ASSEM.	1
18	1J7647	CLAMP (Part of 5J4958 Bracket Assem.)	1
19	1J7468	CLAMP	3
20	2J9900	SPACER	3
21	2J6294	CLAMP	2
	5S8805	HOSE ASSEM.	1
		Consisting of:	
22	5S8303	HOSE	1
23	3S8606	SLEEVE	2
24	3S8617	STEM ASSEM.	1
25	3S8619	STEM ASSEM.	1
	7S240	HOSE ASSEM.	2
		Each Consisting of:	
26	7S59	HOSE	1
27	3S8617	STEM ASSEM.	1
28	3S8606	SLEEVE	2
29	5S9593	STEM ASSEM.	1
30	2J8232	GUARD ASSEM.	1
31	2J7731	CLAMP (Part of 2J8232 Guard Assem.)	2
32	2J7730	CLAMP	2
33	1A1460	BOLT	2
34	8M4435	SEAL	6
35	6J212	ADAPTER	2
36	1D4539	BOLT	8
37	1D4716	NUT	8
38	5M7908	PLUG ASSEM.	2
	3J1907	SEAL (1 in each 5M7908 Plug Assem.)	2

122477

5J3998 BLADE TILT CYLINDER LINES GROUP—As Viewed from Front Left Hand Side of Tractor—Type 3

5J3998 BLADE TILT CYLINDER LINES GROUP—As Viewed from Front Left Hand Side of Tractor—Type 4

▲ ORDER BY THE INCH
C INDICATES CHANGE FROM PREVIOUS TYPE

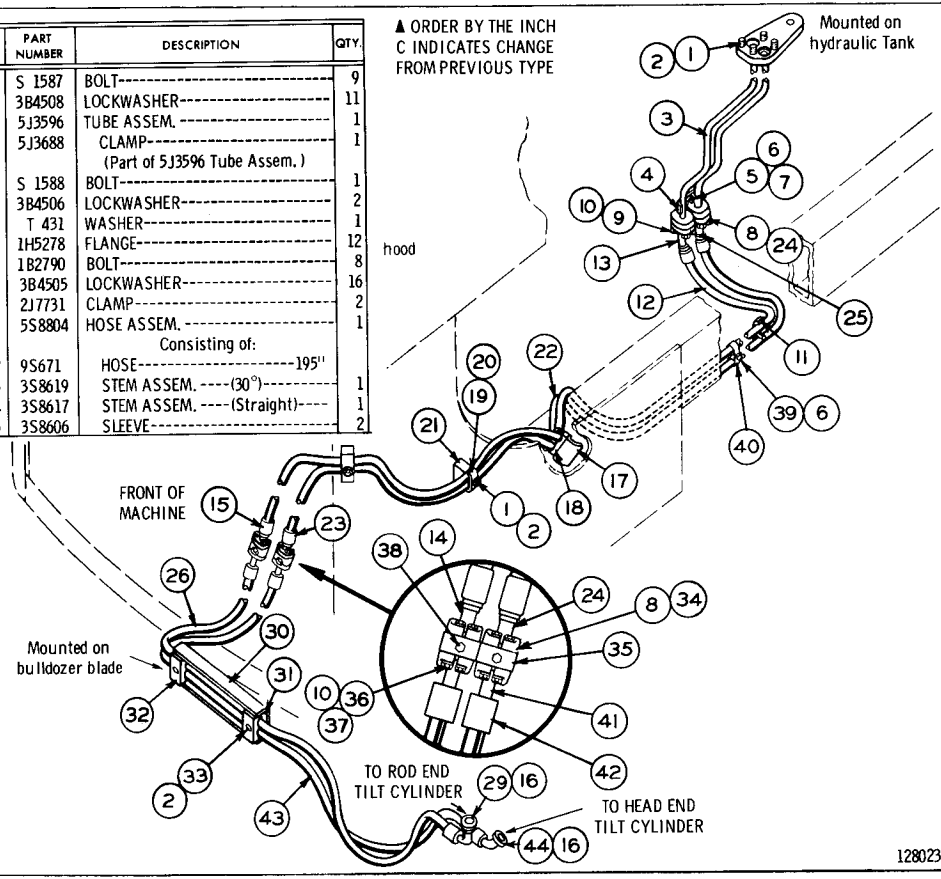

	REF. NO.	PART NUMBER	DESCRIPTION	QTY.
C	1	S 1587	BOLT	9
C	2	3B4508	LOCKWASHER	11
	3	5J3596	TUBE ASSEM.	1
	4	5J3688	CLAMP (Part of 5J3596 Tube Assem.)	1
	5	S 1588	BOLT	1
C	6	3B4506	LOCKWASHER	2
	7	T 431	WASHER	1
	8	1H5278	FLANGE	12
	9	1B2790	BOLT	8
	10	3B4505	LOCKWASHER	16
C	11	2J7731	CLAMP	2
		5S8804	HOSE ASSEM. Consisting of:	1
▲	12	9S671	HOSE—195"	
	13	3S8619	STEM ASSEM. —(30°)—	1
	14	3S8617	STEM ASSEM. —(Straight)—	1
	15	3S8606	SLEEVE	2

	REF. NO.	PART NUMBER	DESCRIPTION	QTY
	16	8M4988	SEAL	2
	17	5J4958	BRACKET ASSEM.	1
	18	1J7647	CLAMP (Part of 5J4958 Assem.)	1
	19	1J7468	CLAMP	3
	20	2J9900	SPACER	3
	21	2J6294	CLAMP	2
		5S8805	HOSE ASSEM. Consisting of:	1
▲	22	9S671	HOSE—198"	
	23	3S8606	SLEEVE	2
	24	3S8617	STEM ASSEM. —(Straight)—	1
	25	3S8619	STEM ASSEM. —(30°)—	1
		7S240	HOSE ASSEM. Consisting of:	1
▲	26	9S671	HOSE—104"	
	27	3S8617	STEM ASSEM. —(Straight)—	1
	28	3S8606	SLEEVE	2
	29	5S9593	STEM ASSEM. —(90°)—	1
	30	2J8232	GUARD ASSEM.	1
	31	2J7731	CLAMP (Part of 2J8232 Assem.)	2
	32	2J7730	CLAMP	2
	33	1A1460	BOLT	2
	34	8M4435	SEAL	6
	35	6J212	ADAPTER	2
	36	1D4539	BOLT	8
	37	1D4716	NUT	8
C	38	9S4191	PLUG	2
		3J1907	SEAL	2
C	39	S1594	BOLT	1
C		1D4717	NUT	1
C	40	9M4815	CLIP	1
C		8S4414	HOSE ASSEM. Consisting of:	1
	41	3S8617	STEM ASSEM. —(Straight)—	1
	42	3S8606	SLEEVE	2
▲	43	9S671	HOSE—104"	
	44	5S9591	STEM ASSEM. —(45°)—	1

ONLY "CATERPILLAR" PARTS GIVE "CATERPILLAR" PERFORMANCE

5J4393 BLADE TILT LINES GROUP—As Viewed from Front Left Hand Side of Tractor—Type 1

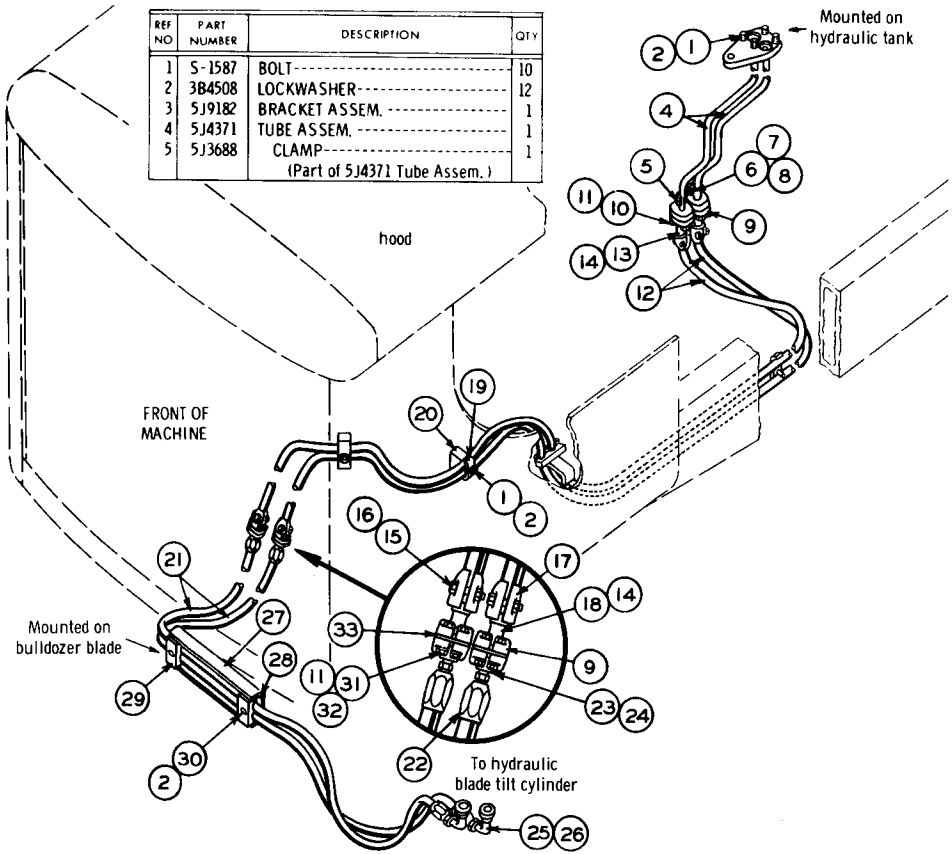

REF NO	PART NUMBER	DESCRIPTION	QTY
1	S-1587	BOLT	10
2	3B4508	LOCKWASHER	12
3	5J9182	BRACKET ASSEM.	1
4	5J4371	TUBE ASSEM.	1
5	5J3688	CLAMP (Part of 5J4371 Tube Assem.)	1

REF NO	PART NUMBER	DESCRIPTION	QTY
6	S-1588	BOLT	1
7	3B4506	LOCKWASHER	1
8	T-431	WASHER	1
9	1H5278	FLANGE	12
10	1B7182	BOLT	8
11	3B4505	LOCKWASHER	16
	5J4705	HOSE ASSEM. (Ref. No. 4 to 3J1032 Hose Assem.) Each consisting of:	2
12	5J8637	HOSE ------(202.25" Long)------	1
13	8M2705	STEM	1
14	5F7054	SEAL	2
15	1A9579	BOLT	4
16	1D4716	NUT	4
17	8M1630	CLAMP	4
18	8M1619	STEM	1
19	1J7468	CLAMP	6
	3J3802	SPACER	6
20	2J6294	CLAMP	2
	3J1032	HOSE ASSEM. (5J4705 Hose Assem. to Blade Tilt Cylinder) Each consisting of:	2
21	2J7981	HOSE ------(122.50" Long)------	1
22	2J3339	SOCKET	2
23	2J6144	STEM	1
24	5F7054	SEAL	1
25	2J3340	STEM	1
26	5F1678	SEAL	1
27	2J8232	GUARD ASSEM.	1
28	2J7731	CLAMP (Part of 2J8232 Guard Assem.)	2
29	2J7730	CLAMP	2
30	1A1460	BOLT	2
31	1A9579	BOLT	8
32	1D4716	NUT	8
33	3H6274	PLATE	2

95097

ONLY "CATERPILLAR" PARTS GIVE "CATERPILLAR" PERFORMANCE

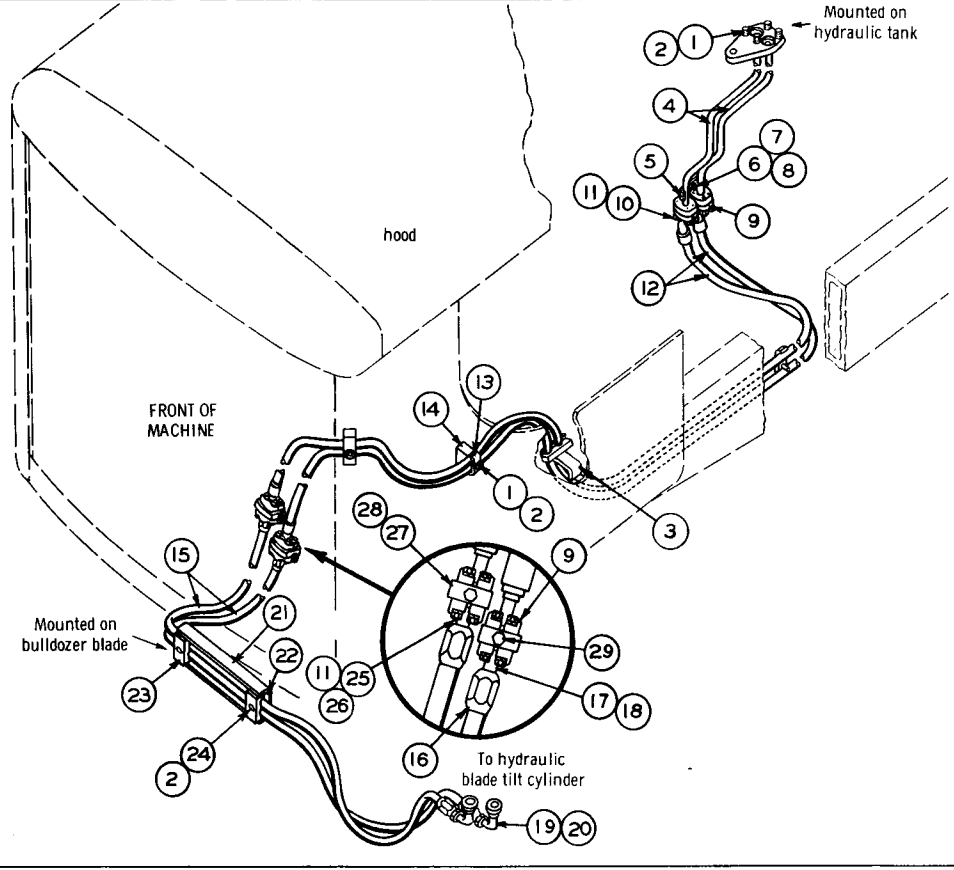

REF NO	PART NUMBER	DESCRIPTION	QTY
1	S-1587	BOLT	10
2	3B4508	LOCKWASHER	12
3	5J9182	BRACKET ASSEM.	1
4	5J4371	TUBE ASSEM.	1
5	5J3688	CLAMP (Part of 5J4371 Tube Assem.)	1
6	S-1588	BOLT	1
7	3B4506	LOCKWASHER	1
8	T-431	WASHER	1
9	1H5278	FLANGE	12
10	1B7182	BOLT	8
11	3B4505	LOCKWASHER	16
12	5J4705	HOSE ASSEM. -(206" long overall)- (Ref. No. 4 to 3J1032 Hose Assem.)	2
13	1J7468	CLAMP	6
	3J3802	SPACER	6
14	2J6294	CLAMP	2
	3J1032	HOSE ASSEM. (Ref. No. 12 to Blade Tilt Cylinder) Each consisting of:	2
15	2J7981	HOSE-------(122.50" Long)	1
16	2J3339	SOCKET	2
17	2J6144	STEM	1
18	5F7054	SEAL	1
19	2J3340	STEM	1
20	5F1678	SEAL	1
21	2J8232	GUARD ASSEM.	1
22	2J7731	CLAMP (Part of 2J8232 Guard Assem.)	2
23	2J7730	CLAMP	2
24	1A1460	BOLT	2
25	1D4539	BOLT	8
26	1D4716	NUT	8
27	6J212	ADAPTER	2
28	8M4435	SEAL	4
29	5M7908	PLUG ASSEM.	2
	3J1907	SEAL (1 in each 5M7908 Plug Assem.)	2

97654

5J4393 BLADE TILT LINES GROUP—As Viewed from Front Left Hand Side of Tractor—Type 2

5J4393 BLADE TILT LINES GROUP—As Viewed from Front Left Hand Side of Tractor—Type 3

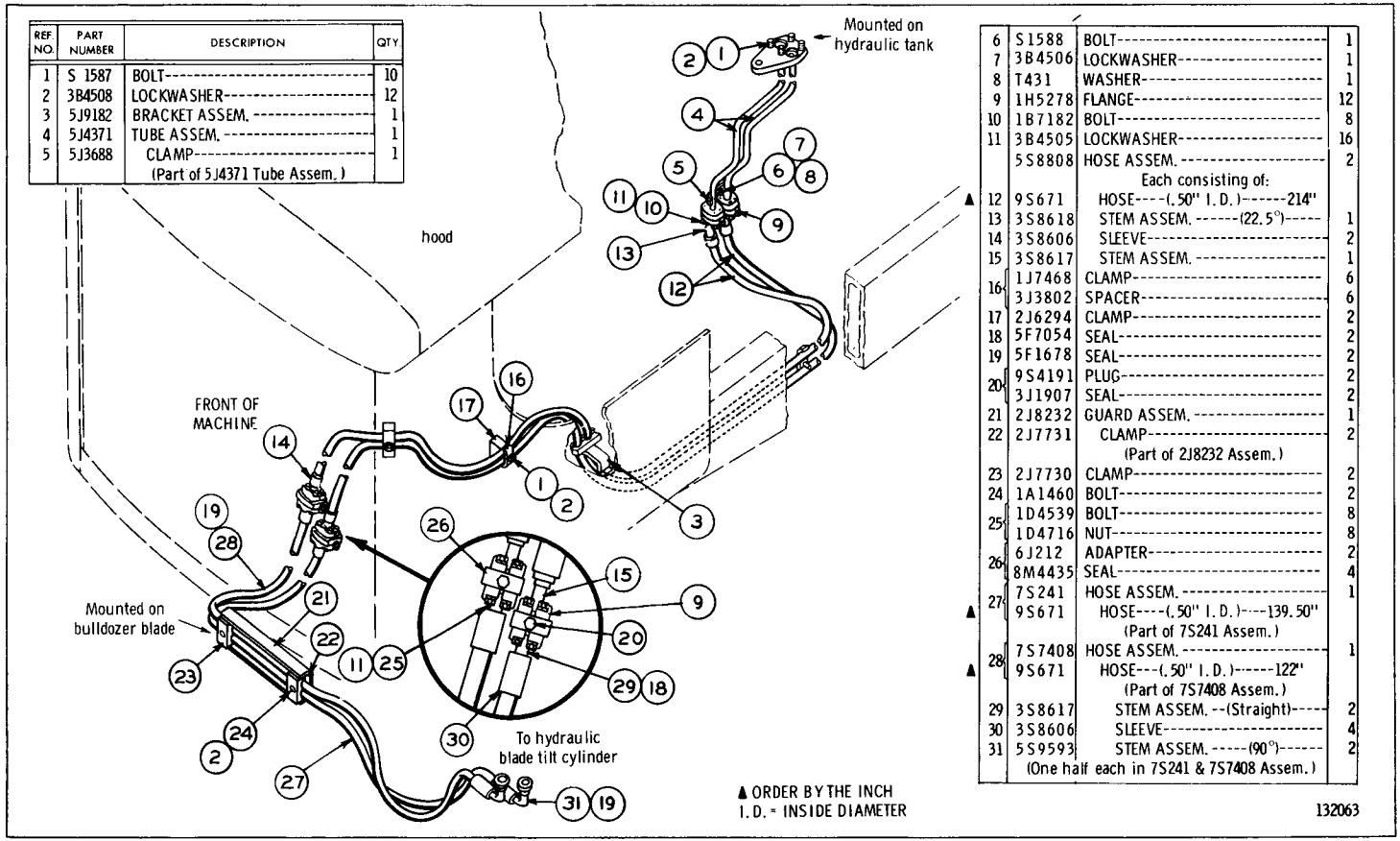

REF. NO.	PART NUMBER	DESCRIPTION	QTY
1	S 1587	BOLT	10
2	3B4508	LOCKWASHER	12
3	5J9182	BRACKET ASSEM.	1
4	5J4371	TUBE ASSEM.	1
5	5J3688	CLAMP (Part of 5J4371 Tube Assem.)	1

6	S1588	BOLT	1
7	3B4506	LOCKWASHER	1
8	T431	WASHER	1
9	1H5278	FLANGE	12
10	1B7182	BOLT	8
11	3B4505	LOCKWASHER	16
	5S8808	HOSE ASSEM.	2
		Each consisting of:	
▲ 12	9S671	HOSE---(.50" I. D.)------214"	
13	3S8618	STEM ASSEM. ------(22.5°)-----	1
14	3S8606	SLEEVE	2
15	3S8617	STEM ASSEM.	1
16	1J7468	CLAMP	6
	3J3802	SPACER	6
17	2J6294	CLAMP	2
18	5F7054	SEAL	2
19	5F1678	SEAL	2
20	9S4191	PLUG	2
	3J1907	SEAL	2
21	2J8232	GUARD ASSEM.	1
22	2J7731	CLAMP (Part of 2J8232 Assem.)	2
23	2J7730	CLAMP	2
24	1A1460	BOLT	2
25	1D4539	BOLT	8
	1D4716	NUT	8
26	6J212	ADAPTER	2
	8M4435	SEAL	4
27	7S241	HOSE ASSEM.	1
▲	9S671	HOSE---(.50" I. D.)---139.50" (Part of 7S241 Assem.)	
28	7S7408	HOSE ASSEM.	1
▲	9S671	HOSE---(.50" I. D.)------122" (Part of 7S7408 Assem.)	
29	3S8617	STEM ASSEM. --(Straight)-----	2
30	3S8606	SLEEVE	4
31	5S9593	STEM ASSEM. -----(90°)------	2
		(One half each in 7S241 & 7S8408 Assem.)	

▲ ORDER BY THE INCH
I. D. = INSIDE DIAMETER

132063

ONLY "CATERPILLAR" PARTS GIVE "CATERPILLAR" PERFORMANCE

Consists of: Page

1 8S4383 Lines Group.....30E

1 9S9491 Plate

1 9S9492 Guard

1 ..... Instruction Form GMG00255

9S9578 SERVICE LINES GROUP—Field Installation
Provides field replacement for 8S6627 & 8S6628 Tube Assemblies when used on 9S or 9U Bulldozer

8S4383 BLADE TILT LINES GROUP—As Viewed from Left Hand Side of Tractor—Type 1

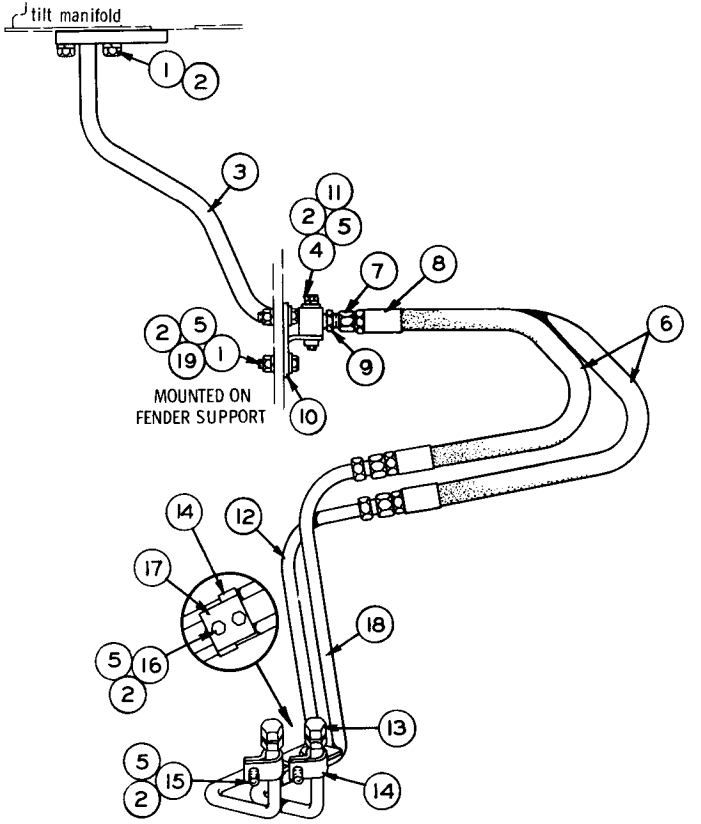

REF. NO.	PART NUMBER	DESCRIPTION	QTY
1	S1685	BOLT	6
2	3B4508	LOCKWASHER	11
3	8S5366	TUBE ASSEM. ----(21.85" long)----	1
4	9S1366	BOLT	1
5	4B4280	WASHER	7
	8S6621	HOSE ASSEM. --(44" long overall)--	2
		Each consisting of:	
6	8S6620	HOSE	1
7	8S4055	COUPLING ASSEM.	2
8	3S8606	SLEEVE	2
9	4D355	FITTING	2
	3K360	SEAL	2
		(1 in each 4D355 Fitting)	
10	8S6619	BRACKET ASSEM.	1
11	1F748	NUT	1
		(Part of 8S6619 Bracket Assem.)	
12	8S6627	TUBE ASSEM. ----(36.96" long)----	1
13	8S4951	CAP----------(protection)----------	2
14	4D9459	CLIP	4
15	2H3855	BOLT	2
16	S1621	BOLT	2
17	8S5622	BLOCK	1
18	8S6628	TUBE ASSEM. ----(37.09" long)----	1
19	1D4719	NUT	2

135338

ONLY "CATERPILLAR" PARTS GIVE "CATERPILLAR" PERFORMANCE

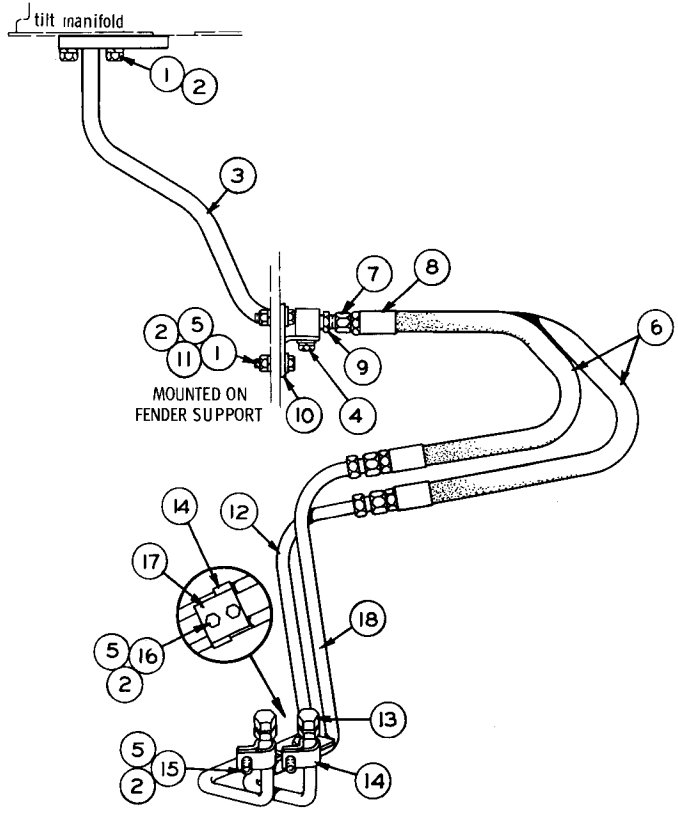

REF. NO.	PART NUMBER	DESCRIPTION	QTY
1	S1585	BOLT	6
2	3B4508	LOCKWASHER	10
3	9S7278	TUBE ASSEM.	1
	S1594	BOLT	1
4	3B4506	LOCKWASHER	1
	3K925	WASHER	1
5	4B4280	WASHER	6
	8S6621	HOSE ASSEM.	2
		Each Consisting of:	
▲ 6	9S671	HOSE-40.2" (Angle Orientation 0 Degrees)	
7	8S4055	COUPLING ASSEM.	2
8	3S8606	SLEEVE	2
9	4D355	FITTING	2
	3K360	SEAL	1
10	9S7665	BRACKET	1
11	1D4719	NUT	2
12	8S6627	TUBE ASSEM. -(36.96" Long)-	1
13	8S4951	CAP-(Protection)-	2
14	4D9459	CLIP	4
15	2H3855	BOLT	2
16	S1621	BOLT	2
17	8S5622	BLOCK	1
18	8S6628	TUBE ASSEM. -(37.09" Long)-	1

▲ ORDER BY THE INCH

135335

8S4383 BLADE TILT LINES GROUP—As Viewed from Left Hand Side of Tractor—Type 2

8S4383 BLADE TILT LINES GROUP—As Viewed from Left Hand Side of Tractor—Type 3

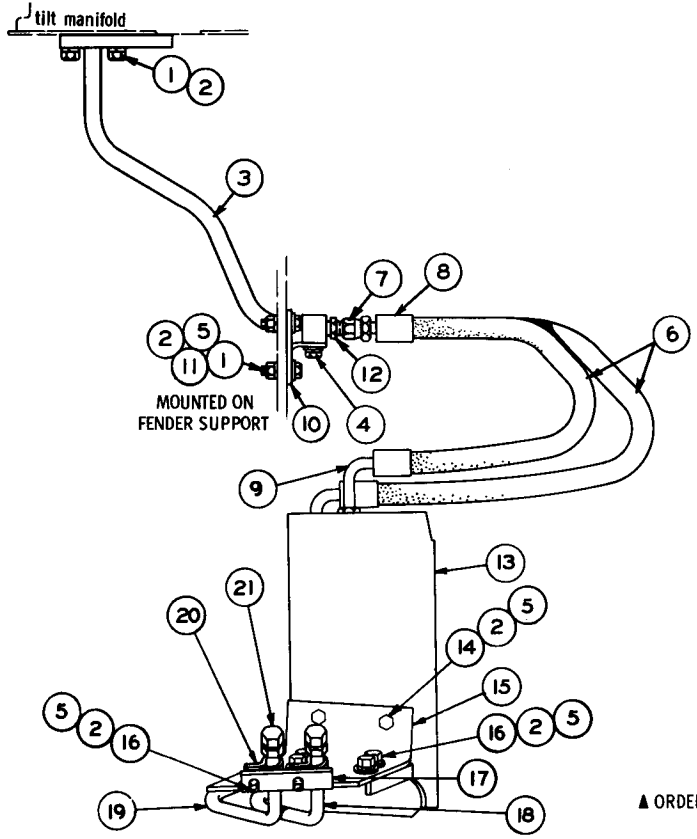

REF. NO.	PART NUMBER	DESCRIPTION	QTY
1	S1585	BOLT	6
2	3B4508	LOCKWASHER	14
3	9S7278	TUBE ASSEM.	1
4	S1594	BOLT	1
	3B4506	LOCKWASHER	1
	3K925	WASHER	1
5	4B4280	WASHER	10
	8S4939	HOSE ASSEM.	2
		Each Consisting of:	
▲ 6	9S671	HOSE-36.8" (Angle Orientation 0 Degrees)	
7	8S4055	COUPLING ASSEM. --(Straight)--	1
8	3S8606	SLEEVE	2
9	1P8408	COUPLING ASSEM. ----(90°)-----	1
10	9S7665	BRACKET	1
11	1D4719	NUT	2
12	4D355	FITTING	2
	3K360	SEAL	1
	9S9510	GUARD ASSEM.	1
13	7S9372	BOLT	2
	3B4510	LOCKWASHER	2
14	S1621	BOLT	2
15	9S9507	GUARD ASSEM.	1
16	S1595	BOLT	6
17	9S3970	BAR	1
18	9S9499	TUBE ASSEM.	1
19	9S9502	TUBE ASSEM.	1
20	4D9459	CLIP	2
21	8S4951	CAP-(Protection)-	2

▲ ORDER BY THE INCH

135336

ONLY "CATERPILLAR" PARTS GIVE "CATERPILLAR" PERFORMANCE

8S4383 BLADE TILT LINES GROUP—As Viewed from Left Hand Side of Tractor—Type 4

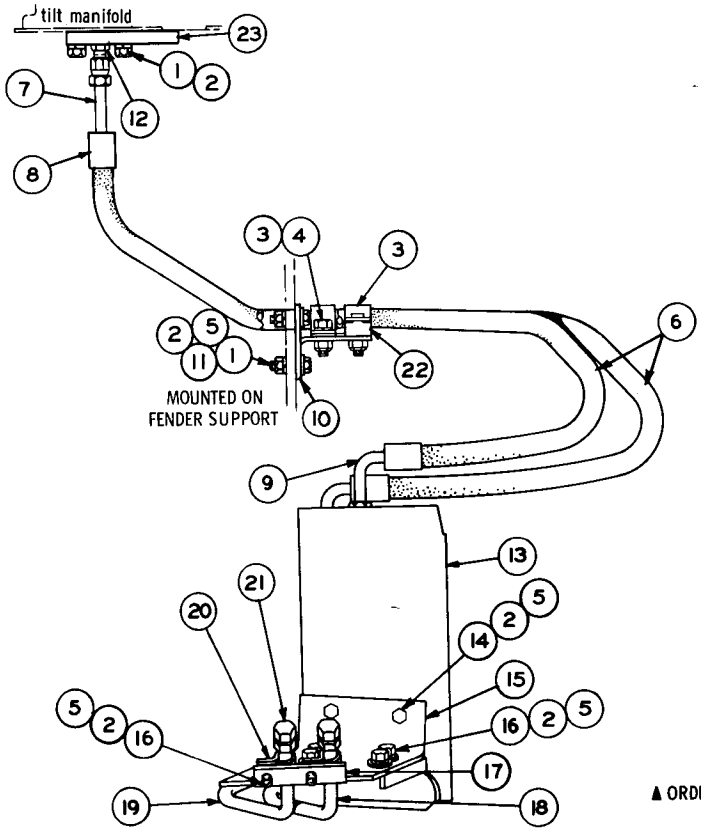

REF. NO.	PART NUMBER	DESCRIPTION	QTY
1	S1585	BOLT	6
2	3B4508	LOCKWASHER	14
3	7S3919	CLIP	2
4	S1594	BOLT	2
	3B4506	LOCKWASHER	2
	4B4278	WASHER	2
5	4B4280	WASHER	10
	2P2959	HOSE ASSEM.	2
		Each Consisting of:	
▲ 6	9S671	HOSE-59.6" (Angle Orientation 0 Degrees)	
7	2P3178	COUPLING ASSEM. --(Straight)--	1
8	3S8606	SLEEVE	2
9	1P8408	COUPLING ASSEM. ----(90°)-----	1
10	2P2621	BRACKET ASSEM.	1
	9F2978	NUT---------(Weld)----------	2
11	1D4719	NUT	2
12	4D355	FITTING	2
	3K360	SEAL	1
13	9S9510	GUARD ASSEM.	1
	7S9372	BOLT	2
	3B4510	LOCKWASHER	2
14	S1621	BOLT	2
15	9S9507	GUARD ASSEM.	1
16	S1595	BOLT	6
17	9S3970	BAR	1
18	9S9499	TUBE ASSEM.	1
19	9S9502	TUBE ASSEM.	1
20	4D9459	CLIP	2
21	8S4951	CAP---------(Protection)---------	2
22	7S3916	CLIP	2
23	2P2637	FLANGE	1
	4J5267	SEAL	2

▲ ORDER BY THE INCH

135337

ONLY "CATERPILLAR" PARTS GIVE "CATERPILLAR" PERFORMANCE

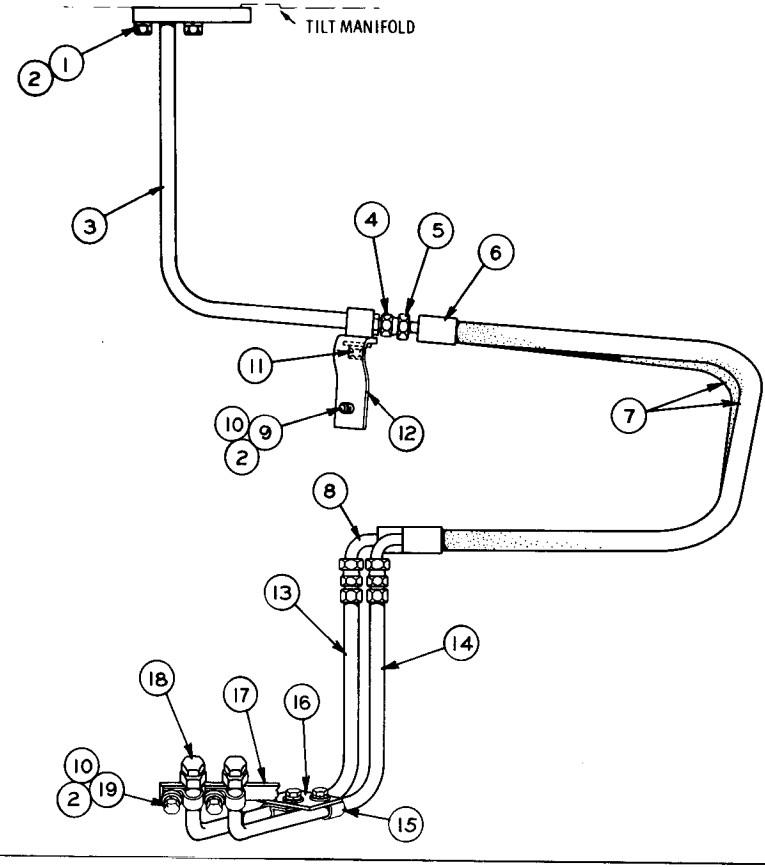

REF. NO.	PART NUMBER	DESCRIPTION	QTY
1	S1585	BOLT	4
2	3B4508	LOCKWASHER	9
3	8S8655	TUBE ASSEM.	1
4	4D355	FITTING	2
	3K360	SEAL (1 in each 4D355 Fitting)	2
	8S4930	HOSE ASSEM. -(36.90" long overall) Each consisting of:	2
5	8S4055	COUPLING ASSEM.	1
6	3S8606	SLEEVE	2
7	5S8329	HOSE	1
8	8S6391	COUPLING ASSEM. ----(90°)----	1
9	S1621	BOLT	1
10	4B4280	WASHER	5
11	1A2029	BOLT	1
	3B4506	LOCKWASHER	1
	8M4069	WASHER	1
12	9S3974	BRACKET	1
13	8S8656	TUBE ASSEM.	1
14	8S8657	TUBE ASSEM.	1
15	4D9459	CLIP	4
16	9S3969	PLATE	1
17	9S3970	BAR	1
18	8S4951	CAP----------(Protection)----------	2
19	6H1717	BOLT	4

124398

8S6918 BLADE TILT LINES GROUP—Type 1

8S6918 BLADE TILT LINES GROUP—Type 2

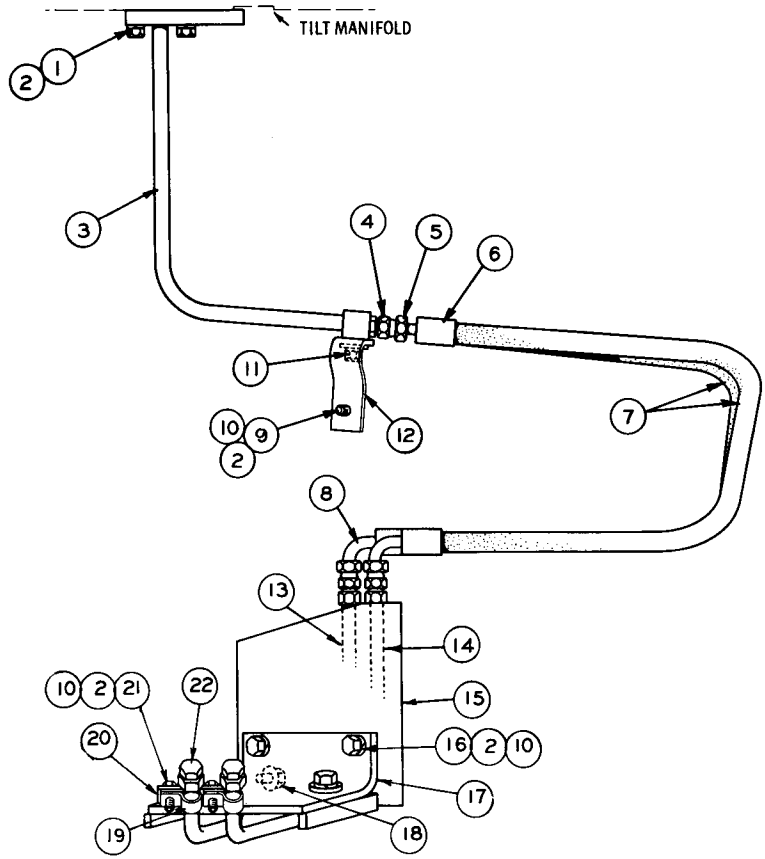

C INDICATES CHANGE FROM PREVIOUS TYPE

	REF. NO.	PART NUMBER	DESCRIPTION	QTY
	1	S1585	BOLT	4
C	2	3B4508	LOCKWASHER	12
	3	8S8655	TUBE ASSEM.	1
	4	4D355	FITTING	2
		3K360	SEAL	2
			(1 in each 4D355 Fitting)	
		8S4930	HOSE ASSEM.-(36.90" long overall)	2
			Each consisting of:	
	5	8S4055	COUPLING ASSEM.	1
	6	3S8606	SLEEVE	2
	7	5S8329	HOSE	1
	8	8S6391	COUPLING ASSEM. ----(90°)----	1
	9	S1621	BOLT	1
C	10	4B4280	WASHER	8
	11	1A2029	BOLT	1
		3B4506	LOCKWASHER	1
		8M4069	WASHER	1
	12	9S3974	BRACKET	1
	13	8S8656	TUBE ASSEM.	1
	14	8S8657	TUBE ASSEM.	1
C	15	9S9629	GUARD ASSEM.	1
C	16	S1595	BOLT	5
C	17	9S9632	GUARD ASSEM.	1
C	18	S1589	BOLT	2
C		3B4510	LOCKWASHER	2
C		4B4281	WASHER	2
C	19	4D9459	CLIP	2
	20	9S3970	BAR	1
C	21	6H1717	BOLT	2
	22	8S4951	CAP---------(Protection)---------	2

107881

ONLY "CATERPILLAR" PARTS GIVE "CATERPILLAR" PERFORMANCE

	Consists of:		Page
1	8S4384	Lines Group.....	30H
1	9S9491	Plate	
1	9S9492	Guard	
1	.....	Installation Form GMG00255	

9S9579 SERVICE LINES GROUP—Field Installation
Provides field replacement for 8S6627, 8S6628, 8S6629 & 8S6630
Tube Assemblies when used on 9R Bulldozer

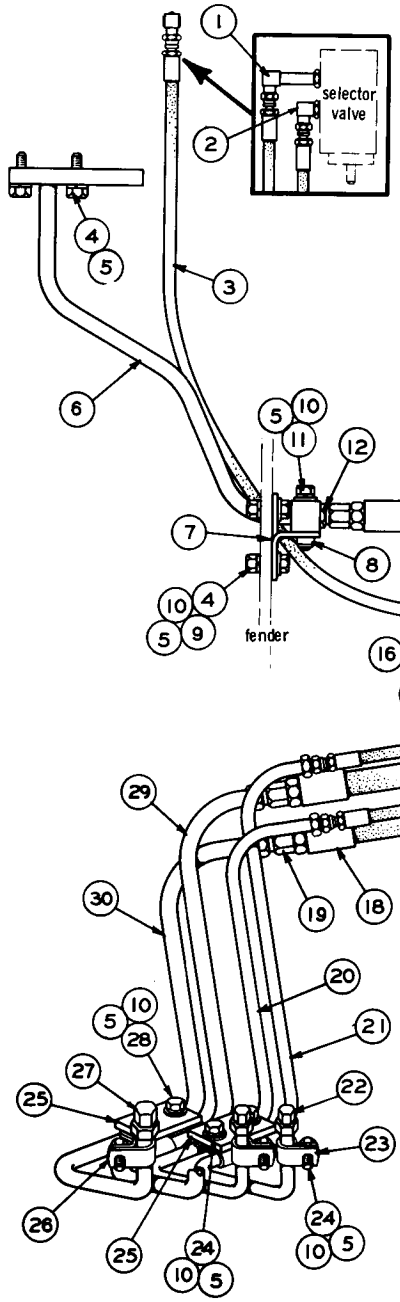

REF. NO.	PART NUMBER	DESCRIPTION	QTY
1	8S6631	ELBOW	1
2	6M6950	FITTING	1
	3J1907	SEAL (Part of 6M6950 Fitting)	1
3	8S5364	HOSE ASSEM. --(64" long overall)--	2
4	S1585	BOLT	6
5	3B4508	LOCKWASHER	15
6	8S5366	TUBE ASSEM.	1
7	8S6619	BRACKET ASSEM.	1
8	1F748	NUT-----(Weld)----- (Part of 8S6619 Bracket Assem.)	1
9	1D4719	NUT	2
10	4B4280	WASHER	11
11	9S1366	BOLT	1
12	4D355	ADAPTER	2
13	S509	BOLT	3
	3B4506	LOCKWASHER	3
14	4B4278	WASHER	2
15	9M9840	CLIP	2
16	8S5621	BRACKET ASSEM.	1
	9F2978	NUT-----(Weld)----- (Part of 8S5621 Bracket Assem.)	2
	8S6621	HOSE ASSEM. --(44" long overall)-- Each consisting of:	2
17	8S6620	HOSE	1
18	3S8606	SLEEVE	2
19	8S4055	COUPLING ASSEM.	2
20	8S6629	TUBE ASSEM.	1
21	8S6630	TUBE ASSEM.	1
22	8S4950	CAP---------(Protection)---------	2
23	2B3243	CLIP	4
24	2H3855	BOLT	6
25	8S5622	BLOCK	2
26	4D9459	CLIP	4
27	8S4951	CAP---------(Protection)---------	2
28	S1621	BOLT	2
29	8S6628	TUBE ASSEM.	1
30	8S6627	TUBE ASSEM.	1

135339

8S4384 RIPPER BULLDOZER AND TILT LINES GROUP—Type 1

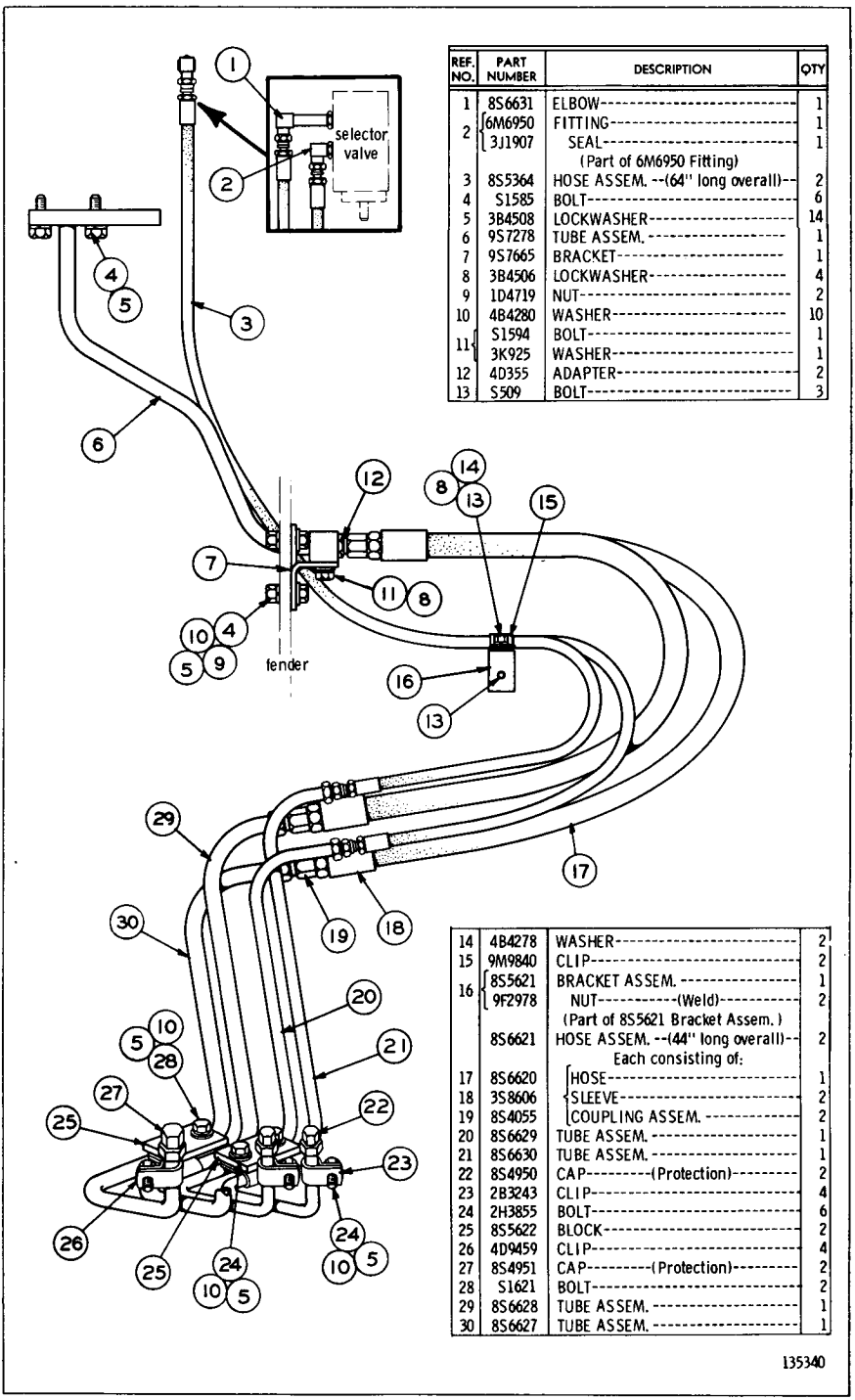

REF. NO.	PART NUMBER	DESCRIPTION	QTY
1	8S6631	ELBOW	1
2	6M6950	FITTING	1
	3J1907	SEAL	1
		(Part of 6M6950 Fitting)	
3	8S5364	HOSE ASSEM. --(64" long overall)--	2
4	S1585	BOLT	6
5	3B4508	LOCKWASHER	14
6	9S7278	TUBE ASSEM.	1
7	9S7665	BRACKET	1
8	3B4506	LOCKWASHER	4
9	1D4719	NUT	2
10	4B4280	WASHER	10
11	S1594	BOLT	1
	3K925	WASHER	1
12	4D355	ADAPTER	2
13	S509	BOLT	3

14	4B4278	WASHER	2
15	9M9840	CLIP	2
16	8S5621	BRACKET ASSEM.	1
	9F2978	NUT----------(Weld)----------	2
		(Part of 8S5621 Bracket Assem.)	
	8S6621	HOSE ASSEM. --(44" long overall)--	2
		Each consisting of:	
17	8S6620	HOSE	1
18	3S8606	SLEEVE	2
19	8S4055	COUPLING ASSEM.	2
20	8S6629	TUBE ASSEM.	1
21	8S6630	TUBE ASSEM.	1
22	8S4950	CAP---------(Protection)---------	2
23	2B3243	CLIP	4
24	2H3855	BOLT	6
25	8S5622	BLOCK	2
26	4D9459	CLIP	4
27	8S4951	CAP---------(Protection)---------	2
28	S1621	BOLT	2
29	8S6628	TUBE ASSEM.	1
30	8S6627	TUBE ASSEM.	1

8S4384 RIPPER BULLDOZER AND TILT LINES GROUP—Type 2

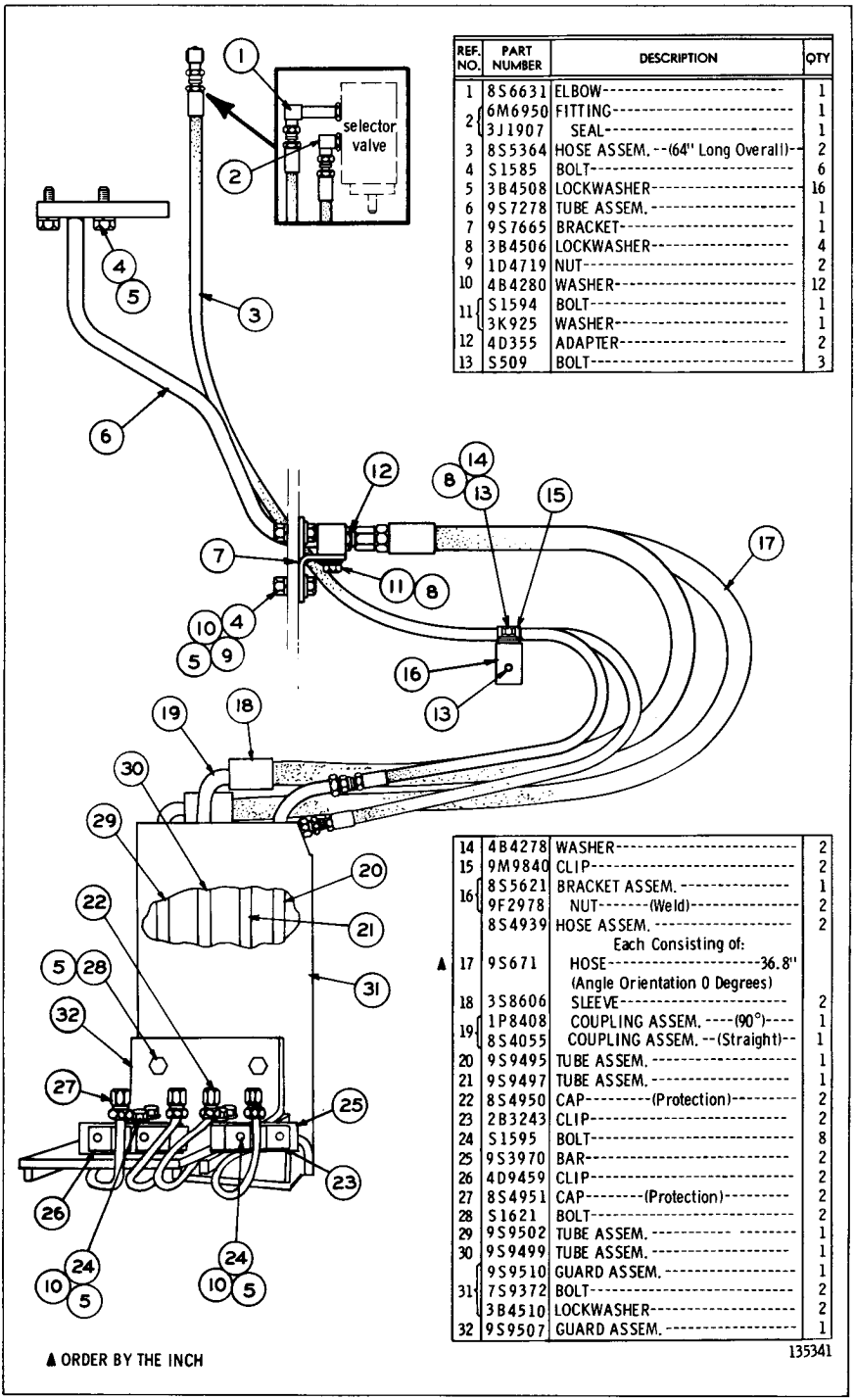

REF. NO.	PART NUMBER	DESCRIPTION	QTY
1	8S6631	ELBOW	1
2	6M6950	FITTING	1
	3J1907	SEAL	1
3	8S5364	HOSE ASSEM. --(64" Long Overall)--	2
4	S1585	BOLT	6
5	3B4508	LOCKWASHER	16
6	9S7278	TUBE ASSEM.	1
7	9S7665	BRACKET	1
8	3B4506	LOCKWASHER	4
9	1D4719	NUT	2
10	4B4280	WASHER	12
11	S1594	BOLT	1
	3K925	WASHER	1
12	4D355	ADAPTER	2
13	S509	BOLT	3
14	4B4278	WASHER	2
15	9M9840	CLIP	2
16	8S5621	BRACKET ASSEM.	1
	9F2978	NUT-------(Weld)	2
	8S4939	HOSE ASSEM.	2
		Each Consisting of:	
▲ 17	9S671	HOSE----------36.8" (Angle Orientation 0 Degrees)	
18	3S8606	SLEEVE	2
19	1P8408	COUPLING ASSEM. ----(90°)----	1
	8S4055	COUPLING ASSEM. --(Straight)--	1
20	9S9495	TUBE ASSEM.	1
21	9S9497	TUBE ASSEM.	1
22	8S4950	CAP---------(Protection)---------	2
23	2B3243	CLIP	2
24	S1595	BOLT	8
25	9S3970	BAR	2
26	4D9459	CLIP	2
27	8S4951	CAP--------(Protection)--------	2
28	S1621	BOLT	2
29	9S9502	TUBE ASSEM.	1
30	9S9499	TUBE ASSEM.	1
31	9S9510	GUARD ASSEM.	1
	7S9372	BOLT	2
	3B4510	LOCKWASHER	2
32	9S9507	GUARD ASSEM.	1

8S4384 RIPPER BULLDOZER AND TILT LINES GROUP—Type 3

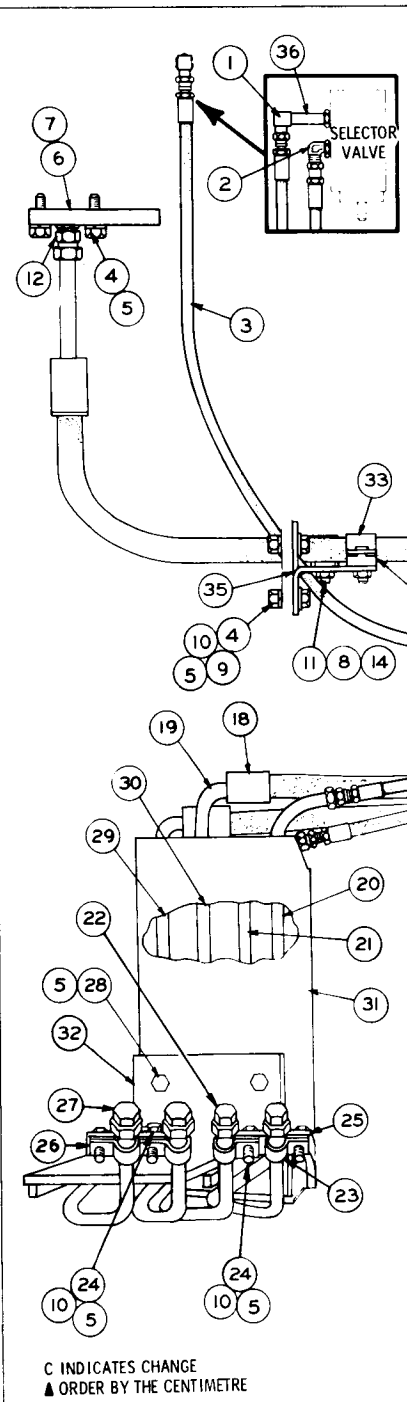

	REF. NO.	PART NUMBER	DESCRIPTION	QTY
	1	6K9194	ELBOW	1
C	2	307947	ELBOW	1
C		3J1907	SEAL	1
	3	8S5364	HOSE ASSEM. --(64" Long Overall)--	2
	4	S1585	BOLT	6
	5	3B4508	LOCKWASHER	16
C	6	2P2637	FLANGE	1
C	7	4J5267	SEAL	2
	8	3B4506	LOCKWASHER	5
	9	1D4719	NUT	2
	10	4B4280	WASHER	10
	11	S1594	BOLT	2
	12	4D355	ADAPTER	2
	13	S509	BOLT	3
C	14	4B4278	WASHER	4
	15	9M9840	CLIP	2
C	16	8S5621	BRACKET ASSEM.	1
		9F2978	NUT--------(Weld)--------	2

	REF. NO.	PART NUMBER	DESCRIPTION	QTY
C	17	2P2959	HOSE ASSEM.	2
▲		5P179	HOSE-------151.38 cm(59.60in.) (Angle Orientation 0 Degrees)	
	18	3S8606	SLEEVE	2
	19	1P8408	COUPLING ASSEM. ----(90)----	1
		2P3178	COUPLING ASSEM. --(Straight)--	1
	20	9S9495	TUBE ASSEM.	1
	21	9S9497	TUBE ASSEM.	1
	22	8S4950	CAP---------(Protection)--------	2
	23	2B3243	CLIP	2
	24	S1595	BOLT	8
	25	9S3970	BAR	2
	26	4D9459	CLIP	2
	27	8S4951	CAP--------(Protection)---------	2
	28	S1621	BOLT	2
	29	9S9502	TUBE ASSEM.	1
	30	9S9499	TUBE ASSEM.	1
	31	9S9510	GUARD ASSEM.	1
		7S9372	BOLT	2
		3B4510	LOCKWASHER	2
	32	9S9507	GUARD ASSEM.	1
C	33	7S3919	CLIP	2
C	34	7S3916	CLIP	2
C	35	2P2621	BRACKET ASSEM.	1
		9F2978	NUT----------(Weld)----------	2
C	36	1P1376	CONNECTOR	1
		3J1907	"O" RING	1

C INDICATES CHANGE
▲ ORDER BY THE CENTIMETRE

160501

8S4384 RIPPER BULLDOZER AND TILT LINES GROUP—Type 4

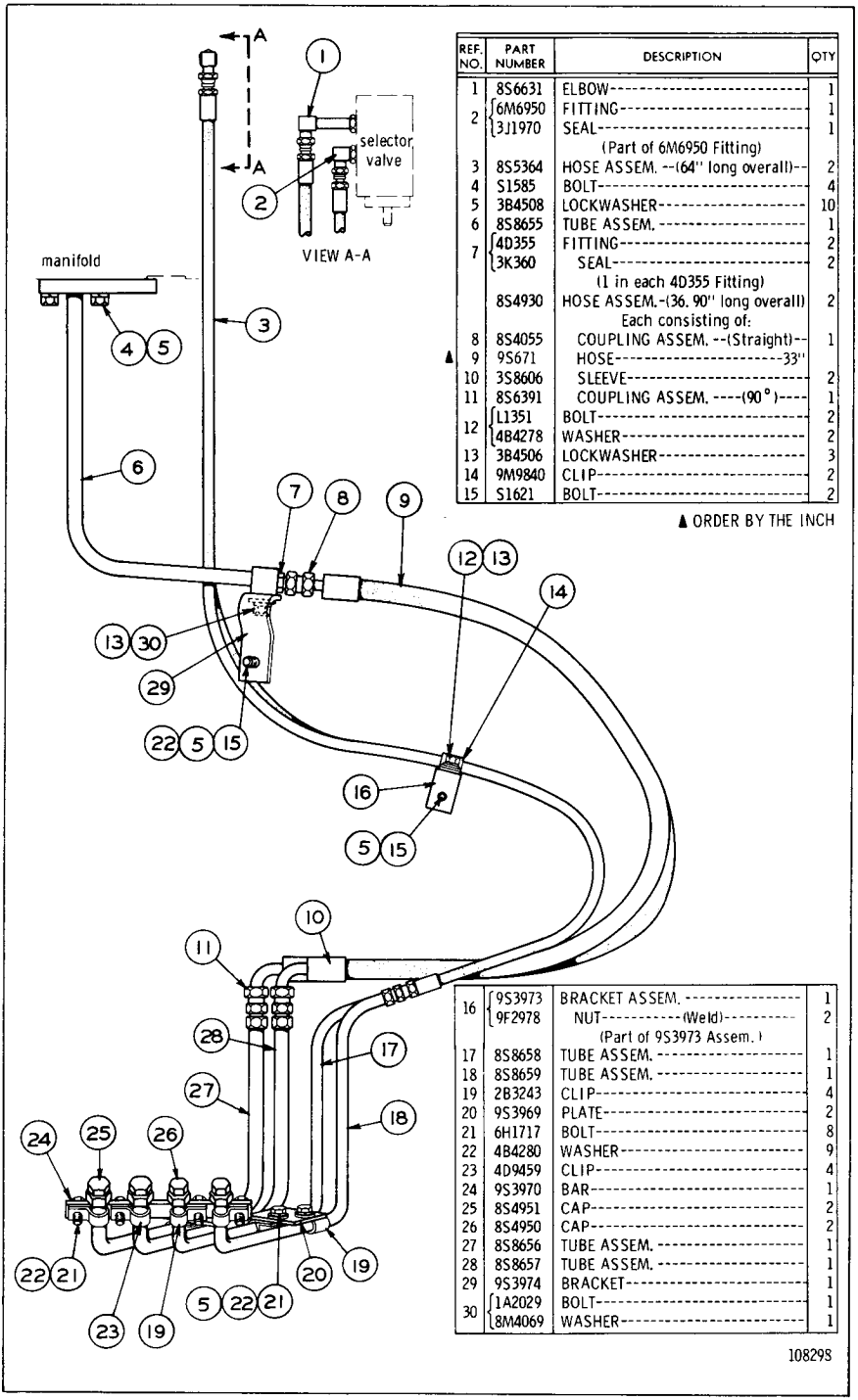

REF. NO.	PART NUMBER	DESCRIPTION	QTY
1	8S6631	ELBOW	1
2	6M6950	FITTING	1
	3J1970	SEAL (Part of 6M6950 Fitting)	1
3	8S5364	HOSE ASSEM. --(64" long overall)--	2
4	S1585	BOLT	4
5	3B4508	LOCKWASHER	10
6	8S8655	TUBE ASSEM.	1
7	4D355	FITTING	2
	3K360	SEAL (1 in each 4D355 Fitting)	2
	8S4930	HOSE ASSEM.-(36. 90" long overall) Each consisting of:	2
8	8S4055	COUPLING ASSEM. --(Straight)--	1
▲ 9	9S671	HOSE 33"	
10	3S8606	SLEEVE	2
11	8S6391	COUPLING ASSEM. ----(90°)----	1
12	L1351	BOLT	2
	4B4278	WASHER	2
13	3B4506	LOCKWASHER	3
14	9M9840	CLIP	2
15	S1621	BOLT	2

▲ ORDER BY THE INCH

16	9S3973	BRACKET ASSEM.	1
	9F2978	NUT----------(Weld)---------- (Part of 9S3973 Assem.)	2
17	8S8658	TUBE ASSEM.	1
18	8S8659	TUBE ASSEM.	1
19	2B3243	CLIP	4
20	9S3969	PLATE	2
21	6H1717	BOLT	8
22	4B4280	WASHER	9
23	4D9459	CLIP	4
24	9S3970	BAR	1
25	8S4951	CAP	2
26	8S4950	CAP	2
27	8S8656	TUBE ASSEM.	1
28	8S8657	TUBE ASSEM.	1
29	9S3974	BRACKET	1
30	1A2029	BOLT	1
	8M4069	WASHER	1

108298

8S6920 RIPPER BULLDOZER AND TILT LINES GROUP—Type 1

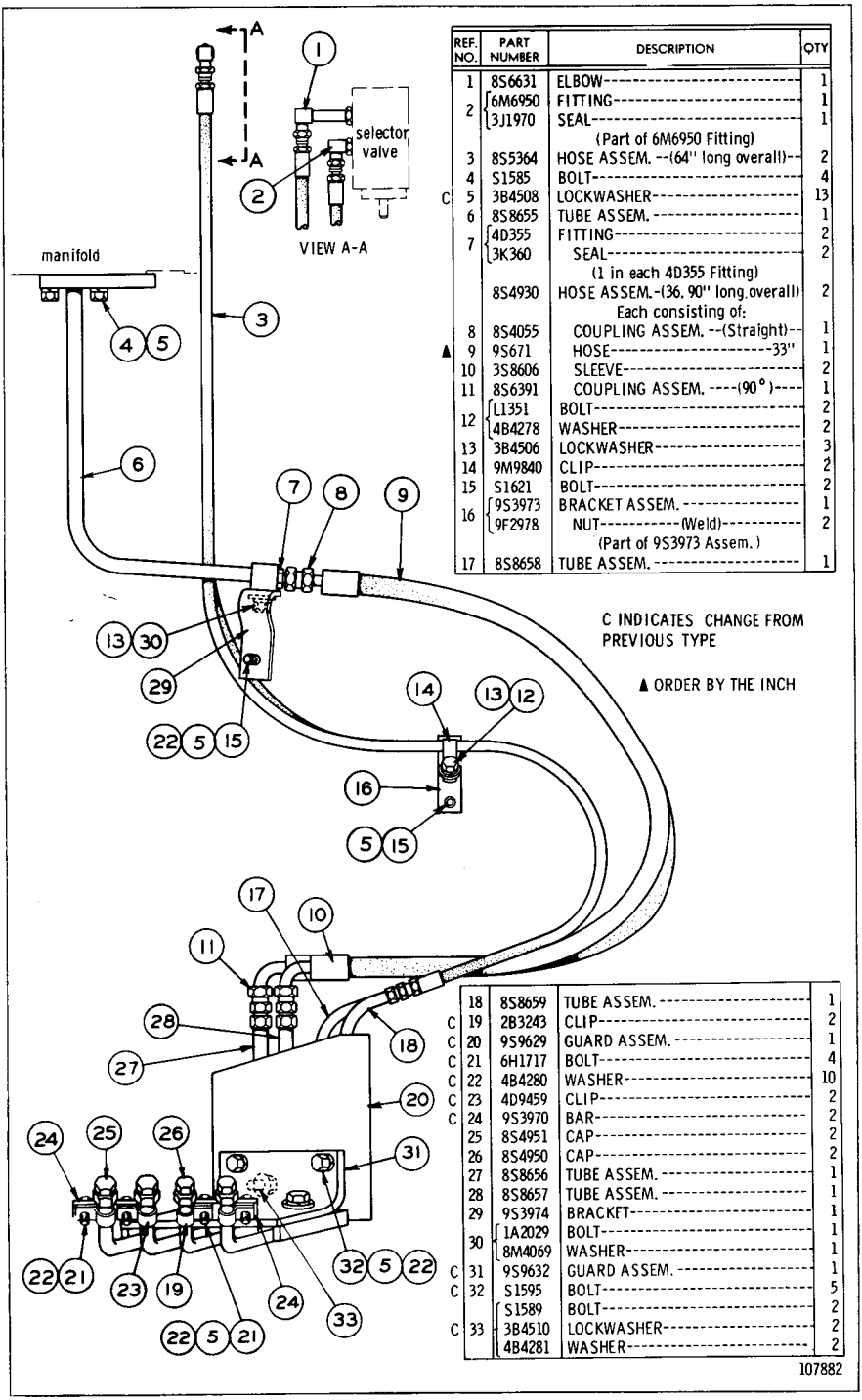

REF. NO.	PART NUMBER	DESCRIPTION	QTY
1	8S6631	ELBOW	1
2	6M6950	FITTING	1
	3J1970	SEAL	1
		(Part of 6M6950 Fitting)	
3	8S5364	HOSE ASSEM. --(64" long overall)--	2
4	S1585	BOLT	4
C 5	3B4508	LOCKWASHER	13
6	8S8655	TUBE ASSEM.	1
7	4D355	FITTING	2
	3K360	SEAL	2
		(1 in each 4D355 Fitting)	
	8S4930	HOSE ASSEM.-(36. 90" long.overall)	2
		Each consisting of:	
8	8S4055	COUPLING ASSEM. --(Straight)--	1
▲ 9	9S671	HOSE--33"	1
10	3S8606	SLEEVE	2
11	8S6391	COUPLING ASSEM. ----(90°)----	1
12	L1351	BOLT	2
	4B4278	WASHER	2
13	3B4506	LOCKWASHER	3
14	9M9840	CLIP	2
15	S1621	BOLT	2
16	9S3973	BRACKET ASSEM.	1
	9F2978	NUT--(Weld)	2
		(Part of 9S3973 Assem.)	
17	8S8658	TUBE ASSEM.	1

C INDICATES CHANGE FROM PREVIOUS TYPE

▲ ORDER BY THE INCH

18	8S8659	TUBE ASSEM.	1
C 19	2B3243	CLIP	2
C 20	9S9629	GUARD ASSEM.	1
C 21	6H1717	BOLT	4
C 22	4B4280	WASHER	10
C 23	4D9459	CLIP	2
C 24	9S3970	BAR	2
25	8S4951	CAP	2
26	8S4950	CAP	2
27	8S8656	TUBE ASSEM.	1
28	8S8657	TUBE ASSEM.	1
29	9S3974	BRACKET	1
30	1A2029	BOLT	1
	8M4069	WASHER	1
C 31	9S9632	GUARD ASSEM.	1
C 32	S1595	BOLT	5
	S1589	BOLT	2
C 33	3B4510	LOCKWASHER	2
	4B4281	WASHER	2

107882

8S6920 RIPPER BULLDOZER AND TILT LINES GROUP—Type 2

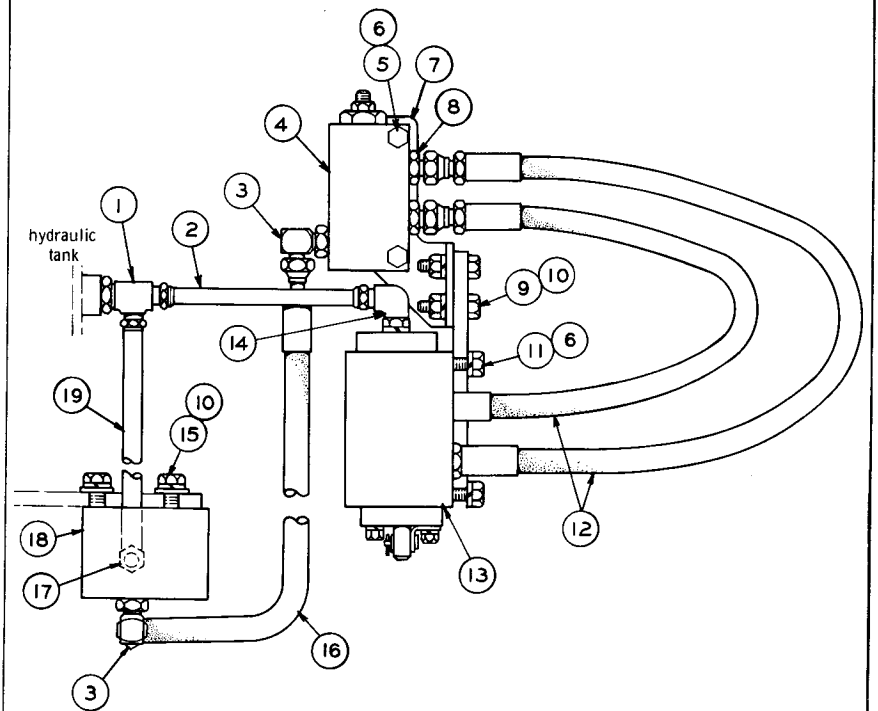

▲ ORDER BY THE FOOT

REF. NO.	PART NUMBER	DESCRIPTION	QTY
1	5K3705	FITTING	1
	5K2649	NUT	2
	5K2650	SLEEVE	2
	1J9671	SEAL	1
		(Parts of 5K3705 Fitting)	
▲ 2	4S8766	TUBE--------6.25"	
3	6M6950	FITTING	4
	3J1907	SEAL	4
		(1 in each 6M6950 Fitting)	
4	7J3767	VALVE GROUP	1
5	1D4538	BOLT	2
	1D4716	NUT	2
	4B4277	WASHER	2
6	3B4505	LOCKWASHER	6
7	9S4740	BRACKET	1
8	2R6806	CONNECTOR	2
	3J1907	SEAL	2
9	S1594	BOLT	2
	1D4717	NUT	2
10	3B4506	LOCKWASHER	4

REF. NO.	PART NUMBER	DESCRIPTION	QTY
11	2B2695	BOLT	4
12	8S8661	HOSE ASSEM. --(19" long overall)--	2
13	6J8001	VALVE GROUP	1
		(See Separate Illustration)	
14	5K3703	FITTING	1
	5K2649	NUT	1
	5K2650	SLEEVE	1
	1J9671	SEAL	1
		(Parts of 5K3703 Fitting)	
15	1A2029	BOLT	2
	4B4278	WASHER	2
16	8S6632	HOSE ASSEM. --(36" long overall)--	1
17	5K3702	FITTING	1
	5K2651	NUT	1
	5K2650	SLEEVE	1
	1J9671	SEAL	1
		(Parts of 5K3702 Fitting)	
18	6J8000	VALVE GROUP	1
		(See Separate Illustration)	
▲ 19	4S8766	TUBE--------36"	

124411

8S7014 PILOT LINES AND VALVE GROUP—Type 1
6J8000 & 6J8001 Valve parts are shown on Pages 30P and 31

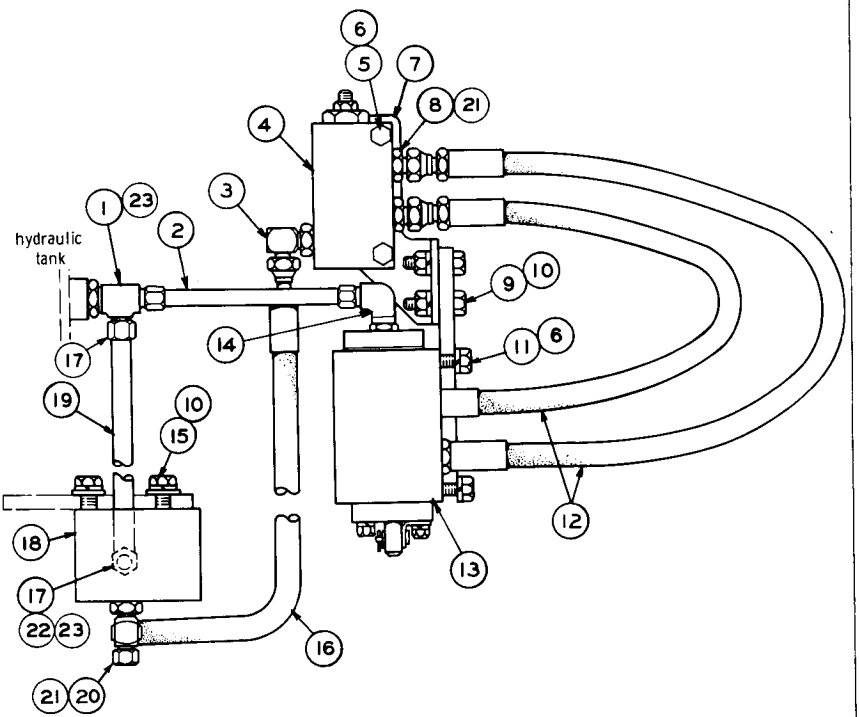

	REF. NO.	PART NUMBER	DESCRIPTION	QTY
C	1	1P270	TEE	1
▲	2	4S8766	TUBE-6.25"	
C	3	6M6950	FITTING	3
		3S1907	SEAL	1
	4	7J3767	VALVE GROUP	1
	5	1D4538	BOLT	2
		1D4716	NUT	2
		4B4277	WASHER	2
	6	3B4505	LOCKWASHER	6
	7	9S4740	BRACKET	1
	8	2R6806	CONNECTOR	2
	9	S1594	BOLT	2
		1D4717	NUT	2
	10	3B4506	LOCKWASHER	4
	11	2B2695	BOLT	4
	12	8S8661	HOSE ASSEM.-(19" long overall)	2
	13	6J8001	VALVE GROUP (Separate Illustration)	1
C	14	1P269	ELBOW	1
	15	1A2029	BOLT	2
		4B4278	WASHER	2
	16	8S6632	HOSE ASSEM.-(36" long overall)	1
C	17	1P266	NUT	4
C		1P267	SLEEVE	4
C		5K8649	INSERT	4
	18	6J8000	VALVE GROUP (Separate Illustration)	1
▲	19	4S8766	TUBE-36"	
C	20	6M6853	TEE	1
C		8S4950	CAP	1
C	21	3J1907	SEAL	3
C	22	1P268	CONNECTOR	1
C	23	1J9671	SEAL	3

C INDICATES CHANGE

A ORDER BY THE FOOT

138492

8S7014 PILOT LINES AND VALVE GROUP--Type 2
6J8000 & 6J8001 Valve parts are shown on Pages 30P and 31

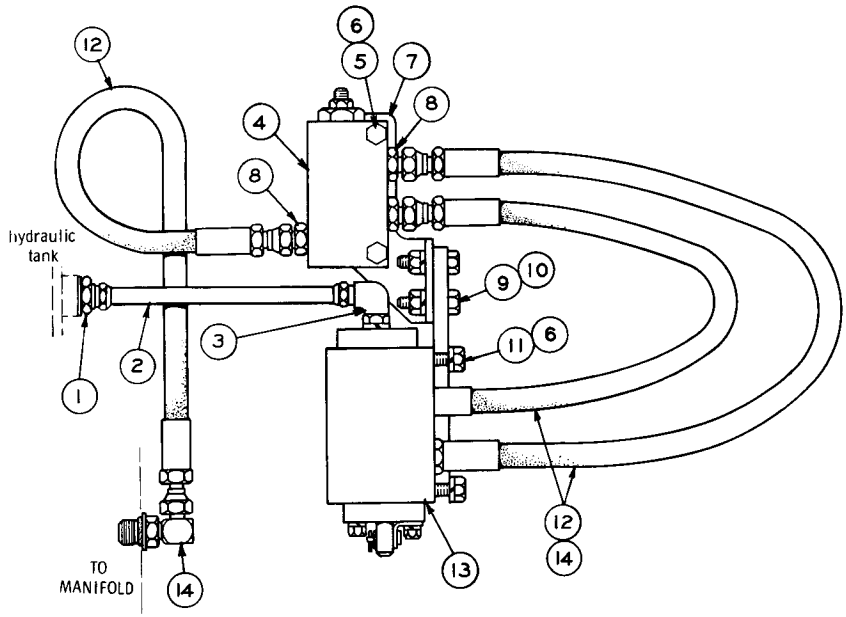

▲ ORDER BY THE FOOT

REF. NO.	PART NUMBER	DESCRIPTION	QTY
1	5K6186	FITTING	1
	5K2649	NUT	1
	5K2650	SLEEVE	1
		(Parts of 5K6186 Fitting)	
▲ 2	4S8766	TUBE --(.312" Outside Diameter)-7"	
3	5K3703	FITTING	1
	5K2649	NUT	1
	5K2650	SLEEVE	1
	1J9671	SEAL	1
		(Parts of 5K3703 Fitting)	
4	7J3767	VALVE ASSEM.	1
5	1D4538	BOLT	2
	1D4716	NUT	2
	4B4277	WASHER	2

REF. NO.	PART NUMBER	DESCRIPTION	QTY
6	3B4505	LOCKWASHER	6
7	9S4740	BRACKET	1
8	2R6806	CONNECTOR	3
	3J1907	SEAL	3
9	S1594	BOLT	2
	1D4717	NUT	2
10	3B4506	LOCKWASHER	2
11	2B2695	BOLT	4
12	8S8661	HOSE ASSEM.--(19" long overall)--	3
13	6J8001	VALVE GROUP	1
		(See Separate Illustration)	
14	6M6950	FITTING	3
	3J1907	SEAL	3
		(1 in each 6M6950 Fitting)	

107883

8S6919 PILOT LINES AND VALVE GROUP—Type 1
6J8001 Valve parts are shown on Pages 30P and 31

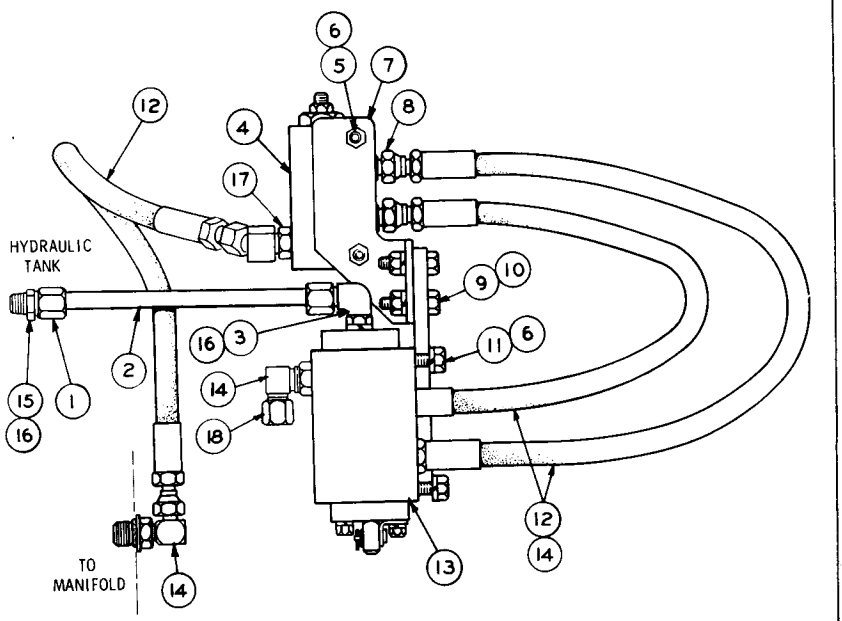

	REF. NO.	PART NUMBER	DESCRIPTION	QTY
C	1	1P266	NUT	1
C		1P267	SLEEVE	1
▲	2	5P752	TUBE-1.78 dm(7 in.)	
C		5K8649	INSERT	2
C	3	1P269	ELBOW	1
	4	7J3767	VALVE ASSEM.	1
	5	1D4538	BOLT	2
		1D4716	NUT	2
		4B4277	WASHER	2
	6	3B4505	LOCKWASHER	6
	7	9S4740	BRACKET	1

C	8	2R6806	CONNECTOR	2
		3J1907	SEAL	2
	9	S1594	BOLT	2
		1D4717	NUT	2
	10	3B4506	LOCKWASHER	2
	11	2B2695	BOLT	4
	12	8S8661	HOSE ASSEM.----48.26 cm(19 in.)	3
	13	6J8001	VALVE GROUP (Separate Illustration)	1
	14	6M6950	FITTING (Each Includes)	4
		3J1907	SEAL	1
C	15	1P268	CONNECTOR	1
C	16	1J9671	SEAL	2
C	17	307942	ELBOW	1
C		3J1907	SEAL	1
C	18	8S4950	CAP	1

C INDICATES CHANGE
▲ ORDER BY THE DECIMETRE

151119

8S6919 PILOT LINES AND VALVE GROUP—Type 2
6J8001 Valve parts are shown on Pages 30P and 31

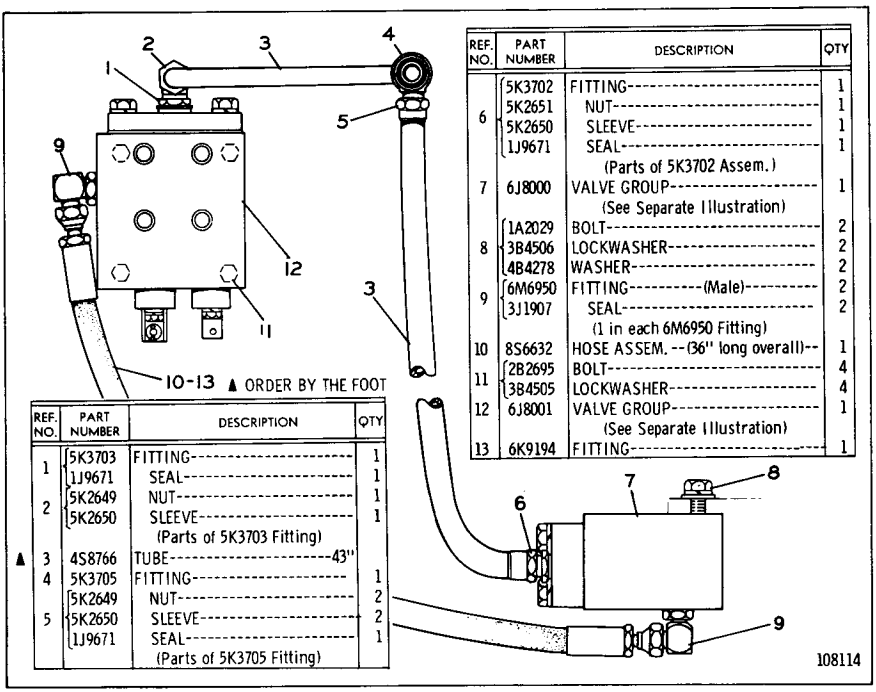

REF. NO.	PART NUMBER	DESCRIPTION	QTY
1	5K3703	FITTING	1
	1J9671	SEAL	1
2	5K2649	NUT	1
	5K2650	SLEEVE	1
		(Parts of 5K3703 Fitting)	
▲ 3	4S8766	TUBE-----43"	
4	5K3705	FITTING	1
5	5K2649	NUT	2
	5K2650	SLEEVE	2
	1J9671	SEAL	1
		(Parts of 5K3705 Fitting)	

REF. NO.	PART NUMBER	DESCRIPTION	QTY
6	5K3702	FITTING	1
	5K2651	NUT	1
	5K2650	SLEEVE	1
	1J9671	SEAL	1
		(Parts of 5K3702 Assem.)	
7	6J8000	VALVE GROUP	1
		(See Separate Illustration)	
8	1A2029	BOLT	2
	3B4506	LOCKWASHER	2
	4B4278	WASHER	2
9	6M6950	FITTING-----(Male)	2
	3J1907	SEAL	2
		(1 in each 6M6950 Fitting)	
10	8S6632	HOSE ASSEM. --(36" long overall)--	1
11	2B2695	BOLT	4
	3B4505	LOCKWASHER	4
12	6J8001	VALVE GROUP	1
		(See Separate Illustration)	
13	6K9194	FITTING	1

1P1562 PILOT LINES AND VALVE GROUP—Type 1
6J8000 & 6J8001 Valve parts are shown on Page 31

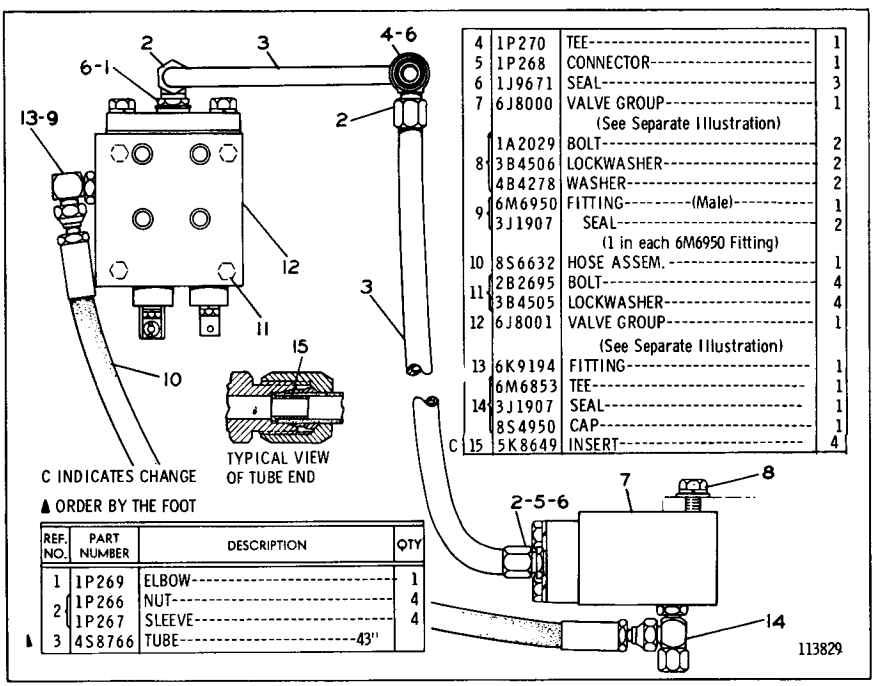

REF. NO.	PART NUMBER	DESCRIPTION	QTY
1	1P269	ELBOW	1
2	1P266	NUT	4
	1P267	SLEEVE	4
▲ 3	4S8766	TUBE-----43"	

REF. NO.	PART NUMBER	DESCRIPTION	QTY
4	1P270	TEE	1
5	1P268	CONNECTOR	1
6	1J9671	SEAL	3
7	6J8000	VALVE GROUP	1
		(See Separate Illustration)	
8	1A2029	BOLT	2
	3B4506	LOCKWASHER	2
	4B4278	WASHER	2
9	6M6950	FITTING-----(Male)	1
	3J1907	SEAL	2
		(1 in each 6M6950 Fitting)	
10	8S6632	HOSE ASSEM.	1
11	2B2695	BOLT	4
	3B4505	LOCKWASHER	4
12	6J8001	VALVE GROUP	1
		(See Separate Illustration)	
13	6K9194	FITTING	1
	6M6853	TEE	1
14	3J1907	SEAL	1
	8S4950	CAP	1
C 15	5K8649	INSERT	4

1P1562 PILOT LINES AND VALVE GROUP—Type 2
6J8000 & 6J8001 Valve parts are shown on Page 31

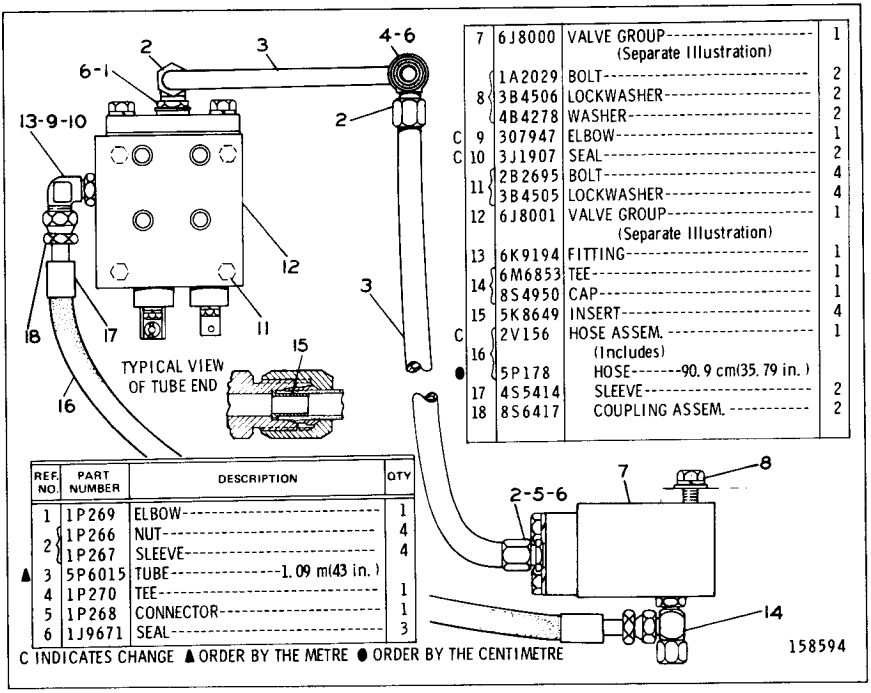

REF. NO.	PART NUMBER	DESCRIPTION	QTY
1	1P269	ELBOW	1
2	1P266	NUT	4
	1P267	SLEEVE	4
▲ 3	5P6015	TUBE--1.09 m(43 in.)	
4	1P270	TEE	1
5	1P268	CONNECTOR	1
6	1J9671	SEAL	3
7	6J8000	VALVE GROUP (Separate Illustration)	1
8	1A2029	BOLT	2
	3B4506	LOCKWASHER	2
	4B4278	WASHER	2
C 9	307947	ELBOW	1
C 10	3J1907	SEAL	2
11	2B2695	BOLT	4
	3B4505	LOCKWASHER	4
12	6J8001	VALVE GROUP (Separate Illustration)	1
13	6K9194	FITTING	1
14	6M6853	TEE	1
	8S4950	CAP	1
15	5K8649	INSERT	4
C 16	2V156	HOSE ASSEM. (Includes)	1
●	5P178	HOSE--90.9 cm(35.79 in.)	
17	4S5414	SLEEVE	2
18	8S6417	COUPLING ASSEM.	2

C INDICATES CHANGE ▲ ORDER BY THE METRE ● ORDER BY THE CENTIMETRE

1P1562 PILOT LINES AND VALVE GROUP—Type 3
Field Installation
6J8000 & 6J8001 Valve parts are shown on Page 31

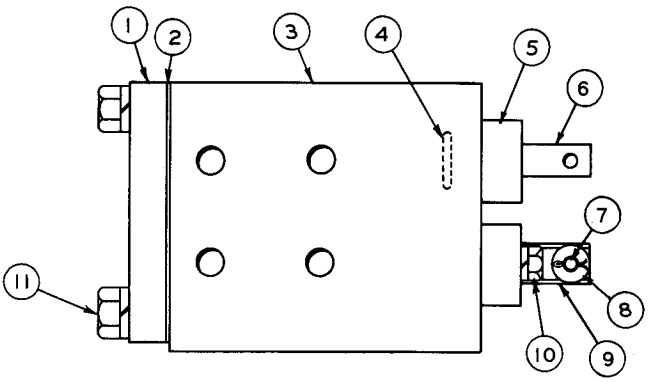

REF. NO.	PART NUMBER	DESCRIPTION	QTY
1	6J8366	COVER	1
2	6J8368	GASKET	1
3	6J8370	BODY	1
4	8F9206	SEAL	2
5	6J8367	HOUSING	2
6	6J8369	STEM	2
7	3B4605	COTTER PIN	1
	8S5278	PIN	1

REF. NO.	PART NUMBER	DESCRIPTION	QTY
8	4B4274	WASHER	1
9	7J233	BRACKET	1
10	S1616	BRACKET	4
	3B4504	LOCKWASHER	4
11	S1618	BOLT	2
	3B4505	LOCKWASHER	2

107886

6J8001 PILOT VALVE GROUP—Type 1
Part of 8S7014, 8S6919 and 1P1562 Pilot Lines and Valve Groups shown on Pages 30L, 30L-1, 30L-2, 30M and 30N

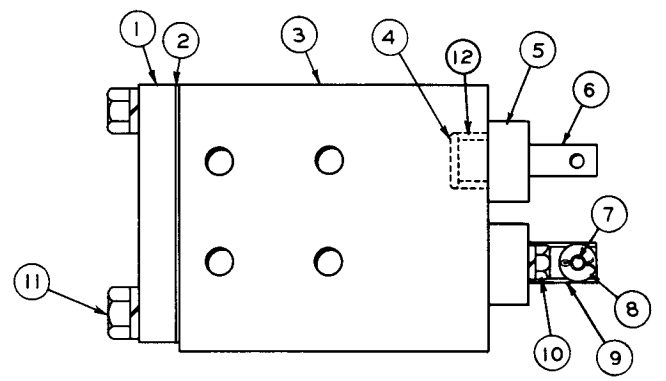

C INDICATES CHANGE FROM PREVIOUS TYPE

	REF. NO.	PART NUMBER	DESCRIPTION	QTY
	1	6J8366	COVER	1
	2	6J8368	GASKET	1
C	3	7J6006	BODY	1
C	4	8M4447	SEAL	2
	5	6J8367	HOUSING	2
	6	6J8369	STEM	2
	7	3B4605	COTTER PIN	1
		8S5278	PIN	1

	REF. NO.	PART NUMBER	DESCRIPTION	QTY
	8	4B4274	WASHER	1
	9	7J233	BRACKET	1
	10	S1616	BRACKET	4
		3B4504	LOCKWASHER	4
	11	S1618	BOLT	2
		3B4505	LOCKWASHER	2
C	12	7J6005	SPACER	2

128967

6J8001 PILOT VALVE GROUP—Type 2
Part of 8S7014, 8S6919, 1P1562 Pilot Lines and Valve Groups shown on Pages 30L, 30L-1, 30L-2, 30M and 30N

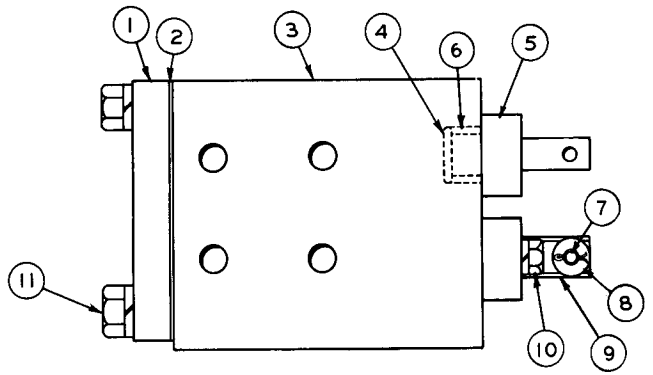

	REF. NO.	PART NUMBER	DESCRIPTION	QTY
	1	6J8366	COVER	1
	2	6J8368	GASKET	1
C	3	8J6092	VALVE GROUP	1
	4	8M4447	SEAL	2
	5	6J8367	HOUSING	2
	6	7J6005	SPACER	2
	7	3B4605	COTTER PIN	1
		8S5278	PIN	1
	8	4B4274	WASHER	1
	9	7J233	BRACKET	1
	10	S1616	BRACKET	4
		3B4504	LOCKWASHER	4
	11	S1618	BOLT	2
		3B4505	LOCKWASHER	2

C INDICATES CHANGE

138238

6J8001 PILOT VALVE GROUP—Type 3
Part of 8S7014, 8S6919 & 1P1562 Pilot Lines and Valve Groups
shown on Pages 30L, 30L-1, 30L-2, 30M and 30N

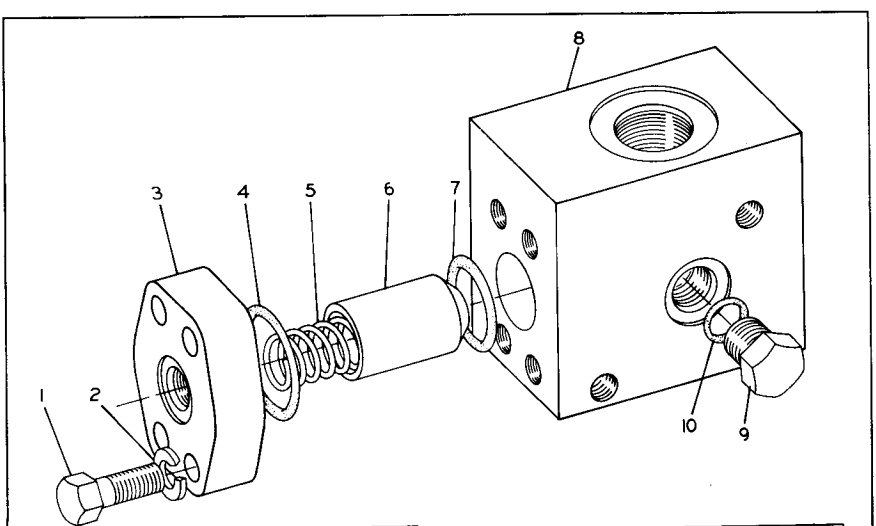

REF. NO.	PART NUMBER	DESCRIPTION	QTY
1	3B1915	BOLT	4
2	3B4506	LOCKWASHER	4
3	6J8015	COVER	1
4	6F6673	SEAL	1
5	1S3219	SPRING	1
6	6J8889	VALVE	1
7	5F1678	SEAL	1
8	6J8014	BODY	1
9	9S4191	PLUG	2
10	3J1907	SEAL	2

113832

6J8000 RESTRICTOR VALVE GROUP
Part of 8S7014 & 1P1562 Pilot Lines and Valve Groups
shown on Pages 30L, 30L-1 and 30N

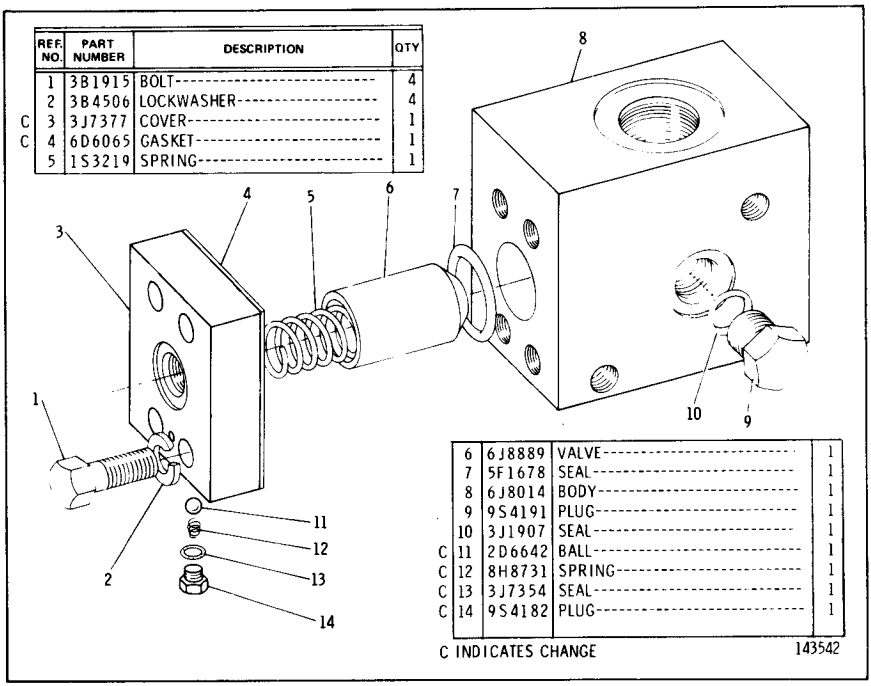

	REF. NO.	PART NUMBER	DESCRIPTION	QTY
	1	3B1915	BOLT	4
	2	3B4506	LOCKWASHER	4
C	3	3J7377	COVER	1
C	4	6D6065	GASKET	1
	5	1S3219	SPRING	1
	6	6J8889	VALVE	1
	7	5F1678	SEAL	1
	8	6J8014	BODY	1
	9	9S4191	PLUG	1
	10	3J1907	SEAL	1
C	11	2D6642	BALL	1
C	12	8H8731	SPRING	1
C	13	3J7354	SEAL	1
C	14	9S4182	PLUG	1

C INDICATES CHANGE 143542

6J8000 RESTRICTOR VALVE GROUP–Type 2
Part of 8S7014 & 1P1562 Pilot Lines and Valve Groups shown on Pages 30L, 30L-1 and 30N

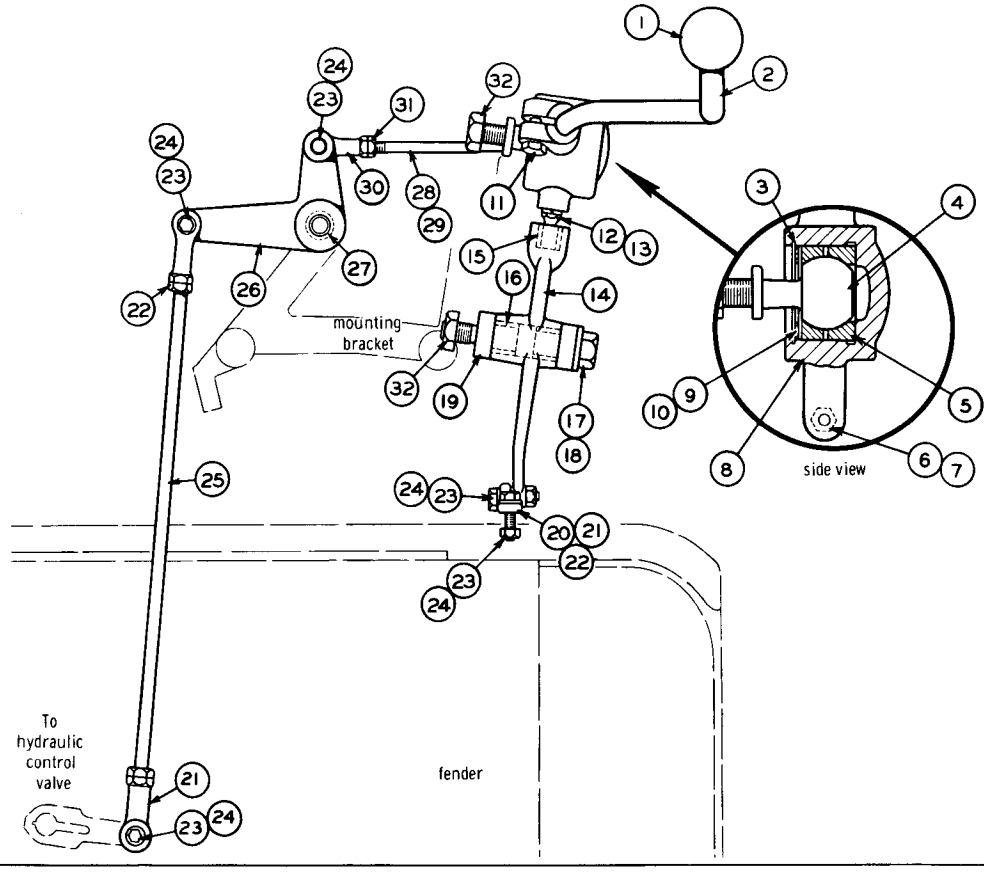

REF NO	PART NUMBER	DESCRIPTION	QTY
1	2A1736	HANDLE	1
2	5J5010	LEVER	1
3	2D6648	RING	1
4	5J3537	STUD	1
5	5J3533	BEARING	2
6	1B4203	NUT	1
7	3B4506	LOCKWASHER	1
8	5J3534	HOUSING	1
9	5J7364	WASHER	1
10	5J7363	SHIM	5
11	7B3235	BOLT	1
12	4J9513	BALL	1
13	3B4508	LOCKWASHER	1
14	5J8914	BELLCRANK ASSEM.	1
15	5J3538	BEARING	1
16	8H8175	BEARING	2
		(Parts of Bellcrank Assem. 5J8914)	
17	5J3544	BOLT	1
18	5J4042	WASHER	1
19	5J5326	WASHER	2
20	5J3675	ROD ASSEM.	1
21	4D4064	END	4
22	5B9079	NUT	4
		(2 in Rod Assem. 5J3675 & 5J3678)	
23	S-1588	BOLT	5
24	1B2578	NUT	5
25	5J3678	ROD ASSEM.	1
26	5J3588	BELLCRANK ASSEM.	1
27	8H8175	BEARING	2
		(Part of Bellcrank Assem. 5J3588)	
28	5J4685	ROD ASSEM.	1
29	5J5315	END	1
30	4D4064	END	1
31	5B9079	NUT	2
		(Parts of Rod Assem. 5J4685)	
32	1D5118	NUT	2

5J3996 BULLDOZER CONTROL LINKAGE GROUP—Top View—Type 1

5J3996 BULLDOZER CONTROL LINKAGE GROUP—Top View—Type 2

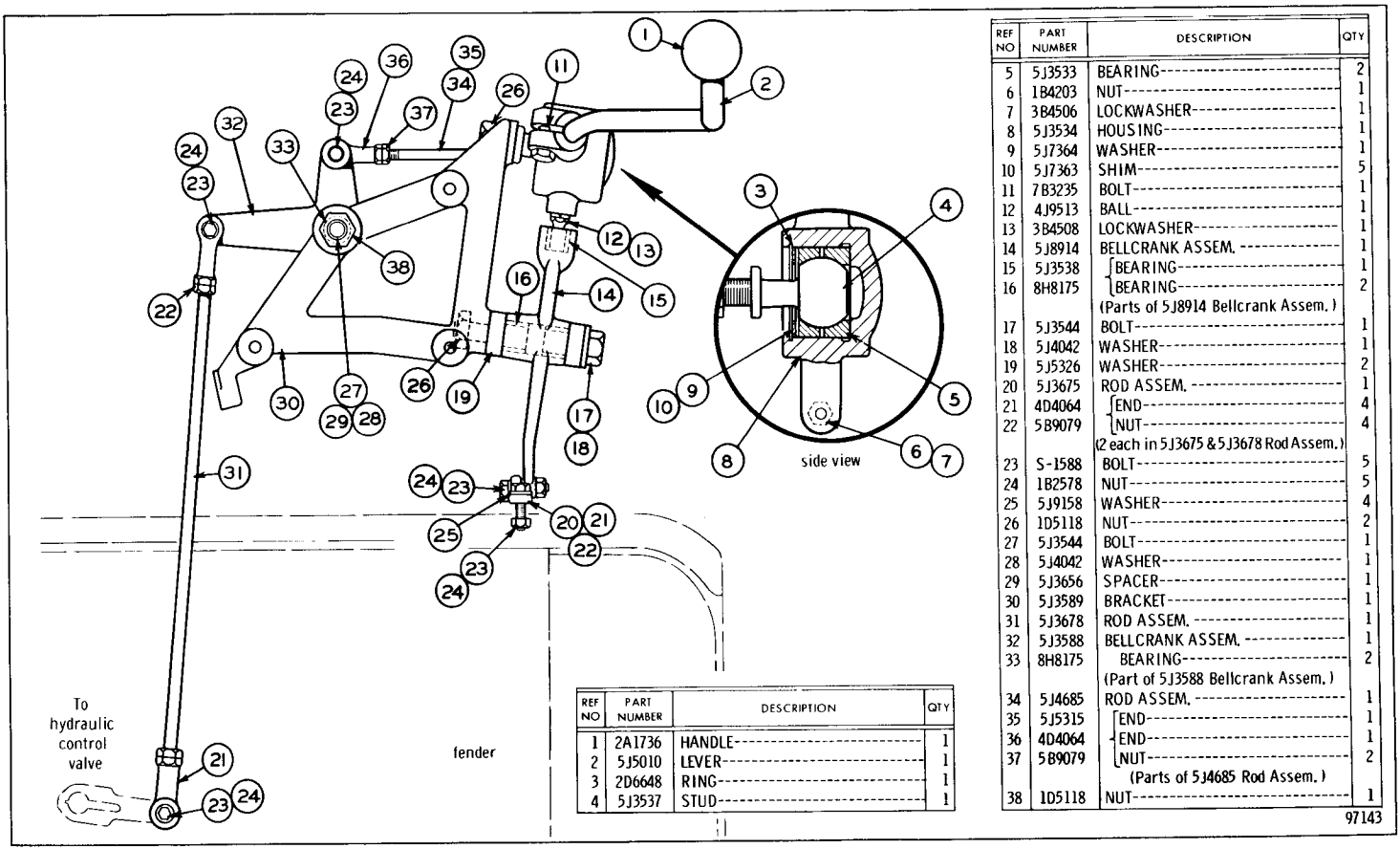

REF NO	PART NUMBER	DESCRIPTION	QTY
5	5J3533	BEARING	2
6	1B4203	NUT	1
7	3B4506	LOCKWASHER	1
8	5J3534	HOUSING	1
9	5J7364	WASHER	1
10	5J7363	SHIM	5
11	7B3235	BOLT	1
12	4J9513	BALL	1
13	3B4508	LOCKWASHER	1
14	5J8914	BELLCRANK ASSEM.	1
15	5J3538	BEARING	1
16	8H8175	BEARING	2
		(Parts of 5J8914 Bellcrank Assem.)	
17	5J3544	BOLT	1
18	5J4042	WASHER	1
19	5J5326	WASHER	2
20	5J3675	ROD ASSEM.	1
21	4D4064	END	4
22	5B9079	NUT	4
		(2 each in 5J3675 & 5J3678 Rod Assem.)	
23	S-1588	BOLT	5
24	1B2578	NUT	5
25	5J9158	WASHER	4
26	1D5118	NUT	2
27	5J3544	BOLT	1
28	5J4042	WASHER	1
29	5J3656	SPACER	1
30	5J3589	BRACKET	1
31	5J3678	ROD ASSEM.	1
32	5J3588	BELLCRANK ASSEM.	1
33	8H8175	BEARING	2
		(Part of 5J3588 Bellcrank Assem.)	
34	5J4685	ROD ASSEM.	1
35	5J5315	END	1
36	4D4064	END	1
37	5B9079	NUT	2
		(Parts of 5J4685 Rod Assem.)	
38	1D5118	NUT	1

REF NO	PART NUMBER	DESCRIPTION	QTY
1	2A1736	HANDLE	1
2	5J5010	LEVER	1
3	2D6648	RING	1
4	5J3537	STUD	1

97143

ONLY "CATERPILLAR" PARTS GIVE "CATERPILLAR" PERFORMANCE

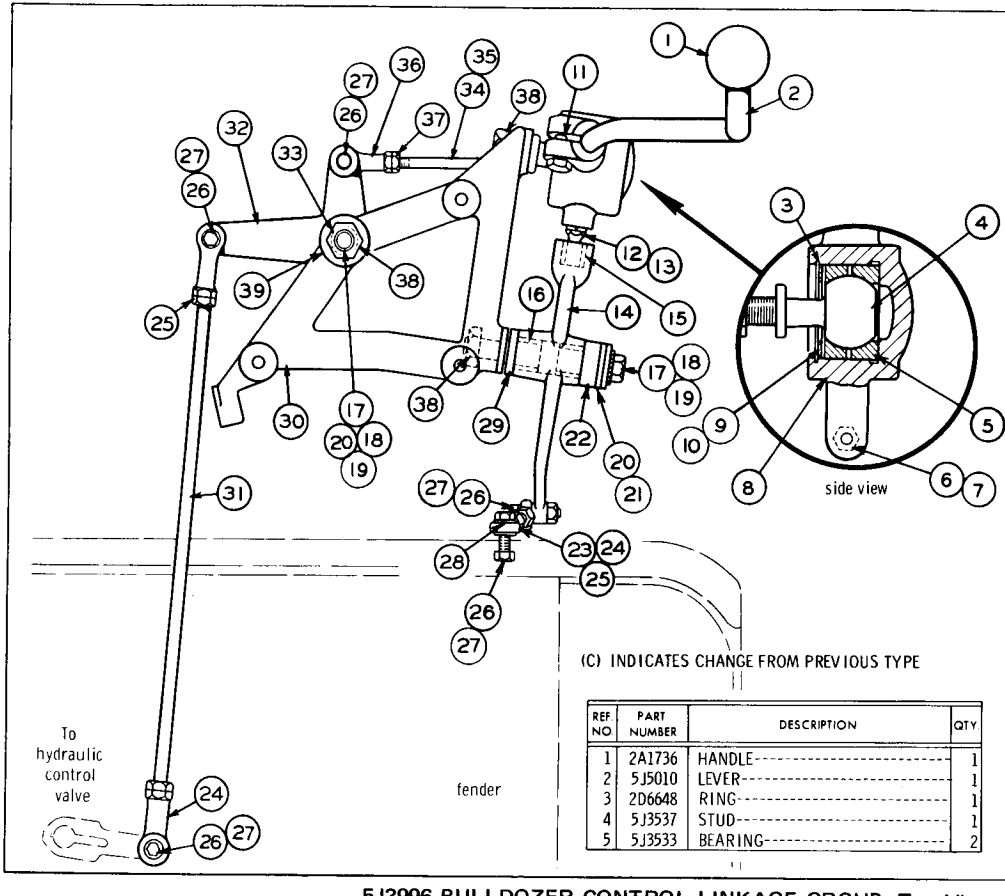

REF NO.	PART NUMBER	DESCRIPTION	QTY
6	1B4203	NUT	1
7	3B4506	LOCKWASHER	1
8	5J3534	HOUSING	1
9	5J7364	WASHER	1
10	5J7363	SHIM	5
11	7B3235	BOLT	1
12	4J9513	BALL	1
13	3B4508	LOCKWASHER	1
14	5J8914	BELLCRANK ASSEM.	1
15	5J3538	BEARING	1
16	8H8175	BEARING	2
		(Parts of 5J8914 Bellcrank Assem.)	
(C) 17	S-1621	BOLT	2
(C) 18	3J4818	LOCKWASHER	2
(C) 19	1J8965	WASHER--(.531" inside diameter)	2
(C) 20	5S8737	SHAFT	2
21	5J4042	WASHER--(.766" inside diameter)	1
22	5J5326	WASHER	1
23	5J3675	ROD ASSEM.	1
24	4D4064	END	4
25	5B9079	NUT	4
		(2 in each 5J3675 & 5J3678 Rod Assem.)	
26	S-1588	BOLT	5
27	1B2578	NUT	5
28	5J9158	WASHER	4
(C) 29	2J528	WASHER	1
30	5J3589	BRACKET	1
31	5J3678	ROD ASSEM.	1
32	5J3588	BELLCRANK ASSEM.	1
33	8H8175	BEARING	2
		(Part of 5J3588 Bellcrank Assem.)	
34	5J4685	ROD ASSEM.	1
35	5J5315	END	1
36	4D4064	END	1
37	5B9079	NUT	2
		(Parts of 5J4685 Rod Assem.)	
38	1D5118	NUT	3
39	5J3656	SPACER	1

(C) INDICATES CHANGE FROM PREVIOUS TYPE

REF NO.	PART NUMBER	DESCRIPTION	QTY
1	2A1736	HANDLE	1
2	5J5010	LEVER	1
3	2D6648	RING	1
4	5J3537	STUD	1
5	5J3533	BEARING	2

120563

5J3996 BULLDOZER CONTROL LINKAGE GROUP—Top View—Type 3

5J4391 BULLDOZER CONTROL LINKAGE GROUP—Top View—Type 1

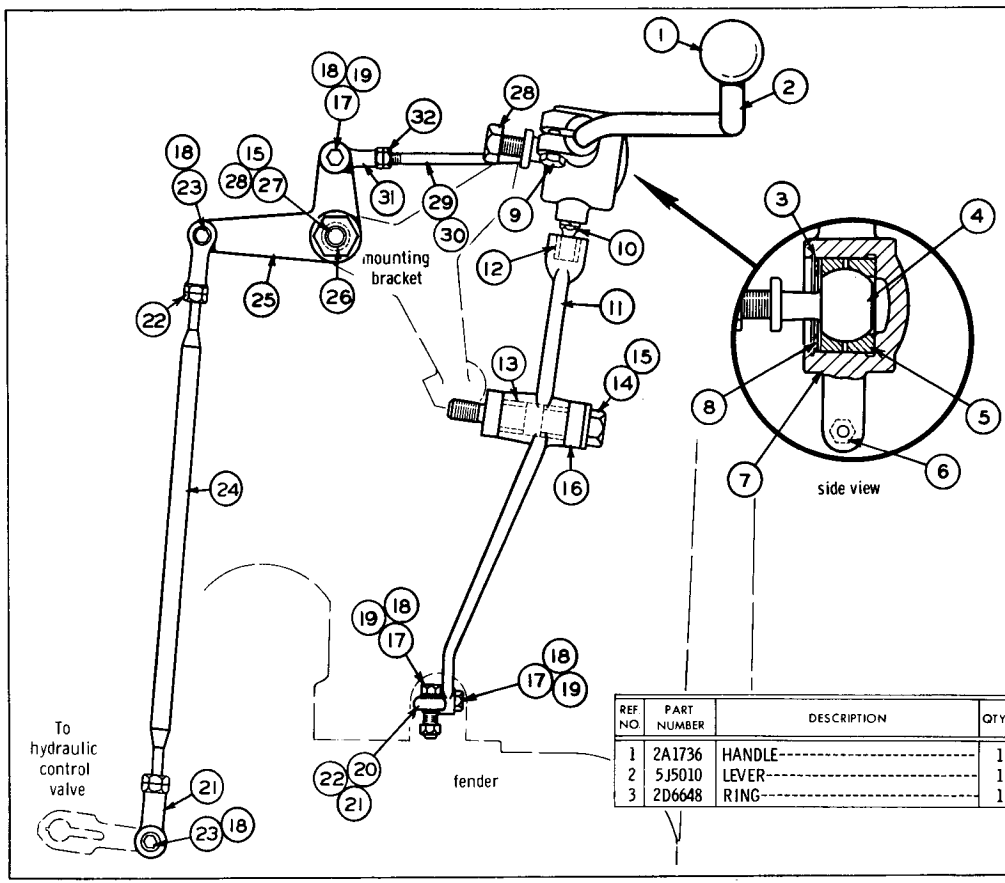

REF. NO.	PART NUMBER	DESCRIPTION	QTY
4	5J3537	STUD	1
5	5J3533	BEARING	2
6	1B4203	NUT	1
	3B4506	LOCKWASHER	1
7	5J3534	HOUSING	1
8	5J7364	WASHER	1
	5J7363	SHIM	5
9	7B3235	BOLT	1
10	4J9513	BALL—(Screw)	1
	3B4508	LOCKWASHER	1
11	5J9382	BELLCRANK ASSEM.	1
12	5J3538	BEARING	1
13	8H8175	BEARING	2
		(Parts of 5J9382 Bellcrank Assem.)	
14	5J3544	BOLT	1
15	5J4042	WASHER	2
16	5J5326	WASHER	2
17	3B1915	BOLT	3
18	1B2578	NUT	5
19	5J9158	WASHER	6
20	5J3675	ROD ASSEM.	1
21	4D4064	END	4
22	5B9079	NUT	4
		(2 each in 5J3675 & 5J4686 Rod Assem.)	
23	S-1588	BOLT	2
24	5J4686	ROD ASSEM.	1
25	5J4574	BELLCRANK ASSEM.	1
26	8H8175	BEARING	2
		(Part of 5J4574 Bellcrank Assem.)	
27	5J3543	BOLT	1
28	1D5118	NUT	2
29	5J4685	ROD ASSEM.	1
30	5J5315	END	1
31	4D4064	END	1
32	5B9079	NUT	2
		(Parts of 5J4685 Rod Assem.)	

REF. NO.	PART NUMBER	DESCRIPTION	QTY
1	2A1736	HANDLE	1
2	5J5010	LEVER	1
3	2D6648	RING	1

120570

ONLY "CATERPILLAR" PARTS GIVE "CATERPILLAR" PERFORMANCE

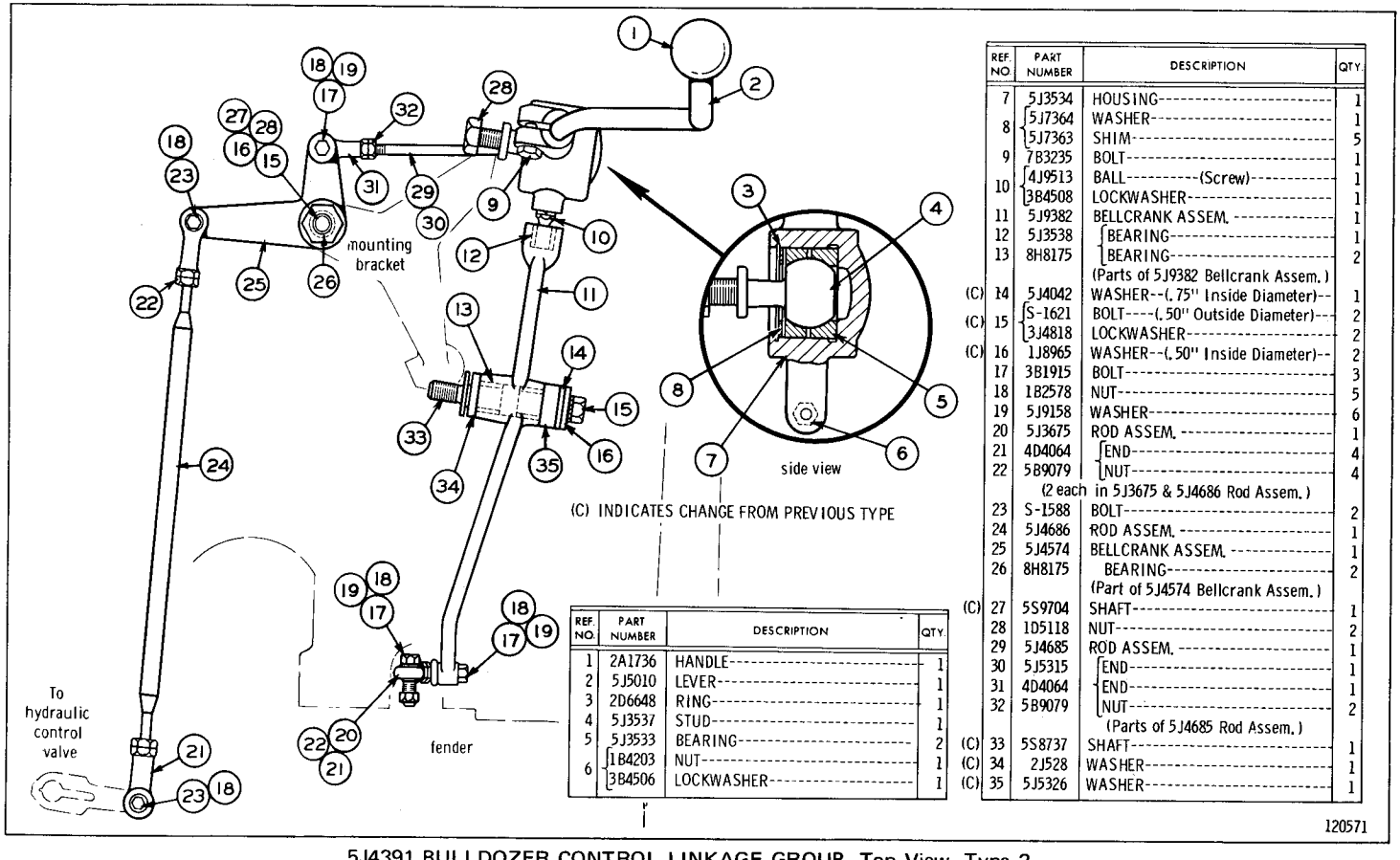

REF. NO.	PART NUMBER	DESCRIPTION	QTY.
1	2A1736	HANDLE	1
2	5J5010	LEVER	1
3	2D6648	RING	1
4	5J3537	STUD	1
5	5J3533	BEARING	2
6	1B4203	NUT	1
	3B4506	LOCKWASHER	1

REF. NO.	PART NUMBER	DESCRIPTION	QTY.
7	5J3534	HOUSING	1
8	5J7364	WASHER	1
	5J7363	SHIM	5
9	7B3235	BOLT	1
10	4J9513	BALL----------(Screw)	1
	3B4508	LOCKWASHER	1
11	5J9382	BELLCRANK ASSEM.	1
12	5J3538	BEARING	1
13	8H8175	BEARING	2
		(Parts of 5J9382 Bellcrank Assem.)	
(C) 14	5J4042	WASHER--(.75" Inside Diameter)	1
(C) 15	S-1621	BOLT----(.50" Outside Diameter)	2
	3J4818	LOCKWASHER	2
(C) 16	1J8965	WASHER--(.50" Inside Diameter)	2
17	3B1915	BOLT	3
18	1B2578	NUT	5
19	5J9158	WASHER	6
20	5J3675	ROD ASSEM.	1
21	4D4064	END	4
22	5B9079	NUT	4
		(2 each in 5J3675 & 5J4686 Rod Assem.)	
23	S-1588	BOLT	2
24	5J4686	ROD ASSEM.	1
25	5J4574	BELLCRANK ASSEM.	1
26	8H8175	BEARING	2
		(Part of 5J4574 Bellcrank Assem.)	
(C) 27	5S9704	SHAFT	1
28	1D5118	NUT	2
29	5J4685	ROD ASSEM.	1
30	5J5315	END	1
31	4D4064	END	1
32	5B9079	NUT	2
		(Parts of 5J4685 Rod Assem.)	
(C) 33	5S8737	SHAFT	1
(C) 34	2J528	WASHER	1
(C) 35	5J5326	WASHER	1

5J4391 BULLDOZER CONTROL LINKAGE GROUP—Top View—Type 2

7S4766 BULLDOZER CONTROL LINKAGE GROUP—As Viewed from Right Hand Side of Tractor

REF. NO.	PART NUMBER	DESCRIPTION	QTY
1	1D4717	NUT	6
2	3B4506	LOCKWASHER	5
3	4M497	NUT	1
4	4M496	BOLT	1
	5J3675	ROD ASSEM.	1
		Consisting of:	
5	4D4064	ROD END	2
6	5B9079	NUT	2
7	4D9589	ROD	1
8	L1351	BOLT	4
9	7B3235	BOLT	1
10	2A1736	HANDLE	1
11	9S2055	LEVER	1
12	7S4724	LEVER ASSEM.	1
13	8H8175	BEARING (Part of 7S4724 Lever Assem.)	2
14	7S4727	BELLCRANK ASSEM.	1
15	8H8175	BEARING (Part of 7S4727 Bellcrank Assem.)	2
16	3B1915	BOLT	5
	7S4730	ROD ASSEM.	1
		Consisting of:	
17	4D4064	ROD END	2
18	5B9079	NUT	2
19	5H5547	ROD	1
20	2L1699	PIN	3

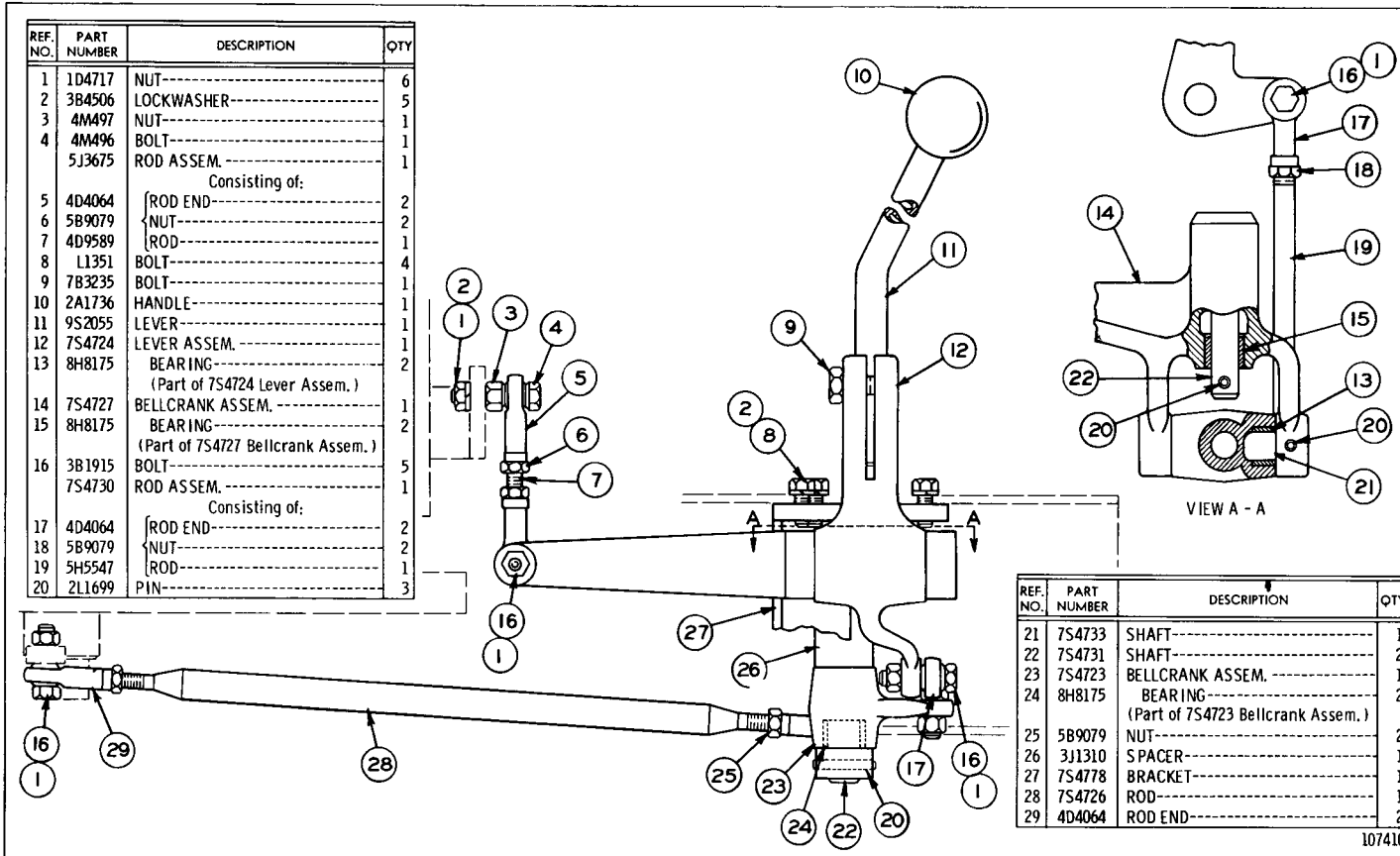

REF. NO.	PART NUMBER	DESCRIPTION	QTY
21	7S4733	SHAFT	1
22	7S4731	SHAFT	2
23	7S4723	BELLCRANK ASSEM.	1
24	8H8175	BEARING (Part of 7S4723 Bellcrank Assem.)	2
25	5B9079	NUT	2
26	3J1310	SPACER	1
27	7S4778	BRACKET	1
28	7S4726	ROD	1
29	4D4064	ROD END	2

107410

ONLY "CATERPILLAR" PARTS GIVE "CATERPILLAR" PERFORMANCE

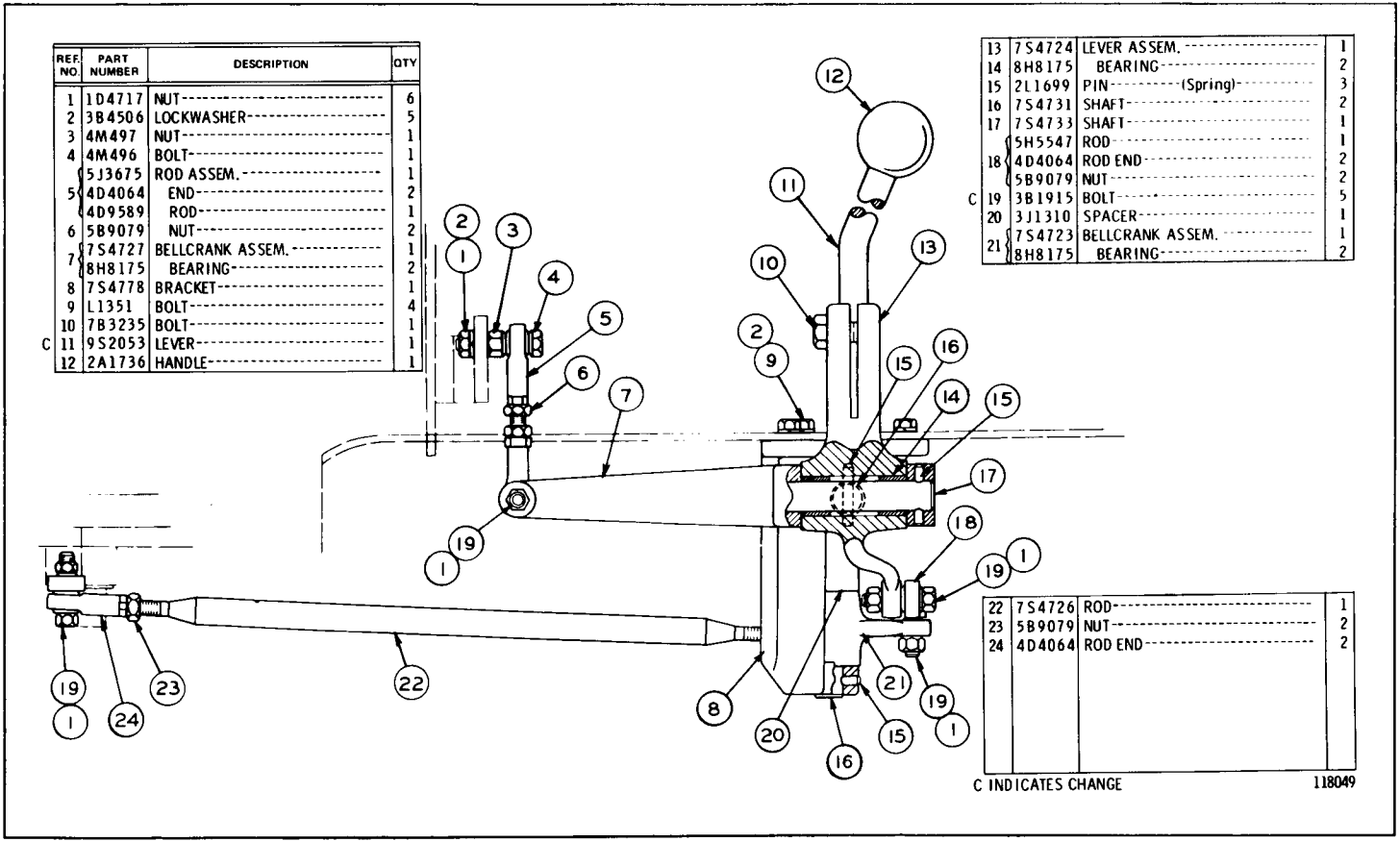

REF. NO.	PART NUMBER	DESCRIPTION	QTY
1	1D4717	NUT	6
2	3B4506	LOCKWASHER	5
3	4M497	NUT	1
4	4M496	BOLT	1
5	5J3675	ROD ASSEM.	1
	4D4064	END	2
	4D9589	ROD	1
6	5B9079	NUT	2
7	7S4727	BELLCRANK ASSEM.	1
	8H8175	BEARING	2
8	7S4778	BRACKET	1
9	L1351	BOLT	4
10	7B3235	BOLT	1
C 11	9S2053	LEVER	1
12	2A1736	HANDLE	1

13	7S4724	LEVER ASSEM.	1
14	8H8175	BEARING	2
15	2L1699	PIN (Spring)	3
16	7S4731	SHAFT	2
17	7S4733	SHAFT	1
18	5H5547	ROD	1
	4D4064	ROD END	2
	5B9079	NUT	2
C 19	3B1915	BOLT	5
20	3J1310	SPACER	1
21	7S4723	BELLCRANK ASSEM.	1
	8H8175	BEARING	2

22	7S4726	ROD	1
23	5B9079	NUT	2
24	4D4064	ROD END	2

C INDICATES CHANGE

118049

7S4765 BULLDOZER AND TILT LINKAGE GROUP—As Viewed from Right Hand Side of Tractor

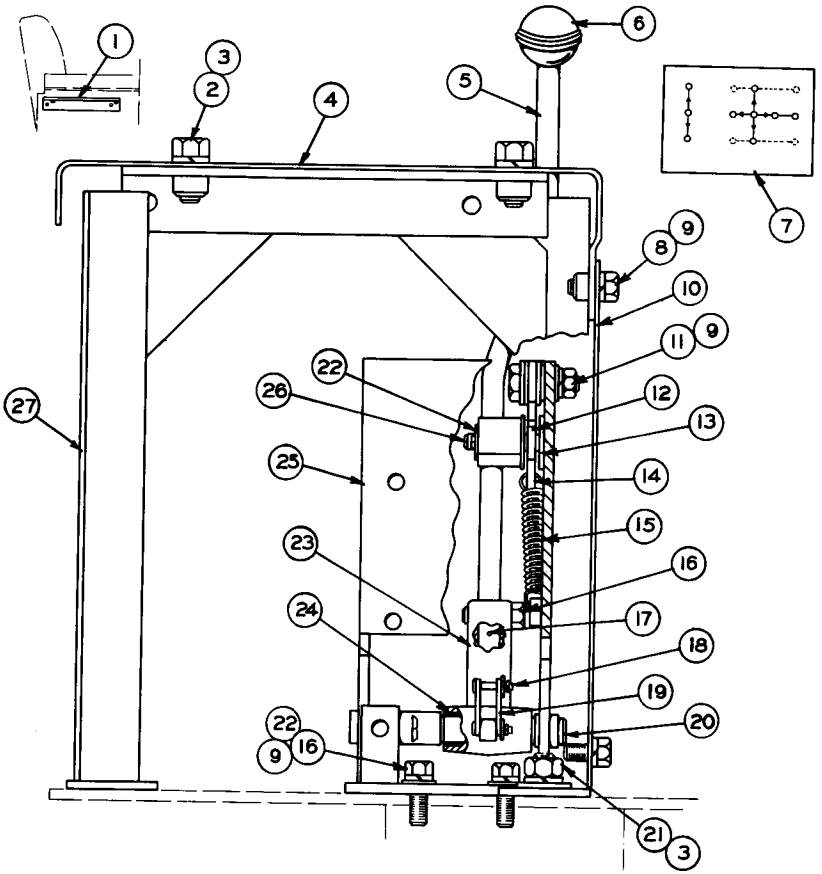

REF. NO.	PART NUMBER	DESCRIPTION	QTY
1	5J4237	ANGLE ASSEM.	1
	1F748	NUT----------(Weld)----------	2
		(Part of 5J4237 Angle Assem.)	
2	S1620	BOLT----------	4
3	3B4508	LOCKWASHER----------	5
4	8S5284	SUPPORT ASSEM.	1
	9F2978	NUT----------(Weld)----------	3
		(Part of 8S5284 Support Assem.)	
5	8S5276	LEVER ASSEM.	1
6	7F8092	KNOB----------	1
7	9S3223	FILM----------	1
8	S509	BOLT----------	5
9	3B4506	LOCKWASHER----------	9
10	8S5282	COVER----------	1
11	4B2650	BOLT----------	1
	1D4717	NUT----------	1
	6B7949	WASHER----------	2
	T883	WASHER----------	3
12	9S2695	ROLLER----------	1
13	L1319	WASHER----------	2

REF. NO.	PART NUMBER	DESCRIPTION	QTY
14	8S5279	RATCHET----------	1
15	1S6889	SPRING----------	1
16	1A2029	BOLT----------	4
17	3K4897	PIN----------	1
18	8S5278	PIN----------	2
	4B4274	WASHER----------	2
	3B4604	COTTER PIN----------	2
19	8S5259	LINK----------	2
20	5F2802	PIN----------	1
	3B4617	COTTER PIN----------	1
21	1D4719	NUT----------	1
	7F502	WASHER----------	1
22	4B4278	WASHER----------	4
23	8S5199	LEVER ASSEM.	1
24	4H2610	BEARING----------	2
		(Part of 8S5199 Lever Assem.)	
25	8S5285	BRACKET ASSEM.	1
26	L1020	PIN----------	1
	3B4615	COTTER PIN----------	2
27	8S5281	SUPPORT ASSEM.	1

124408

8S4480 RIPPER BULLDOZER AND LINKAGE AND CONSOLE GROUP—Type 1 AS VIEWED FROM RIGHT HAND SIDE OF TRACTOR

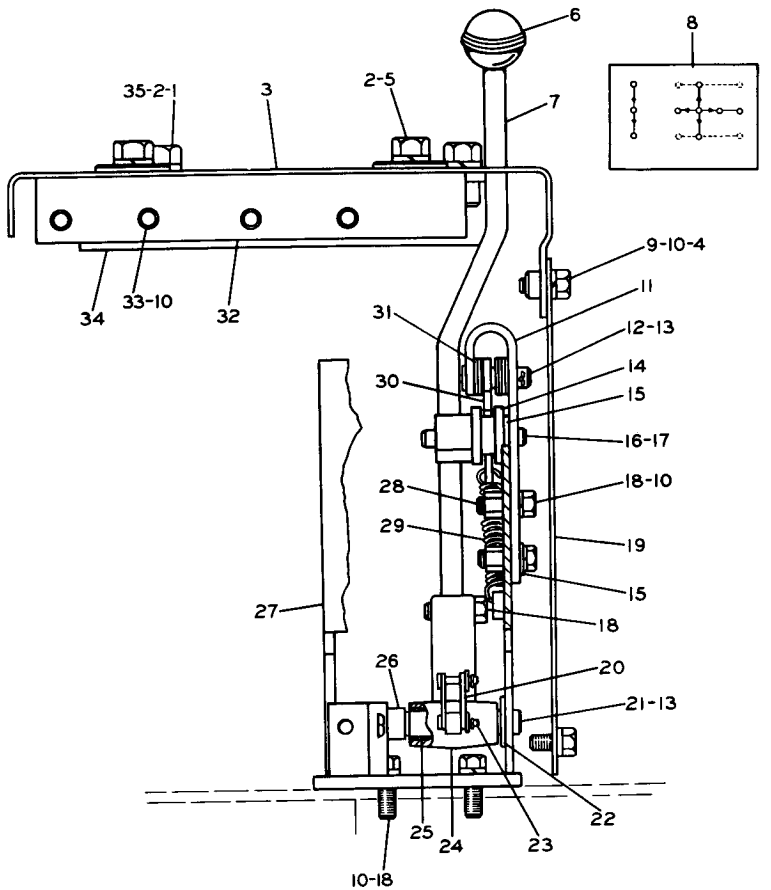

	REF. NO.	PART NUMBER	DESCRIPTION	QTY
	1	S1620	BOLT	2
C	2	3B4508	LOCKWASHER	4
	3	8S5284	COVER ASSEM.	1
	4	9F2978	NUT	3
C	5	S1595	BOLT	2
C		9S8337	WASHER	2
	6	7F8092	KNOB	1
	7	8S5276	LEVER ASSEM.	1
	8	9S3223	FILM	1
	9	S509	BOLT	5
C	10	3B4506	LOCKWASHER	14
C	11	9S8259	BRACKET	1
C	12	8B1419	PIN	1
C	13	3B4617	COTTER PIN	2
C	14	9S8341	ROLLER	1
C		4J1105	SHIM	1
	15	4B4278	WASHER	2
C	16	9S1397	PIN	1
	17	3B4615	COTTER PIN	2
C	18	1A2029	BOLT	6
	19	8S5282	COVER	1
	20	8S5259	LINK	2
	21	5F2802	PIN	1
C	22	V531	WASHER	1
	23	8S5278	PIN	2
		4B4274	WASHER	2
		3B4604	COTTER PIN	2
	24	8S5199	LEVER ASSEM.	1
	25	4H2610	BEARING	1
C	26	5H4744	SPACER	1
C	27	9S8343	BRACKET ASSEM.	1
	28	9F2978	NUT	2
	29	1S6889	SPRING	1
	30	8S5279	RATCHET	1
C	31	T883	WASHER	7
C	32	9S8333	BLOCK	1
C	33	L2070	BOLT	4
	34	5J4237	ANGLE ASSEM.	1
	35	1F748	NUT	2

138239

C INDICATES CHANGE

8S4480 RIPPER BULLDOZER LINKAGE AND CONSOLE GROUP—Type 2
AS VIEWED FROM RIGHT HAND SIDE OF TRACTOR

2P4110 RIPPER BULLDOZER LINKAGE GROUP

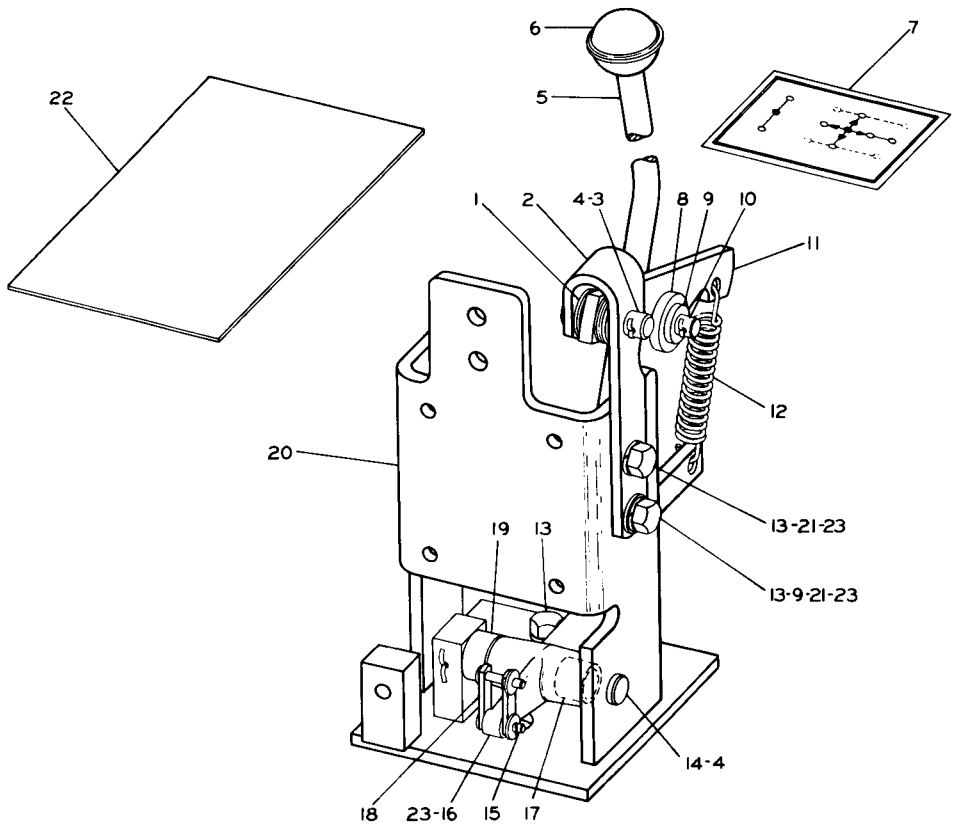

REF. NO.	PART NUMBER	DESCRIPTION	QTY
1	T883	WASHER-----(Use as Required)---	7
2	9S8259	BRACKET----------	1
3	8B1419	PIN----------	1
4	3B4617	COTTER PIN----------	2
5	8S5276	LEVER ASSEM. ----------	1
6	7F8092	KNOB----------	1
7	9S3223	FILM----------	1
8	9S8341	ROLLER----------	1
	4J1105	SHIM----------	1
9	4B4278	WASHER----------	2
10	9S1397	PIN----------	1
	3B4615	COTTER PIN----------	2
11	8S5279	RATCHET----------	1
12	1S6889	SPRING----------	1
13	1A2029	BOLT----------	6
14	5F2802	PIN----------	1
	V531	WASHER----------	1
15	8S5278	PIN----------	2
	4B4274	WASHER----------	2
	3B4604	COTTER PIN----------	2
16	8S5199	LEVER ASSEM. ----------	1
17	4H2610	BEARING----------	2
18	8S5259	LINK----------	2
19	5H4744	SPACER----------	1
20	9S8343	BRACKET ASSEM. ----------	1
21	9F2978	NUT----------	2
22	1H335	COVER--------(Use as Required)---	1
23	3B4506	LOCKWASHER----------	5

116024

ONLY "CATERPILLAR" PARTS GIVE "CATERPILLAR" PERFORMANCE

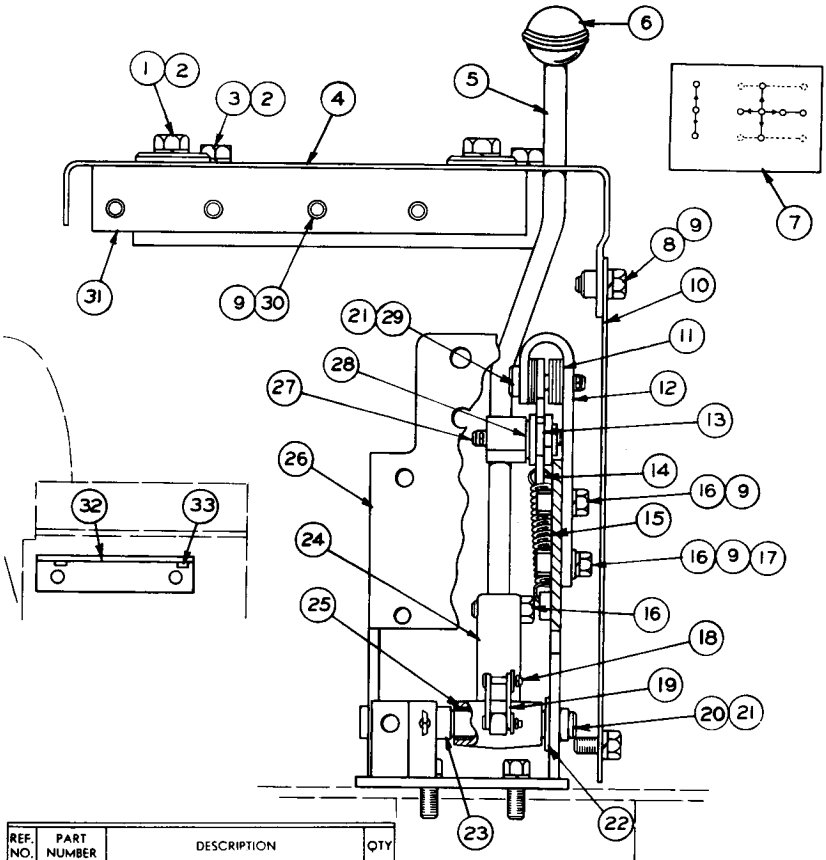

REF. NO.	PART NUMBER	DESCRIPTION	QTY
1	S1595	BOLT	2
	9S8337	WASHER	2
2	3B4508	LOCKWASHER	4
3	S1620	BOLT	2
4	8S7891	COVER ASSEM.	1
	9F2978	NUT	3
		(Part of 8S7891 Assem.)	
5	8S7316	LEVER ASSEM.	1
6	7F8092	KNOB	1
7	9S3223	FILM--------(Instruction)	1
8	S509	BOLT	5
9	3B4506	LOCKWASHER	14
10	8S7347	COVER	1
11	T883	WASHER	7
12	9S8259	BRACKET	1
13	9S8341	ROLLER	1
14	8S5279	RATCHET	1
15	1S6889	SPRING	1
16	1A2029	BOLT	6
17	4B4278	WASHER	2
18	8S5278	PIN	2
	4B4274	WASHER	2
	3B4605	COTTER PIN	2

REF. NO.	PART NUMBER	DESCRIPTION	QTY
19	8S5259	LINK	2
20	5F2802	PIN	1
21	3B4617	COTTER PIN	2
22	V531	WASHER	1
23	5H4744	SPACER	1
24	8S5199	LEVER ASSEM.	1
25	4H2610	BEARING	2
		(Part of 8S5199 Assem.)	
26	9S8343	BRACKET ASSEM.	1
	9F2978	NUT	2
		(Part of 9S8343 Assem.)	
27	9S1397	PIN	1
	3B4615	COTTER PIN	2
28	4J1105	SHIM	1
29	8B1419	PIN	1
30	L2070	BOLT	4
31	9S8333	BLOCK	1
32	5J4237	ANGLE ASSEM.	1
33	1F748	NUT	2
		(Part of 5J4237 Assem.)	

136232

8S5871 RIPPER BULLDOZER LINKAGE AND CONSOLE GROUP

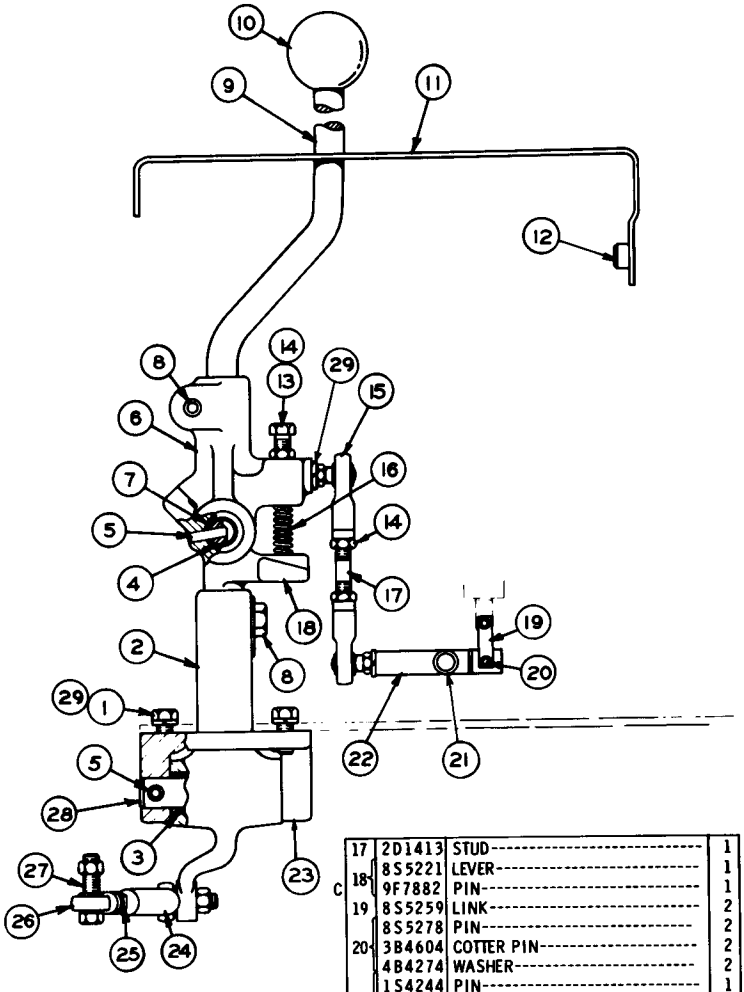

REF. NO.	PART NUMBER	DESCRIPTION	QTY
1	L1351	BOLT	3
2	7S4724	LEVER ASSEM.	1
3	8H8175	BEARING	2
4	8S7314	SHAFT	1
5	2L1699	PIN	2
6	8S7313	LEVER ASSEM.	1
7	8H8175	BEARING	2
8	7B3235	BOLT	2
9	9S4620	LEVER	1
10	2A1736	HANDLE	1
11	8S7306	COVER ASSEM.	1
12	9F2978	NUT	3
13	4B4532	BOLT	1
C 14	5B9079	NUT	3
15	5J5315	ROD END	2
16	6F6678	SPRING	1
17	2D1413	STUD	1
18	8S5221	LEVER	1
C	9F7882	PIN	1
19	8S5259	LINK	2
20	8S5278	PIN	2
	3B4604	COTTER PIN	2
	4B4274	WASHER	2
21	1S4244	PIN	1
	3B4615	COTTER PIN	1
	4B4278	WASHER	1
22	9S4621	LEVER	1
23	7S4777	BRACKET	1
24	7S4712	ROD ASSEM.	1
25	5B9079	NUT	2
26	4D4064	ROD END	2
27	S1591	BOLT	2
	1D4717	NUT	2
28	7S4733	SHAFT	1
C 29	3B4506	LOCKWASHER	5
▲	9S3224	FILM-------(Instruction)	1

▲ NOT SHOWN

C INDICATES CHANGE

138638

8S5793 RIPPER LINKAGE AND CONSOLE GROUP—Type 1

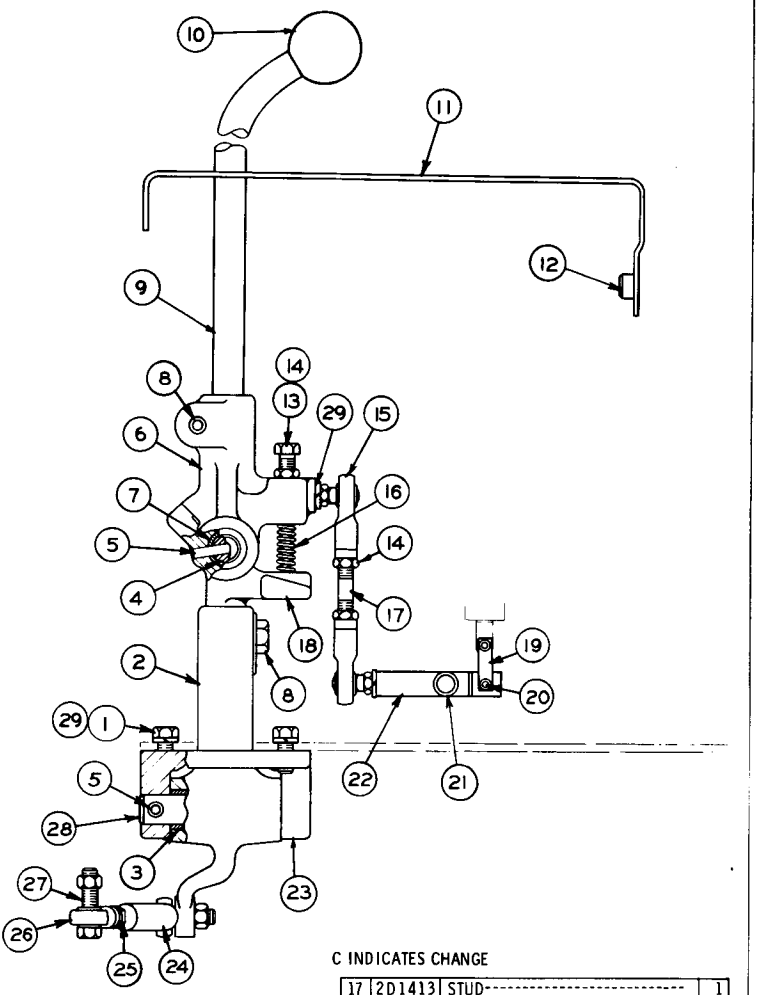

C INDICATES CHANGE

	REF. NO.	PART NUMBER	DESCRIPTION	QTY
	1	L1351	BOLT	3
	2	7S4724	LEVER ASSEM.	1
	3	8H8175	BEARING	2
	4	8S7314	SHAFT	1
	5	2L1699	PIN	2
	6	8S7313	LEVER ASSEM.	1
	7	8H8175	BEARING	2
	8	7B3235	BOLT	2
C	9	2P6390	LEVER	1
	10	2A1736	HANDLE	1
C	11	9S8373	COVER ASSEM.	1
	12	9F2978	NUT	3
	13	4B4532	BOLT	1
C	14	5B9079	NUT	3
	15	5J5315	ROD END	2
C	16	9S8237	SPRING	1
	17	2D1413	STUD	1
	18	8S5221	LEVER	1
	19	8S5259	LINK	2
	20	8S5278	PIN	2
		3B4604	COTTER PIN	2
		4B4274	WASHER	2
	21	1S4244	PIN	1
		3B4615	COTTER PIN	1
		4B4278	WASHER	1
	22	9S4621	LEVER	1
	23	7S4777	BRACKET	1
	24	7S4712	ROD ASSEM.	1
	25	5B9079	NUT	2
	26	4D4064	ROD END	2
	27	S1591	BOLT	2
		1D4717	NUT	2
	28	7S4733	SHAFT	1
	29	3B4506	LOCKWASHER	5
		9S3224	FILM-------(Instruction)	1

138493

8S5793 RIPPER LINKAGE AND CONSOLE GROUP—Type 2

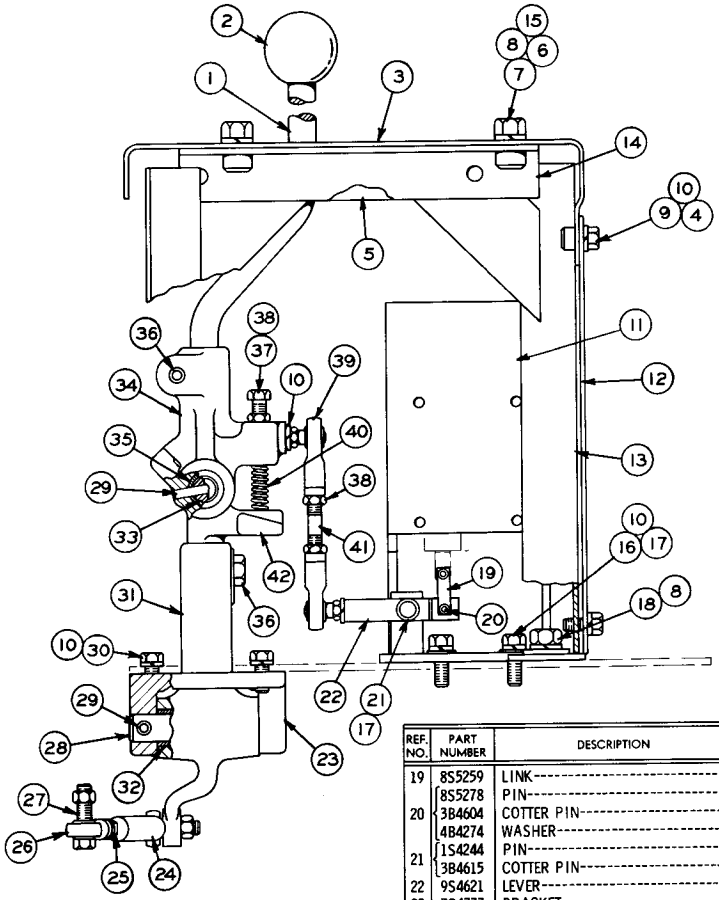

REF. NO.	PART NUMBER	DESCRIPTION	QTY
1	9S4620	LEVER	1
2	2A1736	HANDLE	1
3	8S7307	COVER ASSEM.	1
4	9F2978	NUT (Part of 8S7307 Cover Assem.)	3
5	5J4237	ANGLE ASSEM.	1
6	1F748	NUT (Part of 5J4237 Angle Assem.)	2
7	S1620	BOLT	4
8	3B4508	LOCKWASHER	5
9	S509	BOLT	5
10	3B4506	LOCKWASHER	13
11	8S5285	BRACKET ASSEM.	1
12	8S5282	COVER	1
13	8S5281	SUPPORT ASSEM.	1
14	5J4237	ANGLE ASSEM. (Part of 8S5281 Support Assem.)	1
15	1F748	NUT (Part of 5J4237 Angle Assem.)	2
16	1A2029	BOLT	3
17	4B4278	WASHER	4
18	1D4719	NUT	1
	7F502	WASHER	1

REF. NO.	PART NUMBER	DESCRIPTION	QTY
19	8S5259	LINK	2
20	8S5278	PIN	2
	3B4604	COTTER PIN	2
	4B4274	WASHER	2
21	1S4244	PIN	1
	3B4615	COTTER PIN	1
22	9S4621	LEVER	1
23	7S4777	BRACKET	1
24	7S4712	ROD ASSEM.	1
25	5B9079	NUT	2
26	4D4064	ROD END (Parts of 7S4712 Rod Assem.)	2
27	S1591	BOLT	2
	1D4717	NUT	2
28	7S4733	SHAFT	1
29	2L1699	PIN	2
30	L1351	BOLT	3
31	7S4724	LEVER ASSEM.	1
32	8H8175	BEARING (Part of 7S4724 Lever Assem.)	2
33	8S7314	SHAFT	1
34	8S7313	LEVER ASSEM.	1
35	8H8175	BEARING (Part of 8S7313 Lever Assem.)	2
36	7B3235	BOLT	2
37	4B4532	BOLT	1
38	5B9079	NUT	3
39	5J5315	ROD END	2
40	6F6678	SPRING	1
41	2D1413	STUD	1
42	8S5221	LEVER	1
	9S3224	FILM--------(Instruction)-------- (Not Shown)	1

106020

8S5792 RIPPER LINKAGE AND CONSOLE GROUP—Type 1

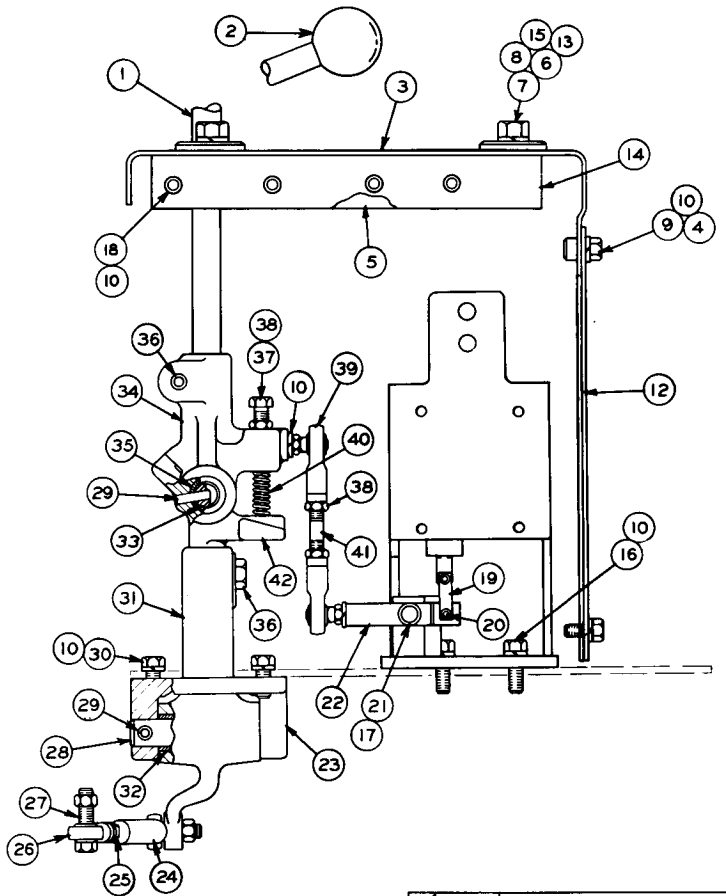

	REF. NO.	PART NUMBER	DESCRIPTION	QTY
C	1	2P6390	LEVER	1
	2	2A1736	HANDLE	1
C	3	9S8375	COVER ASSEM.	1
	4	9F2978	NUT	3
	5	5J4237	ANGLE ASSEM.	1
	6	1F748	NUT	2
C	7	S1620	BOLT	2
C	8	3B4508	LOCKWASHER	4
	9	S509	BOLT	5
C	10	3B4506	LOCKWASHER	17
C	11	9S8343	BRACKET ASSEM.	1
	12	8S5282	COVER	1
C	13	9S8337	WASHER	2
C	14	9S8333	BLOCK	1
C	15	S1595	BOLT	2
	16	1A2029	BOLT	3
C	17	4B4278	WASHER	1
C	18	L2070	BOLT	4
	19	8S5259	LINK	2
		8S5278	PIN	2
	20	3B4604	COTTER PIN	2
		4B4274	WASHER	2
	21	1S4244	PIN	1
		3B4615	COTTER PIN	1
	22	9S4621	LEVER	1
	23	7S4777	BRACKET	1
	24	7S4712	ROD ASSEM.	1
	25	5B9079	NUT	2
	26	4D4064	ROD END	2
	27	S1591	BOLT	2
		1D4717	NUT	2
	28	7S4733	SHAFT	1
	29	2L1699	PIN	2
	30	L1351	BOLT	3
	31	7S4724	LEVER ASSEM.	1
	32	8H8175	BEARING	2
	33	8S7314	SHAFT	1
	34	8S7313	LEVER ASSEM.	1
	35	8H8175	BEARING	2
	36	7B3235	BOLT	2
	37	4B4532	BOLT	1
	38	5B9079	NUT	3
	39	5J5315	ROD END	2
C	40	9S8237	SPRING	1
	41	2D1413	STUD	1
	42	8S5221	LEVER	1
▲		9S3224	FILM (Instruction)	1

▲ NOT SHOWN C INDICATES CHANGE

138494

8S5792 RIPPER LINKAGE AND CONSOLE GROUP—Type 2

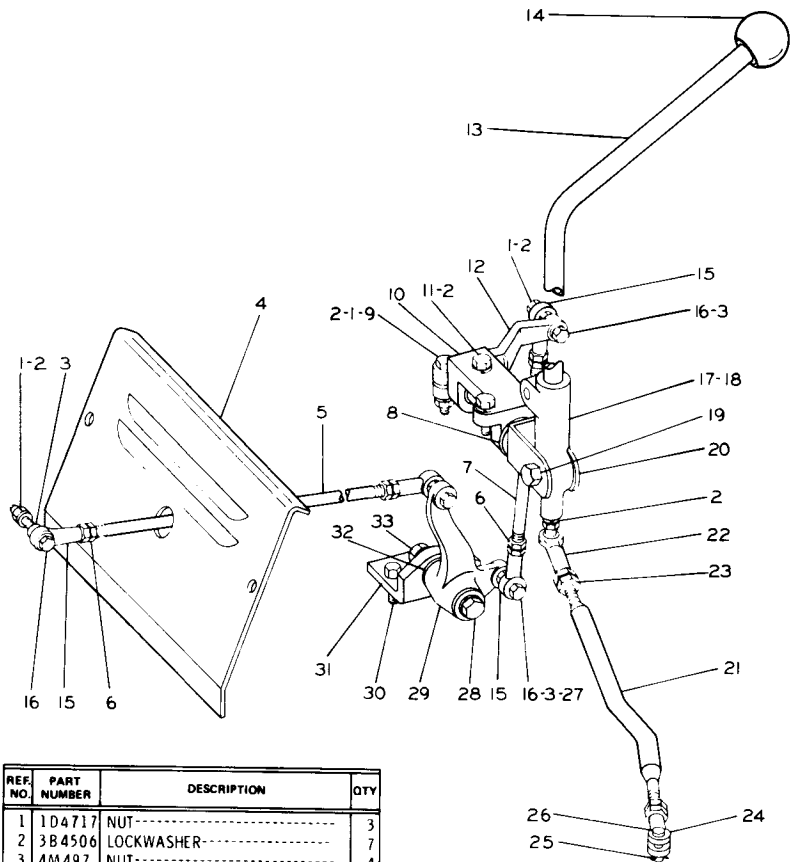

REF. NO.	PART NUMBER	DESCRIPTION	QTY
1	1D4717	NUT	3
2	3B4506	LOCKWASHER	7
3	4M497	NUT	4
4	2P3098	DOOR	1
5	1P4572	ROD	1
6	5B9079	NUT	4
7	1P4573	ROD	1
8	9S1385	SPACER	1
9	S1571	BOLT	1
10	1P4789	BRACKET ASSEM.	1
	8H8175	BEARING	2
11	L1351	BOLT	3
12	3S5008	LEVER	1
	1B8706	KEY	1
13	1P4870	LEVER	1
14	2A1736	HANDLE	1
15	4D4064	ROD END	4
16	4M496	BOLT	4
17	1P4867	LEVER ASSEM.	1
	5H3895	BEARING	1
18	7B3235	BOLT	1
19	1A1460	BOLT	1
	1D4719	NUT	1
	3B4508	LOCKWASHER	1
	2M7167	SPACER	1
20	1P4571	SHAFT ASSEM.	1

	21	1P4869	ROD ASSEM.	1
	22	5J5315	ROD END	1
	23	5B9079	NUT	2
	24	1M1341	ROD END	1
	25	3B4615	COTTER PIN	1
	26	1B676	PIN	1
	27	1B2578	NUT (Jam)	2
	28	S1621	BOLT	1
		3J4818	LOCKWASHER	1
		1J8965	WASHER	1
	29	7S4723	BELLCRANK ASSEM.	1
		8H8175	BEARING	2
C	30	S1571	BOLT	2
	31	1P4806	BRACKET	1
	32	5S9704	SHAFT	1
	33	1D4720	NUT	1
		3B4510	LOCKWASHER	1
	▲	9S3224	FILM (instruction)	1

C INDICATES CHANGE ▲ NOT SHOWN 203778

1P4877 RIPPER LINKAGE GROUP

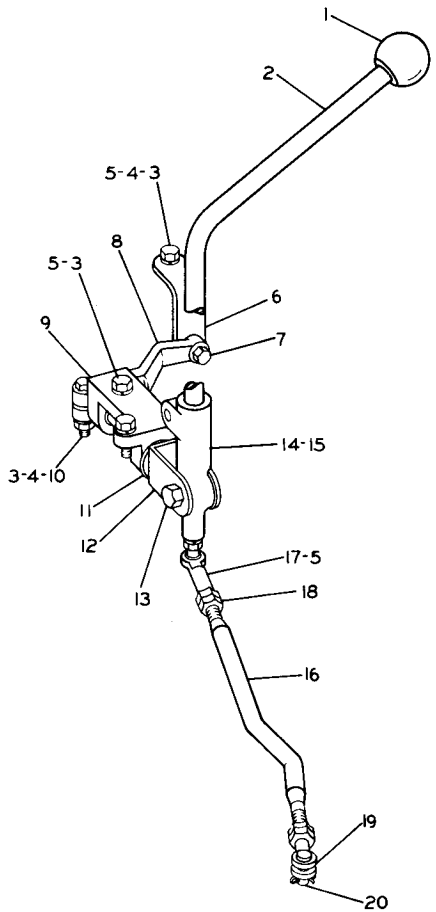

REF. NO.	PART NUMBER	DESCRIPTION	QTY
1	2A1736	HANDLE	1
2	1P4870	LEVER	1
3	L1351	BOLT	4
4	1D4717	NUT	2
5	3B4506	LOCKWASHER	6
6	9M766	BRACKET	1
7	2B2695	BOLT	1
	1D4716	NUT	1
8	3S5008	LEVER	1
9	1P4789	BRACKET ASSEM.	1
10	S1571	BOLT	1
11	9S1385	SPACER	1
12	1P4571	SHAFT ASSEM.	1
	1B8706	KEY	1
13	1A1460	BOLT	1
	1D4719	NUT	1
	3B4508	LOCKWASHER	1
	2M7167	SPACER	1
14	1P4867	LEVER ASSEM.	1
	5H3895	BEARING	1
15	7B3235	BOLT	1
16	1P4869	ROD ASSEM.	1
17	5J5315	ROD END	1
18	5B9079	NUT	2
19	1M1341	ROD END	1
20	1B676	PIN	1
	3B4615	COTTER PIN	1

142247

3P434 IMPLEMENT LINKAGE GROUP

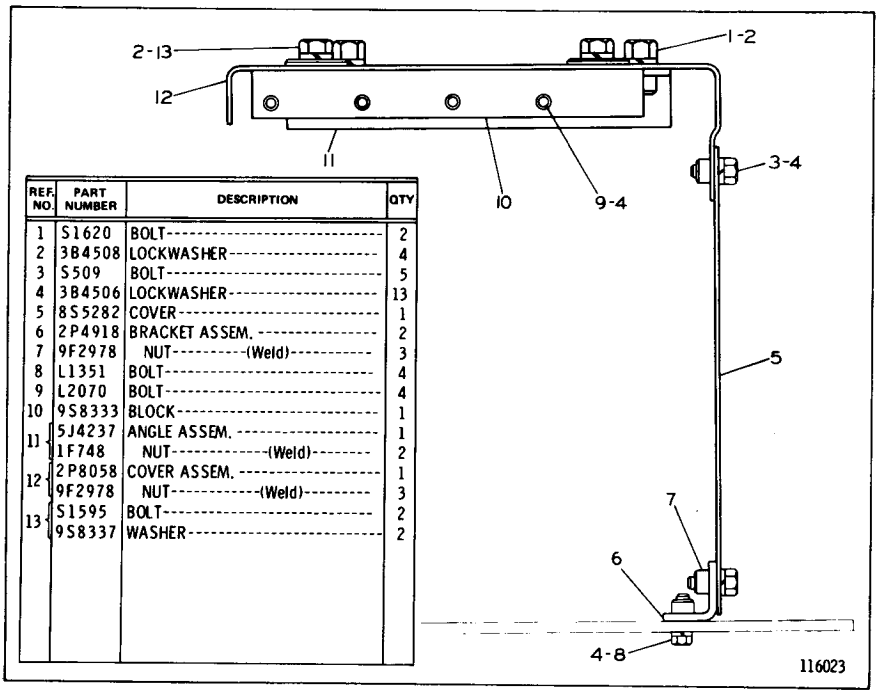

REF. NO.	PART NUMBER	DESCRIPTION	QTY
1	S1620	BOLT	2
2	3B4508	LOCKWASHER	4
3	S509	BOLT	5
4	3B4506	LOCKWASHER	13
5	8S5282	COVER	1
6	2P4918	BRACKET ASSEM.	2
7	9F2978	NUT-(Weld)	3
8	L1351	BOLT	4
9	L2070	BOLT	4
10	9S8333	BLOCK	1
11	5J4237	ANGLE ASSEM.	1
	1F748	NUT-(Weld)	2
12	2P8058	COVER ASSEM.	1
	9F2978	NUT-(Weld)	3
13	S1595	BOLT	2
	9S8337	WASHER	2

2P4108 CONSOLE GROUP

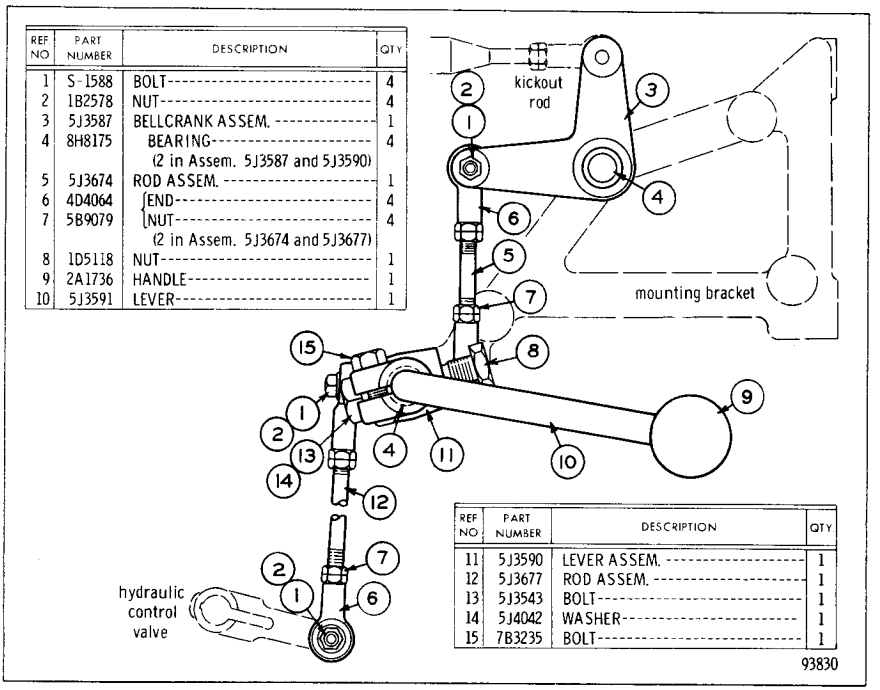

REF NO	PART NUMBER	DESCRIPTION	QTY
1	S-1588	BOLT	4
2	1B2578	NUT	4
3	5J3587	BELLCRANK ASSEM.	1
4	8H8175	BEARING (2 in Assem. 5J3587 and 5J3590)	4
5	5J3674	ROD ASSEM.	1
6	4D4064	END	4
7	5B9079	NUT (2 in Assem. 5J3674 and 5J3677)	4
8	1D5118	NUT	1
9	2A1736	HANDLE	1
10	5J3591	LEVER	1

REF NO	PART NUMBER	DESCRIPTION	QTY
11	5J3590	LEVER ASSEM.	1
12	5J3677	ROD ASSEM.	1
13	5J3543	BOLT	1
14	5J4042	WASHER	1
15	7B3235	BOLT	1

5J3997 RIPPER CONTROL LINKAGE GROUP—Top View—Type 1

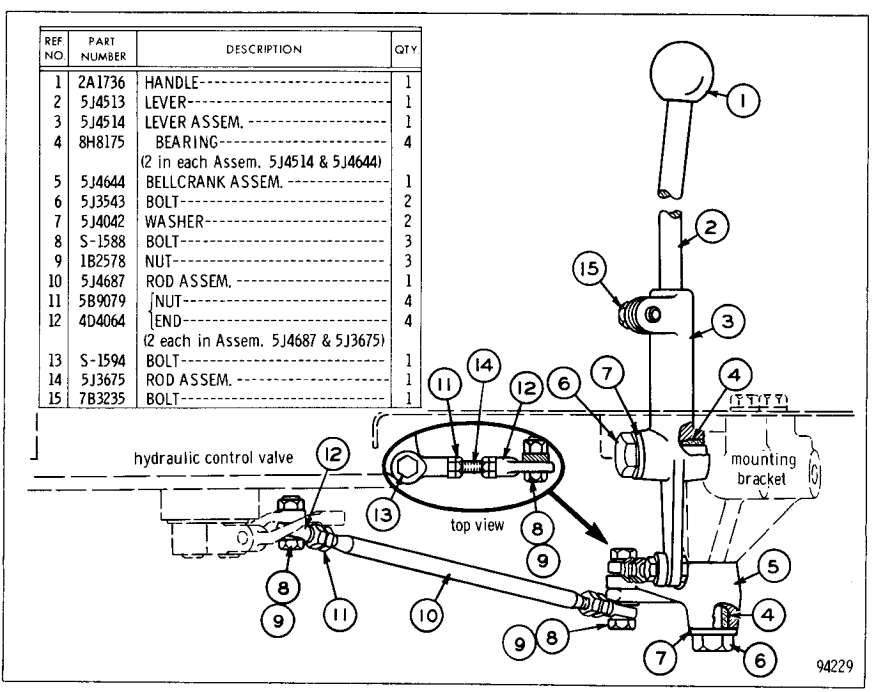

REF NO	PART NUMBER	DESCRIPTION	QTY
1	2A1736	HANDLE	1
2	5J4513	LEVER	1
3	5J4514	LEVER ASSEM.	1
4	8H8175	BEARING (2 in each Assem. 5J4514 & 5J4644)	4
5	5J4644	BELLCRANK ASSEM.	1
6	5J3543	BOLT	2
7	5J4042	WASHER	2
8	S-1588	BOLT	3
9	1B2578	NUT	3
10	5J4687	ROD ASSEM.	1
11	5B9079	NUT	4
12	4D4064	END (2 each in Assem. 5J4687 & 5J3675)	4
13	S-1594	BOLT	1
14	5J3675	ROD ASSEM.	1
15	7B3235	BOLT	1

5J4395 RIPPER CONTROL LINKAGE GROUP—Side View—Type 1

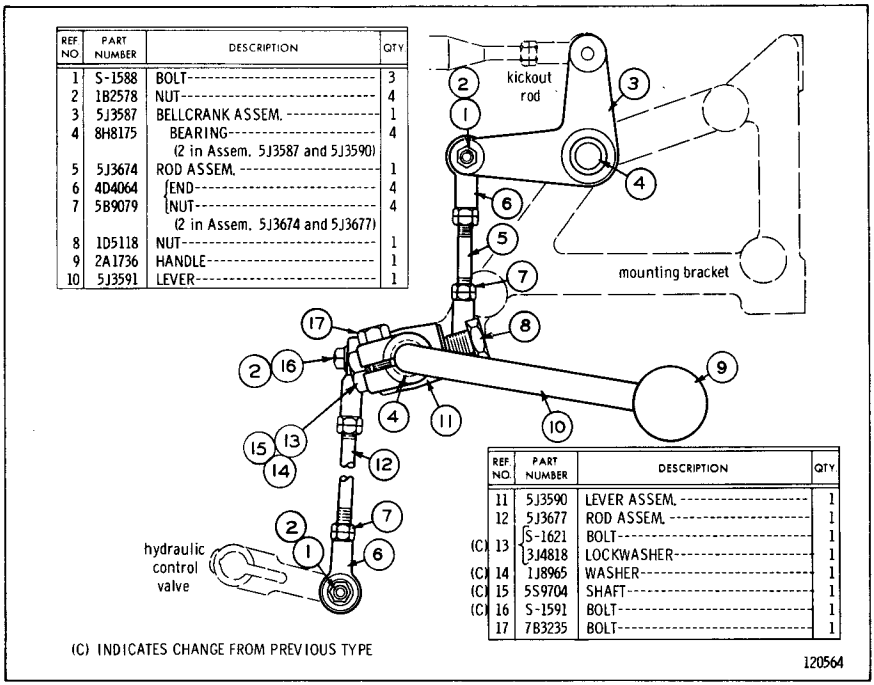

REF NO	PART NUMBER	DESCRIPTION	QTY
1	S-1588	BOLT	3
2	1B2578	NUT	4
3	5J3587	BELLCRANK ASSEM.	1
4	8H8175	BEARING (2 in Assem. 5J3587 and 5J3590)	4
5	5J3674	ROD ASSEM.	1
6	4D4064	END	4
7	5B9079	NUT (2 in Assem. 5J3674 and 5J3677)	4
8	1D5118	NUT	1
9	2A1736	HANDLE	1
10	5J3591	LEVER	1

REF NO	PART NUMBER	DESCRIPTION	QTY
11	5J3590	LEVER ASSEM.	1
12	5J3677	ROD ASSEM.	1
(C) 13	S-1621 / 3J4818	BOLT / LOCKWASHER	1 / 1
(C) 14	1J8965	WASHER	1
(C) 15	5S9704	SHAFT	1
(C) 16	S-1591	BOLT	1
17	7B3235	BOLT	1

(C) INDICATES CHANGE FROM PREVIOUS TYPE

120564

5J3997 RIPPER CONTROL LINKAGE GROUP–Top View–Type 2

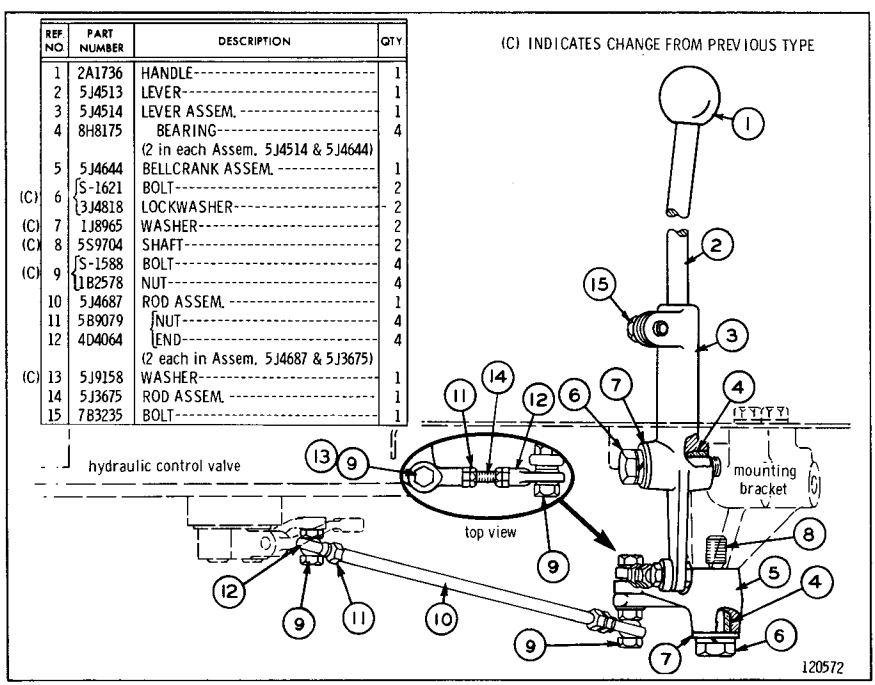

REF NO	PART NUMBER	DESCRIPTION	QTY
1	2A1736	HANDLE	1
2	5J4513	LEVER	1
3	5J4514	LEVER ASSEM.	1
4	8H8175	BEARING (2 in each Assem. 5J4514 & 5J4644)	4
5	5J4644	BELLCRANK ASSEM.	1
(C) 6	S-1621 / 3J4818	BOLT / LOCKWASHER	2 / 2
(C) 7	1J8965	WASHER	2
(C) 8	5S9704	SHAFT	2
(C) 9	S-1588 / 1B2578	BOLT / NUT	4 / 4
10	5J4687	ROD ASSEM.	1
11	5B9079	NUT	4
12	4D4064	END (2 each in Assem. 5J4687 & 5J3675)	4
(C) 13	5J9158	WASHER	1
14	5J3675	ROD ASSEM.	1
15	7B3235	BOLT	1

120572

5J4395 RIPPER CONTROL LINKAGE GROUP–Side View–Type 2

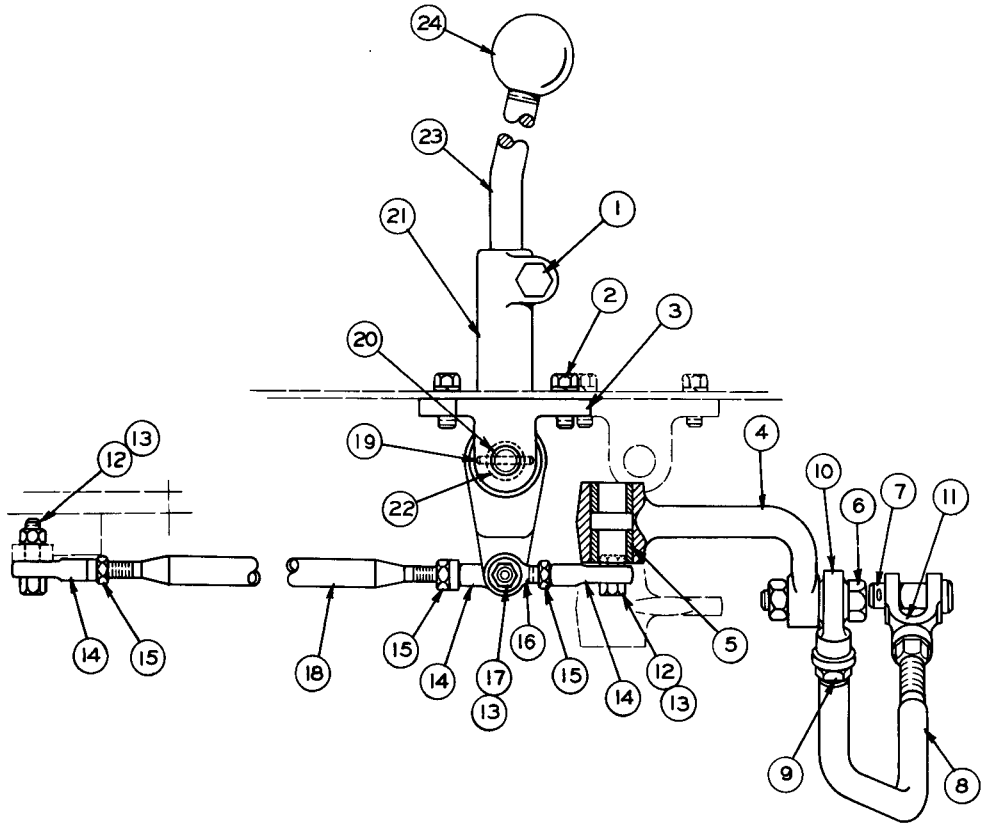

REF. NO.	PART NUMBER	DESCRIPTION	QTY
1	7B3235	BOLT	1
2	L1351	BOLT	3
	3B4506	LOCKWASHER	3
3	7S4777	BRACKET	1
4	8S7309	BELLCRANK ASSEM.	1
5	8H8175	BEARING (Part of 8S7309 Bellcrank Assem.)	2
6	1A1135	BOLT	1
	1D5118	NUT	1
7	907A	PIN	1
	3B4617	COTTER PIN	1
8	8S7423	ROD	1
9	9S1354	NUT	2
10	2K5804	ROD END	1
11	4M7930	ROD END	1
12	S1591	BOLT	2
13	1D4717	NUT	3
14	4D4064	ROD END	3
15	5B9079	NUT	3
16	4K4726	ROD END	1
17	7F192	BOLT	1
18	7S4713	ROD	1
19	2L1699	PIN	1
20	7S4733	SHAFT	1
21	7S4724	LEVER ASSEM.	1
22	8H8175	BEARING (Part of 7S4724 Lever Assem.)	2
23	7S4867	LEVER	1
24	2A1736	HANDLE	1

7S4762 RIPPER LINKAGE GROUP—As Viewed from Front of Tractor

REF. NO.	PART NUMBER	DESCRIPTION	QTY
1	3B1915	BOLT	3
2	1D4717	NUT	4
3	4D4064	ROD END	4
4	5B9079	NUT	4
5	7S4725	ROD	1
6	4K4726	ROD END	1
7	7S4724	LEVER ASSEM.	1
8	8H8175	BEARING (Part of 7S4724 Lever Assem.)	2
9	7S4733	SHAFT	1
10	2L1699	PIN	1
11	7S4777	BRACKET	1
12	L1351	BOLT	3
	3B4506	LOCKWASHER	3
13	7B3235	BOLT	1
14	2A1736	HANDLE	1
15	9S9464	LEVER	1
16	7S4721	BELLCRANK ASSEM.	1
17	8H8175	BEARING (Part of 7S4721 Bellcrank Assem.)	2
18	7F192	BOLT	1
19	7S4859	ROD	1

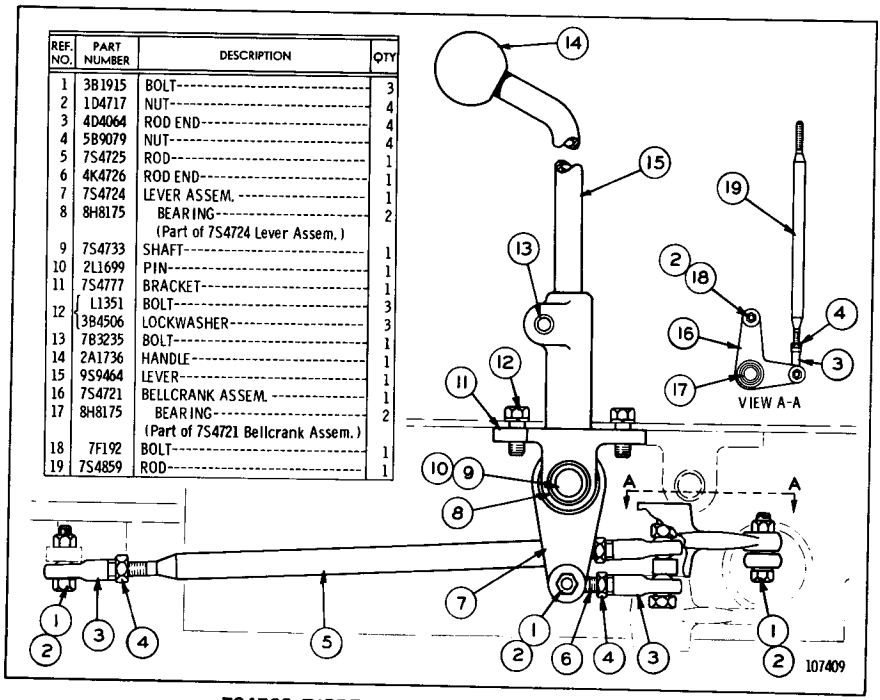

7S4763 RIPPER LINKAGE GROUP—Type 1
AS VIEWED FROM FRONT OF TRACTOR

REF. NO.	PART NUMBER	DESCRIPTION	QTY
1	2A1736	HANDLE	1
2	9S2054	LEVER	1
3	7B3235	BOLT	1
4	7S4724	LEVER ASSEM.	1
	8H8175	BEARING	2
5	L1351	BOLT	3
	3B4506	LOCKWASHER	3
6	7S4777	BRACKET	1
7	2L1699	PIN	1
8	7S4733	SHAFT	1
9	S1588	BOLT	1
10	1D4717	NUT	2
11	7S4712	ROD ASSEM.	1
12	4D4064	ROD END	2
13	5B9079	NUT	2
14	3B1915	BOLT	1

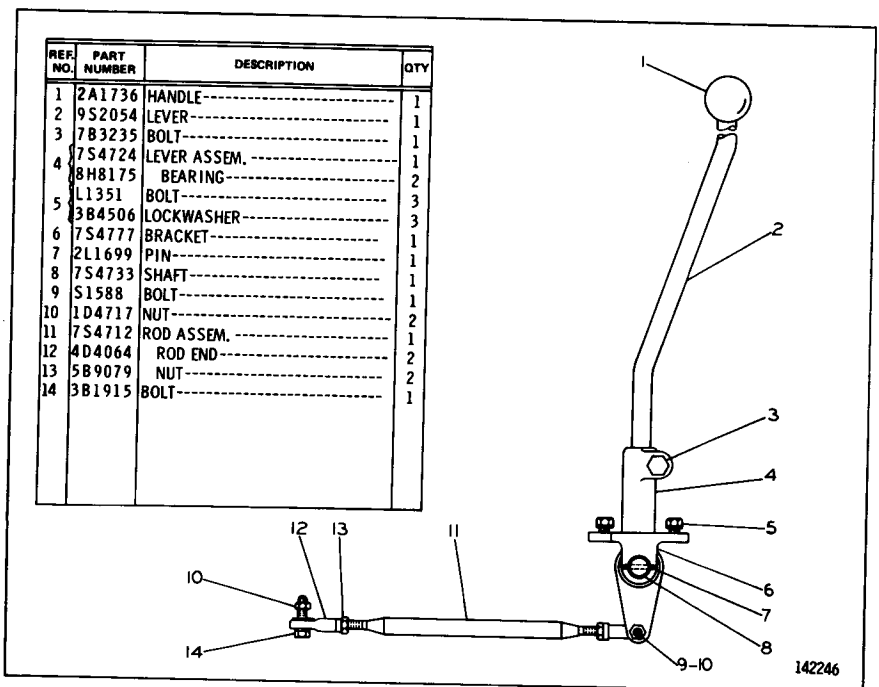

2P9882 RIPPER LINKAGE GROUP—As Viewed from Front of Tractor

	REF. NO.	PART NUMBER	DESCRIPTION	QTY
	1	2A1736	HANDLE	1
	2	9S9464	LEVER	1
	3	7S4724	LEVER ASSEM.	1
	4	8H8175	BEARING	1
			(Part of 7S4724 Assem.)	
	5	2L1699	PIN	1
C	6	3B1915	BOLT	2
C		1D4717	NUT	2
	7	7B3235	BOLT	1
	8	L1351	BOLT	3
		3B4506	LOCKWASHER	3
	9	7S4777	BRACKET	1
	10	7S4733	SHAFT	1
C	11	7S4712	ROD ASSEM.	1
	12	5B9079	NUT	2
	13	4D4064	ROD END	2
			(Parts of 7S4712 Assem.)	

C INDICATES CHANGE FROM PREVIOUS TYPE

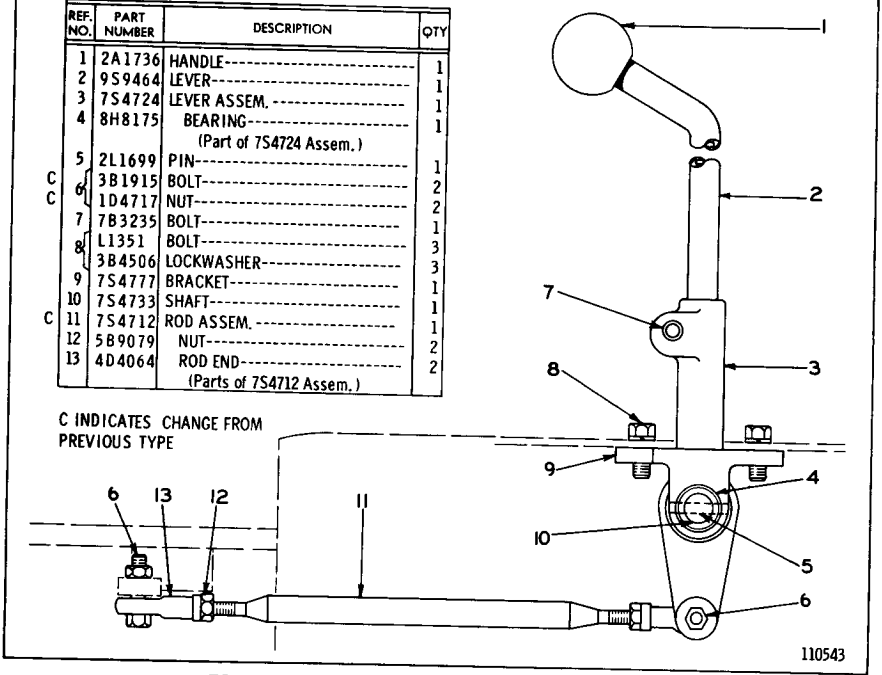

7S4763 RIPPER LINKAGE GROUP—Type 2
AS VIEWED FROM FRONT OF TRACTOR

QUANTITY USED	PART NUMBER	DESCRIPTION
1	2M6831	Plate--Serial Number Centered on top Tank Assembly
2	4B4158	Drive Screw
1	1S6693	Transfer--Hydraulic Instructions Top of Hydraulic Tank adjacent to Serial Number Plate

NAME PLATES AND TRANSFERS

SPECIFICATIONS

(SUBJECT TO CHANGE WITHOUT NOTICE)

	183	193
Weight, Shipping (Approximate) in pounds:		
Double Valve	1585	1295
Triple Valve	1810	1380

MACHINE SERIAL NUMBER PLATE LOCATION

Hydraulic Control serial Number plate is located on the top center of the Hydraulic Control tank assembly.

PRINTED IN U.S.A. FORM UE036068