Do Co LBn Co

PARTS 672-3369

580 CK
Series B
Loader Backhoe
Operators Manual 9-3007

J I Case
A Tenneco Company

TENNECO

This Safety Alert Symbol Indicates Important Safety Messages In This Manual. When You See This Symbol, Carefully Read The Message That Follows and Be Alert To The Possibility Of Personal Injury Or Death. 1-1

Price of this manual $1.50

Printed June 1975

TABLE OF CONTENTS

SAFETY RULES 2
INTRODUCTION 5
Serial Number Location 7
SPECIFICATIONS 8
Loader With Standard Bucket 8
Loader With 4-In-1 Bucket 9
Standard Backhoe 10
4 Ft. Extendahoe 10
Hydraulic System 12
Shipping Weights 13
Buckets 13
OPERATING INSTRUCTIONS 14
Operator's Seat 14
Loader Controls 15
4-In-1 Bucket 18
Three-Point Hitch Controls 20
Backhoe Controls 21
Positioning the Stabilizers 25
Hydra-Guide 26
Four Foot Extendahoe 29
Boom Lockout 31
ROPS 32
Transporting the Backhoe 34
Backhoe Removal 36
Backhoe Installation 38
Three-Point Hitch Removal 39
Three-Point Hitch Installation 41
Counterweight 42
OPERATING TIPS 43
Loader Operation 43
Backhoe Operation 48
MAINTENANCE/LUBRICATION 55
Lubrication 55
Hydraulic System 60
Return-To-Dig Adjustment 66
Anti-Rollback Adjustment 67
Bucket Teeth 68
EXTRA EQUIPMENT 69
INDEX 70

SAFETY RULES

Safety is everybody's business. DON'T TAKE CHANCES. Use this manual to thoroughly familiarize yourself with the machine. The safety rules which follow are for your protection--obey them. Be safety conscious at all times--safety is everybody's business.

It is recommended that these safety rules be copied and posted at the work site.

A properly maintained machine is the safest machine.

Pre-Starting

Wear the proper safety equipment--avoid loose clothing. Request additional safety equipment when you feel your safety is at stake.

Visually check out the machine for leaks and broken, missing or malfunctioning parts.

Be sure the operator's area is free of oil, loose objects or ice. During operation take time to clean the operator's area as required.

Be thoroughly familiar with the location of underground gas lines, water mains, cables, etc.

Check clearance of overhead power and telephone lines. Never touch wires with any part of the machine.

Clear the area of all unauthorized people.

Carry a fire extinguisher* and first aid kit at all times. Failure to treat seemingly minor cuts and scratches can result in lost time injuries.

Operating

This is a one man machine--no riders allowed.

Operate all controls from the operator's seat only with the seat properly positioned.

Adjust travel speed to work site or highway conditions. Steer with both hands.

Lock brake pedals together before traveling over 5 mph or applying parking brake.

Do not drive near the edge of a trench, bank or excavation.

When driving up a steep incline, engage the clutch slowly and be ready to depress the clutch pedal immediately should the front wheels rise off the ground (shuttle tractors only). This procedure also applies should the rear wheels become mired in soft ground or a rear wheel drops into a hole.

Keep the transmission in low gear when going down steep hills or inclines (shuttle tractors only). Never coast with the transmission in neutral or the clutch pedal depressed.

Be extra careful when working on hillside or inclines.

Carry the loader bucket as low as possible. Never carry the bucket at full height.

When operating the backhoe on an incline, dump the bucket on the uphill side whenever possible.

Never dig under the backhoe stabilizers; a cave-in may result.

Be sure the stabilizers are properly positioned before operating the backhoe, see pages 25 and 48.

Make sure the area is clear before lowering the stabilizers or swinging the boom above or below ground level.

Lock the backhoe in the transport position when the backhoe is not in use.

Never use the transport latch mechanism to hold the boom when using the backhoe as a crane.

If the machine is equipped with a ROPS*, fasten the seat belt.

Before dismounting, lock brake pedals together and apply the parking brake, put the transmission in low gear (dry clutch models), lower the loader and backhoe (unless in transport position) buckets to the ground and shut off the engine. Never leave the machine unattended with the engine running.

When transporting the machine, make sure the backhoe transport latch is engaged, the swing pin installed and the stabilizers fully raised. On side shift backhoes, move the backhoe completely to the right or left and swing the boom against the mounting frame.

When transporting the machine, make use of the safety equipment available, such as the SMV emblem*, flashing lights*, and rotating beacon*. Use these safety devices at the work site as well.

Maintenance

Always lower the loader bucket, backhoe bucket or rear mounted attachment to the ground before performing any service operation. If the service being performed requires the bucket or rear mounted attachment be raised, block that attachment in place first. See Figure 1.

Never grease, oil or perform any maintenance with the engine running unless so instructed in the operator's or service manual. If a bucket must be raised in order to perform the operation, block the bucket in place first.

Never operate the controls unless properly seated in the operator's seat.

Check the parking brake frequently to make sure it is operating properly.

Remember this--the man in the operator's seat is responsible for the safe operation of this machine.

Clean or replace all decals* if they can't be read.

NOTE 1: Items followed by an asterisk (*) can be purchased from your Authorized Case Dealer.

NOTE 2: A set of lift cylinders stops can be fabricated from channel iron. Use the dimensions shown in Figure 1.

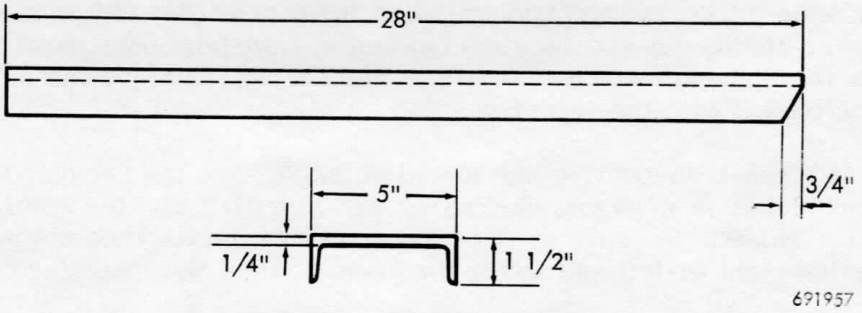

Figure 1 - Cylinder Stops

Figure 2

Figure 3

TO THE OWNER AND OPERATOR

The care you give your machine will determine the satisfaction and service life you will obtain from it. Use this manual as your guide. By following the instructions and suggestions in this manual, your machine will serve you profitably for many years.

As an Authorized Case Dealer, we stock genuine Case parts, which are manufactured with the same precision and skill as the original equipment. Our factory trained staff is kept well informed of the best methods of servicing Case equipment and is ready and able to help you.

A service manual for this machine is available through your Authorized Case Dealer at nominal cost. This manual is recommended if you perform your own service and maintenance.

Your Authorized Case Dealer

The J I Case Company reserves the right to make improvements in design or changes in specifications at any time, without incurring any obligation relating to such changes.

To insure efficient and prompt service, please furnish the model and serial numbers of your loader, backhoe, three point hitch and other equipment in all correspondence and contacts.

Definition Of Right Hand And Left Hand

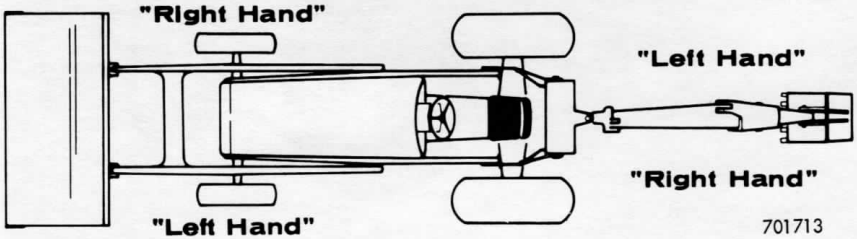

Figure 4

SERIAL NUMBER LOCATION

When ordering parts or requesting information from your Authorized Case Dealer, by personal contact or correspondence, always specify the model and serial number of the machine and the equipment or component in question. The serial numbers are located as follows:

Backhoe: located on the right side of the backhoe main frame.

Loader: located on the left side of the loader subframe.

Three point hitch models without loader: located on the left subframe.

Three point hitch: located on the lower crossmember in the center.

Loader bucket: part number located on the bucket back.

Backhoe bucket: part number located between the bucket mounting ears.

ROPS: located on the upper front crossmember in the structure.

Use the space below to record the model, serial or part numbers.

	Model or Part Number	Serial Number
Backhoe	_____	_____
Loader	_____	_____
Three point hitch subframe	_____	_____
Three point hitch	_____	_____
Loader bucket	_____	_____
Backhoe bucket	_____	_____

SPECIFICATIONS

All specifications taken in accordance with IEMC or SAE where applicable.

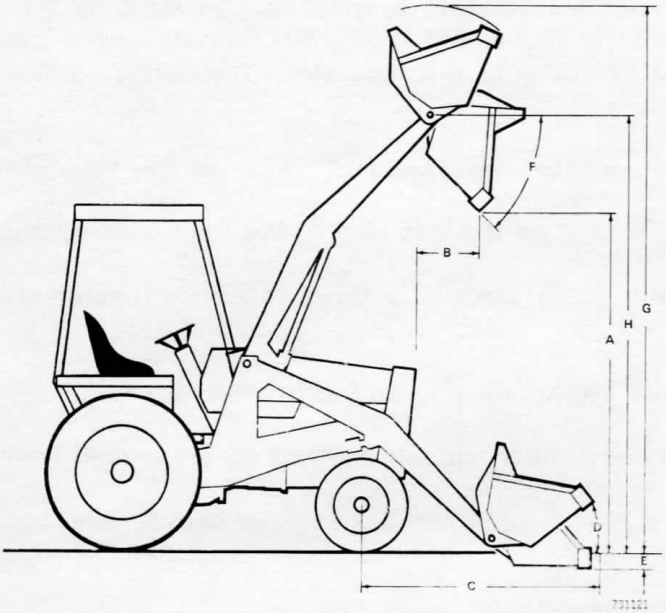

Figure 8

LOADER WITH STANDARD BUCKET

Dimensions

		Short Lip	Long Lip
A.	Dump clearance at full height 45° dump	103" (2616 mm)	99" (2515 mm)
B.	Dump reach at full height 45° dump (188 engine)	24-1/2" (622 mm)	28-1/2" (724 mm)
	(159 engine)	25-1/2" (648 mm)	29-1/2 (749 mm)
C.	Reach - bucket on ground (188 engine)	70-1/2" (1791 mm)	76" (1930 mm)
	(159 engine)	69-1/4" (1759 mm)	74-3/4" (1899 mm)
D.	Bucket rollback at ground line	40°	40°
E.	Digging depth below ground - bucket flat	4-3/4" (121 mm)	4-3/4" (121 mm)
F.	Dump angle at full height	45°	45°
	Grading angle	110°	110°
G.	Overall operating height	157" (3988 mm)	157" (3988 mm)
H.	Height to bucket hinge pin	128" (3251 mm)	128" (3251 mm)
	Overall length - with C/W	178-3/4" (4540 mm)	184-1/4" (4680 mm)
	- with 3 point hitch	184-1/2" (4686 mm)	190" (4826 mm)
	- with standard backhoe in transport	256-1/2" (6515 mm)	262" (6655 mm)
	- with 4' (1219 mm) Extendahoe in transport	262-1/2" (6668 mm)	268" (6807 mm)
	Overall height to top of loader upright	63-1/4" (1607 mm)	63-1/4" (1607 mm)
	to top of exhaust stack	92" (2337 mm)	92" (2337 mm)
	Overall width - with backhoe	80" (2032 mm)	80" (2032 mm)
	- with C/W or 3 point hitch	79-1/4" (2013 mm)	79-1/4" (2013 mm)

	Short Lip	Long Lip
Turning clearance circle - bucket rolled back - hinge pin at 3' (914 mm)		
- brake turn	362-1/4" (9201 mm)	367" (9322 mm)
- without brakes	373-1/4" (9481 mm)	378" (9601 mm)
Ground clearance	13-1/2" (343 mm)	13-1/2" (343 mm)

Operating Data

Lift capacity to full height	4000 lbs. (1814 kg)	4000 lbs. (1814 kg)
Breakout force, tilt cylinders pivot at bucket hinge pin	5880 lbs. (2667 kg)	4856 lbs. (2203 kg)
Raising time to full height	4.2 sec.	4.2 sec.
Bucket dumping time - bucket empty	1.0 sec.	1.0 sec.
Lowering time, power down	3.0 sec.	3.0 sec.
Return-to-dig	4.2 sec.	4.2 sec.

LOADER WITH 4-IN-1 BUCKET

Dimensions

A.	Dump clearance at full height - 44° dump	
	- clam dump	127" (3226 mm)
	- bucket dump	100" (2540 mm)
B.	Dump reach at full height - 44° dump	
	(188 engine)	28-1/2" (724 mm)
	(159 engine)	27-1/4" (692 mm)
C.	Reach - bucket on ground	
	(188 engine)	74" (1880 mm)
	(159 engine)	73-3/4" (1873 mm)
D.	Bucket rollback at ground line	40°
E.	Digging depth below ground - bucket flat	4" (102 mm)
	Digging depth - using clam	37-1/2" (953 mm)
	Dozing depth - clam open	4" (102 mm)
F.	Dump angle at full height	44°
	Grading angle - clam closed	107°
G.	Overall operating height	160" (4064 mm)
H.	Height to bucket hinge pin	127" (3226 mm)
	Overall length - with counterweight	182-1/2" (4636 mm)
	- with 3 point hitch	188-1/4" (4782 mm)
	- with standard backhoe in transport	260-1/2" (6617 mm)
	- with 4' (1219 mm) Extendahoe in transport	266-1/2" (6769 mm)
	Overall width - with backhoe	80" (2032 mm)
	- with counterweight or 3 point hitch	79-1/4" (2013 mm)
	Overall height - to top of loader upright	63-1/4" (1607 mm)
	to top of exhaust stack	92" (2337 mm)
	Turning clearance circle - brake turn	361" (9169 mm)
	- without brakes	372" (9449 mm)
	Ground clearance	13-1/2" (343 mm)
	Width of dozer cutting edge	73-1/4" (1861 mm)
	Maximum clam opening	37-1/2" (953 mm)
	Moldboard height	36" (914 mm)
	Bucket cutting edge	74" (1880 mm)

Operating Data

Same as Loader With Standard Bucket above, except breakout force of 5450 lbs. (2772 kg)

NOTE: Specifications taken with 7.50 x 16 - 10 PR (I1) rib front tires, 14.9 x 24 - 6 PR (R4) rear tires, buckets as indicated and standard equipment unless otherwise specified.

STANDARD BACKHOE

Operating Dimensions

A.	Overall reach from rear axle centerline	21'1" (6426 mm)
B.	Digging radius from swing pivot	17' 6-1/2" (5347 mm)
C.	Digging depth	14' (4267 mm)
D.	Loading height - boom at 67°	10' 10-1/4" (3308 mm)
E.	Loading reach - boom at 67°	7' 7-1/2" (2324 mm)
F.	Overall height, maximum	18' 3" (5563 mm)
	Swing arc	180°
	Stabilizer spread in operating position	
	- angled	109" (2769 mm)
	- straight	113" (2870 mm)
	Stabilizer angle from straight position	20°
	Ground clearance at backhoe	11-1/4" (286 mm)

Transport Dimensions

Transport height	11' 2-1/2" (3416 mm)
Overall width - travel position	
- stabilizers angled	80" (2032 mm)
- stabilizers straight	89-3/4" (2280 mm)
Overall length, loader bucket on ground and backhoe in transport	
- short lip bucket	21' 4-1/2" (6515 mm)
- long lip bucket	21' 10" (6655 mm)
- 4-in-1 bucket	21' 8" (6604 mm)

Operating Data

Digging force, bucket cylinder	9400 lbs. (4264 kg)
Digging force, dipper cylinder	6058 lbs. (2748 kg)
Leveling angle (maximum grade on which the backhoe will make a vertical cut)	
- stabilizers angled	11°
- stabilizers straight	15°

NOTE: Specifications taken with 24" (610 mm) trenching bucket, 74" (1880 mm) short lip loader bucket, 7.50 x 16 - 10 PR (I1) rib front tires, 14.9 x 24 - 6 PR (R4) rear tires and standard equipment unless otherwise specified.

4 FT. EXTENDAHOE

Operating Dimensions

		Retracted	Extended
A.	Overall reach from rear axle centerline	21' 3" (6477 mm)	25' 1-1/2" (7658 mm)
B.	Digging radius from swing pivot	17' 9-1/2" (5423 mm)	21' 8" (6604 mm)
C.	Digging depth	14' (4267 mm)	18' (5486 mm)
D.	Loading height - boom at 75°	12' 9" (3886 mm)	14' 9-1/2" (4509 mm)
E.	Loading reach - boom at 75°	7' 1" (2159 mm)	9' 4" (2845 mm)
F.	Overall height maximum	N/A	20' 6-1/2" (6261 mm)
	Swing arc	180°	180°

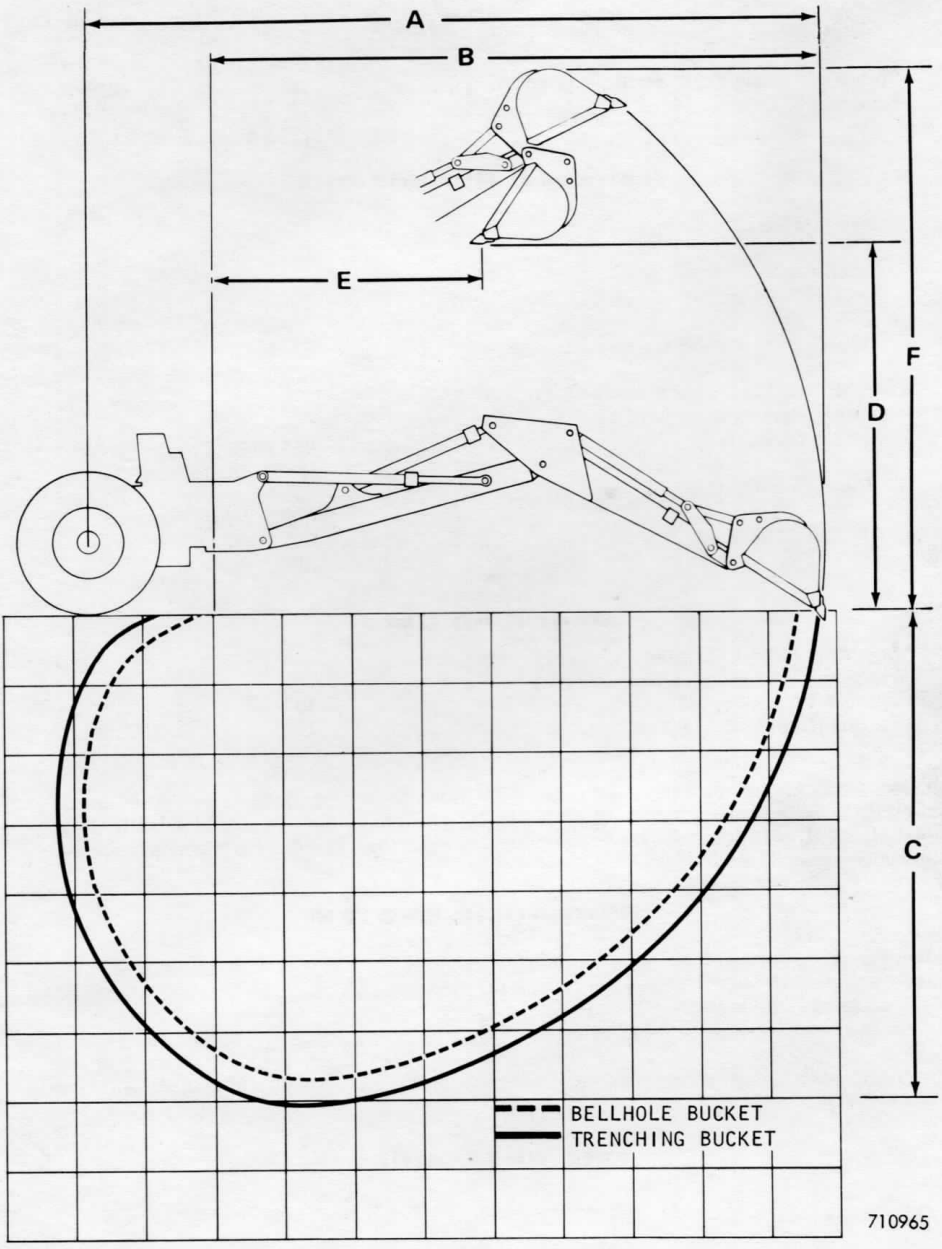

Figure 9

	Retracted	Extended
Stabilizer spread in operating position		
- angled	109" (2769 mm)	109" (2769 mm)
- straight	113" (2870 mm)	113" (2870 mm)
Stabilizer angle from straight position	20°	20°
Ground clearance at backhoe	10-3/4" (273 mm)	10-3/4" (273 mm)

Transport Dimensions

Transport height	11' 9-1/2" (3594 mm)	N/A
Overall width - travel position		
- stabilizers angled	80" (2032 mm)	80" (2032 mm)
- stabilizers straight	89-3/4" (2280 mm)	89-3/4" (2280 mm)
Overall length, loader bucket on ground and backhoe in transport		
- short lip bucket	21' 10-1/2" (6668 mm)	N/A
- long lip bucket	22' 4" (6807 mm)	N/A
- 4-in-1 bucket	22' 2" (6756 mm)	N/A

Operating Data

Leveling angle (maximum grade on which the backhoe will make a vertical cut)		
- stabilizers angled	11°	11°
- stabilizers straight	15°	15°

NOTE: Specifications taken with 24" (610 mm) trenching bucket, 74" (1880 mm) short lip loader bucket, 7.50 x 16 - 10 PR (I1) rib front tires, 14.9 x 24 - 6 PR (R4) rear tires, front 700 lbs (318 kg) counterweight and standard equipment unless otherwise specified.

HYDRAULIC SYSTEM

Hydraulic reservoir refill	11 U.S. gallons (42 liters)
Recommended oil	Case TCH Fluid
Relief valve pressure setting	
Loader control valve main relief	2200 ± 75 psi at full throttle (154,7 ± 3,5 kg/cm²)
Three-point hitch control valve, main relief	1800 ± 50 psi at full throttle (126,5 ± 3,5 kg/cm²)

TIRE PRESSURE

Refer to Tractor Operators Manual.

SHIPPING WEIGHTS

NOTE: The following weights are approximate and without loader bucket or attachment - with backhoe/3-point hitch/counterweight mounting arms.

188D diesel engine and hydrostatic transmission	6314 lbs. (2864 kg)
188D diesel engine and power shuttle transmission	6094 lbs. (2764 kg)
188D diesel engine and dry clutch transmission	5994 lbs. (2718 kg)
188G gasoline engine and power shuttle transmission	6014 lbs. (2728 kg)
159G gasoline engine and dry clutch transmission	5799 lbs. (2630 kg)

NOTE: The following attachment weights are without buckets. See Buckets below for loader or backhoe bucket weights.

Standard backhoe	3425 lbs. (1554 kg)
4' (1219 mm) Extendahoe (see note below)	3920 lbs. (1778 kg)
3-point hitch	645 lbs. (293 kg)
Rear counterweight	1400 lbs. (635 kg)
Front counterweight for Extendahoe	700 lbs. (318 kg)
ROPS Cab	840 lbs. (381 kg)
ROPS Canopy	486 lbs. (220 kg)

NOTE: Extendahoe machines are equipped with 17.5 L x 24, 8 PR rear tires - add 90 lbs. (41 kg) to basic machine weight.

BUCKETS

Loader

Width inch (mm)	Type	Capacities (SAE) Heaped cu. ft. (m^3)	Struck cu. ft. (m^3)	Weight lbs. (kg)
64" (1626)	Long Lip	20.00 (0,57)	17.51 (0,50)	575 (261 kg)
74" (1880)	Short Lip	21.06 (0,60)	17.81 (0,50)	600 (272 kg)
74" (1880)	Long Lip	23.26 (0,66)	20.33 (0,58)	640 (290 kg)
80" (2032)	Short Lip	22.83 (0,65)	19.34 (0,55)	671 (304 kg)
80" (2032)	Long Lip	25.12 (0,71)	21.96 (0,62)	730 (331 kg)
74-3/4" (1899)	4-in-1	23.84 (0,67)	19.62 (0,56)	1040 (472 kg)

Backhoe

Width inch (mm)	Type	Struck capacity cu. ft. (m^3)	Weight lbs. (kg)
12" (305)	Trenching	1.74 (0.05)	200 (91)
18" (457)	Trenching	3.18 (0.09)	240 (109)
24" (610)	Trenching	4.64 (0.13)	270 (122)
30" (762)	Trenching	6.00 (0.17)	350 (138)
36" (914)	Trenching	7.44 (0.21)	345 (156)
18" (457)	HD Trenching	3.50 (0.10)	320 (145)
24" (610)	HD Trenching	4.75 (0.13)	380 (172)
30" (762)	HD Trenching	6.49 (0.18)	410 (186)
36" (915)	HD Trenching	7.75 (0.22)	460 (209)
12" (305)	Bellhole	0.83 (0.02)	130 (59)
16" (406)	Bellhole	0.95 (0.03)	155 (70)
30" (762)	Bellhole	1.93 (0.05)	220 (100)
36" (914)	Bellhole/ Graveyard	2.00 (0.06)	265 (120)
42" (1067)	Shovel	8.70 (0.25)	470 (213)
	"V" Ditch	6.10 (0.17)	450 (204)

OPERATING INSTRUCTIONS

OPERATOR'S SEAT

Figure 10 - Backhoe Operating Position

Figure 10 shows the operator's seat in correct position to operate the backhoe. Figure 11 shows correct seat position for driving or loader operation.

WARNING: Never drive the tractor or use an attachment unless the seat is locked in the correct position.

Seat Adjustments

To swing the seat around, push down on the post lock handle with your foot. Adjust height to suit comfort (there are three height positions), then release the post lock handle. If required, reposition seat slightly until seat locks in place.

The seat can be adjusted forward or rearward with the slide adjusting lever on the side of the seat.

WARNING: Seat spring is under compression in seat column.

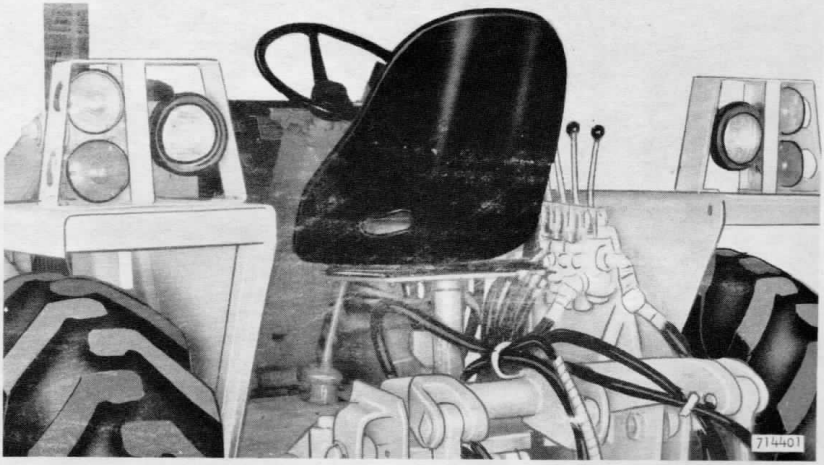

Figure 11 - Seat in Loader Operating Position

LOADER CONTROLS

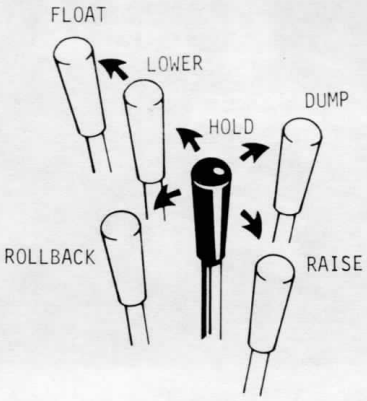

Figure 12 - Lift and Tilt Positions

Refer to Figures 12 and 13 for control lever positions and resulting actions. Uses of Raise, Lower, Rollback, and Dump positions are self-explanatory, Refer to page 16 for uses of the Float and Return-To-Dig Positions.

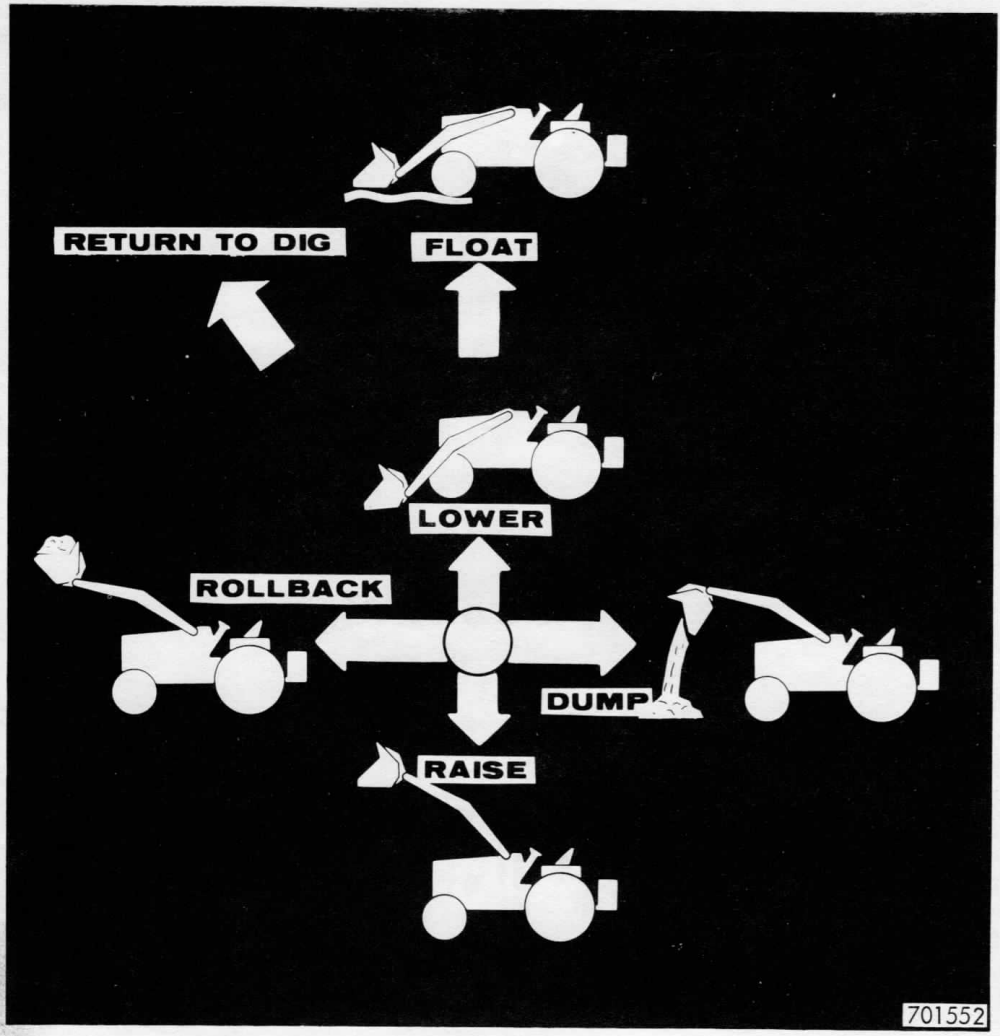

Figure 13 - Lift and Tilt Actions

Float Position

The control lever is mechanically held in Float. Therefore, lowering the bucket in Float leaves the operator free to maneuver the tractor. See the following topic, Return-To-Dig. In addition, Float permits the bucket to follow the contour of the ground if the bucket cutting edge is parallel to the ground or tilted upward.

Return-To-Dig

This machine is equipped with a return-to-dig mechanism which automatically returns the bucket from a dumped position to a digging position, Figure 15. This leaves the operator's hands

free to reposition the machine while the bucket is returning to the digging position.

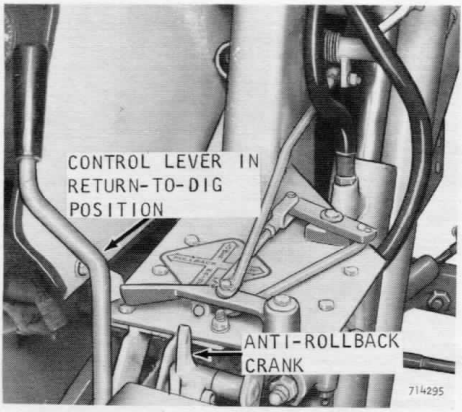

Figure 14 - Return-To-Dig Control

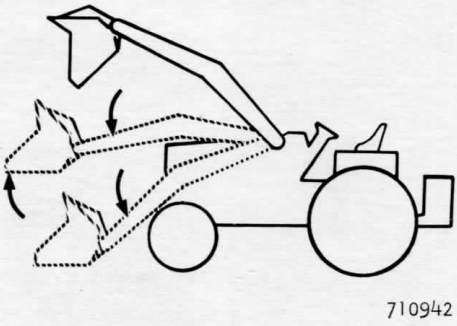

Figure 15 - Return-To-Dig Action

1. When the load has been dumped, move the control lever into the Return-To-Dig position, Figure 14.

2. Move the unit back to the pile. As you do this, the lift arms will lower and the bucket will roll back. Maintain operating speed so that the bucket rolls back to level before it reaches the ground.

3. When the bucket is level, the control lever will automatically kick out of Rollback to Hold. The control lever must be manually released from the Float position.

NOTE: Return-To-Dig is adjustable. See page 66.

Bucket Position Indicator

The loader is equipped with a bucket position indicator on the right hand tilt linkage which enables the operator to determine bucket position without seeing the bucket floor. The bucket is level when the two gauge pointers are lined up. See Figure 16.

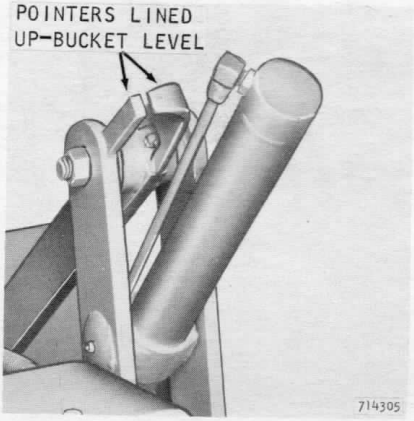

Figure 16 - Bucket Position Indicator

4-IN-1 BUCKET

Clam Control Lever

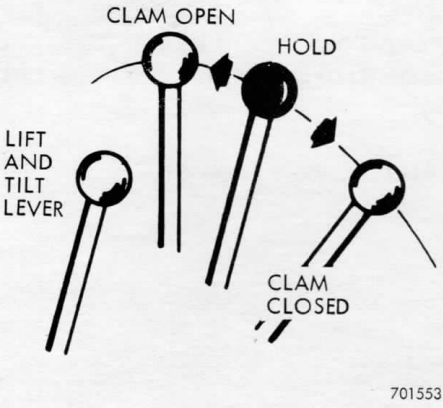

Figure 17 - Clam Positions

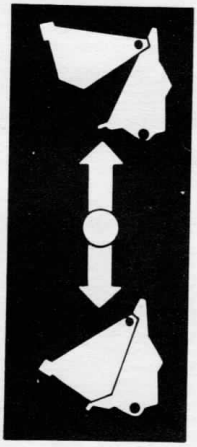

Figure 18
Clam Actions

Loaders equipped with a 4-in-1 bucket have a clam control lever in addition to the lift/tilt control found on standard loaders. Refer to Figure 17 and 18 for control lever positions and resultant actions.

Converting The 4-In-1 Bucket

The 4-in-1 Bucket can be quickly converted from a standard bucket to a blade, scraper, or clamshell by adjusting the bucket tilt and clam opening as shown below. Have bucket on or near the ground when making adjustments. The gauge on the bucket indicates height of the clam above ground in inches when the blade is on the ground.

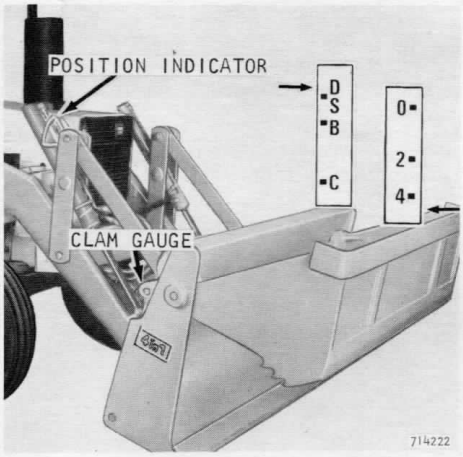

Figure 19 - Blade

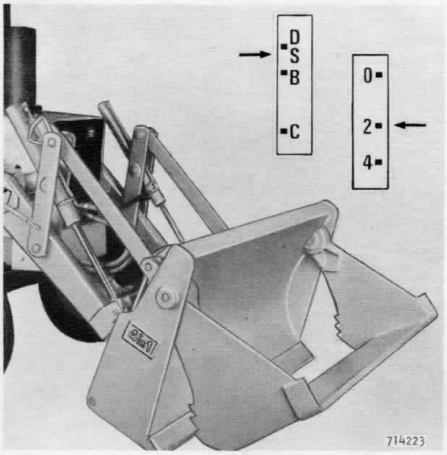

Figure 20 - Scraper

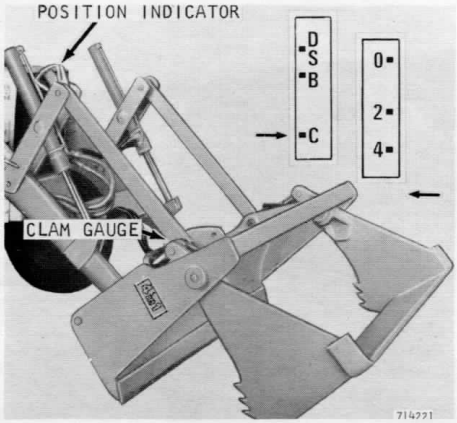

Figure 21 - Clamshell

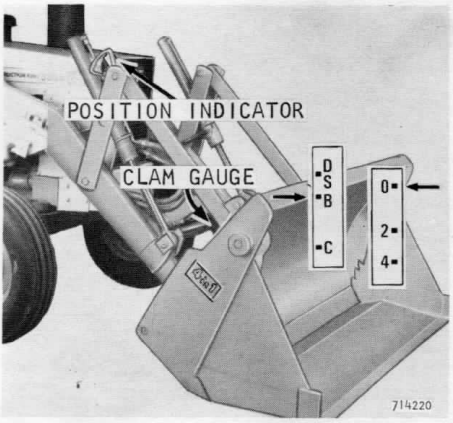

Figure 22 - Standard Bucket

NOTE: See Figure 47 for a few of the many uses of the 4-In-1 Bucket.

THREE-POINT HITCH CONTROLS

The modular three-point hitch is equipped with four hydraulic controls. The lift, pitch, and tilt levers are used to position the hitch. The implement lever is used to control a hydraulically operated attachment, such as a scarifier or rake.

The lift control lever is mechanically held when in Float--the lever must be pulled to release it from this position.

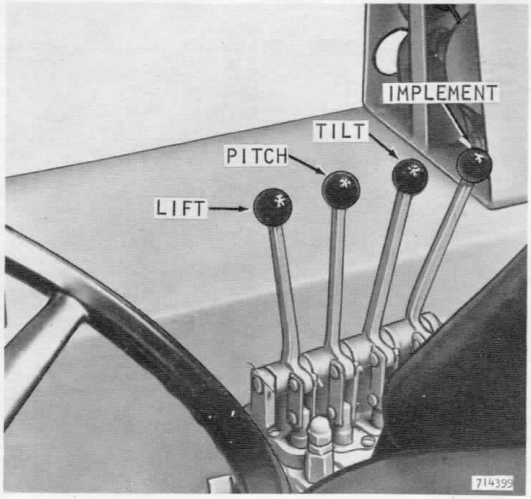

Figure 23 - Hitch Controls

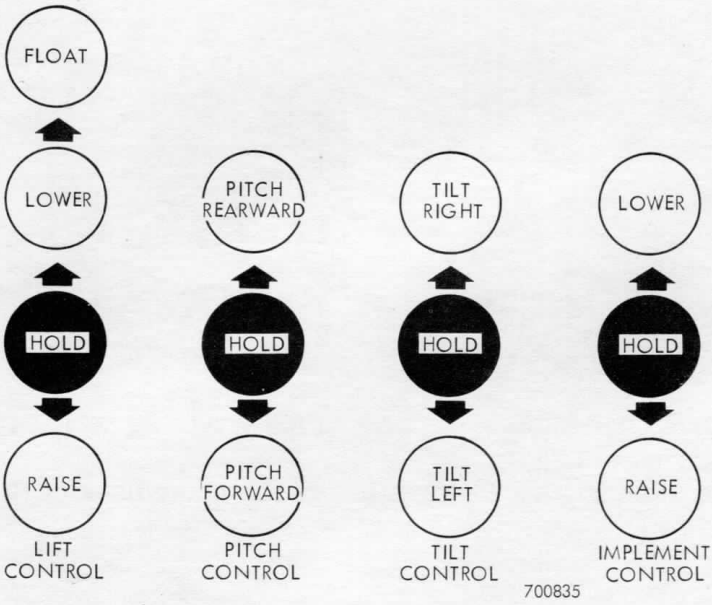

Figure 24 - Lever Movements

BACKHOE CONTROLS

Standard Levers With Foot Swing

Used in first production of this model.

Figure 25 illustrates the control lever positions and resulting backhoe action.

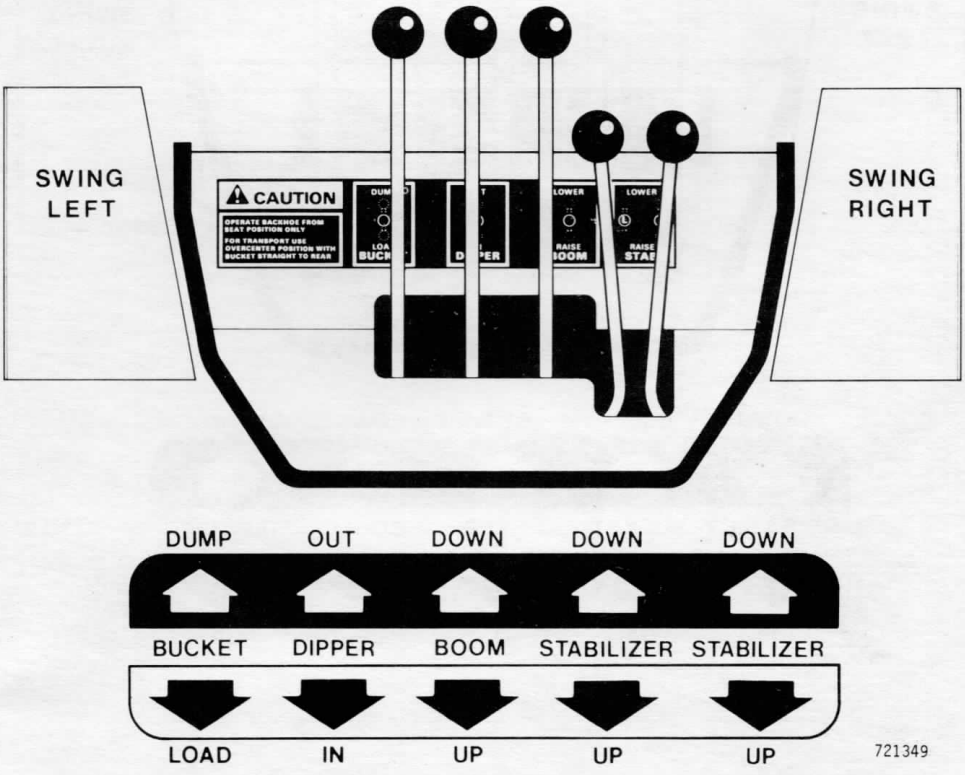

Figure 25

Standard Levers With Foot Swing

Used in later production of this model.

Figure 26 illustrates the control lever positions and resulting backhoe action.

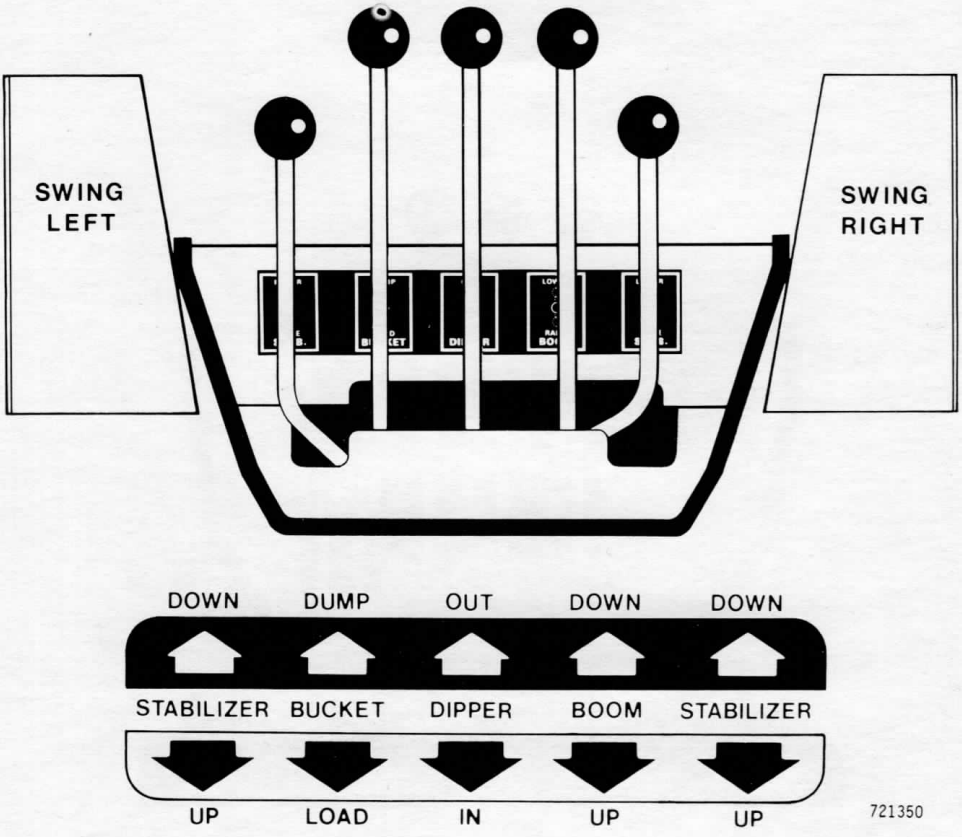

Figure 26

Optional Twin Levers

Figure 27 illustrates the control lever positions and resulting backhoe action.

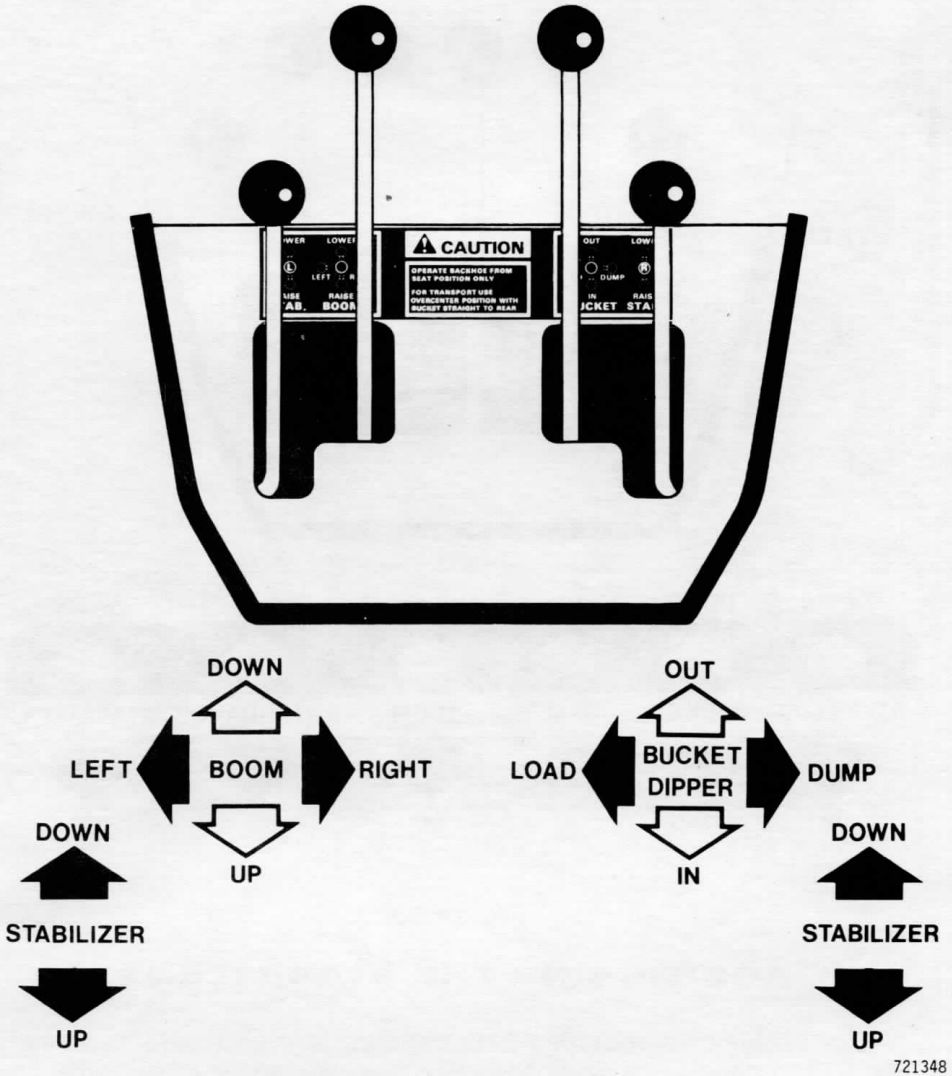

Figure 27

Units With Four-Foot Extendahoe

Figure 28 illustrates the control lever positions and resulting backhoe action. For Extendahoes equipped with only five control levers, see page 29.

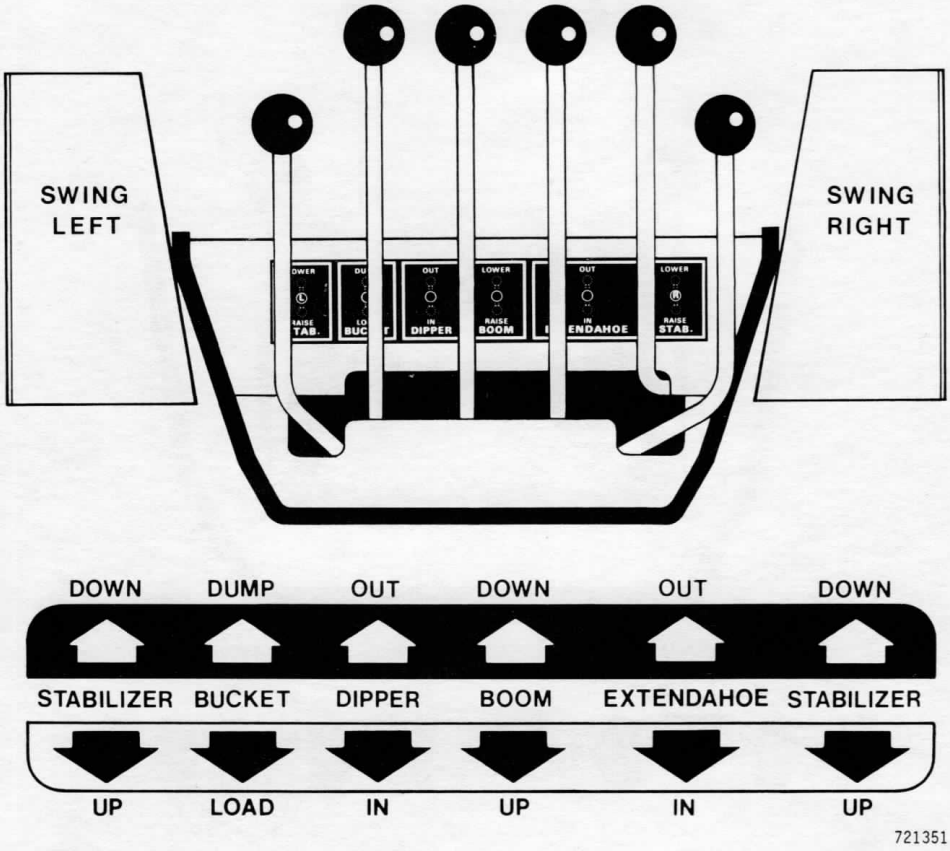

Figure 28

POSITIONING THE STABILIZERS

The backhoe is equipped with adjustable stabilizers and reversible pads. Whenever possible, use the angled position with pads rearward as shown for the most stability. With stabilizers positioned at right angles to the backhoe and the pads forward as shown by dotted lines, the operator can dig right up to the machine.

NOTE: Use caution when swinging the backhoe to extreme right or left. Under some conditions, the backhoe may strike the stabilizers or tractor.

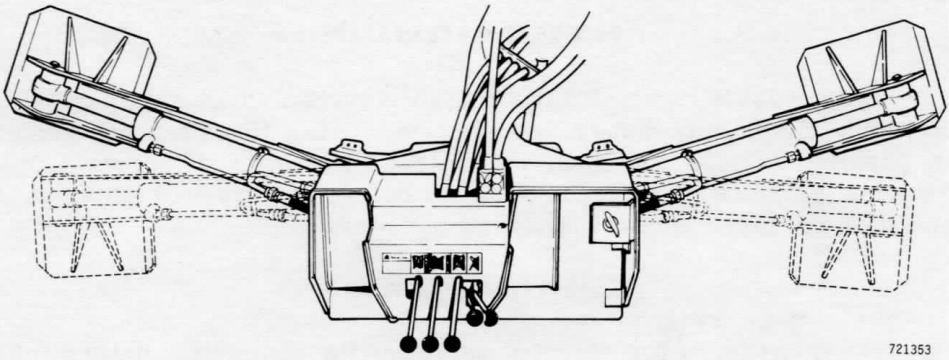

Figure 29 - Stabilizer Positions

Adjusting the Stabilizers

1. Position the stabilizer clear of the ground.
2. Remove the retainer pin.
3. Drive the pivot pin to the outside just far enough to turn the stabilizer and line up the opposite pin hole.
4. Drive the pivot pin in place and install the retainer pin.
5. Repeat for the opposite stabilizer.

Reversing Stabilizer Pads

1. Lower stabilizer until the pad just touches the ground.
2. Remove snap ring and stabilizer pad mounting pin.
3. Reverse pad, then reinstall mounting pin and snap ring.

IMPORTANT: Use caution when swinging the backhoe to the extreme right or left. Damage may result due to the possibility of interference with the stabilizers.

HYDRA-GUIDE

Hydra-Guide is a hydraulic guidance system which automatically controls the boom, dipper, and bucket during the time the bucket is passing through the soil. To achieve this automatic control, the backhoe must be properly positioned before the start of each cycle and then operated according to instructions.

Selector Valve

The position of the selector valve handle, Figure 30, determines the type of digging which the backhoe will perform.

Selector Valve in Manual Position

When the selector valve is placed in Manual, Figure 30, all backhoe functions must be performed manually.

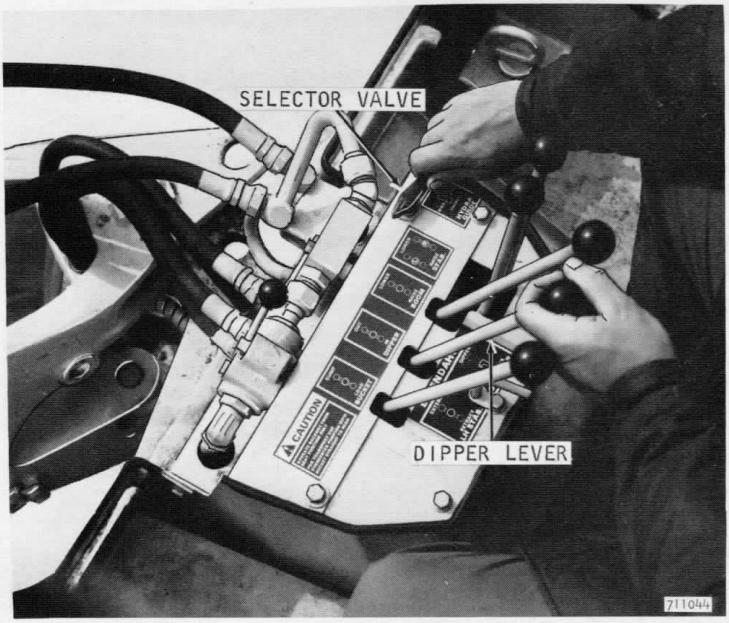

Figure 30 - Selector Valve

Selector Valve in Dig Position

To dig trenches, basements, and excavations of all kinds automatically, place the selector valve in Dig position.

When the trench, basement, etc has been dug, place the selector valve in Trench position and finish the job by leveling and raking the bottom. See following topic.

To operate the backhoe with the selector valve in Dig:

1. Run engine at full throttle. Position the stabilizers and loader bucket as recommended on pages 25 and 48.

2. Position the backhoe as shown in Figure 31. It is important that the backhoe be in a good digging attitude before starting each cycle. Experience will be required to learn the best possible digging attitude for your machine and soil conditions. If the backhoe is not positioned properly, the cut may be too shallow or the Hydra-Guide may fail to function.

3. Pull the dipper lever to crowd and hold it in this position. The backhoe will operate automatically until the bucket is filled.

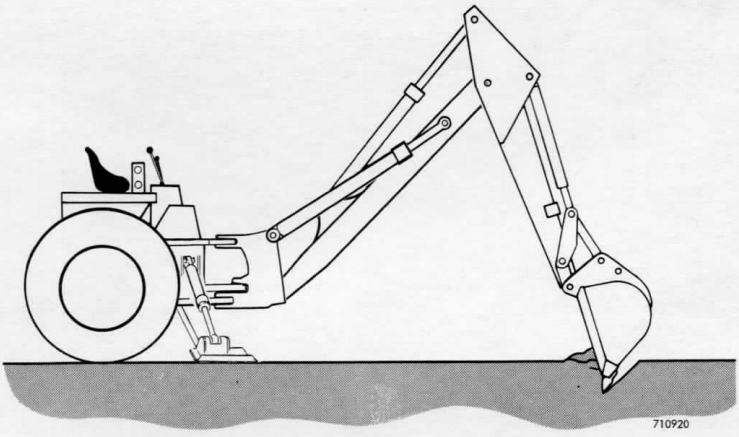

Figure 31 - Backhoe Position For Dig

NOTE: The Hydra-Guide system can be overridden at any time by manually operating the controls. It is NOT necessary to place the selector valve in Manual.

4. When the bucket is full, take over manually and unload the bucket.

5. Reposition the backhoe manually for the next cycle.

6. To level or rake the bottom of the trench or excavation, place the selector valve in Trench. See following topic.

Selector Valve in Trench Position

Trench position is used to obtain a flat bottomed trench. When the selector valve is in Trench, the backhoe levels and rakes the soil by making a flat, shallow pass.

To operate the backhoe with the selector valve in Trench:

1. Run engine at full throttle.

2. Position the backhoe as shown in Figure 32. As explained under step 2, page 27, the starting position of the backhoe is very important.

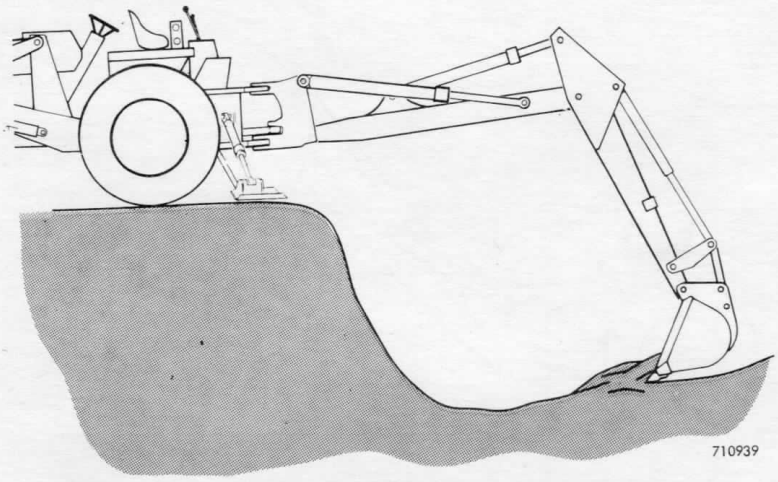

Figure 32 - Backhoe Position For Trench

3. Pull the dipper lever to crowd and hold it in this position. The backhoe now will automatically make a shallow pass through the soil, leveling and raking the bottom of the cut.

4. When the boom starts to raise at the end of the pass, take over manually and unload the bucket.

5. Reposition backhoe manually for the next cycle.

FOUR FOOT EXTENDAHOE

On units equipped with the 4' Extendahoe, the backhoe can be converted hydraulically from a 14-1/2 foot to an 18-1/2 foot backhoe when extra digging depth, reach, or loading height is required.

WARNING: Do not extend the dipper unless the stabilizers are lowered to the ground.

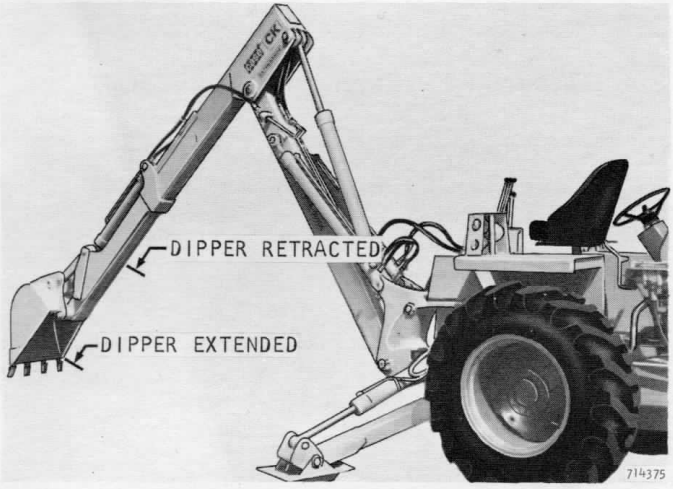

Figure 33 - Extendahoe Positions

Extendahoe Operation

Units With Diversion Valve Lever

To operate the Extendahoe:

1. Lower stabilizers to the ground.
2. Push the diversion valve lever down, Figure 34.
3. With engine running at normal speed for backhoe operation, push or pull the left hand stabilizer control lever until the dipper reaches the desired length.
4. Pull out the diversion valve lever so the left hand stabilizer can be operated.

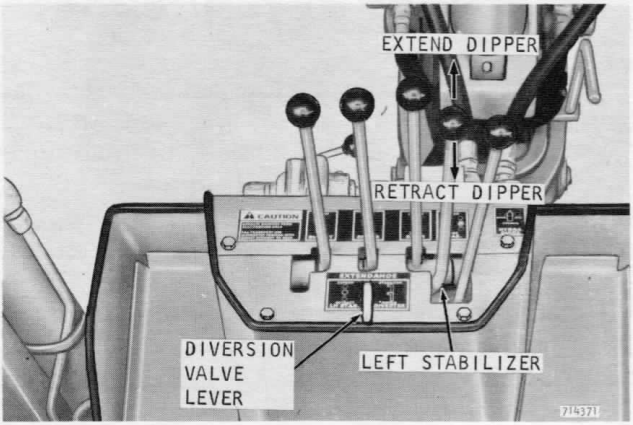

Figure 34 - Extendahoe Controls

Units With Extendahoe Control Lever

To operate the Extendahoe:

1 Lower stabilizers to ground.

2 With the engine running at normal speed for backhoe operation, push or pull the control lever shown in Figure 35 until the dipper reaches the desired length.

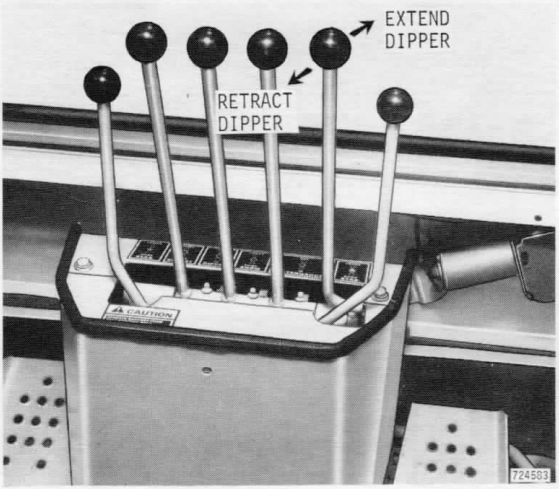

Figure 35 - Extendahoe control lever

BOOM LOCKOUT

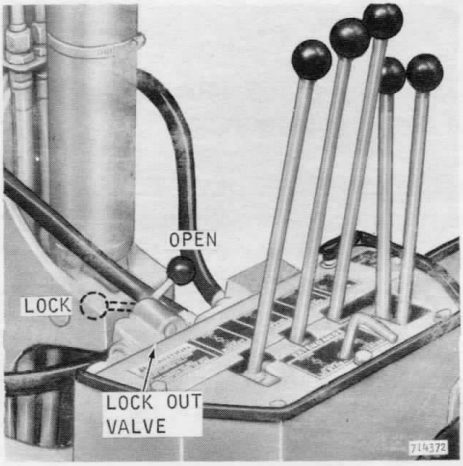

Figure 36

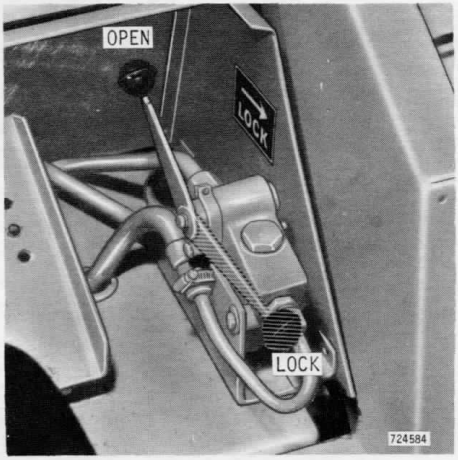

Figure 37

The backhoe dipper can be used as a crane to handle heavy objects. The boom lockout system increases the load capacity which the backhoe can handle in this application. Boom lockout is available from your Authorized Case Dealer for field installation.

NOTE: Figure 36 shows the early production phase of the boom lockout system and Figure 37 shows changes which were made for later production.

The lockout valve controls the system. To crane with the backhoe, move the valve handle to Lock position. The boom cannot be lowered with the valve in Lock position. For regular backhoe operation, move the valve handle to Open position.

WARNING: Extreme caution must be used when handling heavy loads. Avoid swinging the load to the right or left of center. Do not crane with the backhoe using the boom transport latch. Always have stabilizers lowered and in the angled position, Figure 29, when craning.

NOTE: Use caution when moving the dipper control to Out position with the boom in the over-center position. The dipper may strike the roof of cab equipped units.

ROLL-OVER PROTECTIVE STRUCTURE

Your machine is equipped with a roll-over protective structure (hereafter referred to as ROPS).

ROPS data can be determined from the ROPS label. This label is located above the operator's head on a crossmember.

In addition to the serial number of the ROPS, this label shows the industry standard to which it conforms, the maximum weight of the vehicle on which the ROPS is approved for use, the state or provincial approval numbers (if used), and the model/models for which it is intended.

As an owner or operator of a ROPS equipped machine, several points are extremely important if you are to gain all the benefits of ROPS.

Seat Belts with ROPS

Seat belts are an integral part of your protective system and must be worn at all times.

Accidental Upset with ROPS

ROPS is an energy absorbing safety device. Once it has been subjected to an upset or some other form of impact (such as striking an overhead abutment during travel), it must be replaced so that you will have the same degree of protection originally provided.

ROPS, the operator's seat, the seat belts and their respective mountings and any accessories within the operator protective system, must be very carefully inspected after an upset. All broken or damaged parts must be replaced immediately. DO NOT ATTEMPT TO STRAIGHTEN OR WELD ROPS.

ROPS Maintenance and Inspection

Every 500 hours or twice yearly, whichever comes first, the following should be performed:

1. Check torque on ROPS mounting bolts and retorque to specifications if required. Refer to the following illustration.

2. Inspect the operator's seat and seat belt mounting. Tighten bolts to specifications. Replace damaged or worn parts.

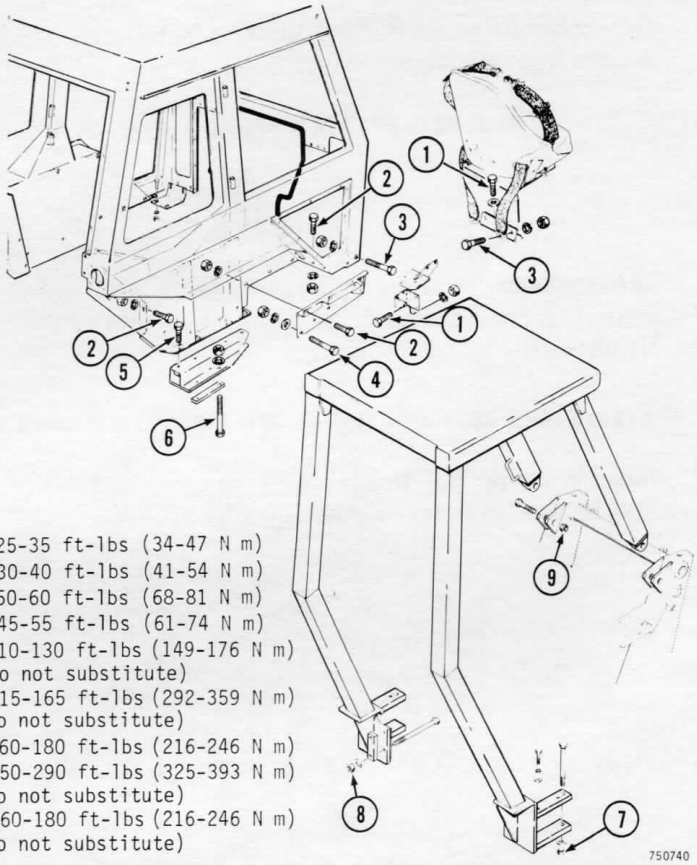

TORQUES

1. 3/8" NC ..... 25-35 ft-lbs (34-47 N m)
2. 3/8" NF ..... 30-40 ft-lbs (41-54 N m)
3. 7/16" NF ..... 50-60 ft-lbs (68-81 N m)
4. 7/16" NC ..... 45-55 ft-lbs (61-74 N m)
5. 1/2" NF .....110-130 ft-lbs (149-176 N m)
   (Grade 8 - do not substitute)
6. 5/8" NF .....215-165 ft-lbs (292-359 N m)
   (Grade 8 - do not substitute)
7. 5/8" NC .....160-180 ft-lbs (216-246 N m)
8. 5/8" NC .....250-290 ft-lbs (325-393 N m)
   (Grade 8 - do not substitute)
9. 1" NC .....160-180 ft-lbs (216-246 N m)
   (Grade 8 - do not substitute)

Figure 38 - ROPS Bolt Torque

ROPS Safety Precautions

1. Keep the ROPS and mounting parts in the original factory built condition. Do not modify the ROPS by welding, grinding adding attachments or drilling holes. These will weaken the structure and reduce your protection.

2. Do not install attachments that will cause the total gross weight of the machine to exceed the weight shown in the "for maximum gross vehicle weight" space on the ROPS label.

3. Special hardware is often used for mounting and anchoring ROPS. Replacement parts must be those listed in the Case Parts Catalog.

4. The battery must be equipped with nonspill caps. If fuel tank or hydraulic reservoir fill caps are replaced, use Case replacement parts.

5. Do not remove the rollover protective structure except for servicing. Properly reinstall before using machine.

TRANSPORTING THE BACKHOE

WARNING: Check overhead and side clearances carefully when moving the machine. See pages 10 and 12 for loader and backhoe dimensions in transport.

Placing Backhoe In Transport Position

Before using the loader or transporting the machine, place the backhoe in the position shown in Figure 39.

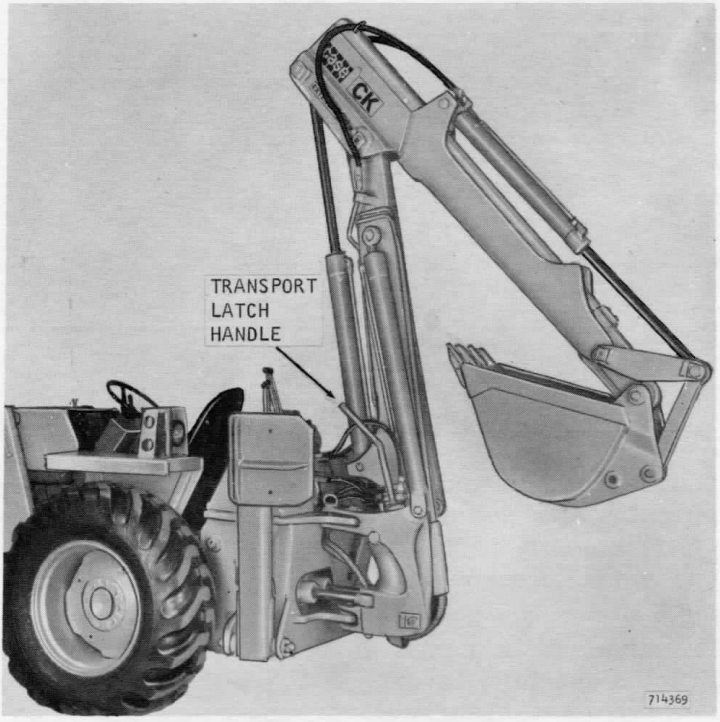

Figure 39 - Transport

NOTE: Use caution if operating the swing controls when the backhoe is in transport position. If swung to extreme right or left, the backhoe may strike the stabilizers.

Placing the backhoe in transport position requires that the boom be moved "over center". This means that the boom is moved beyond its vertical position and actually is starting to lower when it hits the stops. The technique for moving the boom "over center" may require practice to master.

1. Start the engine. Lower the stabilizers to the ground. Position the boom straight to the rear. Insert swing lock pin.

2. Extendahoe: Retract dipper to its shortest length.

3. Partially raise the boom, then curl the bucket and pull in the dipper, Figure 39. If unit is equipped with a cab, the dipper must be pulled in completely.

4. Move boom "over center" against the stops:

   a. Run engine at 1000 to 1200 rpm.

   b. Pull the boom control lever all the way back to Raise.

   c. The moment the boom is vertical, reverse the control lever quickly to Lower. If this movement is properly timed, the boom will continue forward against the stops and the boom transport latch will engage.

5. Fully raise the stabilizers.

6. For highway or street travel, attach an SMV emblem to the rear of the backhoe. This emblem can be purchased from your Authorized Case Dealer.

Moving Boom Out Of Transport

1. Run engine at 1000 to 1200 rpm. Lower stabilizers to ground.

2. Pull and hold the boom transport latch handle, Figure 38.

3. While holding the handle back, move the boom control lever to the Raise position. When the boom starts "over center", move the lever to the Lower position and continue to lower the boom.

4. Remove the swing lock pin and store it in the bracket by the lower right swing pedal or foot rest.

Loading Unit Onto Trailer

The proper method of loading the unit onto a tilt bed trailer is shown in Figure 40. If a stationary bed trailer is used and the unit must be driven up a ramp, back the unit up the ramp. Always have the backhoe in transport position when loading or unloading.

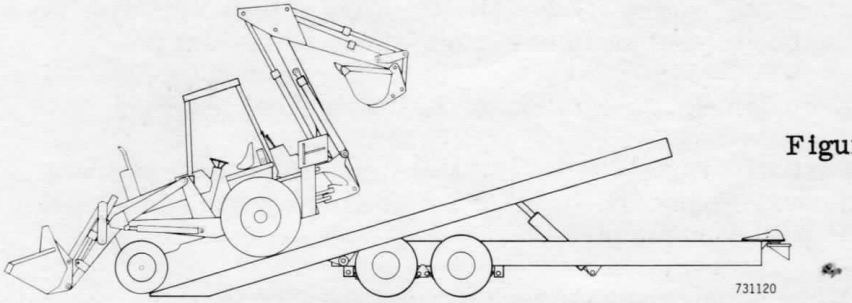

Figure 40

BACKHOE REMOVAL

1. Park the tractor on a hard level surface and lower the loader bucket to the ground.

2. Start the engine and form a tripod as shown in Figure 41. Lower the stabilizers until they just touch the ground.

   NOTE: The stabilizers have a two position pivot. The backhoe can be removed with the stabilizers in either position.

Figure 41 - Backhoe In Tripod Position

3. At the rear of the tractor there are two tension rod assemblies. Loosen the nut on top of each rod, Figure 42.

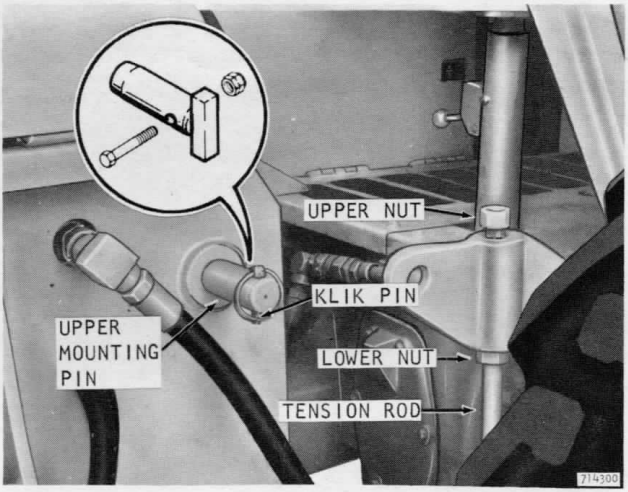

Figure 42 - Tension Rod Assembly

4. Loosen the lower nut on each tension rod. Remove the retaining bolts or klik pins from the upper mounting pins. Disconnect the dipper light wire if so equipped.

5. Start the engine and raise or lower the boom as required (which tips the backhoe mounting frame in or out) to remove backhoe weight from the upper mounting pins and drive the pins out. It may be necessary to use the stabilizers to level the mounting frame.

6. With the stabilizers, raise the backhoe until the lower mounting studs are clear of the lower support arms.

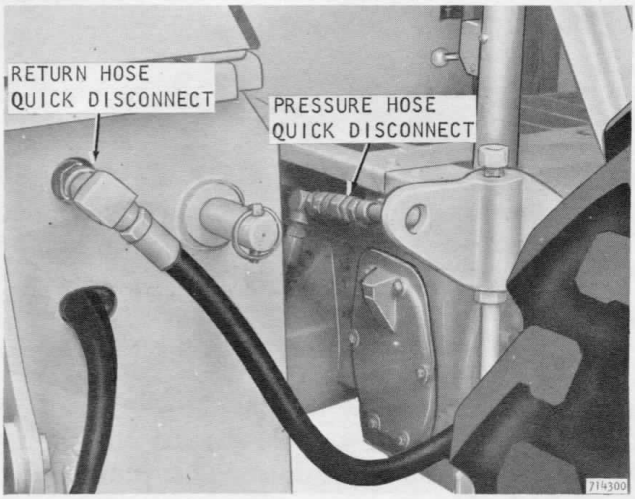

Figure 43 - Quick Disconnect Couplings

7. Slowly and carefully drive the tractor forward about one foot. Stop the engine and disconnect the pressure and return hoses at the quick disconnect couplings, Figure 43.

8. Connect the return hose to the pressure tube on the tractor, Figure 44. The tractor is now ready to drive away.

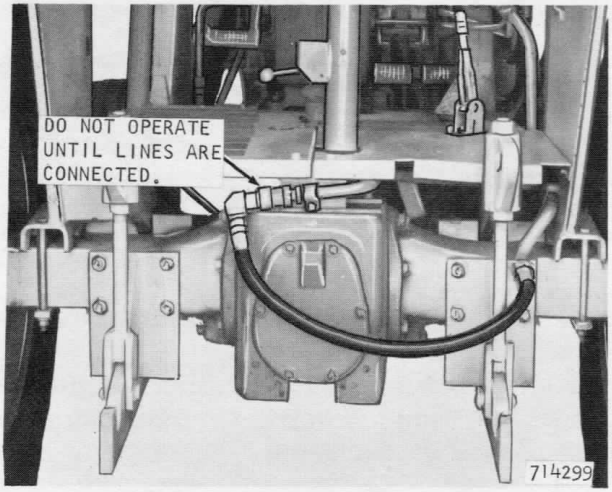

Figure 44 - Hydraulic Line Connection On Tractor

BACKHOE INSTALLATION

1. Line up the tractor with the backhoe and back up close to the mounting frame.

2. Stop the engine and connect the hydraulic lines, Figure 43. Be sure the couplings are fully engaged.

3. Very carefully back the tractor into the backhoe. If necessary, raise the backhoe with the stabilizers. Lower the backhoe onto the lower support arms.

4. Carefully raise or lower the boom (which tips the mounting frame in or out) to align the mounting pin holes in the upper support arms and the mounting frame. It may be necessary to use the stabilizers to level the mounting frame. Drive in the mounting pins and install the klik pins or retaining bolts.

5. Make sure the lower nuts on the tension rods do not contact the upper support arms, and torque the upper nuts to 140-170 foot-pounds. Then tighten the lower nuts until snug and retorque the upper nuts to 450-550 foot-pounds.

6. Connect dipper light wire if so equipped.

THREE-POINT HITCH REMOVAL

1. Locate the machine on level surface, and lower and level the implement. Then raise the seat so the seat adjusting lever will not catch in hoses from control valve.

2. At the rear of the tractor there are two tension rod assemblies, Figure 45. Loosen the upper and lower nuts on each tension rod. Then remove the klik pins from the upper mounting pins.

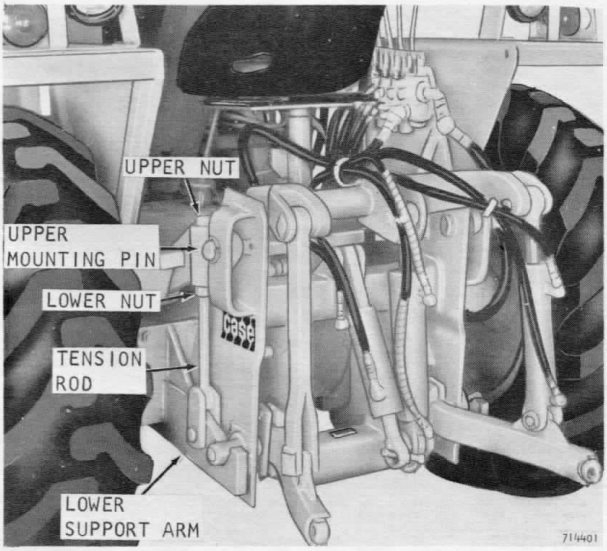

Figure 45 - Hitch Removal

3. Use the lift and pitch control levers as required to remove the weight of the hitch from the upper mounting pins. Then drive the mounting pins out.

4. Remove the hitch from the lower support arms:

   a. If the rear mounted implement weights less than 500 pounds, use a hoist or jack to lift the hitch out of the lower support arms. Raise the hitch until the control valve mounting arm clears the tension rod. See Figure 46.

   b. If the rear mounted implement weights more than 500 pounds, use the lift cylinder to raise the hitch out of the lower support arms. Place two jack stands under the lower draft arms about half way out. Slowly move the lift control

lever into the Lower position. Raise the hitch until the control valve mounting arm clears the tension rod.

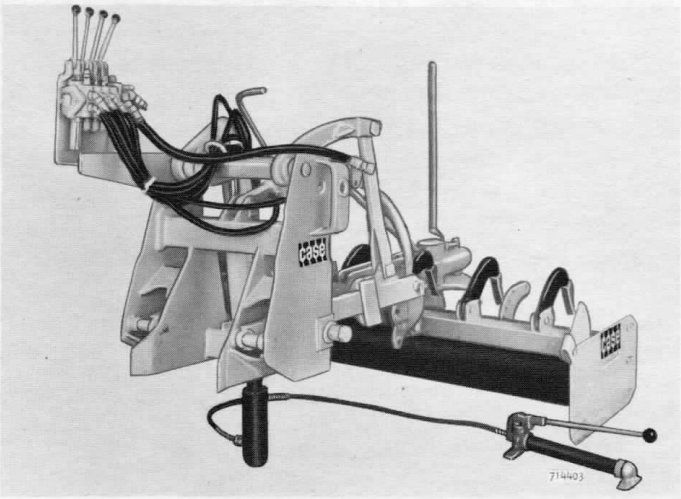

Figure 46 - Hitch Raised With Jack

5. Carefully drive the tractor forward about one foot. Stop the engine and disconnect the pressure and return hoses at the quick disconnect couplings.

6. Connect the return hose to the pressure tube on the tractor, Figure 47. Be sure the coupling is fully engaged. Carefully drive the tractor away from the hitch.

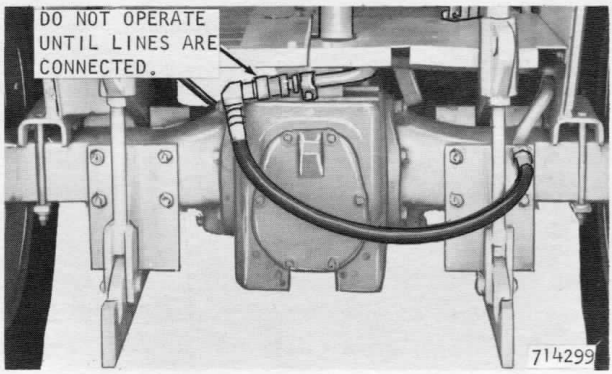

Figure 47 - Hydraulic Line Connection On Tractor

7. If the hitch is to be left standing for an extended period of time, block up the hitch as shown in Figure 48 to prevent loss of position.

IMPORTANT: It is possible that some attachments (not approved or manufactured by J I Case) may strike the hitch or tractor when one of the cylinders is moved to the end of a stroke. Test all attachments for this condition by operating controls. If the condition exists, see your Authorized Case Dealer.

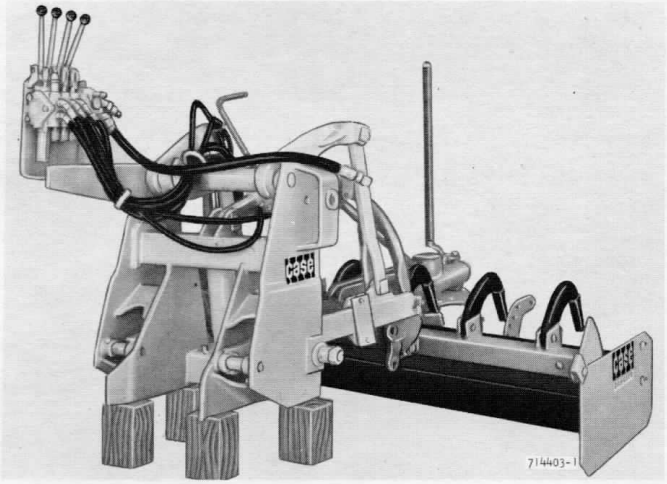

Figure 48 - Hitch Prepared For Storage

THREE-POINT HITCH INSTALLATION

1. Align the tractor with hitch and raise the seat high enough to prevent the seat adjusting lever from catching in the hoses from the control valve.

2. Back the tractor into the hitch until the hitch mounting frame enters the lower support arms. Stop the engine and connect the hydraulic lines to and from the control valve.

3. Carefully back the tractor completely into the hitch. Then lower the hitch into the lower mounting arms.

4. Use the lift and pitch control levers as required and align the mounting frame with the upper support arms.

5. Drive the upper mounting pins in and secure in place with klik pins.

6. Make sure the lower tension rod nuts do not contact the upper support arms and torque the upper nuts to 140-170 foot-pounds.

7. Tighten the lower tension rod nuts until snug and retorque the upper nuts to 450-550 foot-pounds.

COUNTERWEIGHT

A 1400 pound counterweight is available for use when the Backhoe is removed. The counterweight mounts on the existing rear support arms. If the machine is equipped with a three-point hitch and is to be used as a loader for an extended period of time, it is recommended that the hitch be removed and the counterweight installed to improve stability.

To install:

1. Attach a chain hoist to the counterweight and position it on the lower support arms.

WARNING: Do not remove chain hoist from counterweight until the upper mounting pins have been installed.

2. Align the upper mounting pin holes in the upper support arms and counterweight, and install the mounting pins. Secure mounting pins in place with Klik pins.

3. Make sure lower tension rod nuts are loose and torque the upper nuts to 140-170 foot-pounds.

4. Snug up the lower nuts and retorque the upper nuts to 450-550 foot-pounds.

Figure 49 - 1400 Pound Counterweight

OPERATING TIPS

LOADER OPERATION

Review the following tips on loading techniques. They'll help you move more yardage with less wear on the machine and less effort for you.

Return-To-Dig

As stated previously in this manual, the return-to-dig feature returns the bucket to the digging position after the bucket has been dumped. Return-to-dig is the combined actions of float and rollback--after the bucket has been dumped move the control lever to the far left and forward and the bucket will return to the digging position. Make use of this feature as often as possible as it allows the operator to concentrate on maneuvering the machine, thus reducing cycle time.

Transporting

Whenever the bucket is loaded, carry the bucket just high enough to clear obstacles in the machine's path. Carrying the bucket higher than required results in reduced vision, stability and traction.

WARNING: Never transport a load with the bucket fully raised. Adjust travel speed to work site conditions.

Job Layout

If necessary, spend the required time to level the work area. Smooth roadways for the loader and a level parking area for trucks will speed up the job.

Keep transport distances as short as possible. Proper spotting of the truck results in increased operating efficiency.

Figure 50 shows a proven method of spotting trucks for loading speed and efficiency.

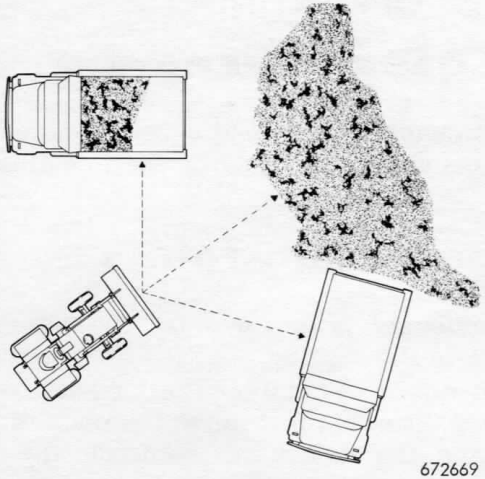

Figure 50 - Job Layout

Filling The Bucket

Approach the material with the transmission in low and the bucket level with the ground (use the bucket position indicator as a guide). The approach speed is largely determined by the density of the material being loaded.

Enter the material with the bucket level and on the ground (control lever in float or hold). If the bucket is tilted up or down, a pushing action occurs resulting in shallow penetration and a partially filled bucket. As the bucket penetrates the material, alternately raise and roll back the bucket. Roll the bucket back a few degrees at a time to prevent the pushing action previously mentioned and aid in completely filling the bucket. If the bucket penetrates so deep that the bucket cannot be raised or rolled back, back away slightly.

Alternating the raise and rollback actions is recommended even though the two actions can be combined by pulling the control lever to the rear and left. The cylinders meeting the least resistance will move first and this could result in a partially filled bucket.

If the bucket is close to complete penetration, such as loading gravel, roll the bucket back; then raise for a full bucket.

Engine Speed

For maximum efficiency, run the engine at full throttle when filling or dumping the bucket. If the machine is equipped with a power shuttle, depress the clutch pedal as required to maintain maximum engine speed.

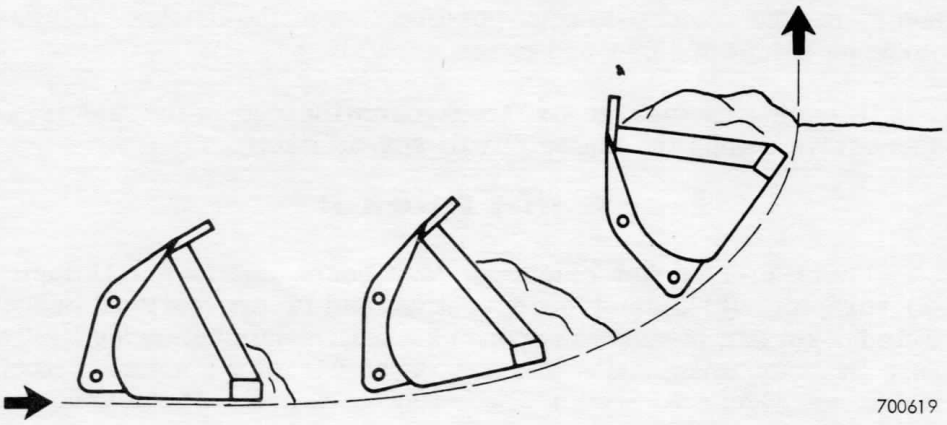

Figure 51 - Filling The Bucket

Dumping The Bucket

When dumping a load into a truck or hopper, gradually spill the load from the bucket to ease the strain of added weight on the truck or hopper. Dumping a load quickly in one mass puts a severe strain on the truck or hopper.

If part of the load remains in the bucket, knock the bucket against its stops to loosen the remaining material.

Digging Or Excavating

When digging, position the bottom of the bucket at a slight downward angle to aid in penetration. Lower the bucket and as the cutting edge nears the desired depth, level the bucket by utilizing the rollback and lowering actions. When the bucket is full or the pass completed, roll the bucket back and raise it to a safe transport height. Carry the load to the dump site.

If maintaining a grade is necessary, drive the machine in low gear with the engine at about half throttle to make a more accurate cut. Adjust bucket position as required by raising or lowering the bucket.

Truck Loading

Whenever possible, park the truck with the wind at your back. This will eliminate dirt and dust blowing into your face.

Start raising the bucket so it will clear the side of the truck at the time of arrival. Continue raising, and dump the bucket at

the same time. Back away from the truck and place the control lever in the return-to-dig position. Stop the bucket at a safe carrying height and proceed to the work site.

If loading an average size truck, dump the load in the middle. On successive dumps the material will spread itself.

4-In-1 Bucket

The 4-In-1 bucket combines four basic functions: (1) dozing, (2) scraping, (3) clam type operation, and (4) conventional bucket. This bucket can perform a variety of tasks, the number being limited only by your imagination and the capability of the machine itself. Refer to Figure 53 which illustrates only a few of the tasks that can be performed.

Refer to Figure 52. Tilt the bucket as required to align the pointer with the desired position: D-dozer, S-scraper, B-bucket and C-clam. The bucket must be close to or on the ground when selecting desired position.

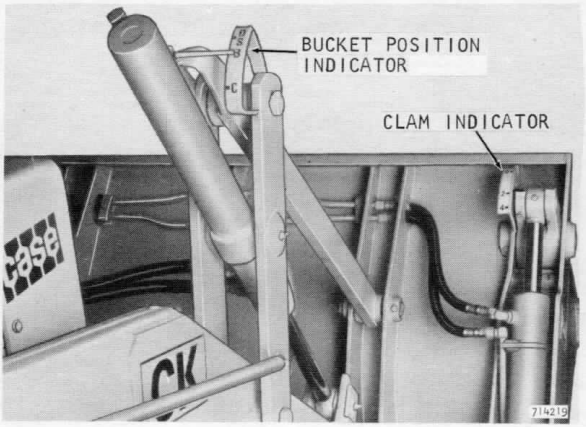

Figure 52 - Bucket Position Indicators

The clam can be open or closed in the dozer position depending on the work being performed. Open the clam if a smooth surface is required.

In the scraper position the bottom of the blade cutting edge is about 2 inches below the rear cutting edge of the clam at position 2 and 4 inches at position 4.

When scraping, clam position will determine the depth of the cut and when spreading it controls the depth of the material being spread.

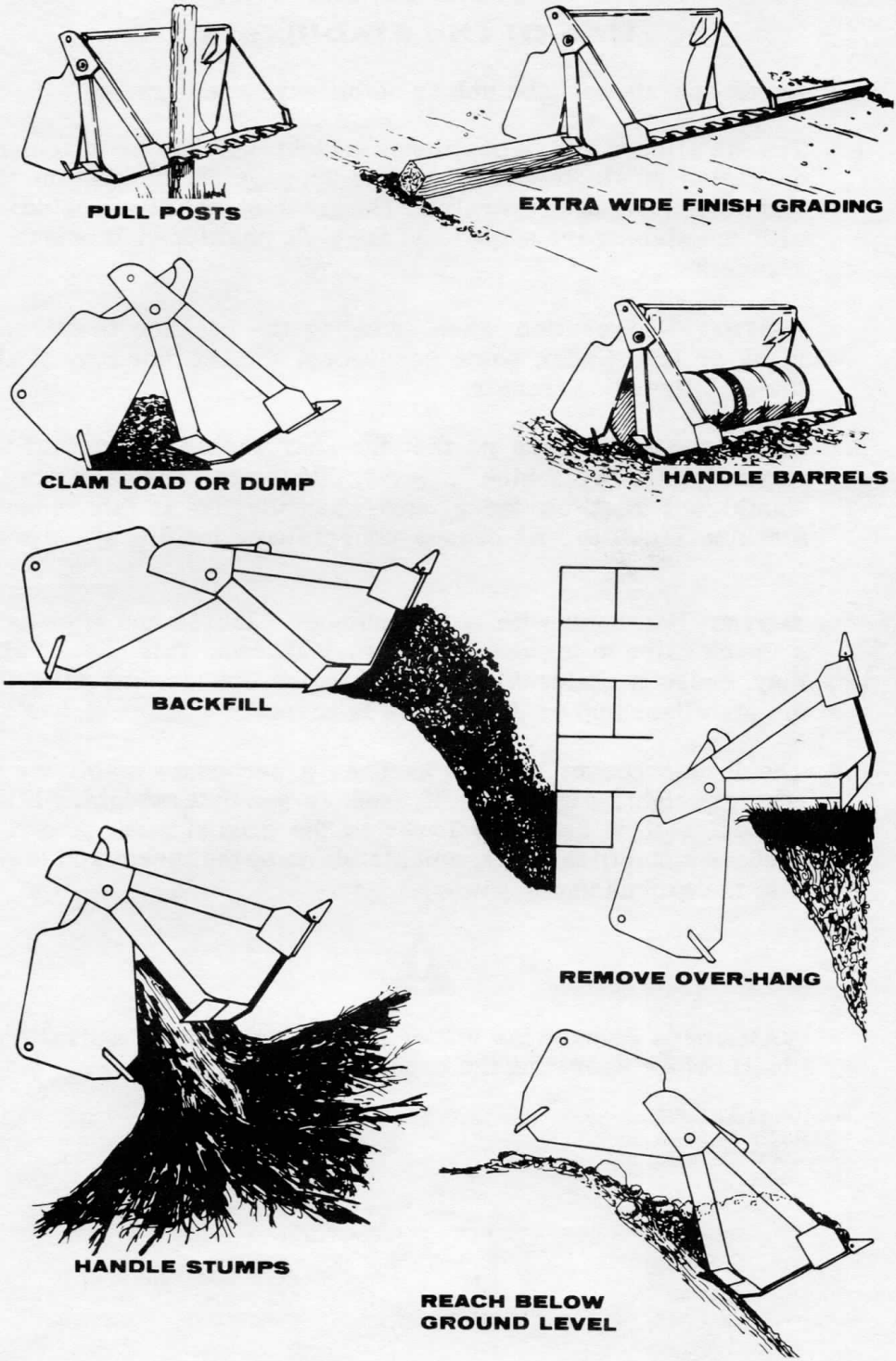

Figure 53 - 4-in-1 Bucket Uses

BACKHOE OPERATION
Use Of The Stabilizers

Never operate backhoe unless stabilizers are lowered.

1. The stabilizers can be positioned at right angles to the machines or angled 20° to the rear, Figure 29, page 25. In addition, the stabilizer pads are reversible. The greatest stability is achieved with the stabilizers angled and the pads positioned as shown in Figure 29.

   NOTE: Use caution when swinging the backhoe to extreme right or left. Under some conditions, the backhoe may strike the stabilizers or tractor.

2. Lower the stabilizers so that the rear wheels are just off the ground and the machine is level, Figure 54. The rear wheels should not rest on the ground when digging as this reduces machine stability and causes unnecessary loading of the rear tires.

   NOTE: Backhoes with serial number 5222135 and after have a check valve to prevent stabilizer leakdown. This check valve may cause a noticeable drop in engine speed when powering the stabilizers up or down. This is normal.

3. The loader bucket may be used as a secondary stabilizer or counterweight, Figure 54. If used as a counterweight, fill the bucket, roll it back and lower to the ground under power. If used as a stabilizer only, completely dump the bucket and lower it to the ground under power.

WARNING: Be sure the loader control lever is in Neutral (not Float) before operating the backhoe.

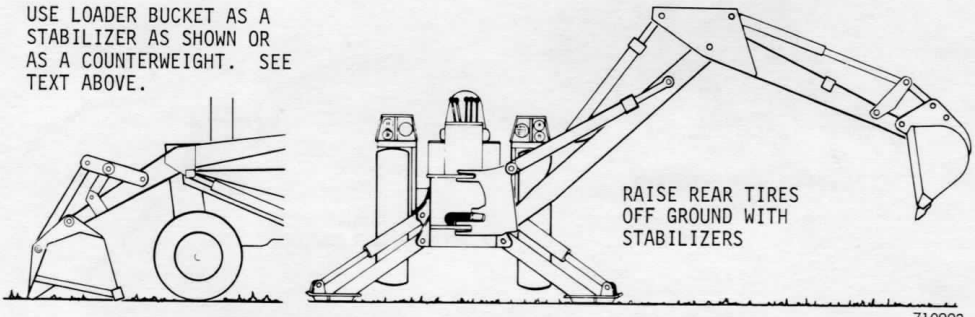

Figure 54 - Machine Ready For Digging

Locating The Machine

If digging a trench, locate the machine so it moves away from the excavation as the trench lengthens. Instructions for repositioning the backhoe are on page 51.

General Operating Tips

Run engine at or near full throttle.

Maximum backhoe efficiency is attained by working at hydraulic pressures just below the main relief valve's pressure setting. If a cylinder fails to move or moves slowly with its control lever in full power position, the pressure setting of the main relief valve has been reached.

The backhoe control valve is designed so that two control levers can be actuated at the same time. Raise boom and extend dipper at the same time. Note that only dipper moves. Repeat operation with dipper lever moved partially into power position (control lever feathered) and boom lever moved completely into power position. Note that both boom and dipper move. Other combined cylinder movements such as bucket and dipper are possible.

It is suggested that a new operator run engine at 1/3 to 1/2 throttle and operate backhoe control levers individually from a feathered position (lever moved slightly into power position) to a full power position and observe that cylinder and resulting backhoe movement. After becoming familiar with individual component motions, combine the motions in a simulated dig cycle several times before putting the backhoe to work.

WARNING: Before swinging the boom, be sure there is ample room and that all persons are out of the way.

Opening The Excavation

Position the backhoe with the boom at approximately a 45° angle and the bucket slightly curled in and touching the ground, Figure 55. Figure 56 illustrates improper backhoe position for ground breaking.

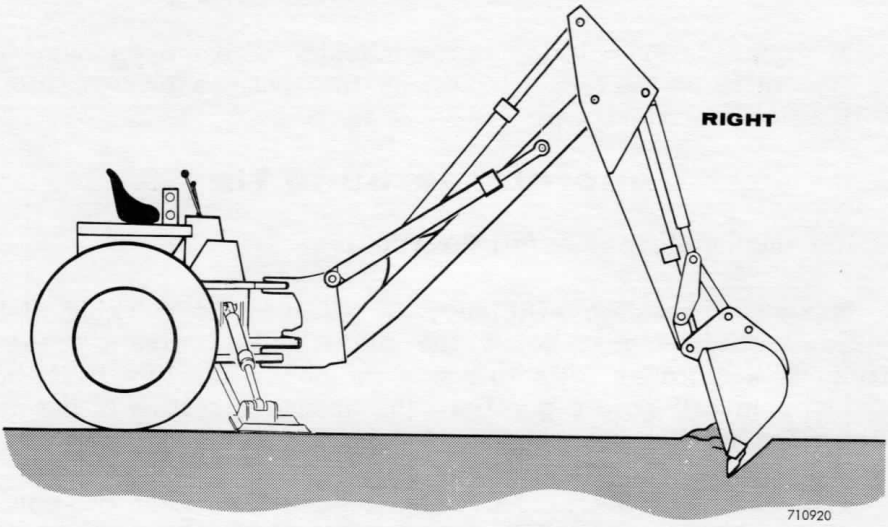

Figure 55 - Backhoe Positioned For Ground Breaking

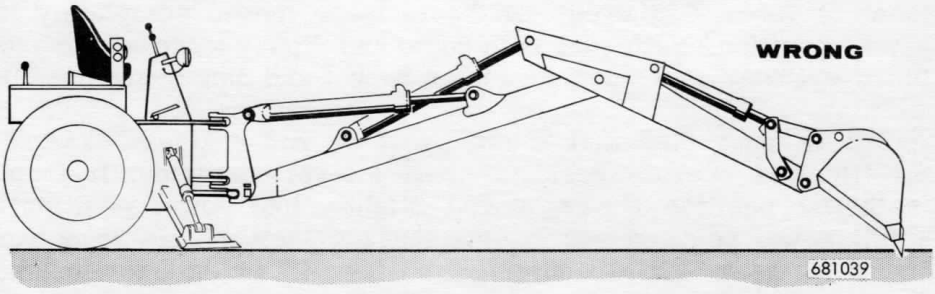

Figure 56 - Backhoe Improperly Positioned For Ground Breaking

NOTE: If your machine is equipped with Hydra-Guide, see Figures 31 and 32.

Actuate the dipper cylinder to start the dig cycle. Approximately half way through the dig cycle start to curl the bucket and continue the cycle with the dipper. If the bucket stalls, raise the boom slightly. At the end of the dig cycle, curl the bucket completely, extend the dipper and swing to the dump site.

As the depth of the excavation increases, the backhoe may be extended to fully utilize its capabilities. How far the backhoe can be extended and used with maximum efficiency depends on the depth of the excavation and the type of soil. Refer to Figure 9.

Filling The Bucket

The problem most often encountered by new operators is the failure to obtain a full bucket. Mastering the technique of "crowding" (pushing) the bucket and filling the bucket requires practice and experience.

The following information is of a general nature and presented to aid you in becoming an efficient operator.

The bucket teeth should be positioned and maintained, as close as possible, parallel to the path the bucket will follow during the digging cycle. This bucket position will allow the lower bucket cutting edge to penetrate (cut) the soil. The depth of the cut is determined by the type of soil.

Use only the dipper and the bucket during the dig cycle. As the dipper pushes the bucket through the soil, curl the bucket to the dipper to maintain the bucket in a good cutting position. If the bucket stalls, raise the boom slightly and complete filling the bucket.

NOTE: Never use the boom in an attempt to crowd the bucket.

When the bucket is full or at the end of the pass, completely curl the bucket, lift the bucket from the excavation and swing to the dump site.

Dump And Return Cycle

Extend the dipper and dump the bucket at the same time. After the bucket is dumped, swing and lower the boom at the same time. When the bucket is over the excavation, stop the swing and lower the bucket. Once again, practice and experience are required to master this cycle.

Repositioning Backhoe When Trenching

It is common practice to reposition the machine using the backhoe power. When the operator elects to use this method, the procedure below must be strictly followed:

1. Be sure the front wheels are pointing straight ahead and the path in front of the machine is clear.

2. Reduce engine speed to approximately 1500 rpm.

3. Raise the boom and pull in the dipper. Reposition the boom and dipper as required to place the backhoe bucket teeth

on the ground at the right or left side of the trench. The machine can then be pushed forward with the boom and dipper.

4. Raise the stabilizers and loader bucket just high enough to clear the ground.

5. Operate the dipper and boom and SLOWLY push the machine to the new position.

6. Reposition the stabilizers for digging and lower the loader bucket to the ground before raising the boom to continue backhoe operation.

Trenching Bucket Position

Trenching buckets are provided with two adjustment positions.

Figure 57 illustrates the bucket in the No. 1 position which permits maximum bucket curl. This position is useful in loading trucks because a larger bucket load can be transported to the truck.

Figure 58 illustrates the bucket in the No. 2 position. In this position, a deeper flat bottom trench can be dug. Also, because bucket curl is reduced, vertical end walls are easily attainable.

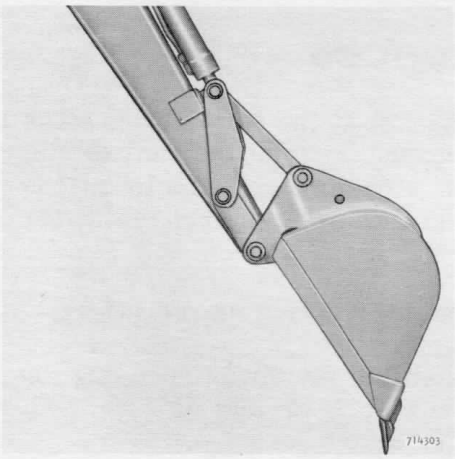

Figure 57 - No. 1 Position

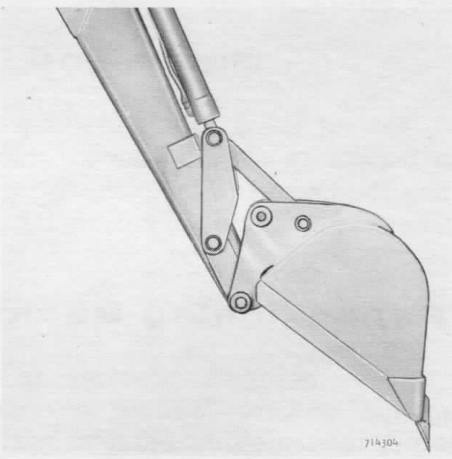

Figure 58 - No. 2 Position

To change bucket position, remove the snap ring and washer from the tapered end of the bucket link pin and remove the pin. Retract or extend the bucket cylinder as required to align the bucket links with the desired hole in bucket. Hold the spacer between the bucket links and drive the pin into place. Reinstall washer and snap ring on bucket link pin.

Digging Basements

The 36 inch trenching bucket is designed for high volume dirt removal. This bucket increases production, as it cuts a full 36 inches wide and has a struck capacity of 8.54 cu. ft.

Figure 59 illustrates the technique used in basement digging. Notice that two corners are left open or free of spoil pile. If the dirt is to be removed, it can be loaded directly into a truck, eliminating an additional loading operation and leaving a clean job site. This method completes the job, leaving a straight vertical wall, an even floor, and no ramp or uncleared area.

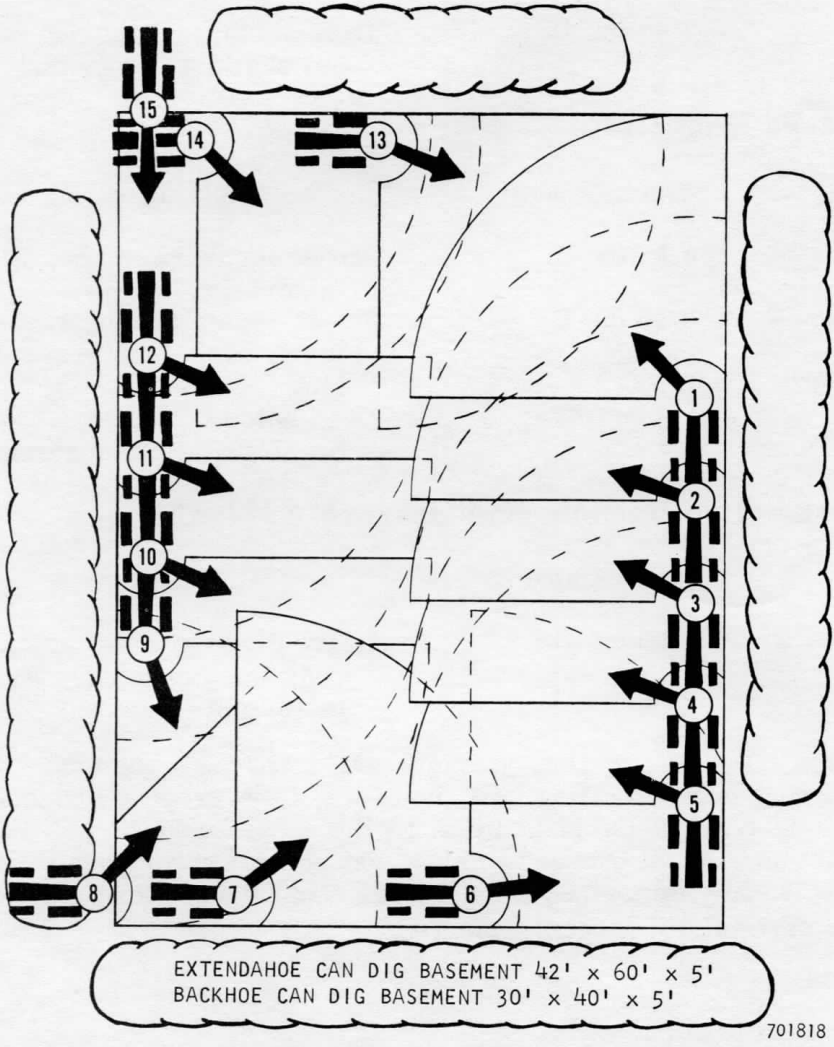

Figure 59 - Backhoe Placement For Digging Basement

Bucket Usage Chart

Trenching Buckets

Size	Struck Capacity	Application
12"	1.74 cu. ft.	Footings, seepage beds, pipe lines
18"	3.18 cu. ft.	Seepage beds, pipe lines
24"	4.64 cu. ft.	General purpose digging, minimum width for deep trench
30"	6.00 cu. ft.	Sewer mains, tank holes, basements
36"	7.44 cu. ft.	Basements, cyclone and fall-out shelters, large tank holes

Bellhole Buckets

Size	Struck Capacity	Application
12"	0.83 cu. ft.	Street repair openings, sticky materials
16"	0.95 cu. ft.	Street repair openings, sticky materials, tough grave digging
30"	1.93 cu. ft.	Deep holes with restricted openings, sticky materials

Combination Bellhole And Graveyard Bucket

Size	Struck Capacity	Application
36"	2.00 cu. ft.	Grave digging, large holes with restricted openings, sticky materials

NOTE: The Heavy Duty Buckets will have the same usage as the trenching buckets. They will, however, take greater abuse under extreme conditions. In addition to the above buckets, a V-ditching bucket and shovel bucket are also available for special applications. Consult your Authorized Case Dealer about the proper bucket(s) for your particular job requirements.

MAINTENANCE/LUBRICATION

This section contains the maintenance information necessary to keep your machine in top operating condition. A closely followed maintenance schedule is the most economical means of assuring many hours of satisfactory operation.

LUBRICATION

Lubricants

Number 2 moly-disulfide grease.

Alternate:

Above 32° F. (0° C.) . . . . . Multipurpose or No. 2 lithium-soap base grease

Below 32° F. (0° C.) . . . . . Multipurpose or No. 1 lithium-soap base grease

Loader Lubrication Points

The loader pivots should be lubricated every 10 hours. If the loader is used in severe or abnormal working conditions, reduce the time interval by one half.

1. Loader frame pivot . . . . . one each side
2. Hydra-Leveling cylinder . . . . . one each end
3. Lift cylinder (early production) . . . . . two each side
   Lift cylinder (late production) . . . . . one each side
4. Tilt cylinder . . . . . one each side
5. Tilt cylinder trunnion . . . . . two each side
6. Bucket link . . . . . two each side
7. Bucket pivot (early production only) . . . . . one each side
8. Clam cylinder (4-In-1 Bucket only) . . . . . two each side
9. Clam pivot (4-In-1 Bucket only) . . . . . one each side

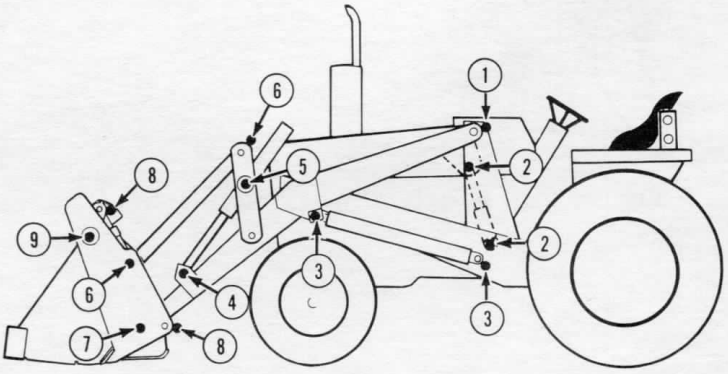

710988

Figure 60 - Loader Lubrication Points

Backhoe Lubrication Points

The backhoe pivot points should be lubricated every 10 hours. If the backhoe is used in severe or abnormal working conditions, reduce the time interval by one half. Remove dirt from grease fittings before applying grease gun.

1. Stabilizer cylinder . . . . . one each side
2. Swing cylinder trunnion (early production) . . . two each side
   Swing cylinder trunnion (late production) . . . one each side
3. Swing cylinder rod eye . . . . . one each side
4. Swing tower pivots . . . . . top and bottom
5. Boom pivots . . . . . one each side
6. Boom cylinder . . . . . two each side
7. Dipper cylinder . . . . . one each end
8. Dipper pivot . . . . . one
9. Bucket cylinder . . . . . one each end
10. Bucket pivot . . . . . one
11. Swing pedal (if so equipped) . . . . . one each side
12. Wear strips (Extendahoe only) . . . See instructions, page 57

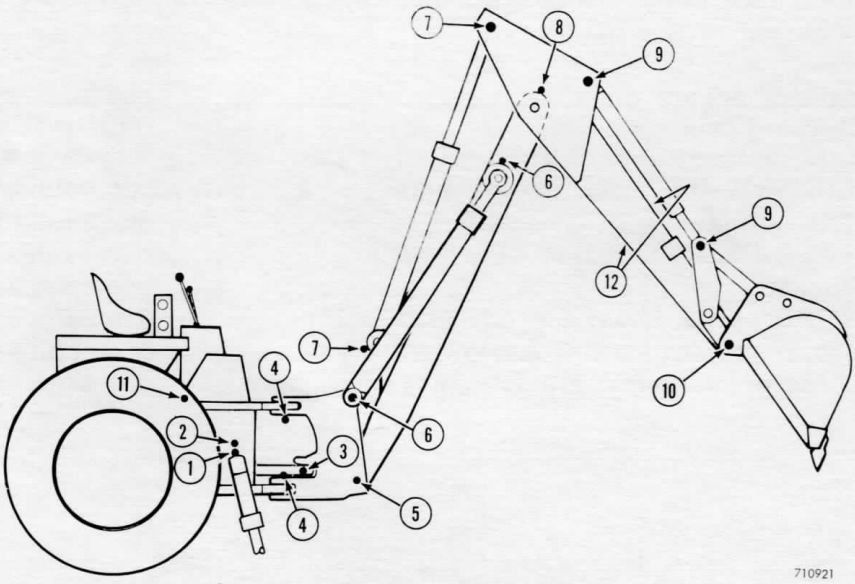

Figure 61 - Backhoe Lubrication Points

Control Lever Lubrication

Each control lever pivot is provided with a grease fitting. The pivots are initially lubricated at the factory. The pivots should rarely require lubrication because of the protection provided by the control tower. Lubricate the lever pivots every six months or every 1000 hours.

On late production backhoes, the grease fittings are easily accessible through the top of the control tower. On early production backhoes, it is necessary to remove the upper front control tower cover and to disconnect hydraulic lines to boom lockout valves, if so equipped.

Extendahoe Wear Strips

Lubricate the wear strips once a month or every 50 hours of operation. Twelve small lube holes are drilled in the dipper, six on top and six on the bottom (Item 12, Figure 61).

Attach the nozzle and grease fitting provided with the Extendahoe to a grease gun. Retract the dipper to its shortest length. Insert fitting into each of the 12 holes and apply one or two strokes of grease.

NOTE: Early production Extendahoes were not equipped with lube holes. To lubricate, fully extend the dipper and coat each wear strip with grease. Retract the dipper extension and remove excess grease.

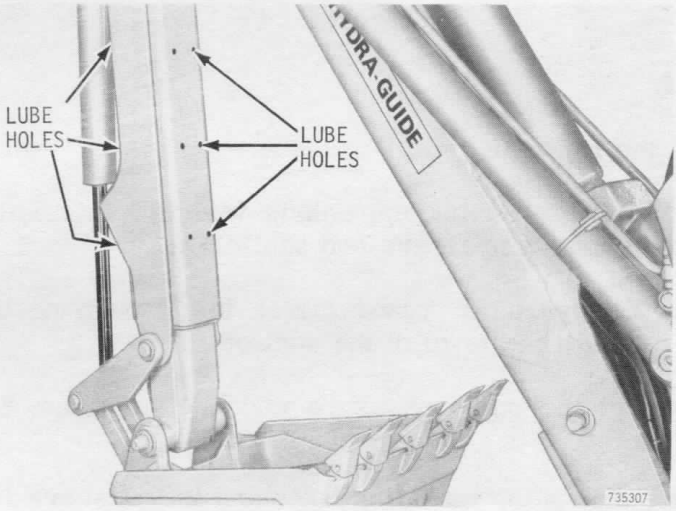

Figure 62 - Lubricating Wear Strips

Equipment Pump Drive Shafts

After every 500 hours of operation, lubricate the splines on the pump drive shaft, the shaft coupling and the stub drive shaft with Molykote, Type G (Case part number D58702, two ounce tube). See Figure 62A.

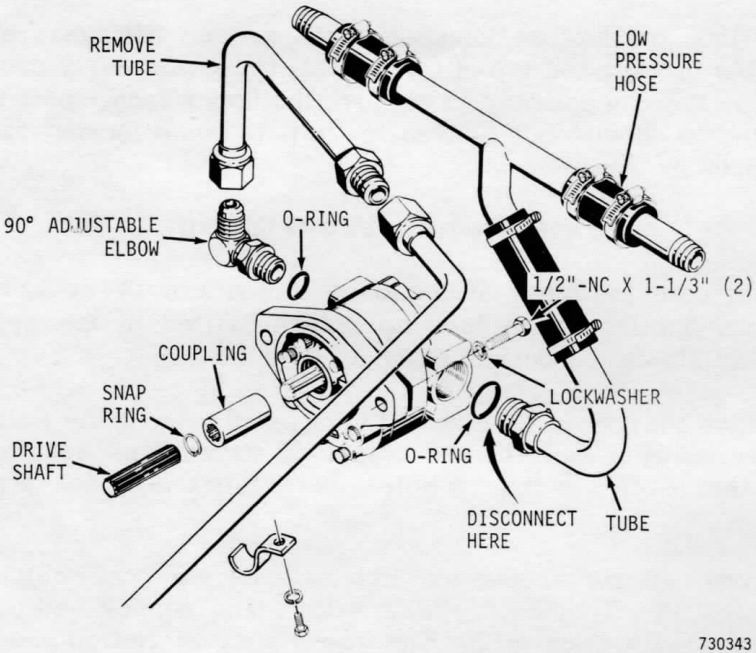

Figure 62A

Removal

1. Remove the radiator grille.

2. Thoroughly clean dirt and debris from the immediate area of the pump and its pressure and suction lines.

3. Drain the hydraulic reservoir(s) low enough so that the oil level is below the level of the suction line.

4. Disconnect the pump pressure and suction lines. See Figure 62A.

5. Remove the pump mounting bolts and lockwashers and remove the pump.

6. Remove shaft coupling from pump drive shaft and stub drive shaft.

7. Remove snap ring from inside of shaft coupling.

8. Thoroughly remove all dirt, debris, rust and excessive oil from the splines on the shafts and coupling. Brush off any loose rust. Clean splines with solvent and dry.

Lubrication

1. Apply the Molykote, Type G, to the entire length of all male splines of the pump drive shaft and the stub drive shaft with a stiff bristle brush. Brush the lubricant into the splines until they are well covered over their entire surface. This is important. Brush parallel to the splines. Wiping a quantity of lubricant over the splines is not acceptable.

2. Do not fill the splines with lubricant. Molykote, Type G, has a peculiar affinity for metal and when properly applied will not wipe off or squeeze out from between metal surfaces. Molykote, Type G, is a concentrate and excessive usage should be avoided.

3. Do not allow dirt and dust to come into contact with the lubricated surfaces during assembly.

Installation

1. Install snap ring in shaft coupling.

2. Install stub shaft in coupling and install this assembly in crankshaft.

3. Engage pump driveshaft with coupling and rotate pump to align mounting holes. Install bolts with lockwashers and torque bolts to 80-85 foot-pounds.

4. Reconnect pressure and suction lines to pump. The suction line must be full of oil before starting the engine.

5. Refill hydraulic reservoir(s) to proper level.

6. Start tractor engine and check hydraulic lines for leaks.

7. If connectors are secure, install radiator.

Three-Point Hitch Lubrication Points

The 3-point hitch pivot points should be lubricated every 10 hours. If the hitch is used in severe or abnormal working conditions, reduce the time interval by one half. Remove dirt from grease fittings before applying grease gun.

1. Lift cylinder . . . . . one each end
2. Lift arm . . . . . one
3. Tilt cylinder rod eye . . . . . one

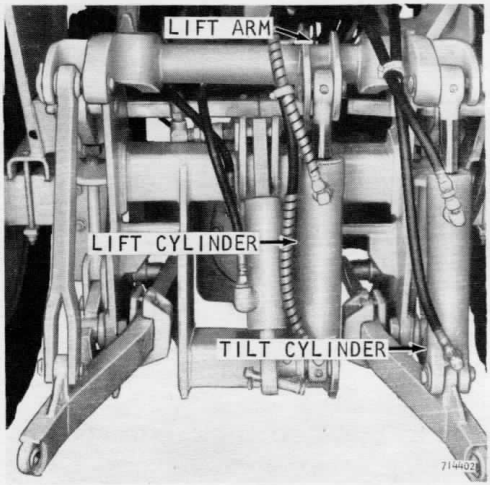

Figure 63 - Three-Point Hitch Lubrication Points

HYDRAULIC SYSTEM

Keeping the hydraulic oil clean and at the proper level are two keys to obtain the maximum service life from the hydraulic system. Continued operation without sufficient oil will result in pump damage, possible hydraulic system component damage and reduced operating efficiency. Dirty oil will result in rapid and unnecessary wear of internal parts of the hydraulic system components. The information to follow will aid you in the proper maintenance of the hydraulic system.

Specifications

Oil change interval . . . . . After first 20 hours and every 500 hours thereafter

Recommended oil . . . . . Case TCH Fluid
Alternate oil . . . . . Engine oil, SD-Service Class D or CA-Commercial Class A (MS or DG)
Expected operating temperature
Above 32° F. (0° C.) SAE 10W
Below 32° F. (0° C.) SAE 5W

Reservoir capacity(approx.)
Loader and loader backhoe . . . . 11 U.S. gallons (42 liters)
Three point hitch only . . . . . 5-1/2 U.S. gallons (21 liters)
System capacity(approx.)
Loader only or
loader with three point hitch . . . . 16 U.S. gallons (60 liters)
Loader backhoe . . . . . 24 U.S. gallons (91 liters)
Three point hitch only . . . . . 7 U.S. gallons (26 liters)

Oil Level Check

The loader subframes serve as the reservoir for the hydraulic system. The oil level plug is located on the left hand subframe upright, Figure 64. Check the oil level after every 50 hours of operation.

NOTE: On three-point hitch only models, the right hand subframe serves as the reservoir.

To check the oil level:

1. Park the machine on a level surface.

2. The oil level should be checked with the oil at operating temperature. If oil is cold, start the engine and completely dump the loader bucket. Hold the control lever in the dump position until the reservoir is warm.

3. Roll the loader bucket back against the bucket stops and lower the bucket to the ground.

4. Place the backhoe in the transport position, if so equipped.

5. Remove the oil level plug. The oil should be even with the bottom of the hole. Add oil as required. Remove the breather from the left hand upright to add oil.

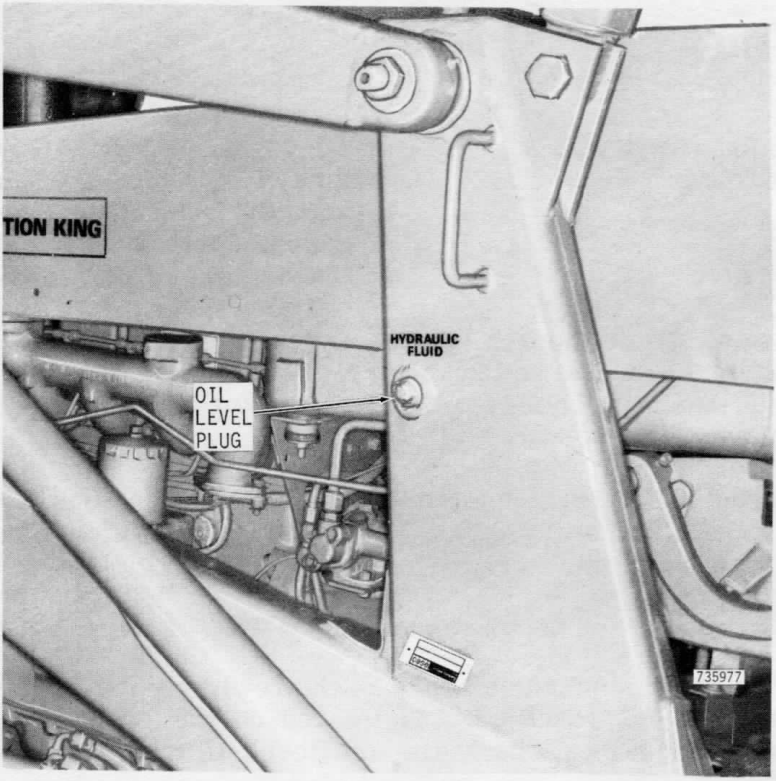

Figure 64 - Hydraulic Oil Level Plug

Hydraulic Oil Filter

The hydraulic oil filter is located directly below the filter condition gauge, Figure 65. The filter is above the reservoir oil level, so it is not necessary to drain the reservoir when replacing the filter element.

NOTE: Figure 66 shows an early production oil filter. On late production models, the filter has been turned over so that the hex is on the bottom.

The filter element should be replaced after the first 20 hours of operation. After the filter is changed at 20 hours, the filter element must be replaced whenever the needle on the filter condition guage, Figure 65, enters the red zone and at 500 hours when the hydraulic oil is changed.

The filter condition gauge needle will enter the red zone because, (1) the filter element is plugged, or (2) the hydraulic oil is cold. Therefore, to determine the condition of the filter element the oil should be at operating temperature and the engine running at full throttle.

Figure 65 - Filter Condition Gauge

Filter Replacement

1. Unscrew filter housing from filter head (on late production models, the filter assembly is installed with the head on top).

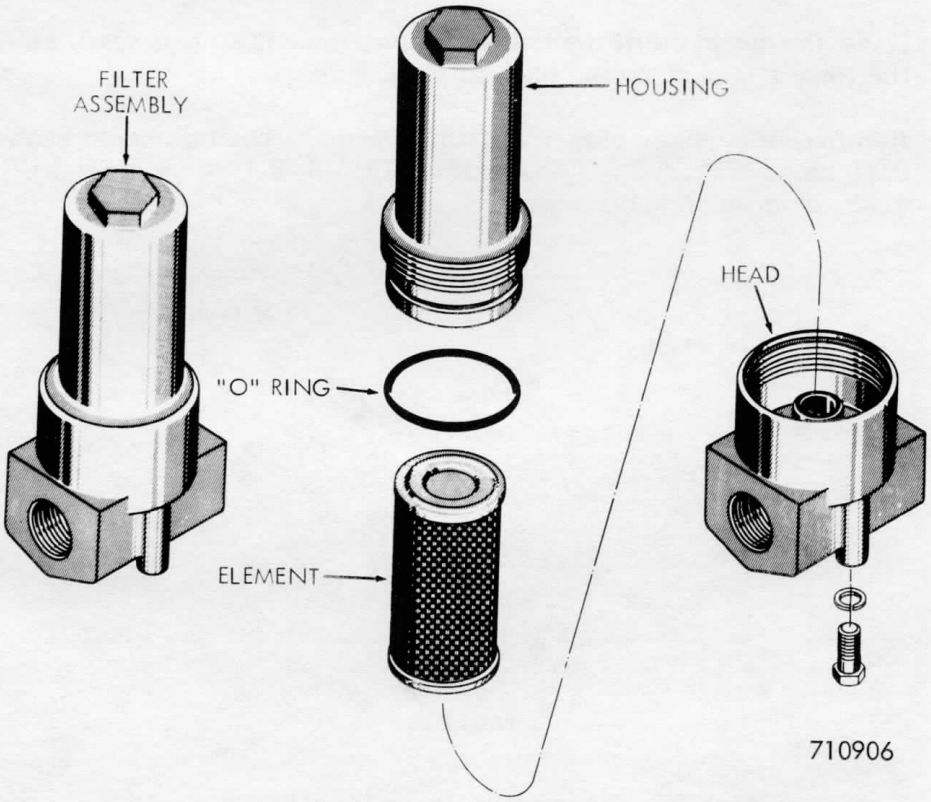

Figure 66 - Exploded View of Oil Filter

2. Remove filter element and discard. Then remove the O-ring from the filter housing and discard.

3. Clean the filter housing and head with a lint free cloth.

4. Place filter element on filter head and install a new O-ring on the filter housing.

5. Lubricate filter housing threads and O-ring with hydraulic oil and screw the housing into the filter head and tighten. Do not exceed 90 foot-pounds torque.

Hydraulic Oil Change

The reservoir should be drained after the first 20 hours of operation and every 500 hours thereafter. Refill with Case TCH Fluid. Clean the reservoir breathers whenever the reservoir is drained. It is recommended that the hydraulic oil be at or near operating temperature when drained.

1. Park the machine on a level surface.

2. Have the backhoe in the transport position, if so equipped, and the loader bucket rolled back at ground level.

3. Remove the drain plug from the elbow at the bottom of each subframe, Figure 67. Approximately 5-1/2 U.S. gallons will drain from each subframe.

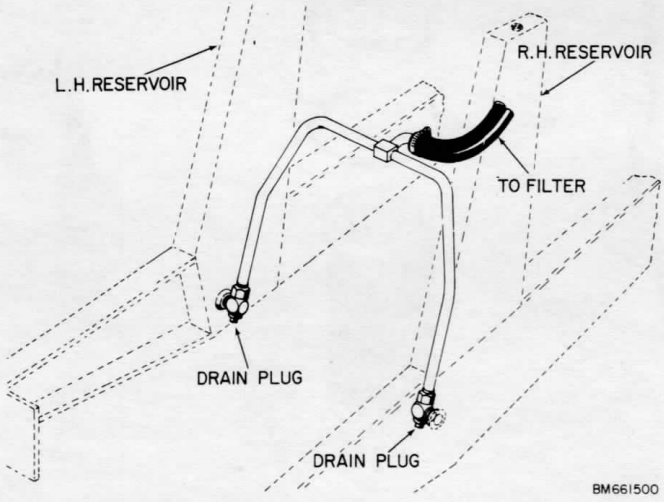

Figure 67 - Reservoir Drain Plug Location

4. Remove the reservoir breathers and clean as instructed on page 66.

5. Replace the hydraulic oil filter as instructed on page 62.

6. Reinstall the drain plugs.

NOTE: Due to production changes, the breathers and plugs may be located on the opposite side from the side shown.

7. Remove the vent plug from the front of the subframe, Figure 68.

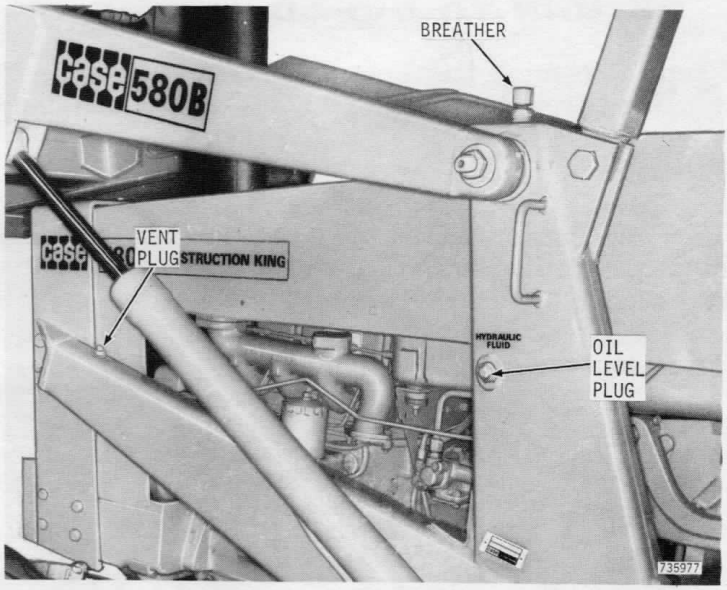

Figure 68 - Reservoir Breather, Level and Vent Plugs

8. Fill the reservoir through the large breather opening until oil appears at the vent plug opening, then reinstall the plug.

9. Remove the oil level plug and continue filling until oil is level with the plug opening.

10. Reinstall the reservoir breathers and the oil level plug.

11. Start the engine and operate the loader and backhoe through several complete cycles to bleed any air from the hydraulic system.

12. Check oil level and add as required.

Reservoir Breathers

The reservoir breathers must be cleaned when the hydraulic oil is changed. Clean the breathers more often if operating in extremely dusty conditions.

To clean the breathers, agitate the breather assemblies in cleaning solvent. If the breathers were contaminated with oil, wash the breathers again using fresh solvent. Dry the breather element with moisture free compressed air (30 psi maximum) by blowing through the breather stem opening.

RETURN-TO-DIG ADJUSTMENT

The return-to-dig linkage is initially set to position the bucket level with the ground and should rarely require adjustment.

If adjustment is required:

1. Position the bucket flat on the floor (ground). Hold the control lever in the rollback position and make sure the anti-rollback crank, Figure 69, is not touching the control valve mounting plate. If the crank contacts the plate, shorten the linkage between the crank and the control lever.

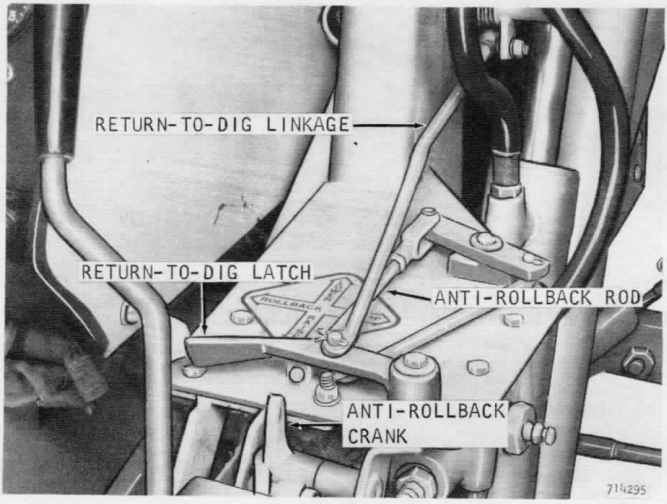

Figure 69 - Return-To-Dig and Anti-Rollback Linkage

2. Position the control lever in the return-to-dig position (left and forward). Loosen the set screw in the collar, Figure 70, and slide the pipe and collar slowly to the rear until the control lever is released. Then tighten the collar set screw.

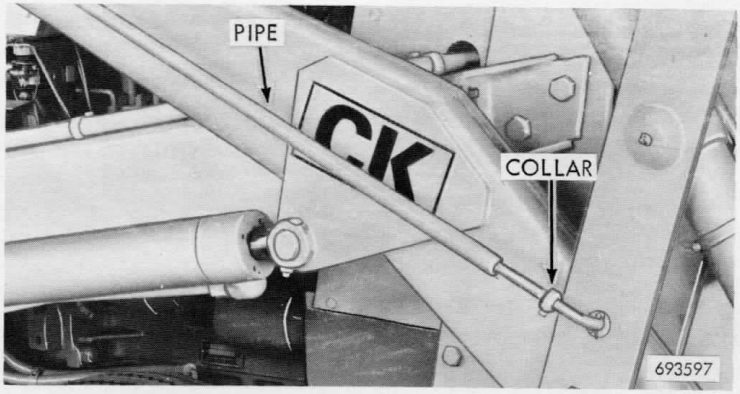

Figure 70 - Return-To-Dig Adjustment

3. To check the adjustment, raise the bucket to full height and completely dump the bucket. Place the control lever in the return-to-dig position. When the bucket touches the floor it should be in the desired position.

ANTI-ROLLBACK ADJUSTMENT

The anti-rollback linkage prevents the bucket from rolling back too far and dumping part of the load on the machine or operator.

WARNING: DO NOT deviate from this adjustment procedure.

1. Make sure the return-to-dig operation positions the bucket flat on the floor (ground). Adjust return-to-dig as required.

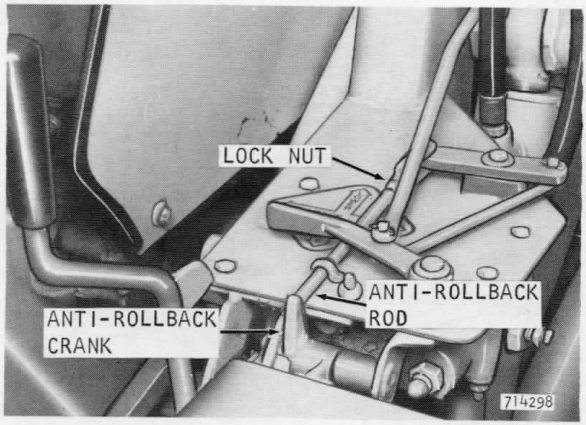

Figure 71 - Anti-Rollback Adjustment

2. Roll the bucket back against the bucket stops on the lift arms and lower the bucket to the floor.

3. Lengthen the anti-rollback rod until it contacts the anti-rollback crank and tighten the lock nut. Refer to Figure 71.

BUCKET TEETH

The same bucket teeth are used by the loader and backhoe buckets with the exception of the heavy duty backhoe bucket.

PEENED TYPE REPLACEMENT: Use a suitable tool and raise peened portion on each side of tooth, Figure 71, and remove tooth from shank. The peened area may be heated with an acetelyne torch to aid removal. Slide new tooth onto shank as far as it will go and peen each side into depression in shank.

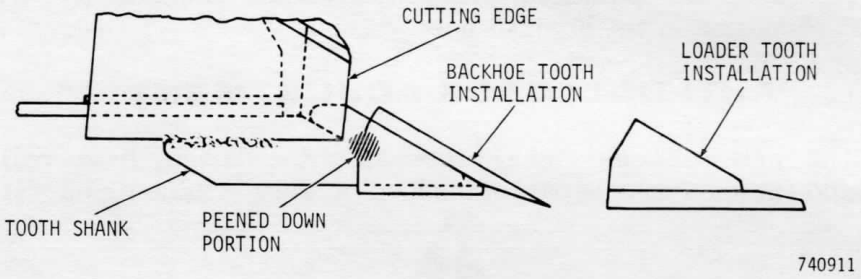

Figure 71

FLEX PIN TYPE REPLACEMENT: Heavy duty backhoe buckets use teeth that are flex pin retained. To remove or install flex pins, drive pin with a hammer and oval shaped punch that contacts both halves of the pin to prevent shearing off the rubber insert. Figure 72.

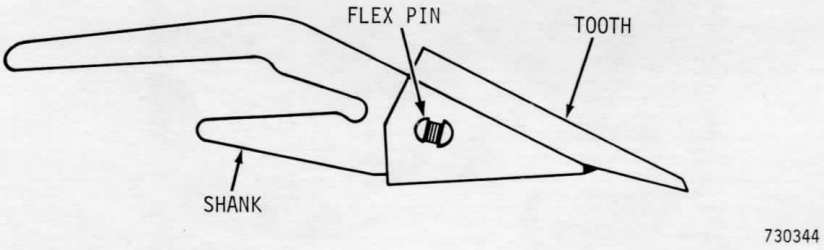

Figure 72

EXTRA EQUIPMENT

Many options are available that will enable your Case machine to perform more jobs and give you added personal comfort and safety. All items can be purchased from your Authorized Case Dealer.

Buckets

A wide variety of loader and backhoe buckets are available. Your Authorized Case Dealer will help you select the buckets you need.

Front Attachments

Dozer blade
Pallet forks
Logging fork and grapple
500 pound counterweight
700 pound counterweight

Rear Attachments

4' Extendahoe
Three-point hitch
Triumph mowers
Case/Danuser attachments
1400 pound counterweight
Model 20 drop hammer
Hughes impactor tools
PTO
Swinging drawbar

Operating Aids

Backhoe frost point
Loader bucket teeth
Ether starting aid
Cemetery stabilizer pads
Rubber stabilizer pads
Boom lockout system
Rear wheel weights
Hydra-Guide hydraulic system
Dual lever backhoe controls
Arm rests for std. seat

Lights

Stop, turn, and floodlights
Dipper light
Rotating beacon

Safety And Security

Slow moving vehicle emblem
Backup alarm
Horn
Fire extinguisher
Lockup kit
ROPS with seat belts

Tires

A variety of optional tires are available to suit various requirements. See your Authorized Case Dealer.

INDEX

A

Anti-Rollback 67

B

Backhoe Installation 38
Backhoe Lubrication 56
Backhoe Removal 36
Backhoe Specifications 10
Backhoe Transport 34
Boom Lockout 31
Bucket Adjustment, Backhoe 52
Bucket Position Indicator 18
Buckets, Specifications 13
Bucket Teeth 66
Bucket Usage, Backhoe 51,54

C

Cab 32
Controls, Backhoe 21-24
Controls, Boom Lockout 31
Controls, Clam 18
Controls, Extendahoe 24,29
Controls, 4-In-1 Bucket 18,19
Controls, Loader 15
Controls, Lubrication 57
Controls, Three-Point Hitch 20
Counterweight 42

D

Digging Basements 53
Digging Profile, Backhoe 11
Digging With Backhoe 49-54
Digging With Loader 43-47
Drive Shafts, Hydraulic Pump 58
Dumping Loader Bucket 45

E

Engine Speed While Operating 44,49
Extendahoe Controls 24,30
Extendahoe Lubrication 57
Extendahoe Specifications 10

F

Filling Bucket, Backhoe 51
Filling Bucket, Loader 44
Filter ..... See Hydraulic Oil Filter
Filter Condition Gauge 62
Float, Use of 16
Four Foot Extendahoe ..... See Extendahoe
4-In-1 Bucket 18,46

H

Hydra-Guide 26-28
Hydraulic Oil Change 64
Hydraulic Oil Filter 62
Hydraulic Oil Level Check 61
Hydraulic Oil Specifications 61
Hydraulic System Maintenance 60-66
Hydraulic System Specifications 12,61

L

Lift Cylinder Stops 4
Loader Controls . . . . . See Controls, Loader
Loader Lubrication 55
Loader Operation 43-47
Loader Specifications 8,9
Loading Trucks 45
Lubrication 55-60

M

Maintenance 55-68
Maintenance Safety Rules 4

O

Oil . . . . . See Hydraulic Oil
Operation, Backhoe 48-53
Operation, Loader 43-47
Operation, Safety Rules 2
Operator's Seat 14
Optional Equipment 69

Q

Quick Disconnect Couplings 37

R

Reservoir Breather 65,66
Return-To-Dig 16,43
Return-To-Dig Adjustment 66
ROPS (Rollover Protective Structure) 32

S

Safety Rules 2-4
Seat 14
Seat Belts 32
Selector Valve, Hydra-Guide 26
Serial Number Location 7
Specifications 8-13
Stabilizers, Positioning 25,48

T

Three-Point Hitch Installation 41
Three-Point Hitch Lubrication 60
Three-Point Hitch Removal 39
Transport, Backhoe 34
Transporting Loads 43
Truck Loading 43-46

W

Weights 13