780 Construction King

98 hp Case diesel engine

120 hp Case turbocharged diesel engine, optional

21,000 lbs of weight

Full powershift transmission and torque converter drive

18' twin cylinder backhoe with dual-pump hydraulics

6400 lbs capacity

Hydraulic self-leveling loader

3961 First P[illegible] Nov. 75—101-I

Features

Basic Tractor — Case-built open chamber direct injection diesel engine. Fast responsive power, plus record breaking fuel economy. Famed for long life and dependability.

2-speed forward and reverse, full powershift transmission. Shift, travel forward and reverse simply by moving one hand lever near the steering wheel. Eliminates clutching. Adds speed, ease and convenience to 780 operation.

Torque converter instantly and automatically adjusts speed and power to load requirements. No stalling. Less tire slippage. No clutch wear. More production.

Full-time hydrostatic power steering lets the operator maneuver with ease. Saves time and effort. Ideal for close quarter work.

Adjustable, bucket-type, turn-around seat for loader and backhoe operation.

Heavy-duty outboard planetary rear axle with torque-proportioning differential for easy maneuvering in soft, muddy terrain.

Massive front axle with heavy-duty spindles and bearings for exceptionally high load carrying ability.

Backhoe—18' Case-built backhoe reaches over 22' from swing pivot, loads to height of 11'5", generates over 15,500 lbs of bucket digging force. Two 4½" diameter boom cylinders and one 6" diameter crowd cylinder provide production boosting crowd-dig power.

58 gpm dual-pump hydraulic circuit powers bucket, boom and crowd while digging and lifting. It then automatically splits to operate swing on one circuit (23 gpm), boom, crowd and bucket on the other circuit (35 gpm). Gives the 780 backhoe greater speed, more capacity and productivity.

Alloy steel, box section design boom. Ten times the torsional strength of open backhoe booms. Resists the twists of day-in, day-out production backhoe work. Less maintenance.

Fast, accurate 180° foot operated swing. Hand operated boom, crowd and bucket controls. Hydraulic cushioning protects unit on full swings.

Exclusive over center backhoe design shortens transport length while transferring additional weight to the front axle to increase stability when roading. Automatic over center latch locks boom in transport position.

A wide range of backhoe trenching buckets. Exceptionally rugged in design. Ideally matched to big production excavating jobs.

Loader—Hydraulic self-leveling loader design automatically keeps the bucket level from ground to full lift. Eliminates load spillage. Fewer parts to wear, less maintenance.

Power linkage mounting of cylinders provides exceptional breakout force, bucket rollback and grading angle. While grading or dozing, bucket cylinders are fully retracted to eliminate rod deflection.

Single lever controls all loader functions—bucket rollback, lift, dump, return-to-dig. Simplifies operation, speeds cycling.

Return-to-dig returns the bucket to its proper digging position after the load is dumped. Frees the operator so he can concentrate on maneuvering.

Unitized loader—main frame—prime mover design. Built specifically for high production loading and long life.

1¾ cu/yd conventional loader bucket. Also 1½ cu/yd 4-in-1® bucket.

Unit shown is equipped with optional items. Manufactured by J I Case Company, Racine Wisconsin USA.

J I Case
A Tenneco Company

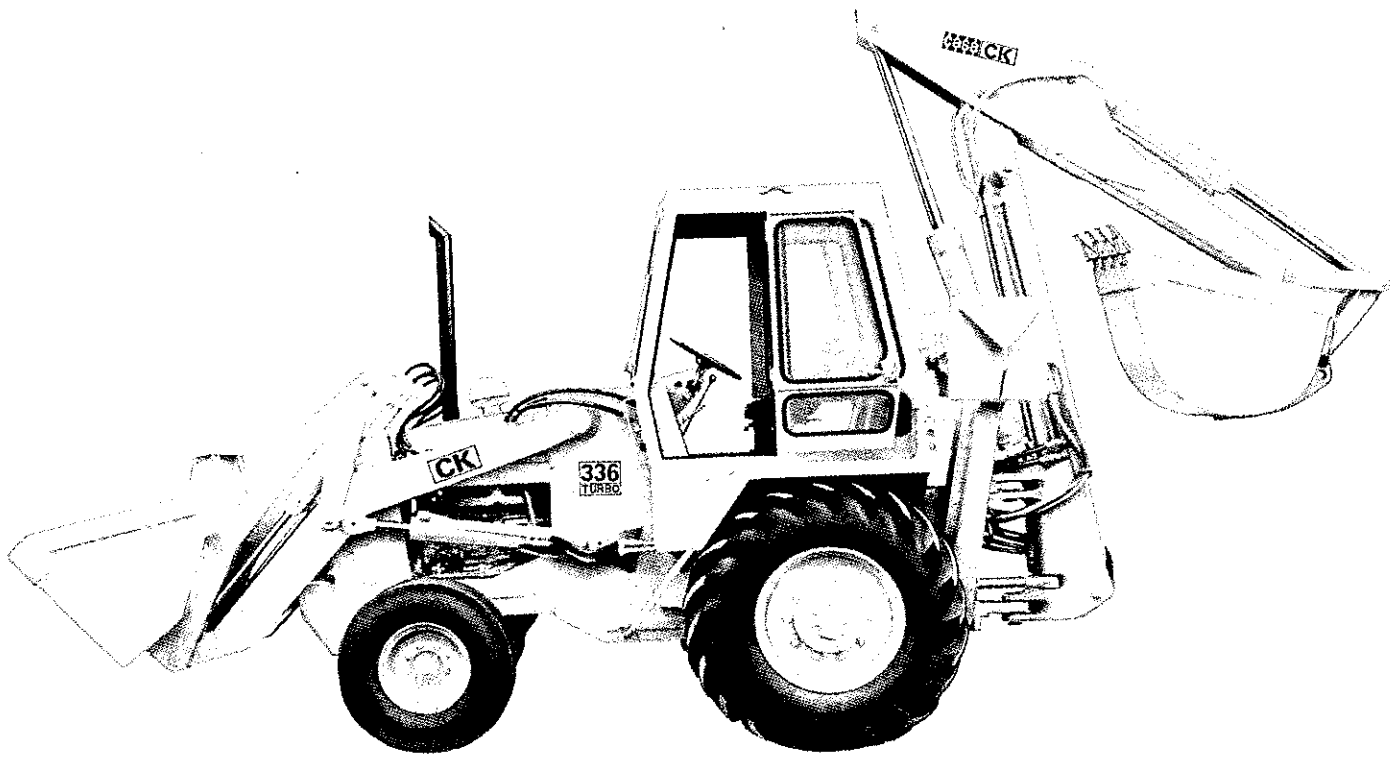

Specifications
780
Construction King

Engine

Make and model	Case A336
Type of fuel	diesel, No. 2
Number of cylinders (valve-in-head)	4
Bore and stroke	4⅝" × 5"
Displacement (cu/in)	336
Electrical system	24 v
Batteries (number and capacity)	(2) 12 v, 95 amp/hr
Compression ratio	16.5 to 1
Fuel induction	open chamber, direct injection
Fuel supply	injection pump
Air cleaner	dry-type
Oil filter, full-flow type	renewable, spin-on cartridge
Lubrication	positive pressure
Cooling system—type	pressurized, 7 psi
—pump	impeller

Horsepower	Natural Aspirated	Turbocharged
(1) Mfg. rated	98 @ 2200 rpm	120 @ 2200 rpm
(2) SAE net	89 @ 2200 rpm	108 @ 2200 rpm
Maximum torque— lbs/ft		
(1) Mfg. rated	269 @ 1600 rpm	329 @ 1500 rpm
(2) SAE rated	253 @ 1600 rpm	305 @ 1500 rpm
Torque at governed rpm— lbs/ft		
(1) Mfg. rated	232 @ 2200 rpm	285 @ 2000 rpm
(2) SAE rated	211 @ 2200 rpm	255 @ 2000 rpm

(1) Manufacturer's rating of maximum horsepower or torque at flywheel when equipped with oil and water pumps. Fuel set at maximum quantity for this application. Corrected to sea level 29.92" (760 mm) Hg and 60° F. (16° C) dry air.

(2) SAE net flywheel horsepower or torque of engine as applied to this vehicle when equipped with operating accessories including oil and water pumps, alternator, air cleaner, fan and muffler. Corrected to 500' (152,4m) altitude with .38" (10mm) Hg vapor pressure 29.38" (746 mm) Hg observed barometer and 85° F (29° C) per SAE J816a specifications.

CASE MODEL A336/A366BDT OPEN CHAMBER DIESEL TORQUE PERFORMANCE

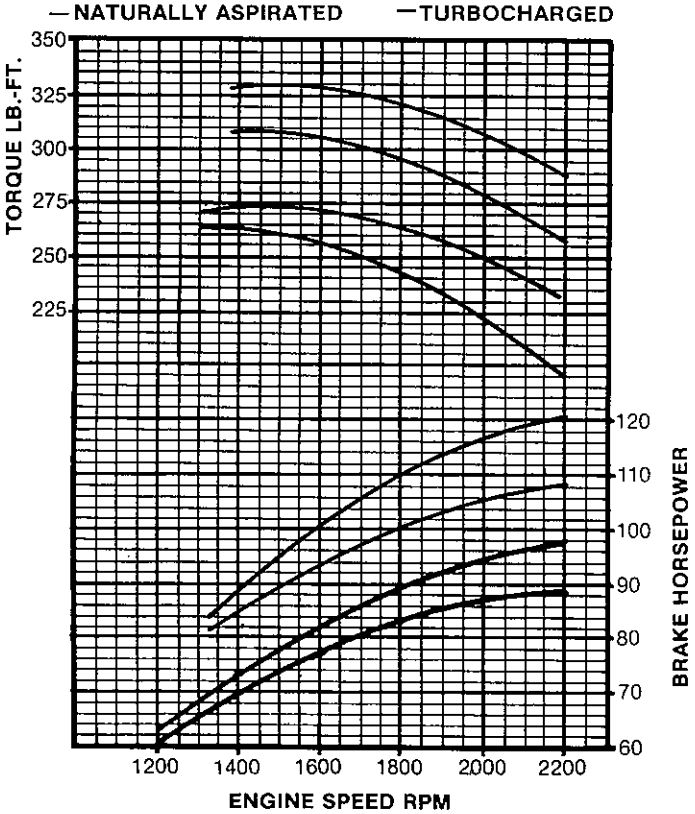

Engine Features

Direct injection, open chamber design with special spiral intake passages to assure big capacity, free air flow and a thoroughly mixing swirl as fuel enters combustion chamber. Promotes instant, clean, complete combustion. Cuts fuel consumption.

Extra heavy, rigid block supports bearings and crankshaft. Multiple cylinder heads avoid warpage, assure optimum temperature control for cooler operation, easier servicing.

Replaceable, wet-type sleeves with alloy pistons and rotating exhaust valves lengthen engine life, simplify repairs.

Dynamically counterbalanced crankshaft absorbs stresses, keeps engine running smooth. Big bore, long stroke design permits moderate rpm operation for reduced wear, longer life.

Power Train

Transmission: 2-speed full powershift with torque converter

Torque converter: single stage, hydrokinetic type (3.095 to 1 ratio)

Reversing unit: full power, hydraulic clutch

Rear axle: outboard planetaries with torque proportioning differential

Brakes: individual or simultaneous, foot-activated, air over hydraulic 17" × 4" drum type brakes. Brakes can be operated with or without interrupting power flow to rear wheels by clutch cut-off control located on dash. Over center type parking brake with drum on transmission output shaft.

Capacities

Cooling system	26 qts
Fuel tank	35 gals
Engine lubricating oil (without filter change)	10 qts
Transmission (with filter change)	11 qts
Rear axle	pinion — 16 pts; planetaries — 5 pts each

Tractor Operational Data

Travel speeds (mph)
with 18.4 x 24 tires @ governed engine speed

	Low	High
Forward	5.2	19.5
Reverse	5.2	19.5

Front Axle Load Rating

Dynamic	68,000 lbs
Static	17,000 lbs

Steering

Power steering (standard)	hydrostatic
Turning ratio (stop to stop)	2½ turns

Tires

Standard:	
Front	truck tread, 9.00 × 20, 10 PR
Rear	18.4 × 24, 12 PR, R4
Optional:	
Front	truck tread, 14.00 x 17.5, 10PR
Rear	18.4 x 28, 12 PR, R4
	21L x 24, 12 PR, R4

Dimensions

	Regular Bucket	4-in-1 Bucket
Transport height	13'3"	
Overall length—backhoe in transport position, bucket flat on ground	24'7"	24'11"
Overall width— at stabilizer (in travel position)	95"	
at loader bucket	95"	96"
at rear wheels	93"	
Wheelbase	80"	
Tread width—front	78"	
—rear	74½"	
Overall height (to top of steering wheel)	86"	
Ground clearance—bottom rear axle	15½"	
Approximate weights		
Shipping weight—no ballast (Includes 1¾ cu/yd loader and 24" backhoe buckets)	21,000 lbs	21,500 lbs

Loader

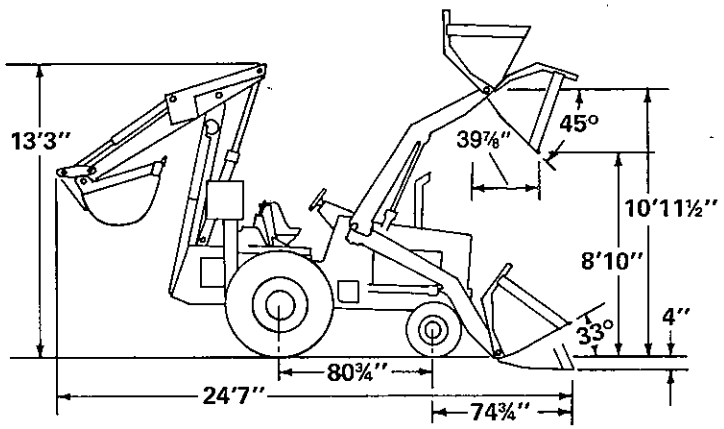

Loader Operating Data

Lift capacity to full height	6400 lbs
Breakout force, maximum	16,000 lbs
Height to bucket hinge pin	10'11½"
Dump reach at full height and 45° dump angle	39⅞"
Dump clearance at full height	8'10"
Reach, bucket on ground	74¾"
Bucket rollback at ground level	33°
Grading angle	75°
Max. dump angle at full height	52°
Digging depth below ground line, bucket level	4"
Turning clearance circle dia. — with brakes	32'4"
— without brakes	40'5"
Raising time to full height	7.2 sec
Dumping time	2.4 sec
Lowering time (power down)	5.1 sec

Loader Features

Unique, patented, force multiplying linkage gives the 780 superior productive capability. It rolls the bucket back at ground level to let the operator get and retain a full load. Fast dump saves time, adds extra loading cycles every hour. Linkage design also provides maximum angle for grading and leveling. While grading or leveling, rods are fully retracted to eliminate rod deflection and seal damage — lower maintenance cost.

Hydraulic self-leveling design assures maximum production per cycle. It eliminates load spillage by automatically keeping the bucket level from ground line to full lift height. There is no complicated mechanical linkage. Fewer parts to wear, less maintenance.

Return-to-dig significantly reduces loader cycle time by freeing the operator to concentrate on maneuvering. He simply moves the single lever control into proper position and the bucket automatically returns to its proper dig position after dumping. Available only with Case.

Choice of conventional-type or 4-in-1 bucket. 4-in-1 bucket adds greatly to loader job potential. Loads conventionally or bottom dumps for extra clearance. It can effectively grasp and lift pipe, boulders, poles, etc. Hinge-type jaw opens exceptionally wide to permit handling objects wider than the width of the bucket. 4-in-1 bucket can also be used to doze, or it will function as a scraper on leveling operations.

Loader Buckets

Types	Capacities		Width	Weights
	SAE Rating (Nominal Heaped)	Struck		
Case	1¾ cu/yd	1½ cu/yd	95"	1300 lbs
4-in-1	1½ cu/yd	1¼ cu/yd	96"	2040 lbs

4-in-1 Bucket Operating Data

Lift capacity to full height	5400 lbs
Breakout force, maximum	16,000 lbs
Height to bucket hinge pin	10'11½"
Dump clearance at full height	8'10"
Dump clearance at full height using clam	11'10½"
Reach, bucket on ground	79"
Bucket rollback at ground level	46°
Grading angle	100°
Maximum dump angle at full height	42°
Digging depth below ground line (bucket flat)	7"
Raising time to full height	6.7 sec
Dumping time	2.4 sec
Lowering time (power down)	5.1 sec
Width of dozer cutting edge	93"
Maximum clam opening	46"
Dozing depth	5¾"
Digging depth using clam	44½"
Moldboard height	40¼"

Standard Equipment

55 amp alternator, anti-freeze solution to -20°F, Air over hydraulic drum type service brakes. Moisture ejection valve for air brakes. Parking brake, 24 volt electrical system with circuit breaker, Dry type air cleaner with service indicator, Electric fuel pump, Case 336 cu/in A336 diesel engine, Engine oil & fuel filters, Suction type fan, Rear wheel fenders, 35 gallon fuel tank, Hand and foot throttles, Full time hydrostatic steering, Heavy duty front axle with 78⅝" tread, Self-leveling loader (less bucket), Lights, 2 headlights, 2 rear stop and tail lights, Planetary rear axle with torque proportioning differential, Wide accessible platform, Manifold preheater, Return-to-dig single lever loader control, Adjustable bucket type seat turns around for backhoe operation, Full powershift two-speed transmission, Torque converter, Tool box, 18' backhoe with foot swing control and cleated stabilizer pads, 9.00 x 20, 10PR truck, tube-type front tires, 18.4 x 24, 12PR R4 tread. Instrument panel includes: Air pressure gauge, Hourmeter, Tachometer, Key switch, Push button starter switch, Dash lights, Voltmeter, Converter oil temperature gauge, Fuel level gauge, Transmission clutch pressure gauge, Engine oil pressure gauge, Engine water temperature gauge.

Optional Equipment

Case 336 cu/in A336BDT turbocharged diesel engine. Anti-freeze to -40°F in lieu of -20°F, Pusher fan in lieu of suction fan, Engine side panels (Set of 2), Turn signals, Ether starting aid kit, Lockup kit, Backup alarm, Rotating beacon, Air-horn, Moisture ejection valve for air brakes, Tire inflation kit, Power assist for backhoe hydraulic valve, Cab heater & defroster, Backhoe dipper light, 1¾, 1½ cu. yd. 4-in-1 bucket, 19", 24", 30", 36" and 42" backhoe trenching buckets, Frost point (ripper tooth), 14.00 x 17.5, 10PR and 21L x 24PR, R4 and 18.4 x 28, 12PR R4 Rear tires, Loader bucket teeth, ROPS cab, Canopy, Seat belt, Rubber stabilizer pads, 2 rear mounted working lights with 4-way flasher.

3961 First P[illegible] Nov. 75—103-I

18' Backhoe

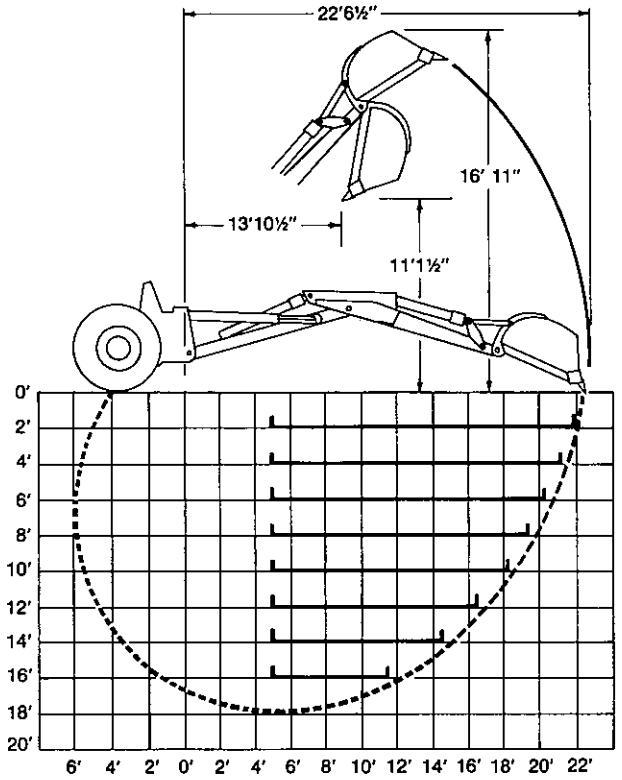

- - - DIGGING PROFILE
TRENCHING BUCKET

Backhoe Operational Data

Digging depth — IEMC rated	18'0"
Maximum digging depth (with teeth)	18'4"
Swing arc	180°
Clearance height	11'5"
Digging radius (from swing pivot)	22'6½"
Reach (from center line of rear axle)	26'4"
Bucket rotation	155°
Loading height	11'1½"
Loading reach at full height	13'10½"
Stabilizer spread — operating position	13'1½"
— travel position	7'11½"
Maximum grade on which backhoe will make vertical cut	12°
Digging force, bucket cylinder	15,500 lbs
Digging force, dipper cylinder	11,800 lbs

Dual Hydraulic System Operation

The 780 loader/backhoe hydraulic system is truly unique. Here is positive, no-lag response and maximum operating speed to assure top production output. The system has two hydraulic circuits. One is powered by a 23 gpm pump, the other by a 35 gpm pump. These pumps are tandem mounted, producing a combined flow of 58 gpm. In loader operation, the 35 gpm pump gives power for maximum breakout, simultaneous roll-back and lift, and big lift power. For backhoe operation, the combined pumps operate bucket, boom and crowd to give the 780 maximum available speed when it's needed most — during the dig-lift cycle. At the end of the dig-lift cycle, the system automatically splits. The 23 gpm pump operates swing for greatest speed, while the 35 gpm pump controls boom, crowd and bucket action.

Pump capacity: 23 gpm and 35 gpm tandem pumps for combined flow of 58 gpm @ 2200 rpm @ 2000 psi with Case Hi-Lo TCH oil.

Pump type: tandem, direct drive, positive displacement, gear type, mounted rear of transmission.

System relief pressure setting: Loader — 2150 ± 50 psi @ 35 gpm
Backhoe — 2050 ± 50 psi @ 58 gpm

Filtration: 25 micron, full-flow replaceable cartridge on return line. Condition gauge for filter.

System capacity: 57 gals., 25 gals refill.

Cylinder design and packing: easy-to-service with threaded end cap. Hardened and chrome-plated rods. Cylinder equipped with two-way, triple-seal packing and metal guide rings for positive action. Nylon wiper rings and self-locking cap screw on rod with "U" cup packing. Cylinders have micro-smooth bore for long packing life.

Loader cylinders:

Lift (2)	D.A. 4½" dia. × 30" stroke, 2¼" rod
Bucket (2)	D.A. 3½" dia. × 28¾" stroke, 1¾" rod
Clam (4-in-1 only) (2)	D.A. 3½" dia. × 9 1/16" stroke, 1½" rod

Control valve: single-lever control, two-spool valve, positive hold "float" position and raise position in lift circuit. Extra lever and spool for 4-in-1 models. Automatic return-to-dig mechanism is standard.

Backhoe cylinders:

Boom (2)	D.A. 4½" dia. × 53¼" stroke, 2½" rod
Crowd (1)	D.A. 6" dia. × 43⅝" stroke, 3" rod
Bucket (1)	D.A. 5" dia. × 37½" stroke, 3" rod
Swing (2)	D.A. 4½" dia. × 14½" stroke, 2¼" rod
Stabilizer (2)	D.A. 4½" dia. × 28" stroke, 2½" rod

Control valve: heavy-duty, six-spool, sectional valve with open center parallel circuit. Pedal swing controls. Hydraulic cushioned stops.

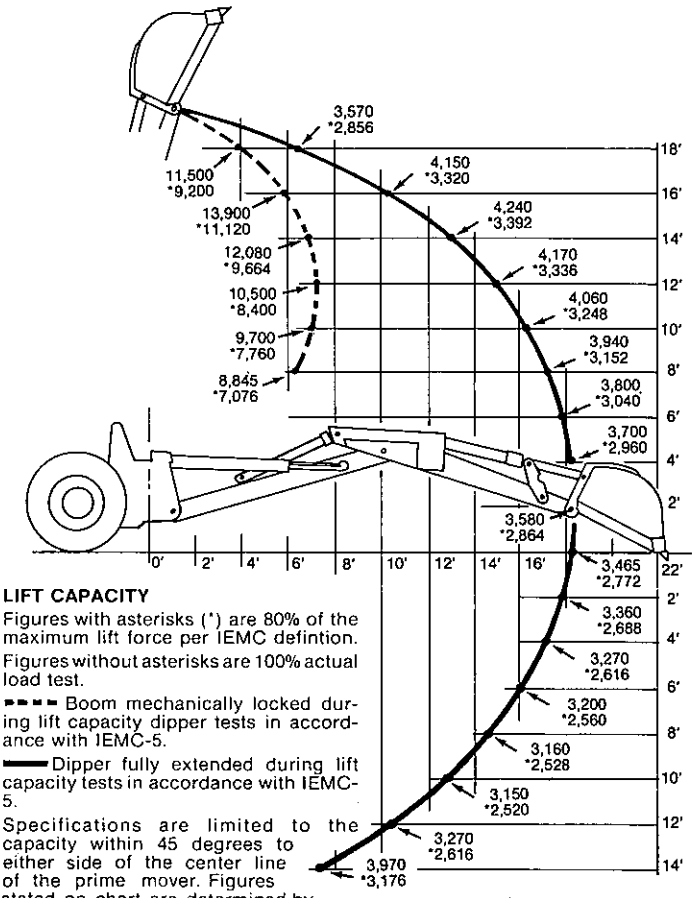

LIFT CAPACITY

Figures with asterisks (*) are 80% of the maximum lift force per IEMC defintion.

Figures without asterisks are 100% actual load test.

▪▪▪▪ Boom mechanically locked during lift capacity dipper tests in accordance with IEMC-5.

▬▬ Dipper fully extended during lift capacity tests in accordance with IEMC-5.

Specifications are limited to the capacity within 45 degrees to either side of the center line of the prime mover. Figures stated on chart are determined by static test and do not include dynamic factors.

Backhoe Buckets

Outside Widths	Weights
19" (trenching)	600 lbs
24" (trenching)	675 lbs
30" (trenching)	800 lbs
36" (trenching)	825 lbs
42" (trenching)	830 lbs

Note: All specifications are stated in accordance with IEMC or SAE Standards where applicable.

Important
J I Case Company reserves the right to change these specifications without notice and without incurring any obligation relating to such changes.

Sold and serviced by

Form No. CE 71072E Printed in U.S.A.