HD-6, HD-11

CRAWLER TRACTORS

service manual

STEERING CLUTCHES and BRAKES

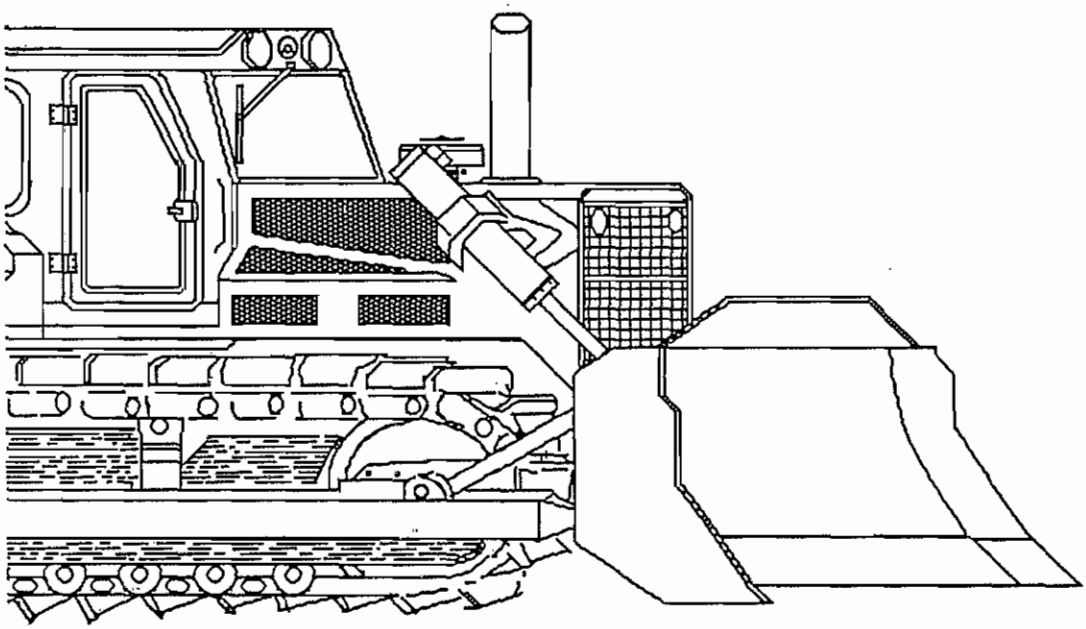

Form 70650433 English
2/89

AVOID ACCIDENTS

Most accidents, whether they occur in industry, on the farm, at home or on the highway, are caused by the failure of some individual to follow simple and fundamental safety rules or precautions. For this reason MOST ACCIDENTS CAN BE PREVENTED by recognizing the real cause and doing something about it before the accident occurs.

Regardless of the care used in the design and construction of any type of equipment there are conditions that cannot be completely safeguarded against without interfering with reasonable accessibility and efficient operation.

A careful operator is the best insurance against an accident.
The complete observance of one simple rule would prevent many thousand serious injuries each year.
That rule is:

Never attempt to clean, oil or adjust a machine while it is in motion.

WARNING

On machines having hydraulically, mechanically, and/or cable controlled equipment (such as shovels, loaders, dozers, scrapers, etc.) be certain the equipment is lowered to the ground before servicing, adjusting and/or repairing. If it is necessary to have the hydraulically, mechanically, and/or cable controlled equipment partially or fully raised to gain access to certain items, be sure the equipment is suitably supported by means other than the hydraulic lift cylinders, cable and/or mechanical devices used for controlling the equipment.

COPYRIGHT BY FIATALLIS

All rights reserved. Reproduction of text and illustrations in whole or in part, is strictly prohibited.

SAFETY RULES

GENERAL

Study the Operation and Maintenance Instruction Manual before starting, operating, maintaining, fueling, or servicing machine.

Read and heed all machine-mounted safety signs before starting, operating, maintaining, fueling or servicing machine.

Machine-mounted safety signs have been color coded yellow with black border and lettering for ***WARNING*** and red with white border and lettering for ***DANGER*** points.

Never attempt to operate the machine or its tools from any position other than seated in the operator's seat. Keep head, body, limbs, hands and feet inside operator's compartment at all times to reduce exposure to hazards outside the operator's compartment.

Do not allow unauthorized personnel to operate service or maintain this machine.

Always check work area for dangerous features. The following are examples of dangerous work areas: slopes, over hangs, timber, demolitions, fire, high walls, drop off, back fills, rough terrain, ditches, ridges, excavations, heavy traffic, crowded parking, crowded maintenance and closed areas. Use extreme care when in areas such as these.

An operator must know the machine's capabilities. When working on slopes or near drop offs be alert to avoid loose or soft conditions that could cause sudden tipping or loss of control.

Do not jump on or off machine. Keep two hands and one foot, or two feet and one hand, in contact with steps grab rails and handles at all times.

Do not use controls or hoses as hand holds when climbing on or off machine. Hoses and controls are movable and do not provide a solid support. Controls also may be inadvertently moved causing accidental machine or equipment movement.

Keep operator's compartment, stepping points, grab-rails and handles clear of foreign objects, oil, grease, mud or snow accumulation to minimize the danger of slipping or stumbling. Clean mud or grease from shoes before attempting to mount or operate the machine.

Be careful of slippery conditions on stepping points, hand rails, and on the ground. Wear safety boots or shoes that have a high slip resistant sole material.

For your personal protection. Do not attempt to climb on or off machine while machine is in motion.

Never leave the machine unattended with the engine running.

Always lock up machine when leaving it unattended. Return keys to authorized security. Heed all shut down procedures of the Operation and Maintenance Instruction Manual. Always set the parking brake when leaving the machine for any reason.

Do not wear rings, wrist watches, jewelry, loose or hanging apparel, such as ties, torn clothing, scarves, unbuttoned or unzipped jackets that can catch on moving parts. Wear proper safety equipment as authorized for the job. Examples: hard hats, safety shoes, heavy gloves, ear protectors, safety glasses or goggles, reflector vests, or respirators. Consult your employer for specific safety equipment requirements.

Do not carry loose objects in pockets that might fall unnoticed into open compartments. Do not use machine to carry loose objects by means other than attachments for carrying such objects.

DO NOT CARRY RIDERS unless the machine is equipped for carrying people to reduce personal exposure to being thrown off.

Do not operate machinery in a condition of extreme fatigue or illness. Be especially careful towards the end of the shift.

Roll Over Protective Structures are required on wheel loaders, dozer tractors, track type loaders, graders and scrapers by local or national requirements. *DO NOT* operate this machine without a Roll Over Protective Structure.

Do not operate a machine without a falling object protective structure (FOPS).

Do not operate this machine without a rear canopy screen when machine is equipped with rear mounted towing winch.

Seat belts are required to be provided with roll over protective structures or roll protection cabs by local or national regulations. Keep the safety belt fastened around you during operation.

Where noise exposure exceeds 90 dBA for 8 hours, wear authorized ear protective equipment per local or national requirements that apply.

Keep clutches and brakes on machine and attachments such as power control units, winches and master clutches adjusted according to Operation and Maintenance Instruction Manuals of the manufacturers at all times. *DO NOT* adjust machine with engine running except as specified.

Do not operate a machine with brakes out of adjustment. See the Operation and Maintenance Instruction Manual.

Move carefully when under, in or near machine or implements. Wear required protective equipment, such as hard hat, safety glasses, safety shoes, ear protectors.

To move a disabled machine, use a trailer or low boy truck if available. If towing is necessary, provide warning signals as required by local rules and regulations and follow Operation and Maintenance Instruction Manual recommendations. Load and unload on a level area that gives full support to the trailer wheels. Use ramps of adequate strength, low angle and proper height. Keep trailer bed clean of clay, oil and all materials that become slippery. Tie machine down securely to truck or trailer bed and block tracks (or wheels) as required by the carrier.

To prevent entrapment in cabs or mounted enclosures, observe and know the mechanics of alternate exit routes.

On machines equipped with suction radiator fans, be sure to periodically check all engine exhaust parts for leaks as exhaust gases are dangerous to the operator. Keep a vent open to outside air at all times when operating within a closed cab.

STARTING FLUID IS FLAMMABLE. Follow the recommendations as outlined in the Operation and Maintenance Instruction Manual and as marked on the containers. Store containers in cool, well-ventilated place secure from unauthorized personnel. *DO NOT PUNCTURE OR BURN CONTAINERS.*

Follow the recommendations of the manufacturer for storage and disposal.

Wire rope develops steel slivers. Use authorized protective equipment such as heavy gloves, safety glasses when handling.

OPERATION

Before starting machine, check, adjust and lock the operator's seat for maximum comfort and control of the machine.

DO NOT START OR OPERATE AN UNSAFE MACHINE. Before working the machine, be sure that any unsafe condition has been satisfactorily remedied. Check brakes, steering and attachment controls before moving. Advise the proper maintenance authority of any malfunctioning part or system. Be sure all protective guards or panels are in place, and all safety devices provided are in place and in good operating condition.

Check instruments at start-up and frequently during operation.

Do not run the engine of this machine in closed areas without proper ventilation to remove deadly exhaust gases.

Be sure exposed personnel in the area of operation are clear of the machine before moving the machine or its attachments. *WALK COMPLETELY AROUND* the machine before mounting. Sound horn. Obey flag man, safety signals and signs.

Know the principles of cross steering of crawler tractors. Read section in Operation and Maintenance Instruction Manual on cross steering.

Keep engine exhaust system and exhaust manifolds clear of combustible material. Equip machine with screens and guards when working under conditions of flying combustible material.

If engine has a tendency to stall for any reason under load or idle, report this for adjustment to a proper maintenance authority immediately. Do not continue to operate machine until condition has been corrected.

Never use bucket as a man-lift.

Use recommended bucket for machine and material load ability and heaping characteristics of material, terrain, and other pertinent job conditions.

Avoid abrupt starts and stops when transporting a loaded bucket.

Inspect your seat belt webbing and hardware at least twice a year for signs of fraying, wear or other weakness that could lead to failure.

Use only designated towing or pulling attachment points. Use care in making attachment. Be sure pins and locks as provided are secure before pulling. Stay clear of draw bars, cables or chains under load.

When pulling or towing through a cable or chain, do not start suddenly at full throttle. Take up slack carefully. Guard against kinking chains or cables. Inspect carefully for flaws before using. Do not pull through a kinked chain or cable due to the high stresses and possibility of failure of the kinked area. Always wear heavy gloves when handling chain or cable.

Be sure cables are anchored and the anchor point is strong enough to handle the expected load. Keep exposed personnel clear of anchor point and cable or chain. *DO NOT PULL OR TOW UNLESS OPERATOR'S COMPARTMENT OF MACHINES INVOLVED ARE PROPERLY GUARDED AGAINST POTENTIAL CABLE OR CHAIN BACKLASH.*

During operation always carry ripper in full raised position when not in use and lowered to ground when parked.

When counterweights have been provided, do not work machine if they have been removed unless their equivalent weight has been replaced. See the Operation and Maintenance Instruction Manual.

When operating a machine know what clearances will be encountered, overhead doors, wires, pipes, aisles, roadways; also the weight limitations of ground, floor, and ramps.

Know bridge and culvert load limits and do not exceed them. Know machine's height, width, and weight. Use a signal person when clearance is close.

Be sure that the exact location of gas lines, utility lines, sewers, overhead and buried power lines, and other obstructions or hazards are known. Such locations should be precisely marked by the proper authorities to reduce the risk of accidents. Obtain shut-down or relocation of any such facilities before starting work, if necessary.

Be certain to comply with all local, state, and federal regulations regarding working in the vicinity of power lines.

When roading find out what conditions are likely to be met - clearances, congestion, type of surface, etc. Be aware of fog, smoke or dust element that obscure visibility.

When backing, always look to where the machine is to be moved. Be alert to the position of exposed personnel. *DO NOT OPERATE* if exposed personnel enter the immediate work area.

Never travel a machine on a job site, in a congested area, or around people without a signal person to guide the operator.

In darkness, check area of operation carefully before moving in with machine. Use all lights provided. Do not move into area of restricted visibility.

Maintain clear vision of all areas of travel or work. Keep cab windows clean and repaired. Carry blade low for maximum visibility while traveling. Obtain and use fan blast deflectors where tractors are used a pusher tractors in tandem.

Transport a loaded bucket with the bucket as far tipped back and in as low a position as possible for maximum visibility, stability, and safest transport of the machine. Carry it at a proper speed for the load and ground conditions.

Carry the bucket low when traveling with a load.

Maintain a safe distance from other machines. Provide sufficient clearance for ground and visibility conditions. Yield right-of-way to loaded machines.

Avoid going over obstacles such as rough terrain, rocks, logs, curbs, ditches ridges, and railroad tracks whenever possible. When obstructions must be crossed, do so with extreme care at an angle if possible. Reduce speed - down-shift. Ease up to the break over point - pass the balance point slowly on the obstruction and ease down on the other side.

Cross gullies or ditches at an angle with reduced speed after insuring ground conditions will permit a safe traverse.

Be alert to soft ground conditions close to newly constructed walls. The fill material and weight of machine may cause the wall to collapse under the machine.

Operate at speeds slow enough to insure complete control at all times. Travel slowly over rough ground, on slopes or near drop offs, in congested areas or on ice or slippery surfaces.

Be alert to avoid changes in traction conditions that could cause loss of control. *DO NOT* drive on ice or frozen ground conditions when working the machine on steep slopes or near drop offs.

Keep the machine well back from the edge of an excavation.

Be especially careful when traveling up or down slopes. Position the bucket in such a way as to provide a possible anchorage on the ground in case of a slide.

When proceeding across a hill side proceed slowly. Never turn sharply up hill or down hill.

Avoid side hill travel whenever possible. Drive up and down the slope. Should the machine start slipping sideways on a grade, turn it immediately downhill.

In steep down hill operation, do not allow engine to over speed. Select proper gear before starting down grade.

There is no substitute for good judgement when working on slopes.

The grade of slope you should attempt will be limited by such factors as condition of the ground, load being handled, the type of machine, speed of machine and visibility.

NEVER COAST the machine down grades and slopes with the transmission in neutral on power shift machines, or clutch disengaged on manually shifted machines.

To reduce the danger of uncontrolled machine, choose a gear speed before proceeding down grade that will hold machine to proper speeds for conditions.

Operating in virgin rough terrain that includes previously mentioned hazards is called pioneering. Be sure you know how this is done. Danger from falling branches and upturning roots is acute in these areas.

When pushing over trees, the machine must be equipped with proper over head guarding. Never allow a machine to climb up on the root structure particularly while the tree is being felled. Use extreme care when pushing over any tree with dead branches.

Avoid brush piles, logs or rocks. *DO NOT DRIVE THE MACHINE ONTO BRUSH PILES, LOGS, LARGE ROCKS* or other surface irregularities that break traction with the ground especially when on slopes or near drop offs.

Avoid operating equipment too close to an over hang or high wall either above or below the machine. Be on the look out for caving edges, falling objects and slides. Beware of concealment by brush and under growth of these dangers.

Park in a non-operating and non-traffic area or as instructed. Park on firm level ground if possible. Where not possible, position machine at a right angle to the slope, making sure there is no danger of uncontrolled sliding movement. Set the parking brake.

Never park on an incline without carefully blocking the machine to prevent movement.

If parking in traffic lanes cannot be avoided, provide appropriate flags, barriers, flares and warning signals as required. Also provide advance warning signals in the traffic lane of approaching traffic.

Move the machine away from pits, trenches, overhangs and over head power lines before shutting down for the day.

When stopping operation of the machine for any reason, always return the transmission or hydrostatic drive control to neutral and engage the control lock to secure the machine for a safe start up. Set parking brake, if so equipped.

Never lower attachments or tools from any position other than seated in operator's seat. Sound the horn. Make sure the area near the attachment is clear. Lower the attachment slowly. *DO NOT USE* float position to lower hydraulic equipment.

Always before leaving the operator's seat and after making certain all people are clear of the machine, slowly lower the attachments or tools flat to the ground in a positive ground support position. Move any multi purpose tool to positive closed position. Return the controls to hold. Place transmission control in neutral and move engine controls to off position. Engage all control locks, set parking brake, and open and lock the master (key, if so equipped) switch. Consult Operation and Maintenance Instruction Manual.

Always follow the shut down instructions as outlined in the Operation and Maintenance Instruction Manual.

MAINTENANCE

Do not perform any work on equipment that is not authorized. Follow the Maintenance or Service Manual procedures.

Machine should not be serviced with anyone in the operator's seat unless they are qualified to operate the machine and are assisting in the servicing.

Shut off engine and disengage the Power Take Off lever if so equipped before attempting adjustments or service.

Always turn the master switch (key switch if so equipped) to the *OFF* position before cleaning, repairing, or servicing and when parking machine to forestall unintended or unauthorized starting.

Disconnect batteries and *TAG* all controls according to local or national requirements to warn that work is in progress. Block the machine and all attachments that must be raised per local or national requirements.

Never lubricate, service or adjust a machine with the engine running, except as called for in the Operation and Maintenance Instruction Manual. Do not wear loose clothing or jewelry near moving parts.

Do not run engine when refueling and use care if engine is hot due to the increased possibility of a fire if fuel is spilled.

Do not smoke or permit any open flame or spark near when refueling, or handling highly flammable materials.

Always place the fuel nozzle against the side of the filler opening before starting and during fuel flow. To reduce the chance of a static electricity spark, keep contact until after fuel flow is shut off.

Do not adjust engine fuel pump when the machine is in motion.

Never attempt to check or adjust fan belts when engine is running.

When making equipment checks that require running of the engine, have an operator in the operator's seat at all times with the mechanic in sight. Place the transmission in neutral and set the brakes and lock. *KEEP HANDS AND CLOTHING AWAY FROM MOVING PARTS.*

Avoid running engine with open unprotected air inlets. If such running is unavoidable for service reasons, place protective screens over all inlet openings before servicing engine.

Do not place head, body, limbs, feet, fingers, or hands near rotating fan or belts. Be especially alert around a pusher fan.

Keep head, body, limbs, feet, fingers, or hands away from bucket, blade or ripper when in raised position.

If movement of an attachment by means of machine's hydraulic system or winches is required for service or maintenance, do not raise or lower attachments from any position other than when seated in the operator's seat. Before starting machine or moving attachments or tools, set brakes, sound horn and call for an all clear. Raise attachments slowly.

Never place head, body, limbs, feet, fingers, or hands into an exposed portion between uncontrolled or unguarded scissor points of machine without first providing secure blocking.

Never align holes with fingers or hands - Use the proper aligning tool.

Disconnect batteries before working on electrical system or repair work of any kind.

Check for fuel or battery electrolyte leaks before starting service or maintenance work. Eliminate leaks before proceeding.

BATTERY GAS IS HIGHLY FLAMMABLE. Leave battery box open to improve ventilation when charging batteries. Never check charge by placing metal objects across the posts. Keep sparks or open flame away from batteries. Do not smoke near battery to guard against the possibility of an accidental explosion.

Do not charge batteries in a closed area. Provide proper ventilation to guard against an accidental explosion from an accumulation of explosive gases given off in the charging process.

Be sure to connect the booster cables to the proper terminals (+ to +) and (- to -) at both ends. Avoid shorting clamps. Follow the Operation and Maintenance Instruction Manual procedure.

Due to the presence of flammable fluid, never check or fill fuel tanks, storage batteries or use starter fluid near lighted smoking materials or open flame or sparks.

Rust inhibitors are volatile and flammable. Prepare parts in well ventilated place. Keep open flame away - *DO NOT SMOKE.* Store containers in a cool well ventilated place secured against unauthorized personnel.

Do not use an open flame as a light source to look for leaks or for inspection anywhere on the machine.

DO NOT pile oily or greasy rags - they are a fire hazard. Store in a closed metal container.

SAFETY RULES

Never use gasoline or solvent or other flammable fluid to clean parts. Use authorized commercial, non-flammable, non-toxic solvents.

Never place gasoline or diesel fuel in an open pan.

Shut off engine and be sure all pressure in system has been relieved before removing panels, housings, covers, and caps. See Operation and Maintenance Instruction Manual.

Do not remove hoses or check valves in the hydraulic system without first removing load and relieving pressure on the supporting cylinders. Turn radiator cap slowly to relieve pressure before removing. Add coolant only with engine stopped or idling if hot. See Operation and Maintenance Instruction Manual.

Fluid escaping under pressure from a very small hole can almost be invisible and can have sufficient force to penetrate the skin. Use a piece of card board or wood to search for suspected pressure leaks. *DO NOT USE HANDS.* If injured by escaping fluid, see a doctor at once. Serious infection or reaction can develop if proper medical treatment is not administered immediately.

Never use any gas other than dry nitrogen to charge accumulators. See Operation and Maintenance Instruction Manual.

When making pressure checks use the correct gauge for expected pressure. See the Operation and Maintenance Instruction Manual or Service Manual for guidance.

For field service, move machine to level ground if possible and block machine. If work is absolutely necessary on an incline, block machine and its attachments securely. Move the machine to level ground as soon as possible.

Brakes are inoperative when manually released for servicing. Provision must be made to maintain control of the machine by blocking or other means.

Block all wheels before bleeding or disconnecting any brake system lines and cylinders.

Never use make shift jacks when adjusting track tension. Follow the Undercarriage Service Manual.

Know your jacking equipment and its capacity. Be sure the jacking point used on the machine is appropriate for the load to be applied. Be sure the support of the jack at the machine and under the jack is appropriate and stable. Any equipment up on a jack is dangerous. Transfer load to appropriate blocking as a safety measure before proceeding with service or maintenance work according to local or national requirements.

Always block with external support any linkage or part on machine that requires work under the raised linkage, parts, or machine per local or national requirements. Never allow anyone to walk under or be near unblocked raised equipment. Avoid working or walking under raised blocked equipment unless you are assured of your safety.

When servicing or maintenance requires access to areas that cannot be reached from the ground, use a ladder or step platform that meets local or national requirements to reach the service point. If such ladders or platforms are not available, use the machine hand holds and steps as provided. Perform all service or maintenance carefully.

Shop or field service platforms and ladders used to maintain or service machinery should be constructed and maintained according to local or national requirements.

Lift and handle all heavy parts with a lifting device of proper capacity. Be sure parts are supported by proper slings and hooks. Use lifting eyes if provided. Watch out for people in the vicinity.

In lifting and handling heavy parts, slings must be of adequate strength for the purpose intended and must be in good condition.

Handle all parts with extreme care. Keep hands and fingers from between parts. Wear authorized protective equipment such as safety glasses, heavy gloves, safety shoes.

When using compressed air for cleaning parts use safety glasses with side shields or goggles. Limit the pressure to 207 kPa (30 psi) according to local or national requirements.

Wear welders protective equipment such as dark safety glasses, helmets, protective clothing, gloves and safety shoes when welding or burning. Wear dark safety glasses near welding. *DO NOT LOOK AT ARC WITHOUT PROPER EYE PROTECTION.*

Replace seat belts every two years on open canopy units and every three years on machines with cabs or at change of ownership.

Wear proper protective equipment such as safety goggles or safety glasses with side shields, hard hat, safety shoes, heavy gloves when metal or other particles are apt to fly or fall.

Use only grounded auxiliary power source for heaters, chargers, pumps and similar equipment to reduce the hazards of electrical shock.

Keep maintenance area *CLEAN* and *DRY*. Remove water or oil slicks immediately.

Remove sharp edges and burrs from reworked parts.

Be sure all mechanics tools are in good condition. *DO NOT* use tools with mushroomed heads. Always wear safety glasses with side shields.

Do not strike hardened steel parts with anything other than a soft iron or non-ferrous hammer.

Do not rush. Walk, do not run.

Know and use the hand signals used on particular jobs and know who has the responsibility for signaling.

SAFETY RULES

Face the access system when climbing up and down.

Apply the parking device and place the transmission in neutral before starting the machine.

Do not bypass the starter safety switch. Repair the starter safety controls if they malfunction.

Fasten seat belt before operating.

Steering should be checked to both right and left. Brakes should be tested against engine power. Clutch and transmission controls should be moved through or to neutral positions to assure disengagement. Operate all controls to insure proper operation. If any malfunctions are found, park machine, shut off engine, report and repair before using machine.

If the power steering or the engine ceases operating, stop the machine motion as quickly as possible. Lower equipment, set parking device and keep machine securely parked until the malfunction is corrected or the machine can be safety towed. Never lift loads in excess of capacity.

Should the machine become stuck or frozen to the ground, back out to avoid roll over.

Know and understand the job site traffic flow patterns.

Keep the machine in the same gear going down hill as used for going up hill.

When roading a machine, know and use the signaling devices required on the machine. Provide an escort for roading where required.

Always use the recommended transport devices when roading the machine.

Do not attempt repairs unless proper training has been provided.

Use extreme caution when removing radiator caps, drain plugs, grease fittings or pressure taps. Park the machine and let it cool down before opening a pressurized compartment.

Release all pressure before working on systems which have an accumulator.

When necessary to tow the machine, do not exceed the recommended towing speed, be sure the towing machine has sufficient braking capacity to stop the towed load. If the towed machine cannot be braked, a tow bar must be used or two towing machines must be used - one in front pulling and one in the rear to retard. Avoid towing over long distances.

Observe proper maintenance and repair of all pivot pins, hydraulic cylinders, hoses, snap rings and main attaching bolts.

Always keep the brakes and steering systems in good operating condition.

Replace all missing, illegible or damaged safety signs. Keep all safety signs clean.

Do not fill the fuel tank to capacity. Allow room for expansion.

Wipe up spilled fuel immediately.

Always tighten the fuel tank cap securely. Should the fuel cap be lost, replace it only with the original manufacturers approved cap. Use of a non-approved cap may result in overpressurization of the tank.

Never drive the machine near open fires.

Use the correct fuel grade for the operating season.

FOREWORD

Always furnish serial number if making an inquiry to dealer or factory about this machine.

Many equipment owners employ the Dealer Service Department for all work other than routine lubrication and minor service. This practice is encouraged, as our Dealers are well informed and equipped to render efficient service by factory trained mechanics.

This manual may not be reprinted or reproduced, either in whole or in part, without written permission of Fiatallis ®.

Illustrations show standard and optional items.

IMPORTANT

The information in this manual was current at the time of publication. It is our policy to constantly improve our product and to make available additional items. These changes may affect procedures outlined in this manual. If variances are observed, verify the information through your Dealer.

Fiatallis is not responsible for any liability arising from any damage resulting from defects caused by parts and/or components not approved by Fiatallis for use in maintaining and/or repairing products manufactured or merchandized by Fiatallis.

In any case, no warranty of any kind is made or shall be imposed with respect to products manufactured or merchandized by Fiatallis when failures are caused by the use of parts and/or components not approved by Fiatallis.

INDEX

TOPIC 1—GENERAL DESCRIPTION

HD6 and HD11 steering clutches and brakes are similar. Illustrations in this manual are of various models; in any case, illustrations are applicable to procedures described.

The Steering Clutch Assemblies are dry type with multiple plates; each is enclosed in a brake drum and located in steering clutch compartments of final drive housing. Proper clutch is disengaged to turn tractor by pulling on corresponding lever.

HD6 steering clutch linkage is straight mechanical linkage;

HD11 (prior to S/N 6069) steering linkage uses mechanical spring-loaded boosters;

HD11 (eff. S/N 6069 and up) steering clutch linkage is hydraulically power boosted.

Steering brakes are used in conjunction with steering clutches to stop rotation of final drives to permit steering of tractor.

Brakes are dry-type and consist of a two section brake band (with riveted linings). Bands are located around brake drums enclosing steering clutches.

TOPIC 2—TROUBLE SHOOTING

Refer to pertinent Topics in this Manual for detailed information to perform remedies listed; perform remedies in order given for best results.

A. BRAKES "KICK", OR ERRATIC

CAUSES	REMEDIES
1. Band support screw improperly adjusted.	1. Adjust support screw.
2. Brake lever bracket (on front wall of steering compartment) loose.	2. Tighten attaching capscrews.
3. Brake drum and/or hub loose.	3. Tighten attaching capscrews.

B. SHORT BRAKE LINING LIFE

CAUSES	REMEDIES
1. Operator does not fully disengage steering clutches before applying brakes.	1. Educate operator.
2. Parking brake locks binding.	2. "Free-up" locks.
3. Brake drums scored.	3. Repair or replace drums.
4. Brakes dragging or clutches not fully disengaging, due to improperly adjusted control linkage.	4. Adjust brake and/or steering control linkage.

C. SHORT STEERING CLUTCH LIFE

CAUSES	REMEDIES
1. Operator does not fully disengage steering clutches during operation.	1. Educate operator.
2. Dirty clutch compartments.	2. Wash clutches and brakes.
3. Steering control linkage improperly adjusted (clutch not fully disengaging).	3. Adjust steering linkage.

D. STEERING SLOW; TURNING RADIUS LARGE

CAUSES	REMEDIES
1. Brakes or steering clutches mal-functioning; determine faulty components before proceeding. Test both left and right steering and brakes even though only one side seems to be mal-functioning. Use test method indicated in "remedies" column for all tractors, including HD11 tractors with hydraulic steering.	1. Drive tractor forward on level surface at approx. 1/2 throttle and depress brake pedal on side in question; do not pull steering lever. a. If tractor tends to slow-down, but does not tend to turn, brake is working good and steering clutch on that side is not slipping. Therefore, steering linkage on that side is improperly adjusted, clutch is improperly assembled, (or in case of HD11 with hydraulic steering, a hydraulic mal-function affecting one side only); in either case, clutch does not fully disengage during normal operation. It is further possible opposite steering clutch IS slipping (especially when tractor is loaded). b. If tractor tends to slow down and also tends to turn, brake is working good but steering clutch on that side is slipping. Therefore, that clutch is excessively worn, extremely dirty or oil soaked; steering linkage improperly adjusted, or clutch is improperly assembled (or in case of HD11 with hydraulic steering, a hydraulic mal-function affecting one side only); in either case, clutch does not fully engage during normal operation. c. If tractor does not tend to slow down, brake is mal-functioning due to improper adjustment, oil soaked linings, worn or broken components.
2. Steering clutch on affected side does not fully DISENGAGE during normal operation when lever is pulled.	2. a. Adjust steering linkage. b. Check steering clutch and/or components for proper assembly and installation. c. HD11 with hydraulic steering, refer to hydraulic mal-functions in "CAUSES" column.
3. Steering clutch does not fully ENGAGE during normal operation, or slips when is fully engaged.	3. a. Adjust steering linkage. b. Wash steering clutches. c. Rebuild or replace steering clutch and/or components. d. HD11 with hydraulic steering, refer to hydraulic mal-functions in "CAUSES" column.
4. Brakes mal-functioning.	4. a. Adjust brake linkage. b. Wash brakes and steering clutches. c. Repair and/or replace brake components.
5. Hydraulic system mal-function affecting one side only; (steering linkage is properly adjusted and steering clutches are OK). HD11 eff. S/N. 6069 only.	5. a. Check pressure line from pump for leaks. b. Plunger on affected side in hydraulic control valve not seating properly against piston; replace plunger and/or piston.

6. Hydraulic system mal-function affecting both sides; (steering linkage is properly adjusted and steering clutches are OK). HD11 eff. S/N 6069 only.	6. a. Check oil level in hydraulic system tank. b. Check suction line, return line, and both pressure lines for leaks (sucking air on suction and return line). c. Repair or replace pump and/or pump drive.

E. STEERING CONTROL LEVERS "CHATTER"

(HD11 with hydraulic steering only, eff. S/N 6069).

CAUSES	REMEDIES
1. Low oil level in hydraulic system.	1. Fill system to proper level.
2. Air in hydraulic system.	2. Check suction and return line for sucking air; loosen vent cock in control valve and allow oil to flow out until free of bubbles; fill system to proper level.

TOPIC 3—STEERING HYDRAULIC SYSTEM (HD11, EFF. S/N. 6069 AND UP)

A. DESCRIPTION

Steering hydraulic system, Fig. 1, consists of control valve, oil pump, oil reservoir, and necessary lines; system provides power assist to disengage steering clutches and is controlled by mechanical linkage activated by operator. Hydraulic system pressure is non-adjustable; system is designed with proper "built-in" operating pressure to disengage steering clutches.

Pump supplies oil to manifold on top of control valve; oil passes through valve and back to pump through return line; reservoir is connected to return line to supply additional oil to suction side of pump if necessary.

Operator pulls steering control lever to cause a spool valve (either left or right) to move against control piston and stop oil from flowing through piston. Pressure builds up and forces piston to move; as piston moves, it forces mechanical linkage to disengage steering clutch.

Pump (mounted at left rear side of engine timing gear housing) has two sets of gears; front set of gears supply oil to right control piston and rear set of gears supply oil to left control piston.

Control valve (mounted on top of bevel gear compartment) has a spool valve, control piston, and internal linkage (identical on each side) for operating either left or right steering clutch.

B. LUBRICANT SPECIFICATIONS, CAPACITY, AND SERVICE

1. LUBRICANT SPECIFICATIONS

		ASTM TEST METHOD
Viscosity @ 0° F., seconds, max.	12000	D 343
Viscosity @ 100° F., seconds. .	150 - 190	D 88
Viscosity Index, min.	90	D 567
Flash Point, deg. F., min. . .	370	D 92
Neutralization No., mgs. KOH/g. oil	0.10	D 664
Aniline Point, deg. F.	180 - 220	D 611
Oxidation Stability, hrs., min.	1000	D 943
Pour Point, deg. F., min. . .	Minus 20	D 97
Rust Test.	Pass	D 665
Foam Inhibited		

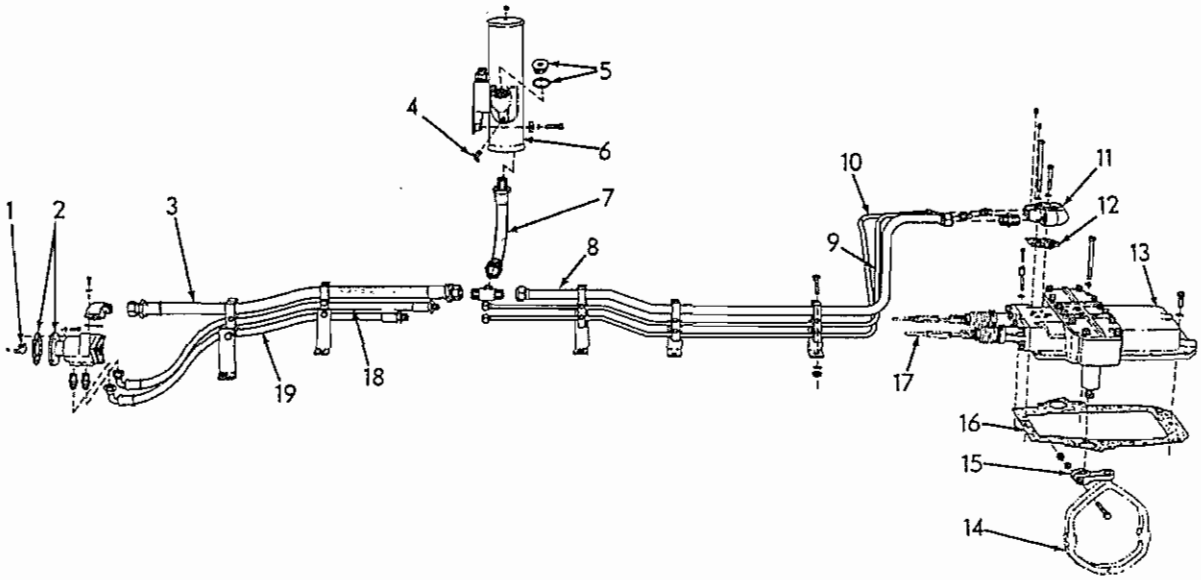

Fig. 1 -- Steering Hydraulic System (HD11, eff. S/N 6069 and up) (T-41911)

1. Coupling (pump drive)
2. Pump and gasket
3. Return line (suction)
4. Cock (oil level)
5. Filler plug and gasket
6. Reservoir
7. Supply line
8. Return line
9. Pressure line (left)
10. Pressure line (right)
11. Manifold
12. Gasket
13. Control valve
14. Yoke
15. Lever (actuating)
16. Gasket
17. Rod (steering control)
18. Pressure line (left)
19. Pressure line (right)

Hydraulic oil should be compatible in all proportions with SAE 10W engine crankcase oil of similar quality with prevailing detergency levels.

Hydraulic oil, in its original state, should not contain any substances added to improve or increase viscosity index. Oil should be free of water, dirt, sediment and foreign matter and should not be corrosive or otherwise injurious to any materials commonly used in hydraulic systems.

In event atmospheric temperature is lower than pour point of hydraulic oil being used, oil must be diluted 20% with kerosene (do not use diesel fuel or furnace oil). For continuous operation at atmospheric temperatures 32° F. and higher, diluted oil must be drained and system refilled with hydraulic oil of aforementioned general specifications.

If desired, SAE 10W engine crankcase oil of classifications for Service MM, MS, DG, DM, or DS can be used. Multi-viscosity oils such as SAE 10W-30 are not recommended. For operation at atmospheric temperatures below minus 10° F., SAE 10W engine crankcase oil must be diluted 20% with kerosene. For continuous operation at atmospheric temperatures of 32° F. and above, diluted oil must be drained and system refilled with SAE 10W oil meeting aforementioned classifications.

No specific brands of oil are recommended. Use only products qualified under aforementioned oil viscosity specifications and classifications and recommended by reputable oil companies.

2. CAPACITY AND SERVICE

Capacity is . . . . . 2 gals.

Drain, flush, and refill system after each 1000 hours of operation.

a. Remove drain plug from rear of control valve and from reservoir.

b. Disconnect hydraulic lines from pump and loosen vent at top of control valve.

c. Flush system and refill with specified lubricant.

C. STEERING CONTROL VALVE

1. REMOVAL

a. Remove oil drain plug (in rear of control valve) and allow oil to drain.

b. Remove seat assembly and fuel tank.

c. Disconnect hydraulic lines and control rods; remove manifold, Fig. 1 (11).

d. Remove control valve attaching capscrews and clutch compartment covers; loosen actuating levers, Fig. 1 (15) from actuating shafts; raise and remove control valve assy.

2. DISASSEMBLY

Disassemble valve as shown in Fig. 2; refer to following notes:

NOTES

a. Do not remove piston pin, Fig. 2 (23), unless piston or connecting rod is to be replaced.

b. Remove o-ring, Fig. 2 (13), before removing retainer (14).

c. Do not remove bearings from retainer unless bearings are to be replaced.

3. INSPECTION

a. Spool Valve
Replace if scored, or O.D. worn to measure LESS than . . . . . .624"
Chamfered seat at piston end must be 45° and concentric with O.D. of spool within .003". Seat must be smooth, and free of indentation.

b. Spool Bracket
Replace if spool bore is scored, or I.D. worn to measure MORE than . . . .626".

c. Piston
Replace piston if scored, or O.D. worn to measure LESS than . . . . . .1.998".
Chamfered seat at spool end must be 45° and concentric with O.D. of piston within .003". Seat must be smooth, and free of indentation.

d. Valve Housing
Replace housing if piston bores are scored, or I.D. worn to measure MORE than . . . . . 2.0025".

e. Actuating Shaft and Bearings
Replace shaft if serrations are badly worn, or if shaft O.D. (at bearing locations) is scored, or worn to measure LESS than . . . . . .999".
Replace bearings if shaft "wobbles" in retainer (bearings installed) or if shaft is replaced.

4. ASSEMBLY

a. Press actuating shaft top bearing, Fig. 2 (15) into retainer (14), 1/4" below top surface of retainer; press bottom bearing into retainer (from bottom) until flush with bearing bore; install new seal (12) into seal bore of retainer (lip toward bearing).

b. Position new retainer gaskets, Fig. 2 (11); install and secure retainers. Place new O-

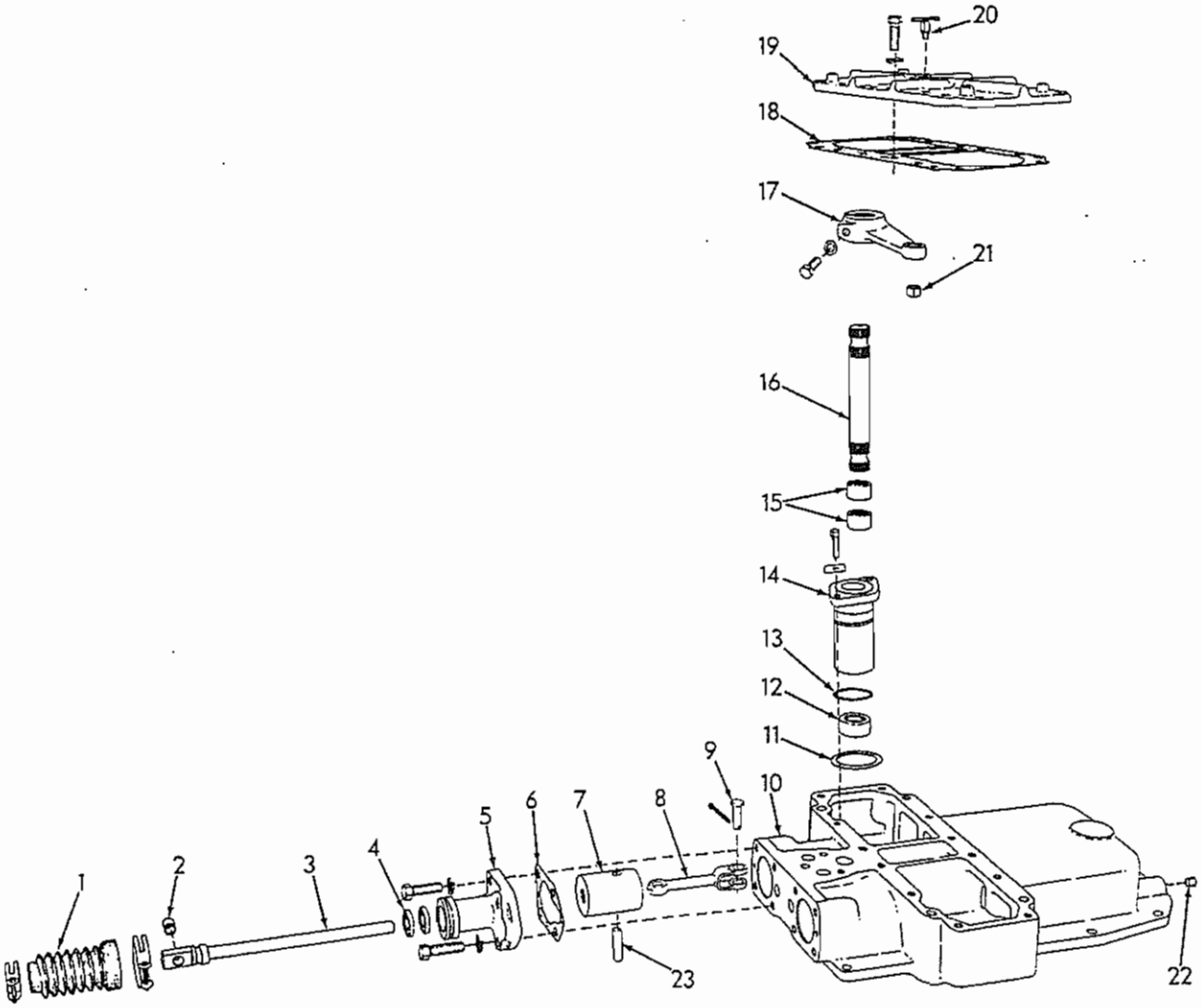

Fig. 2 -- Hydraulic Control Valve Parts
(T-13126)

1. Boot
2. Bushing
3. Spool valve
4. Seals
5. Bracket
6. Gasket
7. Piston
8. Rod
9. Yoke pin
10. Housing
11. Gasket
12. Seal
13. O-ring
14. Retainer
15. Bearings
16. Shaft (actuating)
17. Lever (actuating)
18. Gasket
19. Cover
20. Vent cock
21. Bushing
22. Plug (drain)
23. Pin (piston)

ring in groove of each retainer.

c. Place upper actuating lever on end of each shaft and secure with clamping capscrew; lubricate shaft, seats, and bearings and install each shaft down through retainer.

CAUTION

Be certain serrations on shaft do not damage oil seal as shaft is installed.

d. Attach connecting rod, Fig. 2 (8) to piston with piston pin (23); be certain pin is centered in piston; install piston and rod into housing from front; connect piston and rod to lever (17) with pin (9). Place new gasket (18) in position (use gasket cement) and install cover (19).

e. Press new seals, Fig. 2 (4) in spool brackets (lip of inner seal facing in, lip of outer seal facing out); position new bracket gaskets on housing (use gasket cement on housing and brackets) and secure brackets to housing.

f. Install boots on brackets with vent holes in boots at bottom; lubricate and install spool valves carefully into brackets; install drain plug in rear of housing and vent cock in top cover.

5. INSTALLATION

a. Position new control valve gasket on final drive housing (use gasket cement on both sides of gasket); place control valve in position and secure with attaching capscrews. (Eff. S/N 2727, a tapped head capscrew and breather is used in right front bolt hole).

b. Push spool valve in to contact piston; rotate bottom end of actuating shaft by hand to push spool valve out to obtain a dimension of 8 15/16" (+ or - 7/16") standout from front machined face of control valve housing to center of hole in front end of spool (refer to Fig. 2A).

c. Install actuating lever on actuating shaft, and on ball at top of throwout yoke to maintain specified spool "standout" when spool is contacting piston AND throwout yoke is holding throwout sleeve tight against steering clutch.

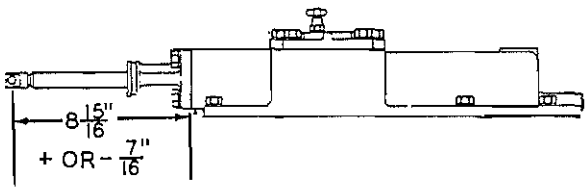

Fig. 2A -- Spool Valve "Standout" Dimension (T-41915)

Install oil manifold, Fig. 1 (11) and new gasket (12) in position on top of manifold (coat both sides of gasket with gasket cement); connect pressure and return lines to manifold.

Refer to "STEERING AND BRAKE ADJUSTMENTS" and install and adjust steering control linkage.

Loosen vent cock, Fig. 2 (20) and fill system with specified oil through reservoir filler plug, Fig. 1 (5); install seat assembly and fuel tank. Recheck oil level in reservoir after engine has run a few minutes.

D. STEERING PUMP

1. REMOVAL AND DISASSEMBLY

a. Clean pump and surrounding area; disconnect suction and pressure lines, Fig. 1; remove pump and drive coupling.

b. Mark stator and front and rear gear housings with indexing marks to aid in reassembly.

c. Remove rear cap, Fig. 3 (13) and O-ring (14); remove screws (12).

d. Tap rear housing with soft hammer to separate housings; mark all gears so they may be reassembled in same positions if re-used. Remove rear driven gear and shaft assembly; slide rear drive gear from drive shaft and remove rear key, Fig. 3 (15).

e. Tap front gear housing with soft hammer and separate from stator.

CAUTION

Do not pry housings or stator apart.

Remove front driven gear and front drive shaft and gear; remove snap rings, front drive gear, and key from drive shaft. Do not remove bearings from stator or housings unless bearings are to be replaced. Press oil seal from stator.

2. INSPECTION

Clean all components and inspect as follows:

a. Gear housings
If wear pattern on SUCTION side extends more than half way to pressure side, or if gear bore depth measures MORE than .7535", REPLACE PUMP.

b. Gears
If gears are excessively scored, chipped, or worn to measure LESS than .748" long, or LESS than 1.1635" diameter, REPLACE GEARS.

c. Shafts
If O.D. of shafts at bearing locations are scored, or worn to measure LESS than .438" diameter, REPLACE SHAFTS AND BEARINGS.

d. Bearings
If needle bearings are pitted, or if a .021" feeler gauge can be inserted between needles, REPLACE BEARINGS.

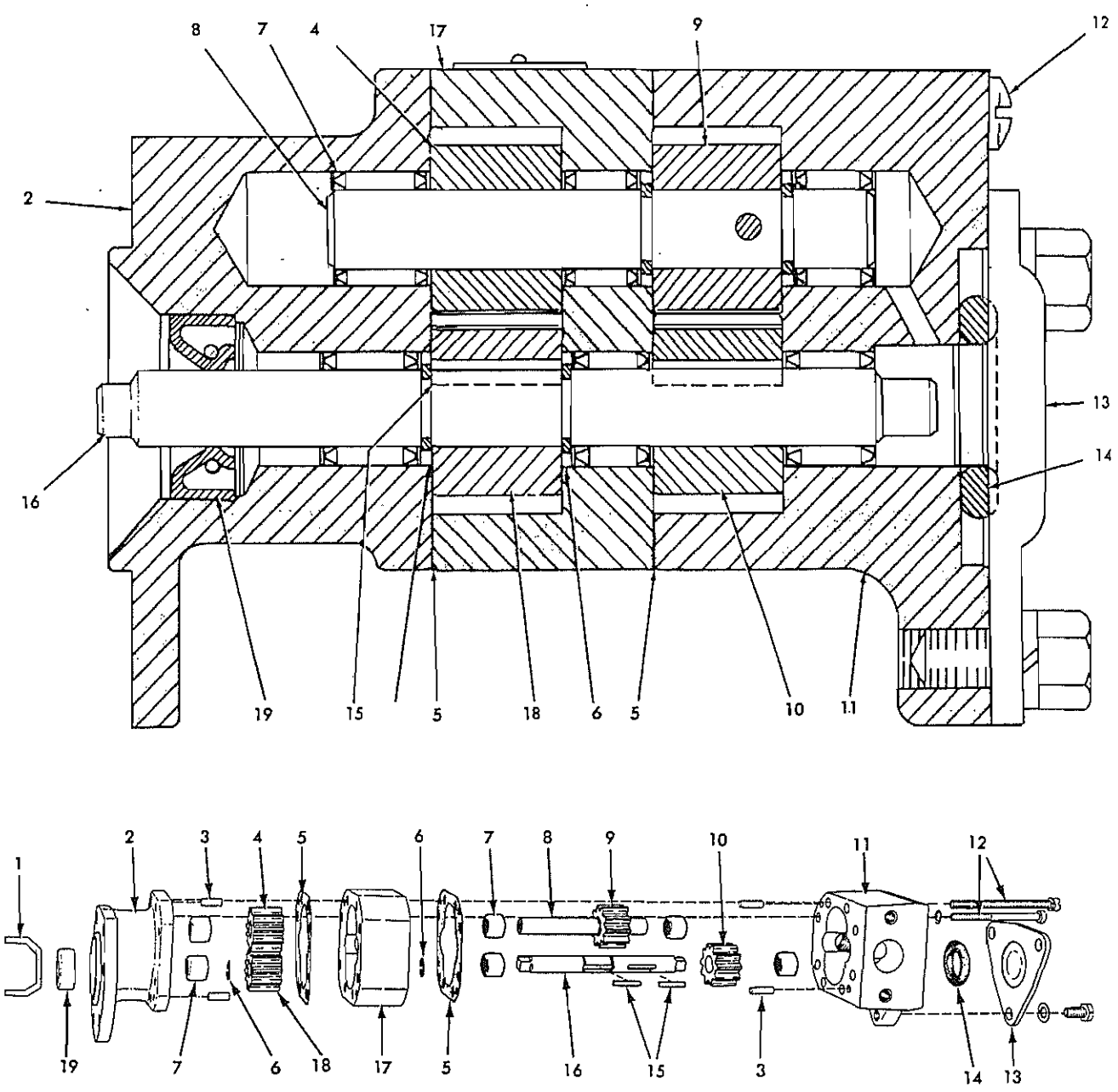

Fig. 3 -- Steering Pump
(T-36930 & T-36931)

1. Coupling (pump drive)
2. Stator
3. Dowel pins
4. Gear (front driven)
5. Gaskets
6. Snap rings
7. Bearings
8. Shaft (driven)
9. Gear (rear driven)
10. Gear (rear drive)
11. Housing (rear gears)
12. Screws
13. Cap
14. O-ring
15. Keys
16. Shaft (drive)
17. Housing (front gears)
18. Gear (front drive)
19. Seal

3. ASSEMBLY

a. Remove all burrs from ground surfaces with fine mill stone; use all new gaskets and seals to assemble pump.

b. Clean all components and lubricate liberally with clean oil; to replace bearings, press on stamped side of bearings until .032" below machined surfaces to clear snap rings on shafts when pump is assembled (See Fig. 3).

c. Press new seal, Fig. 3 (19) into stator as

shown; install a snap ring, a key, a gear (observe marks on gears made at disassembly and reinstall in same positions if re-used) and another snap ring on drive shaft.

d. Insert drive shaft in bore of stator; use care to prevent damage to oil seal; place new gasket in position on stator; place front driven gear, Fig. 3 (4) on stator.

e. Align marks on stator with marks on front housing; place front housing over drive shaft and gears and into position on stator.

f. Install remaining key in drive shaft; rear drive gear over key; driven gear and shaft into housing and in mesh with drive gear (align marks on gears).

g. Place new gasket on rear face of front housing; align marks on housings and install rear housing.

h. Install screws, Fig. 3 (12) and tighten securely; two longest screws must be installed at top (driven shaft side) of pump.

i. Install O-ring and rear cap (13) (14); tighten cap attaching capscrews securely.

4. BENCH TEST SPECIFICATIONS

a. Pump capacity - each set of gears - 1.5 gpm (min.) @ 1200 rpm, W/SAE #10 oil at 180° F.

b. Rotation - clockwise (looking at drive end).

5. INSTALLATION

a. Install drive coupling on pump drive shaft; use small amount of grease to hold coupling in position.

b. Place new gasket against rear of timing gear housing and install pump; be certain tangs of drive coupling engage slots of pump drive gear. Secure pump with attaching capscrews.

c. Connect suction and pressure lines securely, but do not over-tighten fittings.

E. ADJUSTMENTS

There are no pressure adjustments required to steering hydraulic system; however, steering control linkage must be properly adjusted to insure proper operation of system. Refer to "STEERING AND BRAKE LINKAGE ADJUSTMENTS" for information.

TOPIC 4—WASHING STEERING CLUTCHES AND BRAKES

If steering clutches or brakes slip due to oil or grease on clutch plates or brake linings, wash clutches and brakes with solvent as follows:

Install drain plugs in drain hole in bottom of each steering clutch compartment, Fig. 4.

Remove brake band adjuster covers from top of each clutch compartment and pour approx. two gallons of solvent in each clutch compartment; drive tractor back and forth in a straight line for five minutes. Leave steering clutches engaged. Oil on exterior of clutch assemblies and brakes will be washed off in this operation.

Drain compartments and refill each with another 2 gallons of clean solvent; drive tractor back and forth for another five minutes continually disengaging one clutch and then the other. Oil on friction surfaces will be washed off during this operation.

Drain compartments and allow clutches to dry for short time (over-night); install brake adjuster covers. Adjust steering and brakes; refer to "STEERING AND BRAKE LINKAGE ADJUSTMENTS". Operate tractor in low gear with light load until clutches are thoroughly dry.

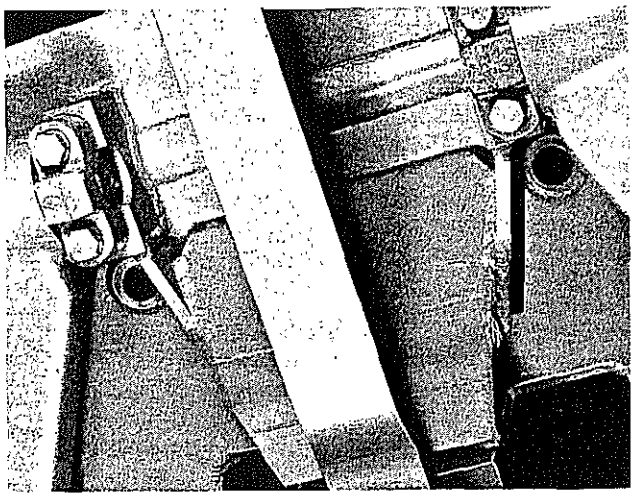

Fig. 4 -- Steering Clutch Compartment Drains (T-11833)

TOPIC 5—BRAKE BANDS

A. DESCRIPTION

Brake bands on following listed tractors may be removed for replacement or repair without removing steering clutches.

HD6A (Prior to S/N 18540)
HD6B (Prior to S/N 18540)
HD6E (All)
HD6G (Prior to S/N 18540)
HD11 (All)

Effective S/N 18540 on HD6A, B and G tractors, brake bands are wider and CANNOT be removed without removing steering clutches; refer to "STEERING CLUTCHES AND BRAKES" for removal of steering clutches.

B. REMOVAL

1. Remove seat cushion and tool box; HD6 - also disconnect fuel lines.

2. Remove band support , Fig. 5, and compartment cover.

3. Turn band adjuster counter-clockwise until loose from adjusting yoke.

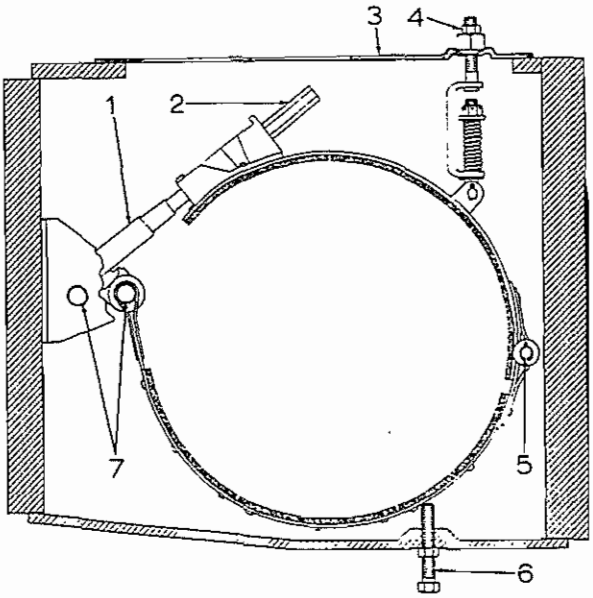

Fig. 5 -- Typical Steering Brake
(T-71905)

1. Yoke (adjusting)
2. Adjuster
3. Cover
4. Band support (HD11)
5. Hinge pin
6. Band support (HD6)
7. End pins

4. Remove pipe plugs from side of final drive housing, Fig. 6 or 7; insert long capscrew through hole and into tapped end pin; pull pin and remove adjusting yoke (remove both end pins, Fig. 5 (7) same way).

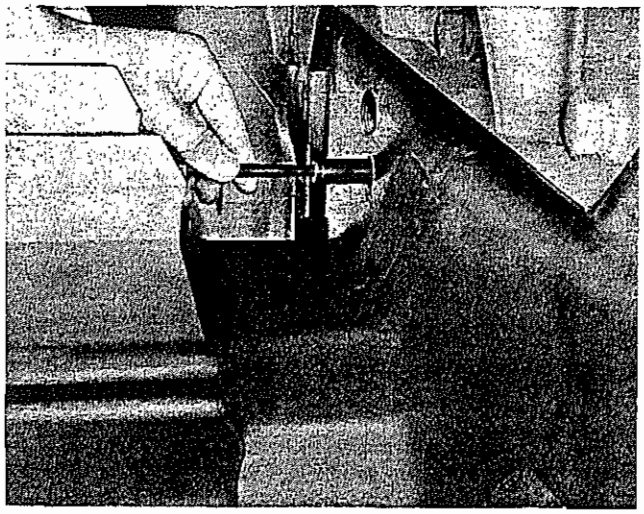

Fig. 6 -- HD6 End Pin Removal
(T-17863)

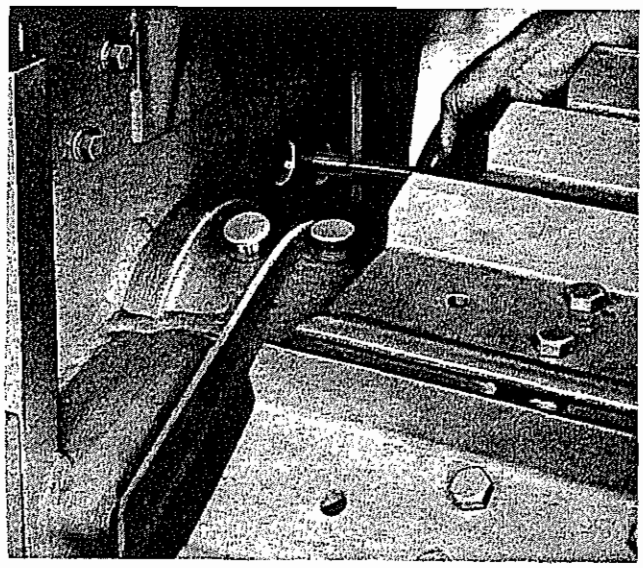

Fig. 7 -- HD11 End Pin Removal
(T-12123)

5. Turn top band section forward on drum and remove hinge pin, Fig. 5 (5); remove top band section, Fig. 8, and then bottom band section.

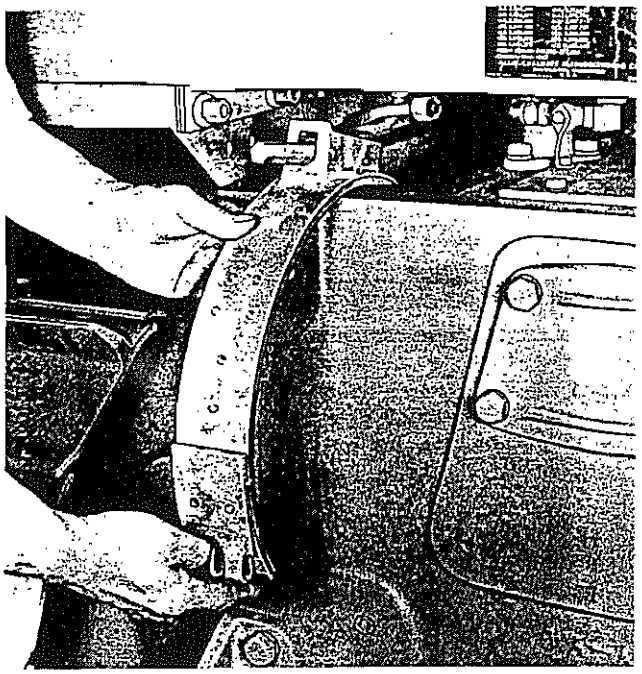

Fig. 8 -- Removing Top Band Section
(HD6 Shown, HD11 Similar)
(T-18036)

C. INSPECTION

1. Replace brake linings before worn to allow rivets to contact brake drum.

2. Replace brake drum if worn, scored, or grooved excessively; refer to "STEERING CLUTCHES AND BRAKES" to remove brake drum.

3. Replace brake bands if worn excessively or damaged.

4. Replace any pin, yoke, or adjuster component worn excessively or damaged.

5. Operate brake pedal; inspect pedal shaft, bell-cranks, levers, rods, (including bushings) for looseness and excessive wear; replace parts as necessary.

D. INSTALLATION

1. Lubricate all pins and bushings SPARINGLY as each is assembled and/or installed.

2. Place brake band sections on brake drum and check for roundness; form sections around drum with soft hammer if necessary before installation.

3. Install brakes by direct reversal of removal procedure.

4. Adjust brakes; refer to "STEERING AND BRAKE LINKAGE ADJUSTMENTS" for complete information.

TOPIC 6—STEERING CLUTCHES AND BRAKES

A. DESCRIPTION

Steering clutches are located at each end of bevel gear shaft and attached to driving hubs; brake drums enclose steering clutches and are attached to hubs on final drive pinion shaft. Steering clutches consist of hub, friction plates, pressure plates, throwout plate, and heavy springs to hold plates in engaged (driving) position. Operation of steering linkage disengages clutch to steer tractor.

Brakes are located around brake drums that enclose steering clutches. Brakes consist of a two section band and lining assembly, drum, band adjuster, band support, and operating linkage. Operation of brake linkage tightens band sections around drum and stops rotation of drum and final drive to stop and/or steer tractor; brakes are used in conjunction with steering clutches to steer tractor.

B. REMOVAL

1. Remove fuel tank:

   a. HD6; remove arm rests and capscrews (inside each battery box) attaching tank to battery boxes.

      HD11; remove seat and back cushions, and battery cable clip from tank.

   b. Close fuel shut-off valve and disconnect fuel lines to tank.

   c. Remove capscrews attaching battery boxes and rear fenders to tank; remove tank; keep tank shims separated so they may be re-installed in original positions.

2. Remove battery ground cable from final drive housing and tape end of cable. Remove bolts attaching battery box to fender and move box outward on fender to provide clearance for steering clutch removal.

3. Remove band support screw (HD6), or jam nut and band support nut (HD11); refer to Fig. 5.

4. Remove clutch compartment cover. Turn band adjuster counterclockwise until loosened from band adjusting yoke.

5. Remove pipe plugs located on side of final drive housing, Fig. 6 or 7, and insert long capscrew through proper hole; turn capscrew into yoke end pin and remove pin; remove adjusting yoke, Fig. 5. Remove end pin securing bottom band section by same method. Do not remove brake bands.

6. Remove capscrews attaching brake drum hub to brake drum, and clutch assembly to clutch driving hub.

NOTE

Late model tractors use self locking place bolts, rather than capscrews and lockwashers, to retain hubs.

Clutch assembly and brake drum will have to be rotated to remove capscrews; use jack under track shoe grouser to move tractor, or turn track sprocket with heavy bar.

7. Attach chain to brake band, as shown in Fig. 9, and lift clutch and brake drum assembly from steering clutch compartment.

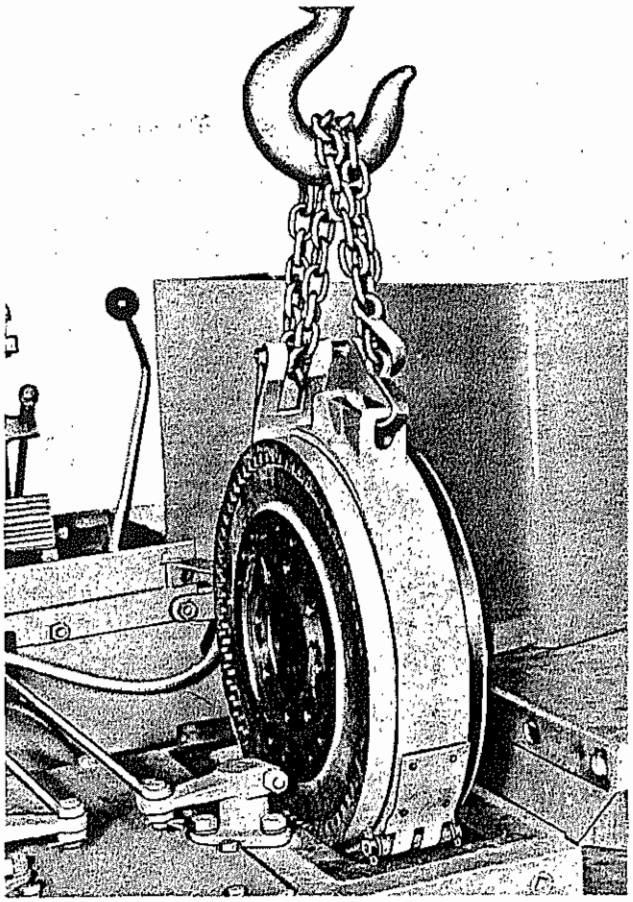

Fig. 9 -- Removing Steering Clutch
(HD6 shown - HD11 similar)
(T-17864)

C. DISASSEMBLY

1. Remove brake drum from clutch assembly; center punch or mark pressure plate, clutch hub, and throwout plate so they will be reassembled in same positions.

2. Remove lock wires from drilled head capscrews. Refer to Figs. 10 and 11 and position

throwout plate of steering clutch assembly on backing plate. Turn short threaded end of forcing screw into backing plate securely. Install tube over forcing screw and down on to clutch hub; place tube end plate on top of tube.

3. Install hydraulic ram (with plain head insert) on forcing screw so ram head contacts tube end plate; turn speed nut on to contact ram base. Connect hydraulic pump to ram.

4. Operate hydraulic pump until tension is taken off throwout plate capscrews; remove capscrews, slowly release pressure from hydraulic ram allowing assembly to separate until all tension is off of steering clutch pressure springs. Remove service tools.

5. Remove pressure plate, steel and friction plates, back plate (if used), hub, pressure springs (and spring washers, if any), and spacers from throwout plate (refer to Fig. 12 or 13).

D. INSPECTION

1. BRAKES

   a. Replace brake linings before worn to allow rivets to contact brake drum.

   b. Replace brake drum if worn, scored, or grooved excessively.

   c. Replace brake bands if worn excessively or damaged.

   d. Replace any pin, yoke, or adjuster component worn excessively or damaged.

   e. Operate brake pedal; inspect pedal shaft,

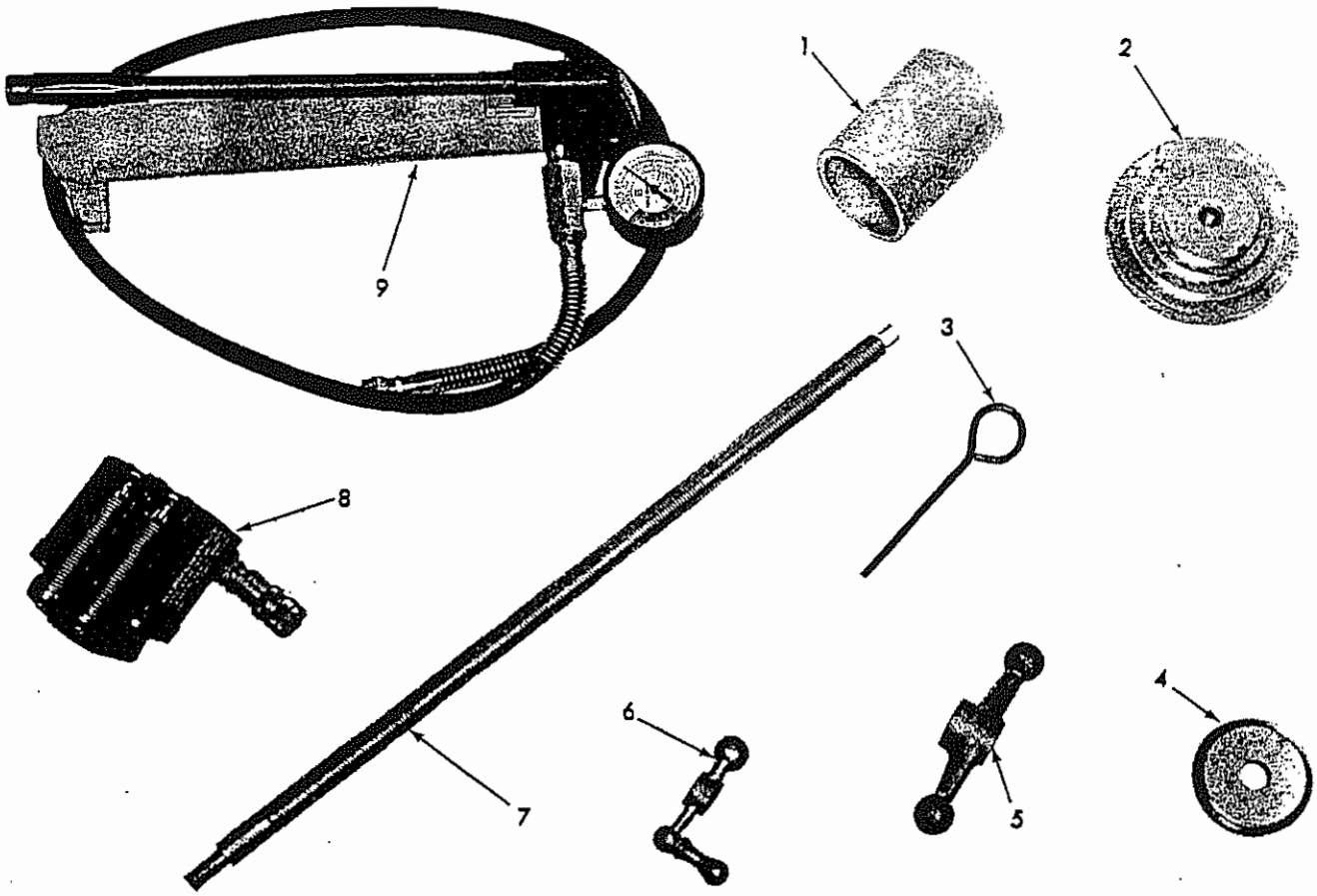

Fig. 10 -- Service Tools (AC-300 Steering Clutch Set) For Disassembling and Assembling Steering Clutches (T-20865)

1. Tube
2. Backing plate
3. Pin
4. Tube end plate
5. Speed nut
6. Crank
7. Forcing screw
*8. Hydraulic ram (Y15-A), with plain insert (Y15-2D)
*9. Hydraulic pump (Y21-A)

* These items are not included in AC-300 set

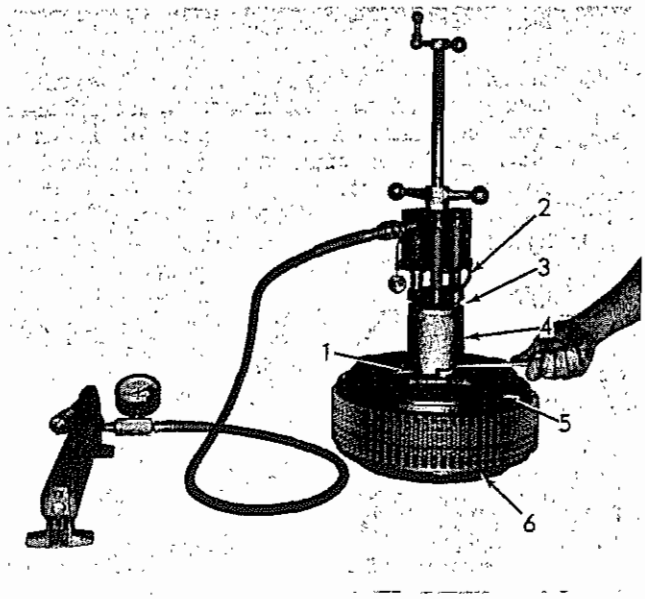

Fig. 11 -- Compressing Pressure Springs (T-22037)

1. Throwout plate capscrews
2. Pin
3. Tube end plate
4. Tube
5. Pressure plate
6. Backing plate (under throwout plate)

bellcranks, levers, rods, (including bushings) for looseness and excessive wear; replace parts as necessary.

2. STEERING CLUTCHES

a. Steel plates - Specified thickness of new plate is .084" - .096", replace any plate not flat within .015", or if scored or worn to measure less than .072".

b. Friction plates (HD6 (Prior to S/N 13993) - Specified thickness of new plate is .182" - 187"; replace any plate not flat within .015", or if scored or worn to measure less than .150". Inspect teeth of plate for damage and friction surfaces for oil saturation.

HD6 (eff. S/N 13993 and up) and HD11 - Specified thickness of new plate is .152" - .157"; replace any plate not flat within .015", or if scored or worn to measure less than .125". Inspect teeth of plate for damage and friction surfaces for oil saturation.

c. Tapered friction plates

Two tapered friction plates are used in each clutch in HD6 (Eff. S/N 13993), and in HD11 (Eff. S/N 3998).

Specified thickness of new tapered plate at thickest side (at omitted tooth location) is .172" - .177"; at thinnest side (180° from omitted tooth location) it is .142" - .147". Replace any tapered plate scored or worn to measure less than .145" (thick side) - .115" (thin side). Inspect teeth of plate for damage and friction surfaces for oil saturation. Must be flat (each side) within .015".

d. Pressure Springs - Specifications of new springs are:

HD6 (Prior to S/N 13993) - 240 - 260 lbs. @ 2-21/64".

HD6 (Eff. S/N 13993 and up) - 277 - 297 lbs. @ 2-21/64".

HD11 (all) - 335 - 365 lbs. @ 3-11/16".

Replace any spring not reasonably close to specifications.

NOTE

Install complete set of stronger HD6 springs if replacing a quantity of springs on HD6 tractor prior to S/N 13993.

e. Pressure Plate - Inspect friction surface of plate; new plate has .000" - .005" (.005" max.) taper from O.D. to I.D. on friction surface. Replace plate if scored, or excessively worn.

f. Back Plate - HD11 only - Specified thickness of new plate is .375": Replace plate if not flat within .015", or if scored or worn to measure less than .350".

g. Hub - Replace hub if friction surface is scored, shows indication of excessive wear, or not flat within .010"; replace hub if splines are not smooth (heavy grooving on splines will cause teeth of steel plates to bind resulting in poor clutch disengagement).

h. Steering Linkage - Operate steering control levers; inspect pins, bushings, yokes, levers, etc. for excessive wear or damage; replace any worn or damaged parts.

E. ASSEMBLY

Quantity of plates in each clutch in HD6 tractors (prior to S/N 13993) is 10 steel and 10 friction. Effective with HD6 S/N 13993 quantity of plates in each clutch is increased to 12 steel and 12 friction; two of the 12 friction plates are tapered.

Quantity of plates in each clutch in HD11 tractors is 17 steel and 17 friction. Effective S/N 3998, two of the 17 friction plates are tapered.

NOTE

Install new type plates in HD6 (prior to S/N 13993) or HD11 (prior to S/N 3998) steering clutches when rebuilding clutches and a quantity of plates require replacement.

Assemble steering clutches as follows:

1. Refer to Fig. 12 or 13, and place hub (flange down) on work bench; install back plate (HD11 only, HD6 does not use back plate).

2. Stack plates, beginning with a friction, alternately on hub; tapered friction plates (if used) must be installed in No. 3 and No. 6 friction plate positions with omitted tooth spaces located 180° apart.

3. Refer to Fig. 14 and check stack height (meas-

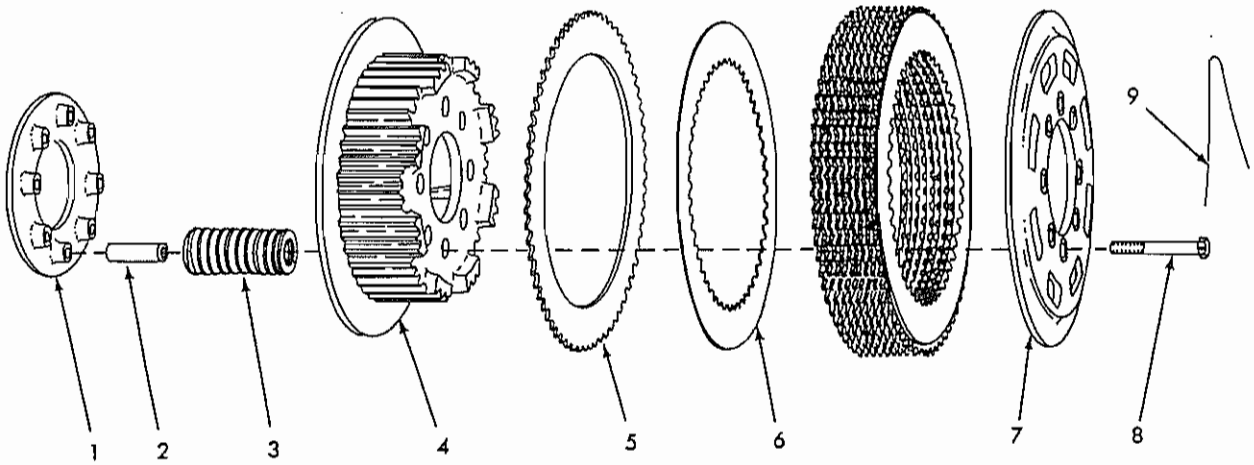

Fig. 12 -- HD6 Steering Clutch Parts
(T-38209)

1. Plate (throwout)
2. Spacer
3. Spring
4. Hub
5. Plate (friction)
6. Plate (steel)
7. Plate (pressure)
8. Capscrew
9. Lockwire

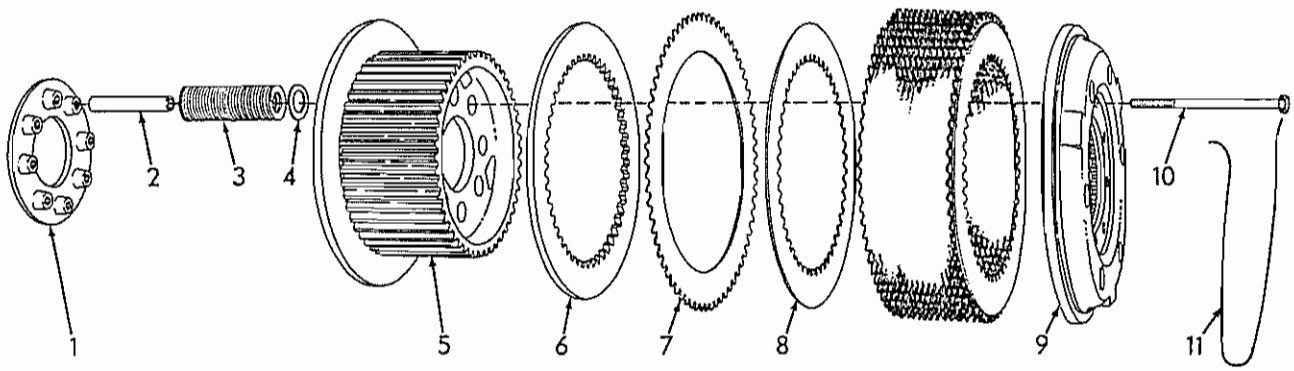

Fig. 13 -- HD11 Steering Clutch Parts
(T-5113)

1. Plate (throwout)
2. Spacer
3. Spring
4. Washer
5. Hub
6. Plate (back)
7. Plate (friction)
8. Plate (steel)
9. Plate (pressure)
10. Capscrew
11. Lockwire

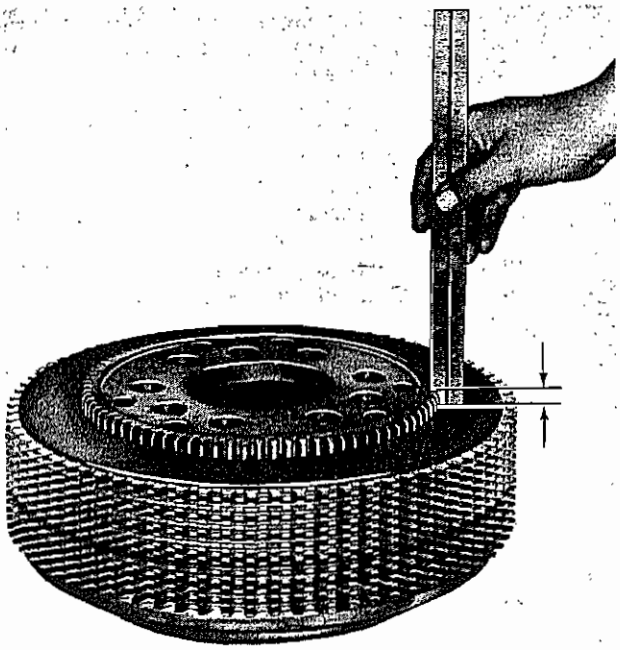

Fig. 14 -- Checking Stack Height (HD16 Shown, HD6, 11 Similar) (T-22038)

ure distance from top steel plate to top surface of hub). Specified dimension for HD6 is 3/8" + or - 1/16"; specified dimension for HD11 is 9/16" + or - 1/16". Add or remove steel plates at top of stack to obtain specified dimension. At least one steel plate must be used next to pressure plate.

4. Remove all plates from hub, keep plates in their proper positions; place tool backing plate, Fig. 10 (2) on work bench; refer to Fig. 12 or 13 and position throwout plate on tool backing plate with spring bosses up.

5. Position brake drum over throwout plate with final drive side of drum down; refer to Fig. 15 and support drum with blocks to keep drum approximately level with throwout plate.

6. Refer to Fig. 12 or 13 and install springs over bosses of throwout plate; insert spacer in each spring; place spring washer (HD11 only) on top of each spring.

7. Align marks (placed at disassembly) on throwout plate and hub and carefully install hub down in position over springs; be certain each spring is properly seated in hub.

8. Install two aligning studs through spacers and into throwout plate. Lubricate splines of hub sparingly with a graphite base grease and install clutch plate stack on hub. Be certain tapered friction plates are in proper positions, (as explained in a previous step).

9. Align marks (placed at disassembly) on clutch

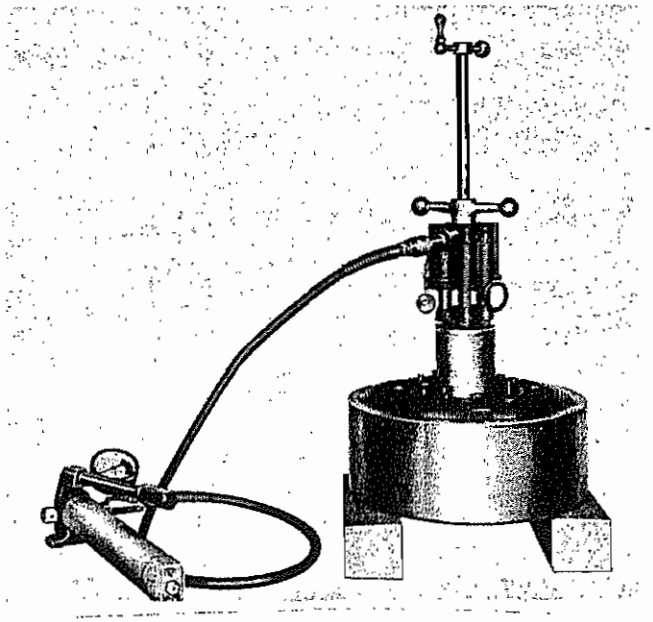

Fig. 15 -- Compressing Pressure Springs To Install Throwout Plate Capscrews (T-22039)

hub and pressure plate and install pressure plate. Refer to Figs. 10 and 15 and place tube through center of pressure plate and down against hub. Insert forcing screw through tube and down into tool backing plate; turn screw securely into backing plate. Install tube end plate, hydraulic ram (with plain insert), and speed nut.

10. Connect pump to ram and install pin in forcing screw as shown in Fig. 15. Operate pump to compress springs.

11. Install six throwout plate capscrews and tighten evenly; remove aligning studs and install remaining two capscrews. Torque all capscrews evenly to 60-75 lbs. ft.

NOTE

Throwout plate capscrews are special capscrews designed for this particular application; standard capscrews must never be substituted.

12. Release hydraulic pressure slowly and remove service tools; remove clutch assembly from brake drum.

13. Refer to Fig. 16 and measure distance (stand-in) between machined face of clutch hub and face of throwout plate.

14. Specified distance (stand-in) for HD6 is 3/16" + or - 1/16"; specified distance (stand-in) for HD11 is 7/32" + or - 1/16". If measured distance (stand-in) is less than minimum specification, pressure plate friction surface is excessively worn, hub friction surface is ex-

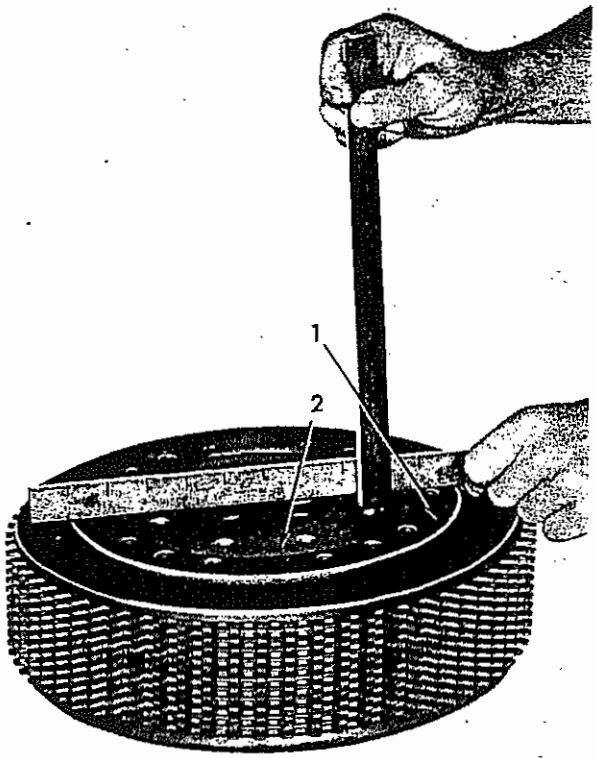

Fig. 16 -- Measuring Distance From Clutch Hub To Throwout Plate (HD7G Shown, HD6, 11 Similar) (T-36845)

1. Clutch Hub (machined surface)
2. Throwout Plate (machined surface)

cessively worn (or combination of both), stack height, Fig. 14, was measured wrong, or clutch was assembled wrong. In this case, disassemble clutch and inspect; if clutch was assembled correctly and stack height is within specifications, and pressure plate and hub friction surfaces seem OK to use, ADD one steel plate next to pressure plate and re-assemble. If measured distance (stand-in) is more than specified maximum distance, remove one steel plate from next to pressure plate (at least one steel plate must be used next to pressure plate).

15. Lockwire each two throwout plate capscrews; use new lockwires. Position clutch assembly in brake drum.

F. INSTALLATION

1. Install steering clutches and brakes by direct reversal of removal procedure. Torque clutch and brake driving hub attaching capscrews to 90-100 lbs. ft.

2. Lubricate all pins and bushings SPARINGLY as each is assembled and/or installed.

3. Adjust steering and brake controls; refer to "STEERING AND BRAKE LINKAGE ADJUSTMENTS" for complete procedure.

TOPIC 7—STEERING CLUTCH THROWOUT ASSEMBLIES

A. DESCRIPTION

Steering clutch throwout assembly is located on each steering clutch driving hub; each assembly consists of throwout sleeve, bearing, bearing cage, and yoke.

Operation of steering controls actuates yoke attached to bearing cage; throwout bearing is a press fit in cage and throwout sleeve is press fit in bearing. Sleeve has sliding fit over and is carried by, steering clutch driving hub. Sleeve is pressed against steering clutch throwout plate to disengage steering clutch when steering controls are operated.

B. REMOVAL AND DISASSEMBLY

1. Remove steering clutch and brake (refer to "STEERING CLUTCHES AND BRAKES".

2. Refer to Fig. 17 and disconnect upper end of throwout bearing lubricating hose. Loosen driving hub retaining capscrew and turn it out approximately 1/4". Use tools similar to those shown in Fig. 18 and pull hub from bevel gear shaft. Remove tools, hub retaining capscrew, capscrew lock and hub retaining washer.

3. Remove driving hub, throwout sleeve, bearing and bearing cage, and throwout yoke as an assembly. DO NOT REMOVE YOKE ACTUATING LEVER. If lever must be removed, punch mark lever and shaft, and be certain to reinstall in same position.

4. Remove driving hub from sleeve, lubricating hose and yoke from bearing cage (refer to Fig. 17).

5. Use suitable tools and press throwout sleeve from bearing, and bearing from bearing cage.

C. INSPECTION

Wash all parts with solvent and inspect as follows:

1. Throwout yoke, wear pin, trunnion pin, and ball should be checked for excessive wear or damage; replace parts as necessary; (also check bushing in actuating lever. Replace if loose on yoke ball.)

2. Bearing cage and pivot bushings should be checked for wear and damage; replace parts as necessary. Wash all old lubricant from bearing cage.

3. Throwout bearing should be replaced if loose or damaged. Bearing should have .000"-.0015" tight fit in cage, and sleeve should have .000" - .0015" tight fit in bearing.

4. Throwout sleeve should be replaced if excessively worn or damaged.

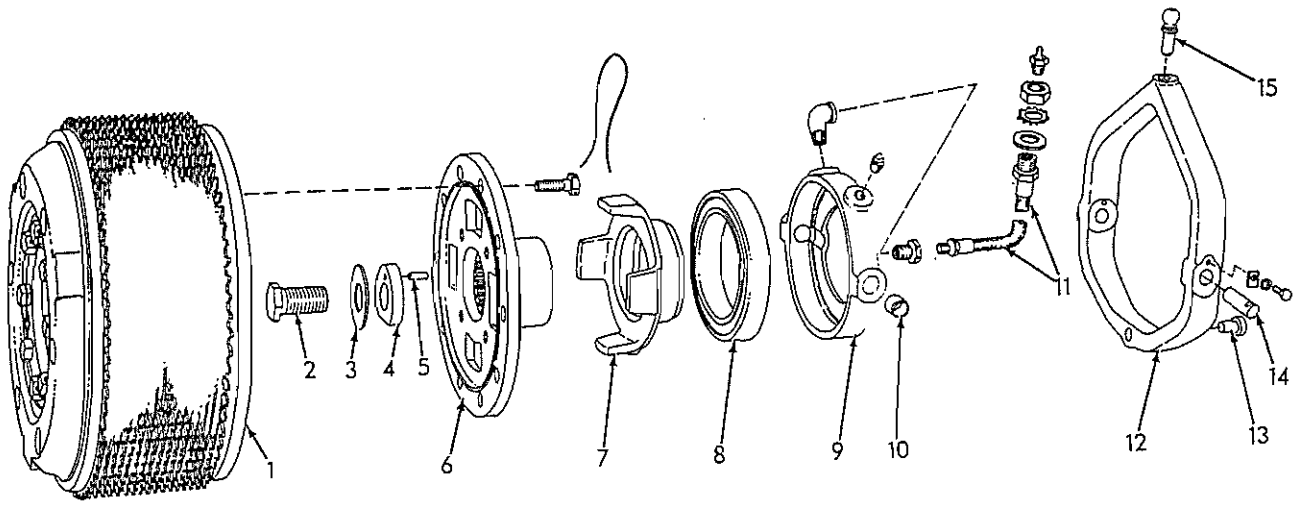

Fig. 17 -- Clutch Throwout Parts (HD11 Shown, HD6 Similar)
(T-5113)

1. Steering clutch assy.
2. Capscrew (hub retaining)
3. Lock
4. Washer (hub retaining)
5. Dowel pin
6. Hub (clutch driving)
7. Sleeve (throwout)
8. Bearing
9. Cage (bearing)
10. Bushing (pivot)
11. Hose
12. Yoke (throwout)
13. Wear pin
14. Trunnion pin
15. Ball

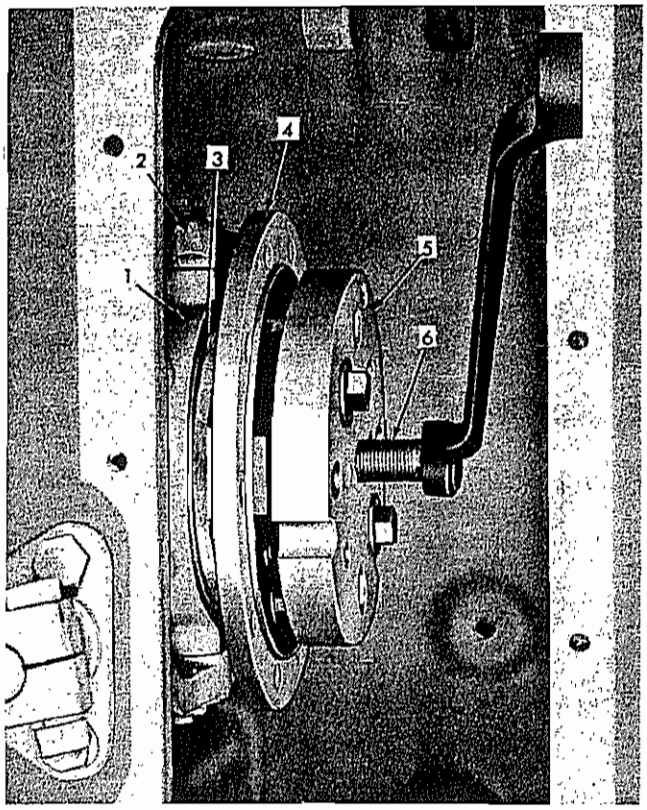

Fig. 18 -- Pulling Steering Clutch Driving Hub (HD6 Shown, HD11 Similar) (T-17878)

1. Cage (bearing)
2. Yoke (throwout)
3. Sleeve (throwout)
4. Hub (clutch driving)
5. Puller plate
6. Puller screw

5. Clutch driving hub should be checked for damage to splines, and to face of clutch mounting flange: repair or replace hub if necessary.

6. Lubricating hose and fittings should be inspected for leaks and cleaned internally. Early model tractors used an oiling wick arrangement to accumulate oil from bevel gear compartment for lubrication of throwout bearing. Early HD6 tractors have wick located in upper end of lubricating hose; wick should be replaced (if hardened) by attaching fine wire to new wick and pulling wire and wick through hose until approximately 1/2" of wick protrudes from upper end of hose. DO NOT ATTEMPT TO TWIST WICK INTO PLACE, or function of wick will be impaired. Saturate wick completely with light oil before installing hose.

   Early HD11 tractors have two wicks located in wick holder in bevel gear compartment; replace wick by removing wick holder; remove old wicks and work a new lower wick (small) into holder until approximately 5/16" of wick protrudes from bottom of holder. AVOID TWISTING WICK. Push upper wick (large) down into holder so it "bottoms" in holder; saturate wicks completely with light oil and re-install wick holder; tighten holder securely and lock in position with holder lock.

D. ASSEMBLY AND INSTALLATION

1. Use suitable tools and press throwout bearing into cage and throwout sleeve into bearing. Bearing on models with wick type oiling should be lubricated with bevel gear compartment oil poured through bearing cage.

2. Assemble lubricating hose and yoke to cage assembly (refer to Fig. 17); be certain yoke trunnion pins are locked securely in position.

3. Lubricate throwout bearing (models with grease fittings only) through lubricating hose with pressure gun lubricant.

4. Lubricate inside diameter of throwout sleeve with graphite base lubricant and position steering clutch driving hub in sleeve (refer to Fig. 17).

5. Install driving hub, sleeve, bearing cage, and yoke as an assembly on bevel gear shaft; be certain ball at top of yoke is inserted into actuating lever as assembly is installed.

6. Install hub retaining washer, lock, and hub retaining capscrew; torque capscrew to 300 lbs. ft. Lock capscrew by bending one edge of lock over capscrew head and another edge of lock over retaining washer.

7. Connect upper end of lubricating hose.

8. Install steering clutch and brake; refer to STEERING CLUTCHES AND BRAKES".

9. Adjust steering and brake controls; refer to "STEERING AND BRAKE LINKAGE ADJUSTMENTS" for complete procedure.

TOPIC 8—STEERING AND BRAKE LINKAGE ADJUSTMENTS

A. DESCRIPTION (ALL MODELS)

Steering and brake control linkage must be correctly adjusted to obtain proper operation; linkage adjustments should be checked and adjusted as necessary after any work has been done to steering and/or brake components. Steering linkage on HD6 is straight mechanical linkage; HD11 (prior to S/N 6069) steering linkage has spring loaded mechanical boosters with "over-center" action. Effective S/N 6069, HD11 steering linkage is hydraulic boosted by a "follow-up" type control valve and hydraulic system (refer to "STEERING HYDRAULIC SYSTEM" for detailed information and description of system).

Brake linkage on all models of HD6 and HD11 tractors covered by this manual is straight mechanical linkage with parking brake lock levers used to hold brakes in applied position when desired.

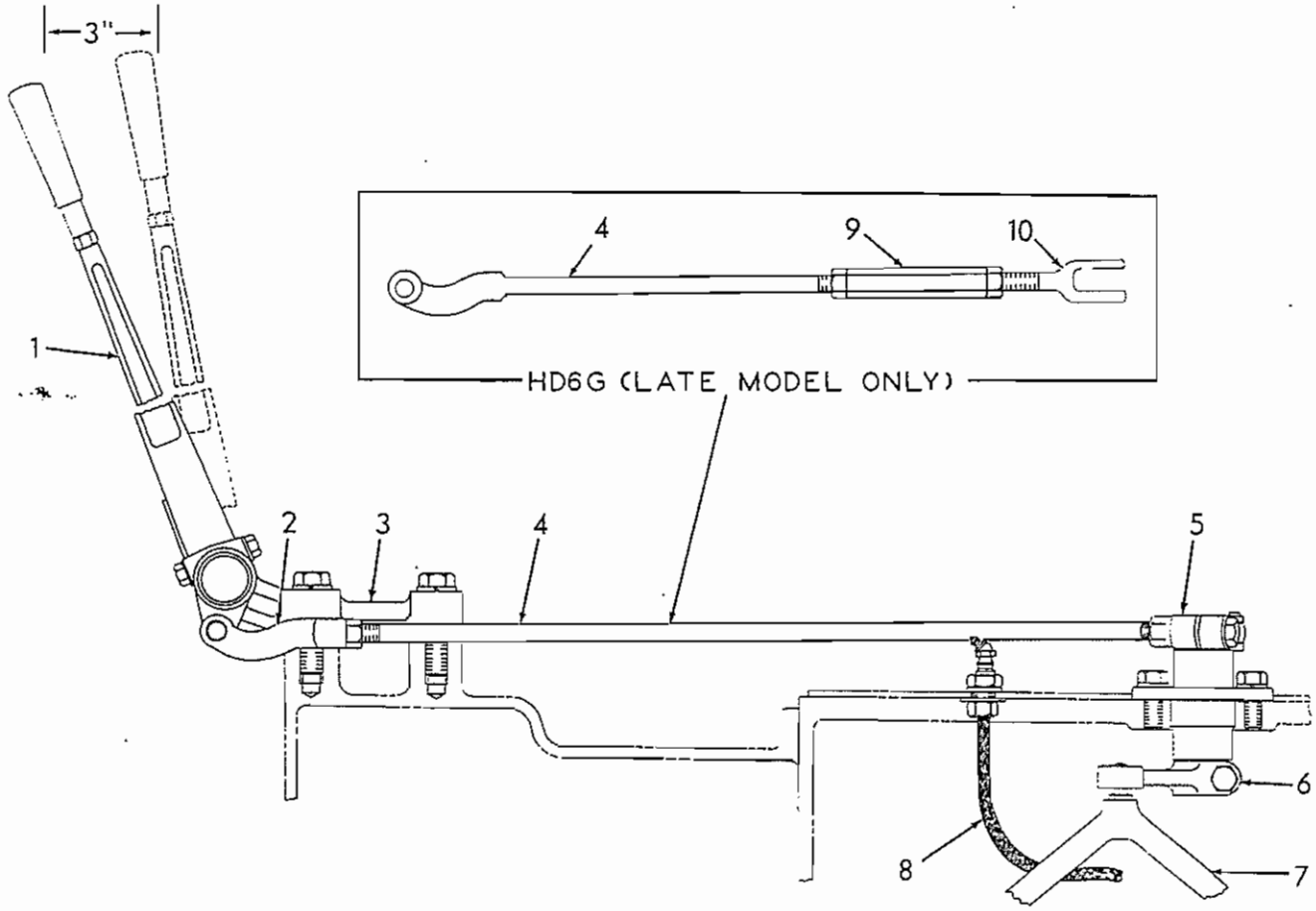

Fig. 19 -- HD6 Steering Control Linkage
(T-72035)

1. Lever (steering)
2. Yoke (front)
3. Bracket (mounting)
4. Rod (control)
5. Actuating lever (upper)
6. Actuating lever (lower)
7. Yoke (throwout)
8. Hose (lubricating)
*9. Nut (adjusting)
*10. Yoke (rear)

*HD6G (late model only)

B. HD6 ADJUSTMENTS

1. STEERING LINKAGE

Refer to Fig. 19 and adjust length of steering control rod (4) to obtain 3" free travel at top of steering lever (1); adjust length of rod by turning front yoke (2) or on HD6G-late models only, by turning adjusting nut (9). Subsequent adjustments should be made when free travel has diminished to 1". When all adjustment in control rod (4) has been used, and free travel has diminished to 1", steering clutches need rebuilding.

2. BRAKE LINKAGE

a. Refer to Fig. 20 and adjust length of brake control rod (9) to obtain DIM. "A" (1/16" - 1/4") floor plate to brake lever clearance.

b. Remove band adjuster cover and turn adjuster (5) to obtain DIM. "B" 1-3/4" - 2"; HD6G 2" - 2-1/4" (brake lever free travel).

c. Loosen jam nut on support screw (8) and turn screw until band contacts brake drum; loosen support screw 1/2 turn and tighten jam nut.

C. HD11 ADJUSTMENTS

1. STEERING LINKAGE

a. HD11 (Prior to S/N 6069)

Refer to Fig. 21 and adjust length of steering control rod (4) to obtain 3" free travel at top of steering lever (1); adjust length of rod by turning front yoke (2). Subsequent adjustments should be made when free travel diminishes to 1". When all adjustment in control rod (4) has been used, and free travel has diminished to 1", steering clutches need rebuilding. Adjust booster eye (9) to obtain proper "over-center" action.

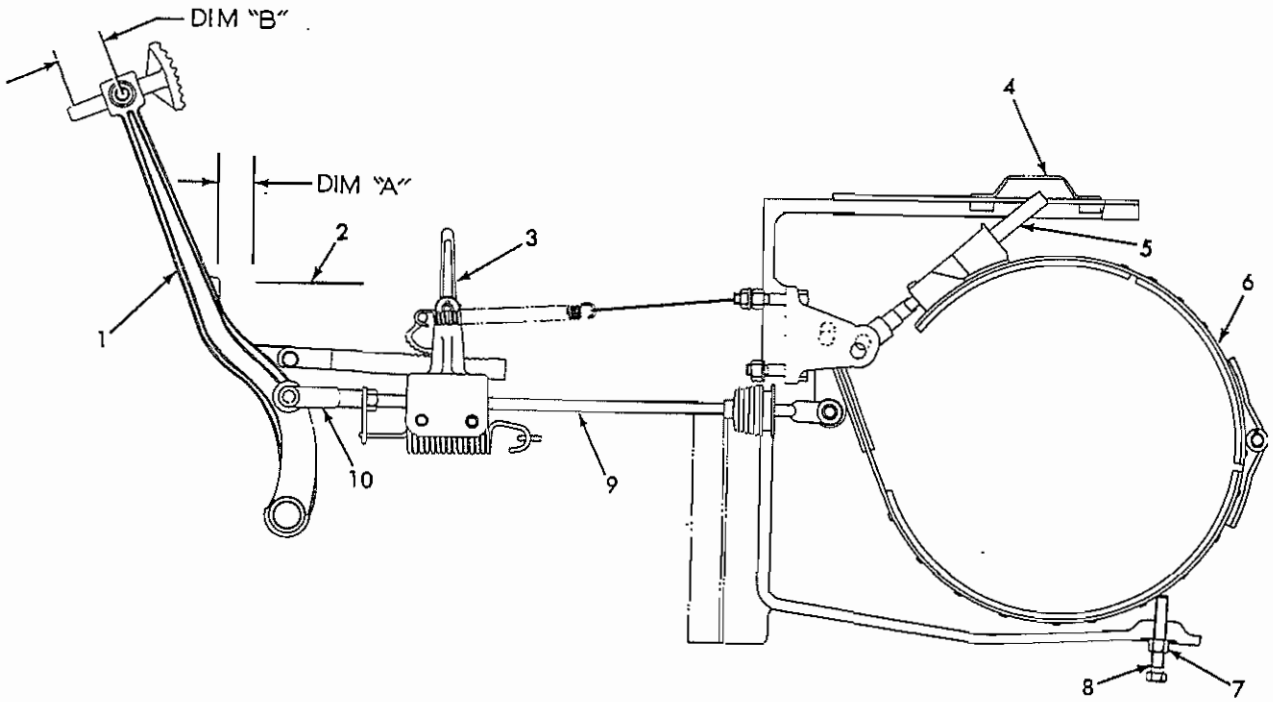

Fig. 20 -- HD6 Brake Control Linkage, HD6G Similar (T-13377)

1. Lever (brake)
2. Plate (floor)
3. Lever (parking brake)
4. Cover (adjuster)
5. Adjuster (brake band)
6. Band assy.
7. Jam nut
8. Support screw
9. Rod (control)
10. Yoke (adjusting)

DIM. "A" - 1/16" - 1/4" (floor plate - to brake lever clearance).

DIM. "B" - 1-3/4" - 2"; HD6G 2" - 2-1/4" (brake lever free travel)

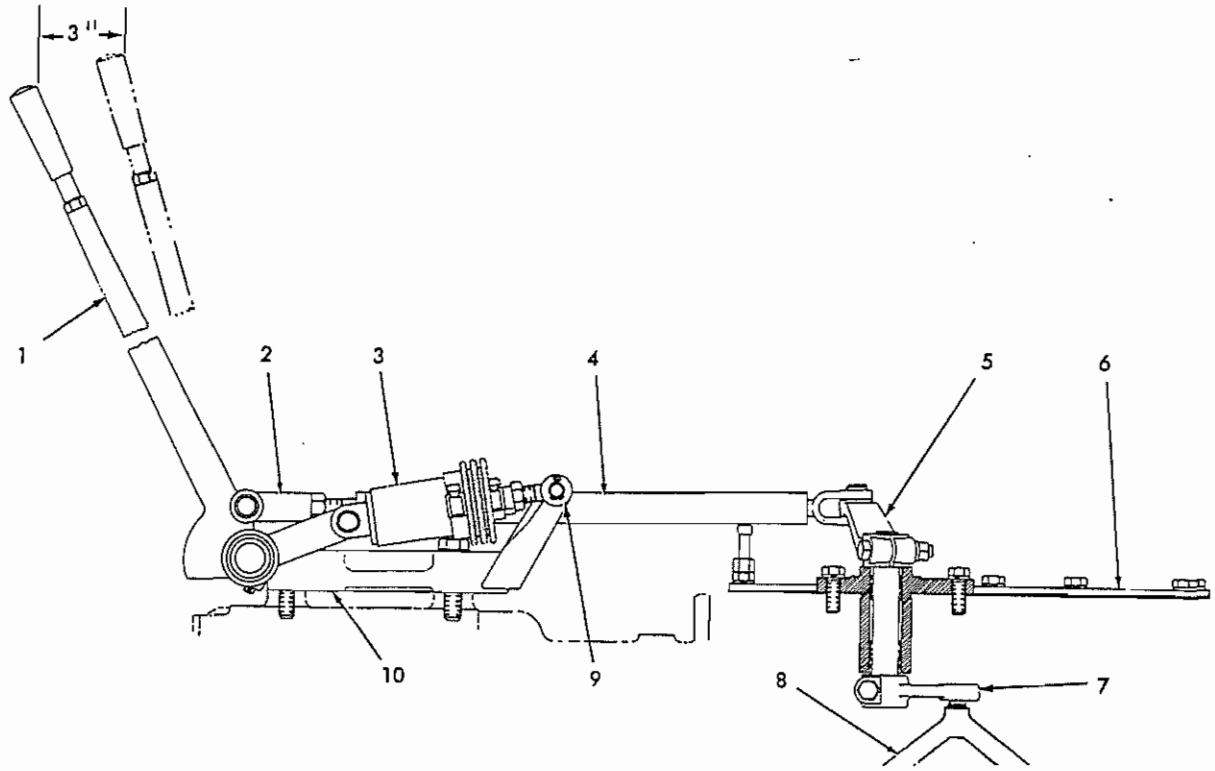

Fig. 21 -- HD11 (Prior To S/N 6069) Steering Control Linkage (T-20259)

1. Lever (steering)
2. Yoke (front)
3. Booster (spring loaded)
4. Rod (control)
5. Actuating lever (upper)
6. Cover (bevel gear compartment)
7. Actuating lever (lower)
8. Yoke (throwout)
9. Eye (booster adjusting)
10. Bracket (mounting)

b. HD11 (S/N 6069 - 10000)

Refer to Fig. 22 and push spool valve (11) solidly against piston in control valve (14); be certain spool and piston are pushed to rear as far as possible, to take all "slack" out of actuating lever (16) and throwout yoke (17).

Measure distance from front machined surface of control valve (14) to center of hole in front end of spool valve (11); this measurement must be 8-15/16" + or - 7/16" (refer to Fig. 22, DIM. "A").

Adjust position of actuating lever (16) on actuating shaft (15) to obtain specified DIM. "A"; refer to STEERING CONTROL VALVE" (Installation) for correct procedure.

Refer to Fig. 22; hold spool against piston and connect control rod (8) to spool (11); adjust length of control rod by turning adjusting nut (9) to obtain DIM. "B" (1-1/16" + or - 1/32") from center of yoke pin to pin seat stop in bracket (7).

Hold control rod to maintain DIM. "B" (spool is against piston); adjust length of vertical rod by turning adjusting yoke (5) to obtain DIM "C" (1-7/8" - free travel) at top of steering levers (2). Install and tighten boot (12) to spool with steering controls in released position.

IMPORTANT

Subsequent adjustments for free travel (DIM. "C") should be made when free travel diminishes to 1", subsequent free travel adjustments are made by turning adjusting nut, Fig. 22 (9) to shorten control rod (8).

When all adjustment in control rod has been used, and free travel has diminished to 1", steering clutches need rebuilding.

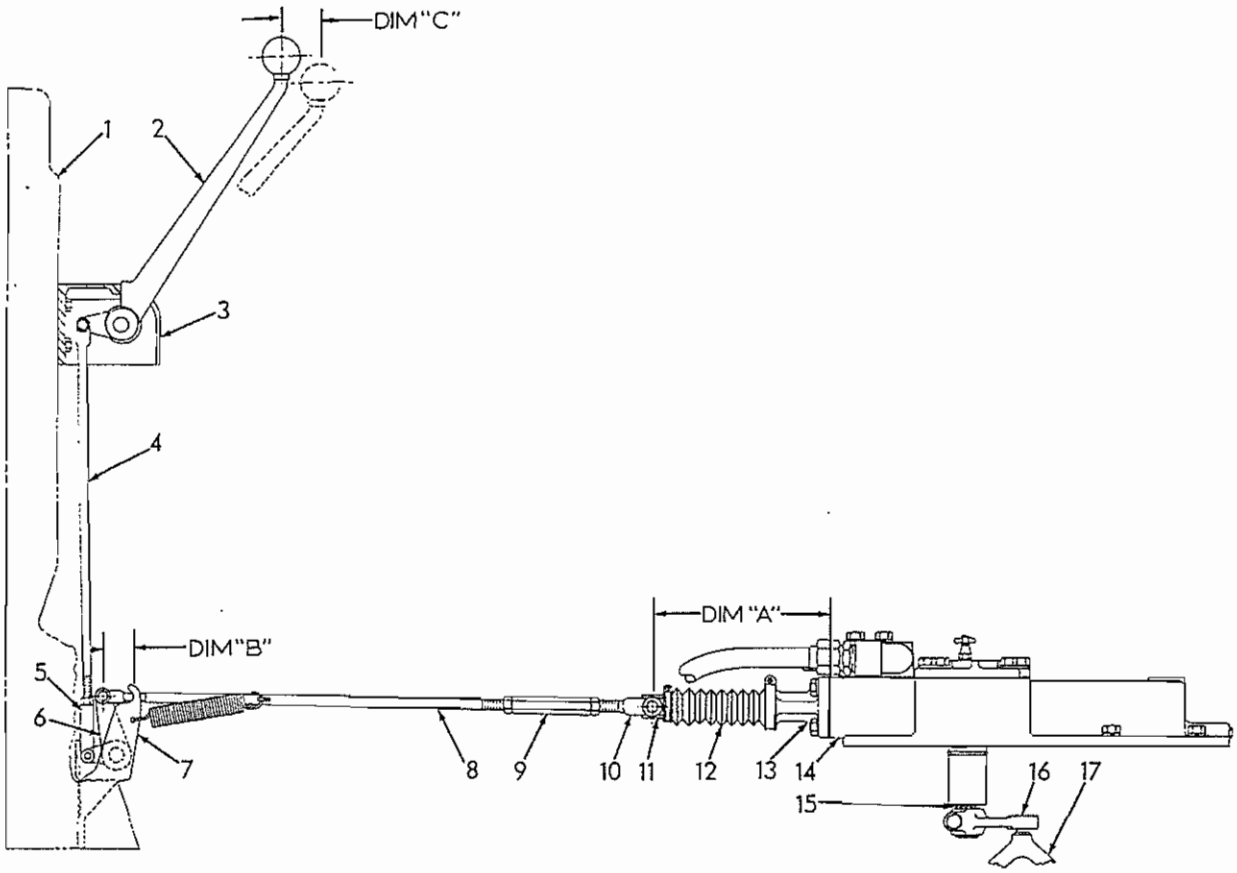

Fig. 22 -- HD11 (S/N 6069 - 10000) Steering Control Linkage
(T-72036)

1. Cowl
2. Lever (steering)
3. Bracket (steering lever)
4. Rod (vertical)
5. Yoke (adjusting)
6. Lever assy. (control)
7. Bracket (control lever)
8. Rod (control)
9. Nut (adjusting)
10. Yoke (control rod)
11. Spool valve
12. Boot (spool)
13. Bracket (spool)
14. Control valve
15. Shaft (actuating)
16. Lever (actuating)
17. Yoke (throwout)

DIM. "A" 8-15/16" + or - 7/16"
DIM. "B" 1-1/16" + or - 1/32"
DIM. "C" 1-7/8" (free travel)

c. HD11B (Eff. S/N. 10001)

Refer to Fig. 23 and push spool valve (12) solidly against piston in control valve (15); be certain spool and piston are pushed to rear as far as possible, to take all slack out of actuating lever (16) and throwout yoke (18).

Measure distance from front machined face of control valve (15) to center of hole in front end of spool valve (12); this measurement must be 8-15/16" + or - 7/16" (refer to Fig. 23, DIM. "A").

Adjust position of actuating lever (16) on actuating shaft (17) to obtain specified DIM. "A"; refer to "STEERING CONTROL VALVE" (Installation) for correct procedure.

Refer to Fig. 23; hold spool against piston and connect control rod (9) to spool (12); adjust length of control rod by turning adjusting nut (10) to obtain DIM. "B" (1-1/8" + or - 1/32") from center of yoke pin to center of spring attaching hole in bracket (8).

Hold control rod (9) to maintain DIM. "B" (spool is against piston); adjust length of lower vertical rod (5) by turning adjusting

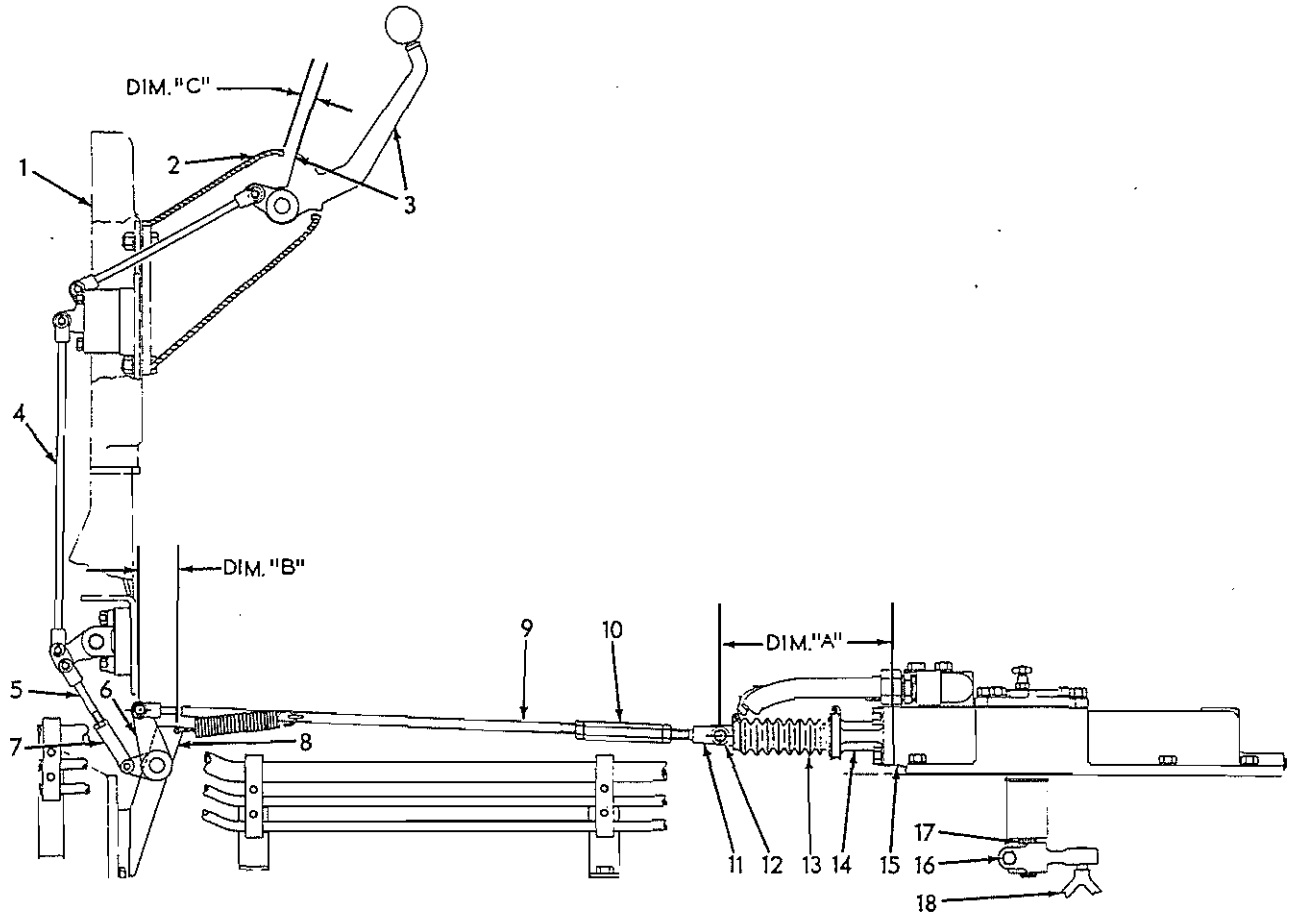

Fig. 23 -- HD11 B (Eff. S/N 10001) Steering Control Linkage (T-41915)

1. Cowl
2. Bracket (steering lever)
3. Lever (steering)
4. Rod (upper vertical)
5. Rod (lower vertical)
6. Lever (control)
7. Yoke (adjusting)
8. Bracket (control lever)
9. Rod (control)
10. Nut (adjusting)
11. Yoke (control rod)
12. Spool valve
13. Boot (spool)
14. Bracket (spool)
15. Control valve
16. Lever (actuating)
17. Shaft (actuating)
18. Yoke (throwout)

DIM. "A" 8-15/16" + or - 7/16"
DIM. "B" 1-1/8" + or - 1/32"
DIM. "C" 1/2" (free travel)

yoke (7) to obtain DIM. "C" (1/2" - free travel) between stop at front of steering lever (3), and bracket (2). Install and tighten boot (13) to spool with steering controls in released position.

IMPORTANT

Subsequent adjustments for free travel (DIM. "C") should be made when free travel diminishes to 1/4"; subsequent free travel adjustments are made by turning adjusting nut, Fig. 23 (10) to shorten control rod (9).

When all adjustment in control rod has been used, and free travel has diminished to 1/4", steering clutches need rebuilding.

2. BRAKE LINKAGE

a. Refer to Fig. 24 and adjust length of brake control rod (5) to obtain DIM. "A" 1/16" (HD11G, GC 1-9/16") floor plate to brake lever clearance.

b. Remove band adjuster cover and turn ad-

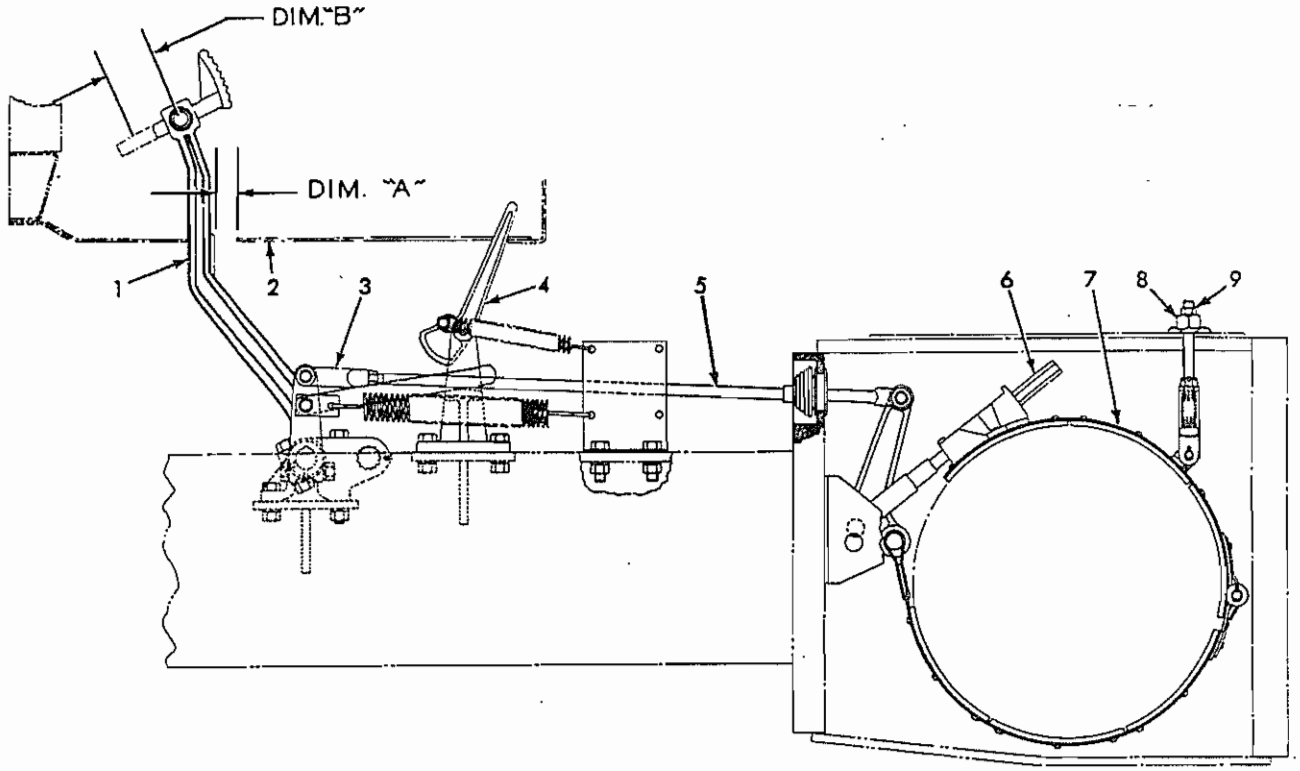

Fig. 24 -- HD11 Brake Linkage
(T-28952)

1. Lever (brake)
2. Plate (floor)
3. Yoke (adjusting)
4. Lever (parking brake)
5. Rod (control)
6. Adjuster (brake band)
7. Band assy.
8. Nut (adjusting)
9. Jam nut
   DIM. "A" 1/16"; HD11G, GC 1-9/16" (floor plate to brake lever clearance).
   DIM. "B" 3" - 3-1/2"; HD11B Eff. S/N 10001 1-3/4" - 2" (brake free travel).

juster (6) to obtain DIM. "B" 3" - 3-1/2" (HD11B Eff. S/N 10001 1-3/4" - 2") brake lever free travel.

c. Loosen jam nut, Fig. 24 (9) and band support adjusting nut (8); tighten adjusting nut until it just contacts its seat, then tighten an additional 1/2 turn; tighten jam nut.

TOPIC 9—FITS AND TOLERANCES

A. HYDRAULIC SYSTEM (HD 11 S/N 6069 & UP ONLY)

1. STEERING CONTROL VALVE

   a. Spool Valve - (minimum O.D.) . . . . . .624"
      Seat (at piston contact end) - 45° and concentric within . . . . . .003"

   b. Spool Bracket (maximum spool bore I.D.) . . . . . .626"

   c. Piston - (minimum O.D.) . . . . . 1.998"
      seat (at spool contact end) - 45° and concentric within . . . . . .003"

   d. Control Valve Housing (maximum piston bore I.D.) . . . . . 2.0025"

   e. Actuating Shafts - (minimum O.D. at bearing location) . . . . . .999"

2. STEERING PUMP
   a. Gear Housings - (maximum gear bore depth) . . . . . .7535"

   b. Gears - (minimum gear length) . . . . . .748"
      (minimum gear O.D.) . . . . . 1.1635"

   c. Shafts - (minimum O.D. at bearing locations) . . . . . .438"

B. STEERING CLUTCHES AND THROWOUT ASSEMBLIES

1. STEERING CLUTCHES

   a. Steel Plates - (minimum thickness) . . . . . .072"
      (must be flat within) . . . . . .015"

   b. Friction Plates
      HD6 prior to S/N 13993
         (minimum thickness) . . . . . .150"
         (must be flat within) . . . . . .015"
      HD6 Eff. S/N 13993 and HD11
         (minimum thickness) . . . . . .125"
         (must be flat within) . . . . . .015"

   c. Tapered Friction Plates (Used in HD6 Eff. S/N 13993 and HD11 Eff. S/N 3998)
         (minimum thickness - thick side) . . . . . .145"
         (minimum thickness - thin side) . . . . . .115"
         (must be flat - each side - within) . . . . . .015"

   d. Springs
      HD6 (Prior to S/N 13993) . . . . . 240-260 lbs. @ 2-21/64"
      HD6 (Eff. S/N 13993 and up) . . . . . 277-297 lbs @ 2-21/64"
      HD11 (all) . . . . . 335-365 lbs. @ 3-11/16"

   e. Back Plate - (HD11 only)
         (minimum thickness) . . . . . .350"
         (must be flat within) . . . . . .015"

   f. Hub (friction surface must be flat within) . . . . . .010"

   g. Stack Height (from top steel plate to top of hub)
      HD6 . . . . . 3/8" + or - 1/16"
      HD11 . . . . . 9/16" + or - 1/16"

   h. Stand-In (from hub to throwout plate)
      HD6 . . . . . 3/16" + or - 1/16"
      HD11 . . . . . 7/32" + or - 1/16"

i. Torque throwout plate capscrews to . . . . . 60-75 lbs. ft.

j. Torque clutch and brake drum driving hub to steering clutch attaching capscrews to . . . . . 90-100 lbs. ft.

2. THROWOUT ASSEMBLIES

a. Throwout bearing (fit in cage) . . . . . .000" - .0015" tight

b. Throwout Sleeve (fit in bearing) . . . . . .000" - .0015" tight

c. Torque steering clutch driving hub to bevel gear shaft attaching capscrew to . . . . . 300 lbs. ft.

TOPIC 10 SERVICE TOOLS

Service tools required to perform the various repairs explained in this manual are listed below.

Order service tools from your local Fiat-Allis dealer.

Important: Refer to Fiat-Allis Tool Catalogs, as follows, for complete tool illustrations, descriptions and usage:

English .... No. 73128466
French .... No. 73128467
Spanish .... No. 73128468
Italian .... No. 73128469

*Not serviced separately - serviced as a complete set only.

Figure No.	Fiat-Allis Part No.	Description
10, 11, 15	75295016	Pump, hydraulic
	75300133	Ram, 17.5 ton
	AC 300	Steering clutch set (discontinued, use shop press).
18	75294239	Steering hub puller