# INDEX


| DESCRIPTION | MANUFACTURERS PART NO. OR MODEL | CATERPILLAR PART NO. | PAGE |
|---|---|---|---|
| BEARINGS - Anti-Friction | | | 180 |
| BREATHER | DONALDSON P-2850 | 5B4776 | 259 |
| | " P-3545 | 6B6457 | 398 |
| CARBURETOR | ENSIGN Gte, 2" | 1475-A | 19 |
| | " AAe, 1 3/4" | 2836-A | 22 |
| | " AAea, 1 3/4" | 3546-A | 23 |
| | " Ael, 1 1/4" | L-1112 | 32 |
| | " AeLa, 1 1/4" | L-2092 | 33 |
| | " Gte, 1 1/2" | S-729 | 26 |
| | " Ae, 1 1/2" | S-1739 | 28 |
| | " AeS, 1 1/4" | S-2354 | 30 |
| | " AeSa, 1 1/4" | S-2499 | 31 |
| | " BeT, 1" | T-585 | 3[illegible] |
| | " BeV, 1" | V-378 | 35 |
| | " AeLc, 1 1/4" | 1A59[illegible] | [illegible] |
| | " BeTa, 1" | 1A[illegible] | [illegible] |
| | " BeVa, 1" | 1A[illegible] | [illegible] |
| | " Ke, 1 1/2" | 1A89[illegible] | [illegible] |
| | " AeSc, 1 1/4" | 1A99[illegible] | [illegible] |
| | " Ke, 1 3/4" | 2A49[illegible] | [illegible] |
| | " AeSca, 1 1/4" | 2A1063 | [illegible] |
| | " BeVc, 1" | 2A1516 | [illegible] |
| | " Keb, 1 3/4" | 2A1567 | 159 |
| | " Keb, 1 1/4" | 2A1701 | 155 |
| | " Keba, 1 1/4" | 2A20[illegible] | [illegible] |
| | " Kec, 1 1/4" | 2A2050 | [illegible] |
| | " BeTb, 1" | 1B130[illegible] | [illegible] |
| | " BeTb, 1" | 1B1907 | 50 |
| | " BeVb, 1" | 1B1404 | 51 |
| | " BeVbR, 1" | 1B1404 | 52 |
| | " AeSd, 1 1/4" | 1B5790 | 168 |
| | " Ke, 1 1/4" | 1B6260 | 155 |
| | " BeVb, 1" | 2B1637 | 167 |
| | " Kge, 1 3/4" | 2B2277 | 162 |
| | " Ked, 1 1/4" | 2B2746 | 18 |
| | " Kge, 1 1/4" | 2B2936 | 160 |
| | " Kge, 1 1/2" | 2B3035 | 161 |
| | " Keda, 1 1/4" | 2B3413 | 175 |
| | " Ked, 1 1/2" | 2B4840 | 176 |
| | " Ked, 1 1/2" | 2B8062 | 176 |
| | " K3, 1 1/4" | 2B82[illegible] | 171 |
| | " KG3, 1 1/4" | 2B9361 | 214 |
| | " KG3, 1 1/4" | 3B635 | 215 |
| | " BeDb, 1" | 3B1203 | 184 |
| | " Kgn3, 1 3/4" | 3B3277 | 228 |
| | " Kg, 1 3/4" | 6B4663 | 294 |
| | " Kgl, 2" No. 4773 | 7B4584 | 380 |
| | " Bec, 1" | 1C1420 | 40 |
| | " BeD, 1" | 1C1421 | 39 |
| | " Ae, 1 3/4" | | 20 |
| | " Aea, 1 1/2" | | 29 |
| | " Aea, 1 3/4" | | 21 |
| | " Ete, 1 1/2" | | 27 |
| | " He, 1" | | 152 |
| | " Heb, 1" | | 156 |
| | KINGSTON E4, 2" | 9331 | 13 |
| | " L2V, 2" | 17908 | 14 |
| | " L3, 1 1/4" | 1887[illegible] | 16 |
| | " L3, 1 1/2" | 21395 | 15 |
| | " L3, 1 1/4" | 165155 | 16 |
| | " L3, 1 1/4" | 170014 | 16 |
| | STROMBERG MT-4, 1 3/4" | 2673-A | 54 |
| | " MP-3, 1 1/2" | 1B9829 | 53 |
| | " M-4, 1 3/4" | | 55 |
| | WHEELER-SCHEBLER A, 1 1/2" | 61[illegible]70 | 62 |
| | " D, 3/4" | 2A600 | 63 |
| | ZENITH HF3 1/2, 1" | AM-3376 | 42 |
| | " 84-T | AM-3462 | 43 |
| | " T5T, 1 1/4" | AM-3673 | 45 |
| | " L7T, 1 3/4" | 19258 | 48 |



A[illegible]ORY AND SUPPLY CATALOG - Form 1736
REMOVE OLD ISSUE AND INSERT THIS IN ITS PLACE
PRINTED IN U.S.A. - MAY 1944

# INDEX


| DESCRIPTION | MANUFACTURERS PART NO. OR MODEL | CATERPILLAR PART NO. | PAGE |
|---|---|---|---|
| CARBURETOR | ZENITH T5T, 1 1/4" | 19286 | 46 |
| | " L6T, 1 1/2" | 22124 | 47 |
| | " U-5, 1 1/4" | 167810 | 44 |
| | " K5A, 1 1/4" No. 7074 | 2B5678 | 121 |
| | " K5A, 1 1/4" No. 7070 | 2B5738 | 130 |
| | " K5A, 1 1/4" No. 7150 | 2B7590 | 179 |
| | " 1N194 1/2X No. 7136 | 2B8447 | 170 |
| | " K5A, 1 1/4" No. 7228 | 2B9930 | 194 |
| | " K5A, 1 1/4" No. 7279 | 3B181 | 193 |
| | " K5A, 1 1/4" No. 7348 | 3B519 | 183 |
| | " K5A, 1 1/4" No. 7433 | 3B875 | 196 |
| | " K6A, 1 1/2" No. 7329 | 3B952 | 190 |
| | " K6A, 1 1/2" No. 7332 | 3B1507 | 197 |
| | " K6A, 1 1/2" No. 7331 | 3B1934 | 204 |
| | " K5A, 1 1/4" No. 7455 | 3B2669 | 201 |
| | " K6A, 1 1/2" No. 7330 | 3B2725 | 198 |
| | " TU-4C No. 7513 | 3B3088 | 195 |
| | " 22AX8 No. 7580 | 3B6161 | 212 |
| | " 22AX8 No. 7782 | 3B6395 | 213 |
| | " K5A, 1 1/4" No. 7957 | 3B7033 | 220 |
| | " TU-4C No. 7935 | 3B7865 | 221 |
| | " TU-4CV No. 7843 | 3B8058 | 222 |
| | " TU-4C No. 8431 | 4B2838 | 246 |
| | " 22AX8 No. 8408 | 4B4955 | 239 |
| | " K5A, 1 1/4" No. 8741 | 4B6340 | 256 |
| | " TU-4C No. 8431 | 4B7034 | 246 |
| | " GS16 No. 8919 | 5B1957 | 360 |
| | " K5A, 1 1/4" No. 8893 | 5B7945 | 257 |
| | " K5A, 1 1/4" No. 9182 | 5B7986 | 269 |
| | " TU-4C No. 8431 | 5B9838 | 422 |
| | " TU-4C No. 7935 | 6B1434 | 260 |
| | " TU-4C No. 8431 | 6B1739 | 267 |
| | " 22AX8 No. 8408 | 6B1868 | 266 |
| | " 22AX8 No. 7580 | 6B1869 | 264 |
| | " 22AX8 No. 7782 | 6B2013 | 265 |
| | " TU-4C No. 7843 | 6B2014 | 268 |
| | " GS16 No. 9161 | 6B3610 | 379 |
| | " TU-4C No. 7935 | 6B4146 | 260 |
| | " 22AX8 No. 7580G | 7B3076 | 364 |
| | " 22AX8 No. 8408F | 7B3160 | 366 |
| | " TU-4C No. 7935F | 7B3274 | 362 |
| | " 22AX8 No. 7782G | 7B3275 | 365 |
| | " TU-4C No. 8431D | 7B3397 | 361 |
| | " TU-4C No. 7843D | 7B3302 | 363 |
| | " TU-4C No. 8431D | 7B3776 | 423 |
| | " 22AX8 No. 9536 | 7B4716 | 383 |
| | " TU-4C No. 9546A | 7B4717 | 400 |
| | " TU-4CV No. 9548A | 7B4718 | 399 |
| | " 22AX8 No. 9537 | 7B4719 | 384 |
| | " 22AX8 No. 9538 | 7B4720 | 385 |
| | " 22AX8 No. 9539 | 7B4721 | 386 |
| | " TU-4C No. 9547A | 7B4722 | 401 |
| | " TU-4C No. 9545A | 7B4726 | 402 |
| | " TU-4C No. 9549A | 7B4727 | 403 |
| | " K5A No. 9844 | 8B7316 | 433 |
| CHAIN | | | 165 |
| CLEANER - Air | DONALDSON 502-A First Type | 2B652 | 101 |
| | " 503-A | 2B3733 | 101 |
| | " 902-A | 2B3939 | 111 |
| | " 900-A | 2B3945 | 111 |
| | " A-907 | 2B3945 | 111 |
| | " 1001-A | 2B4016 | 111 |
| | " A-1004 | 2B4016 | 111 |
| | " 1100-A | 2B4055 | 111 |
| | " A-1103 | 2B4055 | 111 |
| | " 502-A Second Type | 2B4260 | 101 |
| | " A-1102 | 2B7691 | 111 |
| | " A-1103 | 2B7691 | 111 |
| | " A-1002 | 2B7865 | 111 |
| | " A-1005 | 2B7865 | 111 |

ASSORY AND SUPPLY CATALOG - Form 1736
REMOVE OLD ISSUE AND INSERT THIS IN ITS PLACE
PRINTED IN U.S.A. - MAY 1944


| DESCRIPTION | MANUFACTURERS PART NO. OR MODEL | CATERPILLAR PART NO. | PAGE |
|---|---|---|---|
| **CLEANER - Air** | DONALDSON A-661 | 2B8971 | 111 |
| | " A-756 | 2B9802 | 111 |
| | " A-665 | 3B188 | 111 |
| | " A-906 | 3B409 | 111 |
| | " B-650 | 3B726 | 178 |
| | " A-755 | 3B942 | 111 |
| | " A-760 | 3B3265 | 111 |
| | | | 219 |
| | " A-1107 | 3B6841 | 209 |
| | " A-911 | 3B7217 | 209 |
| | " A-1009 | 3B7218 | 209 |
| | " A-768 | 3B7331 | 219 |
| | " A-1108 | 3B7851 | 209 |
| | " A-431 | 3B8057 | 224 |
| | " A-1009 | 4B235 | 209 |
| | " A-913 | 4B2071 | 209 |
| | " A-1110 | 4B2444 | 209 |
| | " E-452 | 4B2445 | 237 |
| | " A-1012 | 4B3259 | 209 |
| | " A-863 | 4B4493 | 209 |
| | " B-654 | 4B5618 | 244 |
| | " B-600 | 4B6979 | 247 |
| | " A-709 | 4B9127 | 248 |
| | " A-436 | 5B1238 | 254 |
| | " A-1014 | 5B2766 | 295 |
| | " A-7091 | 6B1815 | 288 |
| | " A-867 | 6B3632 | 263 |
| | " A-7092 | 6B7407 | 289 |
| | " A-7681 | 6B7408 | 290 |
| | " A-1025 | 6B7877 | 342 |
| | " A-7682 | 6B9102 | 301 |
| | " A-7093 | 6B9210 | 299 |
| | " A-915 | 6B9984 | 334 |
| | " A-7683 | 7B4934 | 375 |
| | " A-1113 | 7B5220 | 374 |
| | " A-1028 | 7B7769 | 389 |
| | " E-600 | 8B319 | 408 |
| | STROMBERG P-9062 | 17653 | 56 |
| | " P-9099 | 17851 | 57 |
| | " P-10470 | 22161 | 56 |
| | " P-9830 | 170165 | 58 |
| | VORTOX OR POMONA 2330-D | 2B4066 | 100 |
| | " | | 59-61 |
| **CLEANER - Fuel** | ENSIGN 3076 | 2524-A | 41 |
| | " 3075 | T-793 | 41 |
| **CLUTCH** | TWIN DISC C-6 1/2 | AM-3350 | 70 |
| | " " C-1-9 | AM-3681 | 69 |
| | " " A-9 | 166109 | 67 |
| | " " A | 166417 | 65 |
| | " " B-1 | 168215 | 66 |
| | " " B-1-9 | 171185 | 68 |
| | " " B-4 1/2 | 3B360 | 187 |
| | " " C-5 1/2 | | 96 |
| **COMPRESSOR - Air** | BENDIX-WESTINGHOUSE 216893 | 6B5372 | 372 |
| | " 217676 | 7B3196 | 373 |
| | MIDLAND 7A-B, N-420-A | 6B7872 | 370 |
| | " 7A-B, N-420-C | 7B2496 | 371 |
| **COMPRESSOR - Hand** | ALEMITE 1006 | | 7 |
| | " 1029 | | 4 |
| | " 1079 | | 9 |
| | " 1080 | | 9 |
| | " C-600 | | 7 |
| | " C-700 | | 8 |
| | " LC-800 | | 76 |
| | " Z-3-A | | 5 |
| | " Z-6-8 | | 12 |
| | " Z-3-G | | 6 |
| | " 6556-D | | 396 |

# INDEX


| DESCRIPTION | MANUFACTURERS PART NO. OR MODEL | CATERPILLAR PART NO. | PAGE |
|---|---|---|---|
| COMPRESSOR - Hydraulic | ALEMITE 5256 | | 114 |
| | " 5545 | | 150 |
| | " 5586 | | 151 |
| | " 6551 | | 207 |
| | " 6556 | | 217 |
| COMPRESSOR - Volume | ALEMITE 5378 or 1001 | | 1 |
| | " 6521 or 6522 | | 236 |
| | " 6536-A | | 233 |
| CUP - Oil | GITS BROS. | | 99 |
| FAN | FORDSON S-575 | AM-5083 | 90 |
| | SCHWITZER-CUMMINS A-6819 | AM-3492 | 89 |
| | " B-6657 | AM-3979 | 86 |
| | " 0B-12389 | AM-3979 | 88 |
| | " 0B-6980 | 165938 | 80 |
| | " 0B-3701-A | 166149 | 79 |
| | " B-9400 | 167720 | 84 |
| | " B-16824 | 167720 | 84 |
| | " 0B-7925 | 167720 | 83 |
| | " 0B-8032 | 167720 | 81 |
| | " 0B-9180 | 167720 | 82 |
| | " A-10462A | 168314 | 78 |
| | " 0B-13129 | 168314 | 77 |
| | " 0A-11165 | 171182 | 85 |
| | " 0B-12353 | 171182 | 87 |
| | " 0A-11165 | 172184 | 85 |
| | " 0B-12353 | 172184 | 87 |
| FAN BRACKET | SCHWITZER-CUMMINS 104243 | 3B9816 | 431 |
| FASTENER - Lift The Dot | UNITED CARR | | 64 |
| FILTER - Drain | ENSIGN 6658 | 1B9942 | 17 |
| FILTER - Fuel | ZENITH F223X1 | 3B6956 | 210 |
| | " 22X1-G-2 | 3B8821 | 225 |
| | " F223X1 | 3B8830 | 210 |
| FILTER - Natural Gas | ENSIGN 6736 | 5B7531 | 337 |
| FITTINGS - Button Head | ALEMITE | | 11 |
| FITTINGS - Hydraulic | ALEMITE | | 11 |
| FITTINGS - Push Type (Bayonet) | ALEMITE | | 10 |
| FITTINGS - Push Type (Zerk) | ALEMITE | | 11 |
| FITTINGS - Brass | IMPERIAL | | 104 |
| GENERATOR | BOSCH RJ 75/6 900 R S50 | L-1127 | 158 |
| | " RJB 75/6 900R S53 | 113259 | 164 |
| | " RJB 75/6 900R S50 | 1A106 | 126 |
| | " RJB 75/6 900R S51 | 1A107 | 138 |
| | " RJF 75/6 900R S50 | 2A832 | 147 |
| | " RJB 75/6 900R S70 | 1B1011 | 146 |
| | " RJB 75/6 900R S71 | 1B1012 | 157 |
| | " RJB 75/6 900R S50 | 1B8907 | 126 |
| | " RJB 75/6 900R S71 | 1B9153 | 157 |
| | " RJF 75/6 900L S50 or S187 | 2B1918 | 147 |
| | " RJF 75/6 900R S606 or S187 | 3B754 | 173 |
| | " RKF 136 900L S663 | 3B8420 | 234 |
| | " ARKF 130/6 900R S142 | 4B3467 | 339 |
| | " RJF 75/6 900L S554 | 5B1922 | 252 |

ASSORY AND SUPPLY CATALOG - Form 1736
REMOVE OLD ISSUE AND INSERT THIS IN ITS PLACE
PRINTED IN U.S.A. - MAY 1944


| DESCRIPTION | MANUFACTURERS PART NO. OR MODEL | CATERPILLAR PART NO. | PAGE |
|---|---|---|---|
| GENERATOR | BOSCH RKF 136 900R S670 | 5B4247 | 285 |
| | " RJF 75/6 900L S170 | 5B7888 | 286 |
| | " ARJF 75/6 900A21 | 7B8343 | 409 |
| | " ARJF 75/6 900A22 | 7B8344 | 409 |
| | " ARKF 130/6 900A21 | 7B8345 | 410 |
| | " ARKF 130/6 900A22 | 7B8346 | 410 |
| | " ARJF 75/6 900A12 | 7B8347 | 411 |
| | " ARKF 130/6 900A12 | 7B8348 | 412 |
| | DELCO-REMY 968-W | 1B5240 | 262 |
| | " 965-Z | 1B5240 | 113 |
| | " 953-R | 1B5785 | 123 |
| | " 953-U | 2B2255 | 133 |
| | " 939-E | 2B5602 | 129 |
| | " 945-W | 2B6745 | 136 |
| | " 939-P | 4B5862 | 243 |
| | " 939-N | 4B5931 | 242 |
| | " 939-F | 5B2495 | 253 |
| | " 1102505 | 6B1616 | 351 |
| | " 1102522 | 6B1808 | 350 |
| | " 1101666 | 6B1809 | 397 |
| | " 1101667 | 6B2231 | 349 |
| | " 1101668 | 6B2406 | 291 |
| | " 1101672 | 7B1285 | 352 |
| | " 1102525 | 7B1286 | 353 |
| | " 1106256 | 8B1431 | 415 |
| | " 1102675 | 8B5536 | 421 |
| | LEECE-NEVILLE 1496G | 4B2034 | 313 |
| | " 1745G | 4B3248 | 303 |
| | " 1910G | 4B9748 | 308 |
| | " 1497G | 5B4905 | 387 |
| | " 1604G | 5B7538 | 394 |
| | " 1946G | 5B7910 | 311 |
| | " 1920G | 5B8011 | 305 |
| | " 1911G | 5B9455 | 309 |
| | " 1961G | 5B9456 | 307 |
| | " 1945G | 5B9779 | 312 |
| | " 1960G | 5B9781 | 306 |
| | " 1912G | 5B9809 | 310 |
| | " 1957G | 6B2333 | 314 |
| | " 1929G | 6B3062 | 304 |
| | " 1966G | 6B6207 | 315 |
| | " 2128G | 7B990 | 393 |
| | " 2044G | 7B1481 | 377 |
| | " 2026G | 7B1784 | 376 |
| | " 2153G | 7B6911 | 413 |
| | " 2065G | 7B6912 | 428 |
| | " 2031G | 7B6918 | 407 |
| | " 2125G | 7B6919 | 406 |
| GOVERNOR | PIERCE A-765 | 172183 | 149 |
| HOSE - Hand Compressor | ALEMITE | | 10 |
| HOSE - Volume Compressor | ALEMITE 5523 | | 2 |
| | " 5534 | | 3 |
| | " 6542 | | 232 |
| IMPULSE STARTER | BOSCH 1C-200, ED4 | | 115 |
| | " 1C-200, ED5 | | 115 |
| | " 1C-400, ED1 | | 169 |
| | " IS | | 117 |
| | EISEMANN 20004 | | 163 |
| | " 22280 | | 216 |
| | " 22281 | | 140 |
| | " 22285 | | 132 |
| | " 22294 | | 125 |
| | " 22299 | | 125 |
| | " 22406 | | 392 |
| | " 22440 | | 202 |
| | " 22449 | | 284 |
| | " 22739 | | 120 |
| | " 22832 | | 110 |

# INDEX


| DESCRIPTION | MANUFACTURERS PART NO. OR MODEL | CATERPILLAR PART NO. | PAGE |
|---|---|---|---|
| IMPULSE STARTER | EISEMANN 22833 | | 108 |
| | " 23384 | | 241 |
| | " 23444 | | 251 |
| | " 23910 | | 261 |
| | " 23911 | | 280 |
| | " 24068 | | 281 |
| | " 24069 | | 282 |
| | " 24757 | | 279 |
| LAMP | DO-RAY | 1B78 | 92 |
| | " | 1B86 | 92 |
| | GUIDE 752 | 19559 | 74 |
| | " 753-B | 3548-A | 74 |
| | " 362-E | 1B3178 | 75 |
| | " 362-H | 1B3178 | 75 |
| | " 362-H | 2B1949 | 75 |
| | " 536-A | 2B6801 | 148 |
| | " 536-A | 2B6802 | 148 |
| | " 534-A | 4B1171 | 238 |
| | " 534-A | 4B1172 | 238 |
| LAMP - Tail | GUIDE 225-K | 2B9375 | 218 |
| MAGNETO | BOSCH U4ED1 | AM-3737 | 103 |
| | " ZR4ED.28 | | 145 |
| | " ZR4ED.34 | | 134 |
| | " ZR4ED.35 | | 116 |
| | EISEMANN G4-ED3 | L-1369 | 131 |
| | " G4-ED2 | 17928 | 144 |
| | " G4-ED2 | 19551 | 144 |
| | " G4-Ed3 | 19715 | 131 |
| | " G4-ED2 | 165104 | 144 |
| | " G4-Ed2 | 166885 | 144 |
| | " G4-ED2 | 170139 | 144 |
| | " GV-4 | 1A295 | 109 |
| | " GL-2 | 1A9623 | 124 |
| | " GL-1 | 2A593 | 139 |
| | " GL-2 | 2A1499 | 124 |
| | " GV-2Q | 2A2436 | 119 |
| | " RT-2H | 2A4320 | 199 |
| | " RT-2H | 2A4520 | 199 |
| | " CT-4 | 2B2238 | 105 |
| | " RT-2Q | 3B2459 | 200 |
| | " CM-4 | 3B4690 | 205 |
| | " GL-1 | 3B7962 | 139 |
| | " RT-2Q | 4B378 | 235 |
| | " RC-2H | 4B389 | 231 |
| | " CM-4 | 4B553 | 229 |
| | " RC-2Q | 4B719 | 230 |
| | " RC-2H | 4B1587 | 231 |
| | " RC-2H | 4B2525 | 231 |
| | " RC-2Q | 4B3554 | 240 |
| | " RC-2Q | 4B7747 | 240 |
| | " RC-2Q | 4B7767 | 250 |
| | " GL-1 | 4B7888 | 139 |
| | " GV-6 | 5B2955 | 336 |
| | " CM-6 | 5B4851 | 276 |
| | " RC-2Q | 6B1566 | 272 |
| | " RC-2Q | 6B1598 | 272 |
| | " RC-2Q | 6B1707 | 230 |
| | " GL-1 | 6B1823 | 277 |
| | " GL-1 | 6B1824 | 277 |
| | " RC-2Q | 6B2756 | 274 |
| | " RC-2Q | 6B3561 | 275 |
| | " RC-2H | 6B6304 | 283 |
| | " CM-4 | 6B9092 | 106 |
| | " GL-4 | 1C1413 | 143 |
| OILER | EMEROL T-2 | 5B7384 | 388 |
| PUMP - Fuel | AC 1522731 | 1A8300 | 72 |
| | " 1522204 | 1B5260 | 71 |

ACCESSORY AND SUPPLY CATALOG - Form 1736
REMOVE OLD ISSUE AND INSERT THIS IN ITS PLACE
PRINTED IN U.S.A. - MAY 1944


| DESCRIPTION | MANUFACTURERS PART NO. OR MODEL | CATERPILLAR PART NO. | PAGE |
|---|---|---|---|
| **PUMP - Fuel** | AC 1522151 | 2B2521 | 102 |
| | " 1522205 | 3B179 | 177 |
| | " 1523790 | 4B8432 | 249 |
| | BLACKMER PA-404 | 2B8230 | 203 |
| | GOULDS 464 No. 1 | 3B4738 | 188 |
| | STEWART-WARNER 407-AM | 1A8300 | 72 |
| | " " 807-A | 1B5260 | 71 |
| | " " 807-G | 2B2521 | 102 |
| | VIKING ECH-2 | 2B712 | 141 |
| | " B-90-D | 2B2692 | 142 |
| | " C-90-D | 3B2482 | 192 |
| | " C-90-F | 3B5160 | 206 |
| **PUMP - Tire** | KELLOGG 42-5125 | 3B7943 | 226 |
| | " 42-12970 | 5B3421 | 258 |
| | " 42-13075 | 6B1594 | 298 |
| | " 42-13081 | 6B8391 | 300 |
| **PUMP - Vacuum** | BENDIX BK-16490 | 6B6379 | 296 |
| | " BK-16551 | 6B9079 | 297 |
| **PUMP - Water** | FAIRBANKS-MORSE 5520 1" | 2B5896 | 189 |
| | " " 5520 1" | 3B7810 | 227 |
| | " " 5520 2" | 3B7842 | 223 |
| | " " 5520P 1" | 6B9988 | 335 |
| | GARDNER-DENVER 1" Type C | 4B5417 | 245 |
| | " " 1-AUX-522 | 4B8603 | 302 |
| | " " 1" Type C | 6B9970 | 340 |
| | " " 1" Type "CAX" | 7B10 | 341 |
| **PRIMER** | IMPERIAL 94-D | 3B1941 | 191 |
| **REGULATOR - Generator** | DELCO-REMY 5830 | 8B1430 | 414 |
| | LEECE-NEVILLE 1745R | 4B3247 | 316 |
| | " " 1910R | 4B9761 | 319 |
| | " " 1496R | 5B3697 | 320 |
| | " " 1497R | 5B4832 | 320 |
| | " " 1946R | 5B7911 | 404 |
| | " " 29R | 5B8221 | 317 |
| | " " 1960R | 6B1137 | 319 |
| | " " 1912R | 6B1140 | 356 |
| | " " 1911R | 6B1364 | 319 |
| | " " 1961R | 6B1365 | 319 |
| | " " 1945R | 6B1602 | 405 |
| | " " 1999R | 6B2259 | 321 |
| | " " 1929R | 6B3099 | 318 |
| | " " 1579R | 6B6206 | 321 |
| | " " 2128R | 7B989 | 318 |
| | " " 2044R | 7B1473 | 321 |
| | " " 2026R | 7B2764 | 321 |
| | " " 2125R | 7B6921 | 405 |
| | " " 2109R | 7B6922 | 319 |
| | " " 2031R | 7B6923 | 319 |
| | " " 2065R | 7B7331 | 356 |
| | " " 2153R | 7B7415 | 404 |
| | " " 2176R | 8B2436 | 321 |
| | " " 2000R | 8B5841 | 424 |
| **REGULATOR - Pressure** | ENSIGN 1" x 3/4" | 2B2276 | 172 |
| | " B, 1" | 3B353 | 185 |
| | " F, 3/4" | 6B3554 | 287 |
| | " B, 1" No. 5069 | 7B5231 | 381 |
| | FISHER 733, 1 1/2" | 5B7529 | 338 |
| | ZENITH A185-5 | 5B1958 | 359 |
| **SCREENS - Inlet** | DONALDSON | | 112 |
| **STARTING MOTOR** | DELCO-REMY 573 | 1B5216 | 73 |
| | " 574 | 1B5599 | 73 |
| | " 736-D | 1B5784 | 137 |
| | " SM-1468 | 1B6889 | 127 |
| | " 477 | 3B3983 | 211 |

| DESCRIPTION | MANUFACTURERS PART NO. OR MODEL | CATERPILLAR PART NO. | PAGE |
|---|---|---|---|
| STARTING MOTOR | DELCO-REMY 737-V | 3B5032 | 208 |
| | " 1107426 | 6B286 | 348 |
| | " 778 | 6B2761 | 292 |
| | " 1107024 | 6B2861 | 293 |
| | " 1107029 | 6B9157 | 343 |
| | " 1107436 | 7B238 | 344 |
| | " 1107820 | 7B408 | 345 |
| | " 1107822 | 7B409 | 346 |
| | " 1107823 | 7B536 | 347 |
| | " 1107030 | 7B2421 | 357 |
| | " 1108915 | 8B3029 | 434 |
| | LEECE-NEVILLE 1098M | 4B2643 | 326 |
| | " " 1092M | 4B4110 | 390 |
| | " " 1212M | 4B7272 | 322 |
| | " " 1284M | 5B177 | 325 |
| | " " 1220M | 5B561 | 324 |
| | " " 1223M | 5B3192 | 369 |
| | " " 1177M | 5B6060 | 333 |
| | " " 1330M | 6B3184 | 323 |
| | " " 1332M | 6B7595 | 354 |
| | " " 1214M | 7B7967 | 391 |
| STRAINER - Fuel | KINGSTON 1246 | 170081 | 16 |
| SWITCH | BOSCH S-12 | 2656-A | 135 |
| | EISEMANN 17844 | L-1370 | 122 |
| | " 22010 | 1B4213 | 122 |
| | LEECE-NEVILLE 121-S | 4B7343 | 330 |
| | " " 21-MS-32 | 4B7444 | 382 |
| | " " 27-MS-12 | 4B7529 | 328 |
| | " " 21-MS-24 | 4B9282 | 331 |
| | " " 121-S | 5B83 | 330 |
| | " " 21-MS-48 | 5B84 | 332 |
| | " " 1175 | 5B8012 | 327 |
| | " " 116-SS | 5B9450 | 416 |
| | " " 26-MS-32 | 6B2189 | 417 |
| | " " 31-SPS | 6B5807 | 395 |
| | " " 31-MS-12 | 6B7257 | 329 |
| UNIVERSAL JOINT | BLOOD BROTHERS BW-5 | 1B7639 | 91 |
| | " " IF | 5B1016 | 271 |
| | " " IF | 5B1018 | 270 |
| VACUUM TANK | STEWART-WARNER 146-A | 9741 | 98 |
| | " " 147-M | 60775 | 98 |
| | " " 147-A | | 98 |

# ALEMITE VOLUME COMPRESSOR NO. 5378

Manufacturer
STEWART-WARNER CORPORATION
1826-1852 Diversey Parkway
Chicago, Illinois

For Parts Service on this Compressor, Order from the Manufacturer or his Representative

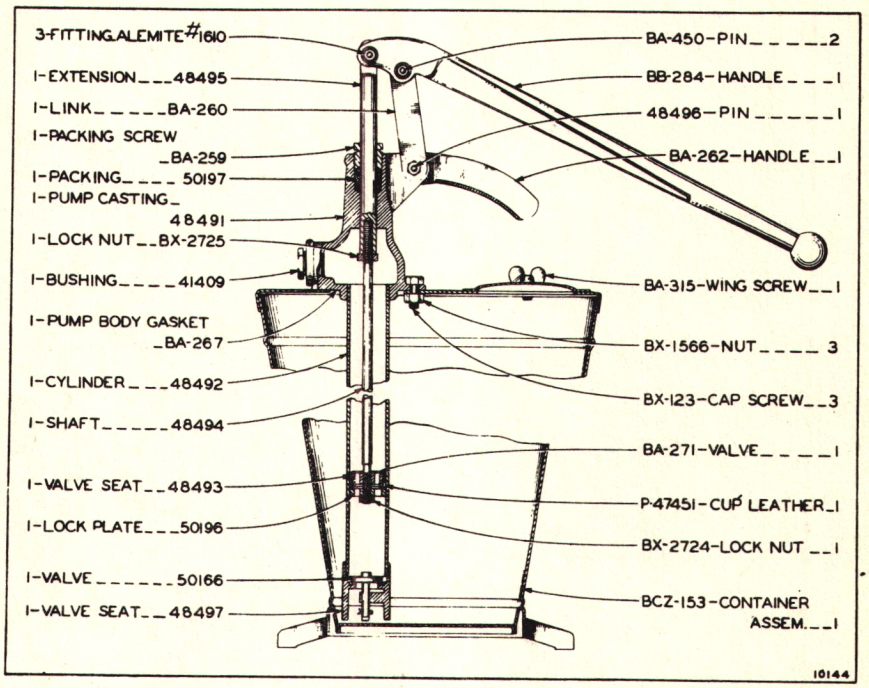


Alemite No. 5378

Note: Compressor No. 5378 and No. 1001 are identical, except for color. No. 5378 is painted yellow.

NUMBERS SHOWN ARE MANUFACTURERS, NOT "CATERPILLAR" PART NUMBERS, EXCEPT WHEN SPECIFIED.

Form 1736 Printed in U. S. A. Issue 2 6-1-37

# ALEMITE 5' RUBBER HOSE No. 5523

Manufacturer
ALEMITE CORPORATION
2650 North Crawford Ave.
Chicago, Ill.

**For Parts Service on this Hose Order from the Manufacturer or his Representative**

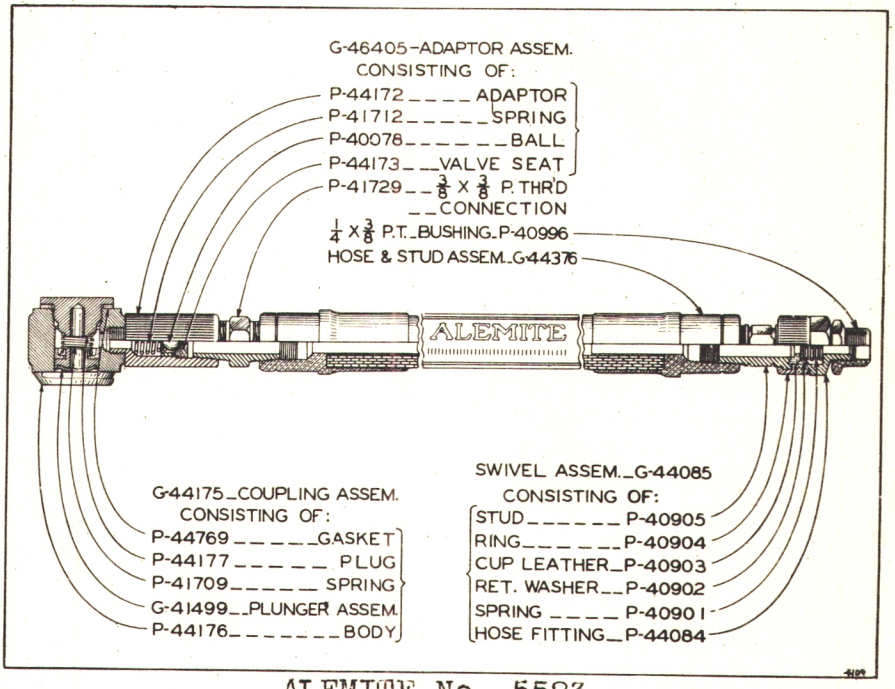


ALEMITE No. 5523

For use with Alemite Volume Compressor No. 5378

Numbers shown are manufacturer's, not "Caterpillar Part numbers.

# ALEMITE 5' RUBBER HOSE No. 5534

Manufacturer
ALEMITE CORPORATION
2650 North Crawford Ave.
Chicago, Ill.

For Parts Service on this Hose Order from the Manufacturer or his Representative

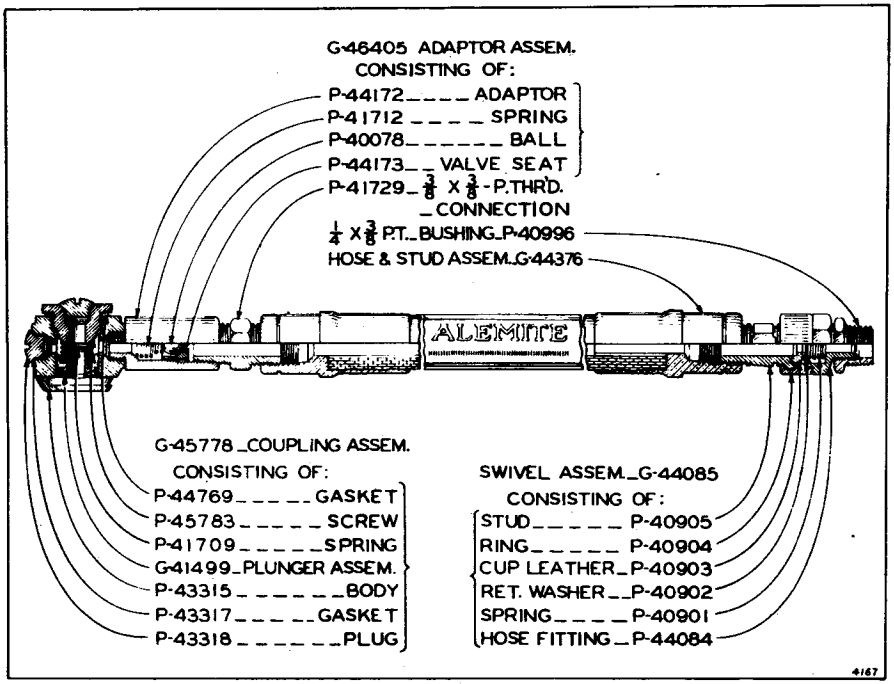


ALEMITE No. 5534

For use with Alemite Volume Compressor No. 5378

Numbers shown are manufacturer's, not "Caterpillar" Part numbers.

Form 1736 Printed in U.S.A.

# ALEMITE AUTOMATIC COMPRESSOR
## No. 1029

Manufacturer
ALEMITE CORPORATION
2650 North Crawford Ave.
Chicago, Ill.

For Parts Service on this Compressor Order from the Manufacturer or his Representative

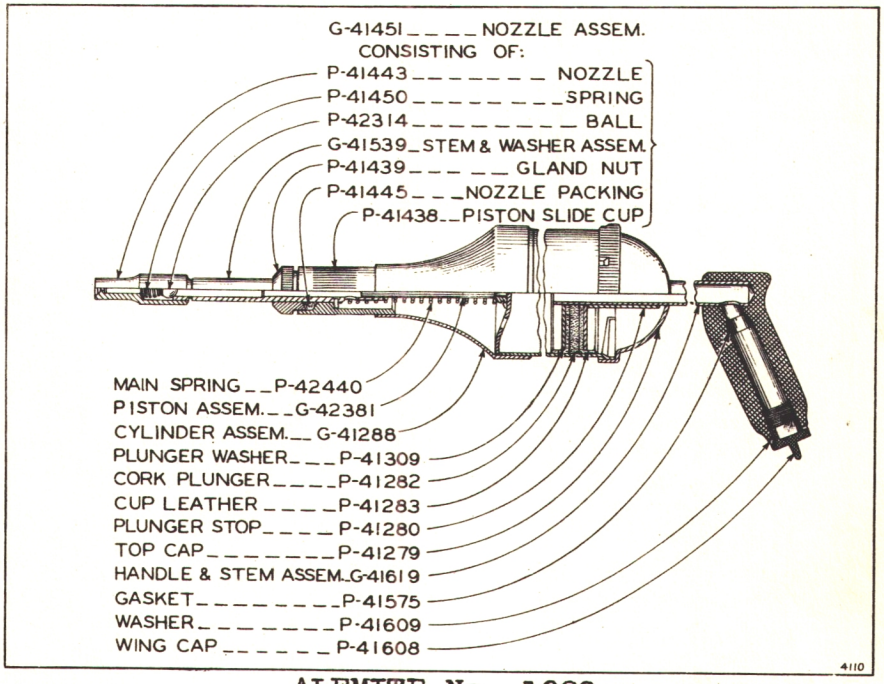


ALEMITE No. 1029

Numbers shown are manufacturer's, not "Caterpillar" Part numbers.

# ALEMITE AUTOMATIC COMPRESSOR
## No. Z-3-A

Manufacturer
ALEMITE CORPORATION
2650 North Crawford Ave.
Chicago, Ill.

For Parts Service on this Compressor Order from the Manufacturer or his Representative

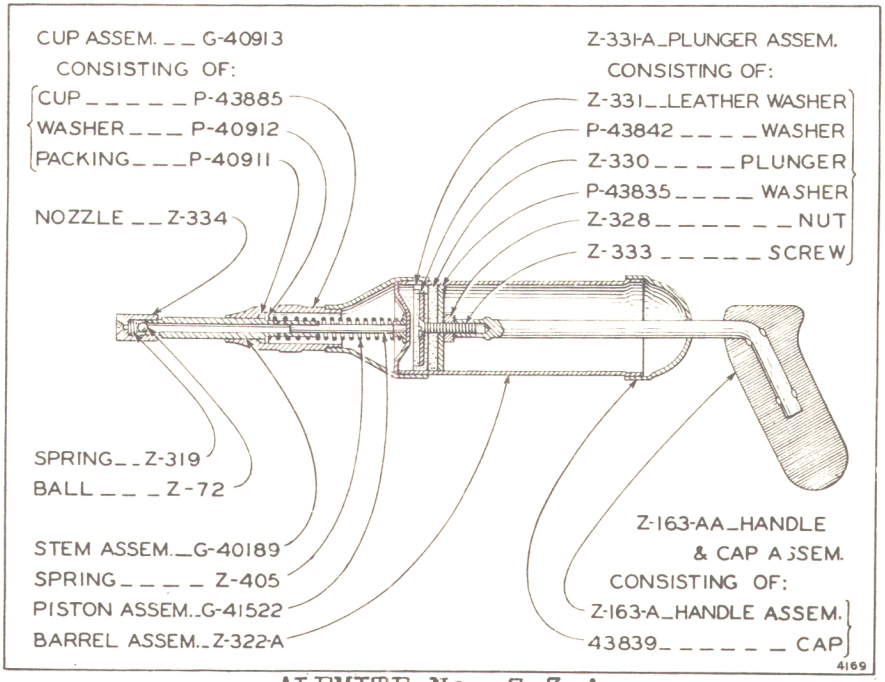


ALEMITE No. Z-3-A

Numbers shown are manufacturer's, not "Caterpillar" Part numbers.

Form 1736 Printed in U.S.A.

# ALEMITE AUTOMATIC COMPRESSOR
## No. Z-3-G

Manufacturer
ALEMITE CORPORATION
2650 North Crawford Ave.
Chicago, Ill.

For Parts Service on this Compressor Order from the Manufacturer or his Representative

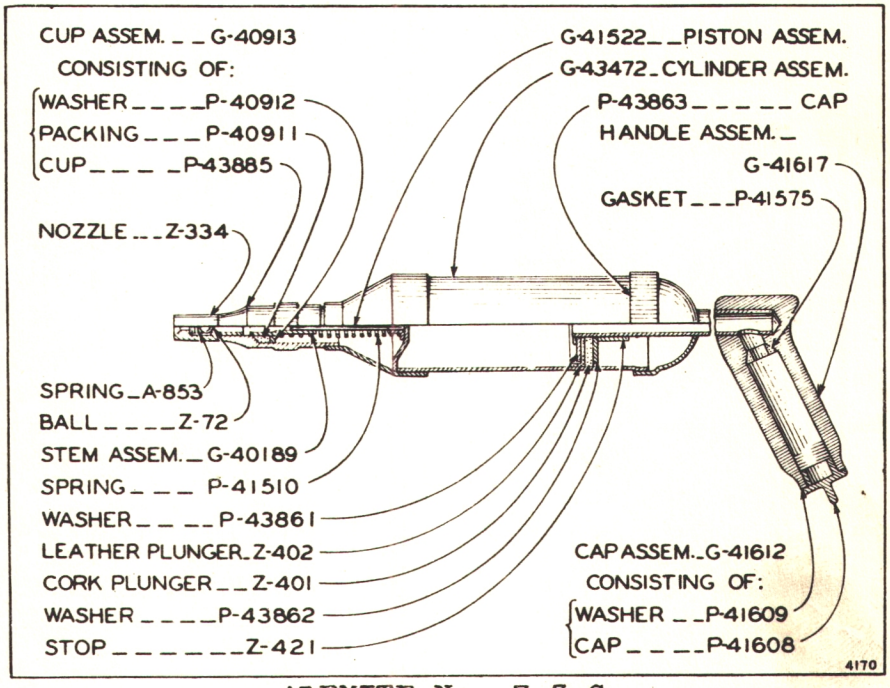


ALEMITE No. Z-3-G

Numbers shown are manufacturer's, not "Caterpillar" Part numbers.

Form 1736 Printed in U.S.A.

# ALEMITE MEDIUM COMPRESSOR No. C-700

Manufacturer
ALEMITE CORPORATION
2650 North Crawford Ave.
Chicago, Ill.

For Parts Service on this Compressor Order from the Manufacturer or his Representative

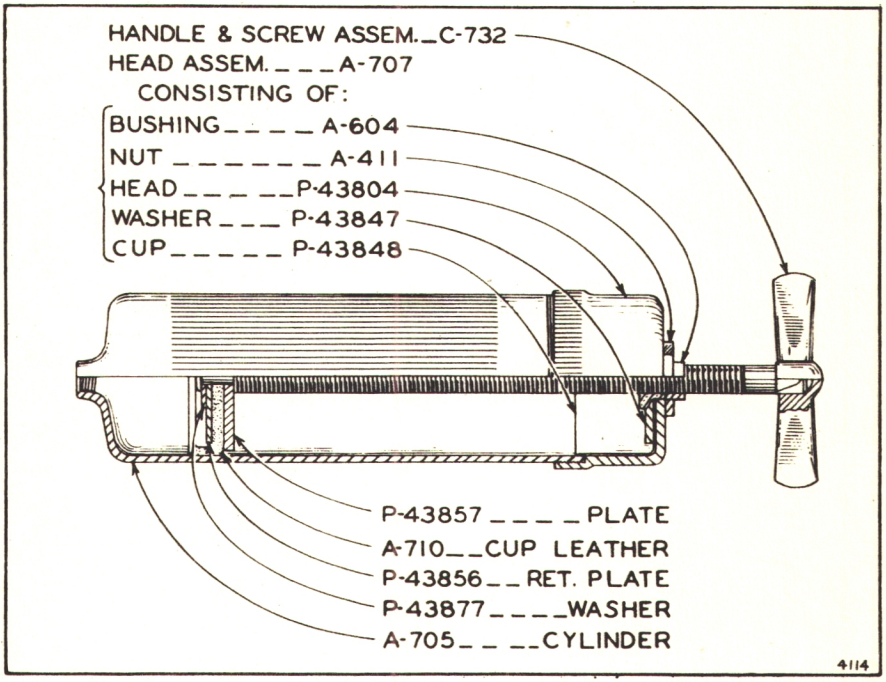


ALEMITE No. C-700

Numbers shown are manufacturer's, not "Caterpillar" Part numbers.

# ALEMITE LARGE HAND COMPRESSOR
## No. 1080

Manufacturer
ALEMITE CORPORATION
2650 North Crawford Ave.
Chicago, Ill.

For Parts Service on these Compressors Order from the Manufacturer or his Representative

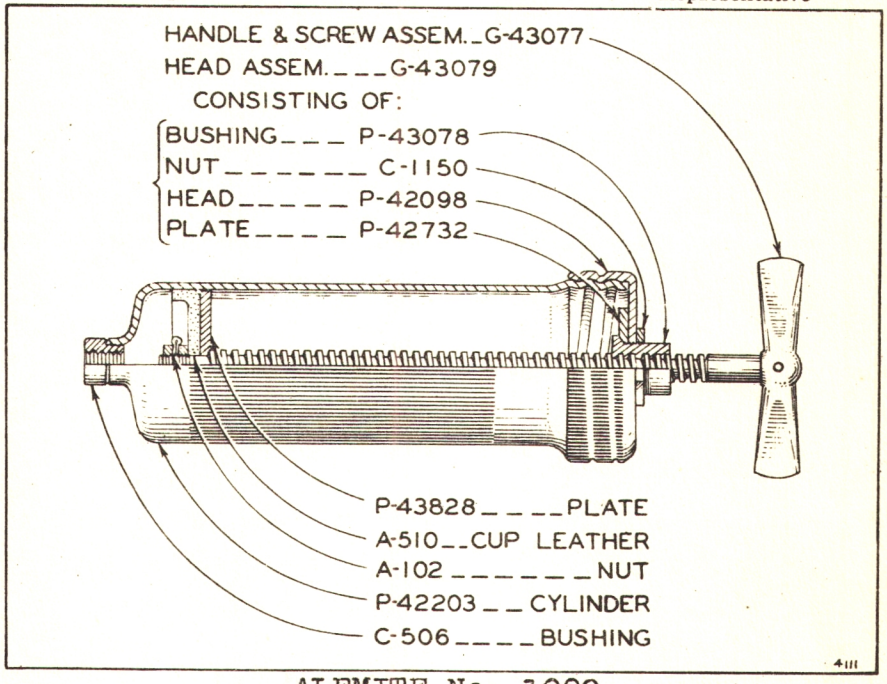


ALEMITE No. 1080

## ALEMITE LARGE CRANK HANDLE COMPRESSOR No. 1079

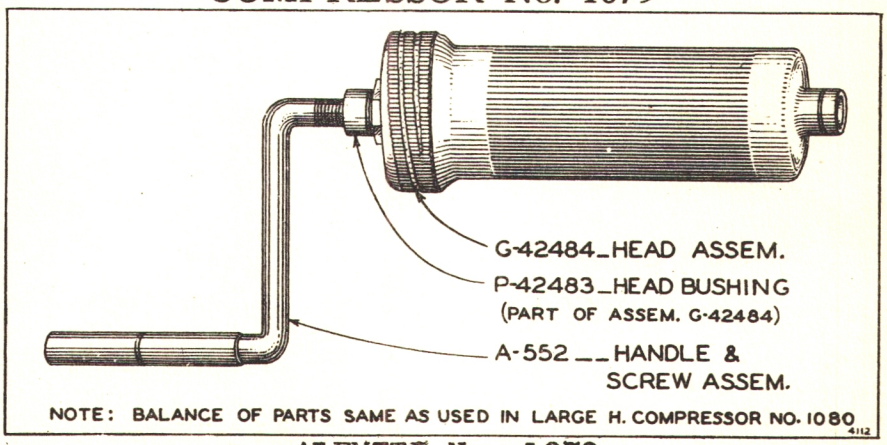


ALEMITE No. 1079

Numbers shown are manufacturer's, not "Caterpillar" Part numbers.

# ALEMITE PIN TYPE (BAJONET) FITTINGS AND HOSE

Manufacturer
ALEMITE CORPORATION
2650 North Crawford Ave.
Chicago, Ill.

For Parts Service on these Items Order from the Manufacturer or his Representative

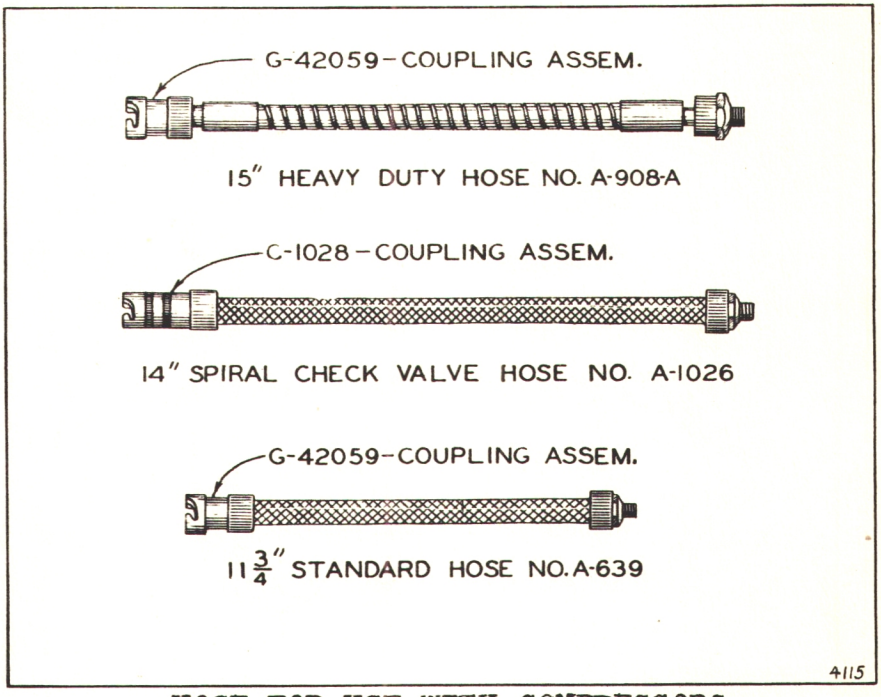


HOSE FOR USE WITH COMPRESSORS
C-600, 1006, C-700, 1079 & 1080

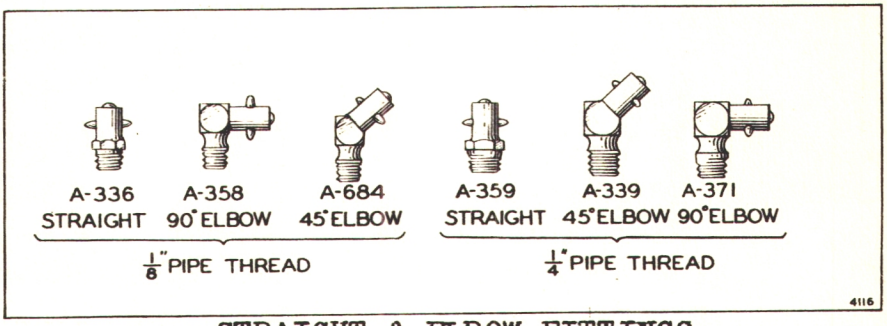


STRAIGHT & ELBOW FITTINGS
FOR USE WITH ABOVE HOSE

Numbers shown are manufacturer's, not "Caterpillar" Part numbers.

# KINGSTON CARBURETOR TYPE-E4,2"

Manufacturer
KINGSTON PRODUCT CORPORATION
Kokomo, Indiana

For Parts Service on this Carburetor Order from the Manufacturer or his Representative

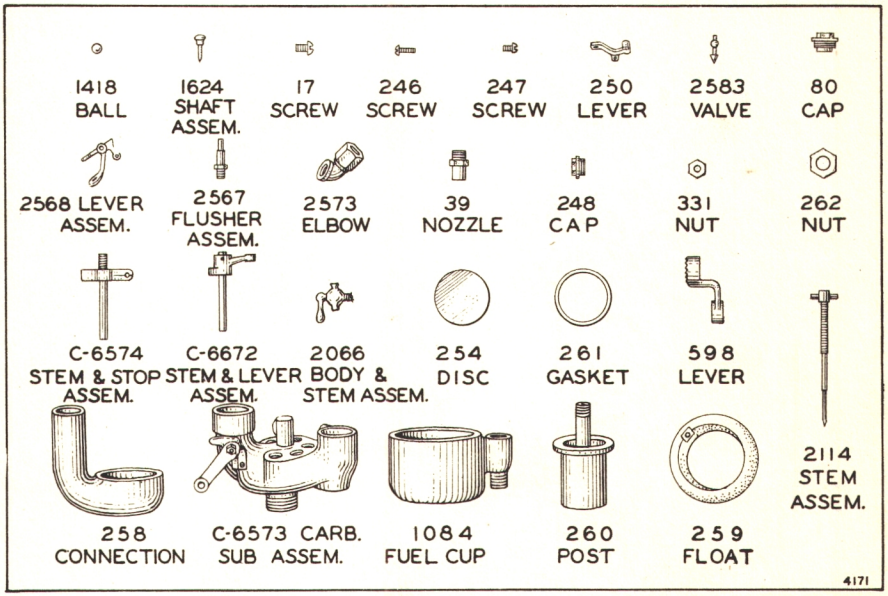


## CATERPILLAR NO. 9331

| PART No. | DESCRIPTION |
|---|---|
| ★ 13 | Screw, Float Lever |
| ★ 14 | Bushing, Float Clamp Screw |
| 17 | Lock Screw, Needle Stem |
| 39 | Spray Nozzle |
| 80 | Retainer Cap, Bronze Balls |
| 246 | Screw, Throttle Stop Adjusting |
| 247 | Clamp Screw, Throttle Adjusting Screw |
| 248 | Cup Cap, Float Valve |
| 250 | Float Lever |
| 254 | Throttle or Choke Disc |
| ★ 256 | Choke Spring |
| 258 | Constant Air Connection |
| 259 | Float Only |
| 260 | Post, Constant Air Connection |
| 261 | Gasket, Air Connection Post |
| 262 | Clamp Nut, Air Connection |
| 331 | Clamp Nut, Throttle Lever |
| ★ 549 | Nipple, Fuel Connection |
| ★ 550 | Nut, Fuel Connection |
| 598 | Throttle Lever |
| ★ 714 | Spring, Flusher |
| ★ 1049 | Gasket, Fuel Cup (Upper) |
| ★ 1064 | Staple, Choke or Throttle Disc |
| 1084 | Fuel Cup |
| ★ 1307 | Bushing, Throttle Stem |
| 1418 | Bronze Ball |
| 1624 | Assembly, Float Lever Shaft and Plub |
| 2066 | Assembly, Drain Body and Stem |
| 2114 | Assembly, Needle Stem |
| 2567 | Assembly, Flusher |
| 2568 | Assembly, Flusher Lever and Bracket |
| 2573 | Fuel Elbow |
| ★ 2576 | Assembly, Float |
| 2583 | Assembly, Fuel Valve |
| C-6573 | Sub Assembly, Carburetor |
| C-6574 | Assembly, Throttle Stem and Stop |
| C-6672 | Assembly, Choke Lever and Stem |

★ Not Shown in Illustration

Numbers shown are manufacturer's, not "Caterpillar" Part numbers, except when specified.

# KINGSTON CARBURETOR TYPE L2V, 2"

Manufacturer
KINGSTON PRODUCT CORPORATION
Kokomo, Indiana

For Parts Service on this Carburetor Order from the Manufacturer or his Representative

| PART No. | DESCRIPTION |
|---|---|
| 177 | Clamp Nut - Fuel Cup |
| 246 | Screw - Throttle Stop Adjusting |
| 247 | Lock Screw - Throttle Stop Adjusting |
| 254 | Throttle Disc |
| 256 | Choke Spring |
| 331 | Clamp Nut - Throttle Lever |
| 633 | Gasket - Fuel Cup (lower) |
| 639 | Seat - Fuel Valve |
| 641 | Fuel Cup |
| 642 | Gasket - Fuel Cup (upper) |
| 658 | Float only |
| 664 | Shaft - Float Lever |
| 676 | Drain Body |
| 686 | Gasket - Needle Stem Seat |
| 1034 | Clamp Nut - Float Lever Screw |
| 1064 | Staple - Choke or Throttle Disc |
| 1365 | Throttle Lever |
| 1413 | Clamp Screw - Float Lever |
| 1414 | Choke Disc |
| 1476 | Carburetor Sub Assembly |
| 1478 | Fuel Valve Assembly |
| 1479 | Throttle Stem and Post Assembly |
| 1481 | Air Valve Assembly |
| 1483 | Needle Stem Assembly |
| 1484 | Choke Lever and Stem Assembly |
| 1485 | Float Assembly |
| 1487 | Gasket - Fuel Valve Seat |
| 1499 | Bushing - Throttle Stem (closed end) |
| 1537 | Binder Nut - Needle Stem |
| 1540 | Packing - Needle Binder Nut |
| 1544 | Post - Needle Stem |
| 1545 | Packing - Throttle Stem |
| 1546 | Bushing - Throttle Stem (open end) |
| 1547 | Seat - Needle Stem |
| 1552 | Sleeve - Needle Binder Nut |
| 1572 | Drain Stem Assembly |
| 1621 | Air Valve Shaft and Plug Assembly |
| 1635 | Air Valve Stop Assembly |
| 1679 | Needle Stem and Post Assembly |
| 1695 | Float Lever and Bushing Assembly |
| 1696 | Drain Body and Stem Assembly |

Numbers shown are manufacturer's, not "Caterpillar" Part numbers, except when specified.

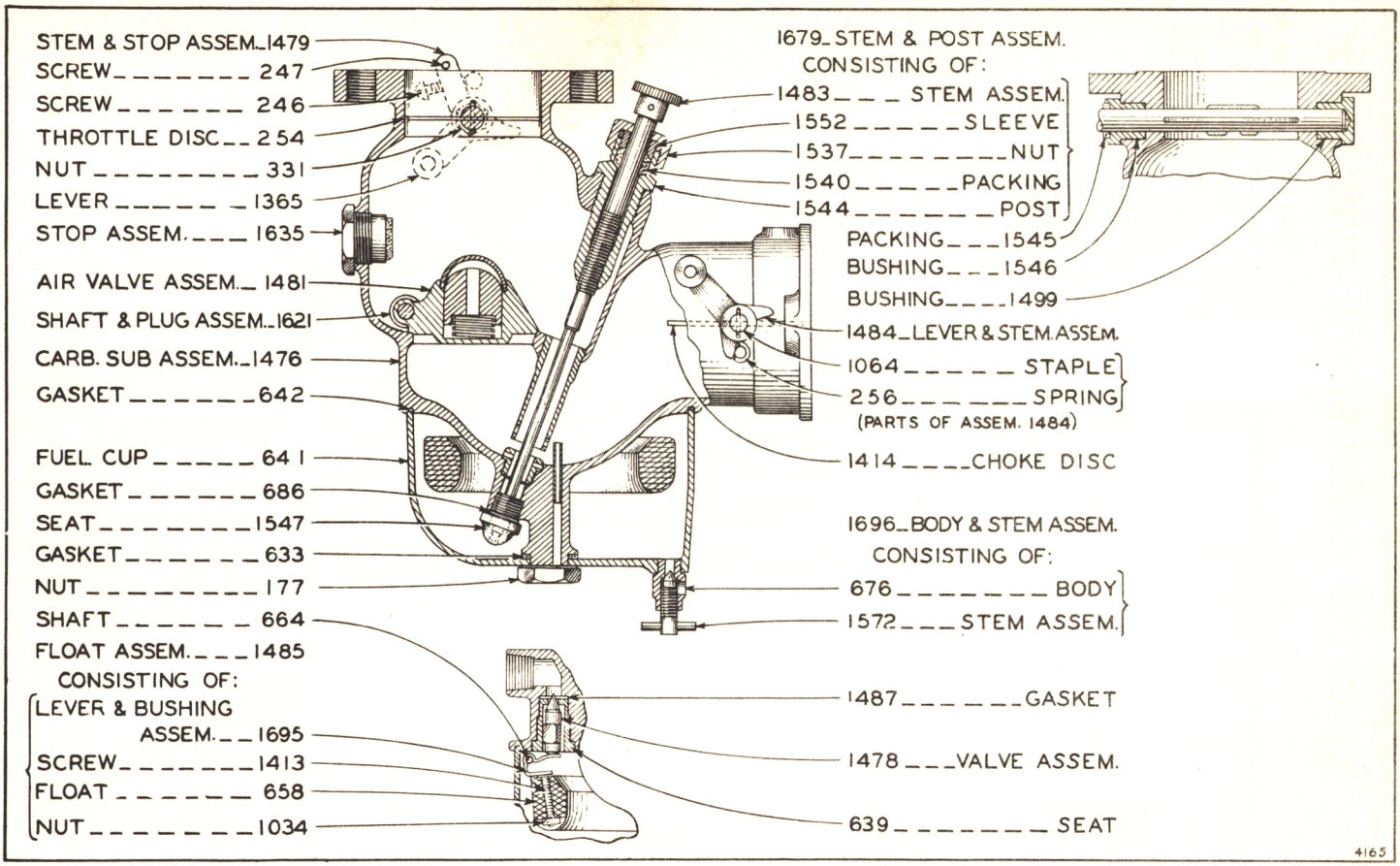


CATERPILLAR NO. 17908

# KINGSTON CARBURETOR TYPE L3, 1½"

Manufacturer
KINGSTON PRODUCT CORPORATION
Kokomo, Indiana

For Parts Service on this Carburetor Order from the Manufacturer or his Representative

| PART No. | DESCRIPTION |
|---|---|
| 13 | Clamp Screw - Float Lever |
| 32 | Bushing - Float Lever Clamp Screw |
| 118 | Cup Cap - Fuel Valve |
| 120 | Cap - Fuel Valve Lever |
| 142 | Gasket - Fuel Valve Seat |
| 177 | Clamp Nut - Fuel Cup |
| 433 | Float Only |
| 582 | Post-Needle Stem |
| 592 | Binder Nut - Needle Stem |
| 632 | Choke Spring |
| 633 | Gasket Fuel Cup (lower) |
| 634 | Gasket Fuel Cup (upper) |
| 676 | Drain Body |
| 774 | Seat - Fuel Valve |
| 874 | Fuel Cup |
| 940 | Throttle Lever |
| 1120 | Stop Screw - Throttle Lever Adj. |
| 1167 | Throttle Disc |
| 1168 | Choke Disc |
| 1367 | Air Valve |
| 1572 | Drain Stem Assembly |
| 1586 | Float Lever only |
| 1618 | Float Lever Shaft and Plug Assembly |
| 1623 | Air Valve Shaft and Plug Assembly |
| 1636 | Air Valve Stop Assembly |
| 1665 | Clamp Screw - Throttle Stop Adj. Screw |
| 1696 | Drain Body and Stem Assembly |
| 1791 | Float Assembly |
| 1793 | Carburetor Sub-Assembly |
| 1794 | Choke Lever and Stem Assembly |
| 1795 | Needle Stem Assembly |
| 1796 | Needle Stem and Post Assembly |
| 1801 | Fuel Valve Assembly |
| 2085 | Staple, Choke and Throttle Disc |
| 2388 | Clamp Nut - Throttle Lever |
| C6570 | Throttle Stem and Stop Assembly |

Numbers shown are manufacturer's, not "Caterpillar" Part numbers, except when specified.

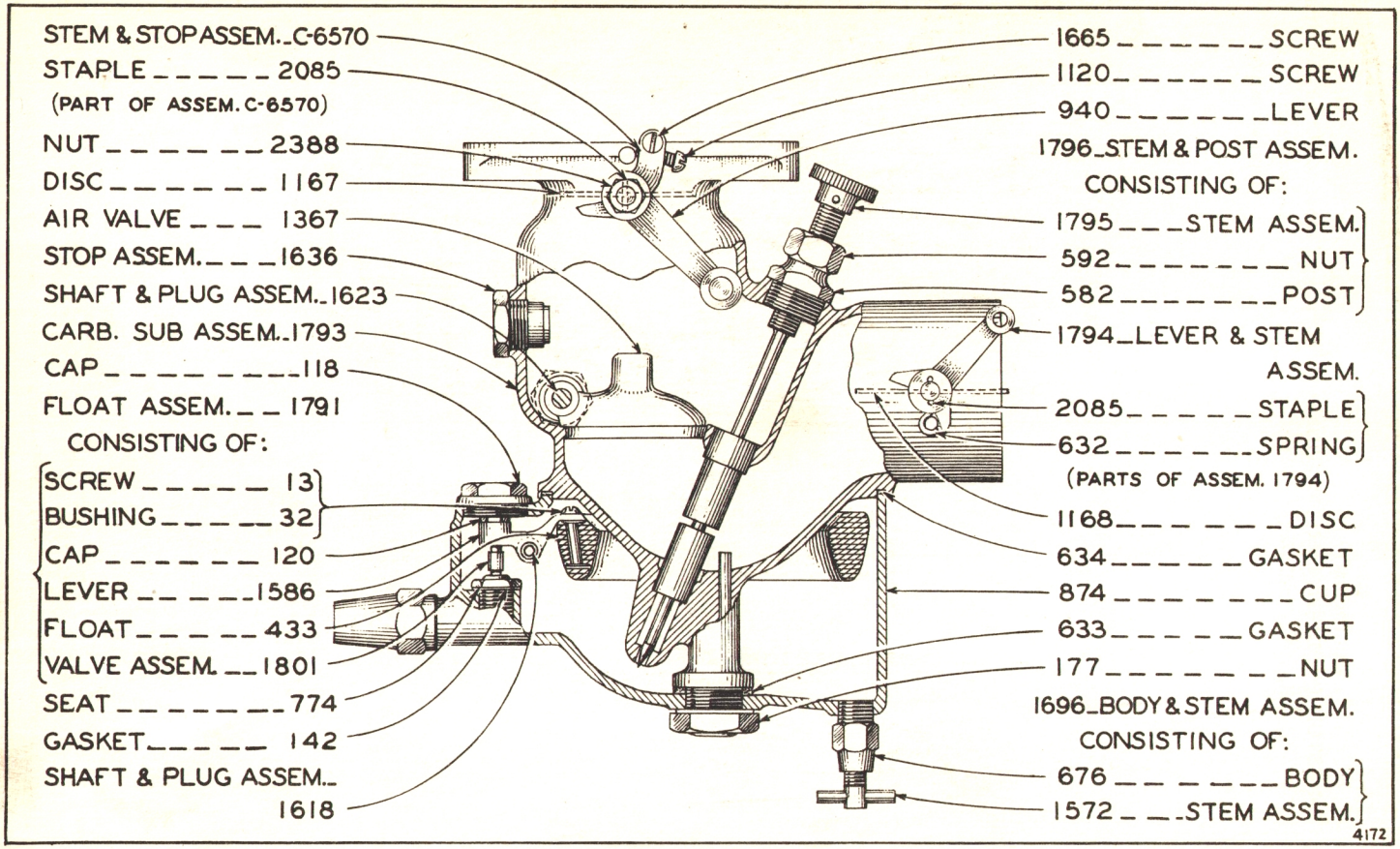


CATERPILLAR NO. 21395

# ENSIGN CARBURETOR—TYPE Gte, 2"

Manufacturer
ENSIGN CARBURETOR CO., LTD.
7010 S. Alameda Str. or 450 East Ohio Str.
Huntington Park, Calif. Chicago, Ill.

For Parts Service on this Carburetor Order from the Manufacturer or his Representative

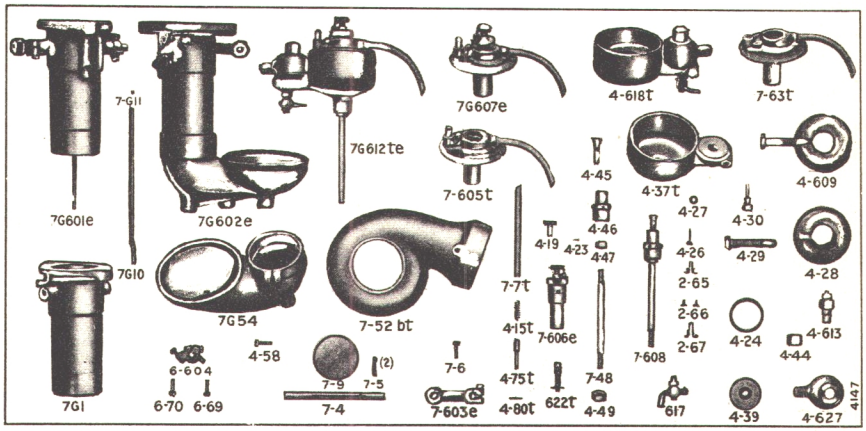


## CATERPILLAR NO. 1475-A

| PART No. | DESCRIPTION |
|---|---|
| 7G1 | Throttle tube |
| 7-4 | Throttle shaft |
| 7-5 | Throttle disc pins (2) |
| 7-6 | Throttle lever clamp screw |
| 7-7t | Pressure equalizing tube |
| 7-9 | Throttle disc |
| 7G10 | Starting tube |
| 7G11 | By-pass plug |
| 4-15t | Priming plunger spring |
| 4-19 | Air valve adjusting screw |
| 4-23 | Air adjusting stop pin |
| 4-24 | Strainer cage gasket |
| 4-26 | Float lever screw |
| 4-27 | Float lever screw washer |
| 4-28 | Cork float |
| 4-29 | Float lever |
| 4-30 | Float lever pivot |
| 4-37t | Fuel bowl |
| 4-39 | Strainer cage screen |
| 4-44 | Strainer cage nut |
| 4-45 | Suction tube |
| 4-46 | Suction outlet stud |
| 4-47 | Center stem lock nut |
| 7-48 | Center stem |
| 4-49 | Center stem nut |
| 7-52bt | No. 2 volute |
| 7G54 | Bottom ell |

| PART No. | DESCRIPTION |
|---|---|
| 4-58 | Bottom ell clamp screw |
| 7-63t | Fuel bowl cover |
| 2-65 | Fuel adjusting retainer |
| 2-66 | Retainer screws (2) |
| 2-67 | Air adjustment retainer |
| 6-69 | Throttle stop clamp screw |
| 6-70 | Throttle stop adjusting screw |
| 4-75t | Priming plunger |
| 4-80t | Priming plunger key |
| **Assemblies:** | |
| 7G601e | Throttle tube assembly |
| 7G602e | Throttle tube and bottom ell assembly |
| 7-603e | Throttle lever assembly |
| 6-604 | Throttle stop assembly |
| 7-605t | Fuel bowl cover assembly |
| 7-606e | Top control assembly |
| 7G607e | Fuel bowl cover and top control assembly |
| 7-608 | Suction outlet assembly |
| 4-609 | Cork float assembly |
| 7G612te | Complete fuel bowl assembly |
| 4-613 | Float valve assembly |
| 617 | Fuel bowl drain cock |
| 4-618t | Fuel bowl, float and valve assembly |
| 662t | Priming plunger assembly |
| 4-627 | Strainer cage assembly (¼" Male I.P.T.) |

Numbers shown are manufacturer's, not "Caterpillar" Part numbers, except when specified.

# ENSIGN CARBURETOR—TYPE Ae, 1¾"

Manufacturer
ENSIGN CARBURETOR CO., LTD.
7010 S. Alameda Str. or 450 East Ohio Str.
Huntington Park, Calif. Chicago, Ill.

For Parts Service on this Carburetor Order from the Manufacturer or his Representative

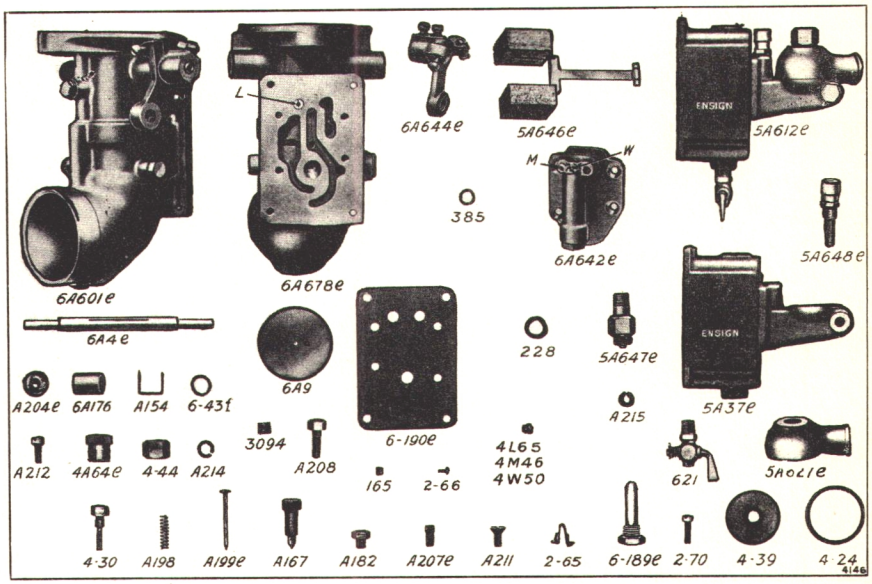


## ENSIGN NO. 6A600c

| PART No. | DESCRIPTION |
|---|---|
| 6A4e | Throttle shaft |
| 6A9 | Throttle disc |
| 4-24 | Strainer cage gasket |
| 4-30 | Float lever pivot |
| 5A37e | Fuel bowl |
| 4-39 | Strainer cage screen |
| 6-43f | ⅛" Welch plug |
| 4-44 | Strainer cage nut |
| 4A64e | Fuel adjusting screw |
| 2-65 | Adjustment retainer |
| 2-66 | Retainer screw (2) |
| 2-70 | Throttle stop adjusting screw (2) |
| A154 | Disc staple |
| 165 | Throttle by pass plug (3) (used only to Carb. 339212) |
| A167 | Idling adjusting screw |
| 6A176 | Throttle bearing bushing (2) spec. stainless steel |
| A182 | Economizer plug (used only to Carb. 339212) |
| 6-189e | Fuel orifice tube |
| 6-190e | Metering bracket gasket |
| A198 | Needle valve spring |
| A199e | Needle valve |
| A204e | Throttle dust washer |
| A207e | Throttle stop set screw (2) |

| PART No. | DESCRIPTION |
|---|---|
| A208 | Venturi screw |
| A211 | Metering bracket screw (4) |
| A212 | Fuel bowl screw (4) |
| A214 | Venturi screw lock washer |
| A215 | Fuel bowl screw lock washer (4) |
| 228 | 5/16" Welch plug |
| 385 | 1/4" Welch plug (4) |
| 3094 | 1/8" pipe plug (used only to Carb.339212) |
| **Bleeds:** | (See cut for location) |
| 4L65 | "L" bleed screw |
| 4M46 | "M" bleed screw |
| 4W50 | "W" bleed screw |
| **Assemblies:** | |
| 6A601e | Throttle tube assembly |
| 5A612e | Fuel bowl assembly |
| 621 | Drain cock |
| 5A627e | Strainer cage assembly (¼"Female I.P.T.) |
| 6A642e | Metering bracket assembly |
| 6A644e | Throttle stop lever assembly |
| 5A646e | Cork float assembly |
| 5A647e | Float valve assembly |
| 5A648e | Priming plunger assembly |
| 6A678e | Throttle tube with venturi assembly |

Numbers shown are manufacturer's, not "Caterpillar" Part numbers, except when specified.

# ENSIGN CARBURETOR—TYPE Aea, 1¾"

Manufacturer
ENSIGN CARBURETOR CO., LTD.
7010 S. Alameda Str. or 450 East Ohio Str.
Huntington Park, Calif. Chicago, Ill.

For Parts Service on this Carburetor Order from the Manufacturer or his Representative

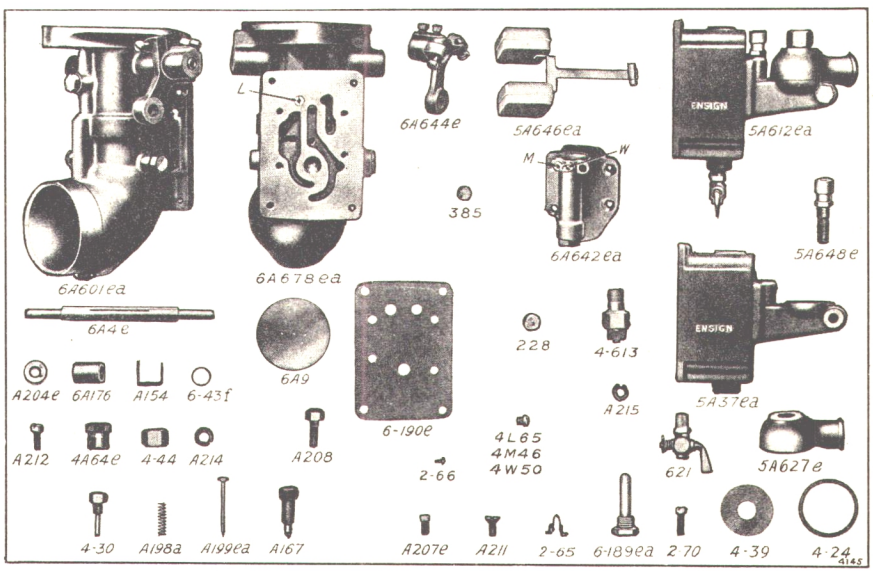


## ENSIGN NO. 6A600ea

| PART No. | DESCRIPTION |
|---|---|
| 6A4e | Throttle shaft |
| 6A9 | Throttle disc |
| 4-24 | Strainer cage gasket |
| 4-30 | Float lever pivot |
| 5A37ea | Fuel bowl |
| 4-39 | Strainer cage screen |
| 6-43f | 1/2" Welch plug |
| 4-44 | Strainer cage nut |
| 4A64e | Fuel adjusting screw |
| 2-65 | Adjustment retainer |
| 2-66 | Retainer screws (2 used in Carb.) |
| 2-70 | Throttle stop adjusting screw (2 used in Carb.) |
| A154 | Disc staple |
| A167 | Idling adjusting screw |
| 6A176 | Throttle bearing bushing (2 used in Carb.) |
| 6-189ea | Fuel orifice tube |
| 6-190e | Metering bracket gasket |
| A198a | Needle valve spring |
| A199ea | Needle valve |
| A204e | Throttle dust washer |
| A207e | Throttle stop set screws (2 used in Carb.) |
| A208 | Venturi screw |

| PART No. | DESCRIPTION |
|---|---|
| A211 | Metering bracket screws (4 used in Carb.) |
| A212 | Fuel bowl screws (4 used in Carb.) |
| A214 | Venturi screw lock washer |
| A215 | Fuel bowl screw lock washer (4 used in Carb.) |
| 228 | 5/16" Welch plug |
| 385 | 1/4" Welch plugs (4 used in Carb.) |
| Bleeds: | (See cut for location) |
| 4L65 | "L" bleed screw |
| 4M46 | "M" bleed screw |
| 4W50 | "W" bleed screw |
| Assemblies: | |
| 6A601ea | Throttle tube assembly |
| 5A612ea | Fuel bowl assembly |
| 4-613 | Float valve assembly |
| 621 | Drain cock |
| 5A627e | Strainer cage assembly |
| 6A642ea | Metering bracket assembly |
| 6A644e | Throttle stop-lever assembly |
| 5A646ea | Metal float assembly |
| 5A648e | Priming plunger assembly |
| 6A678ea | Throttle tube with venturi assembly |

Numbers shown are manufacturer's, not "Caterpillar" Part numbers, except when specified.

# ENSIGN CARBURETOR—TYPE AAe, 1¾"

Manufacturer
ENSIGN CARBURETOR CO., LTD.
7010 S. Alameda Str. or 450 East Ohio Str.
Huntington Park, Calif. Chicago, Ill.

For Parts Service on this Carburetor Order from the Manufacturer or his Representative

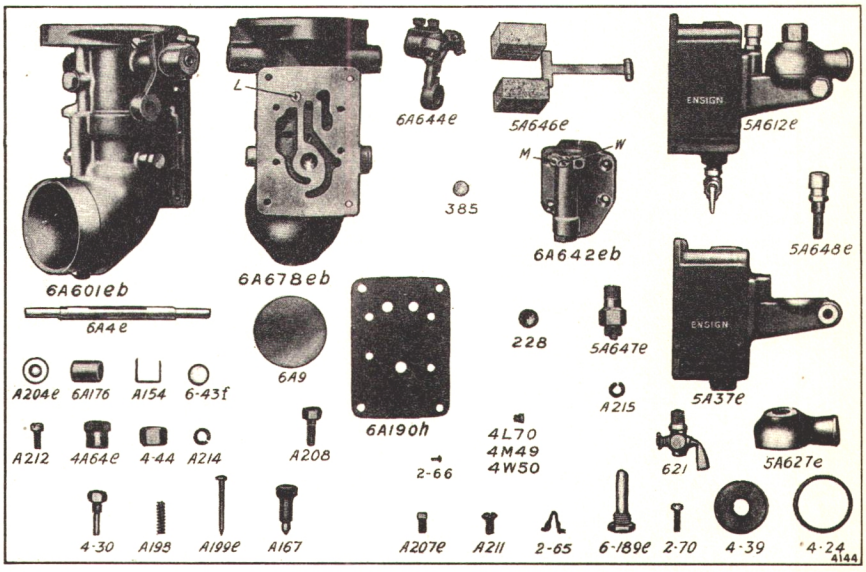


## CATERPILLAR NO. 2836-A

| PART No. | DESCRIPTION |
|---|---|
| 6A4e | Throttle shaft |
| 6A9 | Throttle disc |
| 4-24 | Strainer cage gasket |
| 4-30 | Float lever pivot |
| 5A37e | Fuel bowl |
| 4-39 | Strainer cage screen |
| 6-43f | 1/2" Welch plug |
| 4-44 | Strainer cage nut |
| 4A64e | Fuel adjusting screw |
| 2-65 | Adjustment retainer |
| 2-66 | Retainer screw (2) |
| 2-70 | Throttle stop adjusting screw (2) |
| A154 | Disc staple |
| A167 | Idling adjusting screw |
| 6A176 | Throttle bearing bushing (2); spec. stainless steel |
| 6-189e | Fuel orifice tube |
| 3A190h | Metering bracket gasket |
| A198 | Needle valve spring |
| A199e | Needle valve |
| A204e | Throttle dust washer |
| A207e | Throttle stop set screw (2) |
| A208 | Venturi screw |

| PART No. | DESCRIPTION |
|---|---|
| A211 | Metering bracket screws (4) |
| A212 | Fuel bowl screw (4) |
| A214 | Venturi screw lock washer |
| A215 | Fuel bowl screw lock washer (4) |
| 228 | 5/16" Welch plug |
| 385 | 1/4" Welch plug (4) |
| **Bleeds:** | (See cut for location) |
| 4L70 | "L" bleed screw |
| 4M49 | "M" bleed screw |
| 4W50 | "W" bleed screw |
| **Assemblies:** | |
| 6A601eb | Throttle tube assembly |
| 5A612e | Fuel bowl assembly |
| 621 | Drain cock |
| 5A627e | Strainer cage assembly (¼"Female I.P.T.) |
| 6A642eb | Metering bracket assembly |
| 6A644e | Throttle stop lever assembly |
| 5A646e | Cork float assembly |
| 5A647e | Float valve assembly |
| 5A648e | Priming plunger assembly |
| 6A678eb | Throttle tube with venturi assembly |

For Drain Filter see Page 17

Numbers shown are manufacturer's, not "Caterpillar" Part numbers, except when specified.

# ENSIGN CARBURETOR—TYPE AAea, 1¾"

Manufacturer
ENSIGN CARBURETOR CO., LTD.
7010 S. Alameda Str. or 450 East Ohio Str.
Huntington Park, Calif. Chicago, Ill.

For Parts Service on this Carburetor Order from the Manufacturer or his Representative

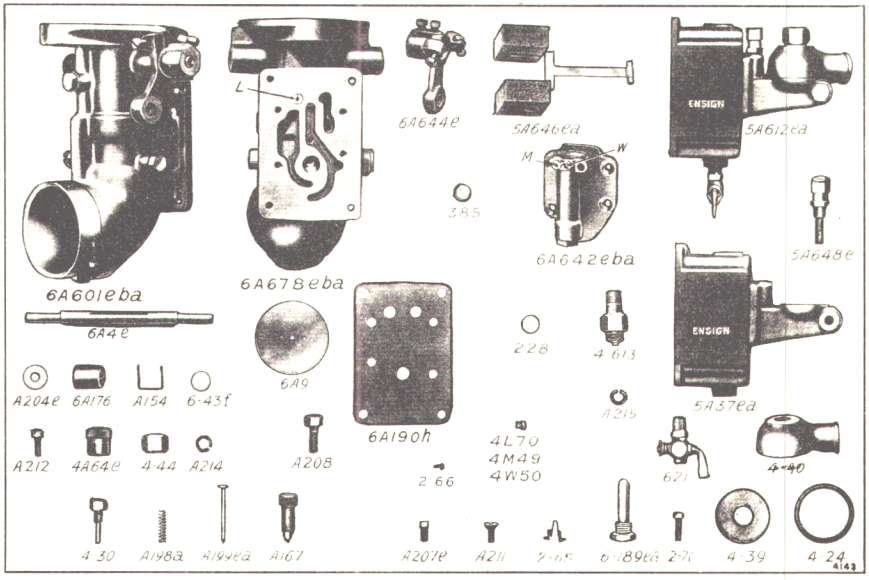


## CATERPILLAR NO. 3546-A

| PART No. | DESCRIPTION |
|---|---|
| 6A4e | Throttle shaft |
| 6A9 | Throttle disc |
| 4-24 | Strainer cage gasket |
| 4-30 | Float lever pivot |
| 5A37ea | Fuel bowl |
| 4-39 | Strainer cage screen |
| 6-43f | 1/2" Welch plug |
| 4-44 | Strainer cage nut |
| 4A64e | Fuel adjusting screw |
| 2-65 | Adjustment retainer |
| 2-66 | Retainer screw (2) |
| 2-70 | Throttle stop adjusting screw (2) |
| A154 | Disc staple |
| A167 | Idling adjusting screw |
| 6A176 | Throttle bearing bushing (2); spec. stainless steel |
| 6-189ea | Fuel orifice tube |
| 6A190h | Metering bracket gasket |
| A193a | Needle valve spring |
| A199ea | Needle valve |
| A204e | Throttle dust washer |
| A207e | Throttle stop set screw (2) |
| A208 | Venturi screw |

| PART No. | DESCRIPTION |
|---|---|
| A211 | Metering bracket screw (4) |
| A212 | Fuel bowl screw (4) |
| A214 | Venturi screw lock washer |
| A215 | Fuel bowl screw lock washer (4) |
| 228 | 5/16" Welch plug |
| 385 | 1/4" Welch plug (4) |
| Bleeds: | (See cut for location) |
| 4L70 | "L" bleed screw |
| 4M49 | "M" bleed screw |
| 4W50 | "W" bleed screw |
| Assemblies: | |
| 6A601eba | Throttle tube assembly |
| 5A612ea | Fuel bowl assembly |
| 621 | Drain cock |
| 5A627e | Strainer cage assembly (¼"Female I.P.T.) |
| 6A642eba | Metering bracket assembly |
| 6A644e | Throttle stop lever assembly |
| 5A646ea | Metal float assembly |
| 4-613 | Float valve assembly |
| 5A648e | Priming plunger assembly |
| 6A678eba | Throttle tube with venturi assembly |

For Drain Filter see Page 17

Numbers shown are manufacturer's, not "Caterpillar" Part Numbers, except when specified.

# ENSIGN CARBURETOR—TYPE Ke, 1½"

Manufacturer
ENSIGN CARBURETOR CO., LTD.
7010 S. Alameda Str. or 450 East Ohio Str.
Huntington Park, Calif. Chicago, Ill.

For Parts Service on this Carburetor Order from the Manufacturer or his Representative

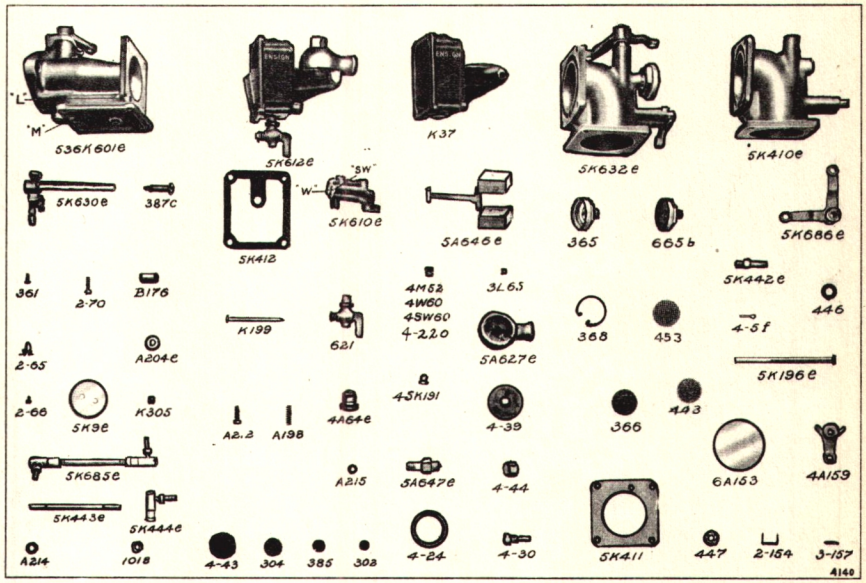


## CATERPILLAR NO. 1A-8950

| PART No. | DESCRIPTION |
|---|---|
| 4-5f | Cotter pin |
| 5K9e | Throttle disc |
| 4-24 | Strainer cage gasket |
| 4-30 | Float lever pivot |
| K37 | Fuel bowl |
| 4-39 | Strainer cage screen |
| 4-43 | 7/16" Welch plug |
| 4-44 | Strainer cage nut |
| 4A64e | Fuel adjustment screw |
| 2-65 | Idle adjustment retainer |
| 2-66 | Retainer screws (2 used in Carb.) |
| 2-70 | Throttle stop adjusting screw |
| 6A153 | Choke disc |
| 2-154 | Disc staple |
| 3-157 | Choke lever pin |
| 4A159 | Choke lever |
| B176 | Throttle bearing bushings (2 used in Carb.) |
| 45K191 | Fuel orifice |
| 5K196e | Choke shaft and head |
| A193 | Needle valve spring |
| K199 | Needle valve |
| A204e | Throttle dust washer |
| A212 | Fuel control to fuel bowl screw |
| A212 | Fuel bowl screws (4 used in fuel bowl) |
| A212 | Air horn screws (4 used in air horn) |
| A214 | ¼" lock washers (2 used in Carb.) |
| A215 | Fuel bowl screw lock washers (4 used in fuel bowl) |
| A215 | Air horn screw lock washers (4 used in air horn) |
| 4-220 | Screw plugs (2 used in fuel control) |
| 302 | 3/16" Welch plugs (5 used in throttle tube) |
| 304 | 3/8" Welch plug |
| K305 | Nozzle passage bushing |
| 361 | Throttle shaft screws (2 used in Carb.) |
| 365 | Drain filter body |

| PART No. | DESCRIPTION |
|---|---|
| 366 | Drain filter felt |
| 368 | Drain filter ring |
| 385 | ¾" Welch plugs (4 used in Carb.) |
| 387c | Idle adjustment screw |
| 5K410e | Air horn |
| 5K411 | Air horn gasket |
| 5K412 | Fuel bowl gasket |
| 5K442e | Bell crank stud |
| 5K443e | Bell joint rod |
| 5K444e | ¼"-28 Ball joints (2 used in Carb.) |
| 446 | Brass washer No. 18 |
| 447 | Choke dust washer |
| 453 | Drain filter screen |
| 1018 | Hex. nuts (4 used in Carb.) |

Bleeds: (See cut for location

| | |
|---|---|
| 3L65 | "L" bleed screw |
| 4M52 | "M" bleed screw |
| 4SW60 | "SW" bleed screw (can use for 4W60) |
| 4W60 | "W" bleed screw (can use for 4SW60) |

Assemblies:

| | |
|---|---|
| 536K601e | Throttle tube assembly |
| 5K610e | Fuel control assembly |
| 5K612e | Fuel bowl assembly |
| 621 | Drain cock |
| 5A627e | Strainer cage assembly |
| 5K630e | Throttle shaft and stop lever assembly |
| 5K632e | Air horn assembly |
| 5A646e | Cork float assembly |
| 5A647e | Float valve assembly |
| 665b | Drain filter assembly |
| 671 | Drain filter wire screen assembly |
| 5K685e | Ball joints and rod assembly |
| 5K686e | Bell crank and bushing |

Numbers shown are manufacturer's, not "Caterpillar" Part numbers, except when specified.

# ENSIGN CARBURETOR—TYPE AeSc, 1¼"

Manufacturer
ENSIGN CARBURETOR CO., LTD.
7010 S. Alameda Str. or 450 East Ohio Str.
Huntington Park, Calif. Chicago, Ill.

For Parts Service on this Carburetor Order from the Manufacturer or his Representative

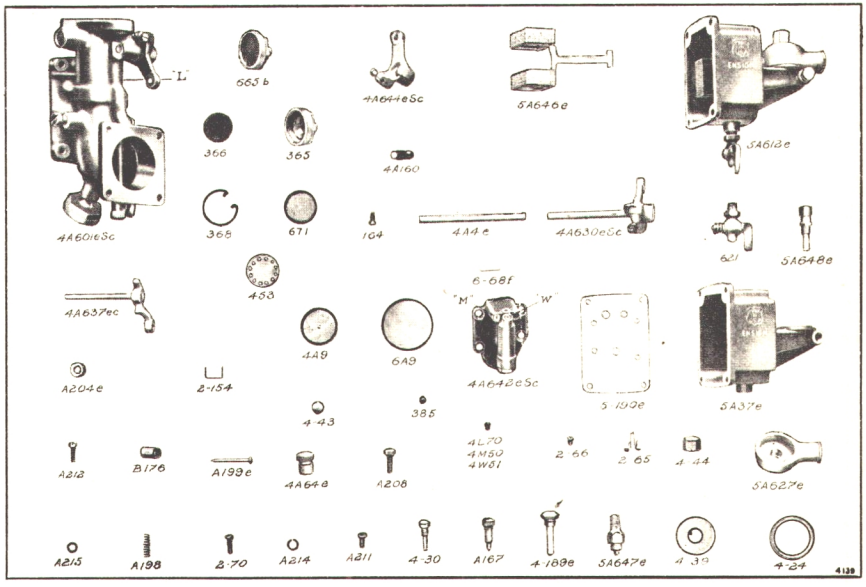


## CATERPILLAR 1A9911

| PART No. | DESCRIPTION |
|---|---|
| 4A4e | Throttle shaft |
| 4A9 | Throttle disc |
| 6A9 | Choke disc |
| 4-24 | Strainer cage gasket |
| 4-30 | Float lever pivot |
| 5A37e | Fuel bowl |
| 4-39 | Strainer cage screen |
| 4-43 | 7/16" Welch plug |
| 4-44 | Strainer cage nut |
| 4A64e | Fuel adjusting screw |
| 2-65 | Adjustment retainer |
| 2-66 | Retainer screws (2 used in Carb.) |
| 6-68f | Throttle stop pin |
| 2-70 | Throttle stop adjusting screw |
| 2-154 | Disc staple (2 used in carburetor) |
| 4A160 | Choke shaft support |
| 164 | Choke shaft support screw |
| A167 | Idling adjustment screw |
| B176 | Throttle bearing bushing (2 used in Carb.) |
| 4-189e | Fuel Orifice tube |
| 5-190e | Metering bracket gasket (same as 6A190h) |
| A198 | Needle valve spring |
| A199e | Needle valve |
| A204e | Throttle dust washer |
| A208 | Venturi screw |
| A211 | Metering bracket screws (4 used in Carb.) |
| A212 | Fuel bowl screws (4 used in Carb.) |
| A214 | Venturi screw lock washer |

| PART No. | DESCRIPTION |
|---|---|
| A215 | Fuel bowl screw lock washer (4 used in Carb.) |
| 365 | Drain filter body |
| 366 | Drain filter felt |
| 368 | Drain filter ring |
| 385 | 1/4" Welch plug (4 used in Carb.) |
| 453 | Drain filter screen |
| **Bleeds:** | |
| 4L70 | "L" bleed screw |
| 4M50 | "M" bleed screw |
| 4W51 | "W" bleed screw |
| **Assemblies:** | |
| 4A601eSc | Throttle tube assembly |
| 5A612e | Fuel bowl assembly |
| 621 | Drain cock |
| 5A627e | Strainer cage assembly |
| 4A630eSc | Throttle shaft and stop lever assembly |
| 4A637ec | Choke shaft & stop lever assembly |
| 4A642eSc | Metering bracket assembly |
| 4A644eSc | Throttle stop lever assembly |
| 5A646e | Cork float assembly |
| 5A647e | Float valve assembly |
| 5A648e | Priming plunger assembly |
| 665b | Drain filter assembly |
| 671 | Drain filter wire screen assembly |

Numbers shown are manufacturer's, not "Caterpillar" Part numbers, except when specified.

# ENSIGN CARBURETOR—TYPE Gte, 1½"

Manufacturer
ENSIGN CARBURETOR CO., LTD.
7010 S. Alameda Str. or 450 East Ohio Str.
Huntington Park, Calif. Chicago, Ill.

For Parts Service on this Carburetor Order from the Manufacturer or his Representative

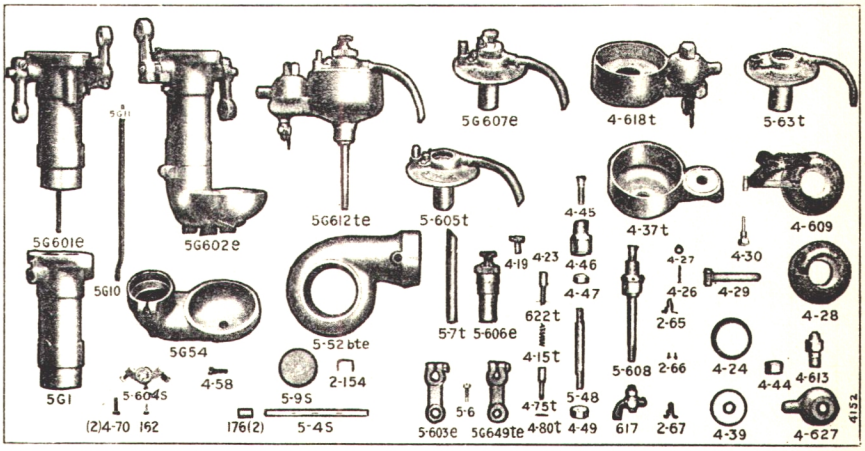


## CATERPILLAR NO. S-729

| PART No. | DESCRIPTION |
|---|---|
| 5G1 | Throttle tube |
| 5-4s | Throttle shaft |
| 5-6 | Throttle lever clamp screw |
| 5-7t | Pressure equalizing tube |
| 5-9x | Throttle disc |
| 5G10 | Starting tube |
| 5G11 | By-pass plug |
| 4-15t | Priming plunger spring |
| 4-19 | Air valve adjusting screw |
| 4-23 | Air adjusting stop pin |
| 4-24 | Strainer cage gasket |
| 4-26 | Float lever screw |
| 4-27 | Float lever screw washer |
| 4-28 | Cork float |
| 4-29 | Float lever |
| 4-30 | Float lever pivot |
| 4-37t | Fuel bowl |
| 4-39 | Strainer cage screen |
| 4-44 | Strainer cage nut |
| 4-45 | Suction tube |
| 4-46 | Suction outlet stud |
| 4-47 | Center stem lock nut |
| 5-48 | Center stem |
| 4-49 | Center stem nut |
| 5-52bte | No. 2 volute |
| 5G54 | Bottom ell |
| 4-58 | Bottom ell clamp screw |
| 5-63t | Fuel bowl cover |

| PART No. | DESCRIPTION |
|---|---|
| 2-65 | Fuel adjustment retained |
| 2-66 | Retainer screws (2) |
| 2-67 | Air adjustment retainer |
| 4-70 | Throttle stop adjusting screws (2) |
| 4-75t | Priming plunger |
| 4-80t | Priming plunger key |
| 2-154 | Disc staple |
| 162 | Throttle stop set screw |
| 176 | Throttle bearing bushings (2) |

Assemblies:

| | |
|---|---|
| 5G601e | Throttle tube assembly |
| 5G602e | Throttle tube and bottom ell assembly |
| 5-603es | Throttle lever assembly |
| 5-604es | Throttle stop assembly |
| 5-605t | Fuel bowl cover assembly |
| 5-606e | Top control assembly |
| 5G607e | Fuel bowl cover and top control assembly |
| 5-608 | Suction outlet assembly |
| 4-609 | Cork float assembly |
| 5G612te | Complete fuel bowl assembly |
| 4-613 | Float valve assembly |
| 617 | Fuel bowl drain cock |
| 4-618t | Fuel bowl, float and valve assembly |
| 622t | Priming plunger assembly |
| 4-627 | Strainer cage assembly (¼"Male I.P.T.) |
| 5G649te | Hot spot control lever assembly |

Numbers shown are manufacturer's, not "Caterpillar" Part numbers, except when specified.

# ENSIGN CARBURETOR—TYPE Ete, 1½"

Manufacturer
ENSIGN CARBURETOR CO., LTD.
7010 S. Alameda Str. or 450 East Ohio Str.
Huntington Park, Calif. Chicago, Ill.

For Parts Service on this Carburetor Order from the Manufacturer or his Representative

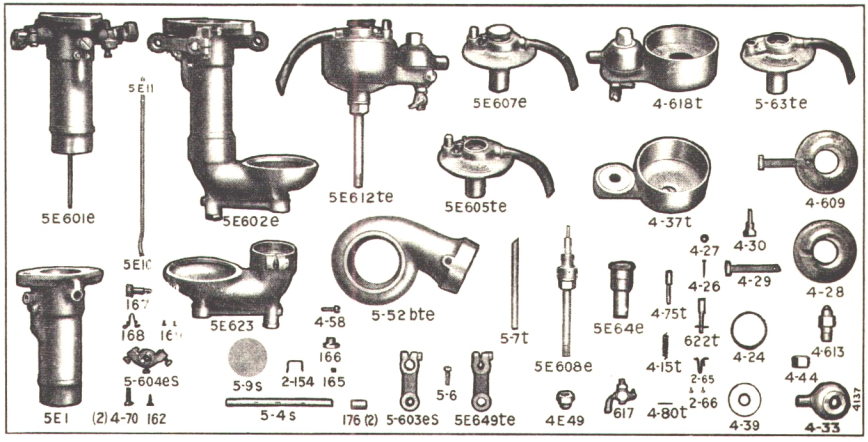


## ENSIGN NO. 5E600te

| PART No. | DESCRIPTION |
|---|---|
| 5E1 | Throttle tube |
| 5-4s | Throttle shaft |
| 5-6 | Throttle lever clamp screw |
| 5-7t | Pressure equalizing tube |
| 5-9s | Throttle disc |
| 5E10 | By-pass tube |
| 5E11 | By-pass plug |
| 4-15t | Primer plunger spring |
| 4-24 | Strainer cage gasket |
| 4-26 | Float lever screw |
| 4-27 | Float lever screw washer |
| 4-28 | Cork float |
| 4-29 | Float lever |
| 4-30 | Float lever pivot |
| 4-37t | Fuel bowl |
| 4-39 | Strainer cage screen |
| 4-44 | Strainer cage nut |
| 4E49 | Suction stem nut |
| 5-52bte | No. 2 volute |
| 4-58 | Bottom ell clamp screw |
| 5-63te | Fuel bowl cover |
| 5E64e | Fuel adjusting screw |
| 2-65 | Adjustment retainer |
| 2-66 | Retainer screws (2 used in Carb.) |
| 4-70 | Throttle stop adjusting screws (2 used in Carb.) |
| 4-75t | Priming plunger |
| 4-80t | Priming plunger key |

| PART No. | DESCRIPTION |
|---|---|
| 2-154 | Disc staple |
| 162 | Throttle stop set screw |
| 165 | Throttle by-pass plug |
| 166 | Sump plug |
| 167 | Idling adjustment screw |
| 168 | Idling adjustment retainer |
| 169 | Idling adjustment retainer screws (2 used in Carb.) |
| 176 | Throttle bearing bushings (2 used in Carb.) |

Assemblies:

| | |
|---|---|
| 5E601e | Throttle tube assembly |
| 5E602e | Throttle tube and bottom ell assembly |
| 5-603es | Throttle lever assembly |
| 5-604es | Throttle stop assembly |
| 5E605te | Fuel bowl cover assembly |
| 5E607e | Fuel bowl cover and top control assembly |
| 5E608e | Suction outlet assembly |
| 4-609 | Cork float assembly |
| 5E612te | Complete fuel bowl assembly |
| 4-613 | Float valve assembly |
| 617 | Fuel bowl drain cock |
| 4-618t | Fuel bowl, float and valve assembly |
| 622t | Priming plunger assembly |
| 5E623 | Bottom ell assembly |
| 4-627 | Strainer cage assembly (¼"Male I.P.T.) |
| 5E649te | Hot spot control lever assembly |

Numbers shown are manufacturer's, not "Caterpillar" Part numbers.

# ENSIGN CARBURETOR—TYPE Ae, 1½"

Manufacturer
ENSIGN CARBURETOR CO., LTD.
7010 S. Alameda Str. or 450 East Ohio Str.
Huntington Park, Calif. Chicago, Ill.

For Parts Service on this Carburetor Order from the Manufacturer or his Representative

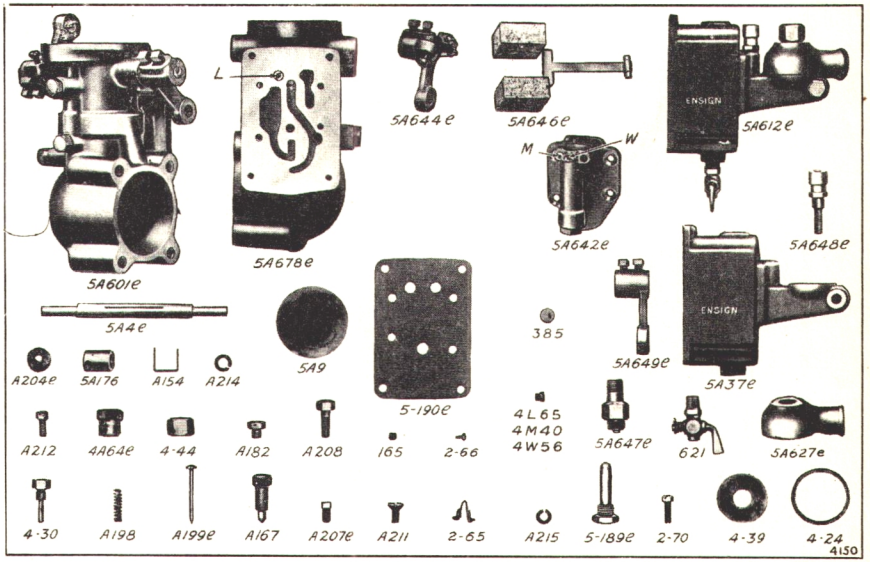


## CATERPILLAR NO. S-1739

| PART No. | DESCRIPTION |
|---|---|
| 5A4e | Throttle shaft |
| 5A9 | Throttle disc |
| 4-24 | Strainer cage gasket |
| 4-30 | Float lever pivot |
| 5A37e | Fuel bowl |
| 4-39 | Strainer cage screen |
| 4-44 | Strainer cage nut |
| 4A64e | Fuel adjusting screw |
| 2-65 | Adjustment retainer |
| 2-66 | Retainer screw (2) |
| 2-70 | Throttle stop adjusting screw (2) |
| A154 | Disc staple |
| 165 | Throt. by-pass plug (3) (used only to Carb. 339168) |
| A167 | Idling adjusting screw |
| 5A176 | Throttle bearing bushing (2); spec. stainless steel |
| A182 | Economizer plug (used only to Carb. 339168) |
| 5-189e | Fuel orifice tube |
| 5-190e | Metering bracket gasket |
| A198 | Needle valve spring |
| A199e | Needle valve |
| A204e | Throttle dust washer (2) |
| A207e | Throttle stop set screw (2) |

| PART No. | DESCRIPTION |
|---|---|
| A208 | Venturi screw |
| A211 | Metering bracket screw (4) |
| A212 | Fuel bowl screw (4) |
| A214 | Venturi screw lock washer |
| A215 | Fuel bowl screw lock washer (4) |
| 385 | 1/4" Welch plug (4) |
| **Bleeds:** | (See cut for location) |
| 4L65 | "L" bleed screw |
| 4M40 | "M" bleed screw |
| 4W56 | "W" bleed screw |
| **Assemblies:** | |
| 5A601e | Throttle tube assembly |
| 5A612e | Fuel bowl assembly |
| 621 | Drain cock |
| 5A627e | Strainer cage assembly (¼"Female I.P.T.) |
| 5A642e | Metering bracket assembly |
| 5A644e | Throttle stop lever assembly |
| 5A646e | Cork float assembly |
| 5A647e | Float valve assembly |
| 5A648e | Priming plunger assembly |
| 5A649e | Hot-spot control lever assembly |
| 5A678e | Throttle tube with venturi assembly |

Numbers shown are manufacturer's, not "Caterpillar" Part numbers, except when specified

# ENSIGN CARBURETOR—TYPE Aea, 1½"

Manufacturer
ENSIGN CARBURETOR CO., LTD.
7010 S. Alameda Str. or 450 East Ohio Str.
Huntington Park, Calif. Chicago, Ill.

For Parts Service on this Carburetor Order from the Manufacturer or his Representative

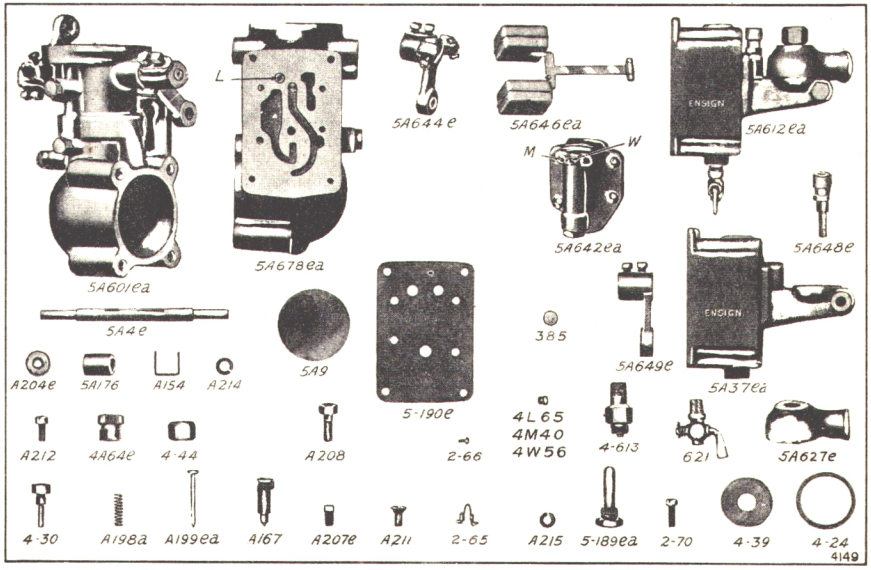


## ENSIGN NO. 5A600ea

| PART No. | DESCRIPTION |
|---|---|
| 5A4e | Throttle shaft |
| 5A9 | Throttle disc |
| 4-24 | Strainer cage gasket |
| 4-30 | Float lever pivot |
| 5A37ea | Fuel bowl |
| 4-39 | Strainer cage screen |
| 4-44 | Strainer cage nut |
| 4A64e | Fuel adjusting screw |
| 2-65 | Adjustment retainer |
| 2-66 | Retainer screws (2) |
| 2-70 | Throttle stop adjusting screw |
| A154 | Disc staple |
| A167 | Idling adjusting screw |
| 5A176 | Throttle bearing bushing (2) special stainless steel |
| 5-189ea | Fuel orifice tube |
| 5-190e | Metering bracket gasket |
| A198a | Needle valve spring |
| A199ea | Needle valve |
| A204e | Throttle dust washer (2) |
| A207e | Throttle stop set screw (2) |
| A208 | Venturi screw |
| A211 | Metering bracket screws (4) |

| PART No. | DESCRIPTION |
|---|---|
| A212 | Fuel bowl screw (4) |
| A214 | Venturi screw lock washer |
| A215 | Fuel bowl screw lock washer (4) |
| 385 | 1/4" Welch plug (4) |
| Bleeds: | (See cut for location) |
| 4L65 | "L" bleed screw |
| 4M40 | "M" bleed screw |
| 4W56 | "W" bleed screw |
| Assemblies: | |
| 5A601ea | Throttle tube assembly |
| 5A612ea | Fuel bowl assembly |
| 621 | Drain cock |
| 5A627e | Strainer cage assembly (¼"Female I.P.T.) |
| 5A642ea | Metering bracket assembly |
| 5A644e | Throttle stop lever assembly |
| 5A646ea | Metal float assembly |
| 4-613 | Float valve assembly |
| 5A648e | Priming plunger assembly |
| 5A649e | Hot spot control lever assembly |
| 5A678ea | Throttle tube with venturi assembly |

Numbers shown are manufacturer's, not "Caterpillar" Part numbers, except when specified.

# ENSIGN CARBURETOR—TYPE AeS, 1¼"

Manufacturer
ENSIGN CARBURETOR CO., LTD.
7010 S. Alameda Str. or 450 East Ohio Str.
Huntington Park, Calif. Chicago, Ill.

For Parts Service on this Carburetor Order from the Manufacturer or his Representative

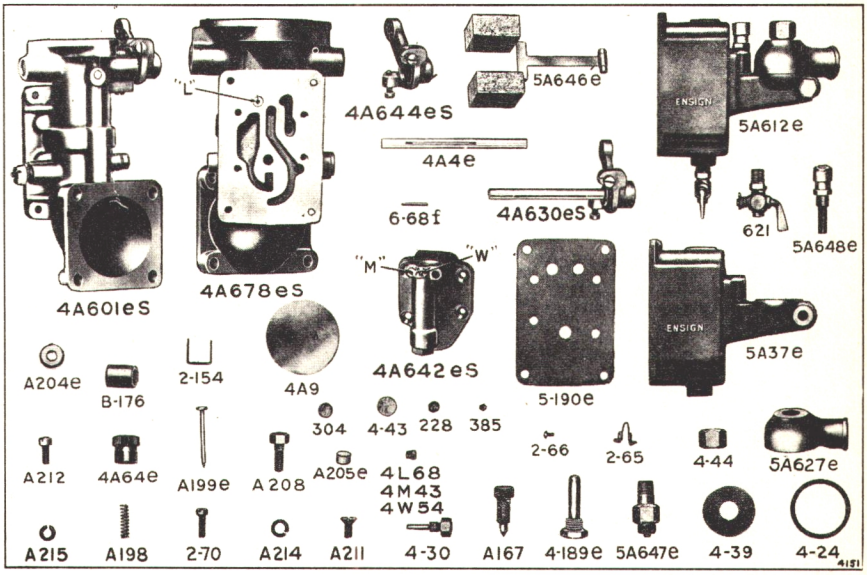


## CATERPILLAR NO. S-2354

| PART No. | DESCRIPTION |
|---|---|
| 4A4e | Throttle shaft |
| 4A9 | Throttle disc |
| 4-24 | Strainer cage gasket |
| 4-30 | Float lever pivot |
| 5A37e | Fuel bowl |
| 4-39 | Strainer cage screen |
| 4-43 | 7/16" Welch plug |
| 4-44 | Strainer cage nut |
| 4A64e | Fuel adjusting screw |
| 2-65 | Adjustment retainer |
| 2-66 | Retainer screws (2) |
| 6-68f | Throttle stop pin |
| 2-70 | Throttle stop adjusting screw (2) |
| 2-154 | Disc staple |
| A167 | Idling adjusting screw |
| B-176 | Throttle bearing bushing (2) special stainless steel |
| 4-189e | Fuel orifice tube |
| 5-190e | Metering bracket gasket |
| A198 | Needle valve spring |
| A199e | Needle valve |
| A204e | Throttle dust washer |
| A205e | Drain dust plug |
| A208 | Venturi screw |
| A211 | Metering bracket screws (4) |

| PART No. | DESCRIPTION |
|---|---|
| A212 | Fuel bowl screws (4) |
| A214 | Venturi screw lock washer |
| A215 | Fuel bowl screw lock washer (4) |
| 228 | 5/16" Welch plug |
| 304 | 3/8" Welch plug |
| 385 | 1/4" Welch plug (4) |
| **Bleeds:** | (See cut for location) |
| 4L68 | "L" bleed screw |
| 4M43 | "M" bleed screw |
| 4W54 | "W" bleed screw |
| **Assemblies:** | |
| 5A601eS | Throttle tube assembly |
| 5A612e | Fuel bowl assembly |
| 621 | Drain cock |
| 5A627e | Strainer cage assembly (¼"Female I.P.T.) |
| 4A630eS | Throttle shaft & stop lever assembly |
| 4A642eS | Metering bracket assembly |
| 4A644eS | Throttle stop lever assembly |
| 5A646e | Cork float assembly |
| 5A647e | Float valve assembly |
| 5A648e | Priming plunger assembly |
| 4A678eS | Throttle tube with venturi assembly |

For Drain Filter see Page 17

Numbers shown are manufacturer's, not "Caterpillar" Part numbers, except when specified.

# ENSIGN CARBURETOR—TYPE AeSa, 1¼"

Manufacturer
ENSIGN CARBURETOR CO., LTD.
7010 S. Alameda Str. or 450 East Ohio Str.
Huntington Park, Calif. Chicago, Ill.

For Parts Service on this Carburetor Order from the Manufacturer or his Representative

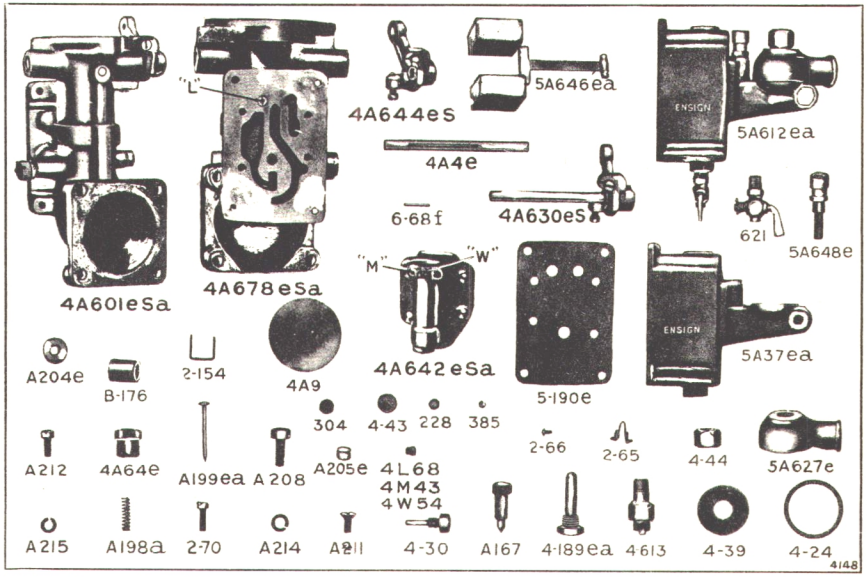


## CATERPILLAR NO. S-2499

| PART No | DESCRIPTION |
|---|---|
| 4A4e | Throttle shaft |
| 4A9 | Throttle disc |
| 4-24 | Strainer cage gasket |
| 4-30 | Float lever pivot |
| 5A37ea | Fuel bowl |
| 4-39 | Strainer cage screen |
| 4-43 | 7/16" Welch plug |
| 4-44 | Strainer cage nut |
| 4A64e | Fuel adjusting screw |
| 2-65 | Adjustment retainer |
| 2-66 | Retainer screw (2 used in Carb.) |
| 6-68f | Throttle stop pin |
| 2-70 | Throttle stop adjusting screw (2 used in Carb.) |
| 2-154 | Disc staple |
| A167 | Idling adjusting screw |
| B-176 | Throttle bearing bushing (2 used in Carb.) |
| 4-189ea | Fuel orifice tube |
| 5-190e | Metering bracket gasket |
| A198a | Needle valve spring |
| A199ea | Needle valve |
| A204e | Throttle dust washer |
| A205e | Drain dust plug |
| A208 | Venturi screw |
| A211 | Metering bracket screw(4 used in Carb.) |

| PART No. | DESCRIPTION |
|---|---|
| A212 | Fuel bowl screw (4 used in Carb.) |
| A214 | Venturi screw lock washer |
| A215 | Fuel bowl screw lock washer (4 used in Carb.) |
| 228 | 5/16" Welch plug (bottom of air horn) |
| 304 | 3/8" Welch plug |
| 385 | 1/4" Welch plug (4 used in Carb.) |
| **Bleeds:** | (See cut for location) |
| 4L68 | "L" bleed screw |
| 4M43 | "M" bleed screw |
| 4W54 | "W" bleed screw |
| **Assemblies:** | |
| 4A601eSa | Throttle tube assembly |
| 5A612ea | Fuel bowl assembly |
| 4-613 | Float valve assembly |
| 621 | Drain cock |
| 5A627e | Strainer cage assembly (¼"Female I.P.T.) |
| 4A630eS | Throttle shaft and stop assembly |
| 4A642eSa | Metering bracket assembly |
| 4A644eS | Throttle stop lever assembly |
| 5A646ea | Metal float assembly |
| 5A648e | Priming plunger assembly |
| 4A678eSa | Throttle tube with venturi assembly |

For Drain Filter see Page 17

Numbers shown are manufacturer's, not "Caterpillar" Part numbers, except when specified.

# ENSIGN CARBURETOR—TYPE AeL, 1¼"

Manufacturer
ENSIGN CARBURETOR CO., LTD.
7010 S. Alameda Str. or 450 East Ohio Str.
Huntington Park, Calif. Chicago, Ill.

For Parts Service on this Carburetor Order from the Manufacturer or his Representative

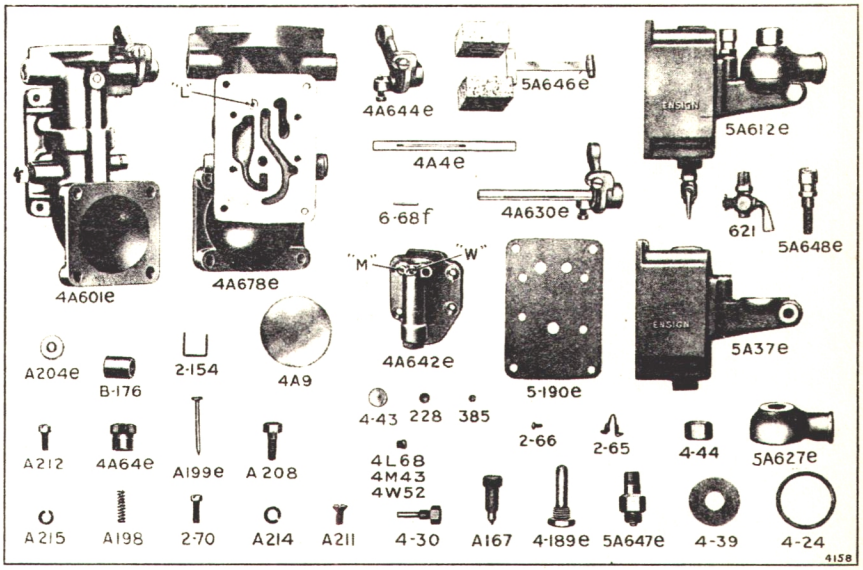


## CATERPILLAR NO. L-1112

| PART No. | DESCRIPTION |
|---|---|
| 4A4e | Throttle shaft |
| 4A9 | Throttle disc |
| 4-24 | Strainer cage gasket |
| 4-30 | Float lever pivot |
| 5A37e | Fuel bowl |
| 4-39 | Strainer cage screen |
| 4-43 | 7/16" Welch plug |
| 4-44 | Strainer cage nut |
| 4A64e | Fuel adjusting screw |
| 2-65 | Adjustment retainer |
| 2-66 | Retainer screw (2) |
| 6-68f | Throttle stop pin |
| 2-70 | Throttle stop adjusting screw (2) |
| 2-154 | Disc staple |
| A167 | Idling adjusting screw |
| B-176 | Throttle bearing bushing (2); spec. stainless steel. |
| 4-189e | Fuel orifice tube |
| 5-190e | Metering bracket gasket |
| A198 | Needle valve spring |
| A199e | Needle valve |
| A204e | Throttle dust washer |
| A208 | Venturi screw |
| A211 | Metering bracket screw (4) |

| PART No. | DESCRIPTION |
|---|---|
| A212 | Fuel bowl screw (4) |
| A214 | Venturi screw lock washer |
| A215 | Fuel bowl screw lock washer (4) |
| 228 | 5/16" Welch plug (bottom of air horn) |
| 385 | 1/4" Welch plug (4) |
| **Bleeds:** | (See cut for location) |
| 4L68 | "L" bleed screw |
| 4M43 | "M" bleed screw |
| 4W52 | "W" bleed screw |
| **Assemblies:** | |
| 4A601e | Throttle tube assembly |
| 5A612e | Fuel bowl assembly |
| 621 | Drain cock |
| 5A627e | Strainer cage assembly (½"Female I.P.T.) |
| 4A630e | Throttle shaft and stop lever assembly |
| 4A642e | Metering bracket assembly |
| 4A644e | Throttle stop lever assembly |
| 5A646e | Cork float assembly |
| 5A647e | Float valve assembly |
| 5A648e | Priming plunger assembly |
| 4A678e | Throttle tube with venturi assembly |

For Drain Filter see Page 17

Numbers shown are manufacturer's, not "Caterpillar" Part numbers, except when specified.

# ENSIGN CARBURETOR—TYPE AeLa, 1¼"

Manufacturer
ENSIGN CARBURETOR CO., LTD.
7010 S. Alameda Str. or 450 East Ohio Str.
Huntington Park, Calif. Chicago, Ill.

For Parts Service on this Carburetor Order from the Manufacturer or his Representative

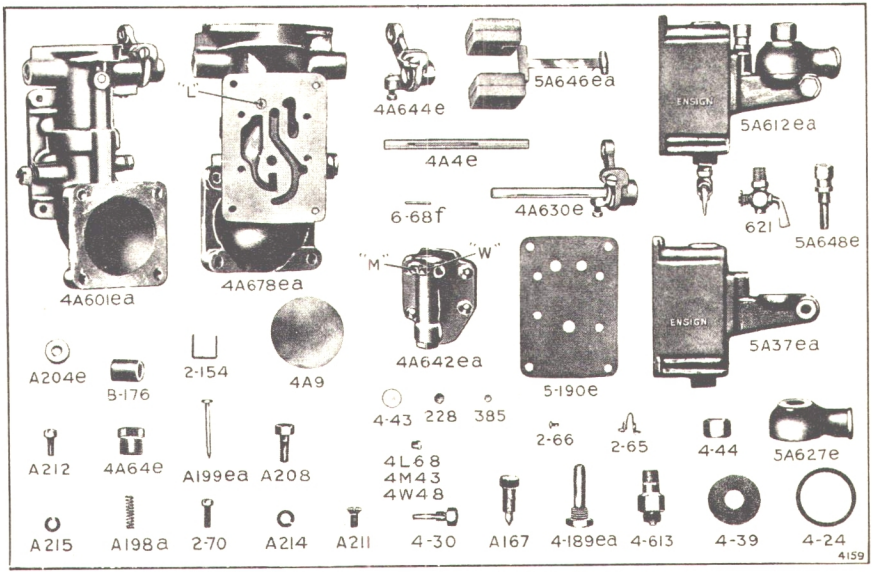


## CATERPILLAR NO. L-2092

| PART No. | DESCRIPTION |
|---|---|
| 4A4e | Throttle shaft |
| 4A9 | Throttle disc |
| 4-24 | Strainer cage gasket |
| 4-30 | Float lever pivot |
| 5A37ea | Fuel bowl |
| 4-39 | Strainer cage screen |
| 4-43 | 7/16" Welch plug |
| 4-44 | Strainer cage nut |
| 4A64e | Fuel adjusting screw |
| 2-65 | Adjusting retainer |
| 2-66 | Retainer screws (2) |
| 6-68f | Throttle stop pin |
| 2-70 | Throttle stop adjusting screws (2) |
| 2-154 | Disc staple |
| A167 | Idling adjusting screw |
| B-176 | Throttle bearing bushings (2) spec. stainless steel |
| 4-189ea | Fuel orifice tube |
| 5-190e | Metering bracket gasket |
| A198a | Needle valve spring |
| A199ea | Needle valve |
| A204e | Throttle dust washer |
| A208 | Venturi screw |
| A211 | Metering bracket screws (4) |

| PART No. | DESCRIPTION |
|---|---|
| A212 | Fuel bowl screws (4) |
| A214 | Venturi screw lock washer |
| A215 | Fuel bowl screw lock washers (4) |
| 228 | 7/16" Welch plug (bottom of air horn) |
| 385 | 1/4" Welch plugs (4) |
| **Bleeds:** | (See cut for location) |
| 4L68 | "L" bleed screw |
| 4M43 | "M" bleed screw |
| 4W48 | "W" bleed screw |
| **Assemblies:** | |
| 4A601ea | Throttle tube assembly |
| 5A612ea | Fuel bowl assembly |
| 4-613 | Float valve assembly |
| 621 | Drain cock |
| 5A627e | Strainer cage assembly (¼"Female I.P.T.) |
| 4A630e | Throttle shaft and stop assembly |
| 4A642ea | Metering bracket assembly |
| 4A644e | Throttle stop lever assembly |
| 5A646ea | Metal float assembly |
| 5A648e | Priming plunger assembly |
| 4A678ea | Throttle tube with venturi assembly |

Numbers shown are manufacturer's, not "Caterpillar" Part numbers, except when specified.

# ENSIGN CARBURETOR—TYPE AeLc, 1¼"

Manufacturer
ENSIGN CARBURETOR CO., LTD.
7010 S. Alameda Str. or 450 East Ohio Str.
Huntington Park, Calif. Chicago, Ill.

For Parts Service on this Carburetor Order from the Manufacturer or his Representative

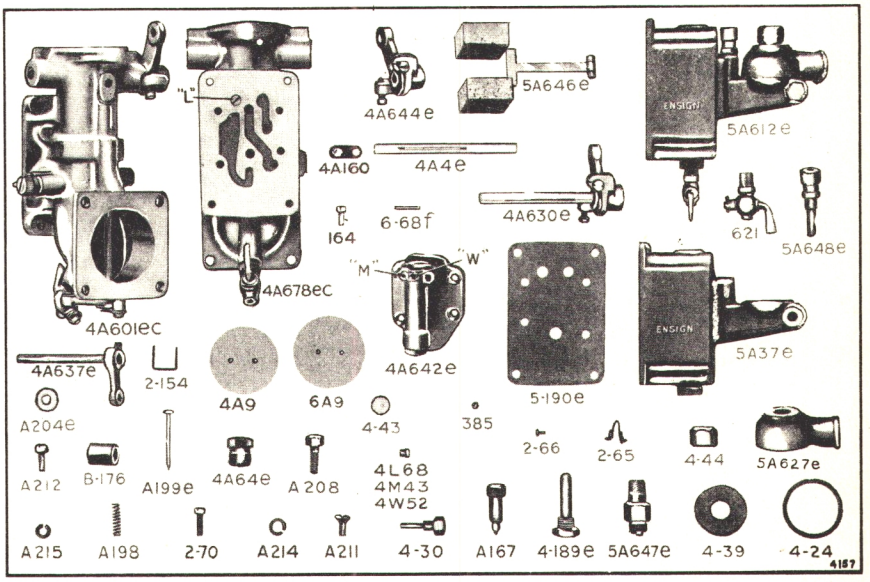


## CATERPILLAR NO. 1A597

| PART No. | DESCRIPTION |
|---|---|
| 4Ade | Throttle shaft |
| 4A9 | Throttle disc |
| 6A9 | Choke disc |
| 4-24 | Strainer cage gasket |
| 4-30 | Float lever pivot |
| 5A37e | Fuel bowl |
| 4-39 | Strainer cage screen |
| 4-43 | 7/16" Welch plug |
| 4-44 | Strainer cage nut |
| 4A64c | Fuel adjusting screw |
| 2-65 | Adjusting retainer |
| 2-66 | Retainer screws (2 used in Carb.) |
| 6-68f | Throttle stop pin |
| 2-70 | Throttle stop adjusting screws (2 used in Carb.) |
| 2-154 | Disc staple |
| 4A160 | Choke shaft support |
| 164 | Choke shaft support screw |
| A167 | Idling adjusting screw |
| B176 | Throttle bearing bushings (2 used in Carb.) |
| 4-189e | Fuel orifice tube |
| 5-190e | Metering bracket gasket |
| A198 | Needle valve spring |
| A199e | Needle valve |
| A204e | Throttle dust washer |
| A208 | Venturi screw |

| PART No. | DESCRIPTION |
|---|---|
| A211 | Metering bracket screws (4 used in Carb.) |
| A212 | Fuel bowl screws (4 used in Carb.) |
| A214 | Venturi screw lock washer |
| A215 | Fuel bowl screw lock washers (4 used in Carb.) |
| 385 | 1/4" Welch plugs (4 used in Carb.) |
| **Bleeds:** | (See cut for location) |
| 4L68 | "L" bleed screw |
| 4M43 | "M" bleed screw |
| 4W52 | "W" bleed screw |
| **Assemblies:** | |
| 4A601ec | Throttle tube assembly |
| 5A612e | Fuel bowl assembly |
| 621 | Drain cock |
| 5A627e | Strainer cage assembly (¼"Female I.P.T.) |
| 4A630e | Throttle shaft and stop lever assembly |
| 4A637e | Choke shaft and stop lever assembly |
| 4A642e | Metering bracket assembly |
| 4A644e | Throttle stop lever assembly |
| 5A646e | Cork float assembly |
| 5A647e | Float valve assembly |
| 5A648e | Priming plunger assembly |
| 4A678ec | Throttle tube with venturi assembly |

For Drain Filter see Page 17

Numbers shown are manufacturer's, not "Caterpillar" Part numbers, except when specified.

# ENSIGN CARBURETOR—TYPE BeV, 1"

Manufacturer
ENSIGN CARBURETOR CO., LTD.
7010 S. Alameda Str. or 450 East Ohio Str.
Huntington Park, Calif. Chicago, Ill.

For Parts Service on this Carburetor Order from the Manufacturer or his Representative

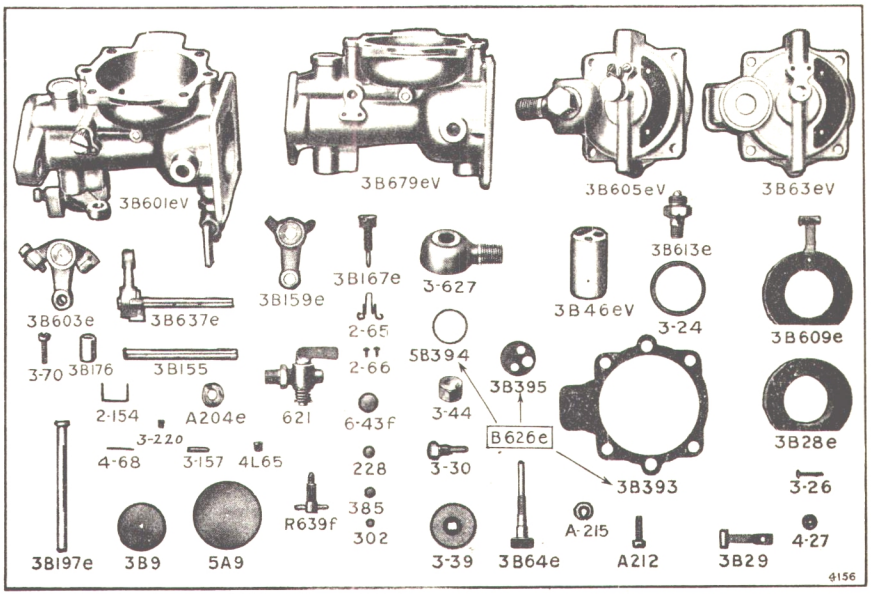


## CATERPILLAR NO. V-378

| PART No. | DESCRIPTION |
|---|---|
| 3B9 | Throttle disc |
| 5A9 | Choke disc |
| 3-24 | Strainer cage gasket |
| 3-26 | Float lever screw |
| 4-27 | Float lever screw washer |
| 3B28e | Cork float |
| 3B29 | Float lever |
| 3-30 | Float lever pivot |
| 3-39 | Strainer cage screen |
| 6-43f | 1/8" Welch plug |
| 3-44 | Strainer cage nut |
| 3B466eV | Fuel control |
| 3B63eV | Fuel bowl cover |
| 3B64e | Fuel adjusting screw |
| 2-65 | Adjustment retainer |
| 2-66 | Retainer screws (2 used in Carb.) |
| 4-63 | Throttle stop pin |
| 3-70 | Throttle stop adjusting screw |
| 2-154 | Disc staple |
| 3B155 | Choke shaft |
| 3-157 | Choke lever pin |
| 3B159e | Choke lever |
| 3B167e | Idling adjustment screw |
| 3B176 | Throttle bearing bushings (2 used in Carb.) |
| 3B197e | Throttle shaft and head |

| PART No. | DESCRIPTION |
|---|---|
| A204e | Throttle dust washer |
| A212 | Fuel bowl cover screws (4 used in Carb.) |
| A215 | Fuel bowl screw lock washers (4 used in Carb.) |
| 3-220 | Screw plug |
| 228 | 5/16" Welch plug |
| 302 | 3/16" Welch plug |
| 385 | 1/4" Welch plug |
| **Bleeds:** | |
| 4L65 | "L" bleed screw |
| **Assemblies:** | |
| 3B601eV | Throttle tube assembly |
| 3B603e | Throttle stop lever assembly |
| 3B605eV | Fuel bowl cover assembly |
| 3B609e | Float assembly (cork) |
| 3B613e | Float valve assembly |
| 621 | Drain cock |
| B626e | Control and bowl gasket assembly (Made up of 3B393, 5B394, 3B395) (Separate parts not serviced) |
| 3-627 | Strainer cage assembly (1/8" Male I.P.T.) |
| 3B637e | Choke shaft and stop assembly |
| R639f | Drain cock needle and handle assembly |
| 3B679eV | Throttle tube and venturi nozzle assembly (Not serviced, Order 3B601eV) |

For Drain Filter see Page 17

Numbers shown are manufacturer's, not "Caterpillar" Part numbers, except when specified.

# ENSIGN CARBURETOR—TYPE BeVa, 1"

Manufacturer
ENSIGN CARBURETOR CO., LTD.
7010 S. Alameda Str. or 450 East Ohio Str.
**Huntington Park, Calif.** **Chicago, Ill.**

For Parts Service on this Carburetor Order from the **Manufacturer** or his **Representative**

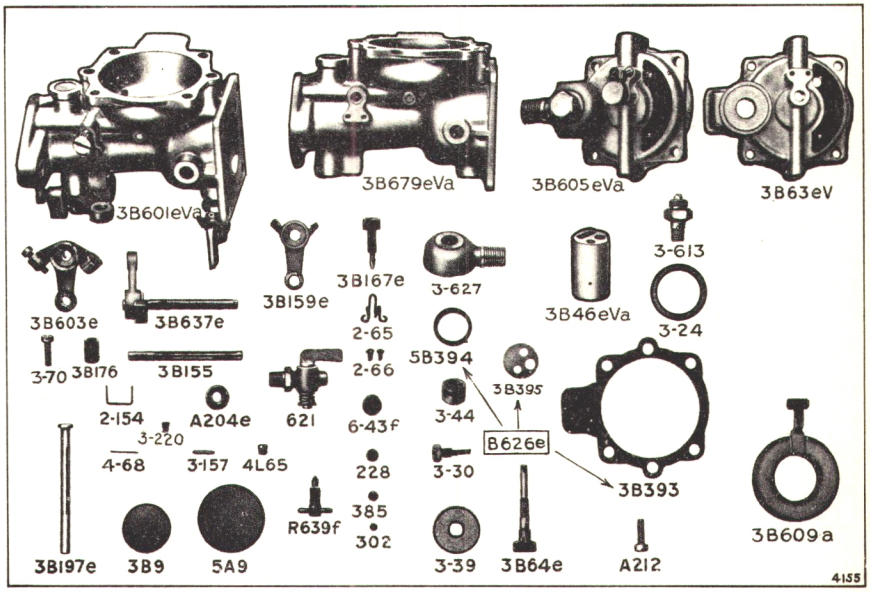


## CATERPILLAR NO. 1A767

| PART No. | DESCRIPTION |
|---|---|
| 3B9 | Throttle disc |
| 5A9 | Choke disc |
| 3-24 | Strainer cage gasket |
| 3-30 | Float lever pivot |
| 3-39 | Strainer cage screen |
| 6-43f | 1/2" Welch plug |
| 3-44 | Strainer cage nut |
| 3B46eVa | Fuel control |
| 3B63eV | Fuel bowl cover |
| 3B64e | Fuel adjusting screw |
| 2-65 | Adjustment retainer |
| 2-66 | Retainer screws (2 used in Carb.) |
| 4-68 | Throttle stop pin |
| 3-70 | Throttle stop adjusting screw |
| 2-154 | Disc staple |
| 3B155 | Choke shaft |
| 3-157 | Choke lever pin |
| 3B159e | Choke lever |
| 3B167e | Idling adjustment screw |
| 3B176 | Throttle bearing bushings (2 used in Carb.) |
| 3B197e | Throttle shaft and head |
| A204e | Throttle dust washer |

| PART No. | DESCRIPTION |
|---|---|
| A212 | Fuel bowl cover screws (4 used in Carb.) |
| 3-220 | Screw plug |
| 228 | 5/16" Welch plug |
| 302 | 3/16" Welch plug |
| 385 | 1/4" Welch plug |
| **Bleeds:** | |
| 4L65 | "L" bleed screw |
| **Assemblies:** | |
| 3B601eVa | Throttle tube assembly |
| 3B603e | Throttle stop lever assembly |
| 3B605eVa | Fuel bowl cover assembly |
| 3B609a | Float assembly (metal) |
| 3-613 | Float valve assembly |
| 621 | Drain cock |
| B626e | Control and bowl gasket assembly (Made up of 3B393, 5B394 and 3B395) (Separate parts not serviced) |
| 3-627 | Strainer cage assembly |
| 3B637e | Choke shaft and stop assembly |
| R639f | Drain cock needle and handle assembly |
| 3B679eVa | Throttle tube and venturi nozzle assembly |

For Drain Filter see Page 17

Numbers shown are manufacturer's, not "Caterpillar" Part numbers, except when specified.

# ENSIGN CARBURETOR—TYPE BeT, 1"

Manufacturer
ENSIGN CARBURETOR CO., LTD.
7010 S. Alameda Str. or 450 East Ohio Str.
Huntington Park, Calif. Chicago, Ill.

For Parts Service on this Carburetor Order from the Manufacturer or his Representative

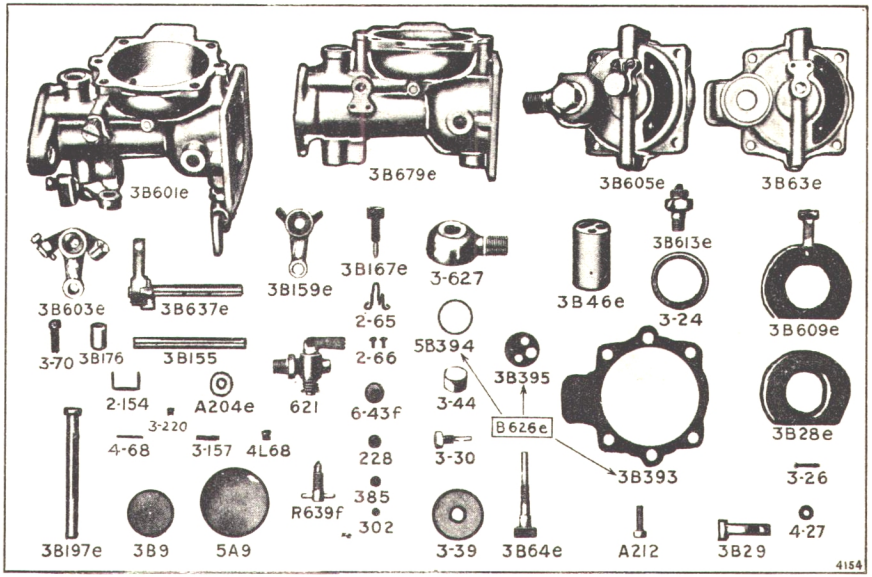


## CATERPILLAR NO. T-585

| PART No. | DESCRIPTION |
|---|---|
| 3B9 | Throttle disc |
| 5A9 | Choke disc |
| 3-24 | Strainer cage gasket |
| 3-26 | Float lever screw |
| 4-27 | Float lever screw washer |
| 3B28e | Cork float |
| 3B29 | Float lever |
| 3-30 | Float lever pivot |
| 3-39 | Strainer cage screen |
| 6-43f | 1/2" Welch plug |
| 3-44 | Strainer cage nut |
| 3B46e | Fuel control |
| 3B63e | Fuel bowl cover |
| 3B64e | Fuel adjusting screw |
| 2-65 | Adjustment retainer |
| 2-66 | Retainer screws (2 used in Carb.) |
| 4-68 | Throttle stop pin |
| 3-70 | Throttle stop adjusting screw |
| 2-154 | Disc staple |
| 3B155 | Choke shaft |
| 3-157 | Choke lever pin |
| 3B159e | Choke lever |
| 3B167e | Idling adjustment screw |
| 3B176 | Throttle bearing bushings (2 used in Carb.) |

| PART No. | DESCRIPTION |
|---|---|
| 3B197e | Throttle shaft and head |
| A204e | Throttle dust washer |
| A212 | Fuel bowl cover screws (4 used in Carb.) |
| 3-220 | Screw plug |
| 228 | 5/16" Welch plug |
| 302 | 3/16" Welch plug |
| 385 | 1/4" Welch plug |
| **Bleeds:** | |
| 4L68 | "L" bleed screw |
| **Assemblies:** | |
| 3B601e | Throttle tube assembly |
| 3B603e | Throttle stop lever assembly |
| 3B605e | Fuel bowl cover assembly |
| 3B609e | Float assembly (cork) |
| 3B613e | Float valve assembly |
| 621 | Drain cock |
| B626e | Control and bowl gasket assembly (Made up of Nos. 5B394, 3B395 and 3B393) (Separate parts not serviced) |
| 3-627 | Strainer cage assembly ($\frac{1}{4}$" Male I.P.T.) |
| 3B637e | Choke shaft and stop assembly |
| R639f | Drain cock needle and handle assembly |
| 3B679e | Throttle tube and venturi nozzle assembly |

For Drain Filter see Page 17

Numbers shown are manufacturer's, not "Caterpillar" Part numbers, except when specified.

# ENSIGN CARBURETOR—TYPE BeTa, 1"

Manufacturer
ENSIGN CARBURETOR CO., LTD.
7010 S. Alameda Str. or 450 East Ohio Str.
Huntington Park, Calif. Chicago, Ill.

For Parts Service on this Carburetor Order from the Manufacturer or his Representative

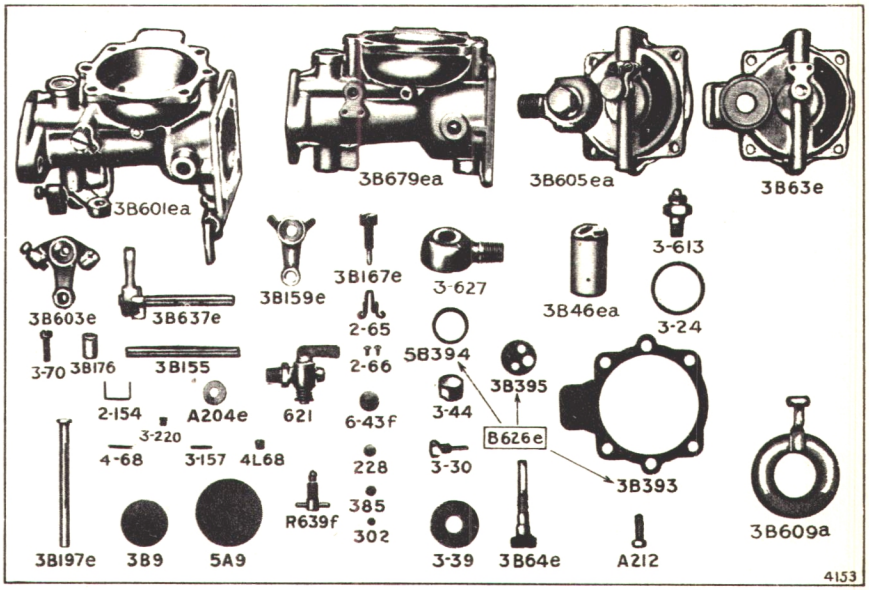


## CATERPILLAR NO. 1A766

| PART No. | DESCRIPTION |
|---|---|
| 3B9 | Throttle disc |
| 5A9 | Choke disc |
| 3-24 | Strainer cage gasket |
| 3-30 | Float lever pivot |
| 3-39 | Strainer cage screen |
| 6-43f | 1/2" Welch plug |
| 3-44 | Strainer cage nut |
| 3B46ea | Fuel control |
| 3B63e | Fuel bowl cover |
| 3B64e | Fuel adjusting screw |
| 2-65 | Adjustment retainer |
| 2-66 | Retainer screws (2 used in Carb.) |
| 4-68 | Throttle stop pin |
| 3-70 | Throttle stop adjusting screw |
| 2-154 | Disc staple |
| 3B155 | Choke shaft |
| 3-157 | Choke lever pin |
| 3B159e | Choke lever |
| 3B167e | Idling adjustment screw |
| 3B176 | Throttle bearing bushings (2 used in Carb.) |
| 3B197e | Throttle shaft and head |
| A204e | Throttle dust washer |

| PART No. | DESCRIPTION |
|---|---|
| A212 | Fuel bowl cover screws (4 used in Carb.) |
| 3-220 | Screw plug |
| 228 | 5/16" Welch plug |
| 302 | 3/16" Welch plug |
| 385 | 1/4" Welch plug |
| **Bleeds:** | |
| 4L68 | "L" bleed screw |
| **Assemblies:** | |
| 3B601ea | Throttle tube assembly |
| 3B603e | Throttle stop lever assembly |
| 3B605ea | Fuel bowl cover assembly |
| 3B609a | Float assembly (metal) |
| 3-613 | Float valve assembly |
| 621 | Drain cock |
| B626e | Control and bowl gasket assembly (Made up of 3B393, 5B394 and 3B395) (Separate parts not serviced) |
| 3-627 | Strainer cage assembly (¼"Female I.P.T.) |
| 3B637e | Choke shaft and stop assembly |
| R639f | Drain cock needle and handle assembly |
| 3B679ea | Throttle tube and venturi nozzle assembly |

For Drain Filter see Page 17

Numbers shown are manufacturer's, not "Caterpillar" Part numbers, except when specified.

# ENSIGN CARBURETOR—TYPE BeD, 1"

Manufacturer
ENSIGN CARBURETOR CO., LTD.
7010 S. Alameda Str. or 450 East Ohio Str.
Huntington Park, Calif. Chicago, Ill.

For Parts Service on this Carburetor Order from the Manufacturer or his Representative

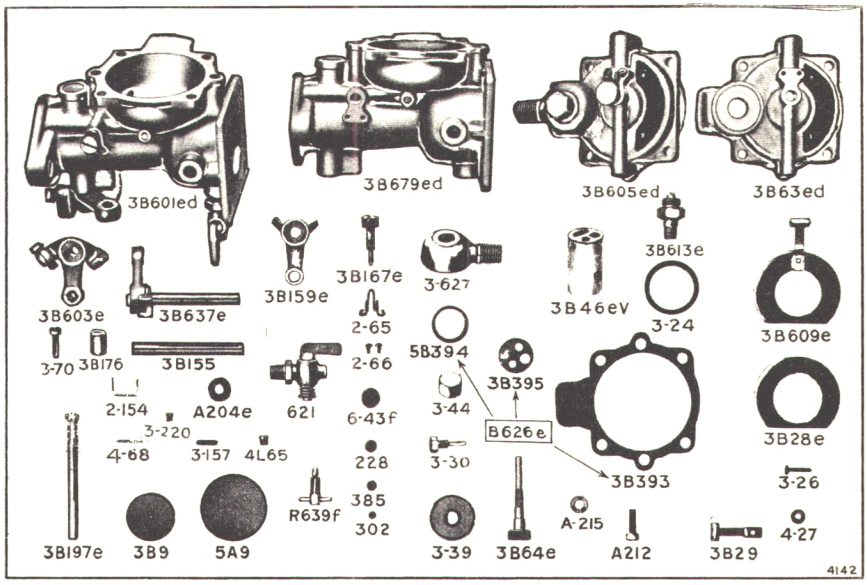


## CATERPILLAR NO. 1C1421

| PART No. | DESCRIPTION |
|---|---|
| 3B9 | Throttle disc |
| 5A9 | Choke disc |
| 3-24 | Strainer cage gasket |
| 3-26 | Float lever screw |
| 4-27 | Float lever screw washer |
| 3B28e | Cork float |
| 3B29 | Float lever |
| 3-30 | Float lever pivot |
| 3-39 | Strainer cage screen |
| 6-43f | 1/2" Welch plug |
| 3-44 | Strainer cage nut |
| 3B46eV | Fuel control |
| 3B63ed | Fuel bowl cover |
| 3B64e | Fuel adjusting screw |
| 2-65 | Adjustment retainer |
| 2-66 | Retainer screws (2 used in Carb.) |
| 4-68 | Throttle stop pin |
| 3-70 | Throttle stop adjusting screw |
| 2-154 | Disc staple |
| 3B155 | Choke shaft |
| 3-157 | Choke lever pin |
| 3B159e | Choke lever |
| 3B167e | Idling adjustment screw |
| 3B176 | Throttle bearing bushings (2 used in Carb.) |
| 3B197e | Throttle shaft and head |

| PART No. | DESCRIPTION |
|---|---|
| A204e | Throttle dust washer |
| A212 | Fuel bowl cover screws (4 used in Carb.) |
| A215 | Fuel bowl screw lock washers (4 used in Carb.) |
| 3-220 | Screw plug |
| 228 | 5/16" Welch plug |
| 302 | 3/16" Welch plug |
| 385 | 1/4" Welch plug |
| **Bleeds:** | |
| 4L65 | "L" bleed screw |
| **Assemblies:** | |
| 3B601ed | Throttle tube assembly |
| 3B603e | Throttle stop lever assembly |
| 3B605ed | Fuel bowl cover assembly |
| 3B609e | Float assembly (cork) |
| 3B613e | Float valve assembly |
| 621 | Drain cock |
| B626e | Control and bowl gasket assembly (Made up of 3B393, 5B394 and 3B395) (Separate parts not serviced) |
| 3-627 | Strainer cage assembly (1/4" Male I.P.T.) |
| 3B637e | Choke shaft and stop assembly |
| R639f | Drain cock needle and handle assembly |
| 3B679ed | Throttle tube and venturi nozzle assembly |

For Drain Filter see Page 17

Numbers shown are manufacturer's, not "Caterpillar" Part numbers. except when specified.

# ENSIGN CARBURETOR—TYPE BeC, 1"

Manufacturer
ENSIGN CARBURETOR CO., LTD.
7010 S. Alameda Str. or 450 East Ohio Str.
Huntington Park, Calif. Chicago, Ill.

For Parts Service on this Carburetor Order from the Manufacturer or his Representative

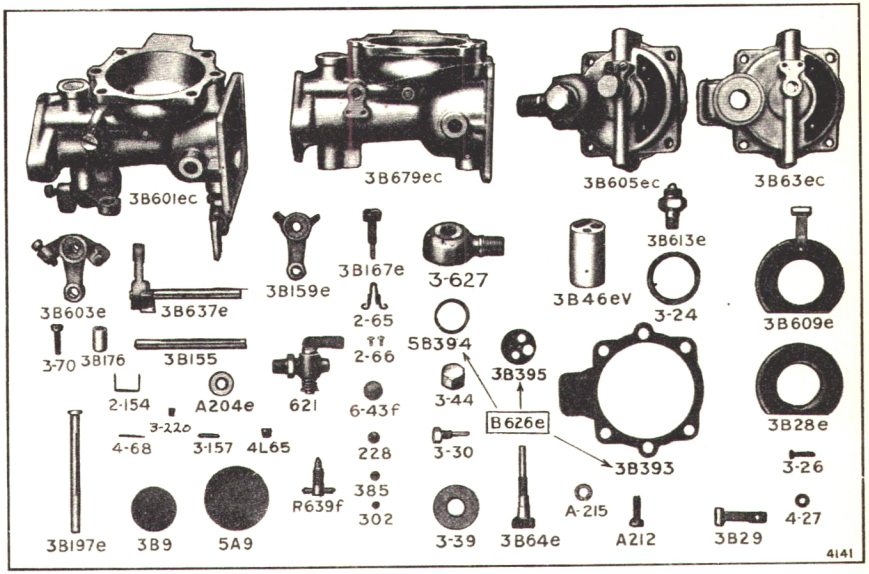


## CATERPILLAR NO. 1C1420

| PART No. | DESCRIPTION |
|---|---|
| 3B9 | Throttle disc |
| 5A9 | Choke disc |
| 3-24 | Strainer cage gasket |
| 3-26 | Float lever screw |
| 4-27 | Float lever screw washer |
| 3B28e | Cork float |
| 3B29 | Float lever |
| 3-30 | Float lever pivot |
| 3-39 | Strainer cage screen |
| 6-43f | 1/2" Welch plug |
| 3-44 | Strainer cage nut |
| 3B46eV | Fuel control |
| 3B63eC | Fuel bowl cover |
| 3B64e | Fuel adjusting screw |
| 2-65 | Adjustment retainer |
| 2-66 | Retainer screws (2 used in Carb.) |
| 4-68 | Throttle stop pin |
| 3-70 | Throttle stop adjusting screw |
| 2-154 | Disc staple |
| 3B155 | Choke shaft |
| 3-157 | Choke lever pin |
| 3B159e | Choke lever |
| 3B167e | Idling adjustment screw |
| 3B176 | Throttle bearing bushings (2 used in Carb.) |
| 3B197e | Throttle shaft and head |

| PART No. | DESCRIPTION |
|---|---|
| A204e | Throttle dust washer |
| A212 | Fuel bowl cover screws (4 used in Carb.) |
| A215 | Fuel bowl screw lock washers (4 used in Carb.) |
| 3-220 | Screw plug |
| 228 | 5/16" Welch plug |
| 302 | 3/16" Welch plug |
| 385 | 1/4" Welch plug |
| **Bleeds:** | |
| 4L65 | "L" bleed screw |
| **Assemblies:** | |
| 3B601eC | Throttle tube assembly |
| 3B603e | Throttle stop lever assembly |
| 3B605eC | Fuel bowl cover assembly |
| 3B609e | Float assembly (cork) |
| 3B613e | Float valve assembly |
| 621 | Drain cock |
| B626e | Control and bowl gasket assembly (Made up of 3B393, 5B394 and 3B395) (Separate parts not serviced) |
| 3-627 | Strainer cage assembly (¼"Male I.P.T.) |
| 3B637e | Choke shaft and stop assembly |
| R639f | Drain cock needle and handle assembly |
| 3B679eC | Throttle tube and venturi nozzle assembly |

For Drain Filter see Page 17

Numbers shown are manufacturer's, not "Caterpillar" Part numbers, except when specified.

# ENSIGN FUEL CLEANER No. 3075

Manufacturer
ENSIGN CARBURETOR CO., LTD.
7010 S. Alameda Str. or 450 E. Ohio Str.
Huntington Park, Calif. Chicago, Ill.

For Parts Service on this Fuel Cleaner Order from the Manufacturer or his Representative

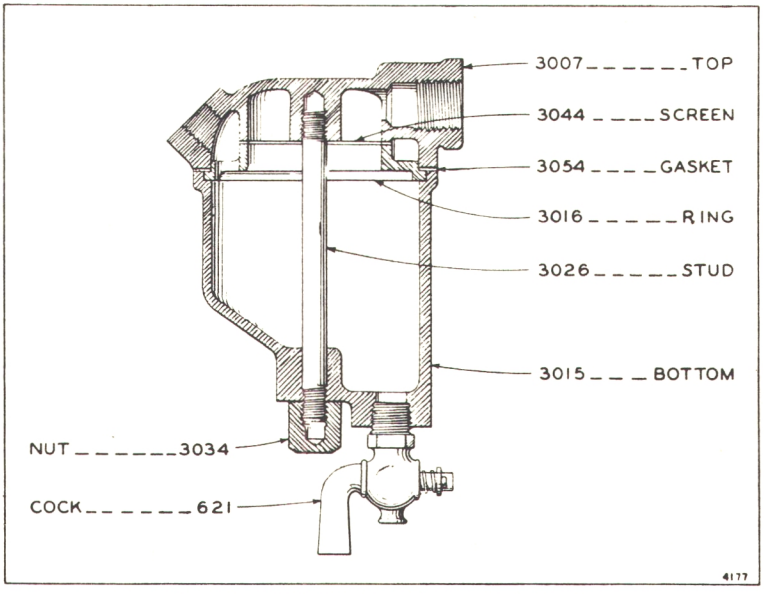


CATERPILLAR No. T-793

# ENSIGN FUEL CLEANER No. 3076

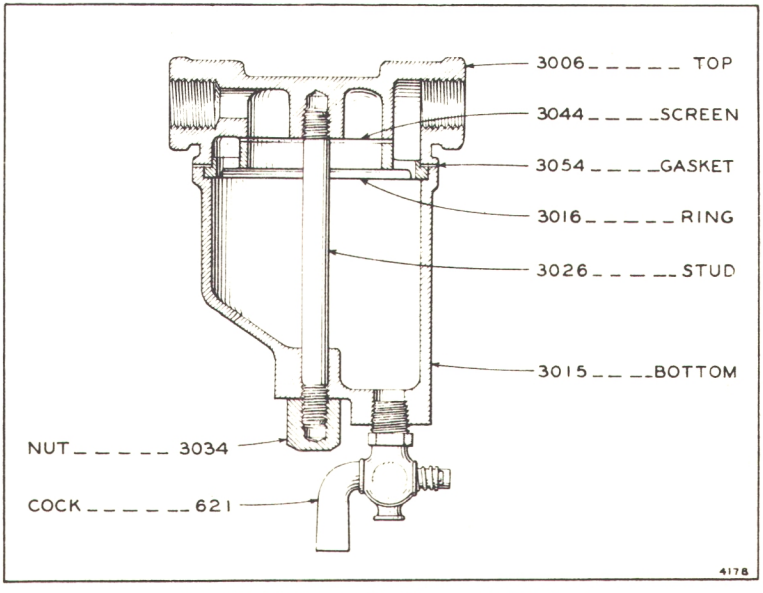


CATERPILLAR No. 2524-A

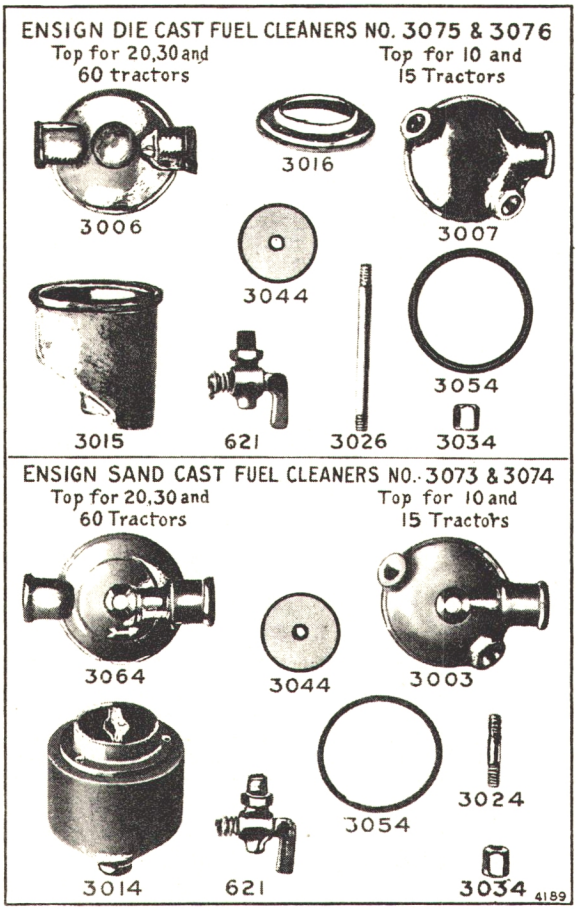


Numbers shown are manufacturer's, not "Caterpillar" part numbers, except when specified.

Form 1736 Printed in U.S.A.

# ZENITH CARBURETOR—TYPE HF, 3½"

Manufacturer
ZENITH-DETROIT CORPORATION
Foot of Hart Avenue
Detroit, Michigan

For Parts Service on this Carburetor Order from the Manufacturer or his Representative

| PART No. | DESCRIPTION |
|---|---|
| A482 | Carburetor |
| C42x2 | Taper Pin |
| C71x4 | Priming Hole Plug Washer |
| C71x10 | Filter Screen Ass'y Washer |
| C71x12 | Needle Valve Seat Washer |
| C71x18 | Float Axle Screw Washer |
| C71x23 | Idling Adjusting Seat Washer |
| C71x23 | Lower Plug Washer |
| C71x24 | Idling Jet Assembly Washer |
| C71x24 | Main Jet Washer |
| C71x24 | Compensator Washer |
| C313 | Idling Channel Hole Screw |
| D448 | Bowl Cover Ass'y Screw |
| D453 | Butterfly Stop Screw |
| D456 | Flange Lockwasher |
| D1015 | Compensating Jet (Specify Size) |
| D1022 | Lower Plug |
| D1121 | Flange Screw |
| D1134 | Butterfly Clamp Screw |
| D1175x1 | Butterfly Set Screw |
| D1177x5 | Main Jet (Specify Size) |
| D1198 | Throttle Butterfly |
| D1278 | Throttle Shaft |
| D1810 | Choke Screw Lockwasher |
| D1882 | Idling Needle Valve Spring |
| D1908x1 | Idling Needle Valve and Cap |
| D2314 | Air Shutter Wire |
| D2336 | Bowl Cover |
| D2338 | Needle Valve Collar |
| D2346 | Float Axle |
| D2347 | Bowl Cover Gasket |
| D2348 | Choke (Specify Size) |
| D2433 | Channel Hole Plug |
| D2500 | Idling Adjusting Seat |
| D2502 | Air Shutter |
| D2505 | Air Shutter Spring |
| D2531 | Choke Set Screw |
| D2649 | Priming Hole Plug |
| D2706 | Cap Jet |
| D2812 | Throttle Lever |
| D2723 | Air Shutter Lever and Shaft Assembly |
| D2902 | Cap Jet Washer |
| D2924 | Flange Gasket |
| D3105 | Needle Valve Seat (Specify Size) |
| D3106 | Needle Valve |
| D3443 | Idling Jet (Specify Size) |
| D3446 | Welch Plug—3/8" |
| D3858 | Float Assembly |
| D4775 | Filter Screen Assembly |

NOTE WHEN ORDERING

When ordering parts always give name of part and model of carburetor in addition to part number. , (For instance, C-2117 Float for Model U-5, when ordering chokes and jets, be sure to specify the size, which is stamped on each piece.)

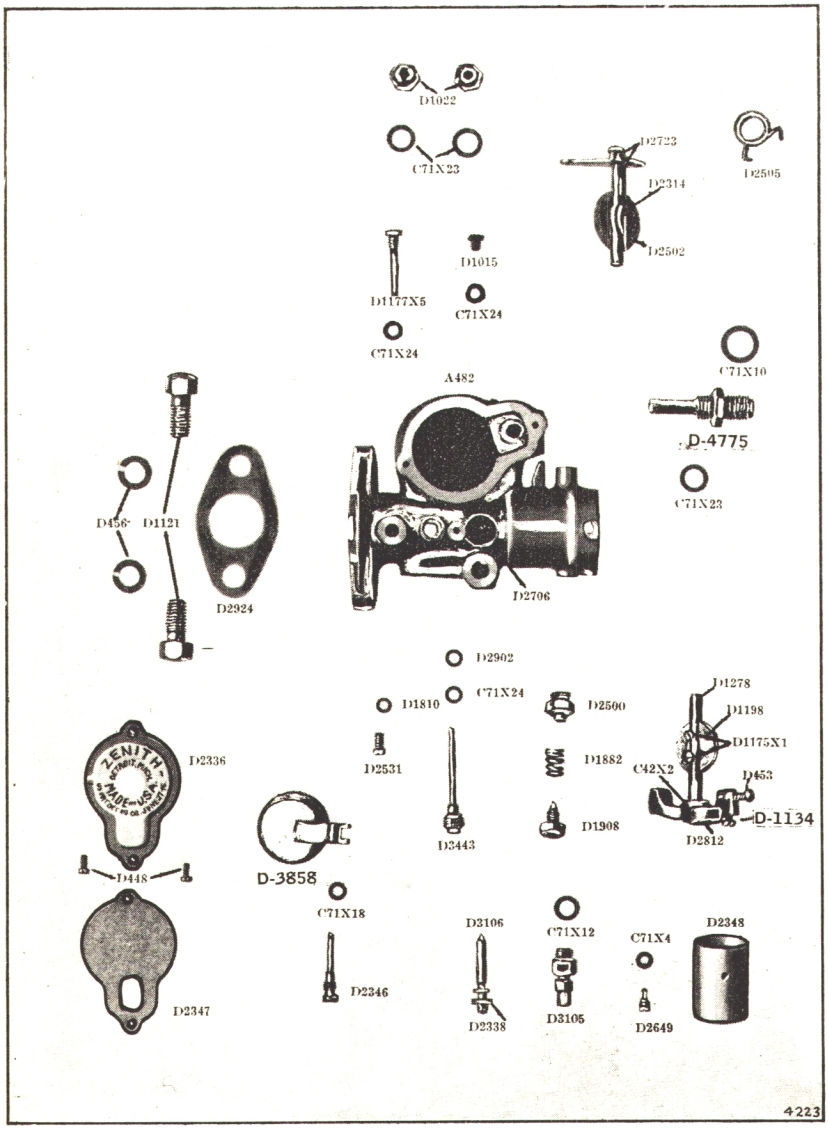


CATERPILLAR NO. AM-3376

Numbers shown are manufacturer's, not "Caterpillar" Part numbers, except when specified.

# ZENITH CARBURETOR—TYPE 84-T

Manufacturer
ZENITH-DETROIT CORPORATION
Foot of Hart Avenue
Detroit, Michigan

For Parts Service on this Carburetor Order from the Manufacturer or his Representative

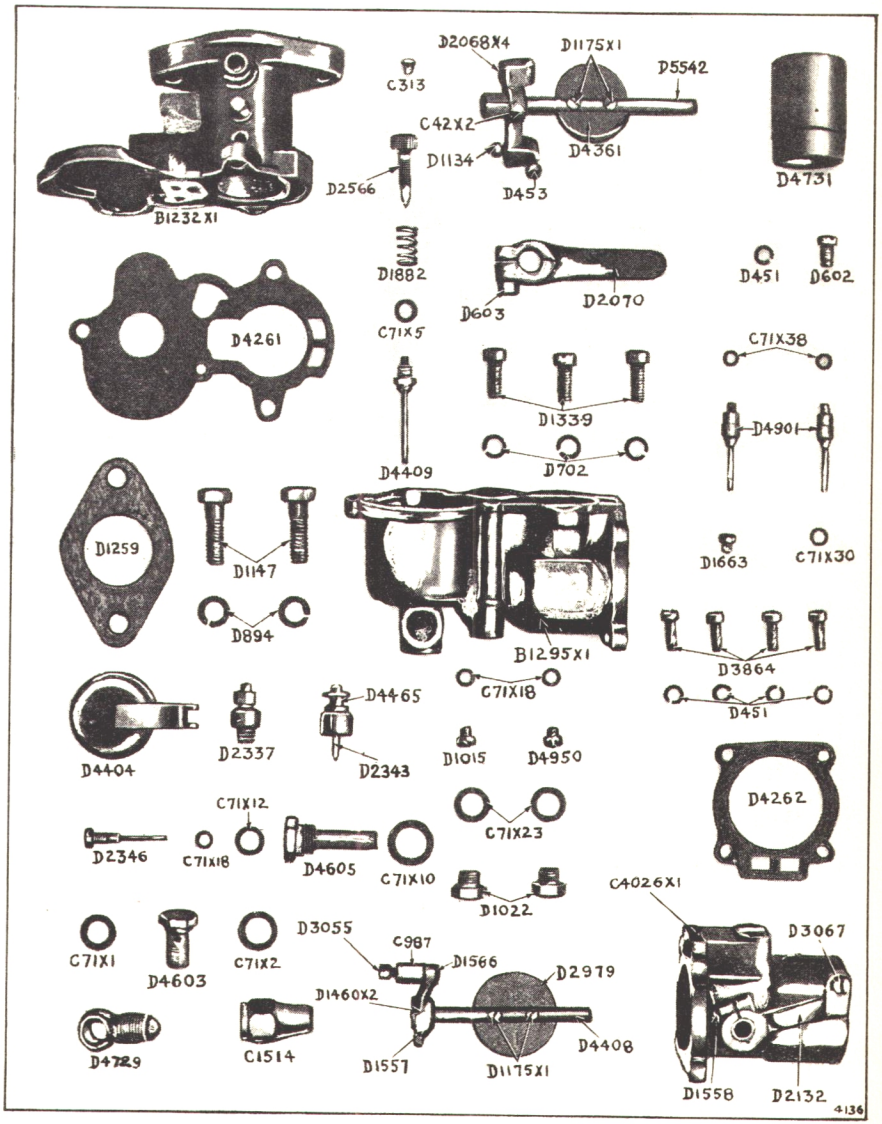


## CATERPILLAR NO. AM-3462

Numbers shown are manufacturer's, not "Caterpillar" Part numbers, except when specified.

| PART No. | DESCRIPTION |
|---|---|
| B-1232x1 | Upper Body |
| B-1295x1 | Fuel Bowl |
| C-42x2 | Taper Pin |
| C-71x1 | Union Body Fibre Washer |
| C-71x2 | Union Body Plug Fibre Washer |
| C-71x5 | Idling Jet Fibre Washer |
| C-71x10 | Fuel Screen Fibre Washer |
| C-71x12 | Fuel Valve Seat Fibre Washer |
| C-71x18 | Float Axle Screw Fibre Washer |
| C-71x18 | Compensator Fibre Washer |
| C-71x23 | Lower Plug Fibre Washer |
| C-71x30 | Channel Screw Fibre Washer |
| C-71x38 | Cap Jet Fibre Washer |
| C-313 | Priming Hole Screw |
| C-4026x1 | Air Connection |
| D-451 | Venturi Set Screw Lockwasher |
| D-451 | Air Connection Assembly Lockwasher |
| D-453 | Throttle Butterfly Adjusting Screw |
| D-602 | Venturi Screw |
| D-702 | Assembly Screw Lockwasher |
| D-1015 | Compensator (Specify Size) |
| D-1022 | Lower Plug |
| D-1134 | Throttle Lever Clamp Screw |
| D-1175x1 | Air Shutter Set Screw |
| D-1175x1 | Throttle Butterfly Set Screw |
| D-1339 | Assembly Screw |
| D-1663 | Channel Screw |
| D-1882 | Idling Needle Valve Friction Spring |
| D-2068x4 | Throttle Stop Lever |
| D-2070 | Throttle Clamp Lever |
| D-2162 | Air Shutter Spring |
| D-2337 | Fuel Valve Seat (Specify Size) |
| D-2343 | Needle Valve |
| D-2346 | Float Axle |
| D-2566 | Idling Adjusting Needle |
| D-2979 | Air Shutter |
| D-3077x2 | Air Shutter Lever |
| D-3692 | Throttle Lever Bushing |
| D-3864 | Air Connection Assembly Screw |
| D-4261 | Bowl to Barrel Gasket |
| D-4262 | Air Connection Gasket |
| D-4361 | Throttle Butterfly |
| D-4404 | Float Assembly |
| D-4408 | Air Shutter Shaft |
| D-4409 | Idling Jet (Specify Size) |
| D-4465 | Needle Valve Collar |
| D-4603 | Union Body Plug |
| D-4605 | Fuel Screen Assembly |
| D-4606 | Union Body |
| D-4731 | Venturi (Specify Size) |
| D-4901 | Jet Assembly |
| D-4950 | Main Jet (Specify Size) |
| D-5542 | Throttle Shaft |

Numbers shown are manufacturer's, not "Caterpillar" Part numbers.

# ZENITH CARBURETOR—TYPE T5T, 1¼"

Manufacturer
ZENITH-DETROIT CORPORATION
Foot of Hart Avenue
Detroit, Michigan

For Parts Service on this Carburetor Order from the Manufacturer or his Representative

| PART No. | DESCRIPTION |
|---|---|
| B-1054 | Carburetor Barrel |
| B-1055 | Carburetor Bowl |
| B-1381 | Air Intake |
| C-42x 1 | Taper Pin |
| C-71x 5 | Air Channel Screw Washer |
| C-71x10 | Filter Plug Washer |
| C-71x13 | Float Cover Plug Washer |
| C-71x23 | Needle Valve Seat Washer |
| C-71x23 | Lower Plug Washer |
| C-71x24 | Main Jet Washer |
| C-71x24 | Comp. Jet Washer |
| C-71x27 | Cap Jet Washer |
| C-71x27 | Float Axle Washer |
| C-71x36 | Union Body Washer |
| C-102 | Channel Hole Plug |
| C-313 | Priming Hole Screw |
| C-353 | Bowl Cover Plug |
| C-1514 | Union Body Nut |
| C-3342 | Venturi (Specify Size) |
| C-3715 | Bowl Cover |
| D-380 | Throttle Butterfly |
| D-447 | Bowl Cover Screw |
| D-450 | Venturi Screw |
| D-451 | Venturi Screw Lockwasher |
| D-451 | Air Intake Lockwasher |
| D-564 | Butterfly Set Screw |
| D-603 | Lever Clamp Screw |
| D-702 | Barrel to Bowl Lockwasher |
| D-873 | Air Intake Assembly Screw |
| D-1015 | Compensating Jet (Specify Size) |
| D-1022 | Lower Plug |
| D-1110 | Air Line Cone |
| D-1175x1 | Air Butterfly Set Screw |
| D-1177 | Main Jet (Specify Size) |
| D-1197 | Cover Screw Lockwasher |
| D-1254 | Pipe Plug |
| D-1610 | Air Intake Gasket |
| D-1822 | Barrel to Bowl Screw |
| D-1882 | Idling Needle Valve Spring |
| D-1962 | Filter Screen |
| D-2070 | Butterfly Lever |

| PART No. | DESCRIPTION |
|---|---|
| D-2112 | Idling Adjusting Needle |
| D-2162 | Air Shutter Spring |
| D-2206 | Needle Valve |
| D-2207 | Cap Jet |
| D-2209 | Float Assembly |
| D-2262 | Needle Valve Seat (Specify Size) |
| D-2265 | Union Body Plug |
| D-2315 | Float Axle and Retaining Screw Assembly |
| D-2321 | Bowl Cover Gasket |
| D-2435 | Packing Ring |
| D-2525 | Butterfly Shaft Bushing |
| D-2547 | Union Body |
| D-2644 | Packing |
| D-2813 | Idling Well Bushing |
| D-3034 | Air Shutter |
| D-3054 | Butterfly Shaft |
| D-3062x2 | Air Shutter Lever |
| D-3123 | Idling Jet Assembly (Specify Size) |
| D-3127 | Air Line Intake Tube |
| D-3128 | Air Line Barrel Tube |
| D-3129 | Bowl Vent Packing |
| D-3130 | Barrel to Bowl Gasket |
| D-3132 | Bowl Vent Tube |
| D-3133 | Air Line Elbow |
| D-3134 | Air Line Elbow Assembly |
| D-3628 | Air Line Tube Nut |
| D-3658 | Jet Adj. Needle Assembly |
| D-3669 | Needle Valve Collar |
| D-3666 | Butterfly Lever Bushing |
| D-3688 | Adj. Packing Housing |
| D-4094x3 | Butterfly Lever |
| D-4102 | Butterfly Stop Screw |
| D-4104 | Butterfly Clamp Screw Spring |
| D-4329 | Adj. Needle Ratched |
| D-4330 | Packing Bushing |
| D-5423 | Air Shutter Shaft |
| D-3134 | Special Assembly<br>2 D-1110 Air Line Cone<br>1 D-3133 Air Line Elbow<br>2 D-3628 Air Line Nut |

Numbers shown are manufacturer's, not "Caterpillar" Part numbers, except when specified.

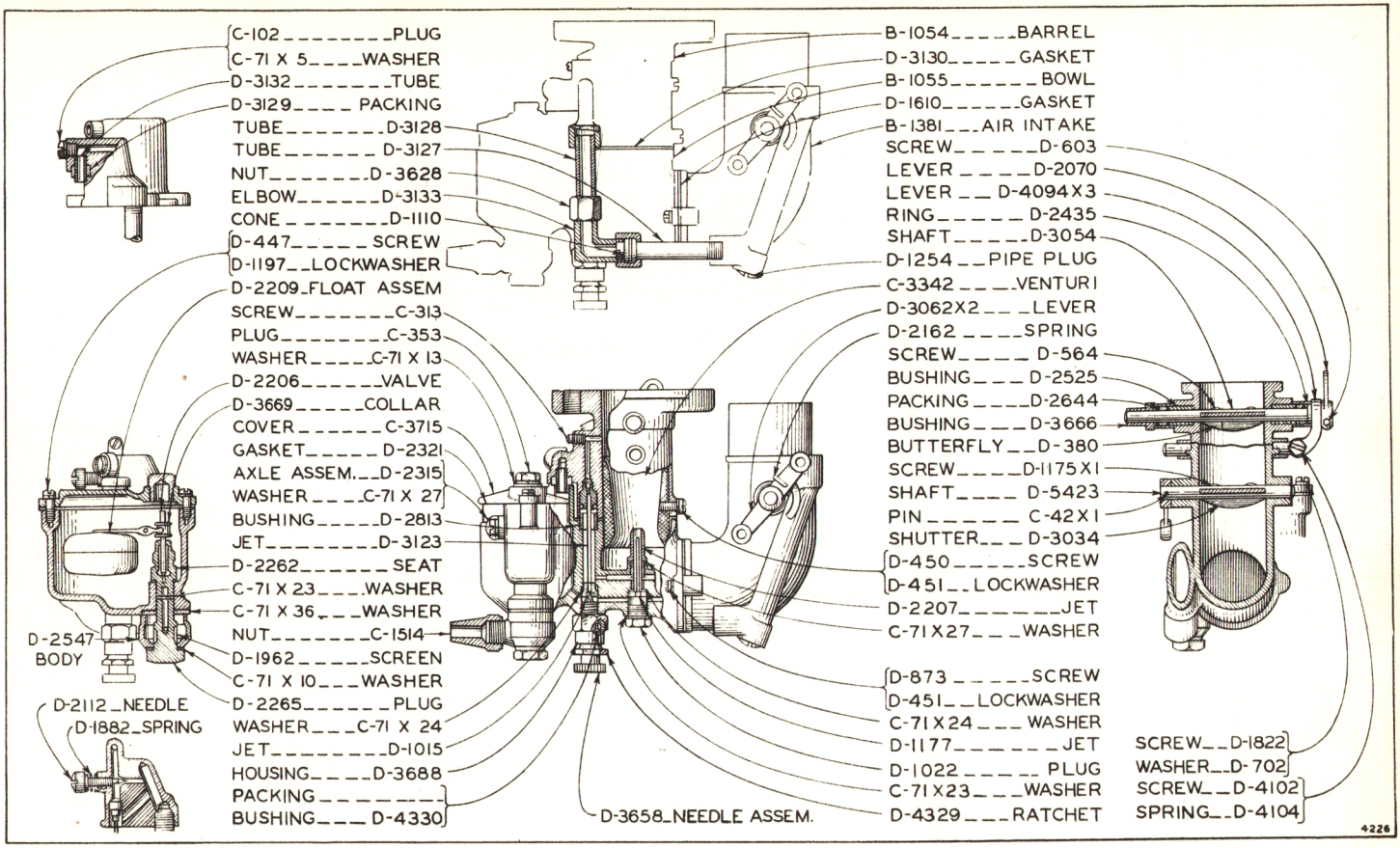


CATERPILLAR NO. AM-3673

# ZENITH CARBURETOR—TYPE T5T. 1¼"

Manufacturer
ZENITH-DETROIT CORPORATION
Foot of Hart Avenue
Detroit, Michigan

For Parts Service on this Carburetor Order from the Manufacturer or his Representative

| PART No. | DESCRIPTION |
|---|---|
| B-1040 | Air Intake |
| B-1054 | Carburetor Barrel |
| B-1055 | Carburetor Bowl |
| C-42x 2 | Taper Pin |
| C-71x 4 | Channel Screw Washer |
| C-71x 5 | Air Channel Screw Washer |
| C-71x10 | Filter Plug Washer |
| C-71x13 | Float Cover Plug Washer |
| C-71x23 | Needle Valve Seat Washer |
| C-71x23 | Lower Plug Washer |
| C-71x24 | Main Jet Washer |
| C-71x24 | Comp. Jet Washer |
| C-71x27 | Cap Jet Washer |
| C-71x27 | Float Axle Washer |
| C-71x36 | Union Body Washer |
| C-102 | Channel Hole Plug |
| C-313 | Priming Hole Screw |
| C-353 | Bowl Cover Plug |
| C-1514 | Union Body Nut |
| C-3342 | Venturi (Specify Size) No. 20 |
| C-3715 | Bowl Cover |
| D-380 | Throttle Butterfly |
| D-447 | Bowl Cover Screw |
| D-450 | Venturi Screw |
| D-451 | Venturi Screw Lock Washer |
| D-451 | Air Intake Lockwasher |
| D-453 | Butterfly Stop Screw |
| D-454 | Butterfly Clamp Screw |
| D-564 | Butterfly Set Screw |
| D-702 | Barrel to Bowl Lockwasher |
| D-873 | Air Intake Assembly Screw |
| D-1015 | Compensating Jet (Specify Size) No.19 |
| D-1022 | Lower Plug |
| D-1110 | Air Line Cone |
| D-1175x1 | Air Butterfly Set Screw |
| D-1177 | Main Jet (Specify Size) No. 20 |
| D-1197 | Cover Screw Lockwasher |
| D-1610 | Air Intake Gasket |
| D-1822 | Barrel to Bowl Screw |
| D-1882 | Idling Needle Valve Spring |
| D-1962 | Filter Screen |
| D-1993 | Air Shutter Spring |
| D-2112 | Idling Adjusting Needle |
| D-2206 | Needle Valve |

| PART No. | DESCRIPTION |
|---|---|
| D-2207 | Cap Jet |
| D-2209 | Float Assembly |
| D-2262 | Needle Valve Seat (Specify Size) No.52 |
| D-2265 | Union Body Plug |
| D-2315 | Float Axle and Retaining Screw Assembly |
| D-2321 | Bowl Cover Gasket |
| D-2435 | Packing Retainer |
| D-2437 | Packing Retainer Cap |
| D-2478 | Butterfly Shaft |
| D-2525 | Butterfly Shaft Bushing |
| D-2547 | Union Body |
| D-2644 | Packing Washer |
| D-2813 | Idling Well Bushing |
| D-2834 | Packing Cap Cotter Pin |
| D-2931 | Adjusting Needle |
| D-2932 | Packing Union |
| D-2940 | Packing Nut Assembly |
| D-3025x3 | Butterfly Lever |
| D-3033 | Jet Adjusting Assembly |
| D-3034 | Air Shutter |
| D-3035 | Air Shutter Shaft |
| D-3062x2 | Air Shutter Lever |
| D-3110 | Adjusting Needle Packing |
| D-3123 | Idling Jet Assembly (Specify Size) No.10 |
| D-3127 | Air Line Intake Tube |
| D-3128 | Air Line Barrel Tube |
| D-3129 | Bowl Vent Packing |
| D-3130 | Barrel to Bowl Gasket |
| D-3132 | Bowl Vent Tube |
| D-3133 | Air Line Elbow |
| D-3134 | Air Line Elbow Assembly |
| D-3628 | Air Line Tube Nut |
| D-3669 | Needle Valve Collar |
| D-3033 | Special Assembly<br>Consisting of:<br>D-2931 Adjusting Needle<br>D-2932 Packing Union<br>D-2940 Packing Nut Assembly<br>D-3110 Packing |
| D-3134 | Special Assembly<br>2 D-1110 Air Line Cone<br>1 D-3133 Air Line Elbow<br>2 D-3628 Air Line Nut |

Numbers shown are manufacturer's, not "Caterpillar" Part numbers, except when specified.

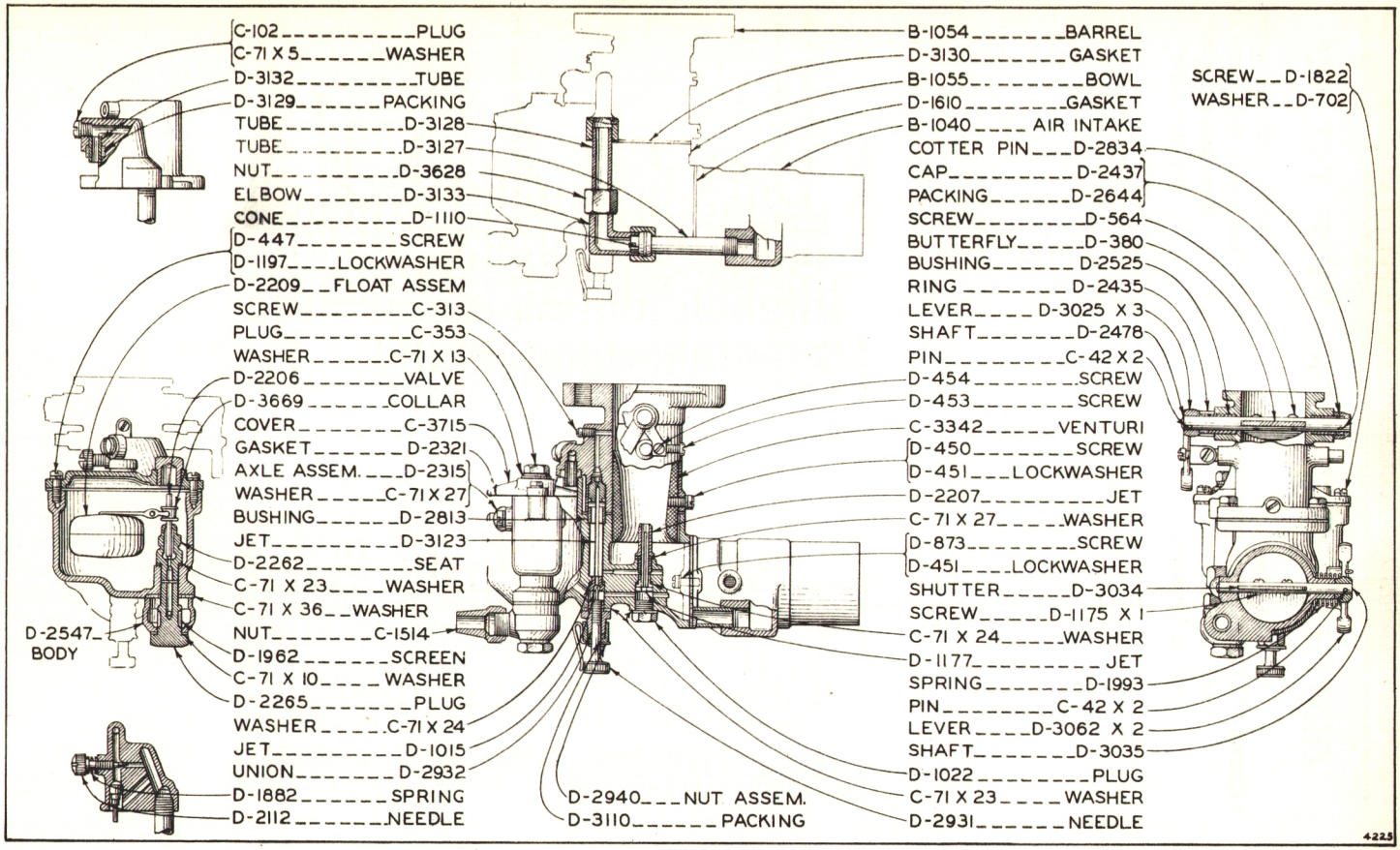


CATERPILLAR NO. 19286

# ZENITH CARBURETOR—TYPE L-6-T, 1½"

Manufacturer
ZENITH-DETROIT CORPORATION
Foot of Hart Avenue
Detroit, Michigan

For Parts Service on this Carburetor Order from the Manufacturer or his Representative

| PART No. | DESCRIPTION |
|---|---|
| A-490 | Carburetor Body |
| B-1056 | Air Intake |
| B-1071 | Float Cover |
| C-15x 1 | Priming Plug |
| C-16 | Idling Jet |
| C-41 | Lower Plug |
| C-42x 2 | Taper Pin |
| C-48 | Cap Jet |
| C-71x 1 | Main Jet Washer |
| C-71x 1 | Cap Jet Washer |
| C-71x 2 | Comp. Jet Washer |
| C-71x 3 | Lower Plug Washer |
| C-71x 3 | Adj. Needle Washer |
| C-71x 4 | Channel Screw Washer |
| C-71x 6 | Filter Plug Washer |
| C-71x 7 | Union Body Washer |
| C-71x10 | Needle Valve Seat Washer |
| C-71x12 | Well Plug Washer |
| C-71x12 | Dust Cap Washer |
| C-105 | Venturi (Specify Size) |
| C-107 | Compensator Jet, (Specify Size) |
| C-109 | Filter Plug |
| C-116 | Filter Plug Screen |
| C-134 | Main Jet, (Specify Size) |
| C-215 | Union Body |
| C-306 | Float |
| C-309 | Needle Valve Collar |
| C-311 | Channel Hole Screw |
| C-313 | Priming Hole Screw |
| C-480 | Needle Valve |
| C-549 | Needle Valve Seat, (Specify Size) |
| C-1514 | Union Body Nut |
| D-447 | Butterfly Clamp Screw |
| D-450 | Venturi Screw |
| D-451 | Venturi Screw Lockwasher |
| D-457 | Dust Cap Lock Anchor Screw |
| D-564 | Butterfly Set Screw |
| D-702 | Bowl Cover Screw Lockwasher |
| D-973 | Throttle Butterfly |
| D-1110 | Air Line Cone |
| D-1175x1 | Butterfly Set Screw |
| D-1188 | Intake Assembly Lockwasher |
| D-1197 | Dust Cap Lock Anchor Lockwasher |
| D-1214 | Throttle Shaft |
| D-1400 | Intake Assembly Screw |
| D-1759 | Cover Screw |
| D-1853 | Float Weight Axle |
| D-1882 | Idling Needle Valve Spring |
| D-2335 | Intake Gasket |
| D-2448 | Well Tube Plug |
| D-2566 | Idling Adj. Needle |
| D-2868 | Butterfly Stop Screw |
| D-2940 | Packing Nut Assembly |
| D-2941 | Jet Adjusting Needle |
| D-2942 | Idling Adjustment Assembly |
| D-2943 | Packing Union |
| D-2957 | Float Weight |
| D-3057 | Air Shutter Spring |
| D-3110 | Adjusting Needle Packing |
| D-3111 | Float Weight Axle Lock Wire |
| D-3127 | Air Line Intake Tube |
| D-3133 | Air Line Elbow |
| D-3134 | Air Line Elbow Assembly |
| D-3138 | Intake Air Line Tube |
| D-3139 | Bowl Cover Gasket |
| D-3140 | Dust Cap Lock |
| D-3141 | Dust Cap |
| D-3175 | Air Shutter |
| D-3176 | Air Shutter Shaft |
| D-3190 | Air Shutter Lever |
| D-3196 | Butterfly Lever |
| D-3628 | Air Line Tube Nut |
| D-2942 | Special Assembly<br>Consisting of:<br>D-2940 Packing Nut Assembly<br>D-2941 Adjusting Needle<br>D-2943 Packing Nut Assembly<br>D-3110 Packing |
| D-3134 | Special Assembly<br>Consisting of:<br>2 D-1110 Air Line Cone<br>1 D-3133 Air Line Elbow<br>2 D-3628 Air Line Nut |

Numbers shown are manufacturer's, not "Caterpillar" Part numbers, except when specified.

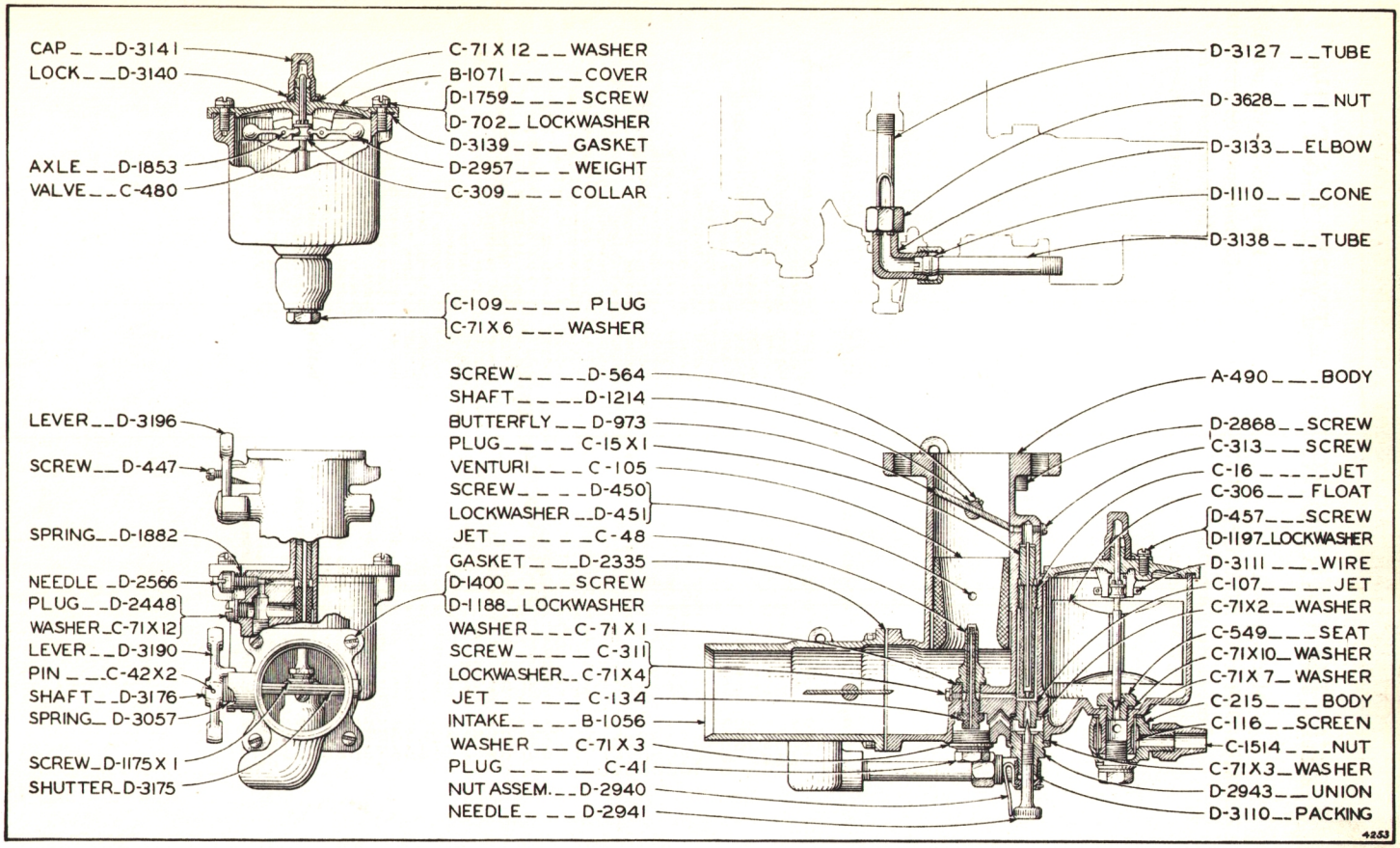


CATERPILLAR NO. 22124

# ZENITH CARBURETOR TYPE L-7-T, 1¾"

Manufacturer
ZENITH-DETROIT CORPORATION
Foot of Hart Avenue
Detroit, Michigan

For Parts Service on this Carburetor Order from the Manufacturer or his Representative

| PART No. | DESCRIPTION |
|---|---|
| A-470 | Carburetor Body |
| B-1026 | Air Intake |
| B-1071 | Float Cover |
| C-15x2 | Priming Plug Assembly |
| C-41 | Lower Plug |
| C-42x 1 | Air Shutter Lever Taper Pin |
| C-42x 1 | Butterfly Lever Taper Pin |
| C-71x 1 | Main Jet Washer |
| C-71x 1 | Cap Jet Washer |
| C-71x 2 | Compensating Jet Washer |
| C-71x 3 | Lower Plug Washer |
| C-71x 5 | Channel Screw Washer |
| C-71x 6 | Filter Plug Washer |
| C-71x 7 | Union Body Washer |
| C-71x10 | Needle Valve Seat Washer |
| C-71x12 | Dust Cap Washer |
| C-71x12 | Well Plug Washer |
| C-102 | Channel Hole Plug |
| C-107 | Compensator Jet (Specify Size) |
| C-109 | Filter Plug |
| C-116 | Filter Plug Screen |
| C-139 | Idling Jet (Specify Size) |
| C-151 | Venturi (Specify Size) |
| C-306 | Float |
| C-309 | Needle Valve Collar |
| C-313 | Priming Hole Screw |
| C-317 | Cap Jet |
| C-318 | Main Jet (Specify Size) |
| C-480 | Needle Valve |
| C-549 | Needle Valve Seat (Specify Size) |
| C-951 | Union Body |
| C-1371 | Butterfly |
| C-1583 | Throttle Butterfly Retaining Screw |
| D-447 | Butterfly Clamp Screw |
| D-449 | Intake Assembly Screw |
| D-450 | Venturi Screw |
| D-451 | Venturi Screw Lockwasher |
| D-457 | Dust Cap Lock Anchor Screw |
| D-702 | Air Intake Assembly Lockwasher |
| D-702 | Bowl Cover Screw Lockwasher |
| D-1103 | Union Body Nut |
| D-1110 | Air Line Cone |

| PART No. | DESCRIPTION |
|---|---|
| D-1175x1 | Air Shutter Set Screw |
| D-1197 | Dust Cap Lock Anchor Lockwasher |
| D-1759 | Cover Screw |
| D-1853 | Float Weight Axle |
| D-1882 | Idling Needle Valve Spring |
| D-2448 | Well Tube Plug |
| D-2566 | Idling Adjusting Needle |
| D-2606 | Butterfly Shaft |
| D-2849 | Air Shutter |
| D-2865 | Air Intake Shutter Shaft |
| D-2866 | Air Intake Gasket |
| D-2868 | Butterfly Stop Screw |
| D-2940 | Packing Nut Assembly |
| D-2941 | Jet Adjustment Needle |
| D-2942 | Idling Adjustment Assembly |
| D-2943 | Packing Union |
| D-2944 | Butterfly Lever |
| D-2946 | Air Shutter Lever |
| D-2957 | Float Weight |
| D-3057 | Air Shutter Spring |
| D-3110 | Adjusting Needle Packing |
| D-3111 | Float Weight Axle Lock Wire |
| D-3133 | Air Line Elbow |
| D-3134 | Air Line Elbow Assembly |
| D-3137 | Barrel Air Line Tube |
| D-3138 | Intake Air Line Tube |
| D-3139 | Bowl Cover Gasket |
| D-3140 | Dust Cap Lock |
| D-3141 | Dust Cap |
| D-3628 | Air Line Tube Nut |
| D-2942 | Special Assembly<br>Consisting of:<br>D-2940 Packing Nut Assembly<br>D-2941 Adjusting Needle<br>D-2943 Packing Nut Assembly<br>D-3110 Packing |
| D-3134 | Special Assembly<br>Consisting of:<br>2 D-1110 Air Line Cone<br>1 D-3133 Air Line Elbow<br>2 D-3628 Air Line Nut |

Numbers shown are manufacturer's, not "Caterpillar" Part numbers, except when specified.

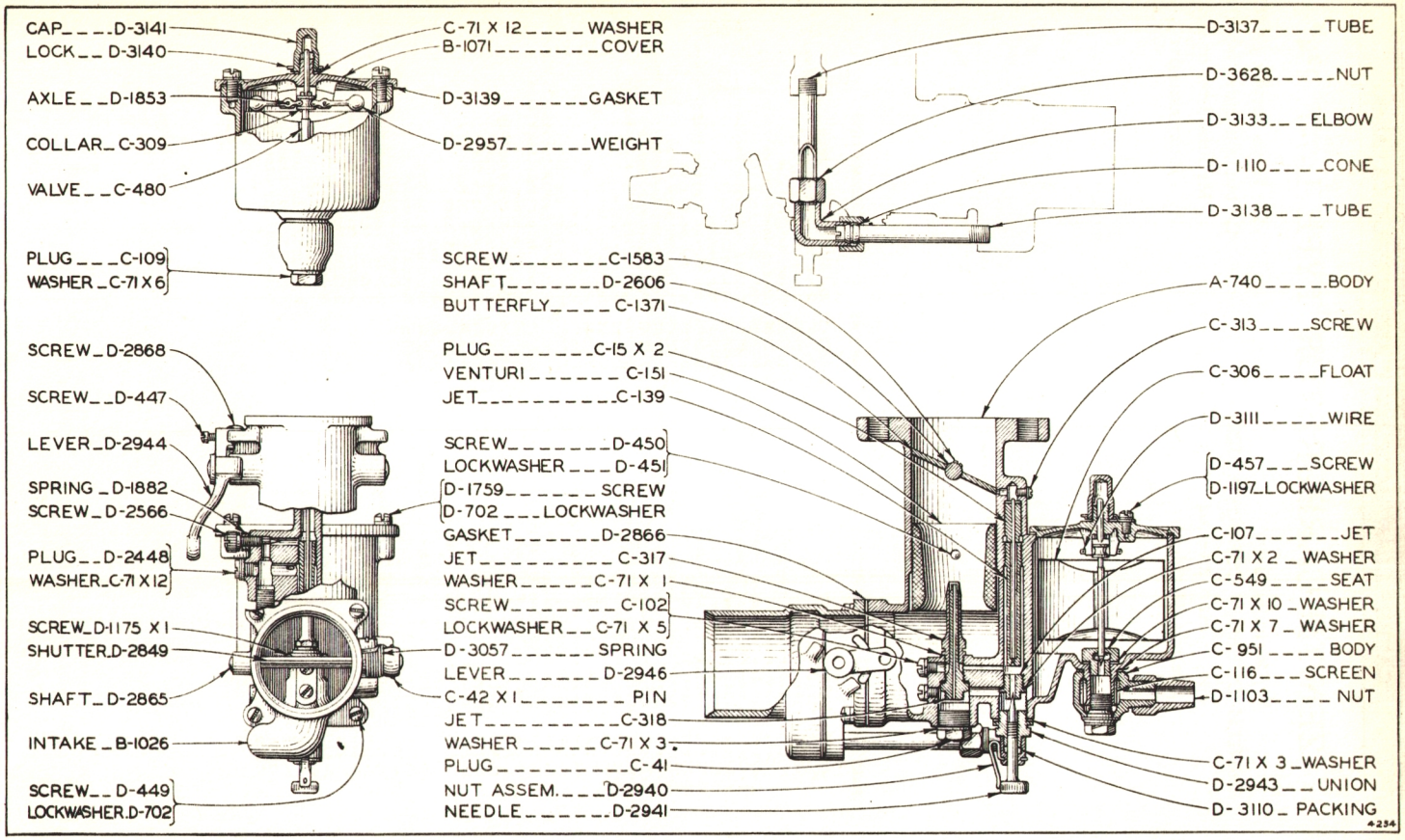


CATERPILLAR NO. 19258

# ENSIGN CARBURETOR—TYPE BeTb, 1"

Manufacturer
ENSIGN CARBURETOR CO., LTD.
7010 S. Alameda Str. or 450 East Ohio Str.
Huntington Park, Calif. Chicago, Ill.

For Parts Service on this Carburetor Order from the Manufacturer or his Representative

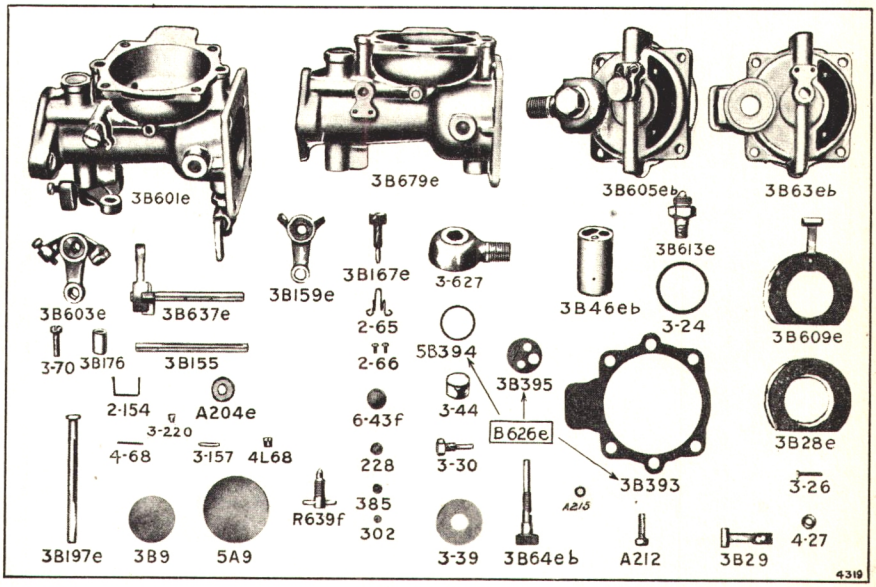


## CATERPILLAR NO. 1B1307

| PART No. | DESCRIPTION |
|---|---|
| 3B9 | Throttle disc |
| 5A9 | Choke disc |
| 3-24 | Strainer cage gasket |
| 3-26 | Float lever screw |
| 4-27 | Float lever screw washer |
| 3B28e | Cork float |
| 3B29 | Float lever |
| 3-30 | Float lever pivot |
| 3-39 | Strainer cage screen |
| 6-43f | 1/2" Welch plug |
| 3-44 | Strainer cage nut |
| 3B46eb | Fuel control |
| 3B63eb | Fuel bowl cover |
| 3B64eb | Fuel adjusting screw |
| 2-65 | Adjustment retainer (2 used in Carb.) |
| 2-66 | Retainer screws (4 used in Carb.) |
| 4-68 | Throttle stop pin |
| 3-70 | Throttle stop adjusting screw |
| 2-154 | Disc staples (2 used in Carb.) |
| 3B155 | Choke shaft |
| 3-157 | Choke lever pin |
| 3B159e | Choke lever |
| 3B167e | Idling adjustment screw |
| 3B176 | Throttle bearing bushings (2 used in Carb.) |
| 3B197e | Throttle shaft and head |

| PART No. | DESCRIPTION |
|---|---|
| A204e | Throttle dust washer (2 used in Carb.) |
| A212 | Fuel bowl cover screws (2 used in Carb.) |
| A215 | Fuel bowl cover screw lock washers (4 used in Carb. |
| 3-220 | Screw plug |
| 228 | 5/16" Welch plugs (2 used in Carb.) |
| 302 | 3/16" Welch plugs (5 used in Carb.) |
| 385 | 1/4" Welch plugs (4 used in Carb.) |
| **Bleeds:** | |
| 4L68 | "L" Bleed screw |
| **Assemblies:** | |
| 3B601e | Throttle tube assembly |
| 3B603e | Throttle stop lever assembly |
| 3B605eb | Fuel bowl cover assembly |
| 3B609e | Float assembly (Cork) |
| 3B613e | Float valve assembly |
| B626e | Control and bowl gasket assembly (Made up of 5B394, 3B395 and 3B393) (Separate parts not serviced) |
| 3-627 | Strainer cage assembly (1/8"Male I.P.T.) |
| 3B637e | Choke shaft and stop assembly |
| R639f | Drain cock needle and handle assembly |
| 3B679e | Throttle tube and venturi nozzle assembly |

For Drain Filter see Page 17

Numbers shown are manufacturer's, not "Caterpillar" Part numbers, except when specified.

# ENSIGN CARBURETOR—TYPE BeVb, 1"

Manufacturer
ENSIGN CARBURETOR CO., LTD.
7010 S. Alameda Str. or 450 East Ohio Str.
Huntington Park, Calif. Chicago, Ill.

For Parts Service on this Fuel Cleaner Order from the Manufacturer or his Representative

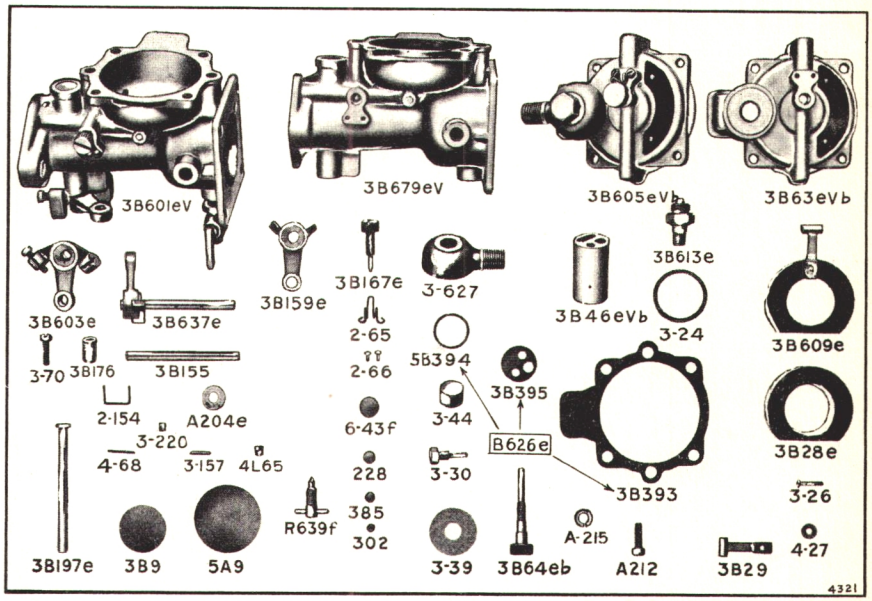


## CATERPILLAR NO. 1B1404

| PART No. | DESCRIPTION |
|---|---|
| 3B9 | Throttle disc |
| 5A9 | Choke disc |
| 3-24 | Strainer cage gasket |
| 3-26 | Float lever screw |
| 4-27 | Float lever screw washer |
| 3B28e | Cork float |
| 3B29 | Float lever |
| 3-30 | Float lever pivot |
| 3-39 | Strainer cage screen |
| 6-43f | 1/2" Welch plug |
| 3-44 | Strainer cage nut |
| 3B46eVb | Fuel control |
| 3B63eVb | Fuel bowl cover |
| 3B64eb | Fuel adjusting screw |
| 2-65 | Adjustment retainer (2 used in Carb.) |
| 2-66 | Retainer screws (4 used in Carb.) |
| 4-68 | Throttle stop pin |
| 3-70 | Throttle stop adjusting screw |
| 2-154 | Disc staples (2 used in Carb.) |
| 3B155 | Choke shaft |
| 3-157 | Choke lever pin |
| 3B159e | Choke lever |
| 3B167e | Idling adjustment screw |
| 3B176 | Throttle bearing bushings (2 used in Carb.) |
| 3B197e | Throttle shaft and head |

| PART No. | DESCRIPTION |
|---|---|
| A204e | Throttle dust washer (2 used in Carb.) |
| A212 | Fuel bowl cover screws (4 used in Carb.) |
| A215 | Fuel bowl cover screw washers (4 used in Carb.) |
| 3-220 | Screw plug |
| 228 | 5/16" Welch plug (2 used in Carb.) |
| 302 | 3/16" Welch plug (5 used in Carb.) |
| 385 | 1/4" Welch plugs (4 used in Carb.) |
| **Bleeds:** | |
| 4L65 | "L" Bleed screw |
| **Assemblies:** | |
| 3B601eV | Throttle tube assembly |
| 3B603e | Throttle stop lever assembly |
| 3B605eVb | Fuel bowl cover assembly |
| 3B609e | Float assembly (Cork) |
| 3B613e | Float valve assembly |
| B626e | Control and bowl gasket assembly (Made up of 3B393, 5B394 and 3B395) (Separate parts not serviced) |
| 3-627 | Strainer cage assembly (¼"Male I.P.T.) |
| 3B637e | Choke shaft & stop assembly |
| R639f | Drain cock needle & handle assembly |
| 3B679eV | Throttle tube and venturi nozzle assembly |

For Drain Filter see Page 17

Numbers shown are manufacturer's, not "Caterpillar" Part numbers, except when specified.

# STROMBERG CARBURETOR—TYPE MP-3, (SPECIAL) 1½"

Manufacturer
BENDIX-STROMBERG CARBURETOR CO.
South Bend, Indiana

For Parts Service on this Carburetor Order from the Manufacturer or his Representative

| PART No. | DESCRIPTION |
|---|---|
| P-26 | Main Gas Channel Plug |
| P-109 | Float Chamber Cover Screws |
| P-200 | Strainer Body Drain Cock |
| P-285 | Throttle Valve Screws |
| P-1693 | Throttle Valve Screw Lockwasher |
| P-1791 | Float Chamber Cover Screw Lockwasher |
| P-2290 | Large Venturi Tube Set Screw Nut |
| P-3157 | Large Venturi Tube Set Screw Lockwasher |
| P-3157 | Throttle Lever Clamp Screw Lockwasher |
| P-4437 | Large Venturi Tube Set Screw (Headless) |
| P-4729 | Throttle Lever Clamp Screw Nut |
| P-5276 | Float Needle Valve Seat Gasket |
| P-5418 | Small Venturi Tube Channel Plug |
| P-5418 | Lower Air Bleeder Channel Plug |
| P-5436 | Throttle Valve |
| P-5439 | Small Venturi Tube Gasket |
| P-5530 | Strainer |
| P-5554 | Strainer Body |
| P-5636 | Idle Tube Holder Gasket |
| P-6220 | Strainer Body Stud |
| P-6237 | Float Needle Valve Lock Nut |
| P-6253 | Float |
| P-6358 | Needle Valve Seat |
| P-6375 | Float Needle Valve Seat Nut |
| P-6376 | Float Needle Valve |
| P-6387 | Upper Bleeder Channel Plug |
| P-6675 | High Speed Needle Valve Adjustment |
| P-6675 | Idling Needle Valve Adjustment |
| P-7034 | Small Venturi Tube |
| P-7036 | Idling Discharge Jet |
| P-7039 | Idle Tube with Holder |
| P-7230 | Accelerating Gas Well |
| P-7311 | Float Support |
| P-7872 | Main Body Plug |
| P-9581 | Throttle Lever with Clamp Screw |
| P-9588 | Throttle Stem Bushing (Body) |
| P-9593 | Main Body |
| P-9598 | Throttle Lever Stem |
| P-9628 | Air Reducer (Acc. Well Bleeder) |
| P-9629 | Idling Needle Valve (Complete) |
| P-9630 | High Speed Needle Valve (Complete) |
| P-9632 | Float Chamber Cover with Levers and Primer |
| P-9633 | Large Venturi Tube |
| P-9638 | Needle Valve Cap |
| P-10012 | Throttle Lever Clamp Screw |
| P-10848 | Large Venturi Tube Screw (Hex. Head) |

Numbers shown are manufacturer's, not "Caterpillar" Part numbers.

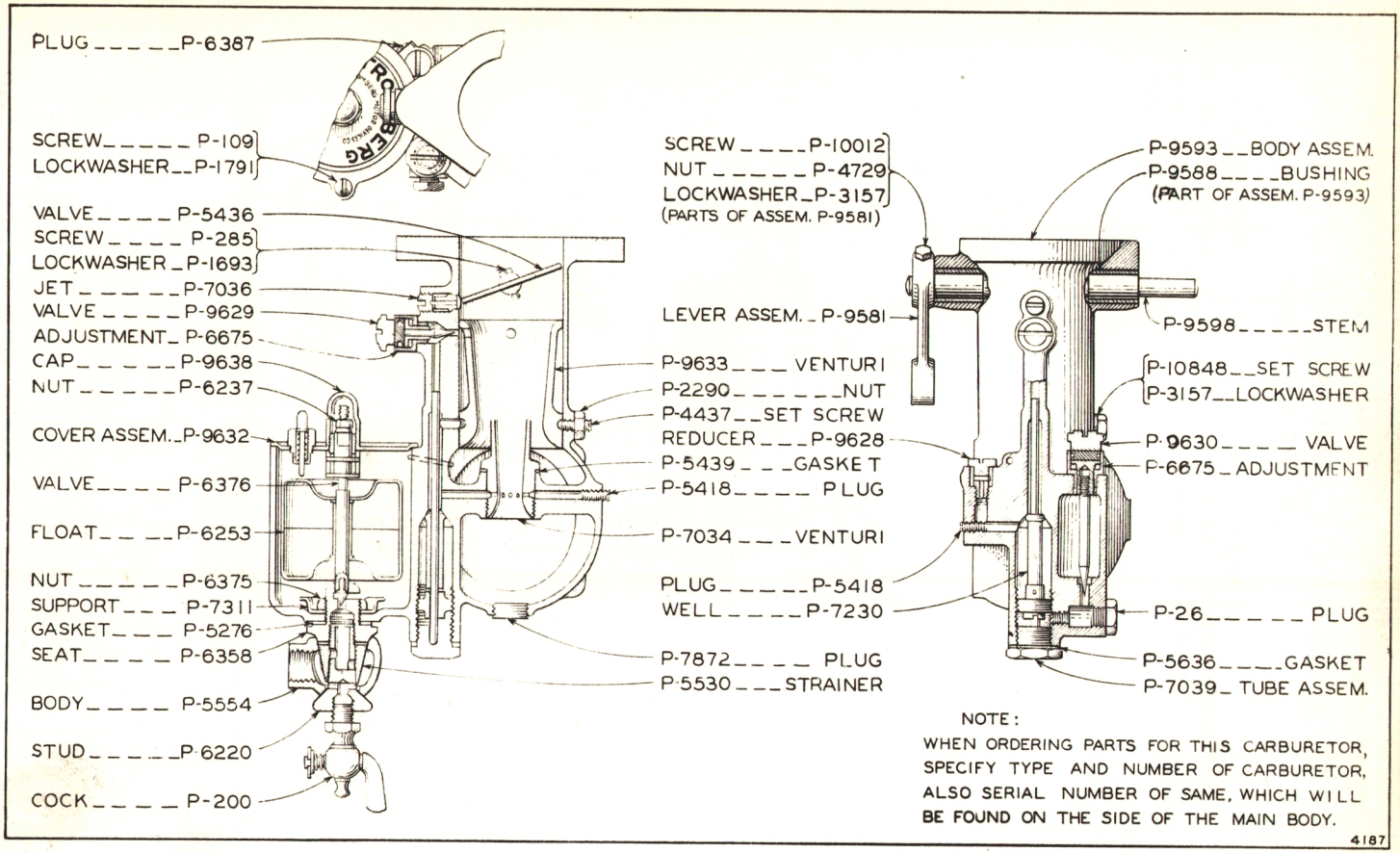


STROMBERG NO. A-9173x2

# STROMBERG CARBURETOR—TYPE MT-4, (SPECIAL) 1¾"

Manufacturer
BENDIX-STROMBERG CARBURETOR CO.
South Bend, Indiana

For Parts Service on this Carburetor Order from the Manufacturer or his Representative

| PART No. | DESCRIPTION |
|---|---|
| P-26 | Main Gas Channel Plug |
| P-46 | Float Chamber Cover Screws |
| P-200 | Strainer Drain Cock |
| P-285 | Throttle Valve Screws |
| P-1693 | Throttle Valve Screw Lockwasher |
| P-1791 | Float Chamber Cover Screw Lockwasher |
| P-2290 | Large Venturi Tube Set Screw Nut |
| P-3157 | Large Venturi Tube Set Screw Lockwasher |
| P-3664 | Float Needle Valve Lock Nut |
| P-4437 | Large Venturi Tube Set Screw (Headless) |
| P-5276 | Float Needle Valve Seat Gasket |
| P-5418 | Lower Air Bleeder Channel Plug |
| P-5429 | Idle Tube Holder Gasket |
| P-5439 | Small Venturi Tube Gasket |
| P-6010 | Float |
| P-6052 | Large Venturi Tube |
| P-6053 | Accelerating Gas Well |
| P-6055 | Throttle Valve |
| P-6057 | Small Venturi Tube |
| P-6202 | Accelerating Gas Well Channel Plug |
| P-6202 | Small Venturi Tube Channel Plug |
| P-6350 | Idle Tube with Holder |
| P-6377 | Float Needle Valve |
| P-6387 | Upper Air Bleeder Channel Plug |
| P-6559 | Float Chamber Vent. Screw Gasket |
| P-6675 | Idling Needle Valve Adjustment |
| P-7036 | Idling Discharge Jet |
| P-7605 | Float Support |
| P-8877 | Strainer |
| P-8878 | Strainer Spring |
| P-8880 | Strainer Plug Gasket |
| P-8962 | Strainer Plug |
| P-9585 | Throttle Stem Bushings (Body) |
| P-9597 | Throttle Lever Stem |
| P-9619 | Idling Needle Valve Complete |
| P-9628 | Air Reducer (ACC. Well Bleeder) |
| P-9639 | Needle Valve Cap |
| P-10024 | Main Body |
| P-10025 | Float Chamber Vent. Screw |
| P-10031 | High Speed Needle Valve (Complete) |
| P-10034 | Float Chamber Cover Gasket |
| P-10035 | Float Chamber Cover with Levers and Primer |
| P-10043 | Float Needle Valve Seat |
| P-10848 | Large Venturi Tube Set Screw (Hex. Head) |

Numbers shown are manufacturer's, not "Caterpillar" Part numbers, except when specified.

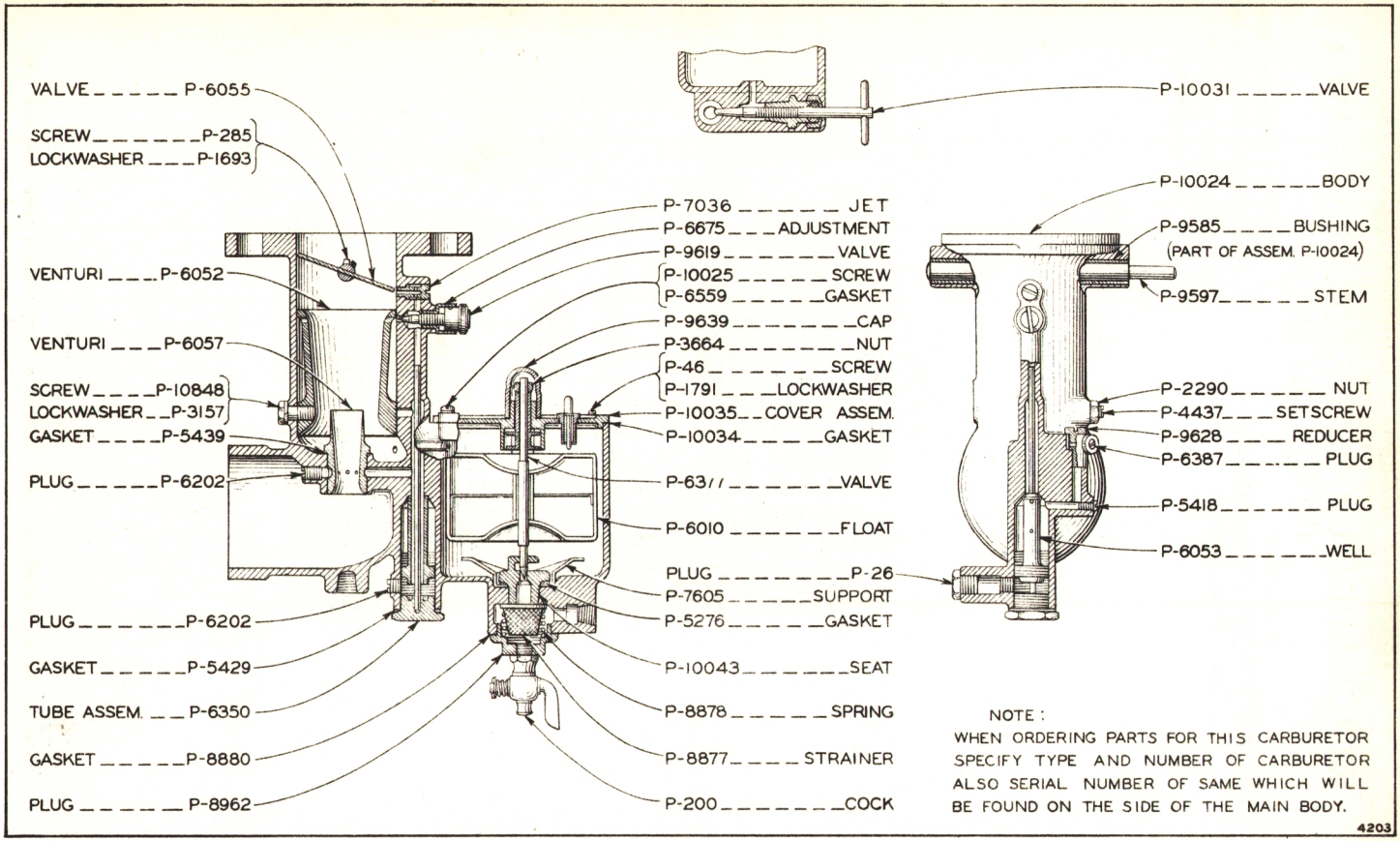


CATERPILLAR NO. 2673-A

# STROMBERG CARBURETOR—TYPE M4-SPECIAL, 1¾"

Manufacturer
BENDIX-STROMBERG CARBURETOR CO.
South Bend, Indiana

For Parts Service on this Carburetor Order from the Manufacturer or his Representative

| | |
|---|---|
| P-26 | Main Gasoline Channel Plug |
| P-46 | Float Chamber Cover Screws |
| P-200 | Strainer Body Drain Cock |
| P-285 | Throttle Valve Screws |
| P-1693 | Throttle Valve Screw Lockwashers |
| P-1791 | Float Chamber Cover Screw Lockwashers |
| P-2290 | Large Venturi Tube Set Screw Nut |
| P-3157 | Large Venturi Tube Set Screw Lockwasher |
| P-3664 | Float Needle Valve Lock Nut |
| P-4437 | Large Venturi Tube Screw (Headless) |
| P-5276 | Float Needle Valve Seat Gasket |
| P-5418 | Lower Air Bleeder Channel Plug |
| P-5429 | Idle Tube Holder Gasket |
| P-5439 | Small Venturi Tube Gasket |
| P-5530 | Strainer |
| P-5554 | Strainer Body |
| P-6010 | Float |
| P-6052 | Large Venturi Tube |
| P-6053 | Accelerating Gas Well |
| P-6055 | Throttle Valve |
| P-6057 | Small Venturi Tube |
| P-6202 | Small Venturi Tube Channel Plug |
| P-6220 | Strainer Body Stud |
| P-6350 | Idle Tube with Holder |
| P-6375 | Float Needle Valve Seat Nut |
| P-6377 | Float Needle Valve |
| P-6387 | Upper Air Bleeder Channel Plug |
| P-6675 | Idling Needle Valve Adjustment |
| P-6675 | High Speed Needle Valve Adjustment |
| P-7036 | Idling Discharge Jet |
| P-7529 | Float Needle Valve Seat (Complete) |
| P-7605 | Float Support |
| P-8993 | Large Venturi Tube Set Screw (Hex. Head) |
| P-9584 | Main Body |
| P-9585 | Throttle Stem Bushings |
| P-9597 | Throttle Lever Stem |
| P-9619 | Idling Needle Valve (Complete) |
| P-9623 | High Speed Needle Valve (Complete) |
| P-9627 | Float Chamber Cover with Lever and Primer |
| P-9628 | Air Reducer (ACC. Well Bleeder) |
| P-9639 | Needle Valve Cap |

Numbers shown are manufacturer's, not "Caterpillar" Part numbers, except when specified.

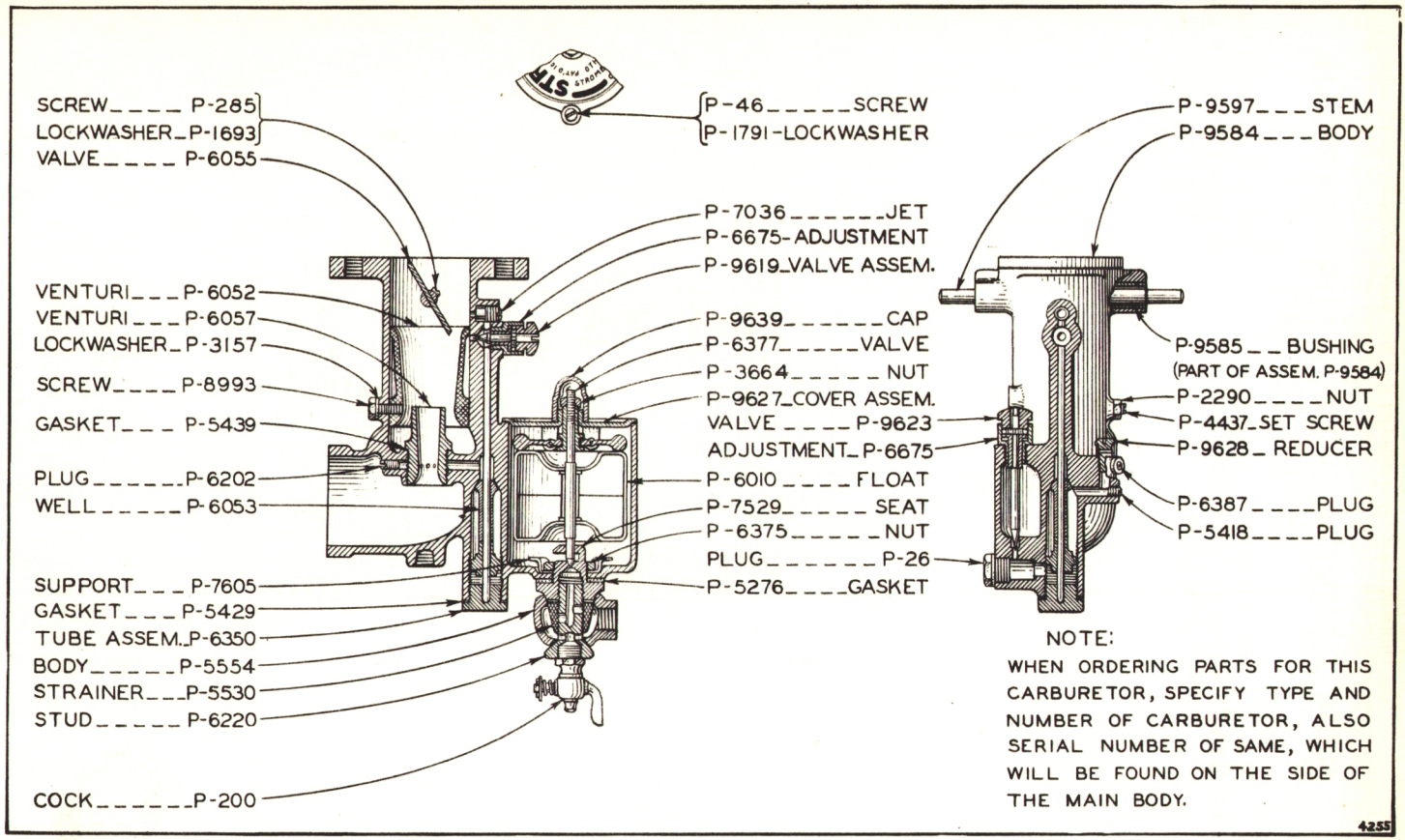


# STROMBERG MODEL M4 SPECIAL - $1\frac{3}{4}$

# STROMBERG AIR CLEANER NO. P-9062

Manufacturer
BENDIX-STROMBERG CARBURETOR CO.
South Bend, Indiana

For Parts Service on this Air Cleaner Order from the Manufacturer or his Representative

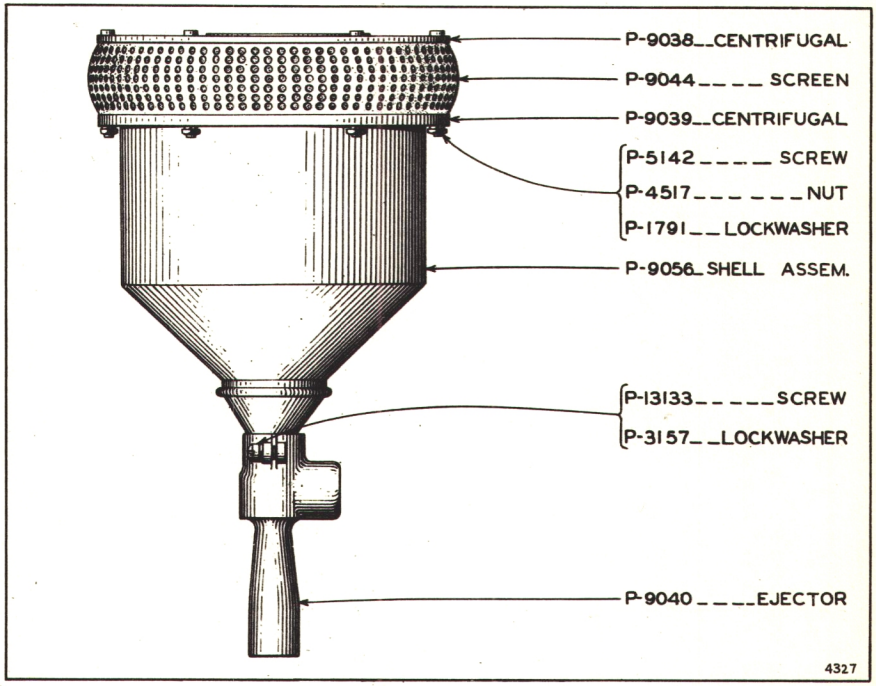


CATERPILLAR NO. 17653

| PART No. | DESCRIPTION |
|---|---|
| P-1791 | Centrifugal Clamp Screw Lock Washer |
| P-4517 | Centrifugal Clamp Screw Nut |
| P-5142 | Centrifugal Clamp Screw |
| P-13133 | Ejector Clamp Screw |
| P-3157 | Ejector Clamp Screw Lock Washer |
| P-9038 | Centrifugal (Upper) |
| P-9039 | Centrifugal (Lower) |
| P-9040 | Ejector |
| P-9044 | Screen |
| P-9056 | Shell and Nozzle, Complete |
| P-9425 | Name Plate |
| P-9802 | Name Plate Rivets |

# STROMBERG AIR CLEANER NO. P-10470

Caterpillar Parts No. 22161 (Separate parts only, serviced)
Consisting of:
1- P-9056 Shell and Nozzle, Complete
1- P-9040 Ejector
1- P-13133 Clamp Screw
1- P-3157 Lockwasher
For illustrations see above.

Numbers shown are manufacturer's, not "Caterpillar" Part numbers, except when specified.

# STROMBERG AIR CLEANER NO. P-9099

Manufacturer
BENDIX-STROMBERG CARBURETOR CO.
South Bend, Indiana

For Parts Service on this Air Cleaner Order from the Manufacturer or his Representative

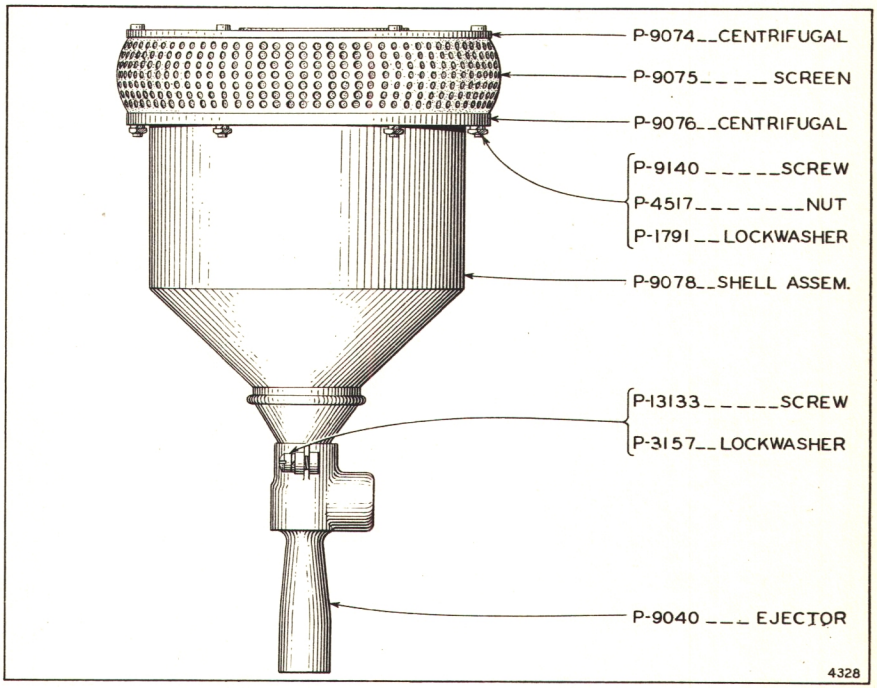


CATERPILLAR NO. 17851

| PART No. | DESCRIPTION |
|---|---|
| P-1791 | Centrifugal Clamp Screw Lock Washers |
| P-4517 | Centrifugal Clamp Screw Nut |
| P-13133 | Ejector Clamp Screw |
| P-3157 | Ejector Clamp Screw Lock Washer |
| P-9040 | Ejector |
| P-9074 | Centrifugal (Upper) |
| P-9075 | Screen |
| P-9076 | Centrifugal (Lower) |
| P-9078 | Shell and Nozzle, Complete |
| P-9140 | Centrifugal Clamp Screw |
| P-9425 | Name Plate |
| P-9802 | Name Plate Rivets |

Numbers shown are manufacturer's, not "Caterpillar" Part numbers, except when specified.

# STROMBERG AIR CLEANER NO. P-9830

Manufacturer
BENDIX-STROMBERG CARBURETOR CO.
South Bend, Indiana

For Parts Service on this Air Cleaner Order from the Manufacturer or his Representative

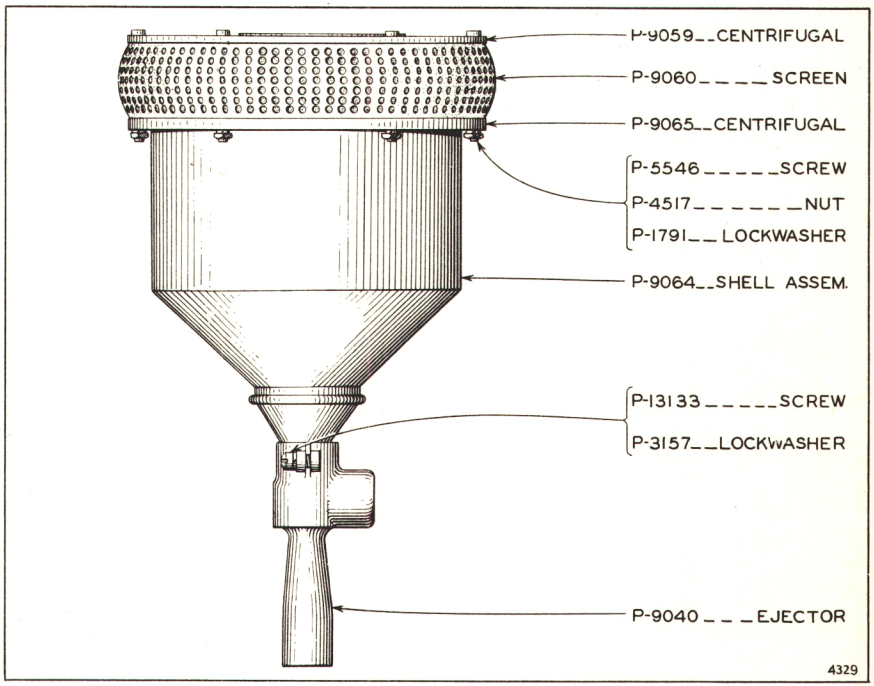


CATERPILLAR NO. 170165

| PART No. | DESCRIPTION |
|---|---|
| P-1791 | Centrifugal Clamp Screw Lock Washer |
| P-4517 | Centrifugal Clamp Screw Nuts |
| P-5546 | Centrifugal Clamp Screws |
| P-13133 | Ejector Clamp Screw |
| P-3157 | Ejector Clamp Screw Lock Washer |
| P-9040 | Ejector |
| P-9059 | Centrifugal (Upper) |
| P-9060 | Screen |
| P-9064 | Shell and Nozzle, Complete |
| P-9065 | Centrifugal (Lower) |
| P-9425 | Name Plate |
| P-9802 | Name Plate Rivet |

Numbers shown are manufacturer's, not "Caterpillar" Part numbers, except when specified.

# VORTOX AIR CLEANER No. 270

Manufacturer
VORTOX MANUFACTURING CO.
Claremont, Calif.

For Parts Service on this Air Cleaner Order from the Caterpillar Tractor Co., Peoria, Ill.

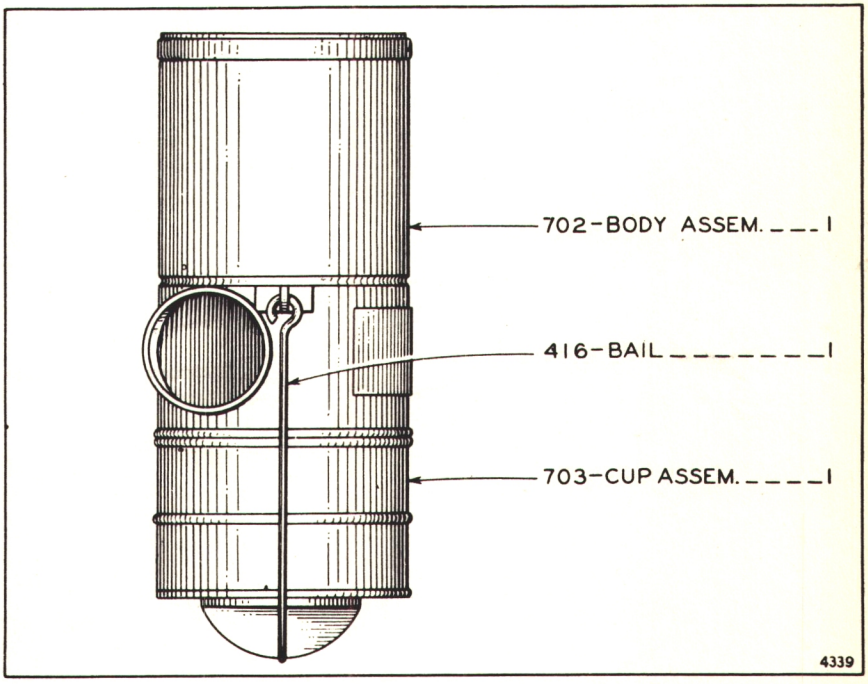


CATERPILLAR NO. AM-3397

Numbers shown are manufacturer's, not "Caterpillar" part numbers, except when specified.

Form 1736 Printed in U.S.A.

# WHEELER-SCHEBLER CARBURETOR TYPE A, 1½"

Manufacturer
THE WHEELER-SCHEBLER CARBURETOR CO.

For Parts Service on this Carburetor Order from Caterpillar Tractor Co. Peoria, Illinois

| PART No. | DESCRIPTION |
|---|---|
| 0 | Throttle Shaft Gasket |
| 1-0 | Air Valve Shutter Spring |
| SK-1 | No. 10-32 Standard Fillister Head Brass Machine Screw (for Float Bowl Lid) |
| SI-2 | Lever Stop Adjusting Screw |
| SC-2 | Flange Cap Screw |
| SJ-7 | Throttle Stop Adjusting Screw |
| SJ-12 | Throttle Disc Screw |
| SI-18 | Throttle Disc Screw |
| A-24 | Strainer Housing |
| A-25 | Venturi |
| P-26 | Air Intake Shutter |
| S-84 | Venturi and Air Intake Locking Screw |
| S-93 | Air Intake Ell Cap Retaining Screw |
| S-256H | Float Arm Bracket Pin |
| P-359 | Nozzle Casing Gasket |
| P-400 | Throttle Disc |
| P-406 | Air Intake Ell Cap |
| S-564 | Float Valve Guide (Bottom) |
| S-566 | Float Valve Cap |
| S-567 | Float Arm |
| S-569 | Body Plug Gasket |
| S-581 | Body Plug |
| S-672 | Nozzle Head Casing |
| S-673 | Head Nozzle Retainer Screw |
| S-750 | 3/16" Std. Light S.A.E. Lock Washer (For Float Bowl Lid) |
| X-1030 | Strainer Assembly (Separate Parts Not Serviced) |
| X-1045 | Float Assembly (Separate Parts Not Serviced) |
| X-1052 | Body Assembly |
| X-1054 | Float Bowl Lid Assembly (Separate Parts Not Serviced) |
| X-1057 | Float Needle Valve Assembly (Separate Parts Not Serviced) |
| X-1059 | Throttle Lever Assembly |
| X-1060 | Air Intake Shutter Shaft and Lever Assembly (Separate Parts Not Serviced) |
| X-1061 | Air Intake Ell Assembly |
| X-1062 | Throttle Shaft and Collar Assembly (Separate Parts Not Serviced) |
| X-1098 | Float Bowl Lid Assembly |
| S-1121 | Drain Cock Complete |
| S-1238 | Float Arm Pin (Long. Two Point) |
| X-1317 | Idling Needle Valve Assembly (Separate Parts Not Serviced) |
| X-1318 | Throttling Needle Valve Assembly (Separate Parts Not Serviced) |
| X-1574 | Nozzle Head Assembly (Separate Parts Not Serviced) |

Numbers shown are manufacturer's, not "Caterpillar" Part numbers, except when specified.

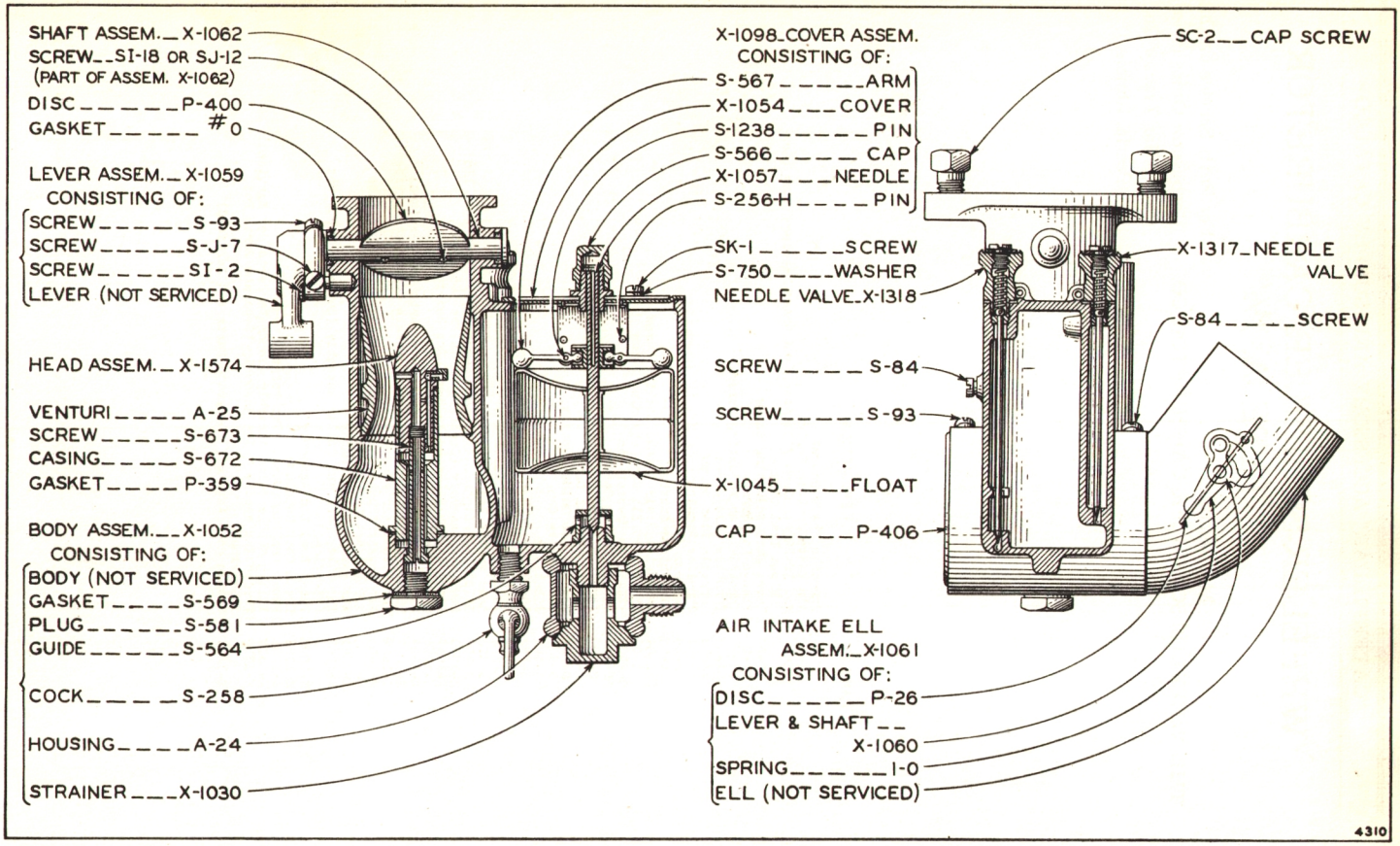


CATERPILLAR NO. 61470

# WHEELER-SCHEBLER CARBURETOR

## TYPE D,¾"

Manufacturer
THE WHEELER-SCHEBLER CARBURETOR CO.
1910 St. John Str.
Flint, Michigan

For Parts Service on this Carburetor Order from the Manufacturer or his Representative

| PART No. | DESCRIPTION |
|---|---|
| D-2-E | Bowl |
| # 3 | Bowl Lid Cork Gasket |
| S-3 | Needle Valve Connection |
| D-4 | Float Lever |
| S-4 | Needle Valve Packing Nut |
| S-5 | Nozzle |
| P-9 | Throttle Disc |
| X-11 | Air Valve Leather Disc Assembly |
| 15-H | Air Valve Spring |
| 15-23 | Throttle Disc Screw |
| 15-28 | Throttle Stop Adj. Screw |
| 15-39 | Throttle Stop Adj. Screw |
| 15-208 | Bowl Lid Screw |
| 16-14 | Float Valve Seat Gasket |
| 25-Z | Throttle Stop Screw Spring |
| X-31 | Float Assembly |
| # 36 | Bowl Cap Gasket |
| S-41 | Float Valve Retainer Nut |
| S-46-B | Float Lever Bearing |
| X-154 | Float Valve |

| PART No. | DESCRIPTION |
|---|---|
| 179-10 | Throttle Body Welsh Plug |
| X-200 | Bowl Cap Assembly |
| S-257 | Needle Valve Packing |
| S-267-A | Lockwasher |
| S-319-A | Union |
| D-348 | Air Valve |
| S-1043 | Air Valve Guide Screw Lockwasher |
| P-1096 | Throttle Body to Bowl Lid Gasket |
| S-1098 | Throttle Shaft Bushing |
| P-1104 | Bowl Lid to Bowl Gasket |
| P-1106 | Air Valve to Bowl Gasket |
| S-1121 | Drain Plug |
| X-1178 | Float Screw Assembly |
| S-2392 | Float Lever Bearing Pin |
| S-2393 | Float Valve Seat |
| S-2406 | Bowl Lid Screw Washer |
| X-2632 | Needle Valve Assembly |
| S-2635 | Air Valve Guide Screw Assembly |
| X-2637 | Air Valve Assembly |
| X-2638 | Bowl Lid Assembly |
| X-2662 | Throttle Body Assembly |
| X-2667 | Throttle Shaft and Lever Assembly |

Numbers shown are manufacturer's, not "Caterpillar" Part numbers, except when specified.

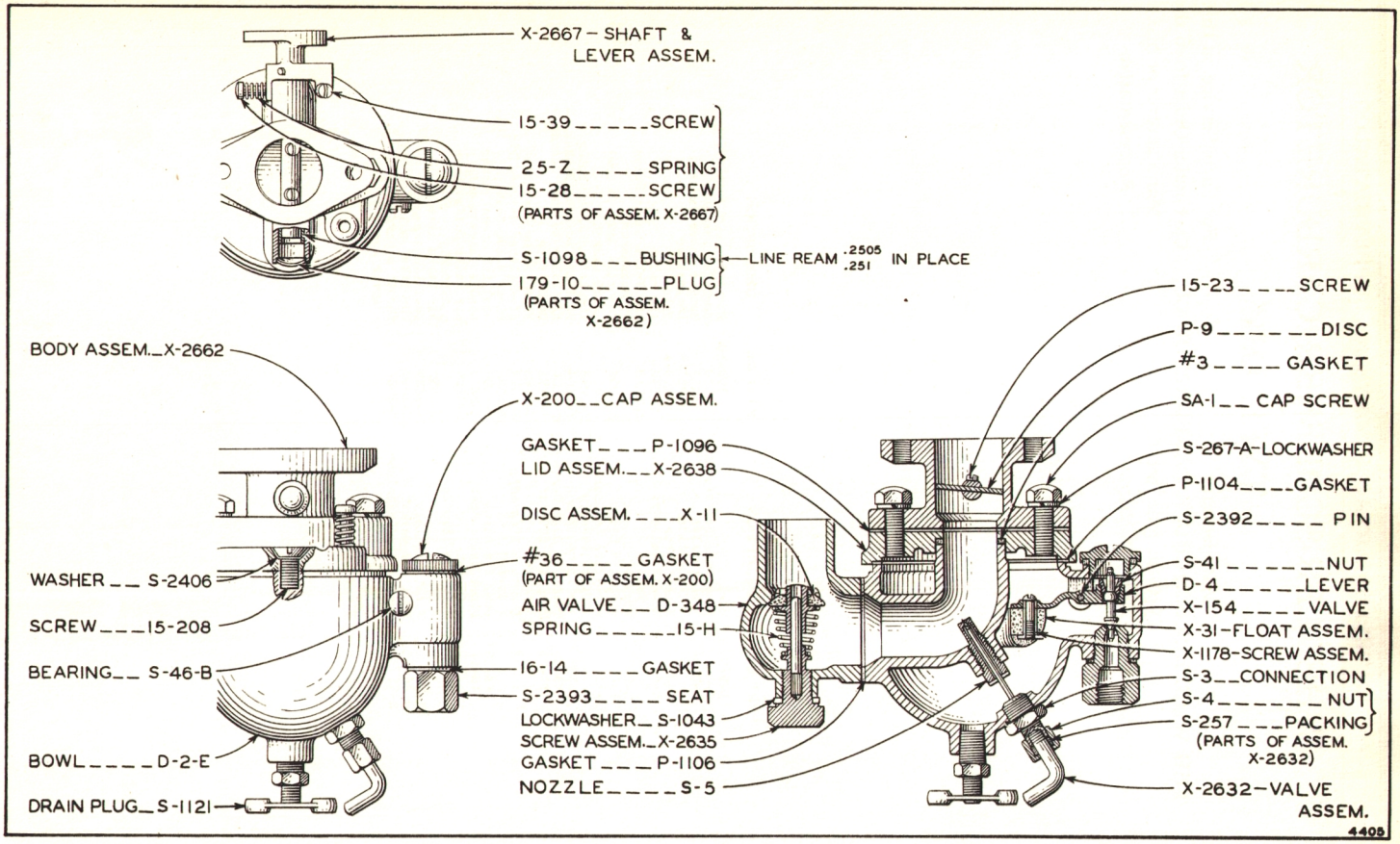


CATERPILLAR NO 2A600

# LIFT THE DOT FASTENERS

Manufacturer
UNITED CARR FASTENER CORP.
31 Ames Str.
Cambridge, Mass.

For Parts Service on these Fasteners Order from the Manufacturer or his Representative

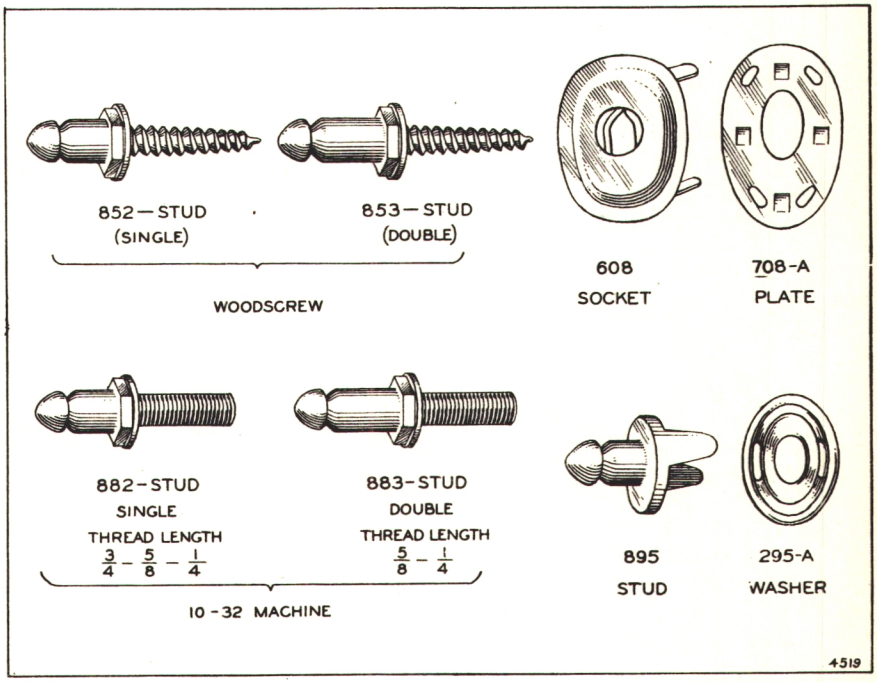


Numbers Shown Are Manufacturers, Not "Caterpillar" Part Numbers, Except When Specified.

# TWIN DISC CLUTCH TYPE A

Manufacturer
TWIN DISC CLUTCH CO.
Racine, Wisconsin

For Parts Service on this Clutch Order from the Caterpillar Tractor Co., Peoria, Ill.

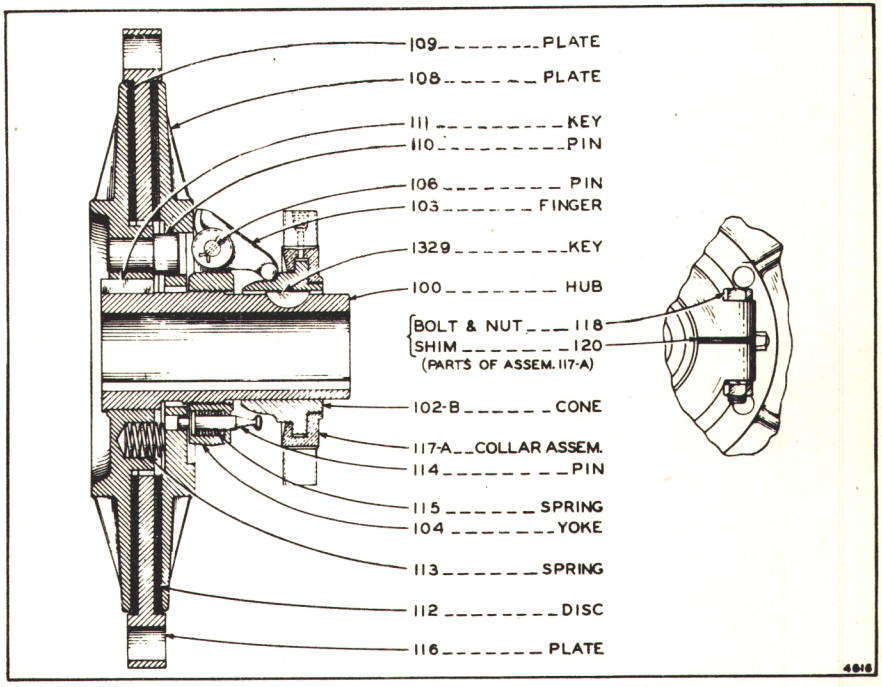


CATERPILLAR NO. 166417

Numbers Shown Are Manufacturers, Not Caterpillar" Part Numbers, Except When Specified.

# TWIN DISC CLUTCH TYPE A-9

Manufacturer
TWIN DISC CLUTCH CO.
Racine, Wisconsin

For Parts Service on this Clutch Order from the Caterpillar Tractor Co., Peoria, Ill.

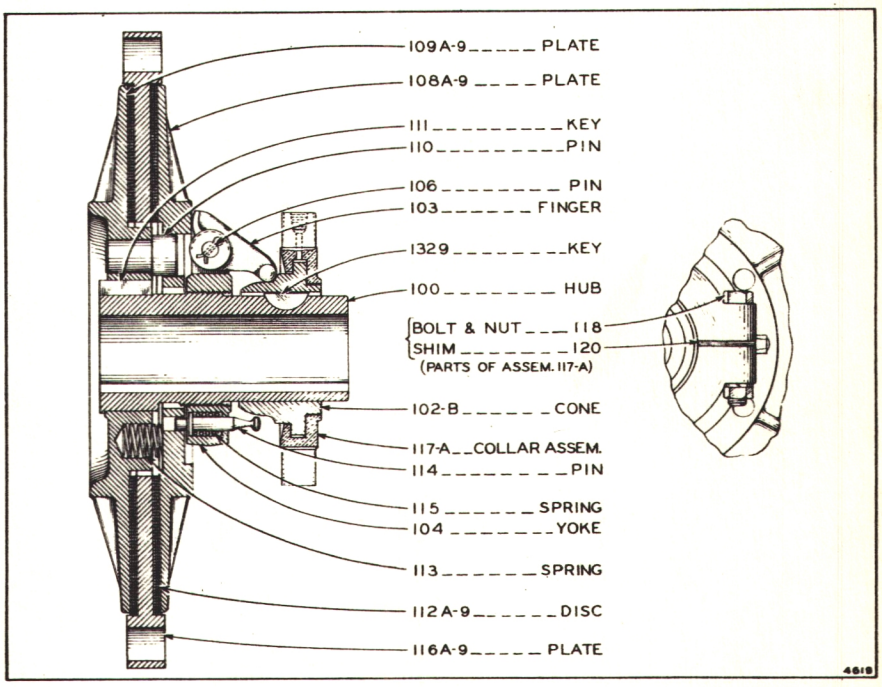


CATERPILLAR NO. 166109

Numbers Shown Are Manufacturers, Not Caterpillar" Part Numbers, Except When Specified.

Form - 1736 Printed in U.S.A.

# TWIN DISC CLUTCH TYPE B-1-9

Manufacturer
TWIN DISC CLUTCH CO.
Racine, Wisconsin

For Parts Service on this Clutch Order from the Caterpillar Tractor Co., Peoria, Ill.

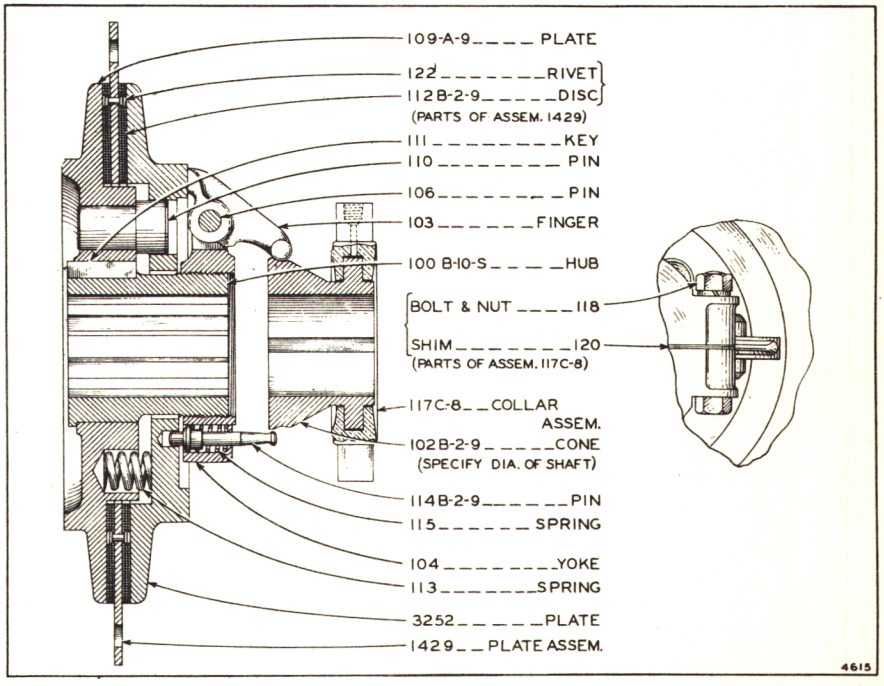


CATERPILLAR NO. 171185

Numbers Shown Are Manufacturers, Not "Caterpillar" Part Numbers, Except When Specified.

Form - 1736 Printed in U.S.A.

# TWIN DISC CLUTCH TYPE C-1-9

Manufacturer
TWIN DISC CLUTCH CO.
Racine, Wisconsin

For Parts Service on this Clutch Order from the Caterpillar Tractor Co., Peoria, Ill.

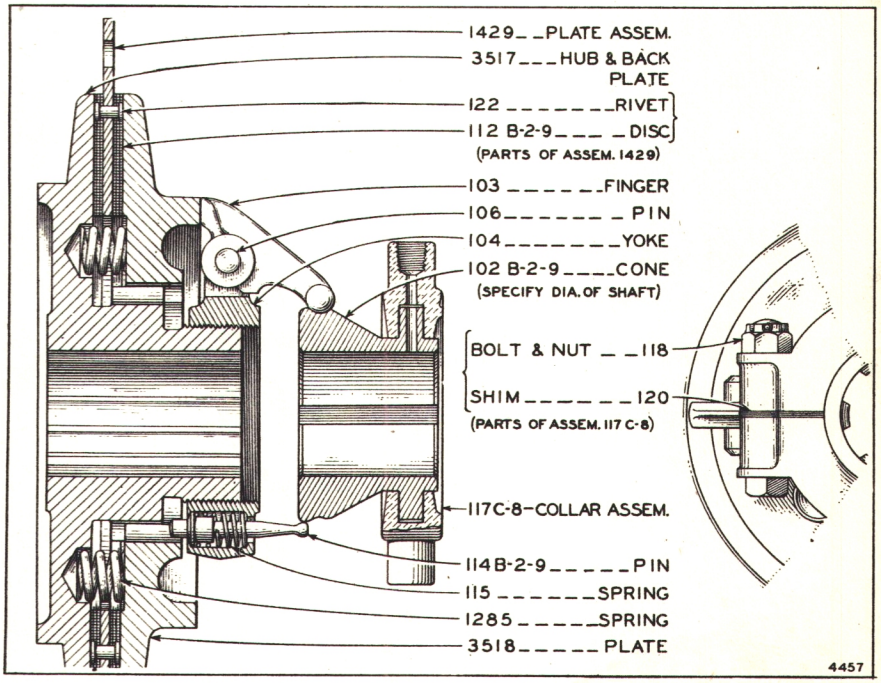


CATERPILLAR NO. AM-3681

Numbers Shown Are Manufacturers, Not Caterpillar" Part Numbers, Except When Specified.

Form - 1736 Printed in U.S.A.

Remove Issue 1 and insert this in its place

Form 1736 Printed in U.S.A. Issue 2 1-1-36

# FUEL PUMP
# STEWART-WARNER MODEL 807-A
# or A C COMPANY No. 1522204

**Manufacturer**
**A C SPARK PLUG COMPANY**
**Flint, Michigan**

**For Parts Service on this Fuel Pump order from the United Motor Service Corp. or their Representative**

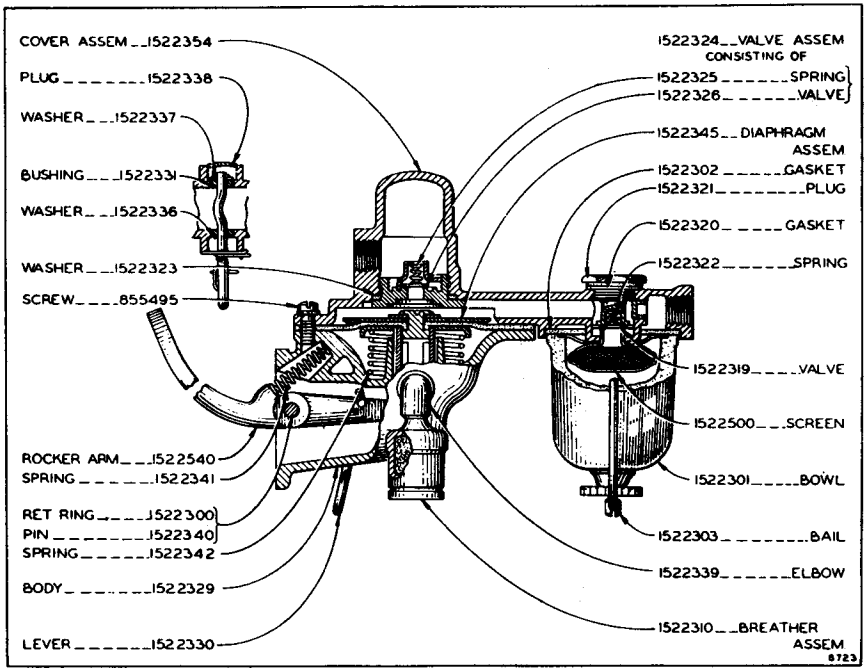


## CATERPILLAR NO. 1B5260

## (FIRST TYPE)

SEE BACK OF PAGE FOR SECOND TYPE

NUMBERS SHOWN ARE MANUFACTURERS, NOT "CATERPILLAR" PART NUMBERS, EXCEPT WHEN SPECIFIED.

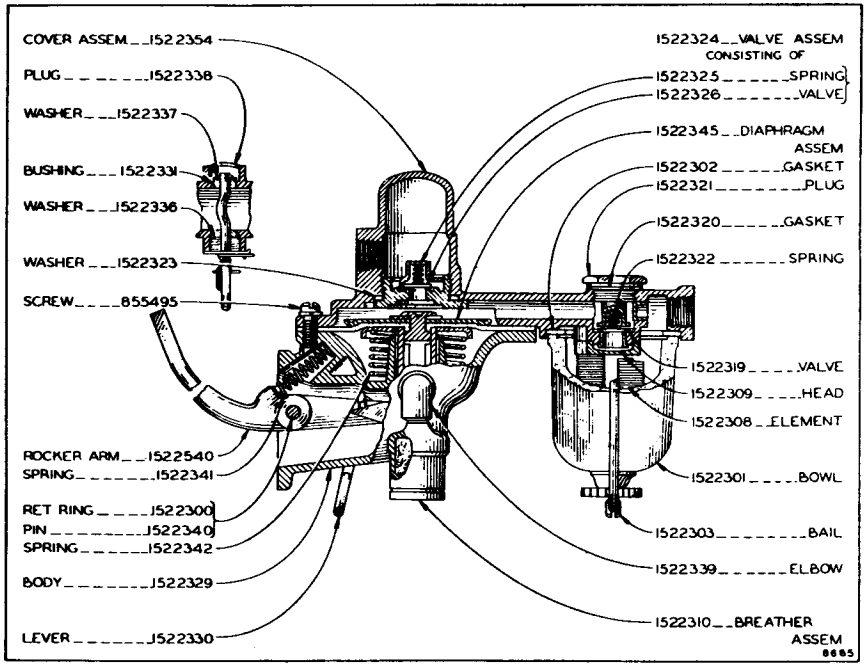


CATERPILLAR NO. 1B5260

(SECOND TYPE)

NUMBERS SHOWN ARE MANUFACTURERS, NOT "CATERPILLAR" PART NUMBERS, EXCEPT WHEN SPECIFIED.

Remove issue 1 and insert this in its place.

Form 1736 Printed in U.S.A. Issue 2 12-1-35

# FUEL PUMP
# STEWART-WARNER MODEL 407-AM
# or AC COMPANY No. 1522731

Manufacturer
A C SPARK PLUG COMPANY
Flint, Michigan

For Parts Service on this Fuel Pump order from the United Motor Service Corp. or their Representative

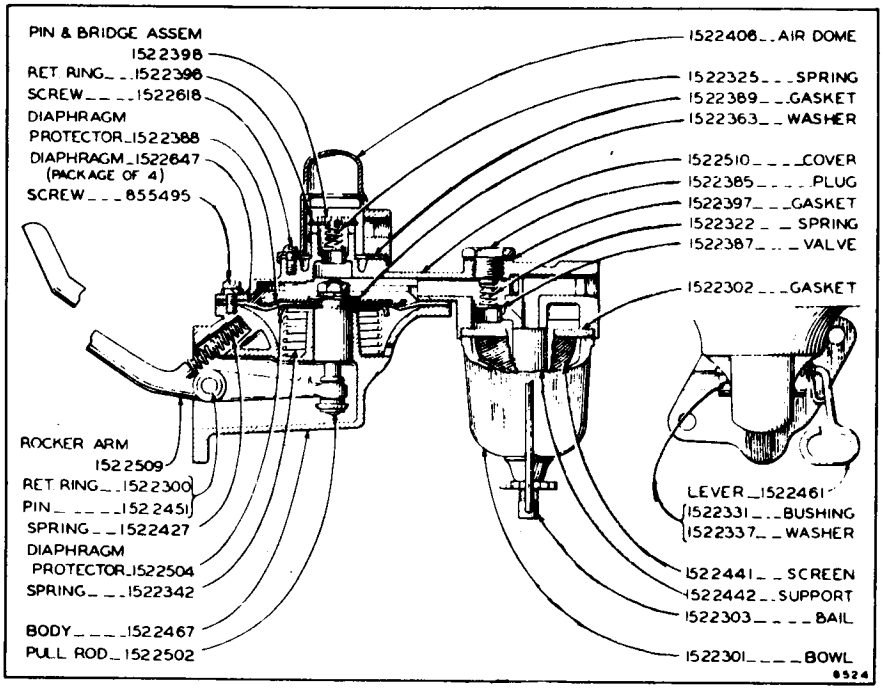


CATERPILLAR NO. 1A8300

NUMBERS SHOWN ARE MANUFACTURERS, NOT "CATERPILLAR" PART NUMBERS, EXCEPT WHEN SPECIFIED.

# GUIDE HEAD LAMP No. 752 AND 753-B

Manufacturer
GUIDE LAMP CORPORATION
Anderson, Indiana

For Parts Service on this Lamp Order from the United Motor Service Corporation or their Representative

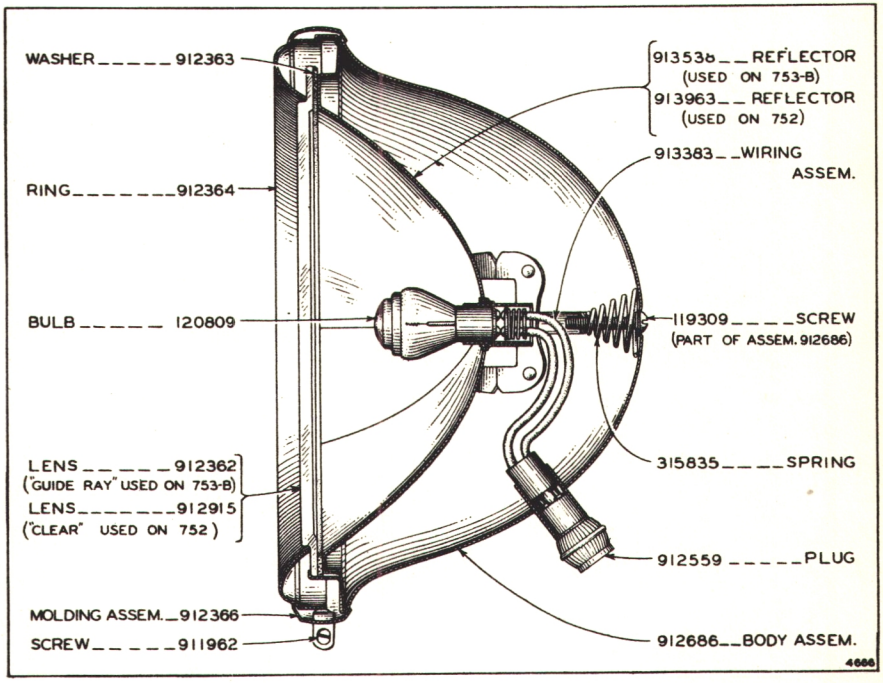


CATERPILLAR NO. 19559 or 3548-A

Note: Caterpillar No. 3548-A (Guide Lamp No. 753-B) Entirely Replaces Caterpillar No. 19559 (Guide Lamp No. 752)

Numbers Shown Are Manufacturers, Not Caterpillar" Part Numbers, Except When Specified.

# ALEMITE LARGE CRANK HANDLE COMPRESSOR No. L C-800

Manufacturer
ALEMITE CORPORATION
2650 North Crawford Ave.
Chicago, Ill.

For Parts Service on this Compressor Order from the Manufacturer or his Representative

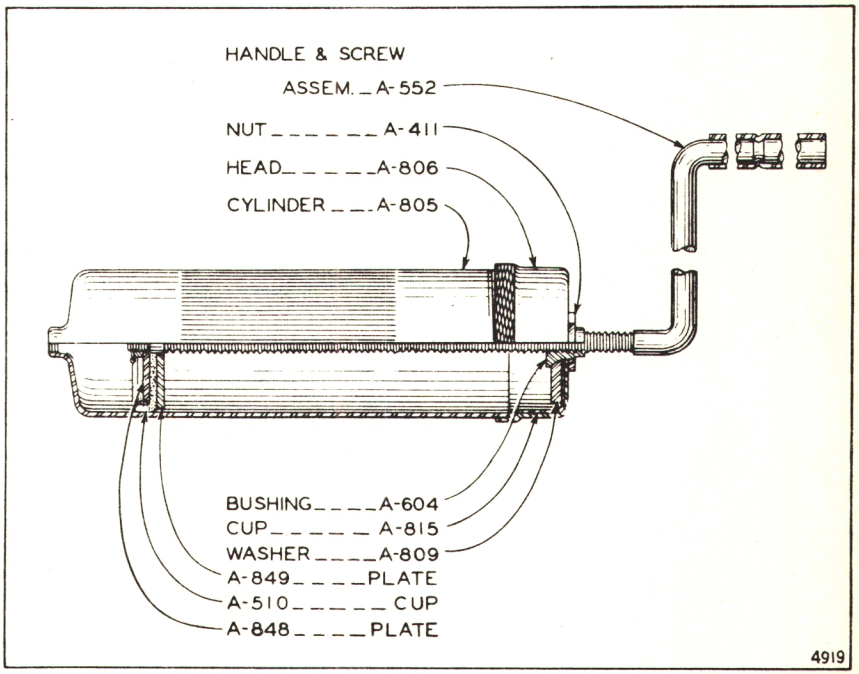


ALEMITE - LC-800

Numbers Shown Are Manufacturers, Not "Caterpillar" Part Numbers, Except When Specified.

Form - 1736 Printed in U.S.A.

# SCHWITZER-CUMMINS FAN ASSEM.
## No. OB-13129

Manufacturer·
SCHWITZER CUMMINS CO.
Mass. Ave. at Fan Str.
Indianapolis, Indiana

For Parts Service on this Fan Order from the Caterpillar Tractor Co., Peoria, Illinois

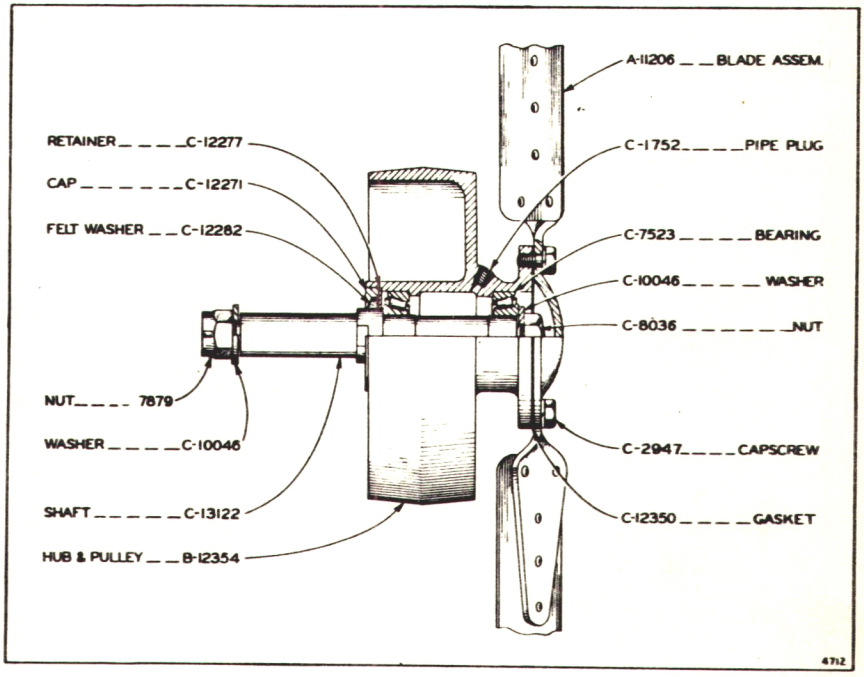


CATERPILLAR NO. 168314

Numbers Shown Are Manufacturers, Not "Caterpillar" Part Numbers, Except When Specified.

# SCHWITZER-CUMMINS FAN ASSEM.
## No. A-10462A

Manufacturer
SCHWITZER CUMMINS CO.
Mass. Ave. at Fan Str.
Indianapolis, Indiana

For Parts Service on this Fan Order from the Caterpillar Tractor Co., Peoria, Illinois

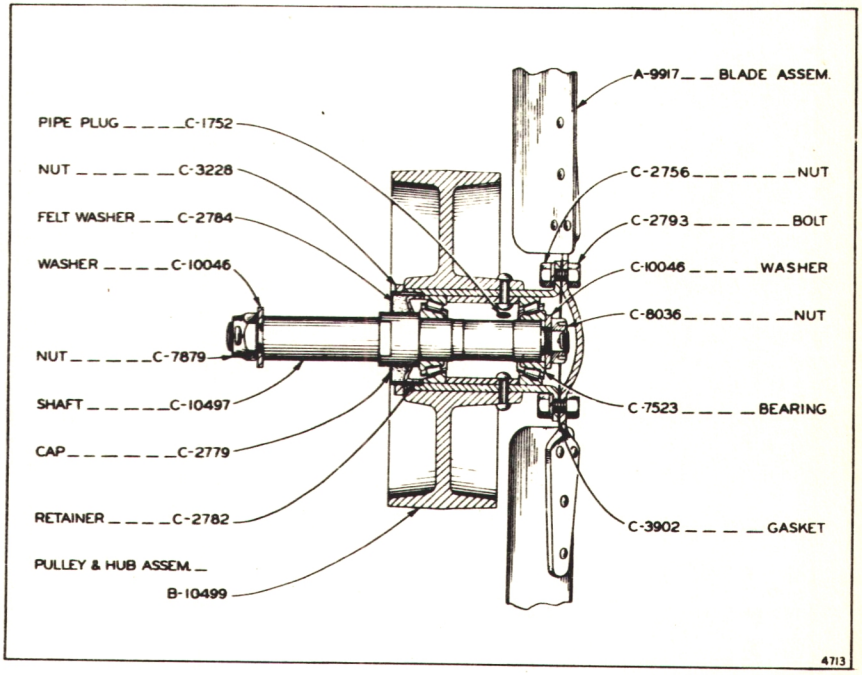


CATERPILLAR NO. 168314

Numbers Shown Are Manufacturers, Not "Caterpillar" Part Numbers, Except When Specified.

Form - 1736 Printed in U.S.A.

# SCHWITZER-CUMMINS FAN ASSEM.
## No. OB-3701A

Manufacturer
SCHWITZER CUMMINS CO.
Mass. Ave. at Fan Str.
Indianapolis, Indiana

For Parts Service on this Fan Order from the Caterpillar Tractor Co., Peoria, Illinois

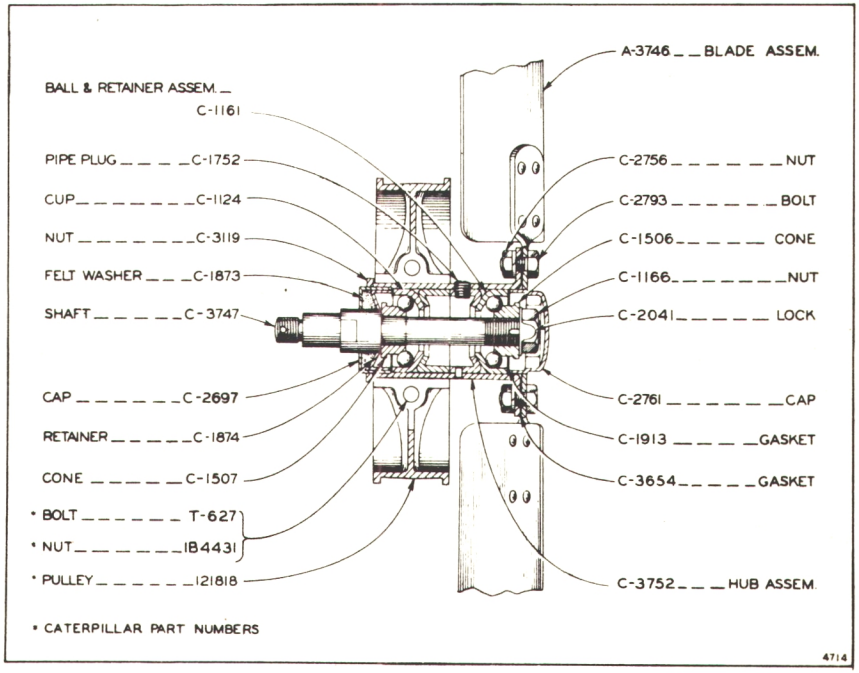


CATERPILLAR NO. 166149

Numbers Shown Are Manufacturers, Not "Caterpillar" Part Numbers, Except When Specified.

Form - 1736 Printed in U.S.A.

# SCHWITZER-CUMMINS FAN ASSEM.
## No. OB-6980

Manufacturer
SCHWITZER CUMMINS CO.
Mass. Ave. at Fan Str.
Indianapolis, Indiana

For Parts Service on this Fan Order from the Caterpillar Tractor Co., Peoria, Illinois

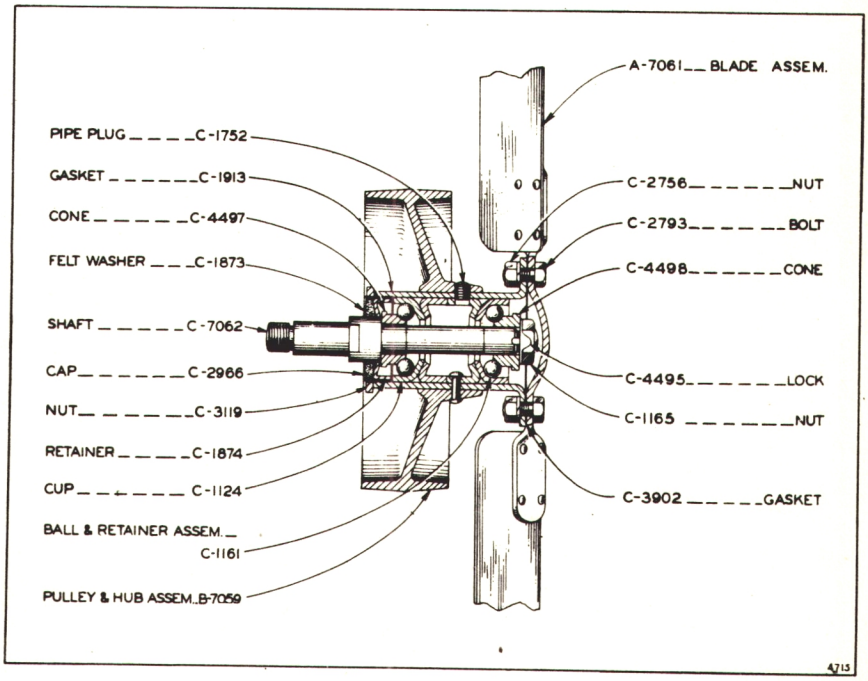


CATERPILLAR NO. 165938

Numbers Shown Are Manufacturers, Not "Caterpillar" Part Numbers, Except When Specified.

# SCHWITZER-CUMMINS FAN ASSEM.
## No. OB-8032

Manufacturer
SCHWITZER CUMMINS CO.
Mass. Ave. at Fan Str.
Indianapolis, Indiana

For Parts Service on this Fan Order from the Caterpillar Tractor Co., Peoria, Illinois

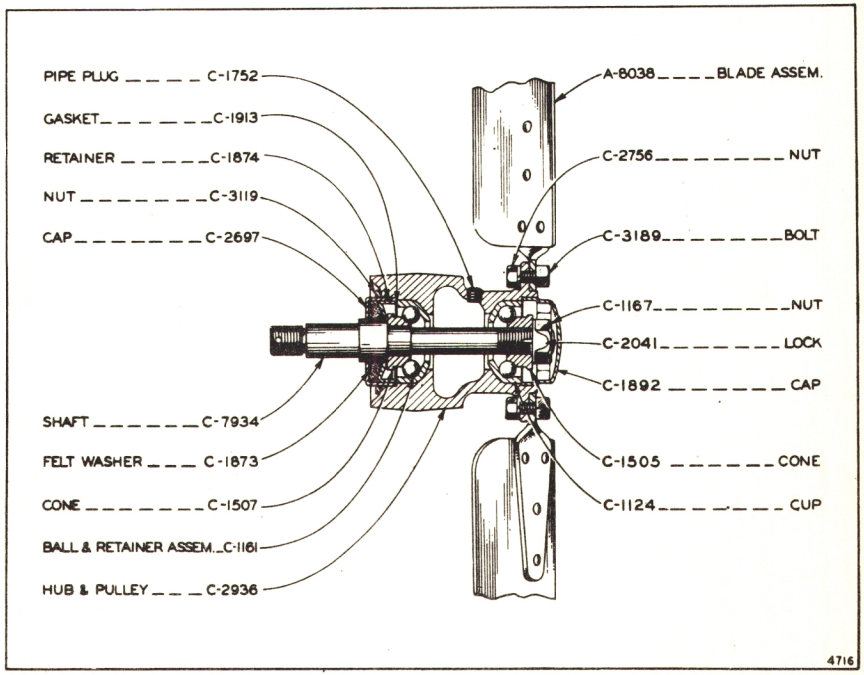


CATERPILLAR NO. 167720

Numbers Shown Are Manufacturers, Not "Caterpillar" Part Numbers, Except When Specified.

# SCHWITZER-CUMMINS FAN ASSEM.
## No. OB-9180

Manufacturer
SCHWITZER CUMMINS CO.
Mass. Ave. at Fan Str.
Indianapolis, Indiana

For Parts Service on this Fan Order from the Caterpillar Tractor Co., Peoria, Illinois

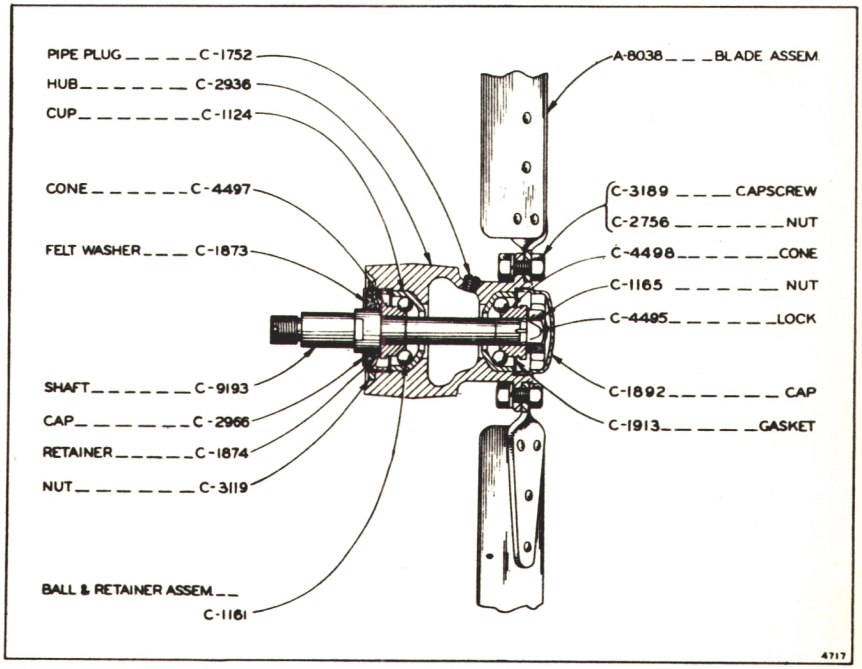


CATERPILLAR NO. 167720

Numbers Shown Are Manufacturers, Not "Caterpillar" Part Numbers, Except When Specified.

# SCHWITZER-CUMMINS FAN ASSEM.
## No. OB-7925

Manufacturer
SCHWITZER CUMMINS CO.
Mass. Ave. at Fan Str.
Indianapolis, Indiana

For Parts Service on this Fan Order from the Caterpillar Tractor Co., Peoria, Illinois

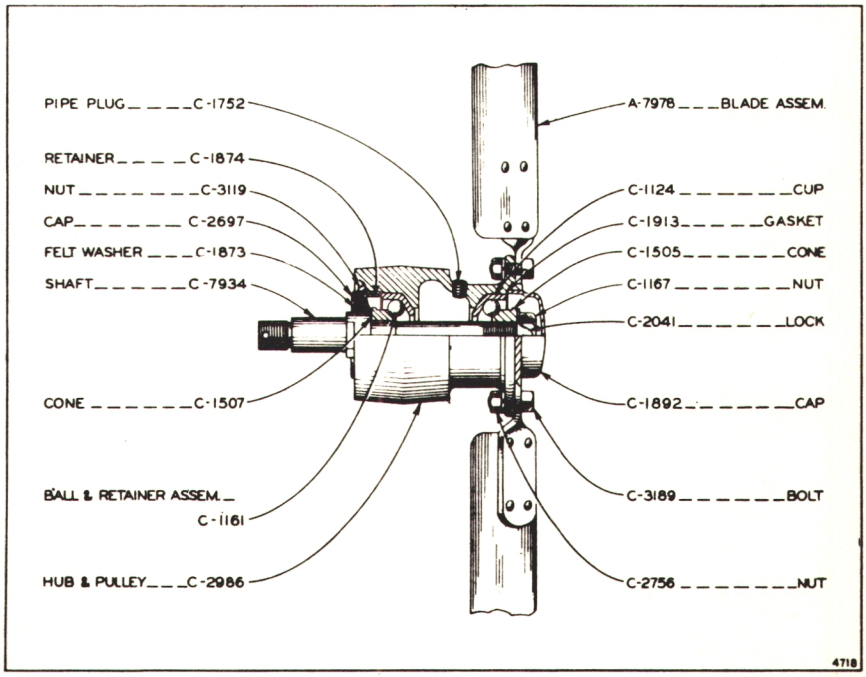


CATERPILLAR NO. 167720

Numbers Shown Are Manufacturers, Not "Caterpillar" Part Numbers, Except When Specified.

Form - 1736 Printed in U.S.A.

# SCHWITZER-CUMMINS FAN ASSEM'S. No. B-9400 AND B-16824

Manufacturer
SCHWITZER CUMMINS CO.
Mass. Ave. at Fan Str.
Indianapolis, Indiana

For Parts Service on this Fan Order from the Caterpillar Tractor Co., Peoria, Illinois

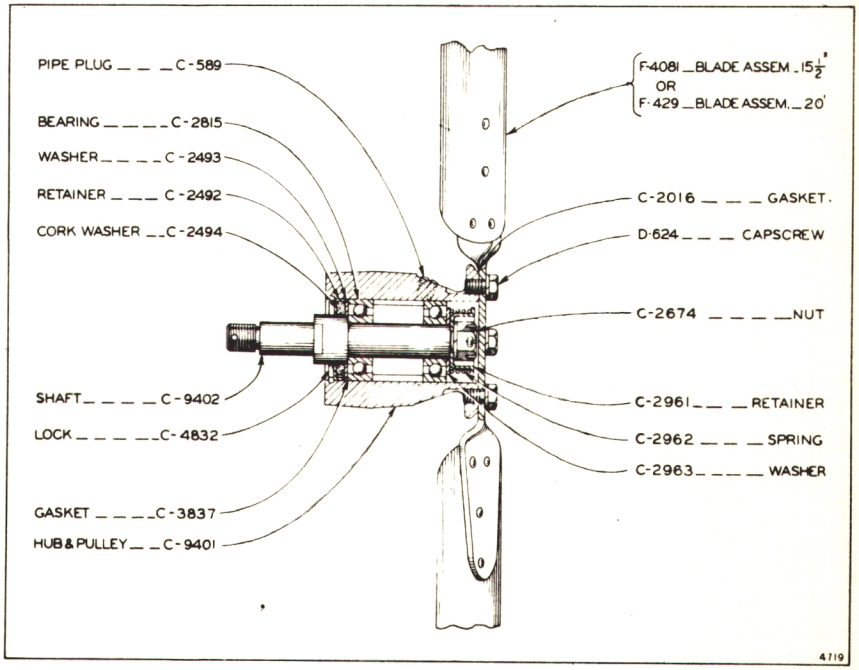


CATERPILLAR NO. 167720

Numbers Shown Are Manufacturers, Not "Caterpillar" Part Numbers, Except When Specified.

# SCHWITZER-CUMMINS FAN ASSEM.
## No. OA-11165

Manufacturer
SCHWITZER CUMMINS CO.
Mass. Ave. at Fan Str.
Indianapolis, Indiana

For Parts Service on this
Fan Order from the
Caterpillar Tractor Co.,
Peoria, Illinois

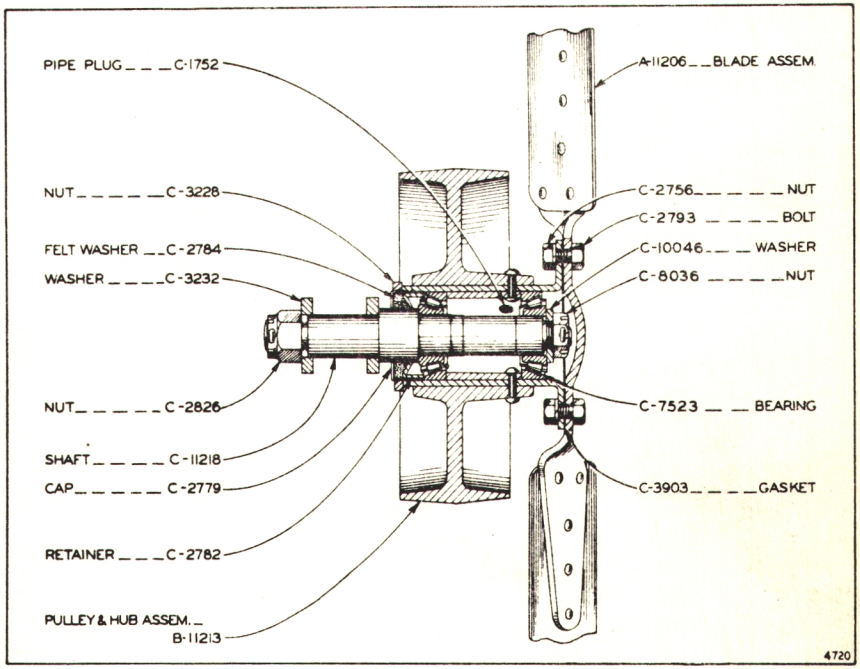


CATERPILLAR NO. 171182 or 172184

Numbers Shown Are Manufacturers, Not "Caterpillar" Part Numbers, Except When Specified.

Form - 1736 Printed in U.S.A.

# SCHWITZER-CUMMINS FAN ASSEM.
## No. OB-12353

Manufacturer
SCHWITZER CUMMINS CO.
Mass. Ave. at Fan Str.
Indianapolis, Indiana

For Parts Service on this Fan Order from the Caterpillar Tractor Co., Peoria, Illinois

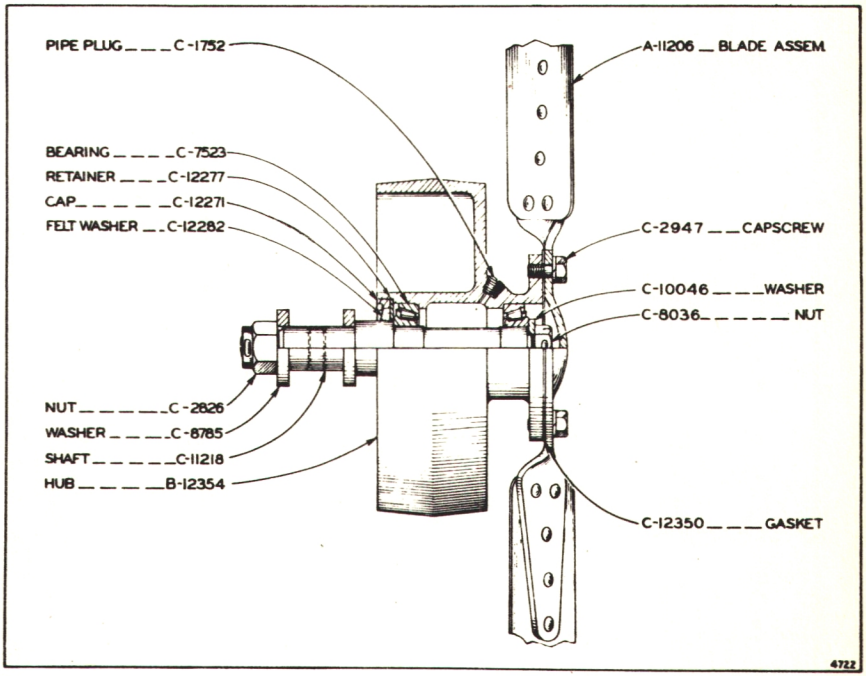


CATERPILLAR NO.171182 or 172184

Note:
Except for the hub, which is $7\frac{3}{4}$ in diameter, this fan is the same as OB-12389 (page 88)

Numbers Shown Are Manufacturers, Not "Caterpillar" Part Numbers, Except When Specified.

# SCHWITZER-CUMMINS FAN ASSEM.
## No. OB-12389

Manufacturer
SCHWITZER CUMMINS CO.
Mass. Ave. at Fan Str.
Indianapolis, Indiana

For Parts Service on this Fan Order from the Caterpillar Tractor Co., Peoria, Illinois

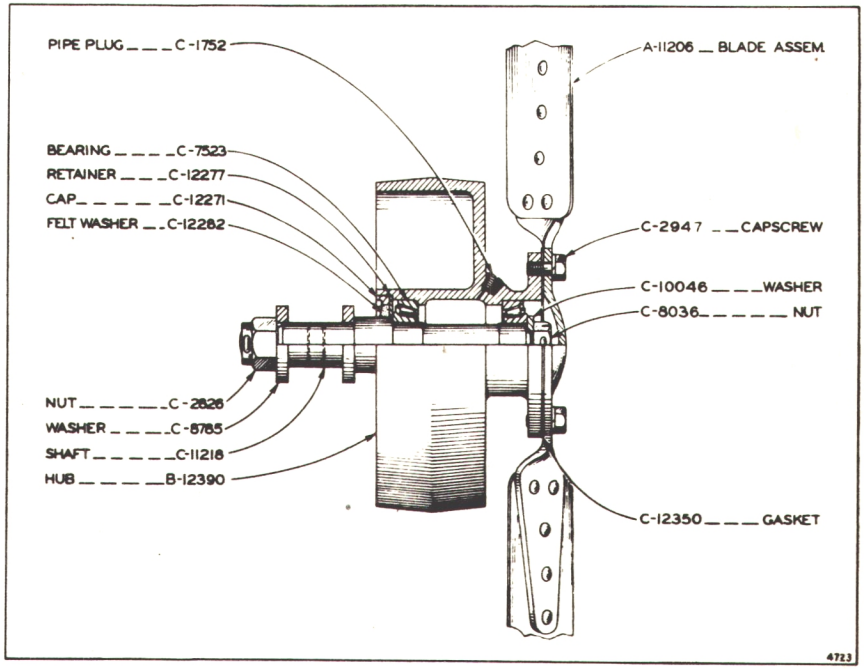


CATERPILLAR NO. AM-3979

Note:
Except for the hub, which is 6" in diameter, this fan is the same as OB-12353 (page 87)

Numbers Shown Are Manufacturers, Not "Caterpillar" Part Numbers, Except When Specified.

Form - 1736 Printed in U.S.A.

# SCHWITZER-CUMMINS FAN ASSEM.
## No. A-6819

Manufacturer
SCHWITZER CUMMINS CO.
Mass. Ave. at Fan Str.
Indianapolis, Indiana

For Parts Service on this Fan Order from the Caterpillar Tractor Co., Peoria, Illinois

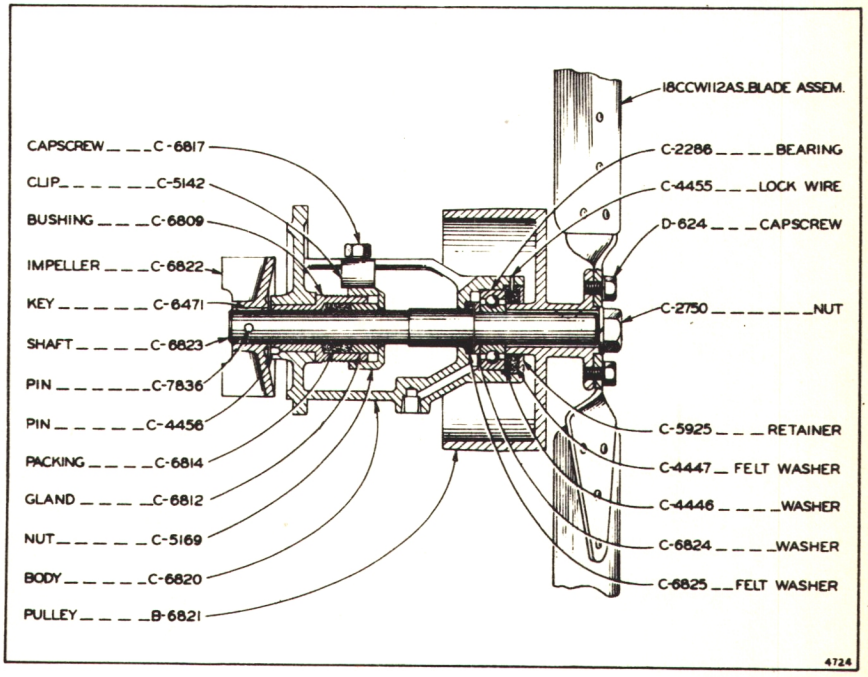


CATERPILLAR NO. AM3492

Numbers Shown Are Manufacturers, Not "Caterpillar" Part Numbers, Except When Specified.

Form - 1736 Printed in U.S.A.

# FORDSON FAN ASSEM. No. S-575

Manufacturer
FORD MOTOR COMPANY
Detroit, Michigan

For Parts Service on this Fan Order from the Manufacturer or his Representative

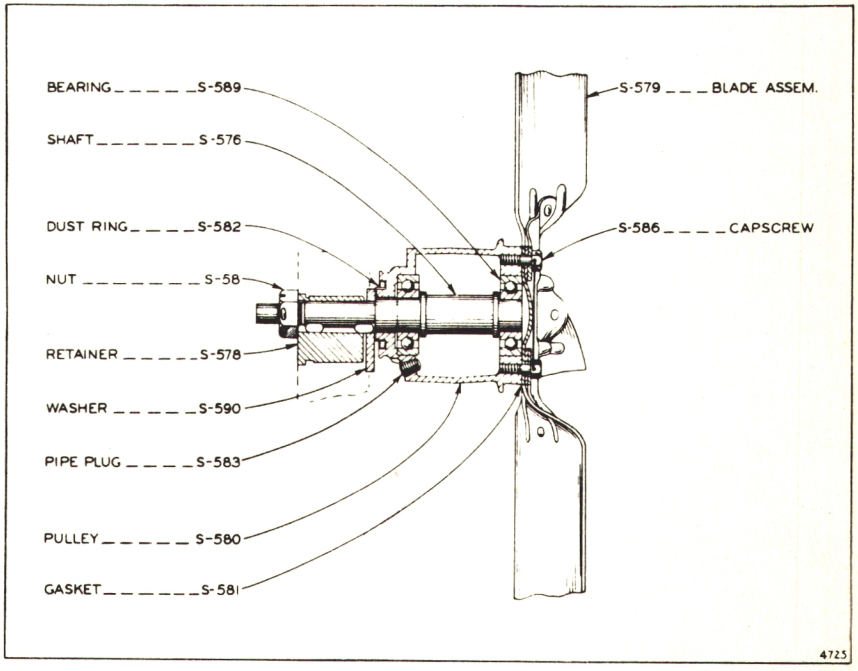


CATERPILLAR NO. AM-5083

Numbers Shown Are Manufacturers, Not "Caterpillar" Part Numbers, Except When Specified.

Form - 1736 Printed in U.S.A.

# BLOOD BROTHERS UNIVERSAL JOINT

Manufacturer
**BLOOD BROTHERS MACHINE CO.**
Allegan, Mich.

For Parts Service on this Universal Joint order from the Caterpillar Tractor Co., Peoria, Ill.

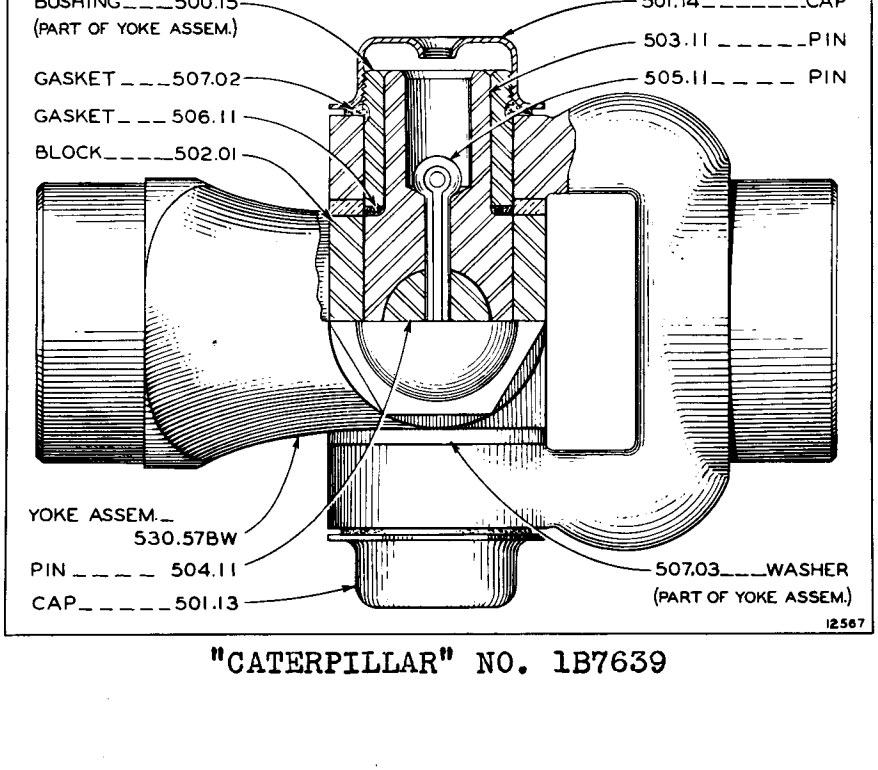


"CATERPILLAR" NO. 1B7639

Numbers Shown are Manufacturers, Not "Caterpillar" Part Numbers, Except When Specified.

REMOVE ISSUE 1 AND INSERT THIS IN ITS PLACE.

Form 1736 Printed in U. S. A. Issue 2 10-1-39

# DO-RAY HEAD LAMPS

Manufacturer
DO-RAY LAMP CO. INC.
1458 South Michigan Ave,
Chicago, Illinois

Por Parts Service on these Lamps Order from the Caterpillar Tractor Co. Peoria, Illinois

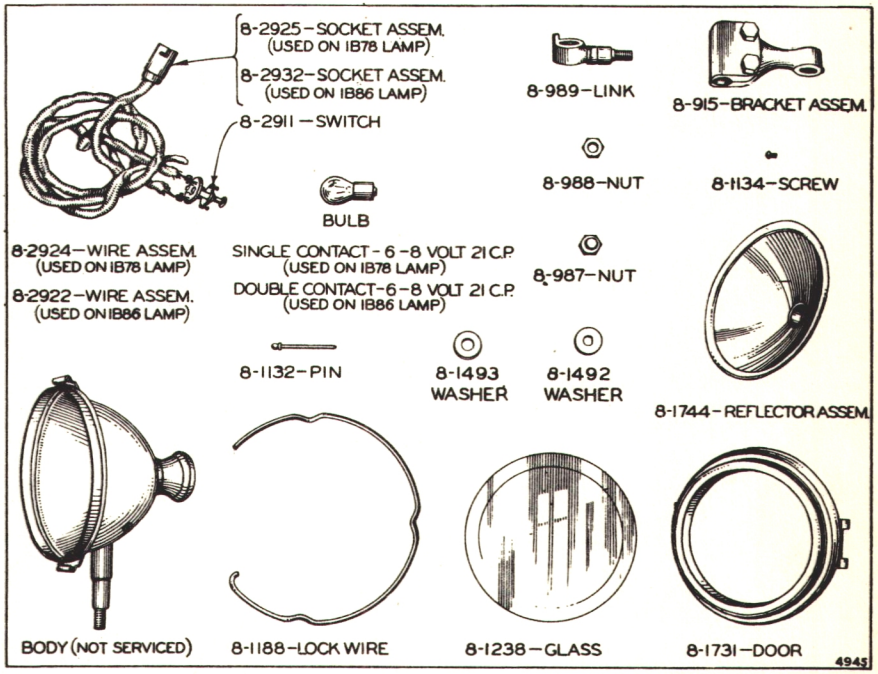


CATERPILLAR NO. 1B78 (Single Contact)

CATERPILLAR NO. 1B86 (Double Contact)

Numbers Shown Are Manufacturers, Not "Caterpillar" Part Numbers, Except When Specified.

# PUROLATOR OIL FILTER No. 12321

Manufacturer
**MOTOR IMPROVEMENT INC.**
365 Frelinghuysen Ave.
Newark, N. J.

For Parts Service on this Purolator Order from the Manufacturer or his Representative

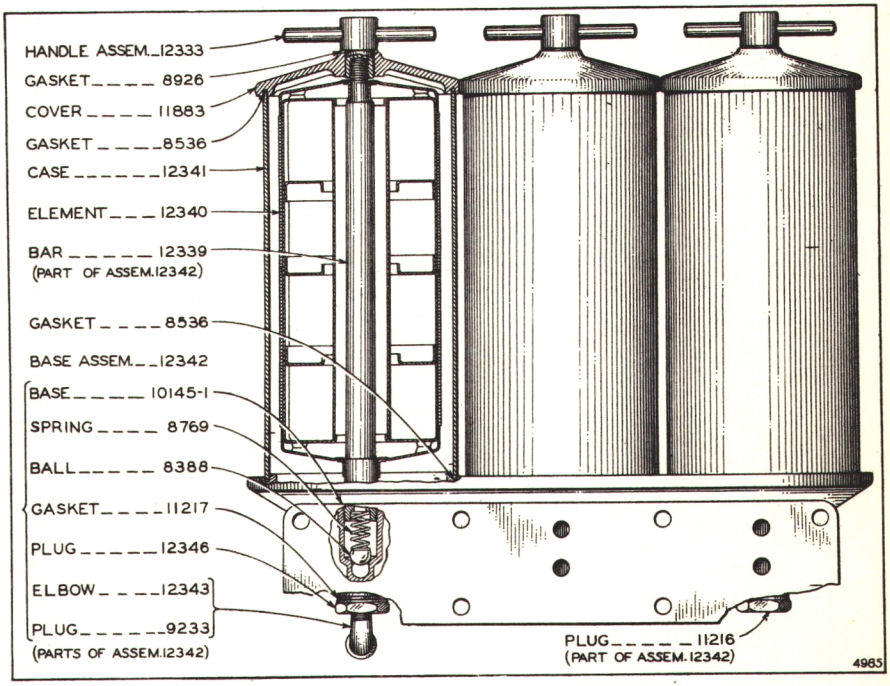


CATERPILLAR NO. 1A1748

Numbers Shown Are Manufacturers, Not "Caterpillar" Part Numbers, Except When Specified.

# TWIN DISC CLUTCH No. 3045 MODEL C-5½

Manufacturer
TWIN DISC CLUTCH CO.
Racine, Wisconsin

For Parts Service on this Clutch Order from the Caterpillar Tractor Co., Peoria, Ill.

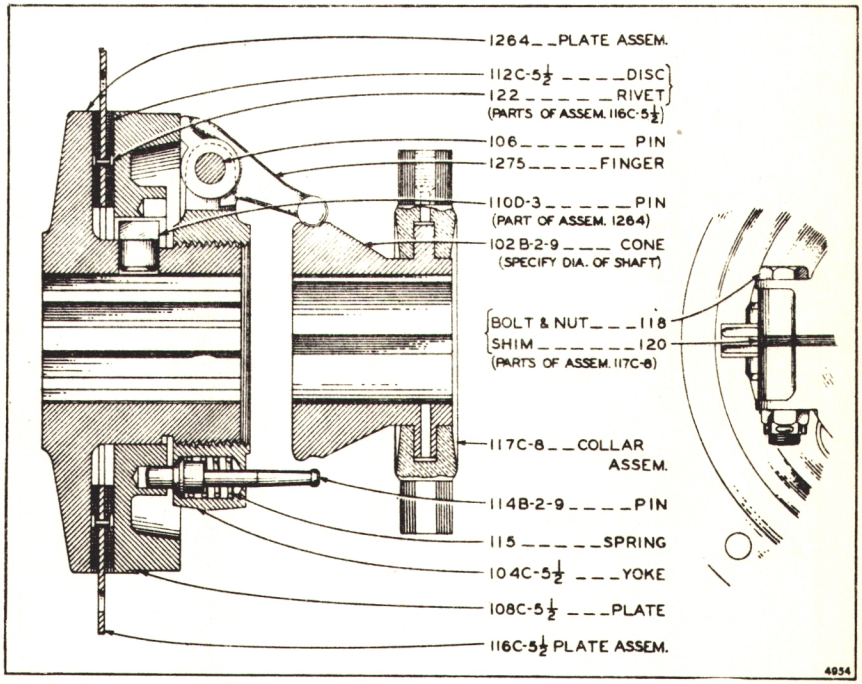


Numbers Shown Are Manufacturers, Not "Caterpillar" Part Numbers.

# GITS—OIL CUPS

Manufacturer
GITS BROS. MANUFACTURING CO.

For Parts Service on These Oil Cups Order From The Caterpillar Tractor Co. Peoria, Ill.

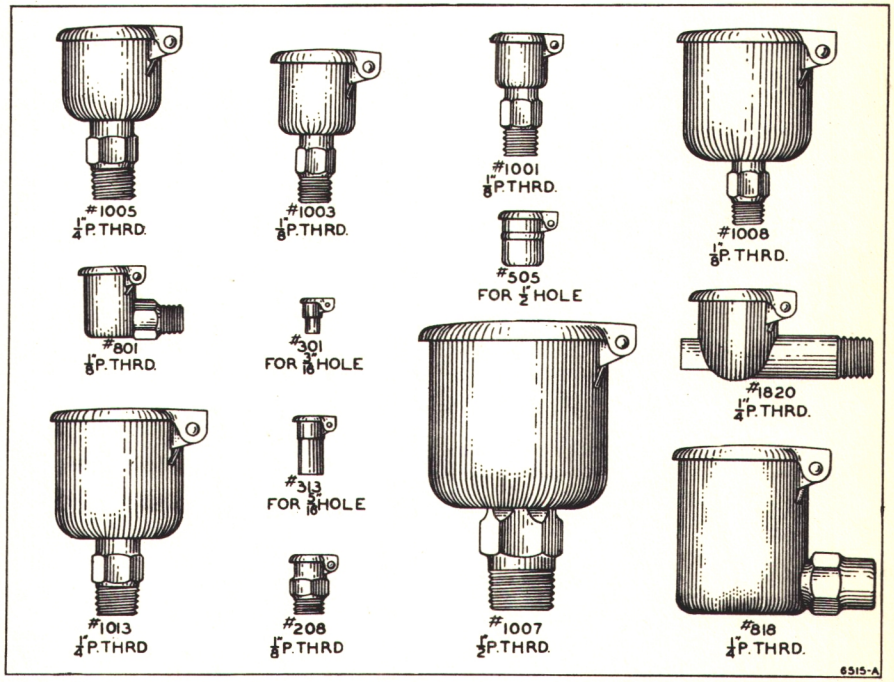


Form 1736 Printed in U. S. A. Issue 1 6-1-34

Numbers Shown Are Manufacturers, Not "Caterpillar" Part Numbers

# VORTOX AIR CLEANER No. 2330-D

Manufacturer
VORTOX MANUFACTURING CO.
Claremont, Calif.

For Parts Service on this Air Cleaner Order from the Caterpillar Tractor Co. Peoria, Ill.

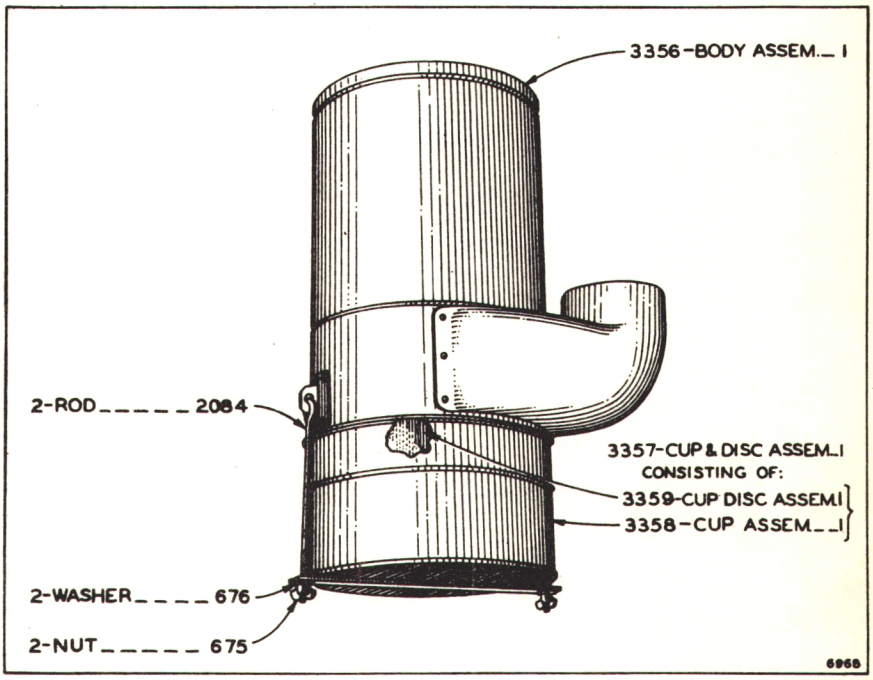


CATERPILLAR NO. 2B4066

Form 1736 Printed in U. S. A. Issue 1 7-1-34

Numbers Shown Are Manufacturers, Not "Caterpillar" Part Numbers, Except When Specified.

# EISEMANN MAGNETO MODEL CT-4

Manufacturer
**EISEMANN MAGNETO CORPORATION**
60 East 42 Street, New York, N. Y.

For Parts Service on this Magneto, Order from the Manufacturer or his Representative

REMOVE ISSUE 1 AND INSERT THIS IN ITS PLACE.

Form 1736 Printed in U. S. A. Issue 2 10-1-40

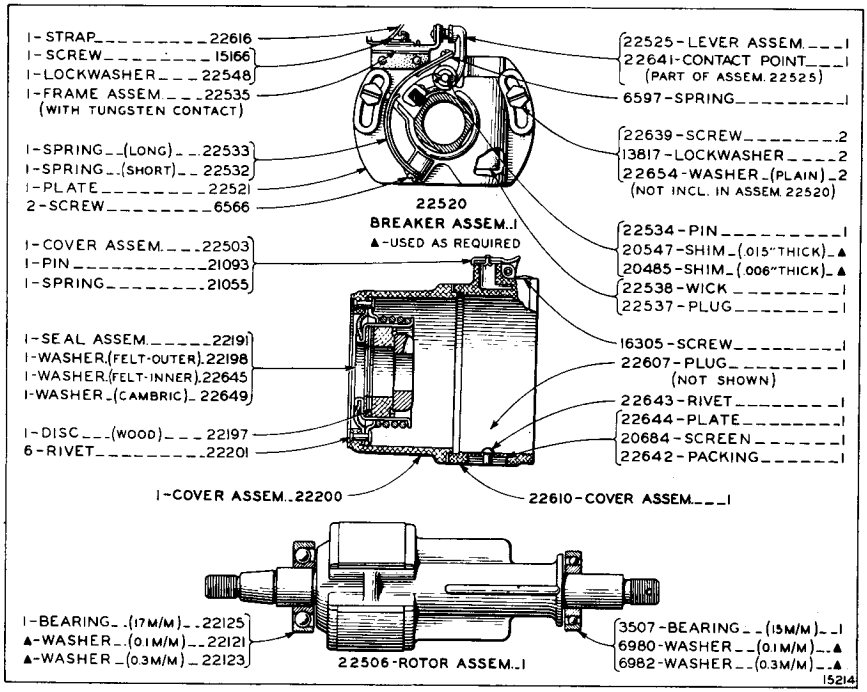


"CATERPILLAR" NO. 2B2238 MAGNETO PARTS

"Caterpillar" No. 2B2238 Magneto
Consists of:
Magneto Parts. . . . . .Shown on this Page
1-22833 Impulse Starter. . . . . Page 108
1-21297 Floating Disc
1-21974 Drive Hub Assembly (Adjustable)

NUMBERS SHOWN ARE MANUFACTURERS, NOT "CATERPILLAR" PART NUMBERS, EXCEPT WHEN SPECIFIED.

"CATERPILLAR" NO. 2B2238 MAGNETO PARTS NUMBERS SHOWN ARE MANUFACTURERS', NOT "CATERPILLAR" PART NUMBERS, EXCEPT WHEN SPECIFIED.

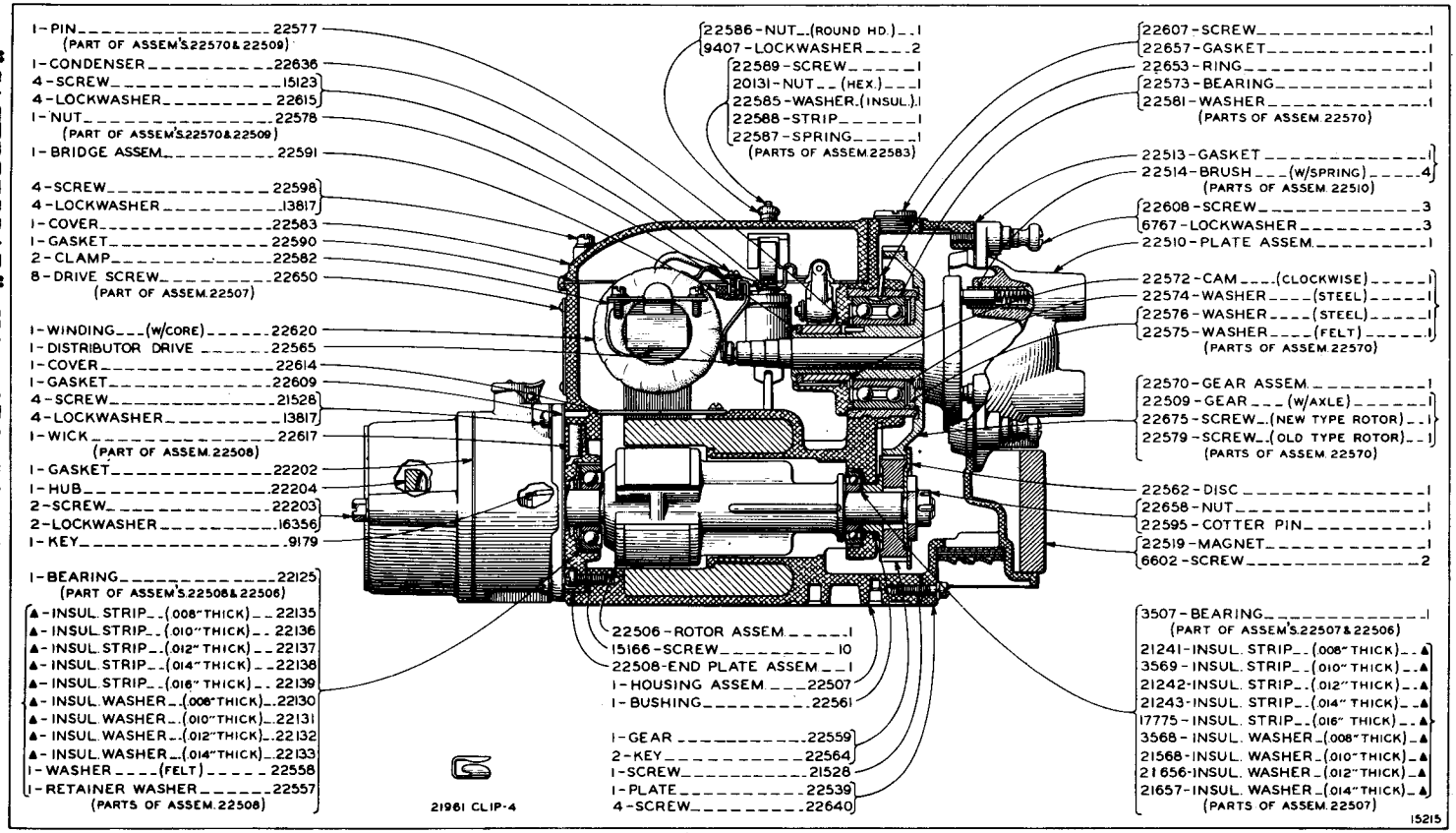

# EISEMANN MAGNETO MODEL C-M4

Manufacturer
EISEMANN MAGNETO CORPORATION
60 East 42 Street, New York, N. Y.

For Parts Service on this Magneto, Order from the Manufacturer or his Representative

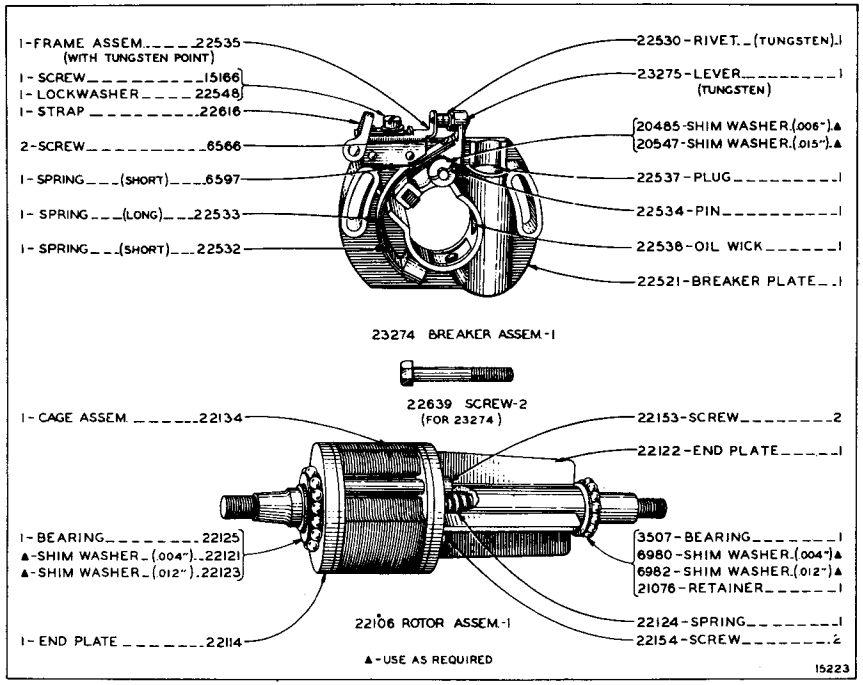


"CATERPILLAR" NO. 6B9092 MAGNETO PARTS

"Caterpillar" No. 6B9092 Magneto
Consists of:

| | | |
|---|---|---|
| Magneto Parts. . . . . | Shown on this Page |
| 1-22406 | Impulse Starter. . . . . | Page 392 |
| 1-21297 | Floating Disc | |
| 1-21974 | Drive Hub Assembly (Adjustable) | |

NUMBERS SHOWN ARE MANUFACTURERS, NOT "CATERPILLAR" PART NUMBERS, EXCEPT WHEN SPECIFIED.

Remove Issue 1 and insert this in its place.

Form 1736 Printed in U.S.A. Issue 2 11-1-40

**"CATERPILLAR" NO. 6B9092 MAGNETO PARTS NUMBERS SHOWN ARE MANUFACTURERS, NOT "CATERPILLAR" PART NUMBERS, EXCEPT WHEN SPECIFIED.**

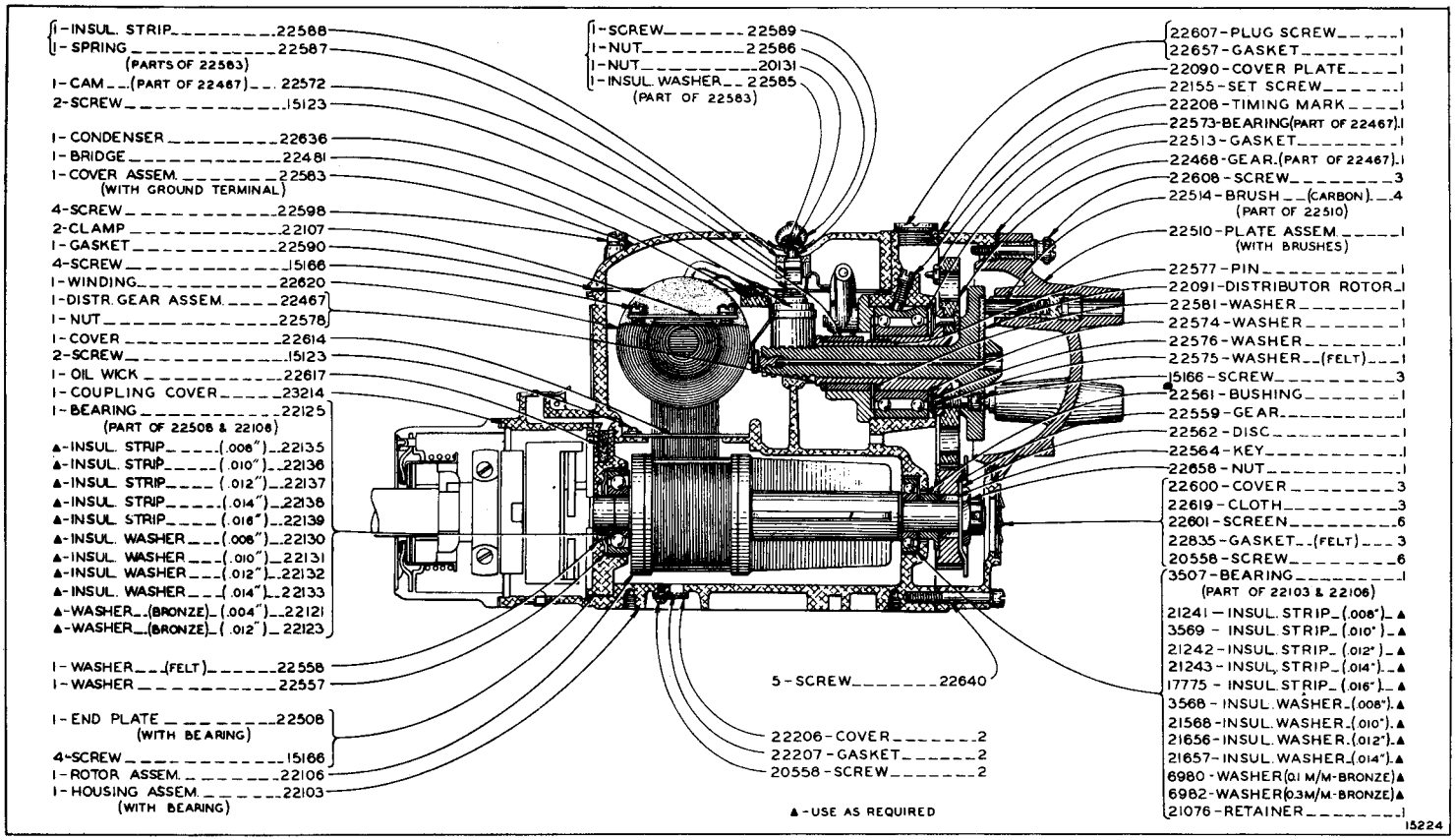

# EISEMANN IMPULSE STARTER No. 22833

Manufacturer
**EISEMANN MAGNETO CORPORATION**
60 East 42 Street, New York, N. Y.

For Parts Service on this Impulse Starter, Order from the Manufacturer or his Representative

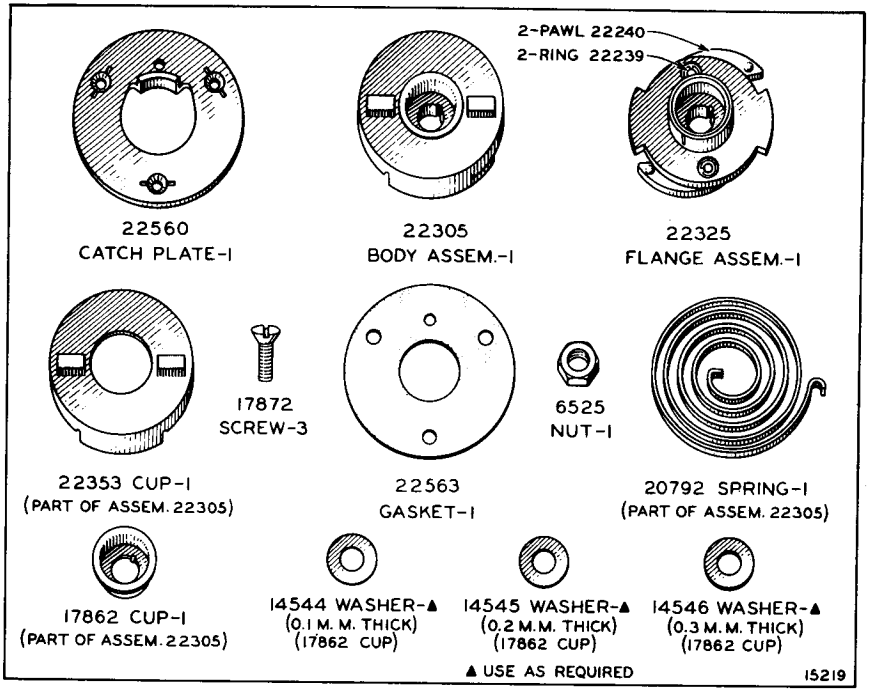


NO. 22833 IMPULSE STARTER

Remove Issue 1 and Insert this in its place.

Form 1736 Printed in U. S. A. Issue 2 10-1-40

NUMBERS SHOWN ARE MANUFACTURERS, NOT "CATERPILLAR" PART NUMBERS, EXCEPT WHEN SPECIFIED.

# EISEMANN IMPULSE STARTER No. 22833

Manufacturer
**EISEMANN MAGNETO CORPORATION**
60 East 42 Street, New York, N. Y.

For Parts Service on this Impulse Starter, Order from the Manufacturer or his Representative

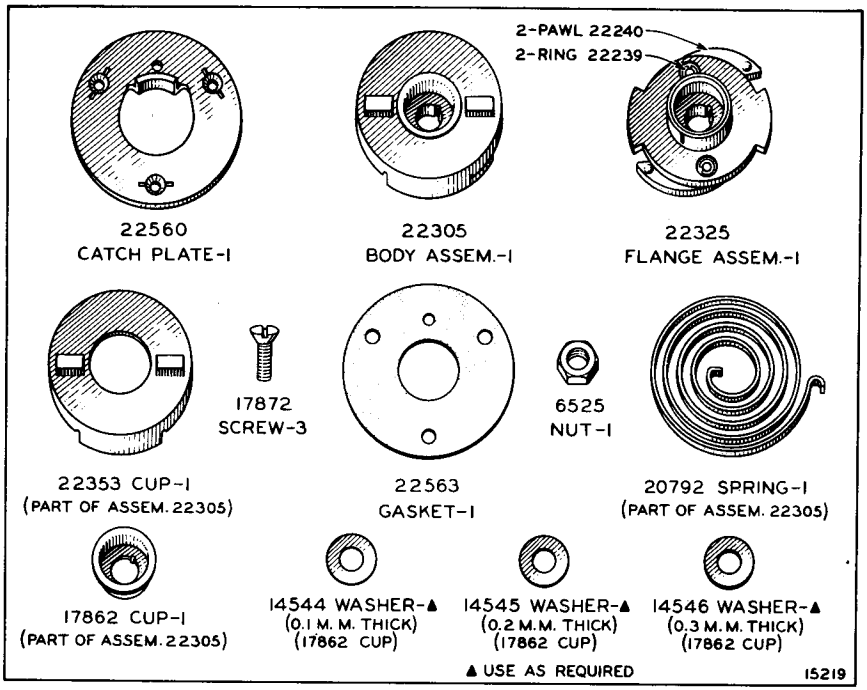


NO. 22833 IMPULSE STARTER

Remove Issue 1 and Insert this in its place.

Form 1736 Printed in U. S. A. Issue 2 10-1-40

NUMBERS SHOWN ARE MANUFACTURERS, NOT "CATERPILLAR" PART NUMBERS, EXCEPT WHEN SPECIFIED.

Remove issue 2 and insert this in its place.

Form 1736 Printed in U.S.A. Issue 3 3-1-36

# DONALDSON AIR CLEANERS

Manufacturer
DONALDSON COMPANY, Inc.
666 Pelham Street
Saint Paul, Minn.

For Parts Service on These Air Cleaners, Order from the Caterpillar Tractor Co., Peoria, Ill.

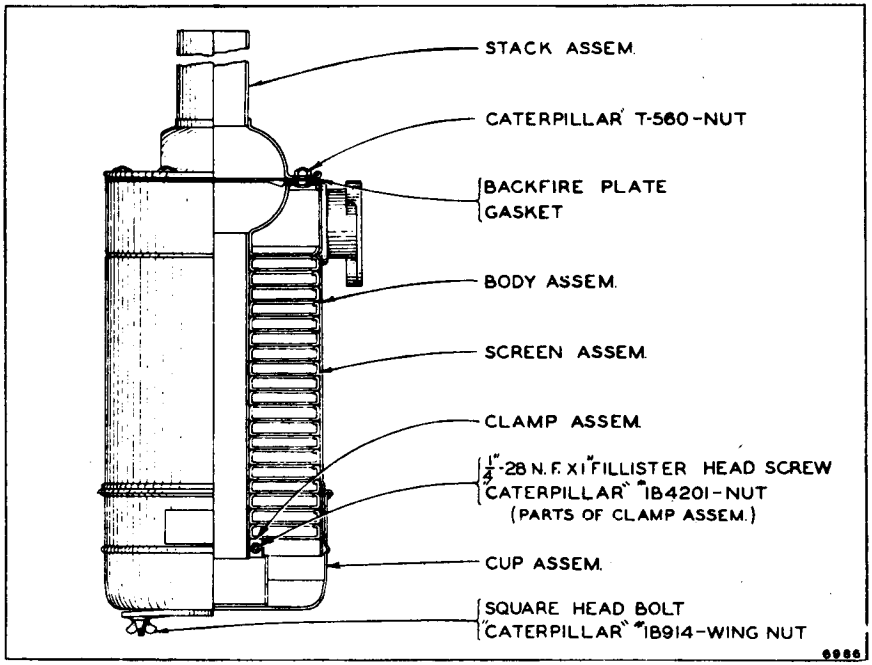


First Type

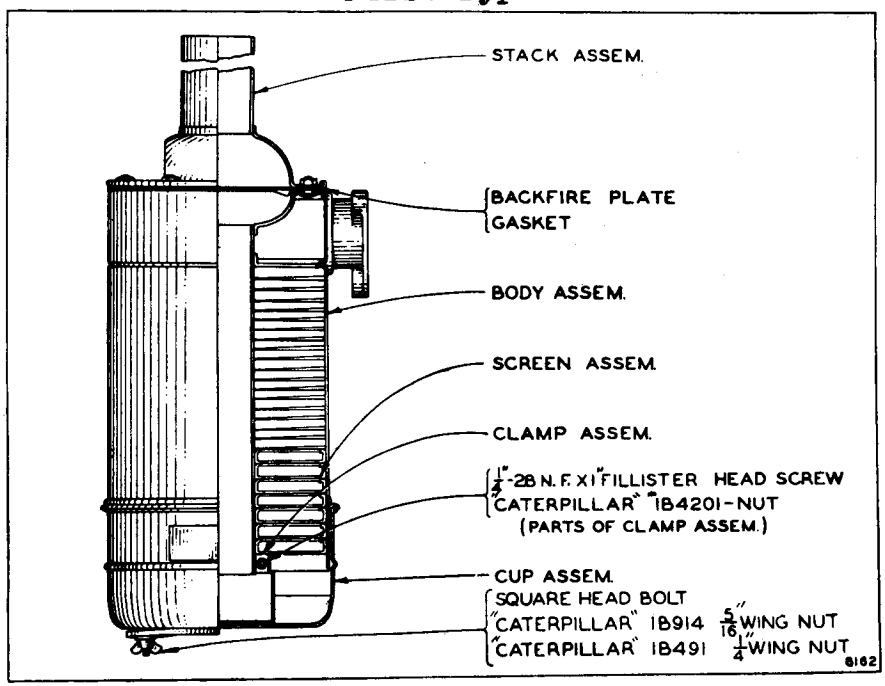


Second Type

NUMBERS SHOWN ARE MANUFACTURERS, NOT "CATERPILLAR" PART NUMBERS, EXCEPT WHEN SPECIFIED.

FIRST TYPE

DONALDSON PART NUMBERS

| "CATERPILLAR" Part No. | Air Cleaner | Stack Assem. | Backfire Plate | Gasket | Body Assem. | Screen Assem. | No. Used | Clamp Assem. | Cup Assem. | Square Head Bolt |
|---|---|---|---|---|---|---|---|---|---|---|
| 2B3939 | 902-A | P-1374 | P-1337 | P-1335 | P-1375 | P-1377 | 19 | P-1339 | P-1376 | 5/16-18 N.C.x6½ |
| 2B3945 | 900-A | P-1366 | P-1337 | P-1335 | P-1367 | P-1377 | 23 | P-1339 | P-1368 | 5/16-18 N.C.x7 |
| 2B4016 | 1001-A | P-1370 | P-1332 | P-1336 | P-1371 | P-1379 | 22 | P-1338 | P-1372 | 5/16-18 N.C.x7 |
| 2B4055 | 1100-A | P-1370 | P-1332 | P-1336 | P-1407 | P-1409 | 23 | P-1402 | P-1408 | 5/16-18 N.C.x7 |
| 2B7691 | A-1102 | P-1370 | P-1332 | P-1336 | P-1407A | P-1409 | 24 | P-1338 | P-1408A | 5/16-18 N.C.x7 |
| 2B7865 | A-1002 | P-1523 | P-1332 | P-1336 | P-1520 | P-1379 | 21 | P-1338 | P-1372 | 5/16-18 N.C.x7 |

SECOND TYPE

DONALDSON PART NUMBERS

| "CATERPILLAR" Part No. | Air Cleaner | Stack Assem. | Backfire Plate | Gasket | Body Assem. | Screen Assem. | No. Used | Clamp Assem. | Cup Assem. | Square Head Bolt |
|---|---|---|---|---|---|---|---|---|---|---|
| 2B3945 | A-907 | P-1366 | P-1337 | P-1335 | P-1367A | P-1377 | 6 | P-1339 | P-1368 | 5/16-18 N.C.x7 |
| 2B4016 | A-1004 | P-1370 | P-1332 | P-1336 | P-1371A | P-1379 | 6 | P-1338 | P-1372 | 5/16-18 N.C.x7 |
| 2B4055 | A-1103 | P-1370 | P-1332 | P-1336 | P-1407B | P-1409 | 6 | P-1338 | P-1408 | 5/16-18 N.C.x7 |
| 2B7691 | A-1103 | P-1370 | P-1332 | P-1336 | P-1407B | P-1409 | 6 | P-1338 | P-1408 | 5/16-18 N.C.x7 |
| 2B7865 | A-1005 | P-1523 | P-1332 | P-1336 | P-1520A | P-1379 | 6 | P-1338 | P-1372 | 5/16-18 N.C.x7 |
| 2B8971 | A-661 | P-1592 | P-1412 | P-1528 | P-1596 | P-1602 | 6 | P-1587 | P-1595 | 1/4-20 N.C.x5 |
| 2B9802 | A-756 | P-1605 | P-1472 | P-1555 | P-1618 | P-1613 | 6 | P-1614 | P-1617A | 1/4-20 N.C.x5½ |
| 3B188 | A-665 | P-1592 | P-1412 | P-1528 | P-1681 | P-1602 | 6 | P-1587 | P-1595 | 1/4-20 N.C.x5 |
| 3B409 | A-906 | P-1374 | P-1337 | P-1335 | P-1375A | P-1377 | 6 | P-1339 | P-1376 | 5/16-18 N.C.x6½ |
| 3B942 | A-755 | P-1685 | P-1472 | P-1555 | P-1689 | P-1613 | 6 | P-1614 | P-1617 | 1/4-20 N.C.x5½ |
| 3B3265 | A-760 | P-1701 | P-1708 | P-1555 | P-1702 | P-1613 | 6 | P-1614 | P-1617B | 1/4-20 N.C.x5½ |

# DONALDSON AIR CLEANER INLET SCREENS

Manufacturer
DONALDSON COMPANY, Inc.
666 Pelham Street
Saint Paul, Minn.

For Parts Service on These Air Cleaner Inlet Screens Order from the Caterpillar Tractor Co., Peoria, Ill.

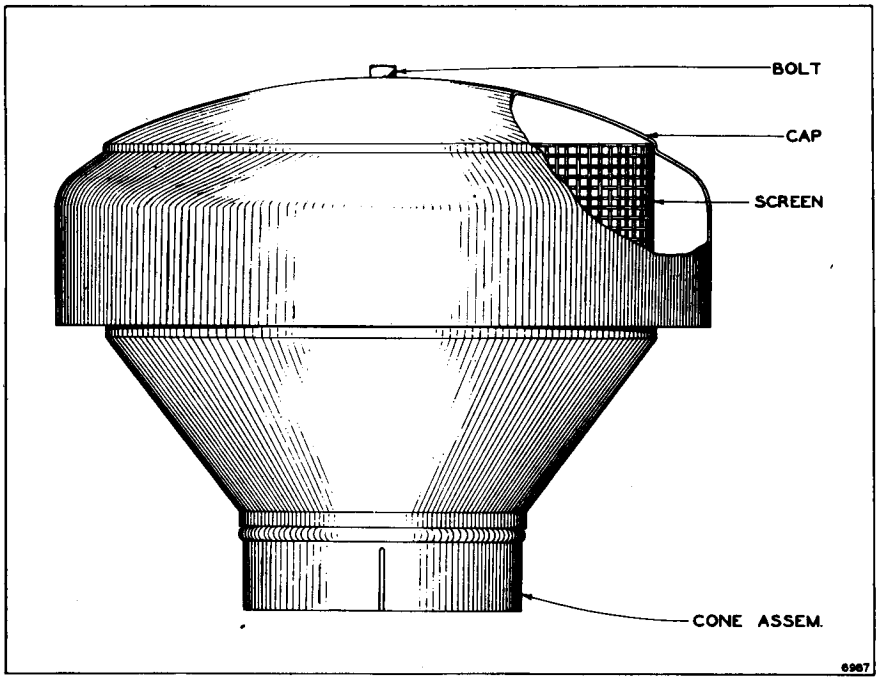


| Air Cleaner Inlet Screen Assembly "Caterpillar" No. | Donaldson No. | Cap Donaldson No. | Screen Donaldson No. | Bolt | Cone Assembly Donaldson No. |
|---|---|---|---|---|---|
| 2B3940 | X-1369 | P-1317 | P-1391 | ¼-20 N.C.x4½" Sq.Hd. | P-1381 |
| 2B3944 | X-1368 | P-1320 | P-1392 | ¼-20 N.C.x3½" Sq.Hd. | P-1382 |
| 2B4343 | X-1360 | P-1384 | P-1388 | ¼-20 N.C.x3" Rd.Hd.Stove | P-1394 |
| 2B4344 | X-1359 | P-1384 | P-1388 | ¼-20 N.C.x3" Rd.Hd.Stove | P-1385 |

Numbers shown are Manufacturers, not "Caterpillar" part numbers, except when specified.

Form 1736 Printed in U. S. A. Issue 1, 10-1-34

# BOSCH IMPULSE STARTER IC-200, ED4 or ED5

Manufacturer
UNITED AMERICAN BOSCH CORP.
Springfield, Massachusetts

For Parts Serviced on this Impulse Starter Order from the Manufacturer or his Representative

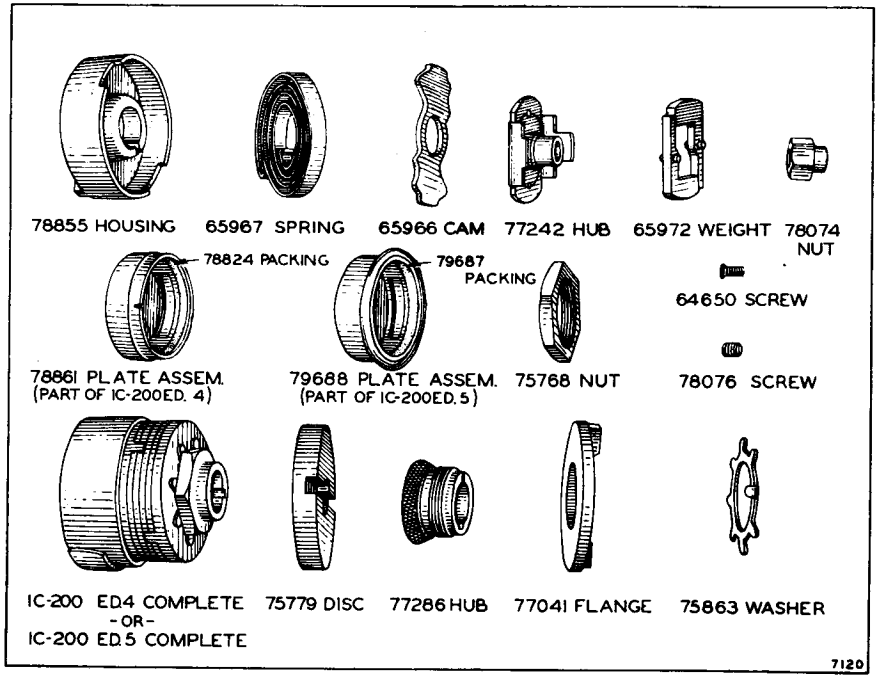


Form 1736 Printed in U.S.A. Issue 1 12-1-34

NUMBERS SHOWN ARE MANUFACTURERS, NOT "CATERPILLAR" PART NUMBERS, EXCEPT WHEN SPECIFIED.

# BOSCH IMPULSE STARTER 1S

Manufacturer
UNITED AMERICAN BOSCH CORPORATION
Springfield, Massachusetts

For Parts Service on this Impulse Starter Order from the Manufacturer or his Representative

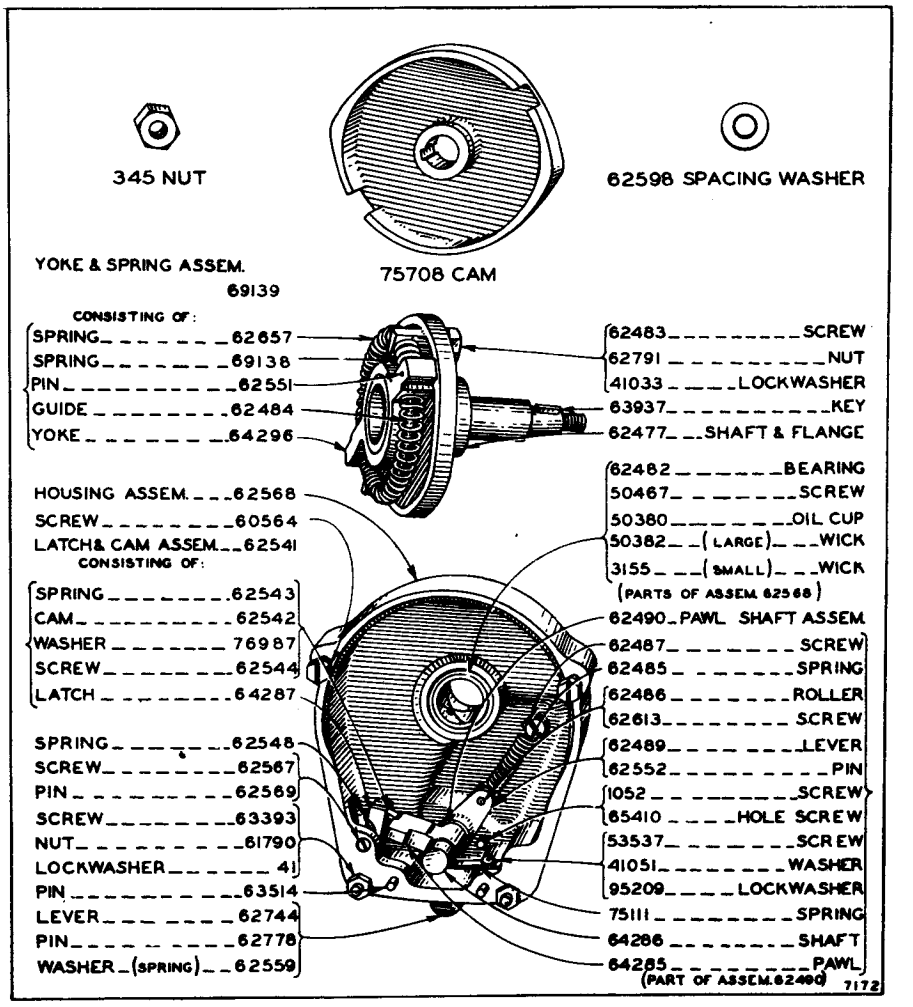


Form 1736 Printed in U.S.A.—Issue 1—1-1-35

Numbers shown are Manufacturers, not "Caterpillar" Part Numbers, except when specified.

# PUROLATOR OIL FILTER No. 12402

Manufacturer
MOTOR IMPROVEMENT, INC.
365 Frelinghuysen Ave.
Newark, N. J.

For Parts Service on this Purolator Order from the Manufacturer or his Representative

Form 1736 Printed in U.S.A. Issue 1 12-1-34

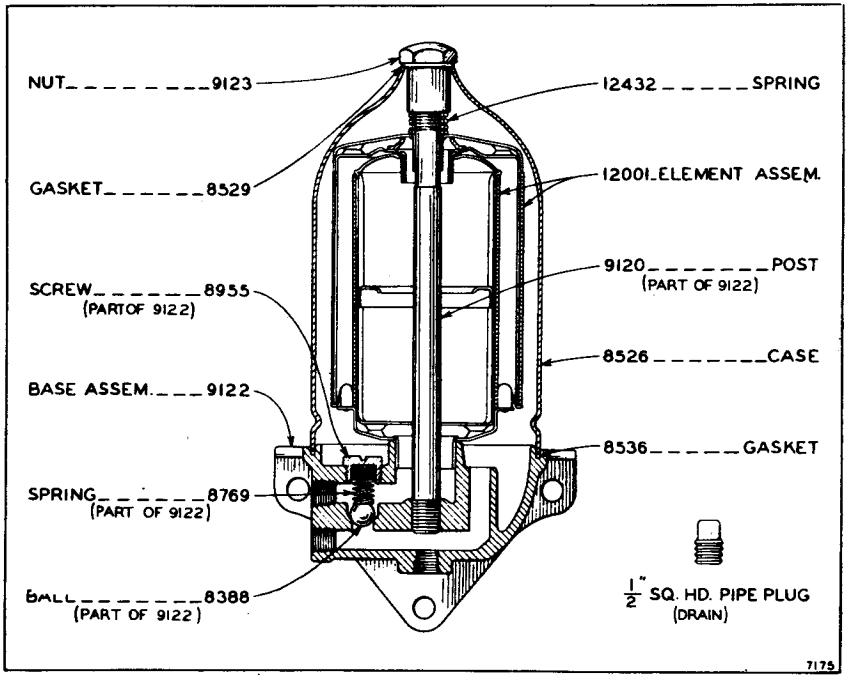


CATERPILLAR NO. 2B4990

NUMBERS SHOWN ARE MANUFACTURERS, NOT "CATERPILLAR" PART NUMBERS, EXCEPT WHEN SPECIFIED.

# ZENITH CARBURETOR—TYPE K5A, 1¼" No. 7074

**Manufacturer**
**ZENITH-DETROIT CORPORATION**
**Foot of Hart Avenue**
**Detroit, Michigan**

**For Parts Service on this Carburetor Order from the Manufacturer or his Representative**

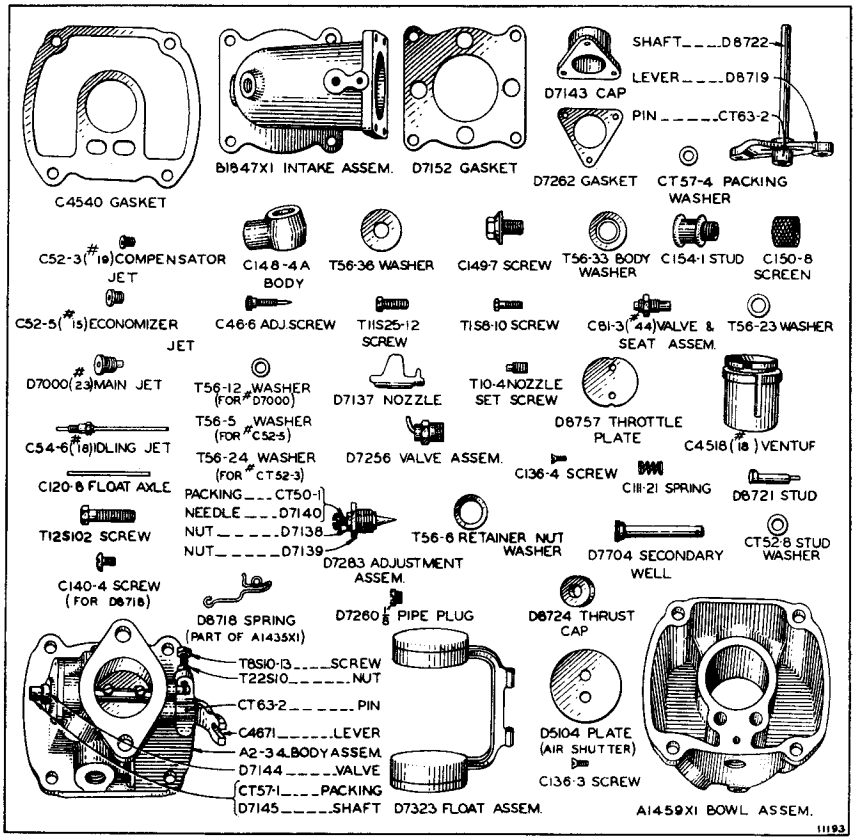


CATERPILLAR NO. 2B5678

(For Gasoline)

NUMBERS SHOWN ARE MANUFACTURERS, NOT "CATERPILLAR" PART NUMBERS, EXCEPT WHEN SPECIFIED.

Remove issue 2 and insert this in its place.

Form 1736 Printed in U.S.A. Issue 3 1-1-38

# EISEMANN SWITCH No. 22010 and No. 17844

Manufacturer
EISEMANN MAGNETO CORPORATION
60 East 42 Street - New York, N. Y.

For Parts Serviced on these Switches Order from the Manufacturer or his Representative

Form 1738 Printed in U.S.A. Issue 1 12-1-34

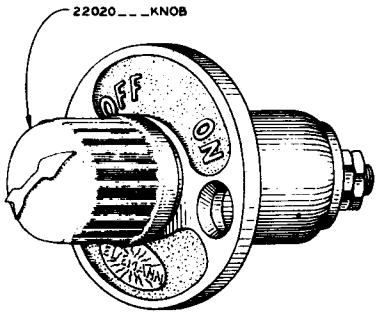


22010 SWITCH ASSEM.
(CATERPILLAR "1B4213)

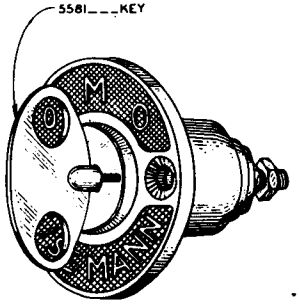


17844 SWITCH ASSEM.
(CATERPILLAR "L-1370)

ONLY SEPARATE PARTS SERVICED WHEN COMPLETE SWITCH IS WANTED ORDER "CATERPILLAR" "1B4213

7214

NUMBERS SHOWN ARE MANUFACTURERS, NOT "CATERPILLAR" PART NUMBERS, EXCEPT WHEN SPECIFIED.

# EISEMANN MAGNETO MODEL GL2

Manufacturer
EISEMANN MAGNETO CORPORATION
60 East 42 Street - New York, N. Y.

For Parts Service on this Magneto, Order from the Manufacturer or his Representative

Form 1736 Printed in U.S.A. Issue 1 2-1-35

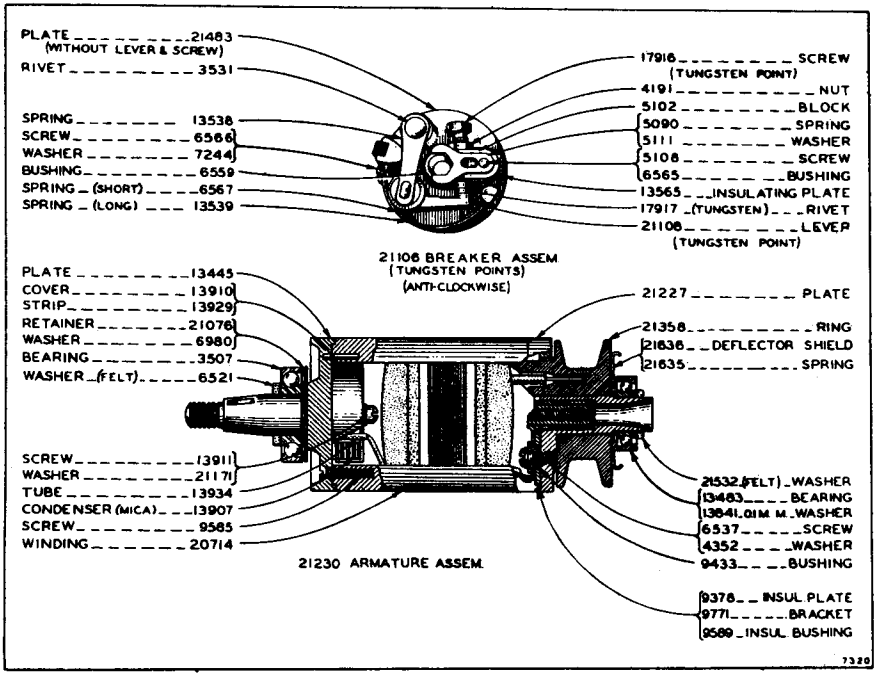


ARMATURE AND BREAKER ASSEMBLIES

MAGNETO - "CATERPILLAR" PART NO. 2A1499
CONSISTS OF:

1 - Magneto - Eisemann Mod. GL2
1 - Impulse Starter - Eisemann Mod. IS-5 (No. 22294)

MAGNETO - "CATERPILLAR" PART NO. 1A9623
CONSISTS OF:

1 - Magneto - Eisemann Mod. GL2
1 - Impulse Starter - Eisemann Mod. IS-5 (No. 22299)

See Page 125 for Separate Parts of Impulse Starter, Floating Disc and Adj. Drive Hub.

Numbers shown are Manufacturers, not "Caterpiller" Part Numbers, except when specified.

Numbers shown are Manufacturers, not "Caterpillar" Part Numbers, except when specified.

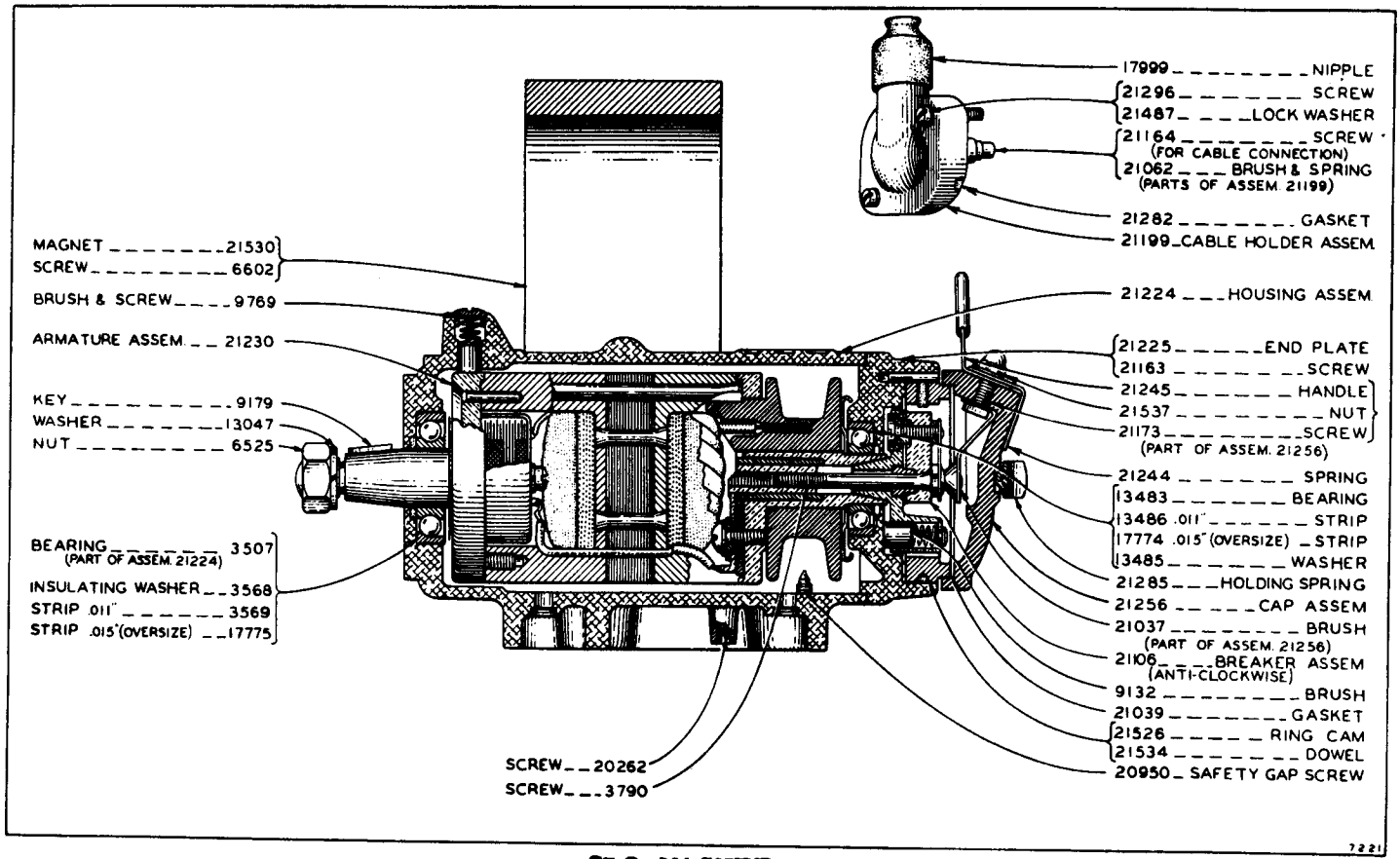


GL2 MAGNETO

# EISEMANN IMPULSE STARTER-MODEL IS-5

Manufacturer
EISEMANN MAGNETO CORPORATION
60 East 42 Street - New York, N. Y.

For Parts Service on this Impulse Starter Order from the Manufacturer or his Representative

Form 1786 Printed in U.S.A. Issue 1 2-1-35

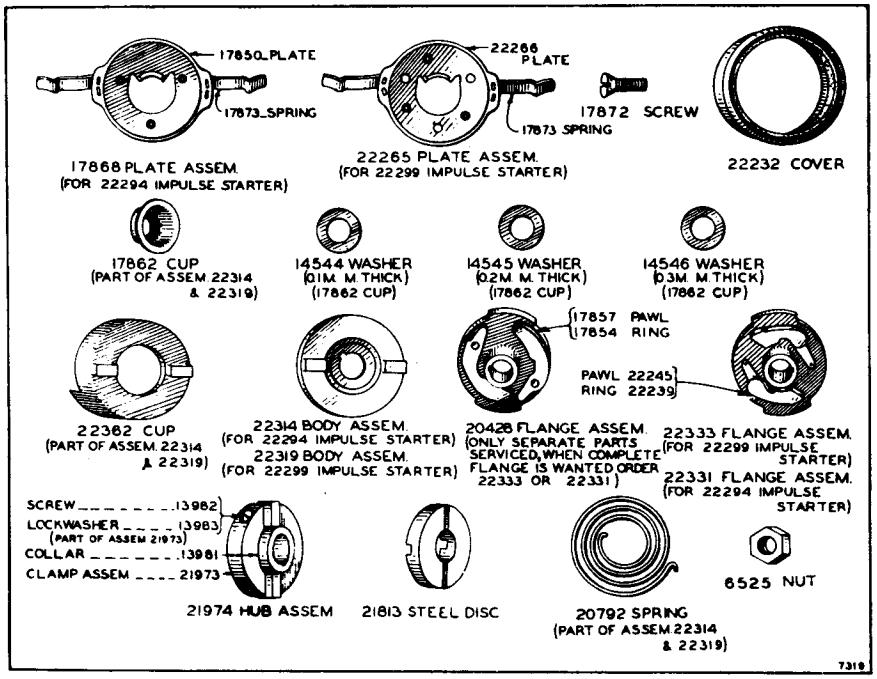


No. 22299 Impulse Starter 200 R. P. M. Cut-out Speed.
No. 22294 Impulse Starter 120 R. P. M. Cut-out Speed.

Numbers shown are Manufacturers, not "Caterpillar" Part Numbers, except when specified.

# BOSCH GENERATOR RJB $\frac{75}{6}$ 900R S50

Manufacturer
UNITED AMERICAN BOSCH CORPORATION
Springfield, Massachusetts

For Parts Service on this Generator Order from the Manufacturer or his Representative

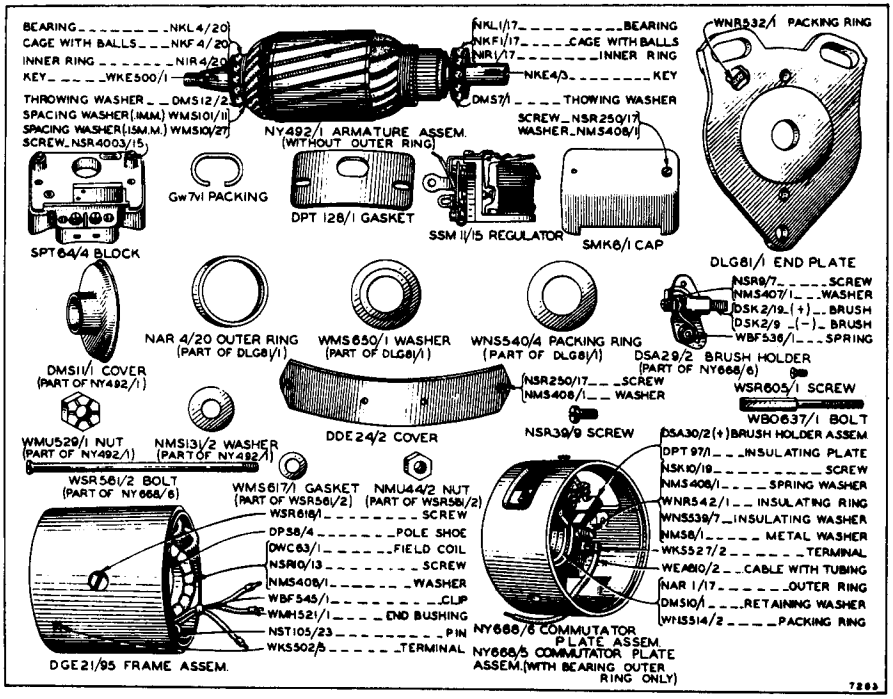


"CATERPILLAR" NO. 1A106 (CLOCKWISE ROTATION)
"CATERPILLAR" NO. 1B8907 (COUNTERCLOCKWISE ROTATION)

Numbers shown are Manufacturers, not "Caterpillar" Part Numbers, except when specified.

Form 1736 Printed in U.S.A.—Issue 1—1-1-35

# DELCO-REMY STARTER MODEL SM1468

Manufacturer
DELCO-REMY CORPORATION
Anderson, Indiana

For Parts Service on this Starter, Order from the United Motors Service Corp. or their Representative

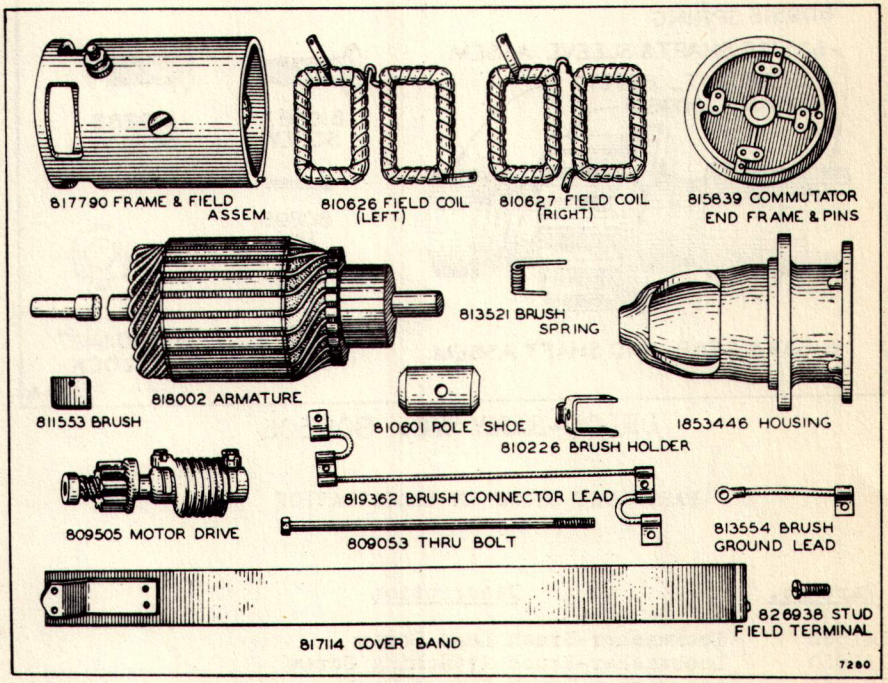


CATERPILLAR NO. 1B6889

Numbers shown are Manufacturers, not "Caterpillar" Part Numbers, except when specified.

Form 1736 Printed in U.S.A.—Issue 1—1-1-35

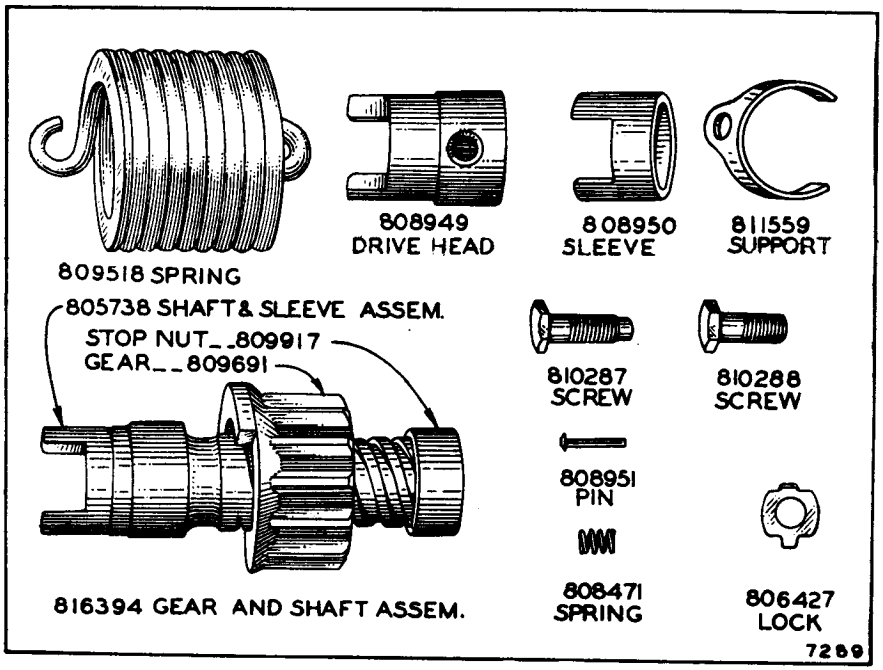


DELCO-REMY NO. 809505

PARTS NOT SHOWN IN ILLUSTRATION

| Part No. | Description |
|---|---|
| 141552 | Lockwasher-Brush Lead Screw |
| 141550 | Lockwasher-Brush Attaching Screw |
| 141551 | Lockwasher-Brush Ground Screw |
| 142248 | Lockwasher-Terminal Stud |
| 141553 | Lockwasher-Thru Bolt |
| 805258 | Nut-Terminal Stud |
| 135616 | Screw-Brush to Field Lead |
| 114935 | Screw-Brush Ground Lead |
| 115903 | Screw-Brush Attaching |
| 828675 | Screw-Pole Shoe |
| 1849774 | Washer-Space D.E. - .626 x 1.062 x 3-32 |
| 809815 | Washer-Space (Bendix Shaft) |
| 833602 | Washer-Space D.E. (Bendix Shaft) |
| 833602 | Washer-Space C.E. |
| 817077 | Washer-Terminal Stud Insulation (3/4 O.D.) |
| 809051 | Washer-Terminal Stud Insulation Bushing (9-16 O.D.) |
| 805790 | Washer-Terminal Stud Plain |
| 817313 | Pin-Brush Holder Hinge |
| 812016 | Brush Holder Hinge Pin and Insulation |
| 817314 | Pin-Brush Holder Stop |
| 812015 | Brush Holder Stop Pin and Insulation |
| 809593 | Pin-Dowel-D.E. |
| 810824 | Wedge-Field Terminal |
| 124546 | Key-Woodruff-for Gear |

**Numbers shown are Manufacturers, not "Caterpillar" Part Numbers, except when specified.**

# ZENITH CARBURETOR - TYPE K5A, 1¼" NO. 7070

Manufacturer
ZENITH CARBURETOR CO.
696 Hart Avenue
Detroit, Michigan

For Parts Service on this Carburetor, Order from the Manufacturer or his Representative

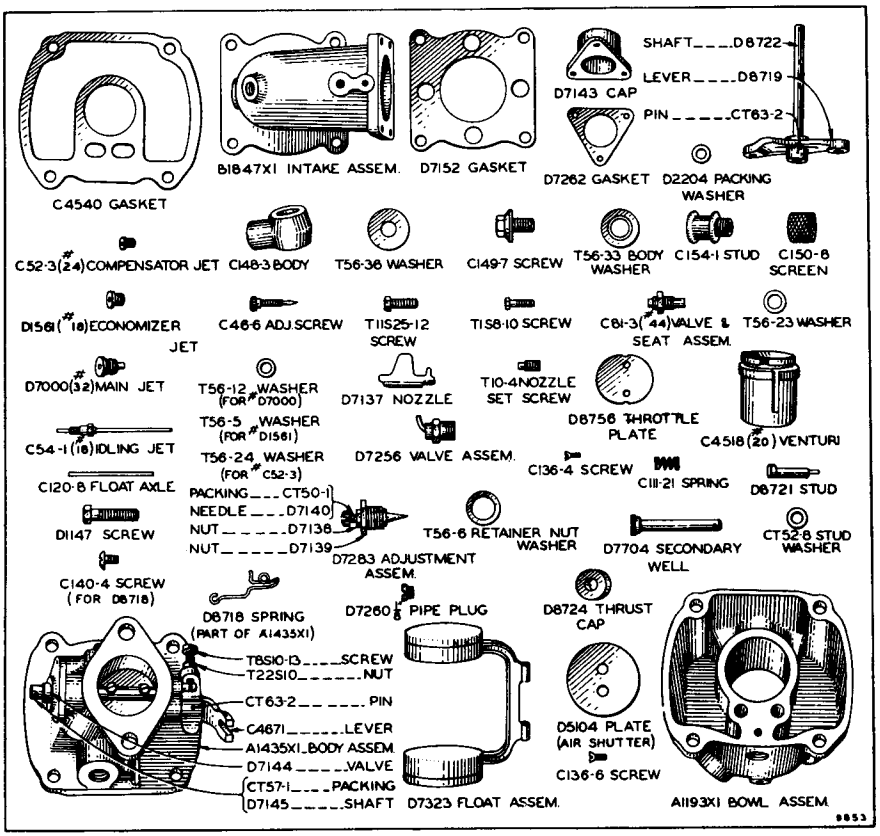


CATERPILLAR NO. 2B5738
(For use with tractor fuel)

NUMBERS SHOWN ARE MANUFACTURERS, NOT "CATERPILLAR" PART NUMBERS, EXCEPT WHEN SPECIFIED.

REMOVE ISSUE 2 AND INSERT THIS IN ITS PLACE.

Form 1736 Printed in U. S. A. Issue 3 11-1-36

Remove Issue 1 and insert this in its place.

Form 1736 Printed in U.S.A. Issue 2 6-1-35

# BOSCH MAGNETO MODEL ZR-4 ED. 34

Manufacturer
UNITED AMERICAN BOSCH CORPORATION
Springfield, Massachusetts

For Parts Service on this Magneto Order from the Manufacturer or his Representative

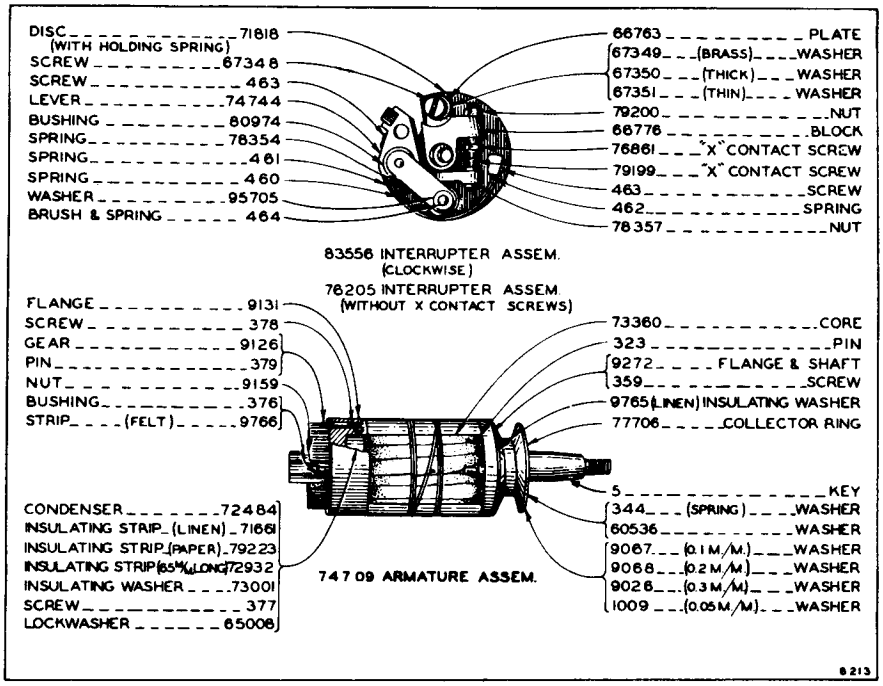


ARMATURE AND BREAKER ASSEMBLIES

BOSCH MAGNETO ZR-4 ED. 34
Consists of:
1 - Magneto - Bosch Mod. ZR-4 ED. 34.
1 - Impulse Starter Bosch Mod. IS.

See Page 117 for Separate Parts of Impulse Starter.

Numbers shown are Manufacturers, not "Caterpillar" Part Numbers, except when specified.

Numbers shown are Manufacturers, not "Caterpillar" Part Numbers, except when specified.

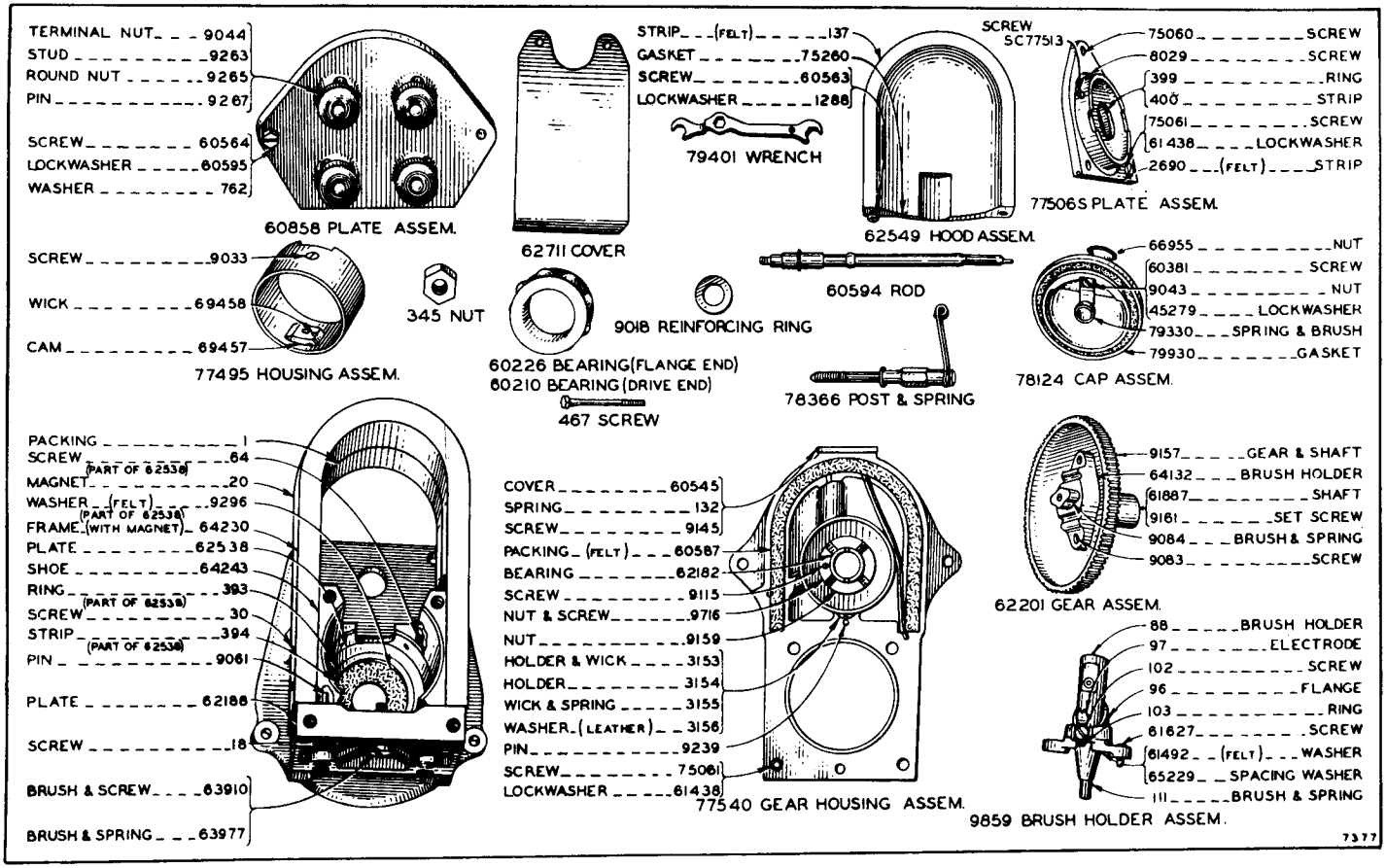


ZR-4 ED. 34 MAGNETO

# BOSCH SWITCH No. S-12

Manufacturer
UNITED AMERICAN BOSCH CORPORATION
Springfield, Massachusetts

For Parts Service on this Switch Order from the Manufacturer or his Representative

Form 1736 Printed in U.S.A. Issue 1 2-1-35

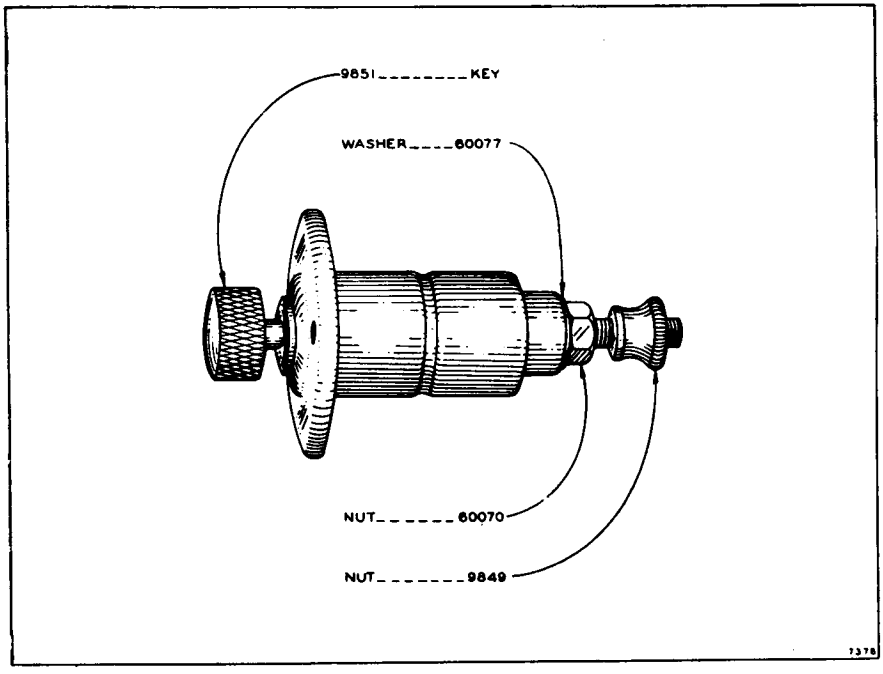


CATERPILLAR NO. 2656-A

Numbers shown are Manufacturers, not "Caterpillar" Part Numbers, except when specified.

# DELCO-REMY GENERATOR MODEL 945-W

Manufacturer
DELCO-REMY CORPORATION
Anderson, Indiana

For Parts Service on this Generator, Order from the United Motors Service Corp. or their Representative

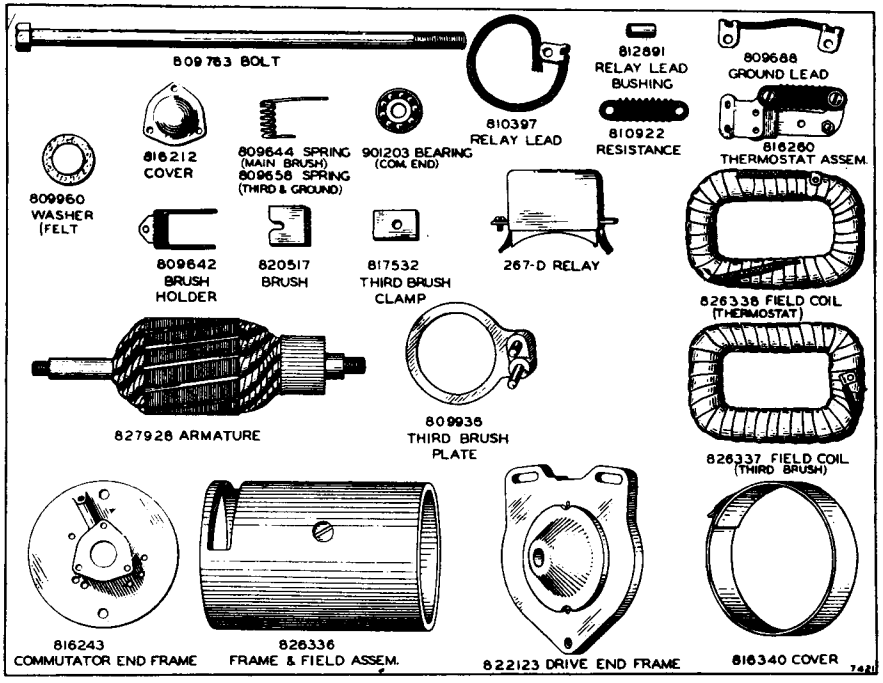


"CATERPILLAR" NO. 2B6745

(Note: List of Parts not shown in this illustration on back of page.)

Numbers shown are Manufacturers, not "Caterpillar" Part Numbers, except when specified.

Form 1736 Printed in U.S.A. Issue 1 2-1-35

## PARTS NOT SHOWN IN ILLUSTRATION

| Part No. | Description |
|---|---|
| 141550 | Lockwasher-Brush Attaching Screw |
| 802730 | Lockwasher-Brush Lead Screw |
| 802729 | Lockwasher-Relay Attaching Screw |
| 141550 | Lockwasher-Thru Bolt |
| 802730 | Lockwasher-Thermostat Resistance Screw |
| 141555 | Lockwasher-Thermostat Attaching Screw |
| 802730 | Lockwasher-Thermostat Terminal Screw |
| 141552 | Lockwasher-Third Brush Clamp Screw |
| 114496 | Nut-Shaft-C.E. |
| 103047 | Nut-Shaft-D.E. |
| 115903 | Screw-Brush Attaching |
| 141540 | Screw-Brush Lead |
| 115489 | Screw-Commutator End Frame Cover Plate |
| 828675 | Screw-Pole Shoe |
| 115436 | Screw-Relay Attaching |
| 141541 | Screw-Thermostat Resistance |
| 141541 | Screw-Thermostat Attaching |
| 141541 | Screw-Thermostat Terminal |
| 141543 | Screw-Third Brush Clamp |
| 809945 | Washer-Bearing Space |
| 809551 | Washer-Brush Screw |
| 807405 | Washer-Shaft Nut |
| 809824 | Washer-Third Brush Plate Spring |
| 1840738 | Third Brush Plate Stop Pin |
| 812016 | Brush Holder Pin and Insulation |
| 812015 | Brush Stop Pin and Insulation |
| 1835457 | Gasket-Commutator End Cover Plate |
| 809062 | Dowel Pin-C.E. |
| 809593 | Dowel Pin-D.E. |
| 802692 | Oil Wick-C.E. |
| 114998 | Oiler-C.E. |
| 820547 | Oil Baffle |
| 186323 | Pole Shoe |
| 831187 | Relay Lead Terminal Clip |
| 809614 | Third Brush Plate Spring-Washer Pin |
| 103906 | Woodruff Key-D.E. |
| 811681 | Oil Throwing Collar-C.E.-Inside |

Numbers shown are Manufacturers, not "Caterpillar" Part Numbers, except when specified.

# DELCO-REMY STARTER MODEL 736-D

**Manufacturer**
**DELCO-REMY CORPORATION**
**Anderson, Indiana**

**For Parts Service on this Starter, Order from the United Motors Service Corp. or their Representative**

Form 1736 Printed in U.S.A. Issue 1 2-1-35

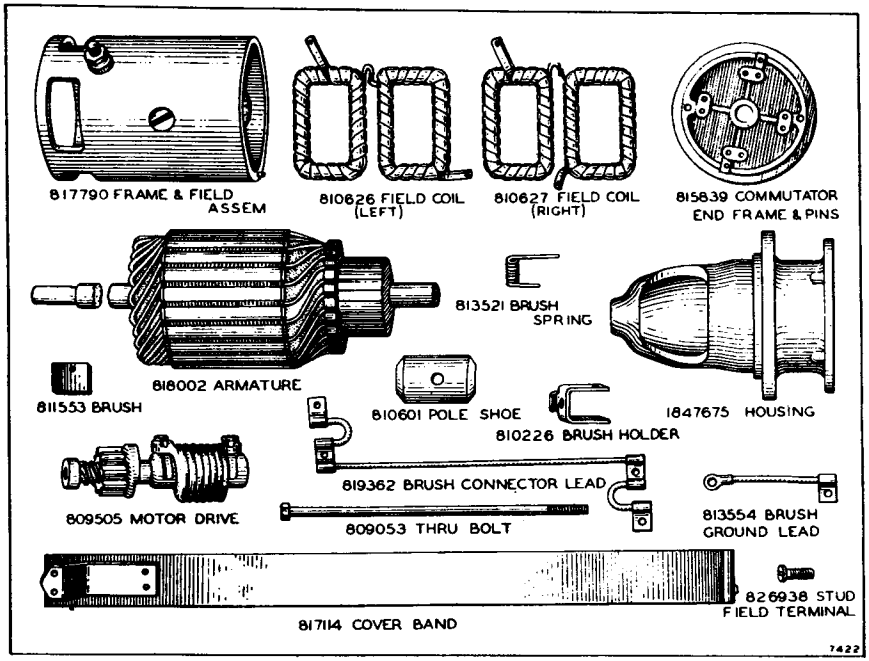


"CATERPILLAR" NO. 1B5784

(Note: List of Parts not shown in this illustration on back of page.)

Numbers shown are Manufacturers, not "Caterpillar" Part Numbers, except when specified.

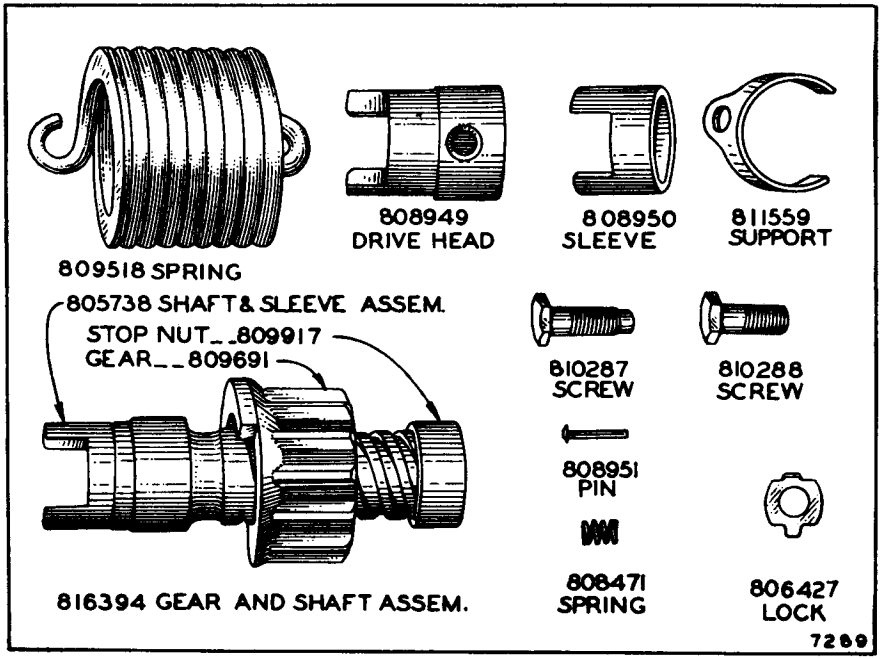


# DELCO - REMY NO. 809505

PARTS NOT SHOWN IN ILLUSTRATION

| Part No. | Description |
|---|---|
| 141550 | Lockwasher-Brush Attaching Screw |
| 141551 | Lockwasher-Brush Ground Lead Screw |
| 141552 | Lockwasher-Brush Lead Screw |
| 142248 | Lockwasher-Terminal Stud Nut |
| 141553 | Lockwasher-Thru Bolt |
| 805258 | Nut-Terminal Stud |
| 833602 | Space Washer-C.E. and D.E. - .563 I.D. |
| 812496 | Space Washer-D.E. - .626 I.D.x 1.062 O.D.x 3/32 |
| 812664 | Space Washer-D.E. - .626 I.D.x 1.062 O.D.x 1/16 |
| 817077 | Terminal Stud Insulation Washer-3/4 O.D. |
| 809051 | Terminal Stud Insulation Washer-9/16 O.D. |
| 805790 | Terminal Stud Plain Washer |
| 810620 | Bushing (Motor Drive Housing) |
| 817313 | Brush Holder Hinge Pin |
| 812016 | Brush Holder Hinge Pin and Insulation |
| 817314 | Brush Holder Stop Pin |
| 812015 | Brush Holder Stop Pin and Insulation |
| 809062 | Dowel Pin-C.E. |
| 809593 | Dowel Pin-D.E. |
| 810819 | End Plug |
| 114998 | Oiler-C.E. |
| 802691 | Oil Wick |
| 810824 | Terminal Wedge |
| 124546 | Woodruff Key |

Numbers shown are Manufacturers, not "Caterpillar" Part Numbers, except when specified.

# BOSCH GENERATOR MODEL RJB $\frac{75}{6}$-900RS51

**Manufacturer**
**UNITED AMERICAN BOSCH CORPORATION**
**Springfield, Massachusetts**

**For Parts Service on this Generator, Order from the Manufacturer or his Representative**

Form 1736 Printed in U.S.A. Issue 1 2-1-35

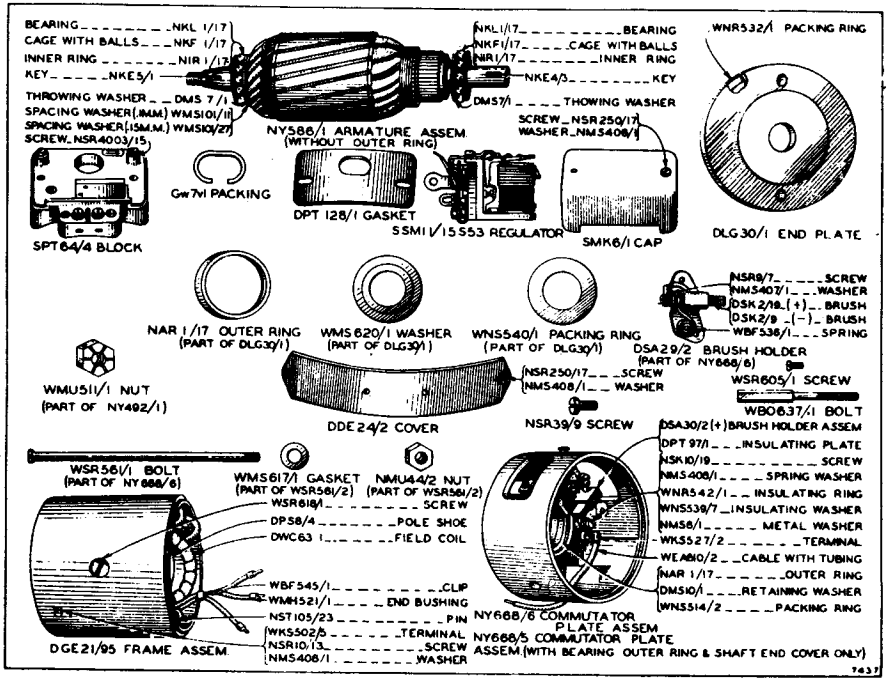


CATERPILLAR NO. 1A107

Numbers shown are Manufacturers, not "Caterpillar" Part Numbers, except when specified.

# VIKING FUEL PUMP MODEL ECH-2

Manufacturer
VIKING PUMP COMPANY
Cedar Falls, Iowa

For Parts Service on this Pump, Order from the Manufacturer or his Representative

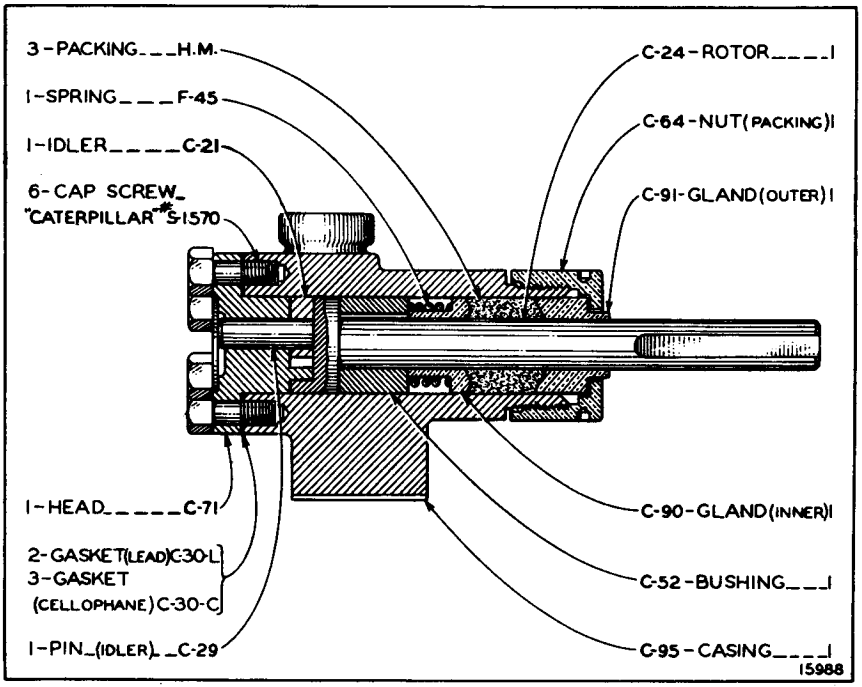


"CATERPILLAR" NO. 2B712

NUMBERS SHOWN ARE MANUFACTURERS, NOT "CATERPILLAR" PART NUMBERS, EXCEPT WHEN SPECIFIED.

Remove Issue 1 and insert this in it's place.

Form 1736 Printed in U.S.A. Issue 2 4-1-41

# VIKING FUEL PUMP B-90-D

Manufacturer
VIKING PUMP COMPANY
Cedar Falls, Iowa

For Parts Service on this Pump, Order from the Manufacturer or his Representative

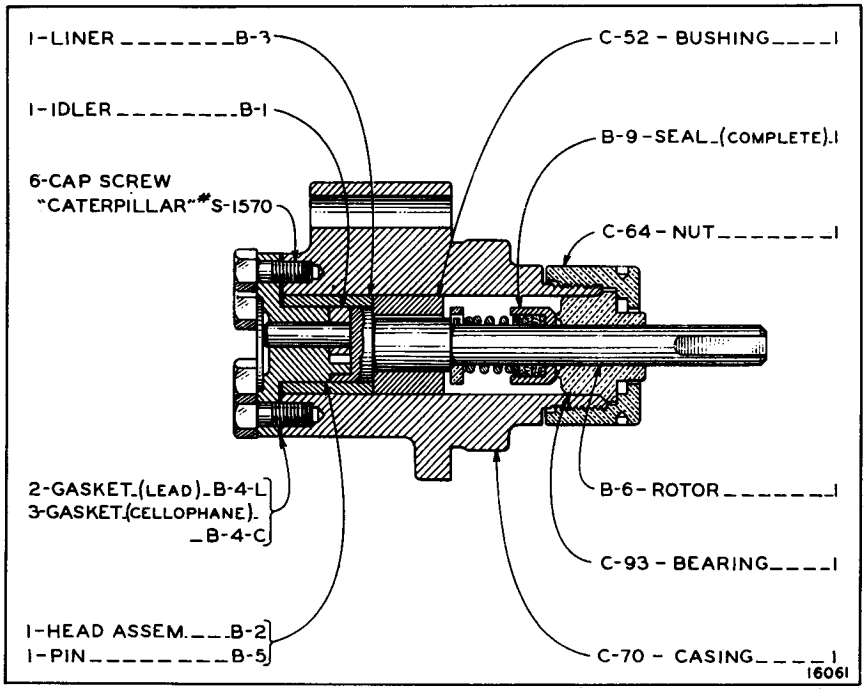


"CATERPILLAR" NO. 2B2692

Remove Issue 1 and insert this in its place.

Form 1736 Printed in U.S.A. Issue 2 2-1-41

NUMBERS SHOWN ARE MANUFACTURERS, NOT "CATERPILLAR" PART NUMBERS, EXCEPT WHEN SPECIFIED.

# EISEMANN MAGNETO MODEL GL-4

**Manufacturer**
**EISEMANN MAGNETO CORPORATION**
**60 East 42 Street - New York, N. Y.**

**For Parts Service on this Magneto, Order from the Manufacturer or his Representative**

Form 1736 Printed in U.S.A. Issue 1 4-1-35

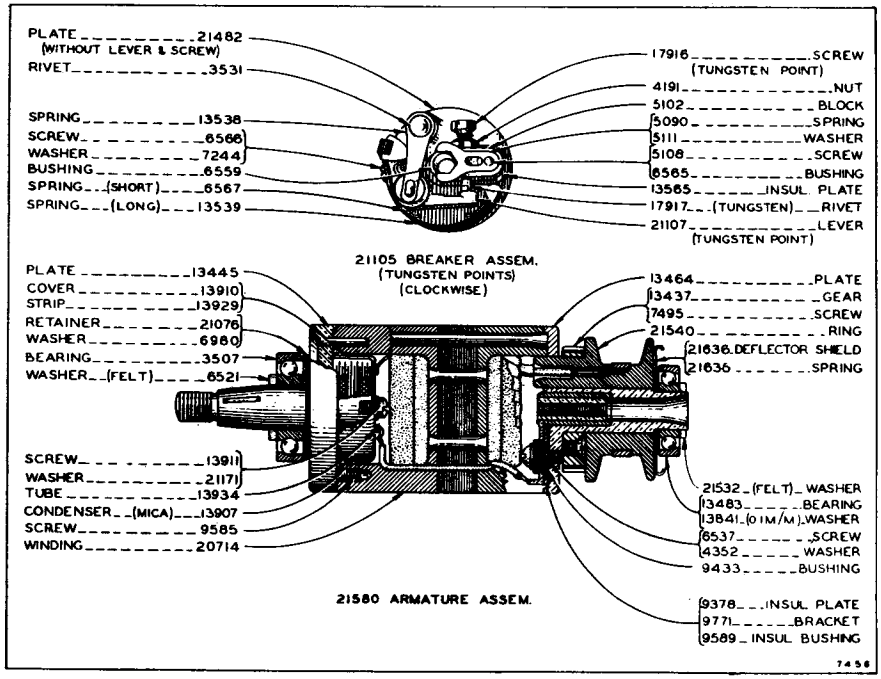


## ARMATURE AND BREAKER ASSEMBLIES

## MAGNETO-"CATERPILLAR" PART NO. 1C-1413
Consists of:

1-Magneto-Eisemann Mod. GL-4
1-Impulse Starter-Eisemann Mod. 1S-5 No. 22285

See Page 132 for Separate Parts of 1S-5 Impulse Starter, (No.22285) Floating Disc and Adjustable Drive Hub.

NUMBERS SHOWN ARE MANUFACTURERS, NOT "CATERPILLAR" PART NUMBERS, EXCEPT WHEN SPECIFIED.

NUMBERS SHOWN ARE MANUFACTURERS, NOT "CATERPILLAR" PART NUMBERS, EXCEPT WHEN SPECIFIED.

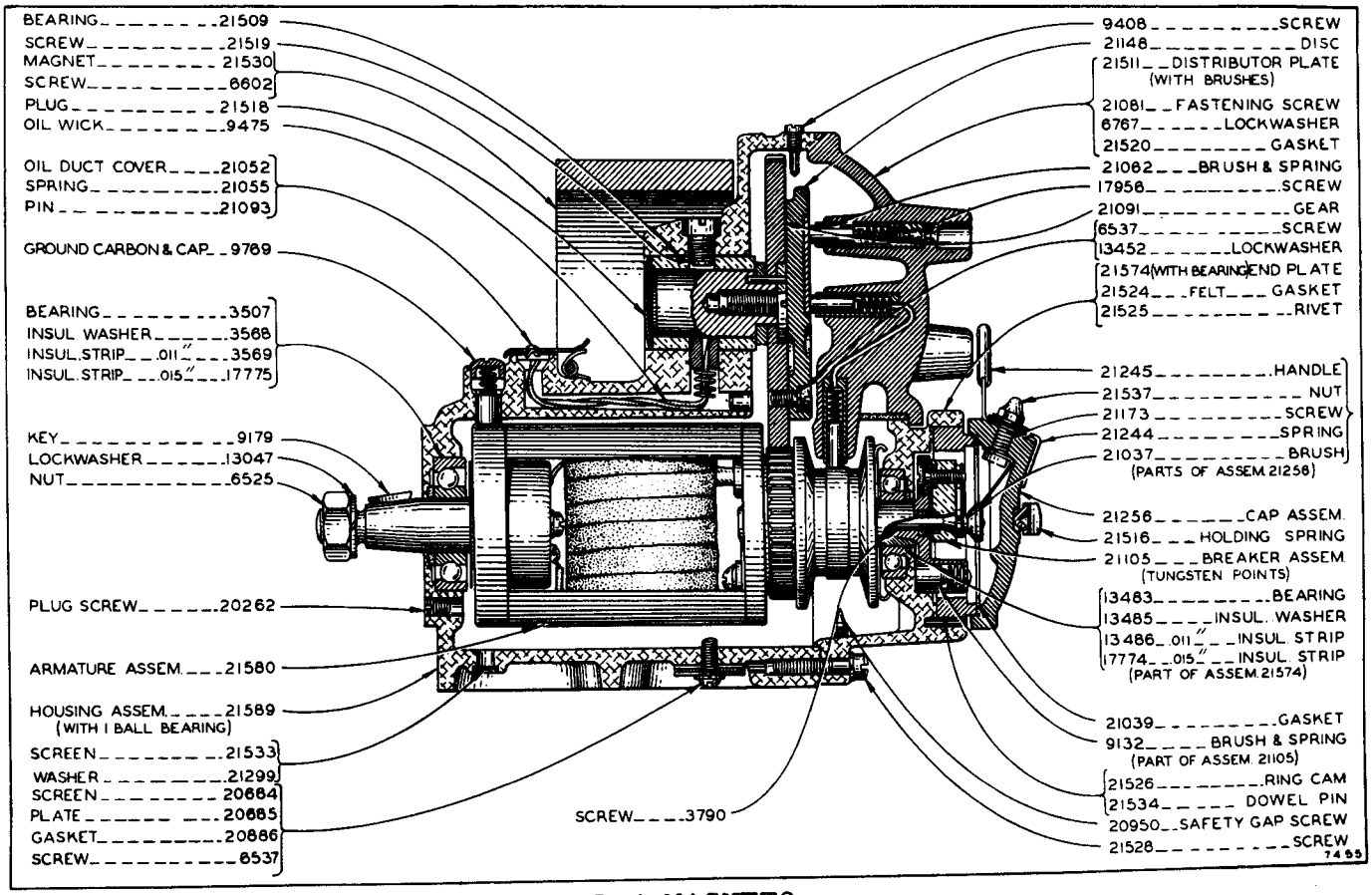


GL-4 MAGNETO

Remove issue 1 and insert this in its place.

Form 1786 Printed in U.S.A. Issue 2 6-1-35

# BOSCH MAGNETO ZR4, ED. 28

Manufacturer
UNITED AMERICAN BOSCH CORPORATION
Springfield, Massachusetts

For Parts Service on this Magneto, Order from the Manufacturer or his Representative

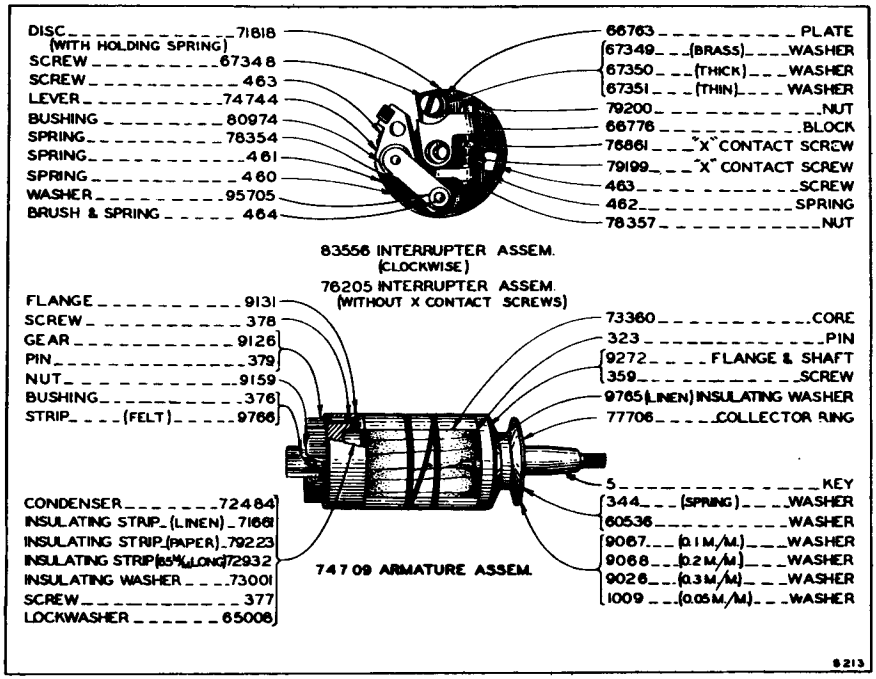


## ARMATURE AND BREAKER ASSEMBLIES

BOSCH MAGNETO ZR-4, ED. 28
Consists of:
1 - Magneto - Bosch Mod. ZR-4, ED. 28.
1 - Impulse Starter Bosch Mod. IS.

See Page 117 for Separate Parts or Impulse Starter.

NUMBERS SHOWN ARE MANUFACTURERS, NOT "CATERPILLAR" PART NUMBERS, EXCEPT WHEN SPECIFIED.

Numbers shown are Manufacturers, not "Caterpillar" Part Numbers, except when specified.

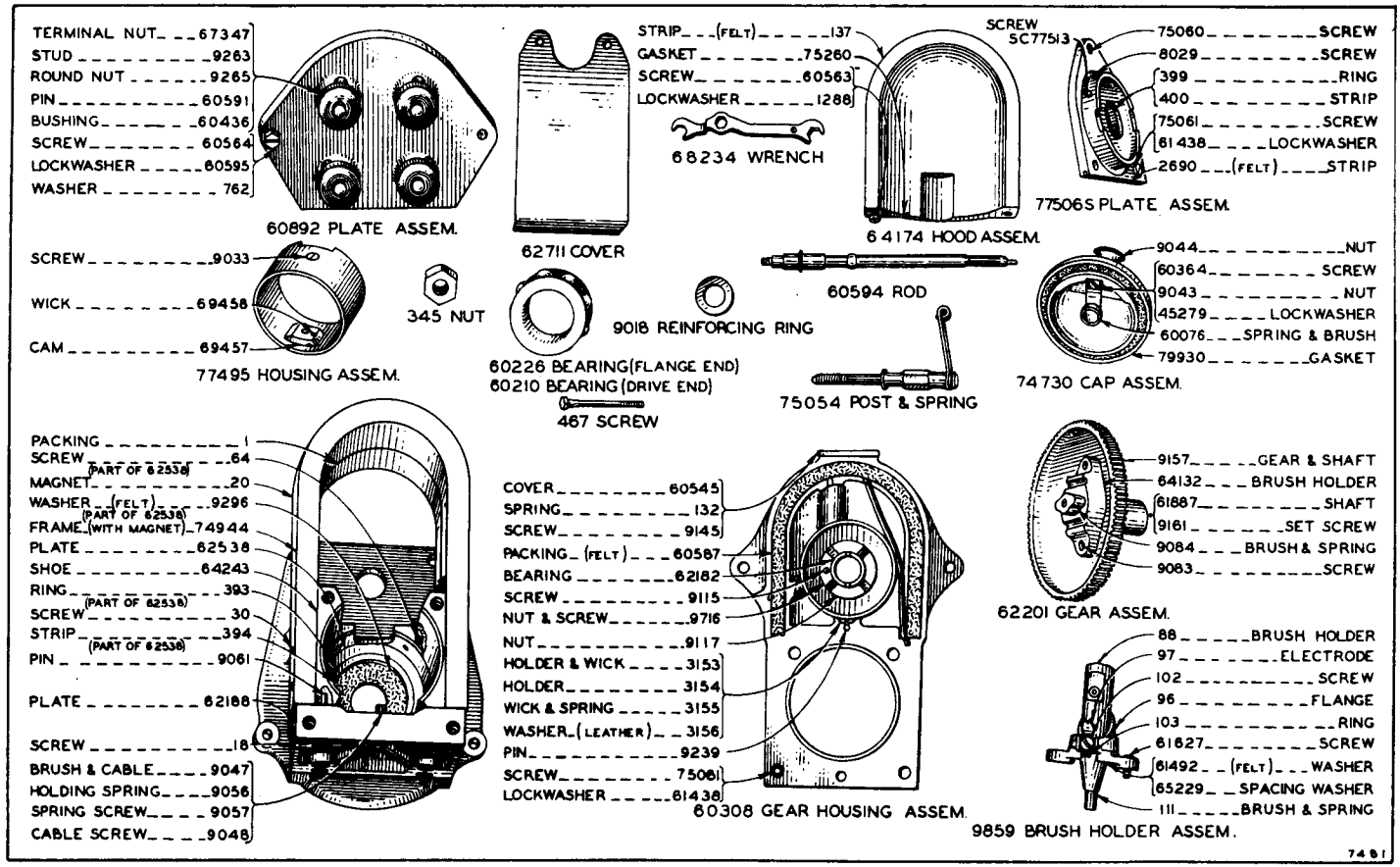


ZR4 ED 28 MAGNETO

# BOSCH GENERATOR RJB $\frac{75}{6}$ 900R S70

**Manufacturer**
**UNITED AMERICAN BOSCH CORPORATION**
**Springfield, Massachusetts**

**For Parts Service on this Generator, Order from the Manufacturer or his Representative**

Form 1736 Printed in U.S.A. Issue 1 8-1-35

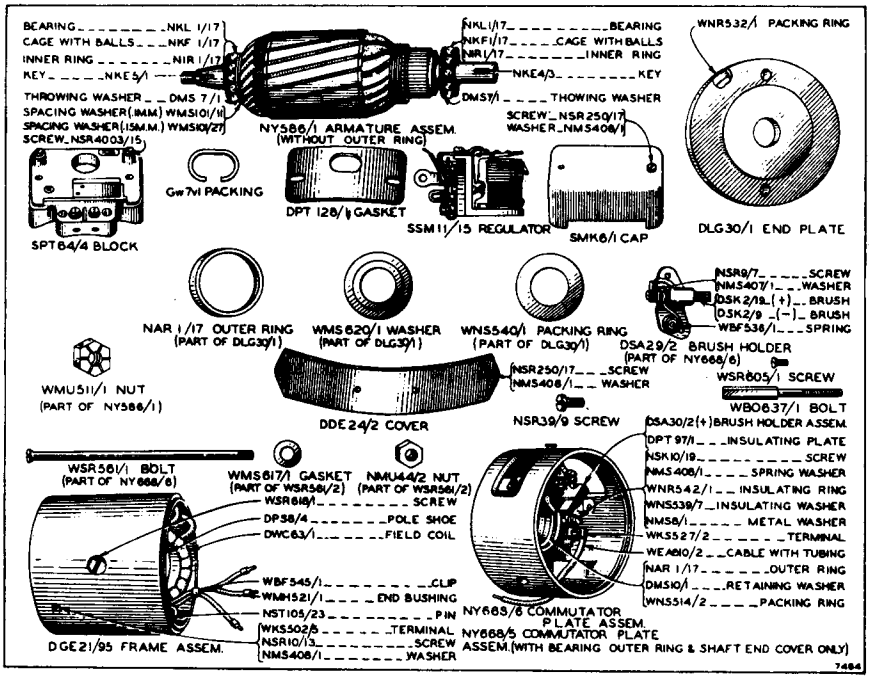


"CATERPILLAR" NO. 1B1011

Numbers shown are Manufacturers, not "Caterpillar" Part Numbers, except when specified.

# ENSIGN CARBURETOR—TYPE BeVc 1"

Manufacturer
ENSIGN CARBURETOR CO., LTD.
7010 S. Alameda St. or 450 East Ohio St.
Huntington Park, Calif. Chicago, Ill.

For Parts Service on this Carburetor Order from the Manufacturer or his Representative

Form 1736 Printed in U.S.A. Issue 1 -35

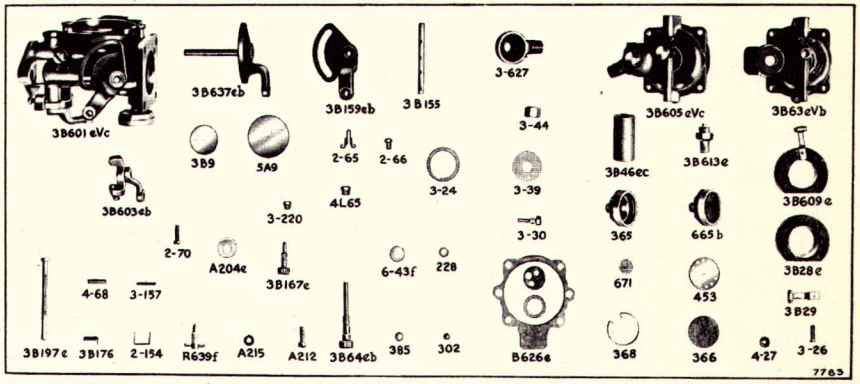


## CATERPILLAR NO. 2A1516

| Part No. | Description |
|---|---|
| 3B9 | Throttle Disc |
| 5A9 | Choke Disc |
| 3-24 | Strainer Cage Gasket |
| 3-26 | Float Lever Screw |
| 4-27 | Float Lever Screw Washer |
| 3B28e | Cork Float |
| 3B29 | Float Lever |
| 3-30 | Float Lever Pivot |
| 3-39 | Strainer Cage Screen |
| 6-43f | 1/2" Welch Plug |
| 3-44 | Strainer Cage Nut |
| 3B46ec | Fuel Control |
| 3B63eVb | Fuel Bowl Cover |
| 3B64eb | Fuel Adjusting Screw |
| 2-65 | Adjustment Retainer (2 used in Carburetor) |
| 2-66 | Retainer Screws (4 used in Carburetor) |
| 4-68 | Throttle Stop Pin |
| 2-70 | Throttle Stop Adjusting Screw |
| 2-154 | Disc Staple (2 used in Throttle Tube) |
| 3B155 | Choke Shaft |
| 3-157 | Choke Lever Pin |
| 3B159eb | Choke Lever |
| 3B167e | Idling Adjustment Screw |
| 3B176 | Throttle Bearing Bushings (2 used in Throttle Tube) |
| 3B197e | Throttle Shaft and Head |
| A204e | Throttle Dust Washer |
| A212 | Fuel Bowl Cover Screws (4 used in Fuel Bowl) |

| Part No. | Description |
|---|---|
| A-215 | Fuel Bowl Screw Lockwashers (4 used in Fuel Bowl) |
| 3-220 | Screw Plugs |
| 228 | 5/16" Welch Plugs (2 used in Carburetor) |
| 302 | 3/16" Welch Plugs (5 used in Carburetor) |
| 365 | Drain Filter Body |
| 366 | Drain Filter Felt |
| 368 | Drain Filter Ring |
| 385 | 1/4" Welch Plugs (4 used in Throttle Tube) |
| 453 | Drain Filter Screen |
| **BLEEDS** | |
| 4L65 | "L" Bleed Screw |
| **ASSEMBLIES** | |
| 3B601eVc | Throttle Tube Assem. |
| 3B603eb | Throttle Stop Lever Assem. |
| 3B605eVc | Fuel Bowl Cover Assem. |
| 3B609e | Float Assem. (Cork) |
| 3B613e | Float Valve Assem. |
| B626e | Control and Bowl Gasket Assem. |
| 3-627 | Strainer Cage Assem. |
| 3B637eb | Choke Shaft and Stop Lever Assem. |
| R639f | Drain Cock Needle and Handle Assem. |
| 665b | Drain Filter Assem. |
| 671 | Drain Filter Wire Screen Assem. |

**NUMBERS SHOWN ARE MANUFACTURERS, NOT "CATERPILLAR" PART NUMBERS, EXCEPT WHEN SPECIFIED.**

# BOSCH GENERATOR RJB $\frac{75}{6}$ 900R S71

**Manufacturer**
**UNITED AMERICAN BOSCH CORPORATION**
**Springfield, Massachusetts**

**For Parts Service on this Generator Order from the Manufacturer or his Representative**

Form 1786 Printed in U.S.A. Issue 1 5-1-35

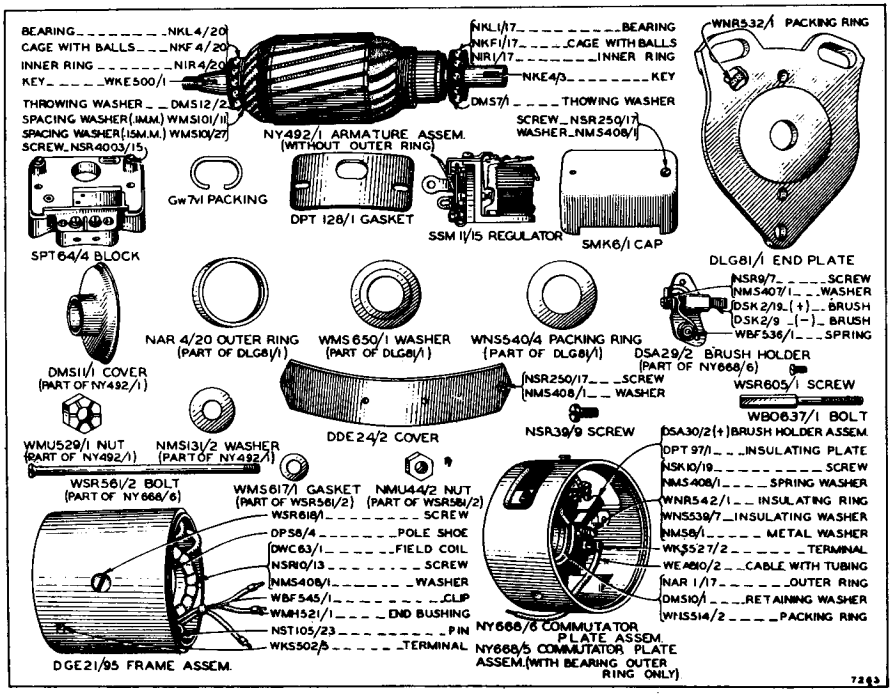


"CATERPILLAR" NO. 1B1012 (Clockwise Rotation)
"CATERPILLAR" NO. 1B9153 (Counter Clockwise Rotation)

(For use with battery)

NUMBERS SHOWN ARE MANUFACTURERS, NOT "CATERPILLAR" PART NUMBERS, EXCEPT WHEN SPECIFIED.

# ENSIGN CARBURETOR—TYPE Kge 1¼"

Manufacturer
ENSIGN CARBURETOR CO., LTD.
7010 S. Alameda St. or 450 East Ohio St.
Huntington Park, Calif. Chicago, Ill.

For Parts Service on this Carburetor Order from the Manufacturer or his Representative

Form 1736 Printed in U.S.A. Issue 1 6-1-35

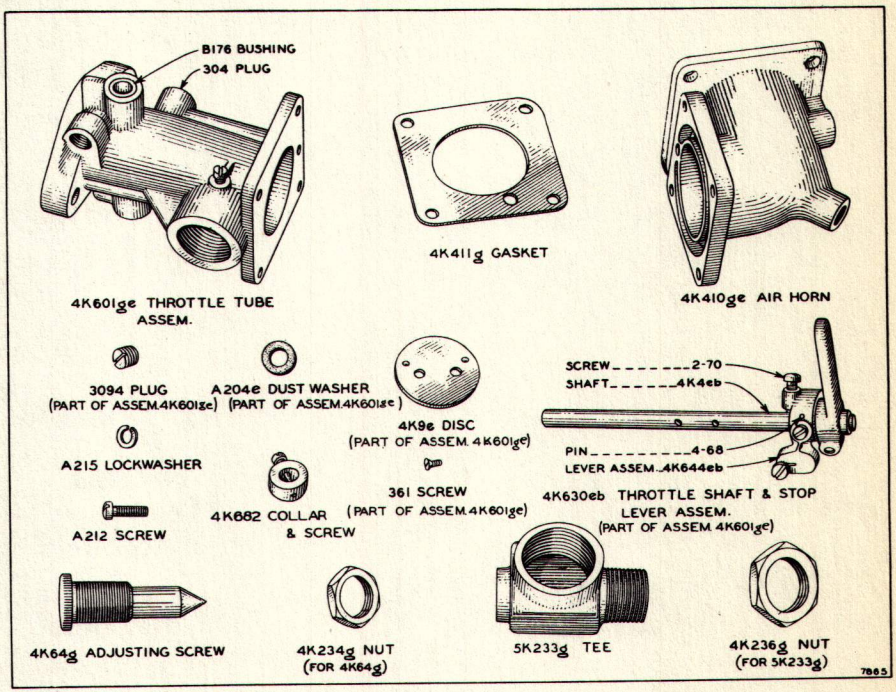


## CATERPILLAR NO. 2B2936

(For use with natural gas)

Numbers shown are Manufacturers, not "Caterpillar" Part Numbers, except when specified.

# ENSIGN CARBURETOR—TYPE Kge 1½"

**Manufacturer**
**ENSIGN CARBURETOR CO., LTD.**
**7010 S. Alameda St. or 450 East Ohio St.**
**Huntington Park, Calif. Chicago, Ill.**

**For Parts Service on this Carburetor Order from the Manufacturer or his Representative**

Form 1736 Printed in U.S.A. Issue 1 6-1-35

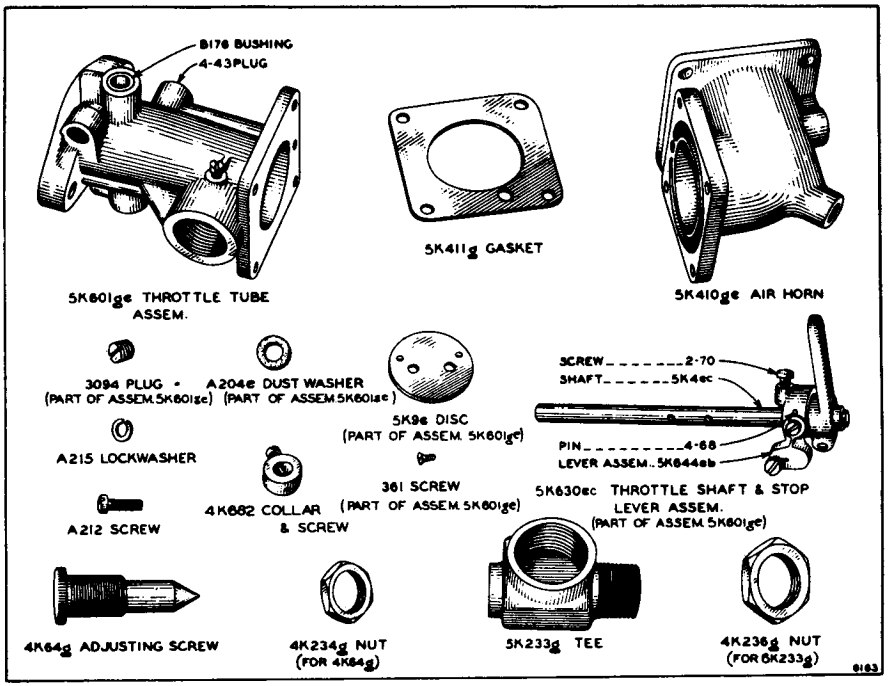


CATERPILLAR NO. 2B3035

(For use with natural gas)

NUMBERS SHOWN ARE MANUFACTURERS, NOT "CATERPILLAR" PART NUMBERS, EXCEPT WHEN SPECIFIED.

# ENSIGN CARBURETOR—TYPE Kge 1¾"

Manufacturer
ENSIGN CARBURETOR CO., LTD.
7010 S. Alameda St. or 450 East Ohio St.
Huntington Park, Calif. Chicago, Ill.

For Parts Service on this Carburetor Order from the Manufacturer or his Representative

Form 1736 Printed in U.S.A. Issue 1 6-1-35

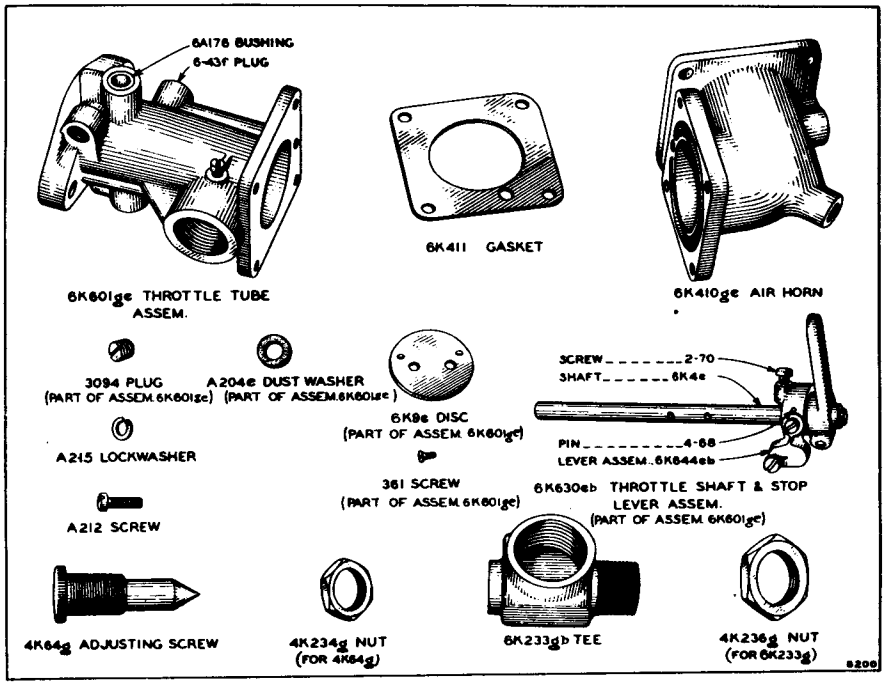


## CATERPILLAR NO. 2B2277

**(For use with natural gas)**

NUMBERS SHOWN ARE MANUFACTURERS, NOT "CATERPILLAR" PART NUMBERS, EXCEPT WHEN SPECIFIED.

# BOSCH IMPULSE STARTER IC-400 ED. 1

Manufacturer
UNITED AMERICAN BOSCH CORPORATION
Springfield, Massachusetts

For Parts Service on this Impulse Starter Order from the Manufacturer or his Representative

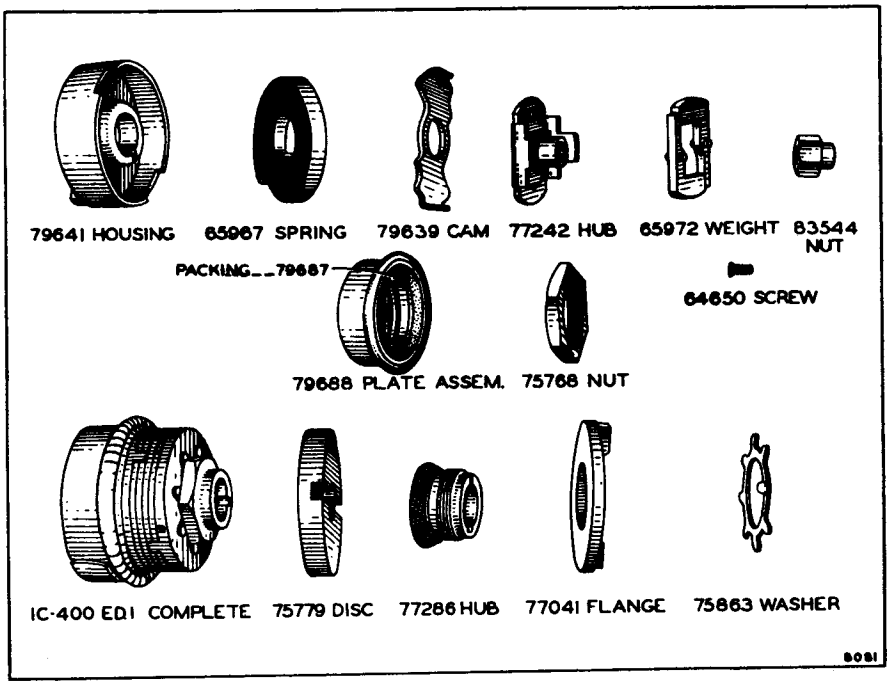


Form 1736 Printed in U.S.A. Issue 1 6-1-55

NUMBERS SHOWN ARE MANUFACTURERS, NOT "CATERPILLAR" PART NUMBERS, EXCEPT WHEN SPECIFIED.

# ENSIGN CARBURETOR—TYPE K3 1¼"

Form 1736 Printed in U.S.A. Issue 1 6-1-35

**Manufacturer**
**ENSIGN CARBURETOR CO., LTD.**
**7010 S. Alameda St. or 450 East Ohio St.**
**Huntington Park, Calif. Chicago, Ill.**

**For Parts Service on this Carburetor Order from the Manufacturer or his Representative**

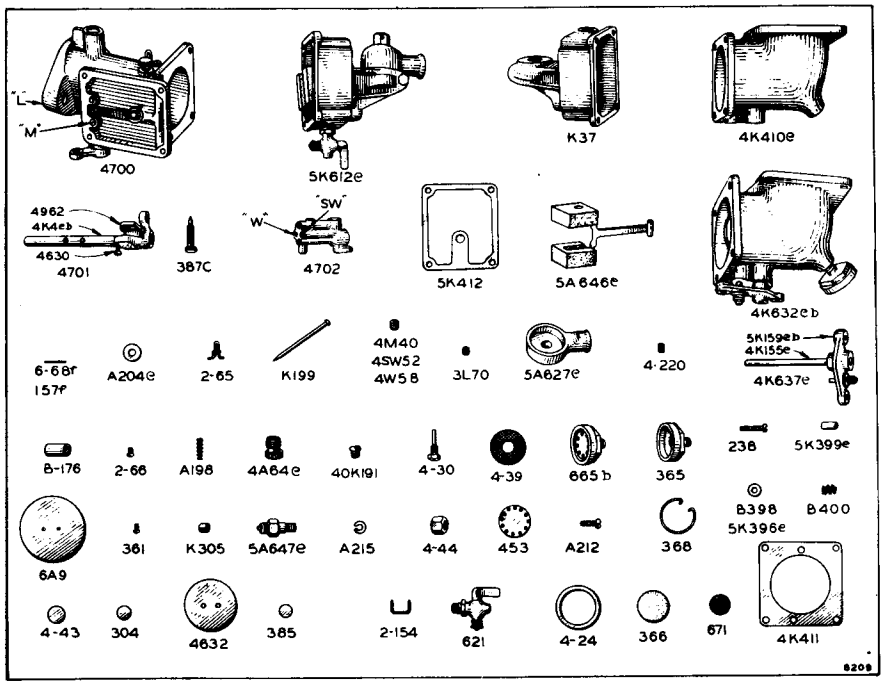


CATERPILLAR NO. 2B8261

(See list of parts on back of page)

NUMBERS SHOWN ARE MANUFACTURERS, NOT "CATERPILLAR" PART NUMBERS, EXCEPT WHEN SPECIFIED.

| Part No. | Description |
|---|---|
| 4K4eb | Throttle Shaft |
| 6A9 | Choke Disc |
| 4-24 | Strainer Cage Gasket |
| 4-30 | Float Lever Pivot |
| K37 | Fuel Bowl |
| 4-39 | Strainer Cage Screen |
| 4-43 | 7/16" Welch Plug |
| 4-44 | Strainer Cage Nut |
| 4A64e | Fuel Adjusting Screw |
| 2-65 | Adjustment Retainer |
| 2-66 | Retainer Screws (2 used in Carburetor) |
| 6-68f | Throttle Stop Pin |
| 2-154 | Disc Staple |
| 4K155e | Choke Shaft |
| 157f | Choke Lever Pin |
| 5K159eb | Choke Lever |
| B176 | Throttle Bearing Bushing (2 used in Throttle Tube) |
| 40K191 | Fuel Orifice |
| A198 | Needle Valve Spring |
| K199 | Needle Valve |
| A204e | Throttle Dust Washer |
| A212 | Fuel Control to Fuel Bowl Screw |
| A212 | Fuel Bowl Screws (4 used in Fuel Bowl) |
| A212 | Air Horn Screws (4 used in Air Horn) |
| A215 | Fuel Bowl Screw Lockwashers (4 used in Fuel Bowl) |
| A215 | Air Horn Screw Lockwashers (4 used in Air Horn) |
| 4-220 | Screw Plugs (2 used in Fuel Control) |
| 238 | Choke Lever Friction Screw |
| 304 | 3/8" Welch Plug |
| K305 | Nozzle Passage Bushing |
| 361 | Throttle Shaft Screws (2 used in Throttle Tube) |

| Part No. | Description |
|---|---|
| 365 | Drain Filter Body |
| 366 | Drain Filter Felt |
| 368 | Drain Filter Ring |
| 385 | 1/4" Welch Plugs (4 used in Throttle Tube) |
| 387c | Idle Adjustment Screw |
| 5K396e | Friction Screw Washer - Large |
| B398 | Friction Screw Washer - Small #10 |
| 5K399e | Friction Screw Spacer |
| B400 | Choke Lever Friction Spring |
| 4K410e | Air Horn |
| 4K411 | Air Horn Gasket |
| 5K412 | Fuel Bowl Gasket |
| 453 | Drain Filter Screen |
| 4630 | Throttle Stop Adjusting Screw |
| 4632 | Throttle Disc |
| BLEEDS: | |
| 3L70 | "L" Bleed Screw |
| 4M40 | "M" Bleed Screw |
| 4SW52 | "SW" Bleed Screw |
| 4W58 | "W" Bleed Screw |
| ASSEMBLIES: | |
| 5K612e | Fuel Bowl Assembly |
| 621 | Drain Cock |
| 5A627e | Strainer Cage Assembly |
| 4K632eb | Air Horn Assembly |
| 4K637e | Choke Shaft & Stop Lever Assembly |
| 5A646e | Cork Float Assembly |
| 5A647e | Float Valve Assembly |
| 665b | Drain Filter Assembly |
| 671 | Drain Filter Wire Screen Assembly |
| 4700 | Throttle Tube Assembly |
| 4701 | Throttle Shaft & Stop Lever Assembly |
| 4702 | Fuel Control Assembly |
| 4962 | Throttle Stop Lever Assembly |

NUMBERS SHOWN ARE MANUFACTURERS, NOT "CATERPILLAR" PART NUMBERS, EXCEPT WHEN SPECIFIED.

# ENSIGN NATURAL GAS PRESSURE REGULATOR 1" x ¾"

**Manufacturer**
**ENSIGN CARBURETOR CO., LTD.**
**7010 S. Alameda St. or 450 East Ohio St.**
**Huntington Park, Calif. Chicago, Ill.**

**For Parts Service on this Regulator, Order from the Manufacturer or his Representative**

Form 1736 Printed in U.S.A. Issue 1 8-1-35

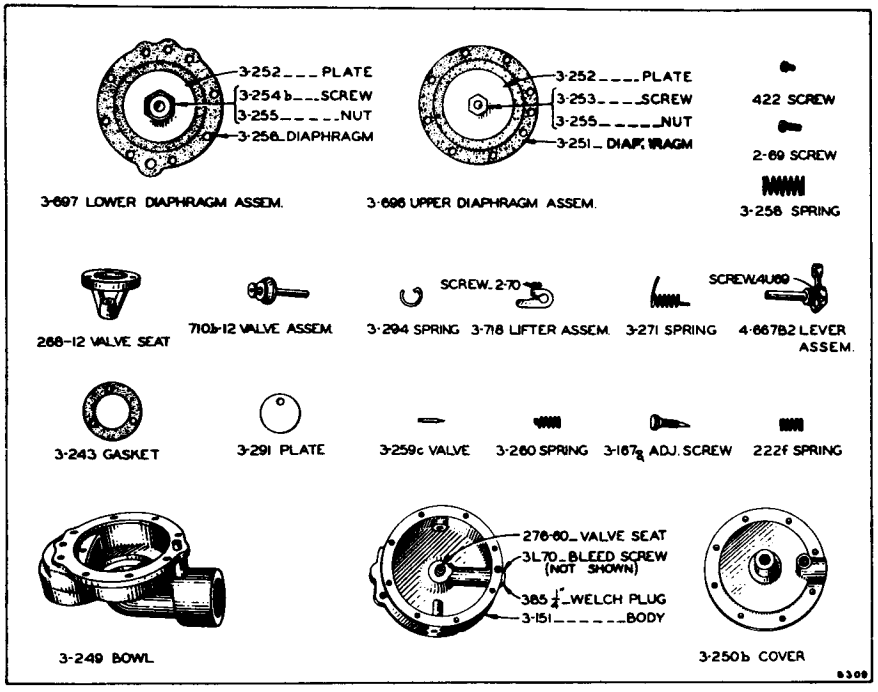


"CATERPILLAR" No. 2B2276

NUMBERS SHOWN ARE MANUFACTURERS, NOT "CATERPILLAR" PART NUMBERS, EXCEPT WHEN SPECIFIED.

Form 1736 Printed in U.S.A. Issue 1 8-1-35

# BOSCH GENERATOR RJF $\frac{75}{6}$ 900 RS 606

**Manufacturer**
**UNITED AMERICAN BOSCH CORPORATION**
**Springfield, Massachusetts**

**For Parts Service on this Generator, Order from the Manufacturer or his Representative**

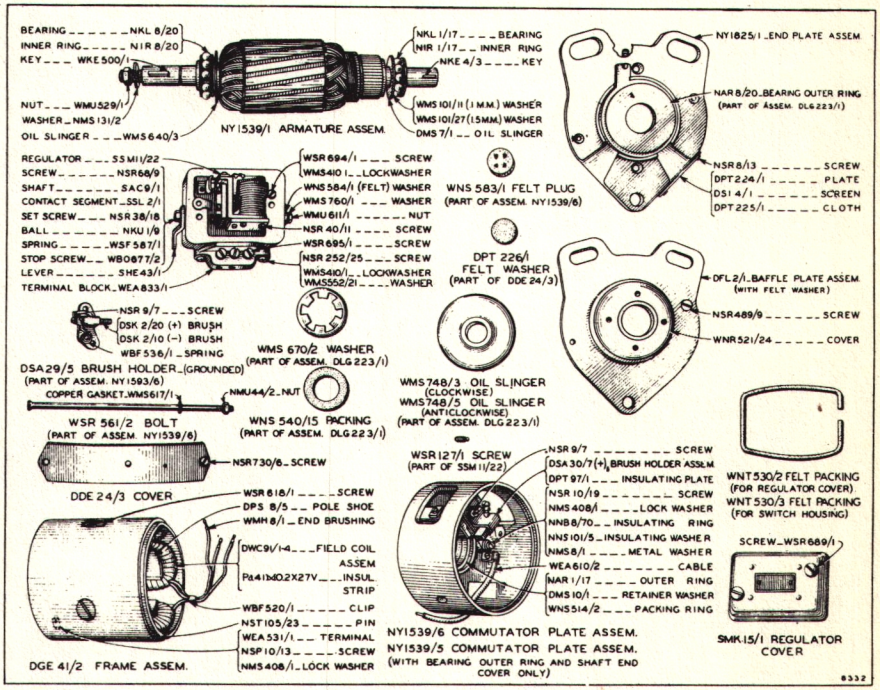


**CATERPILLAR No. 3B754**

NUMBERS SHOWN ARE MANUFACTURERS, NOT "CATERPILLAR" PART NUMBERS, EXCEPT WHEN SPECIFIED.

# ENSIGN CARBURETOR—TYPE Keba 1¼"

Manufacturer
ENSIGN CARBURETOR CO., LTD.
7010 S. Alameda St. or 450 East Ohio St.
Huntington Park, Calif. Chicago, Ill.

For Parts Service on this Carburetor, Order from the Manufacturer or his Representative

Form 1736 Printed in U.S.A. Issue 1 8-1-35

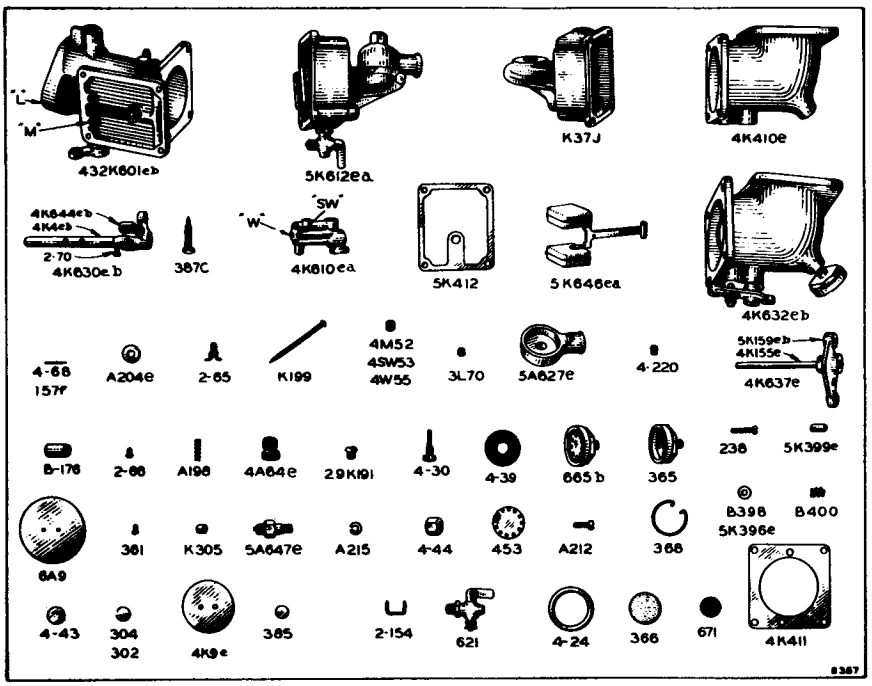


CATERPILLAR No. 2A2049

See list of parts on back of page.

NUMBERS SHOWN ARE MANUFACTURERS, NOT "CATERPILLAR" PART NUMBERS, EXCEPT WHEN SPECIFIED.

| Part No. | Description |
|---|---|
| 4K4eb | Throttle Shaft |
| 4K9e | Throttle Disc |
| 6A9 | Choke Disc |
| 4-24 | Strainer Cage Gasket |
| 4-30 | Float Lever Pivot |
| K37J | Fuel Bowl |
| 4-39 | Strainer Cage Screen |
| 4-43 | 7/16" Welch Plug |
| 4-44 | Strainer Cage Nut |
| 4A64e | Fuel Adjusting Screw |
| 2-65 | Adjustment Retainer |
| 2-66 | Retainer Screws (2 used in Throttle Tube) |
| 4-68 | Throttle Stop Pin |
| 2-70 | Throttle Stop Adjusting Screw |
| 2-154 | Disc Staple |
| 4K155e | Choke Shaft |
| 157f | Choke Lever Pin |
| 5K159eb | Choke Lever |
| B176 | Throttle Bearing Bushings (2 used in Throttle Tube) |
| 29K191 | Fuel Orifice |
| A198 | Needle Valve Spring |
| K199 | Needle Valve |
| A204e | Throttle Dust Washer |
| A212 | Fuel Control to Fuel Bowl Screw |
| A212 | Fuel Bowl Screws (4 used in Fuel Bowl) |
| A212 | Air Horn Screws (4 used in Air Horn) |
| A215 | Fuel Bowl Screw Lockwashers (4 used in Fuel Bowl) |
| A215 | Air Horn Screw Lockwashers (4 used in Air Horn) |
| 4-220 | Screw Plug (2 used in Fuel Control) |
| 238 | Choke Lever Friction Screw |
| 302 | 3/16" Welch Plug (2 used in Throttle Tube) |
| 304 | 3/8" Welch Plug |
| K305 | Nozzle Passage Bushing |

| Part No. | Description |
|---|---|
| 361 | Throttle Shaft Screws (2 used in Throttle Tube) |
| 365 | Drain Filter Body |
| 366 | Drain Filter Felt |
| 368 | Drain Filter Ring |
| 385 | 1/4" Welch Plug (4 used in Throttle Tube) |
| 387c | Idle Adjustment Screw |
| 5K396e | Friction Screw Washer - Large |
| B398 | Friction Screw Washer - Small No. 10 |
| 5K399e | Friction Screw Spacer |
| B400 | Choke Lever Friction Spring |
| 4K410e | Air Horn |
| 4K411 | Air Horn Gasket |
| 5K412 | Fuel Bowl Gasket |
| 453 | Drain Filter Screen |

BLEEDS: (See cut for location)

| | |
|---|---|
| 3L70 | "L" Bleed Screw |
| 4SW53 | "SW" Bleed Screw |
| 4W55 | "W" Bleed Screw |
| 4M52 | "M" Bleed Screw |

ASSEMBLIES:

| | |
|---|---|
| 432K601eb | Throttle Tube Assembly |
| 4K610ea | Fuel Control Assembly |
| 5K612ea | Fuel Bowl Assembly |
| 621 | Drain Cock |
| 5A627e | Strainer Cage Assembly |
| 4K630eb | Throttle Shaft and Stop Lever Assembly |
| 4K632eb | Air Horn Assembly |
| 4K637e | Choke Shaft and Stop Lever Assembly |
| 4K644eb | Throttle Stop Lever Assembly |
| 5K646ea | Metal Float Assembly |
| 5A647e | Float Valve Assembly |
| 665b | Drain Filter Assembly |
| 671 | Drain Filter Wire Screen Assembly |

Numbers shown are Manufacturers, not "Caterpillar" Part Numbers, except when specified.

# ENSIGN CARBURETOR—TYPE Keda 1¼"

Manufacturer
ENSIGN CARBURETOR CO., LTD.
7010 S. Alameda St. or 450 East Ohio St.
Huntington Park, Calif. Chicago, Ill.

For Parts Service on this Carburetor, order from the Manufacturer or his Representative

Form 1786 Printed in U.S.A. Issue 1 12-1-35

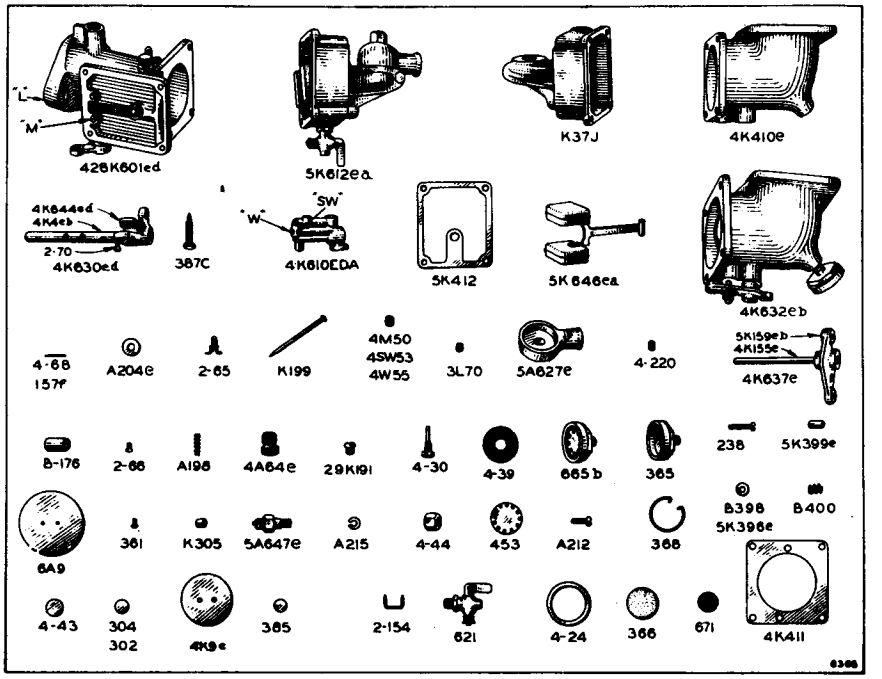


CATERPILLAR NO. 2B3413

(See list of parts on back of page)

NUMBERS SHOWN ARE MANUFACTURERS, NOT "CATERPILLAR" PART NUMBERS, EXCEPT WHEN SPECIFIED.

| Part No. | Description |
|---|---|
| 4K4eb | Throttle shaft |
| 4K9e | Throttle disc |
| 6A9 | Choke disc |
| 4-24 | Strainer cage gasket |
| 4-30 | Float lever pivot |
| K37J | Fuel bowl |
| 4-39 | Strainer cage screen |
| 4-43 | 7/16" Welch plug |
| 4-44 | Strainer cage nut |
| 4A64e | Fuel adjusting screw |
| 2-65 | Adjustment retainer |
| 2-66 | Retainer screws (2 used in throttle tube) |
| 4-68 | Throttle stop pin |
| 2-70 | Throttle stop adjusting screw |
| 2-154 | Disc staple |
| 4K155e | Choke shaft |
| 157f | Choke lever pin |
| 5K159eb | Choke lever |
| B176 | Throttle bearing bushings (2 used in throttle tube) |
| 29K191 | Fuel orifice |
| A198 | Needle valve spring |
| K199 | Needle valve |
| A204e | Throttle dust washer |
| A212 | Fuel control to fuel bowl screw |
| A212 | Fuel bowl screws (4 used in fuel bowl) |
| A212 | Air horn screws (4 used in air horn) |
| A215 | Fuel bowl screw lockwashers (4 used in fuel bowl) |
| A215 | Air horn screw lockwashers (4 used in air horn) |
| 4-220 | Screw plug (2 used in fuel control) |
| 238 | Choke lever friction screw |
| 302 | 3/16" Welch plug (2 used in throttle tube) |
| 304 | 3/8" Welch plug |
| K305 | Nozzle passage bushing |

| Part No. | Description |
|---|---|
| 361 | Throttle Shaft screws (2 used in throttle tube) |
| 365 | Drain filter body |
| 366 | Drain filter felt |
| 368 | Drain filter ring |
| 385 | 1/4" Welch plug (4 used in throttle tube) |
| 387c | Idling adjustment screw |
| 5K396e | Friction screw washer - large |
| B398 | Friction screw washer - small, No.10 |
| 5K399e | Friction screw spacer |
| B400 | Choke lever friction spring |
| 4K410e | Air horn |
| 4K411 | Air horn gasket |
| 5K412 | Fuel bowl gasket |
| 453 | Drain filter screen |

BLEEDS: (See cut for location)

| | |
|---|---|
| 3L70 | "L" Bleed screw |
| 4M50 | "M" Bleed screw |
| 4SW53 | "SW" Bleed screw |
| 4W55 | "W" Bleed screw |

ASSEMBLIES:

| | |
|---|---|
| 428K601ed | Throttle tube assembly |
| 4K610EdA | Fuel control assembly |
| 5K612ea | Fuel bowl assembly |
| 621 | Drain cock |
| 5A627e | Strainer cage assembly |
| 4K630ed | Throttle shaft and stop lever assembly |
| 4K632eb | Air horn assembly |
| 4K637e | Choke shaft and stop lever assembly |
| 4K644ed | Throttle stop lever assembly |
| 5K646ea | Metal float assembly |
| 5A647e | Float valve assembly |
| 665b | Drain filter assembly |
| 671 | Drain filter wire screen assembly |

NUMBERS SHOWN ARE MANUFACTURERS, NOT "CATERPILLAR" PART NUMBERS, EXCEPT WHEN SPECIFIED.

# ENSIGN CARBURETOR—TYPE Ked 1½"

Manufacturer
ENSIGN CARBURETOR CO., LTD.
7010 S. Alameda St. or 450 East Ohio St.
Huntington Park, Calif. Chicago, Ill.

For Parts Service on this Carburetor, order from the Manufacturer or his Representative

Form 1736 Printed in U.S.A. Issue 1 1-1-36

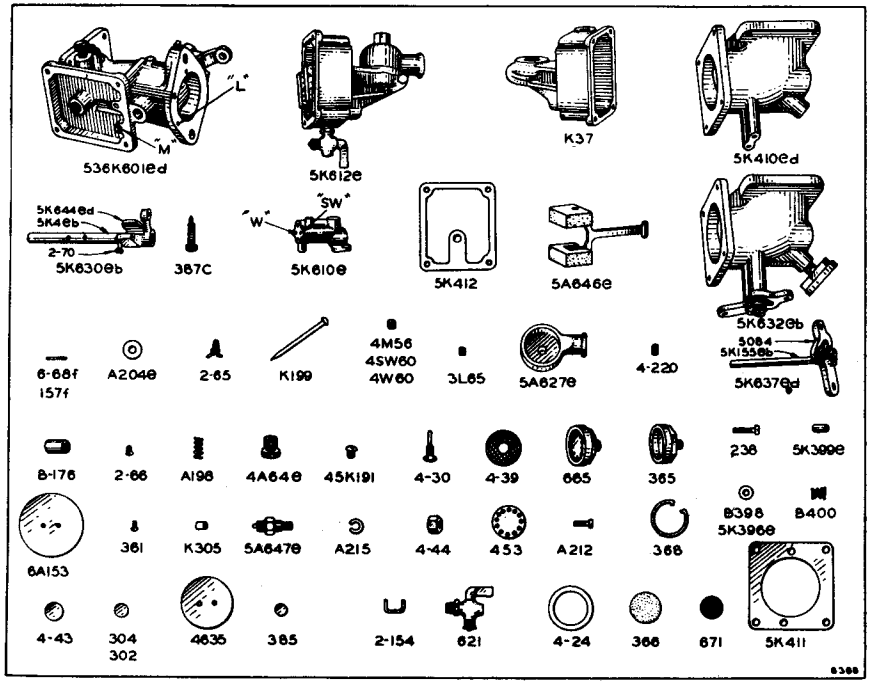


CATERPILLAR NO. 2B8062
(THROTTLE SHAFT OFFSET 3/32")

CATERPILLAR NO. 2B4540
(THROTTLE SHAFT OFFSET 1/32")

(See list of parts on back of page)

NUMBERS SHOWN ARE MANUFACTURERS, NOT "CATERPILLAR" PART NUMBERS, EXCEPT WHEN SPECIFIED.

| Part No. | Description |
|---|---|
| 5K4eb | Throttle Shaft |
| 4-24 | Strainer Cage Gasket |
| 4-30 | Float Lever Pivot |
| K37 | Fuel Bowl |
| 4-39 | Strainer Cage Screen |
| 4-43 | 7/16" Welch Plug |
| 4-44 | Strainer Cage Nut |
| 4A64e | Fuel Adjusting Screw |
| 2-65 | Adjustment Retainer |
| 2-66 | Retainer Screws (2) |
| 6-68f | Throttle Stop Pin |
| 2-70 | Throttle Stop Adjusting Screw |
| 6A153 | Choke Disc |
| 2-154 | Disc Staple |
| 5K155eb | Choke Shaft |
| 157f | Choke Lever Pin |
| 5084 | Choke Lever (Double-end) |
| B176 | Throttle Bearing Bushings (2) |
| 45K191 | Fuel Orifice |
| A198 | Needle Valve Spring |
| K199 | Needle Valve |
| A204e | Throttle Dust Washer |
| A212 | Fuel Control to Fuel Bowl Screw |
| A212 | Air Horn Screws (4 used in Air Horn) |
| A212 | Fuel Bowl Screws (4 used in Fuel Bowl) |
| A215 | Fuel Bowl Screw Lockwashers (4 used in Fuel Bowl) |
| A215 | Air Horn Screw Lockwashers (4 used in Air Horn) |
| 4-220 | Screw Plugs (2) |
| 238 | Choke Lever Friction Screw |
| 302 | 3/16" Welch Plugs (4) |
| 304 | 3/8" Welch Plug |
| K305 | Nozzle Passage Bushing |
| 361 | Throttle Shaft Screws (2) |
| 365 | Drain Filter Body |
| 366 | Drain Filter Felt |
| 368 | Drain Filter Ring |
| 385 | 1/4" Welch Plugs (5) |
| 387c | Idling Adjustment Screw |
| 5K396e | Friction Screw Washer-Large |
| B398 | Friction Screw Washer-Small #10 |
| 5K399e | Friction Screw Spacer |
| B400 | Choke Lever Friction Spring |
| 5K410ed | Air Horn |
| 5K411 | Air Horn Gasket |
| 5K412 | Fuel Bowl Gasket |
| 453 | Drain Filter Screen |
| 4635 | Throttle Disc |
| **BLEEDS:** | |
| 3L65 | "L" Bleed Screw |
| 4M56 | "M" Bleed Screw |
| 4SW60 | "SW" Bleed Screw |
| 4W60 | "W" Bleed Screw |
| **ASSEMBLIES:** | |
| 536K601ed | Throttle Tube Assembly |
| 5K610e | Fuel Control Assembly |
| 5K612e | Fuel Bowl Assembly |
| 621 | Drain Cock |
| 5A627e | Strainer Cage Assembly |
| 5K630eb | Throttle Shaft & Stop Lever Assembly |
| 5K632eb | Air Horn Assembly |
| 5K637ed | Choke Shaft & Lever Assembly |
| 5K644ed | Throttle Stop Lever Assembly |
| 5A646e | Cork Float Assembly |
| 5A647e | Float Valve Assembly |
| 665b | Drain Filter Assembly |
| 671 | Drain Filter Wire Screen Assembly |

NUMBERS SHOWN ARE MANUFACTURERS, NOT "CATERPILLAR" PART NUMBERS, EXCEPT WHEN SPECIFIED.

# AC COMPANY FUEL PUMP No. 1522205

Manufacturer
A C SPARK PLUG COMPANY
Flint, Michigan

For Parts Service on this Fuel Pump, Order from the United Motors Service Corp. or their Representative

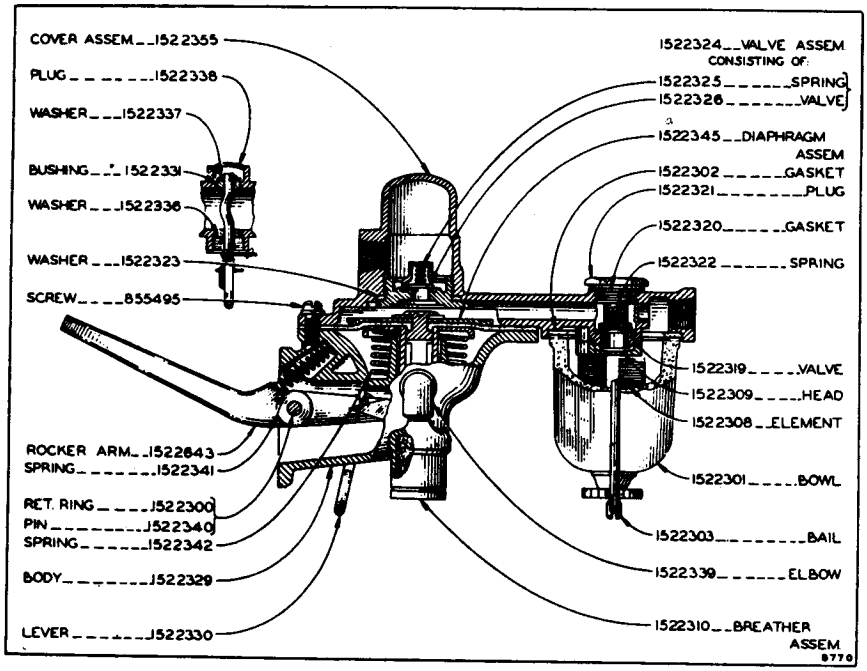


CATERPILLAR NO. 3B179

NUMBERS SHOWN ARE MANUFACTURERS, NOT "CATERPILLAR" PART NUMBERS, EXCEPT WHEN SPECIFIED.

Form 1736 Printed in U.S.A. Issue 1 3-1-36

# DONALDSON AIR CLEANER MODEL B650

Manufacturer
DONALDSON COMPANY, Inc.
666 Pelham Street
Saint Paul, Minn.

For Parts Service on this Air Cleaner, Order from the Caterpillar Tractor Co., Peoria, Ill.

Form 1736 Printed in U.S.A. Issue 1 8-1-35

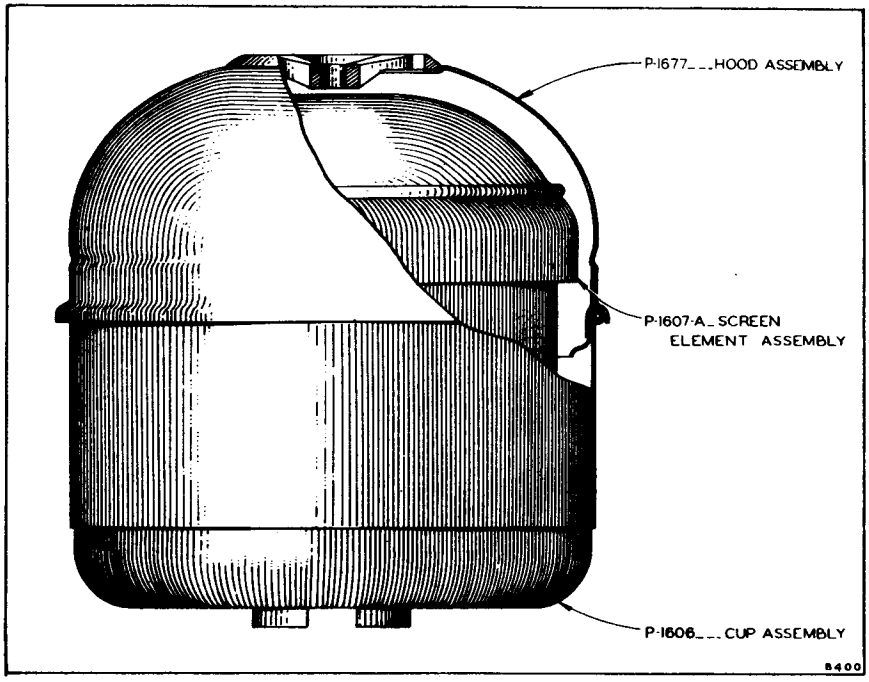


**CATERPILLAR No. 3B726**

**NUMBERS SHOWN ARE MANUFACTURERS, NOT "CATERPILLAR" PART NUMBERS, EXCEPT WHEN SPECIFIED.**

# ZENITH CARBURETOR—TYPE K5A 1¼"

Manufacturer
ZENITH CARBURETOR CO.
696 Hart Avenue
Detroit, Michigan

For Parts Service on this Carburetor, Order from the Manufacturer or his Representative

Form 1736 Printed in U.S.A. Issue 1 8-1-35

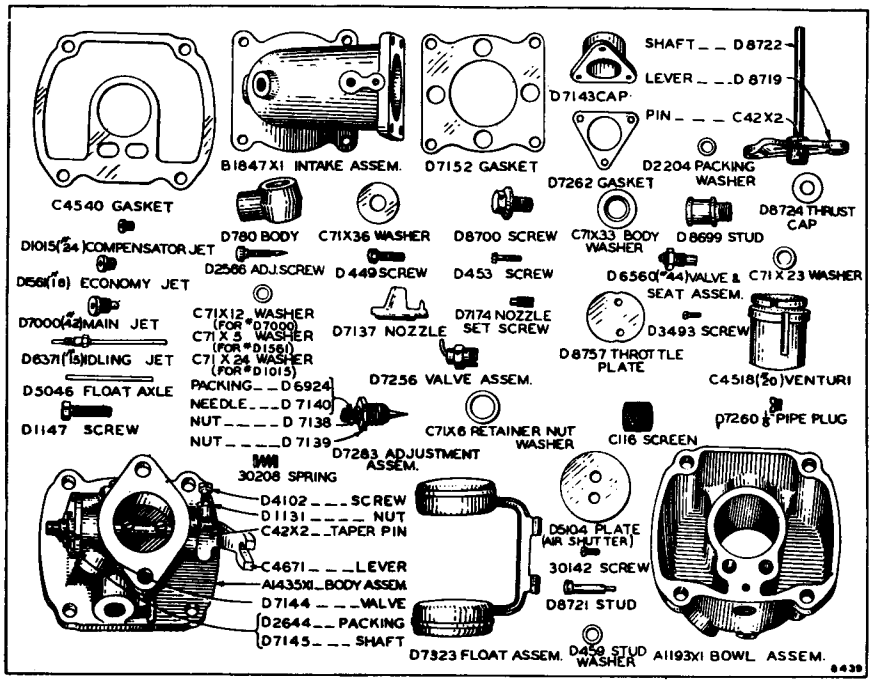


## CATERPILLAR No. 2B7590

## (For Alcohol)

**NUMBERS SHOWN ARE MANUFACTURERS, NOT "CATERPILLAR" PART NUMBERS, EXCEPT WHEN SPECIFIED.**

# ANTI-FRICTION BEARINGS

This List Has Been Made to Provide a Cross-Reference Between Manufacturer's No. and the Caterpillar Part No.

Remove issue 7 and insert this in its place.

Form 1736 Printed in U.S.A. Issue 8 - 3-1-1943

## BANTAM

| MAKER'S NUMBER | CATERPILLAR NUMBER |
|---|---|
| Kalsomine | 1B4150 |
| Kraal | B-460 |
| Ladder | 1B4150 |
| Lavish | B-460 |
| Maiden | B-529 |
| Mica | 1B4340 |
| Milk | 2952-A |
| Oily | 166385 |
| Olien | AM-3497 |
| Onion | 165904 |

## B.C.A.

| MAKER'S NUMBER | CATERPILLAR NUMBER |
|---|---|
| 208-AC | 1B4098 |
| 209-AC | 1B4099 |
| 209 | 4B3665 |
| 210-AC | 1B4100 |
| 212-AC | 1B4101 |
| 214-AC | 1B4102 |
| 215-AC | 1B4103 |
| 7208 | 1B4098 |
| 7209 | 1B4099 |
| 7210 | 1B4100 |
| 7211 | 2B9338 |
| 7212-E | 1B4101 |
| 7214-E | 1B4102 |
| 7215-E | 1B4103 |
| 7219 | 1B6574 |

## BOCK-CONE

| MAKER'S NUMBER | CATERPILLAR NUMBER |
|---|---|
| 6358-R | 1B4049 |
| 6552-R | 1B4052 |

## BOCK-CUP

| MAKER'S NUMBER | CATERPILLAR NUMBER |
|---|---|
| 6320 | 1B4050 |
| 6510 | 1B4053 |

## FAFNIR

| MAKER'S NUMBER | CATERPILLAR NUMBER |
|---|---|
| 34 | 3B7205 |
| 38-KDD | 4B3191 |
| 38-T | 4B7094 |
| 39-W | 1B6634 |
| 200-DD | 4B2862 |
| 200-K | 1B5737 |
| 200-TT | 4B7095 |
| 200-W | 1B5737 |
| 202-K | 6B926 |
| 203-K | 6B924 |
| 203-KD | 2B2953 |
| 203-KDD | 3B4128 |
| 204-KLL-2 | 3B2084 |
| 204-W | 1B4106 |
| 205-K | 6B1124 |
| 205-W | 1B4107 |
| 205-WD | 1B4143 |
| 206-W | 1B4108 |
| 206-WG | 8B8297 |
| L-206 | 7B3291 |
| 207-W | 1B4109 |
| 207-WD | 8B8774 |
| 207-WG | 8B7622 |
| 208-W | 1B4110 |
| 208-WD | 3B4177 |
| 209-K | 4B3665 |
| 209-W | 1B4111 |

## FAFNIR

| MAKER'S NUMBER | CATERPILLAR NUMBER |
|---|---|
| 209-WDD | 8B7946 |
| 210-K | 7B3812 |
| 210-W | 1B4076 |
| 210-WDD | 8B7624 |
| 210-WG | 8B7176 |
| 211-W | 1B7617 |
| 212-KD | 9B2635 |
| 212-W | 1B4112 |
| 212-WDD | 8B7174 |
| 213-W | 1B4113 |
| 213-WD | 4B8070 |
| 214-K | 7B7515 |
| 215-W | 1B4077 |
| 215-WD | 2B8686 |
| 216-W | 165879 |
| 218-W | 7B3140 |
| 220-W | 5B8061 |
| 300-KD | 2A4943 |
| 303-W | 1B4114 |
| 304-W | 1B5388 |
| H-304-W | 6B7645 |
| H-304-WL | 6B7734 |
| 305-W | 1B4115 |
| 305-WD | 1B5387 |
| 306-W | 1B4116 |
| 306-WD | 1B4142 |
| 307-W | 1B4117 |
| 307-WD | 8B8487 |
| 307-WDD | 3B3654 |
| 308-W | 1B4118 |
| 308-WDD | 3B3653 |
| 309-K | 8B5972 |
| 309-KDG | 9B2630 |
| 309-W | 1B4119 |
| 309-WG | 8B8299 |
| 309-WDD | 3B3652 |
| 310-K | 8B5961 |
| 310-S | 2B3456 |
| 310-W | 1B4120 |
| 310-WDD | 3B3645 |
| 311-W | 1B4121 |
| 311-WDD | 3B3648 |
| 312-W | 1B4122 |
| 312-WDD | 3B3651 |
| 313-W | 1B4123 |
| 313-WDD | 3B3650 |
| 314-W | 1B4136 |
| 315-W | 166487 |
| 316-W | 1B4124 |
| 316-WDD | 3B3649 |
| 318-W | 9B298 |
| 320-W | 1B6571 |
| 320-W-3 | 5B8301 |
| 320-WDD-2 | 3B1364 |
| 404-W | 1B4125 |
| 405-W | 1B4126 |
| 406-W | 1B4127 |
| 407-W | 1B4128 |
| 408-BT | S-1146 |
| 408-W | 1B4129 |
| 408-WDD-2 | 3B3647 |
| 409-W | 1B4130 |
| 410-W | 1B4137 |
| 412-W | 1B4138 |
| 412-W-2 | 5B8302 |
| 412-WDD-2 | 3B3646 |
| 413-W | 1B4131 |
| 413-W-2 | 5B8300 |
| 413-WDD-2 | 3B1365 |
| 1503-AS | 2A4725 |
| 1504-AS | 7B5353 |
| 1505-S | 6B7267 |
| 1509-S | 2A4110 |
| N-1804 | 2A4521 |
| N-1805 | 2B2024 |
| 5206-D | 8B8298 |
| 5207-N | 1B4720 |
| 5209 | 1B5675 |
| 5210 | 8B8296 |
| 5213 | 3B1316 |
| 5303 | 1B4139 |

## FAFNIR

| MAKER'S NUMBER | CATERPILLAR NUMBER |
|---|---|
| 5304 | 1B4140 |
| 5305 | 2B2887 |
| 5306 | 1B4092 |
| P5306-D | 5B5257 |
| 5307 | 1B7615 |
| P5307-D | 3B2288 |
| 5308 | 1B7867 |
| 5309 | 1B7616 |
| P5309-D | 4B4728 |
| 5310 | 8B7625 |
| 5311 | 1B4132 |
| 5312 | 1B4135 |
| 5313 | 1B4133 |
| 5314 | 9B141 |
| 5317 | 3B5529 |
| 5318 | 9B647 |
| 5407 | 1B4087 |
| 6304-N | 1B4140 |
| 6311-N | 1B4132 |
| L-6311 | 1B4068 |
| L-6312 | 2B8252 |
| L-6314 | 1B5386 |
| L-6317 | 3B2626 |
| 7205-W | 1B4372 |
| 7209 | 52439 |
| 7209-W | 1B4099 |
| 7210-W | 1B4100 |
| 7211 | 165793 |
| 7212-W | 1B4101 |
| 7214-W | 1B4102 |
| 7215-W | 1B4103 |
| 7219-W | 1B6574 |
| 7306-W | 1B5385 |
| 7309-W | 12180 |

## GURNEY

| MAKER'S NUMBER | CATERPILLAR NUMBER |
|---|---|
| 203-C | 1B6422 |
| 206-R | 1B4108 |
| 207-R | 1B4109 |
| 208-R | 1B4110 |
| 209-R | 1B4111 |
| 210-R | 1B4076 |
| 211-R | 1B7617 |
| 212-R | 1B4112 |
| 213-R | 1B4113 |
| 215-R | 1B4077 |
| 216-R | 165879 |
| 219-R | 1B6574 |
| 305-R | 1B4069 |
| 306-R | 1B4116 |
| 307-R | 1B4117 |
| 308-R | 1B4118 |
| 309-R | 1B4119 |
| 310-R | 1B4120 |
| 311-R | 1B4121 |
| 312-R | 165041 |
| 313-R | 1B4123 |
| 314-R | 1B4136 |
| 315-R | 166487 |
| 316-R | 1B4124 |
| 404-R | 1B4125 |
| 405-R | 1B4126 |
| 406-R | 1B4127 |
| 407-R | 1B4128 |
| 408-R | 1B4129 |
| 410-R | 1B4137 |
| 413-R | 1B4131 |
| 5313 | 1B4133 |
| 7209 | 52439 |
| 7211 | 165793 |
| 7212 | 1B4101 |
| 7214 | 1B4102 |
| 7309 | 12180 |
| 7407 | 14755 |

## HESS-BRIGHT

| MAKER'S NUMBER | CATERPILLAR NUMBER |
|---|---|
| 203 | 1B6422 |
| 904 | 164073 |
| 1104-F | 164073 |
| 1106-F | 164092 |
| 5207 | 1B4097 |

## NORMA HOFFMAN

| MAKER'S NUMBER | CATERPILLAR NUMBER |
|---|---|
| EW 7/8" | 1B4146 |
| D1 17 | 4B3531 |

# ANTI-FRICTION BEARINGS—Continued

## HYATT

| COMPLETE BEARING | | ROLLER ASSEMBLY | | OUTER RACE | | INNER RACE | |
|---|---|---|---|---|---|---|---|
| MAKER'S NUMBER | CATERPILLAR NUMBER | MAKER'S NUMBER | CATERPILLAR NUMBER | MAKER'S NUMBER | CATERPILLAR NUMBER | MAKER'S NUMBER | CATERPILLAR NUMBER |
| D | AM-1548 | | | | | | |
| E & F | AM-1547 | | | | | | |
| H | AM-1550 | | | | | | |
| J | AM-1551 | | | | | | |
| | 2B2709 | 93316 | 3B4478 | OR-31253 | 2B2708 | | |
| 206 | 52442 | RA-206 | 2A2806 | OR-206 | 1B3700 | IR-206 | 1B3701 |
| C-206 | 186456 | RA-206 | 2A2806 | OR-206 | 1B3700 | | |
| 207 | 166489 | RA-207 | 1B3702 | OR-207 | 1B3850 | IR-207 | 1B3704 |
| SP-207 | S-2301 | RA-207 | 1B3702 | OR-207-CT | 1B3703 | IR-207 | 1B3704 |
| C-209 | 1B4368 | RA-209 | 1B4369 | OR-209 | 1B4370 | | |
| C-210 | 1B3705 | RA-210 | 1B3706 | OR-210 | 1B3707 | | |
| CW-210 | 2B6975 | RAW-210 | 2B6976 | ORW-210 | 2B6977 | | |
| 211 | 172140 | RA-211 | 1B3708 | OR-211 | 1B3709 | IR-211 | 1B3710 |
| C-211 | 1B3711 | RA-211 | 1B3708 | OR-211 | 1B3709 | | |
| CW-211 | 3B2597 | WRA-211 | 3B3970 | WOR-211 | 3B3971 | | |
| C-212 | 1B6478 | RA-212 | 1B6519 | OR-212 | 1B6520 | | |
| 213 | 166485 | RA-213 | 1B3713 | OR-213 | 1B3714 | IR-213 | 1B3853 |
| C-213 | 1B3712 | RA-213 | 1B3713 | OR-213 | 1B3714 | | |
| CD-214 | 2B7926 | RAW-214 | 2B7925 | ORD-214 | 2B7923 | | |
| CW-214 | 2B7927 | RAW-214 | 2B7925 | ORW-214 | 2B7924 | | |
| C-215 | 52411 | RA-215 | 52415 | OR-215 | 52414 | | |
| C-216 | 3B3547 | RA-216 | 3B3562 | OR-216 | 3B3563 | | |
| 218 | 2B3182 | RA-218 | 2B3587 | OR-218 | 2B3586 | IR-218 | 2B3585 |
| C-305 | 1B3715 | RA-305 | 1B3716 | OR-305 | 1B3717 | | |
| 306 | 1B3718 | RA-306 | 1B3719 | OR-306 | 1B3720 | IR-306 | 1B3721 |
| C-306 | 1B4371 | RA-306 | 1B3719 | OR-306 | 1B3720 | | |
| C-307 | 1B3722 | RA-307 | 1B3723 | OR-307 | 1B3724 | | |
| C-308 | 1B3725 | RA-308 | 1B3726 | OR-308 | 1B3727 | | |
| C-309 | 52541 | RA-309 | 52366 | OR-309 | 52365 | | |
| C-310 | 1B3728 | RA-310 | 1B3729 | OR-310 | 1B3730 | | |
| 311 | 165245 | RA-311 | 19485 | OR-311 | 19486 | IR-311 | 19487 |
| C-311 | 1B3731 | RA-311 | 19485 | OR-311 | 19486 | | |
| 312 | 166486 | RA-312 | 52361 | OR-312 | 52412 | IR-312 | 52360 |
| C-312 | 52410 | RA-312 | 52361 | OR-312 | 52412 | | |
| 313 | 1B3733 | RA-313 | 1B3734 | OR-313 | 1B3735 | IR-313 | 1B3736 |
| E-313 | 1B3737 | RA-313 | 1B3734 | | | IR-313 | 1B3736 |
| 314 | 166496 | RA-314 | 22118 | OR-314 | 22119 | IR-314 | 58098 |
| SC-403 | 1B3738 | SRA-403 | 1B3739 | OR-403 | 1B3740 | | |
| SC-404 | 3B827 | SRA-404 | 3B828 | OR-404 | 1B3717 | | |
| SC-405 | 3B9635 | SRA-405 | 3B9636 | OR-306 | 1B3720 | | |
| ST-728 | 14405 | 04136 | 1B3741 | 33027 | 1B3742 | 30193 | 1B3743 |
| ST-770 | 19385 | WRA-217 | 19386 | 4325 | 50338 | Special | 19387 |
| | 4B3693 | 1206-TS | 4B3698 | 1206-TS | 4B3698 | A-5206 | 4B3697 |
| | | | | 1213-ZA | 7B3643 | | |
| AB-1307-TS | 2B9112 | 1307-TS | 3B3984 | 1307-TS | 3B3984 | AB-1307 | 3B3985 |
| | | | | 1307-ZA | 4B4582 | | |
| R-1308-YS | 4B3695 | 1308-YS | 4B5559 | 1308-YS | 4B5559 | R-1308 | 4B5558 |
| R-1309-YS | 3B1004 | 1309-YS | 3B3966 | 1309-YS | 3B3966 | 1309 | 3B3967 |
| | | | | 1309-ZA | 3B8860 | | |
| | | | | 1310-ZA | 3B8972 | | |
| R-1311-YS | 2B9173 | 1311-YS | 3B3968 | 1311-YS | 3B3968 | 1311 | 3B3969 |
| R-1312-YS | 6B5164 | 1312-YS | 6B5163 | 1312-YS | 6B5163 | R-1312 | 6B5162 |
| | | | | 1312-ZA | 3B8922 | | |
| | | | | 1313-ZA | 3B8859 | | |
| R-1314-YS | 6B5068 | 1314-YS | 6B5067 | 1314-YS | 6B5067 | R-1314 | 6B5069 |
| | | | | 1314-ZA | 3B8970 | | |
| | | | | 1315-ZA | 6B5153 | | |
| | | | | 1320-ZA | 3B8924 | | |
| 5206-TS | 8B6627 | | | | | | |
| 16126 | 60873 | 46853 | 52406 | 4554 | 52310 | | |
| 16373 | B-816 | 01102 | 1B3851 | 4776 | 1B3852 | 32024 | 1B3789 |
| 16462 | 1B3754 | 16982 | 1B3745 | 31130 | 1B3746 | | |
| 16639 | 1B3744 | 16982 | 1B3745 | 31130 | 1B3746 | 32060 | 1B3747 |
| 16646 | 165887 | 16990 | 1B3748 | 33009 | 1B3749 | 30382 | 122394 |
| 16647 | 165700 | 46903 | 1B3750 | 33016 | 1B3751 | 30383 | 124191 |
| 16648 | 165886 | 17551 | 1B3752 | 33011 | 1B3753 | 30384 | 124514 |
| 17036 | 14404 | 04136 | 1B3741 | 33027 | 1B3742 | | |
| 17059 | 1B3755 | 00531 | 1B3756 | 31262 | 1B3757 | | |
| 17074 | 165045 | 46903 | 1B3750 | 33016 | 1B3751 | | |
| 17136 | 1B3758 | 04136 | 1B3741 | 33027 | 1B3742 | 32075 | 1B3760 |
| 17174 | 165888 | 46903 | 1B3750 | 33016 | 1B3751 | 32064 | 1B3761 |
| 18122 | 7771 | 01076 | 52404 | 4401 | 52311 | | |
| 18122 | 60140 | 01076 | 52404 | 4401 | 52311 | | |
| 18125 | 164566 | 16962 | 1B3762 | 4430 | 1B3763 | | |
| 18150 | 1B3765 | 01078 | 1B3809 | 4425 | 1B4169 | | |
| 18195 | 3B2598 | 01173 | 3B2601 | 4431 | 3B2604 | | |
| 18220 | 1B3844 | 17927 | 60218 | 4432 | 1B3846 | | |
| 18250 | B-943 | 01177 | 1B3854 | 4456 | 1B3855 | | |
| 18260 | 60121 | 01180 | 1B3764 | 4554 | 52310 | | |
| 18267 | 164567 | 01181 | 1B3790 | 4409 | 1B3791 | | |
| 18297 | 1B3766 | 01129 | 1B3767 | 4796 | 1B3768 | | |
| 18335 | 160549 | 01192 | 1B3856 | 4600 | 1B3857 | | |

# ANTI-FRICTION BEARINGS—Continued

Remove issue 7 and insert this in its place.

Form 1736 Printed in U.S.A. Issue 8 3-1-1943

## HYATT

| COMPLETE BEARING | | ROLLER ASSEMBLY | | OUTER RACE | | INNER RACE | |
|---|---|---|---|---|---|---|---|
| MAKER'S NUMBER | CATERPILLAR NUMBER | MAKER'S NUMBER | CATERPILLAR NUMBER | MAKER'S NUMBER | CATERPILLAR NUMBER | MAKER'S NUMBER | CATERPILLAR NUMBER |
| 19092 | 164569 | 16872 | 1B3769 | 4122 | 1B3770 | | |
| 19102 | 164568 | 16882 | 1B3771 | 4123 | 1B3772 | | |
| 19195 | 1B3773 | 17584 | 1B3774 | 4434 | 1B3775 | | |
| 19205 | 7768 | 16812 | 52368 | 4503 | 50335 | | |
| 19335 | AM-1549 | 04309 | 1B3776 | 4601 | 1B3777 | | |
| 19410 | AM-1046 | 04320 | 1B3778 | 4607 | 1B3779 | | |
| 26630 | 13428 | 02098 | 52384 | 35049 | 52383 | 32026 | 52382 |
| 26632 | 7770 | 02133 | 52377 | 31132 | 50337 | 30318 | 52375 |
| 26662 | 50021 | 27572 | 1B3780 | 35047 | 1B3781 | 30309 | 111804 |
| 26662 | 165047 | 27572 | 1B3780 | 35047 | 1B3781 | 30309 | 111804 |
| C-26662 | 165043 | 27572 | 1B3780 | 35047 | 1B3781 | | |
| 27116 | 165050 | 27928 | 165634 | 33007 | 122252 | 32055 | 122253 |
| 27118 | 165955 | 46990 | 1B3748 | 33009 | 1B3749 | 32057 | 1B3783 |
| 27123 | B-489 | 27591 | 1B3858 | 33015 | 50341 | 32013 | 1B3860 |
| 27131 | B-447 | 02100 | 1B3861 | 33023 | 50334 | 32021 | 50343 |
| 27131 | 164497 | 02100 | 1B3861 | 33023 | 50334 | 32021 | 50343 |
| 27136 | 1B3758 | 04136 | 1B3741 | 33027 | 1B3742 | 32075 | 1B3760 |
| 27168 | 164565 | 27586 | 1B3864 | 33010 | 1B3865 | 32058 | 1B3866 |
| 27173 | 1B3784 | 26903 | 1B3750 | 33016 | 1B3751 | 32014 | 1B3785 |
| 27174 | 165888 | 46903 | 1B3750 | 33016 | 1B3751 | 32064 | 1B3761 |
| 27181 | B-471 | 46904 | 52392 | 33024 | 50339 | 32022 | 1B3821 |
| 27183 | 1B3786 | 05099 | 1B3787 | 33026 | 1B3788 | 32024 | 1B3789 |
| 28125 | 164566 | 26962 | 1B3762 | 4430 | 1B3763 | | |
| 28267 | 164567 | 02181 | 1B3790 | 4409 | 1B3791 | | |
| 28345 | 1B3841 | 01090 | 1B3801 | 4468 | 1B3842 | | |
| 29092 | 164569 | 26872 | 1B3769 | 4122 | 1B3770 | | |
| 29102 | 164568 | 16882 | 1B3771 | 4123 | 1B3772 | | |
| 29195 | 1B3773 | 17584 | 1B3774 | 4434 | 1B3775 | | |
| 29565 | 165645 | 02035 | 1B3870 | 4651 | 1B3871 | | |
| 40001 | 1B3792 | 00506 | 1B3793 | 4803 | 1B3794 | 30611 | 1B3795 |
| 40002 | 1B3796 | 04329 | 1B3797 | 4804 | 1B3798 | | |
| 40003 | 1B3799 | 00506 | 1B3793 | 4803 | 1B3794 | | |
| 40004 | 1A9583 | 00538 | 1B3835 | 4811 | 1B3849 | | |
| 40006 | 1B3800 | 01090 | 1B3801 | 4806 | 1B3802 | | |
| 40007 | 1B3803 | 04010 | 1B3804 | 4807 | 1B3805 | | |
| 40520 | 164395 | 00388 | 1B3872 | 4330 | 1B3873 | 30244 | 1B3874 |
| 40566 | 1B5390 | 00376 | 1B3807 | 4301 | 1B5365 | 30247 | 1B3819 |
| 41566 | 1B3806 | 00376 | 1B3807 | 35091 | 1B3808 | 32047 | 1B3819 |
| 46126 | 60873 | 46853 | 52406 | 4554 | 52310 | | |
| 46137 | 7773 | 00515 | 52379 | 4325 | 50338 | | |
| 46138 | 15560 | 00485 | 52401 | 4766 | 50345 | | |
| 46139 | 7769 | 00508 | 52370 | 4516 | 50336 | | |
| 46142 | 166498 | 00503 | 1B3875 | 4472 | 1B3876 | | |
| 46165 | 60139 | 00512 | 52403 | 4528 | 50340 | | |
| 46326 | 7760 | 47577 | 52376 | | | 30229 | 50331 |
| 46373 | B-816 | 04102 | 1B3851 | 4776 | 1B3852 | 32024 | 1B3789 |
| 46381 | 1B3813 | 00506 | 1B3793 | 4458 | 1B3810 | 30611 | 1B3795 |
| 46409 | 7764 | 00509 | 52367 | 33023 | 50334 | | |
| 46419 | 60181 | 00504 | 52374 | 33015 | 50341 | | |
| 46426 | 1B4516 | 04110 | 1B3811 | 35044 | 1B3812 | | |
| | 167837 | 04110 | 1B3811 | 35044 | 1B3812 | 30383 | 124191 |
| 46430 | 7761 | 00513 | 52378 | 33030 | 50332 | | |
| 46431 | 7762 | 00516 | 52380 | 35055 | 50333 | | |
| 46526 | 60254 | 00510 | 14406 | 33024 | 50339 | | |
| 46630 | 13428 | 04098 | 52384 | 35049 | 52383 | 32026 | 52382 |
| 46646 | 165887 | 46990 | 1B3748 | 33009 | 1B3749 | 30382 | 122394 |
| 46647 | 165700 | 46903 | 1B3750 | 33016 | 1B3751 | 30383 | 124191 |
| 46648 | 165886 | 47551 | 1B3752 | 33011 | 1B3753 | 30384 | 124514 |
| 47036 | 14404 | 04136 | 1B3741 | 33027 | 1B3742 | | |
| 47038 | 1B3814 | 47563 | 1B3815 | 33029 | 1B3816 | | |
| 47074 | 165045 | 46903 | 1B3750 | 33016 | 1B3751 | | |
| 47118 | 165955 | 46990 | 1B3748 | 33009 | 1B3749 | 32057 | 1B3783 |
| 47123 | B-489 | 47591 | 1B3858 | 33015 | 50341 | 32013 | 1B3860 |
| 47130 | 14403 | 04050 | 52387 | 33021 | 52386 | 32069 | 52385 |
| 47131 | 60214 | 04100 | 1B3861 | 33023 | 50334 | 32021 | 50343 |
| 47136 | 1B3758 | 04136 | 1B3741 | 33027 | 1B3742 | 32075 | 1B3760 |
| 47140 | 1B3817 | 00376 | 1B3807 | 35096 | 1B3818 | 30247 | 1B3819 |
| 47173 | 1B3784 | 46903 | 1B3750 | 33016 | 1B3751 | 32014 | 1B3785 |
| 47174 | 165888 | 46903 | 1B3750 | 33016 | 1B3751 | 32064 | 1B3761 |
| 47181 | 1B3820 | 46904 | 52392 | 33024 | 50339 | 32022 | 1B3821 |
| 47182 | 12192 | 46904 | 52392 | 33024 | 50339 | 32072 | 52381 |
| 47212 | 165055 | 00476 | 1B3822 | 4437 | 1B3823 | | |
| 47213 | 162240 | 00477 | 1B3824 | 4458 | 1B3810 | | |
| 47214 | 165040 | 00478 | 1B3825 | 4765 | 1B3826 | | |
| 47215 | 1B3840 | 00506 | 1B3793 | 4458 | 1B3810 | | |
| 47519 | 17593 | RA-312 | 52361 | 31132 | 50337 | IR-312 | 52360 |
| 48650 | 166345 | 04253 | 1B3827 | 4529 | 1B3828 | | |
| 48655 | 166346 | 04254 | 1B3829 | 4577 | 1B3830 | | |
| 49275 | 1B3831 | 04096 | 1B3832 | 4458 | 1B3810 | | |
| 49335 | AM-1549 | 04309 | 1B3776 | 4601 | 1B3777 | | |
| 49395 | 50151 | 04316 | 52402 | 4473 | 50344 | | |
| 49410 | 60122 | 04320 | 1B3778 | 4607 | 1B3779 | | |

# ANTI-FRICTION BEARINGS—Continued

## HYATT

| COMPLETE BEARING | | ROLLER ASSEMBLY | | OUTER RACE | | INNER RACE | |
|---|---|---|---|---|---|---|---|
| MAKER'S NUMBER | CATERPILLAR NUMBER | MAKER'S NUMBER | CATERPILLAR NUMBER | MAKER'S NUMBER | CATERPILLAR NUMBER | MAKER'S NUMBER | CATERPILLAR NUMBER |
| 49475 | 1B3838 | 04329 | 1B3797 | 4520 | 1B3839 | | |
| 49480 | 7054 | 46905 | 52371 | 4568 | 50330 | | |
| 49492 | 165814 | 04333 | 1B3877 | 4759 | 1B3878 | | |
| 49555 | 7055 | 04029 | 52372 | 4572 | 52373 | | |
| 49565 | 165645 | 04035 | 1B3870 | 4651 | 1B3871 | | |
| 49575 | 1B3836 | 04010 | 1B3804 | 4526 | 1B3837 | | |
| 56355 | 7772 | 5761 | 52369 | 4390 | 52324 | 30264 | 52325 |
| 56487 | 165048 | 57577 | 52376 | 31143 | 1B3834 | | |
| 56606 | 60329 | 05345 | 52343 | 35066 | 52342 | 30312 | 52341 |
| 57038 | 1B3814 | 57563 | 1B3815 | 33029 | 1B3816 | | |
| 57131 | 60214 | 05100 | 52405 | 33023 | 50334 | 32021 | 50343 |
| 57183 | 1B3786 | 05099 | 1B3787 | 33026 | 1B3788 | 32024 | 1B3789 |
| 57185 | 52421 | 01159 | 52424 | 33028 | 52323 | 32026 | 52422 |
| 58655 | 168021 | 05254 | 1B3829 | 4577 | 1B3830 | | |
| 59475 | 1B3838 | 04329 | 1B3797 | 4520 | 1B3839 | | |
| 59575 | 1B3836 | 05010 | 1B3804 | 4526 | 1B3837 | | |
| | | 93420 | 4B5353 | | | | |
| | | 93524 | 4B3694 | | | | |
| | | 93532 | 98967 | | | | |
| | | BRA-10142 | 4B5353 | | | | |
| S-94416 | 3B569 | RAS-94416 | 3B568 | ORS-94416 | 3B567 | | |

## HYATT

INNER RACE AND ROLLER ASSEMBLY

| MAKER'S NUMBER | CATERPILLAR NUMBER |
|---|---|
| BU-1208 | 6B4947 |
| BU-1209 | 4B8108 |
| BU-1211 | 4B8352 |
| BU-1213 | 7B3642 |
| BU-1307 | 4B3693 |
| BU-1308 | 6B132 |
| BU-1309 | 3B8844 |
| BU-1310 | 3B8971 |
| BU-1311 | 8B2571 |
| BU-1312 | 3B8921 |
| BU-1313 | 3B8845 |
| BU-1314 | 3B8973 |
| BU-1315 | 6B5154 |
| BU-1317 | 4B8365 |
| BU-1320 | 3B8923 |
| BU-5207 | 6B3802 |

OUTER RACE AND ROLLER ASSEMBLY

| MAKER'S NUMBER | CATERPILLAR NUMBER |
|---|---|
| 1205-TS | 8B2321 |
| 1206-TS | 4B3698 |
| 1210 | 8B5963 |
| 1212-TS | 8B5965 |
| 1220-TAS | 4B8264 |
| 1305-TS | 4B9455 |
| 1306-TBS | 5B1975 |
| 1306-TS | 2B9394 |
| 1307-TS | 3B3984 |
| 1308-YS | 4B5559 |
| 1309-YS | 3B3966 |
| 1311-YS | 3B3968 |
| 1312-YS | 6B5163 |
| 1314-YS | 6B5067 |
| 5208-TS | 5B5460 |
| 5210-YS | 6B912 |

## HYATT

INNER RACE

| MAKER'S NUMBER | CATERPILLAR NUMBER |
|---|---|
| IR-206 | 1B3701 |
| IR-207 | 1B3704 |
| IR-211 | 1B3710 |
| IR-213 | 1B3853 |
| IR-218 | 2B3585 |
| IR-306 | 1B3721 |
| IR-310 | 3B2892 |
| IR-311 | 19487 |
| IR-312 | 52360 |
| IR-313 | 1B3736 |
| IR-314 | 58098 |
| A-1212 | 8B5966 |
| A-1220 | 4B8263 |
| A-1306 | 5B1974 |
| AB-1307 | 3B3985 |
| IR-1309 | 3B3967 |
| IR-1311 | 3B3969 |
| A-5205 | 8B2320 |
| 30179 | 1B5389 |
| 30193 | 1B3743 |
| 30229 | 50331 |
| 30244 | 1B3874 |
| 30247 | 1B3819 |
| 30264 | 52325 |
| 30309 | 111804 |
| 30312 | 52341 |
| 30318 | 52375 |
| 30382 | 122394 |
| 30383 | 124191 |
| 30384 | 124514 |
| 30611 | 1B3795 |
| 32013 | 1B3860 |
| 32014 | 1B3785 |
| 32021 | 50343 |
| 32022 | 1B3821 |
| 32024 | 1B3789 |
| 32026 | 52422 |
| 32055 | 122253 |
| 32057 | 1B3783 |
| 32058 | 1B3866 |
| 32059 | 1B3848 |
| 32060 | 1B3747 |
| 32064 | 1B3761 |
| 32069 | 52385 |
| 32072 | 52381 |
| 32075 | 1B3760 |

## HYATT

OUTER RACE

| MAKER'S NUMBER | CATERPILLAR NUMBER |
|---|---|
| OR-206 | 1B3700 |
| OR-207 | 1B3850 |
| OR-207-CT | 1B3703 |
| OR-209 | 1B4370 |
| OR-210 | 1B3707 |
| ORD-210 | 3B1837 |
| ORW-210 | 2B6977 |
| OR-211 | 1B3709 |
| OR-211-CT | 1A1471 |
| ORD-211 | 3B1774 |
| WOR-211 | 3B3971 |
| OR-212 | 1B6520 |
| OR-213 | 1B3714 |
| ORD-214 | 2B7923 |
| ORW-214 | 2B7924 |
| OR-215 | 52414 |
| OR-218 | 2B3586 |
| OR-304 | 1B3740 |
| OR-305 | 1B3717 |
| OR-306 | 1B3720 |
| OR-307 | 1B3724 |
| OR-308 | 1B3727 |
| OR-309 | 52365 |
| OR-310 | 1B3730 |
| OR-311 | 19486 |
| OR-312 | 52412 |
| OR-313 | 1B3735 |
| OR-314 | 22119 |
| OR-404 | 1B3717 |
| 1209-ZA | 4B8107 |
| 1210 | 8B5964 |
| 1211-ZA | 4B8351 |
| 1309-ZA | 3B8860 |
| 1310-ZA | 3B8972 |
| OR-1311-Y | 3B3968 |
| 1312-ZA | 3B8922 |
| 1313-ZA | 3B8859 |
| 1314-ZA | 3B8970 |
| 1317-ZA | 4B8364 |
| 1320-ZA | 3B8924 |
| 4122 | 1B3770 |
| 4123 | 1B3772 |
| 4301 | 1B5365 |
| 4325 | 50338 |
| 4330 | 1B3873 |
| 4390 | 52324 |

## HYATT

OUTER RACE

| MAKER'S NUMBER | CATERPILLAR NUMBER |
|---|---|
| 4401 | 52311 |
| 4409 | 1B3791 |
| 4425 | 1B4169 |
| 4430 | 1B3763 |
| 4431 | 3B2604 |
| 4432 | 1B3846 |
| 4434 | 1B3775 |
| 4437 | 1B3823 |
| 4456 | 1B3855 |
| 4458 | 1B3810 |
| 4468 | 1B3842 |
| 4472 | 1B3876 |
| 4473 | 50344 |
| 4503 | 50335 |
| 4520 | 1B3839 |
| 4526 | 1B3837 |
| 4528 | 50340 |
| 4529 | 1B3828 |
| 4554 | 52310 |
| 4568 | 50330 |
| 4572 | 52373 |
| 4577 | 1B3830 |
| 4600 | 1B3857 |
| 4601 | 1B3777 |
| 4607 | 1B3779 |
| 4651 | 1B3871 |
| 4759 | 1B3878 |
| 4765 | 1B3826 |
| 4766 | 50345 |
| 4776 | 1B3852 |
| 4796 | 1B3768 |
| 4803 | 1B3794 |
| 4804 | 1B3798 |
| 4806 | 1B3802 |
| 4807 | 1B3805 |
| 4811 | 1B3849 |
| 31130 | 1B3746 |
| 31132 | 50337 |
| 31143 | 1B3834 |
| 31253 | 2B2708 |
| 31262 | 1B3757 |

# ANTI-FRICTION BEARINGS—Continued

Remove issue 7 and insert this in its place.

Form 1736 Printed in U.S.A. Issue 8 3-1-1943

## HYATT

OUTER RACE

| MAKER'S NUMBER | CATERPILLAR NUMBER |
|---|---|
| 33007 | 122252 |
| 33009 | 1B3749 |
| 33010 | 1B3865 |
| 33011 | 1B3753 |
| 33015 | 50341 |
| 33016 | 1B3751 |
| 33021 | 52386 |
| 33023 | 50334 |
| 33024 | 50339 |
| 33026 | 1B3788 |
| 33027 | 1B3742 |
| 33028 | 52423 |
| 33029 | 1B3816 |
| 33030 | 50332 |
| 35044 | 1B3812 |
| 35047 | 1B3781 |
| 35049 | 52383 |
| 35055 | 50333 |
| 35066 | 52342 |
| 35091 | 1B3808 |
| 35096 | 1B3818 |
| ORS-94416 | 3B567 |

## MATHEW

| MAKER'S NUMBER | CATERPILLAR NUMBER |
|---|---|
| 7429-T | 1B4084 |

## M.R.C-STROM

| MAKER'S NUMBER | CATERPILLAR NUMBER |
|---|---|
| 3-C | 7719 |
| 5-C | 7718 |
| 12-C | 7174 |
| 34 | 3B7205 |
| 47-E | 7158 |
| 48-E | 8514 |
| 50-E | 7072 |
| 51-E | 8494 |
| 112-M | 2B2888 |
| 112-N | 2B2888 |
| 200-M | 1B5737 |
| 200-SFF | 4B2862 |
| 202-S | 6B926 |
| 203 | 1B6422 |
| 203-S | 6B924 |
| 203-SF | 2B2953 |
| 203-SFF | 3B4128 |
| 204-M | 1B4106 |
| 205 | 1B4144 |
| 205-MF | 1B4143 |
| 205-M | 1B4107 |
| 205-S | 6B1124 |
| 206-L | 1B3867 |
| 206-M | 1B4108 |
| 206-MG | 8B8297 |
| 206-S | 1B3867 |
| 207-M | 1B4109 |
| 207-MF | 8B8774 |
| 207-MG | 8B7622 |
| 208-M | 1B4110 |
| 208-MF | 3B4177 |
| 208-MFF | 3B4421 |
| 209-M | 1B4111 |
| 209-MFF | 8B7946 |
| 209-S | 4B3665 |
| 210-M | 1B4076 |
| 210-MFF | 8B7624 |
| 210-S | 7B3812 |
| 210-SG | 8B7176 |
| 211-M | 1B7617 |
| 211-MFF | 8B7175 |
| 212-M | 1B4112 |
| 212-MF | 9B2635 |
| 212-MFF | 8B7174 |
| 213-M | 1B4113 |

## M.R.C.-STROM

| MAKER'S NUMBER | CATERPILLAR NUMBER |
|---|---|
| 213-MF | 4B8070 |
| 214-S | 7B7515 |
| 215-M | 1B4077 |
| 215-MF | 2B8686 |
| 216-M | 165879 |
| 219-R | 1B6574 |
| 220-S | 5B8061 |
| 300-MF | 2A4943 |
| 303-M | 1B4114 |
| 304 | 61296 |
| 304-M | 1B5388 |
| 305-F | 1B5387 |
| 305-M | 1B4115 |
| 305-MF | 1B5387 |
| 306-F | 1B4142 |
| 306-M | 1B4116 |
| 306-MF | 1B4142 |
| 306-MFF-2 | 1F5730 |
| 307-M | 1B4117 |
| 307-MF | 8B8487 |
| 307-MFF | 3B3654 |
| 308-L | 1B3868 |
| 308-M | 1B4118 |
| 308-MF | 6B528 |
| 308-MFF | 3B3653 |
| 309-M | 1B4119 |
| 309-MFF | 3B3652 |
| 309-MG | 8B8299 |
| 309-S | 8B5972 |
| 309-SFG | 9B2630 |
| 310-M | 1B4120 |
| 310-MFF | 3B3645 |
| 310-S | 8B5961 |
| 311-M | 1B4121 |
| 311-MFF | 3B3648 |
| 312-M | 1B4122 |
| 312-MFF | 9B648 |
| 313-M | 1B4123 |
| 313-MFF | 3B3650 |
| 314-M | 1B4136 |
| 314-MFF | 9B650 |
| 315-M | 166487 |
| 316-M | 1B4124 |
| 316-MFF | 3B3649 |
| 320-M | 1B6571 |
| 320-M-2 | 5B8301 |
| 320-MFF | 3B1364 |
| 404-M | 1B4125 |
| 405-M | 1B4126 |
| 406-M | 1B4127 |
| 407-M | 1B4128 |
| 408-M | 1B4129 |
| 408-MFF | 3B3647 |
| 409-M | 1B4130 |
| 410-M | 1B4137 |
| 412-M | 1B4138 |
| 412-M-2 | 5B8302 |
| 412-MFF | 3B3646 |
| 413-M | 1B4131 |
| 413-M-2 | 5B8300 |
| 413-MFF | 3B1365 |
| 468-E | 61283 |
| 811-E | 18357 |
| 1111-F | 60220 |
| 1112-F | 60221 |
| 1207-H | 1B4720 |
| 2904½ | 7B5353 |
| 2905 | 6B7267 |
| 2906 | 1B4141 |
| 2909 | 2A4110 |
| 5206-F | 8B8298 |
| 5207 | 1B4720 |
| 5207-A | 1B4720 |
| 5207-K | 1B4145 |
| 5209 | 1B5675 |
| 5210-K | 8B8296 |
| 5213-K | 3B1316 |
| 5216 | 8B7623 |
| 5303 | 1B4139 |
| 5304 | 1B4140 |
| 5305 | 2B2887 |
| 5306 | 1B4092 |

## M.R.C.-STROM

| MAKER'S NUMBER | CATERPILLAR NUMBER |
|---|---|
| 5306-F | 5B5257 |
| 5307 | 1B7615 |
| 5307-F | 3B2288 |
| 5308 | 1B7867 |
| 5308-G | 8B7621 |
| 5309 | 1B7616 |
| 5309-F | 4B4728 |
| 5310 | 8B7625 |
| 5311 | 1B4132 |
| 5312 | 1B4135 |
| 5313 | 1B4133 |
| 5314 | 9B141 |
| 5317 | 3B5529 |
| 5318 | 9B647 |
| 7207 | 1B4087 |
| 7209 | 52439 |
| 7210 | 1B4100 |
| 7211 | 165793 |
| 7212 | 1B4101 |
| 7214 | 1B4102 |
| 7215 | 1B4103 |
| 7219 | 1B6574 |
| 7306 | 1B5385 |
| 7309 | 12180 |

## NEW DEPARTURE

| MAKER'S NUMBER | CATERPILLAR NUMBER |
|---|---|
| 34 | 3B7205 |
| 206 | 656-D |
| 207 | AM-3392 |
| 0208 | 1B4085 |
| 0209 | 1B4086 |
| 0210 | 50227 |
| 0212 | 1B4095 |
| 0215 | 1B4094 |
| 0219 | 1B6574 |
| 311 | 1B4132 |
| 313 | 1B4133 |
| 405 | 1B4147 |
| 407 | 1B4087 |
| 408 | 1B4148 |
| 411 | 1B4088 |
| 1200 | 1B5737 |
| 1204 | 1B4106 |
| 1205 | 1B4107 |
| 1206 | 1B4108 |
| 1207 | 1B4109 |
| 1208 | 1B4110 |
| 1209 | 1B4111 |
| 1210 | 1B4076 |
| 1211 | 1B7617 |
| 1212 | 1B4112 |
| 1213 | 1B4113 |
| 1215 | 1B4077 |
| 1216 | 165879 |
| 1303 | 1B4114 |
| 1304 | 1B5388 |
| 1305 | 1B4115 |
| 1306 | 1B4116 |
| 1307 | 1B4117 |
| 1308 | 1B4118 |
| 1309 | 1B4119 |
| 1310 | 1B4120 |
| 1311 | 1B4121 |
| 1312 | 1B4122 |
| 1313 | 1B4123 |
| 1314 | 1B4136 |
| 1315 | 166487 |
| 1316 | 1B4124 |
| 1320 | 1B6571 |
| 1404 | 1B4125 |
| 1405 | 1B4126 |
| 1406 | 1B4127 |
| 1407 | 1B4128 |
| 1408 | 1B4129 |
| 1409 | 1B4130 |
| 1410 | 1B4137 |
| 1412 | 1B4138 |

## NEW DEPARTURE

| MAKER'S NUMBER | CATERPILLAR NUMBER |
|---|---|
| 1413 | 1B4131 |
| 2909 | 2A4110 |
| 3200 | 1B5737 |
| 3202 | 6B926 |
| 3204 | 1B4106 |
| 3205 | 6B1124 |
| 3206 | 1B4108 |
| 3209 | 4B3665 |
| 3210 | 7B3812 |
| 3214 | 7B7515 |
| 3220 | 5B8061 |
| 3303 | 1B4114 |
| 3309 | 8B5972 |
| 3310 | 8B5961 |
| 5209 | 1B5675 |
| 5210 | 8B8296 |
| 5213 | 3B1316 |
| 5303 | 1B4139 |
| 5304 | 1B4140 |
| 5305 | 2B2887 |
| 5306 | 1B4092 |
| 5307 | 1B7615 |
| 5308 | 1B7867 |
| 5309 | 1B7616 |
| 5310 | 8B7625 |
| 5311 | 1B4132 |
| 5312 | 1B4135 |
| 5313 | 1B4133 |
| 5314 | 9B141 |
| 5317 | 3B5529 |
| 5318 | 9B647 |
| 5408 | 1B4148 |
| 5506 | 6B812 |
| 5606 | 4B4731 |
| 5609 | 3B5530 |
| 7205 | 1B4143 |
| 7212 | 9B2635 |
| 7213 | 4B8070 |
| 7215 | 2B8686 |
| 7305 | 1B5387 |
| 7306 | 1B4142 |
| 7307 | 8B8487 |
| 7308 | 6B528 |
| 7503 | 2B2953 |
| 20209 | 1B4099 |
| 20210 | 1B4100 |
| 20211 | 165793 |
| 20212 | 1B4101 |
| 20214 | 1B4102 |
| 20215 | 1B |
| 20219 | 1B |
| 20309 | |
| 20306 | |
| 41206 | 3297 |
| 47609 | 9B2630 |
| 77209 | 8B7946 |
| 77210 | 8B7624 |
| 77211 | 8B7175 |
| 77212 | 8B7175 |
| 77312 | 9B648 |
| 77314 | 9B650 |
| 77508 | 3B4421 |
| 88504 | 3B2084 |

## NICE

| MAKER'S NUMBER | CATERPILLAR NUMBER |
|---|---|
| 512 | AM-1112 |
| 607 | 1B4151 |
| 609 | AM-3395 |
| 617 | 1B3898 |
| 622 | 2B4125 |
| 626 | AM-2425 |
| 912 | 1B5550 |
| 1010 | 1B4104 |
| 4985 | 1B4105 |
| 5212 | 1B5550 |

# ANTI-FRICTION BEARINGS—Continued

## SCHATZ

| MAKER'S NUMBER | CATERPILLAR NUMBER |
|---|---|
| A-4750 | 1B3732 |

## S.K.F.

| MAKER'S NUMBER | CATERPILLAR NUMBER |
|---|---|
| 203 | 1B6422 |
| 0406 | 1B4059 |
| 407 | 1B4060 |
| 408 | 1B4061 |
| 910 | 1B4062 |
| 911 | 7B7668 |
| 912 | 1B4149 |
| 913 | 7774 |
| 914 | 7765 |
| 916 | 5B6447 |
| 919 | 1B4063 |
| 1203 | 1B4055 |
| 1205 | 60064 |
| 1206 | 7B3291 |
| 1207 | 7766 |
| 1208 | 166295 |
| 1210 | 7175 |
| 1306 | 1B4894 |
| 1310 | 166290 |
| 2209 | 1B4168 |
| 2210 | 1B4064 |
| 2211 | 1B4065 |
| 2212 | 1B4066 |
| 2213 | 1B4067 |
| 2307 | 1B4056 |
| 2308 | 1B4057 |
| 2309 | 1B4058 |
| 2310 | 5B3349 |
| 2311 | 1B4068 |
| 2312 | 2B8252 |
| 2314 | 1B5386 |
| 2317 | 3B2626 |
| 5306 | 1B4092 |
| 10406 | 1B4059 |
| 10407 | 1B4060 |
| 10408 | 1B4061 |
| 22217 | 7B1409 |
| 22219 | 6B8150 |

## TORRINGTON

| MAKER'S NUMBER | CATERPILLAR NUMBER |
|---|---|
| B-47 | 4B2861 |
| B-88 | 1F4622 |
| B-148 | 4B3671 |
| B-812 | 3B3911 |
| B-912 | 4B3673 |
| B-1012 | 4B2090 |
| B-1416 | 4B3672 |
| B-1616 | 7B5670 |
| B-1816 | 4B1933 |
| B-2420 | 7B4791 |
| B-2420-X | 1F5515 |
| M-10121 | 582113 |
| NB-3 | 4B3394 |

## TIMKEN—CONE

| MAKER'S NUMBER | CATERPILLAR NUMBER |
|---|---|
| 21-A | 1B6175 |
| 355 | 1B3879 |
| 355-A | 6B125 |
| 357 | 1B5687 |
| 375 | 9B1666 |
| 385 | 1B3882 |
| 395 | 4B7255 |
| 418 | 1B3885 |
| 422 | 1B3888 |
| 438 | 1B3890 |
| 439 | 5B6444 |

## TIMKEN—CONE

| MAKER'S NUMBER | CATERPILLAR NUMBER |
|---|---|
| 444 | 1B3893 |
| 447 | 1B3895 |
| 455 | 2B3379 |
| 456 | 165560 |
| 460 | 1B3899 |
| 462 | 1B3901 |
| 466 | 1B3903 |
| 477 | 1B3905 |
| 527 | 4B5180 |
| 528 | 1B4152 |
| 529 | 1B3908 |
| 537 | 1B3911 |
| 537-E | 1B3913 |
| 539 | 1B3915 |
| 555-S | 2B9049 |
| 557-S | 1B3917 |
| 558 | 6B5158 |
| 559 | 1B3920 |
| 566 | 1B3921 |
| 567 | 1B3897 |
| 568 | 6B3183 |
| 580 | 1B3924 |
| 594 | 4B7270 |
| 619 | 2B2632 |
| 623 | 4B5181 |
| 639 | 2B3183 |
| 641 | 1B3927 |
| 644 | 7B1410 |
| 663 | 1B4040 |
| 665 | 2B3116 |
| 685 | 2B9174 |
| 687 | 4B8395 |
| 740 | 4B7941 |
| 744 | 2B3184 |
| 749 | 1B3930 |
| 759 | 1B3933 |
| 779 | 1B3936 |
| 780 | 1B3939 |
| 782 | 1B4043 |
| 855 | 1B6572 |
| 898 | 6B4852 |
| 936 | 1B3941 |
| 1954 | 1B4047 |
| 1985 | 1B3944 |
| 1986 | 1B3947 |
| 02474 | 8B2880 |
| 2785 | 1B3950 |
| 2788 | 1B3953 |
| 02872 | 3B7389 |
| 02875 | 4B2074 |
| 02877 | 3B5789 |
| 3187 | 1B3957 |
| 3188 | 1B3960 |
| 3381 | 1B3963 |
| 3383 | 1B3966 |
| 3554 | 1B3972 |
| 3577 | 1B3969 |
| 3578 | 1B3975 |
| 3757 | 1B3977 |
| 3779 | 2B2633 |
| 3780 | 1B3980 |
| 3782 | 6B3824 |
| 3979 | 2A4577 |
| 5358 | 1B3982 |
| 5361 | 1B3982 |
| 5551 | 1B3985 |
| 5564 | 1B3988 |
| 5578 | 1B3990 |
| 5584 | 1B3991 |
| 5760 | 1F883 |
| 6280 | 1B3993 |
| 6377 | 1B3996 |
| 6382 | 1B3999 |
| 6464 | 8B6512 |
| 6552 | 1B4001 |
| 6553 | 1B4004 |
| 6554 | 1B4006 |
| 07098 | 1B4008 |
| 09074 | 167860 |
| 14117-A | 1B4011 |
| 14118 | 1B5688 |
| 14123 | 1B4014 |
| 14125 | 1B4014 |
| 14131 | 1B4018 |

## TIMKEN—CONE

| MAKER'S NUMBER | CATERPILLAR NUMBER |
|---|---|
| 14136 | 1B5689 |
| 14137 | 1B4020 |
| 14138-A | 1B5384 |
| 26131 | 3B3921 |
| 28150 | 1B4022 |
| 42362 | 3B4125 |
| 43125 | 4B3033 |
| 43131 | 7B7870 |
| 44150 | 1B5595 |
| 44156 | 1B4025 |
| 52387 | 1B4028 |
| 52388-D | 7B2889 |
| 53176 | 1B4031 |
| 53177 | 8B4405 |
| 56418 | 8B6342 |
| 64450 | 4B9373 |
| 67388 | 7B358 |
| 71450 | 1B4034 |
| 72200 | 1B4046 |
| 72212 | 1B4037 |
| 95525 | 1B6579 |
| 99600 | 1B6577 |

## TIMKEN—CUP

| MAKER'S NUMBER | CATERPILLAR NUMBER |
|---|---|
| 23 | 1B6176 |
| 36-X | 5B735 |
| 39 | 5B743 |
| 352 | 1B5686 |
| 354-A | 1B3880 |
| 354-B | 6B124 |
| 372-A | 9B1665 |
| 383 | 1B3883 |
| 394-A | 6B3224 |
| 414 | 1B3886 |
| 432 | 1B3891 |
| 452 | 120690 |
| 453-A | 1B3900 |
| 453-X | 2B3380 |
| 472 | 1B3906 |
| 522 | 1B3909 |
| 532-A | 1B3912 |
| 552-A | 1B3918 |
| 563 | 1B3922 |
| 572 | 1B3925 |
| 592-A | 6B3223 |
| 612 | 2B2631 |
| 632 | 1B3928 |
| 652 | 1B4041 |
| 672 | 4B8394 |
| 672-B | 2B9175 |
| 742 | 1B3931 |
| 752 | 1B3934 |
| 772 | 1B3937 |
| 772-B | 1B4044 |
| 854 | 1B6573 |
| 892-B | 6B4851 |
| 932 | 1B3942 |
| 1920 | 1B4048 |
| 1930 | 1B3945 |
| 1931 | 1B3948 |
| 02420 | 8B2881 |
| 2720 | 1B3951 |
| 2729 | 1B3955 |
| 02820 | 3B5790 |
| 3120 | 1B3961 |
| 3120-B | 1B3958 |
| 3320 | 1B3964 |
| 3329-B | 1B3967 |
| 3520 | 1B3973 |
| 3525 | 3B2263 |
| 3525-B | 1B3970 |
| 3720 | 1B3978 |
| 3920 | 2A4576 |
| 5320 | 1B3983 |
| 5520 | 1B3986 |
| 5735 | 1F882 |
| 6220 | 1B3994 |
| 6320 | 1B3997 |
| 6420 | 8B6511 |

## TIMKEN—CUP

| MAKER'S NUMBER | CATERPILLAR NUMBER |
|---|---|
| 6520 | 1B4002 |
| 07204 | 1B4009 |
| 09194 | 127595 |
| 14274 | 1B4012 |
| 14283 | 1B4016 |
| 26274 | 3B3920 |
| 28315-B | 1B4023 |
| 42584 | 3B4124 |
| 43312 | 4B3034 |
| 44348 | 1B4026 |
| 52618 | 7B2888 |
| 52637 | 1B4029 |
| 53387 | 1B4032 |
| 56650 | 8B6343 |
| 64700 | 4B9374 |
| 67320-B | 7B4956 |
| 67322 | 7B357 |
| 71750 | 4B8393 |
| 71750-B | 1B4035 |
| 72487 | 1B4038 |
| 95925 | 1B6580 |
| 99100-B | 1B6578 |

## TIMKEN MISC. PARTS

| MAKER'S NUMBER | CATERPILLAR NUMBER |
|---|---|
| K-3600 | 1B5583 |
| K-6108 | 1D4271 |
| K-6135 | 1D4270 |
| K-6141 | 1D4272 |
| K-8110 | 1B4155 |
| K-8111 | 1B4156 |
| K-8112 | 1B4157 |
| K-9002 | 1B4159 |
| K-9002-X | AX-149 |
| K-9003 | 1B4160 |
| K-9007 | 1B5592 |
| K-9007-P | 1B8446 |
| K-9011 | 1B4161 |
| K-9012 | 1B4161 |
| K-10339 | 2B6892 |
| K-10340 | 1B4158 |
| K-10341 | 1B5593 |
| K-10373 | 1B4162 |
| K-10438 | 1D4273 |
| T-113 | 1B4153 |
| T-144 | 4B5178 |
| T-201 | 1B4154 |
| T-27361 | 1B4167 |
| T-27362 | 1B4166 |
| 8310 | 4B9253 |

# TWIN DISC CLUTCH No. 4940 MODEL V-4½"

Manufacturer
TWIN DISC CLUTCH CO.
Racine, Wisconsin

For Parts Service on this Clutch, Order from the Manufacturer or his Representative

Form 1736 Printed in U.S.A. Issue 1 3-1-36

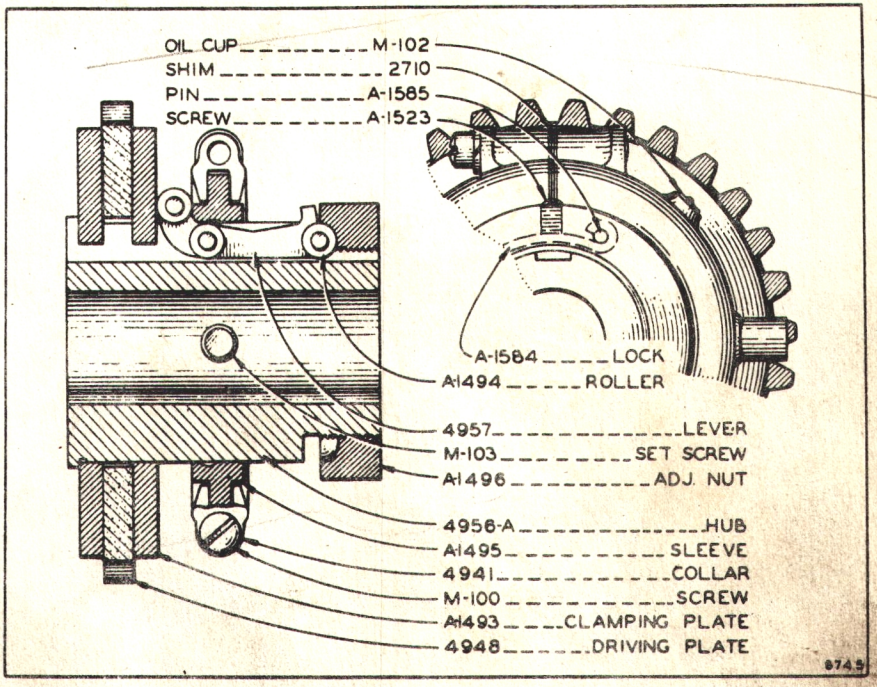


CATERPILLAR NO. 3B360

NUMBERS SHOWN ARE MANUFACTURERS, NOT "CATERPILLAR" PART NUMBERS, EXCEPT WHEN SPECIFIED.

# FAIRBANKS, MORSE AUXILIARY WATER PUMP No. 5520 1″ DISCHARGE

Manufacturer
FAIRBANKS, MORSE & CO.
900 South Wabash Ave.
Chicago, Illinois

For Parts Service on this Pump, Order from the Manufacturer or his Representative

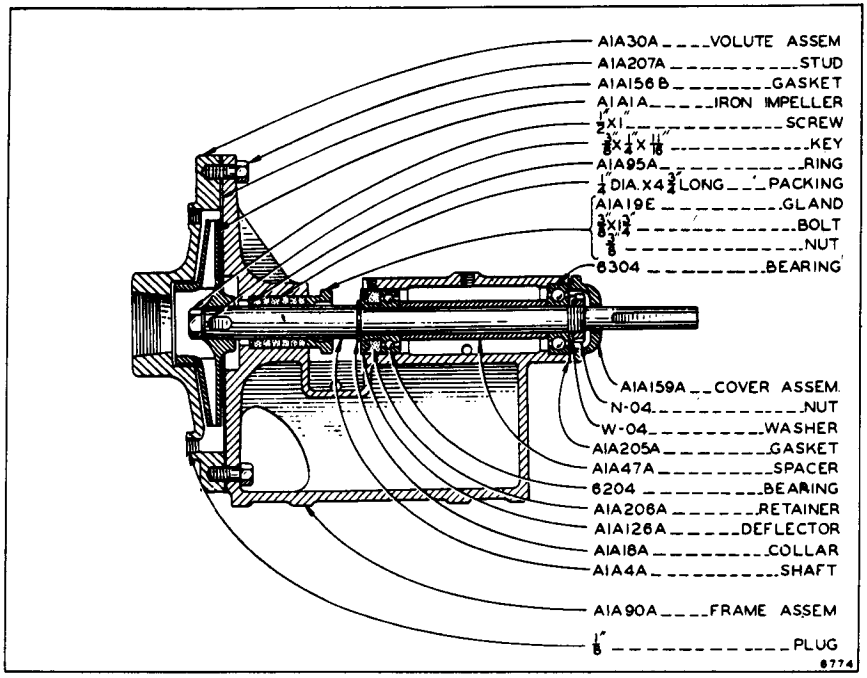


CATERPILLAR NO. 2B5896

NUMBERS SHOWN ARE MANUFACTURERS, NOT "CATERPILLAR" PART NUMBERS, EXCEPT WHEN SPECIFIED.

Form 1736 Printed in U.S.A. Issue 1 3-1-36

# VIKING FUEL PUMP MODEL C-90-D

Manufacturer
VIKING PUMP COMPANY
Cedar Falls, Iowa

For Parts Service on this Pump, Order from the Manufacturer or his Representative

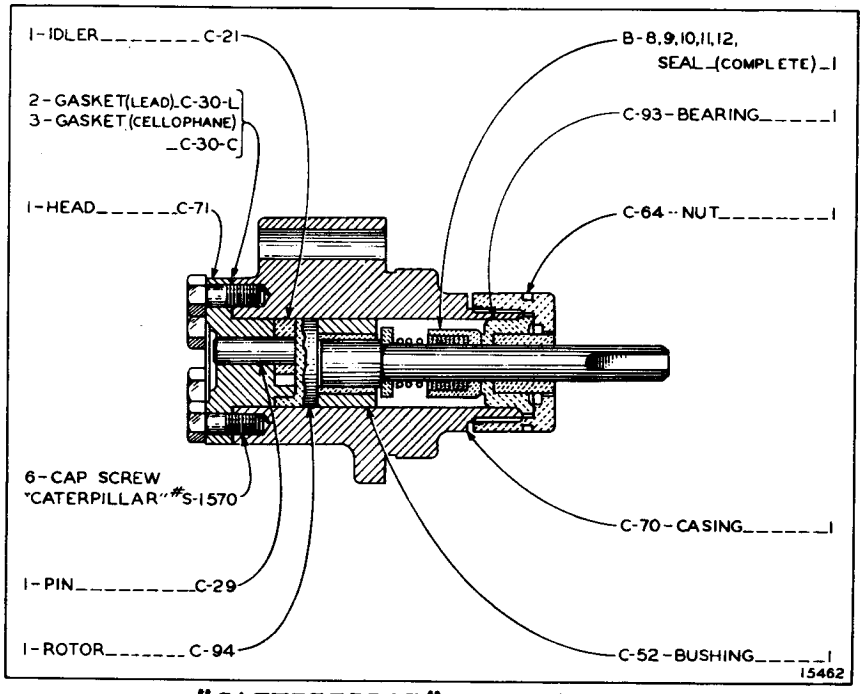


"CATERPILLAR" NO. 3B2482

NUMBERS SHOWN ARE MANUFACTURERS, NOT "CATERPILLAR" PART NUMBERS, EXCEPT WHEN SPECIFIED.

Remove Issue 1 and insert this in it's place.

Form 1736 Printed in U.S.A. Issue 2 4-1-41

# ZENITH CARBURETOR - TYPE K5A 1¼" No. 7279

Manufacturer
ZENITH CARBURETOR CO.
696 Hart Avenue
Detroit, Michigan

For Parts Service on this Carburetor, Order from the Manufacturer or his Representative

Form 1786 Printed in U.S.A. Issue 1 3-1-36

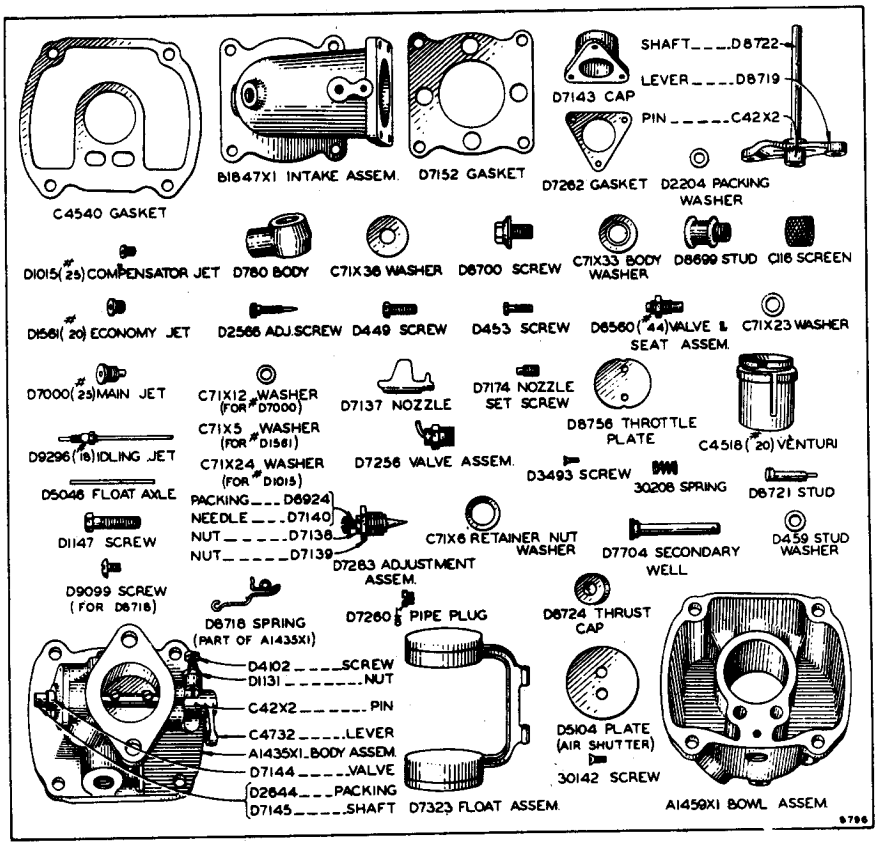


## CATERPILLAR NO. 3B181
## (For Kerosene)

NUMBERS SHOWN ARE MANUFACTURERS, NOT "CATERPILLAR" PART NUMBERS, EXCEPT WHEN SPECIFIED.

# ZENITH CARBURETOR - TYPE TU-4C No. 7513

Manufacturer
ZENITH CARBURETOR CO.
696 Hart Avenue
Detroit, Michigan

For Parts Service on this Carburetor, Order from the Manufacturer or his Representative

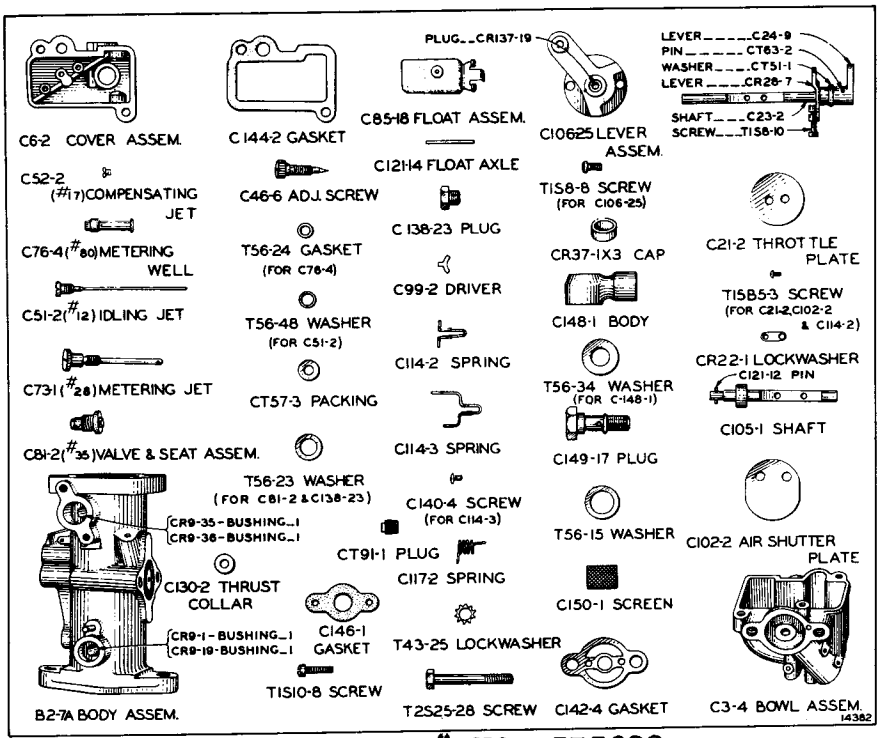


"CATERPILLAR" NO. 3B3088

NOTE: SEE BACK OF PAGE FOR C13-4-3 REPLACEMENT FUEL BOWL ASSEMBLY PARTS.

NUMBERS SHOWN ARE MANUFACTURERS, NOT "CATERPILLAR" PART NUMBERS, EXCEPT WHEN SPECIFIED.

REMOVE ISSUE 2 AND INSERT THIS IN ITS PLACE.

Form 1736 Printed in U. S. A. Issue 3 2-1-40

C13-4-3 Replacement Fuel Bowl Assembly
Consists of:

| | | |
|---|---|---|
| 1 | C3-4 | Fuel Bowl Assembly - Well Vent 1.5m/m drill |
| 1 | C6-2 | Fuel Bowl Cover Assembly |
| 1 | C142-4 | Bowl to Body Gasket |
| 1 | C144-2-1 | Bowl to Cover Gasket |
| 4 | T1S10-8 | Bowl Cover Assembly Screw |
| 4 | T41-10 | Bowl Cover Assembly Screw Lockwasher |
| 1 | C73-1 | Jet Adjustment Needle Assembly #28 |
| 1 | C114-2 | Jet Adjustment Spring |
| 2 | T15B5-3 | Jet Adjustment Spring Assembly Screw |
| 1 | C81-2 | Fuel Valve Assembly #35 |
| 1 | T56-23 | Fuel Valve Fibre Washer |
| 1 | C121-28 | Float Axle |
| 1 | C85-18 | Float Assembly |
| 1 | C76-4 | Metering Well #80 |
| 1 | T56-24 | Metering Well Fibre Washer |
| 1 | C52-2 | Comp. Jet #17 |
| 1 | CT91-1 | Drain Plug (1/8 pipe) |
| 1 | C138-23 | Lower Plug |
| 1 | T56-23 | Lower Plug Fibre Washer |
| 1 | C148-1 | Union Body |
| 1 | T56-34 | Union Body Washer |
| 1 | C149-17 | Union Body Plug |
| 1 | T56-15 | Union Body Plug Washer |
| 1 | C150-1 | Union Body Screen |
| 1 | CT91-1 | Overflow Plug (1/8 pipe) |

# ZENITH CARBURETOR - TYPE K5A 1¼" No. 7433

Manufacturer
ZENITH CARBURETOR CO.
696 Hart Avenue
Detroit, Michigan

For Parts Service on this Carburetor, Order from the Manufacturer or his Representative

Form 1736 Printed in U.S.A. Issue 1 3-1-36

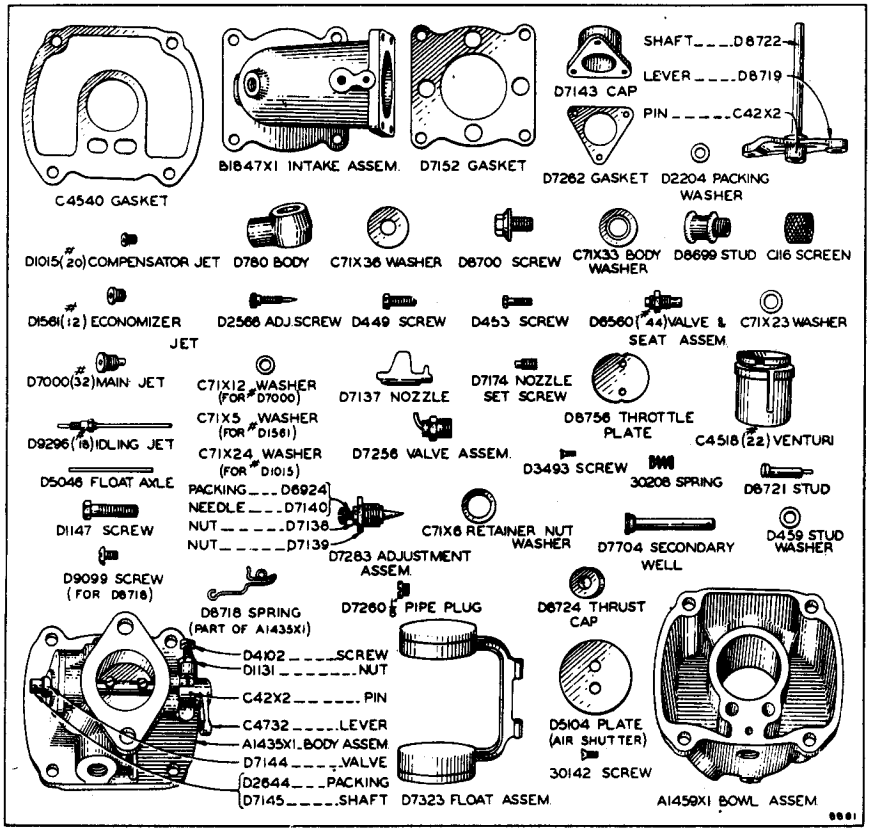


## CATERPILLAR NO. 3B875

## (For Gasoline)

NUMBERS SHOWN ARE MANUFACTURERS, NOT "CATERPILLAR" PART NUMBERS, EXCEPT WHEN SPECIFIED.

# EISEMANN MAGNETO MODEL RT-2H

Manufacturer
**EISEMANN MAGNETO CORPORATION**
**60 East 42 Street, New York, N. Y.**

**For Parts Service on this Magneto, Order from the Manufacturer or his Representative**

Form 1736 Printed in U. S. A. Issue 1 5-1-36

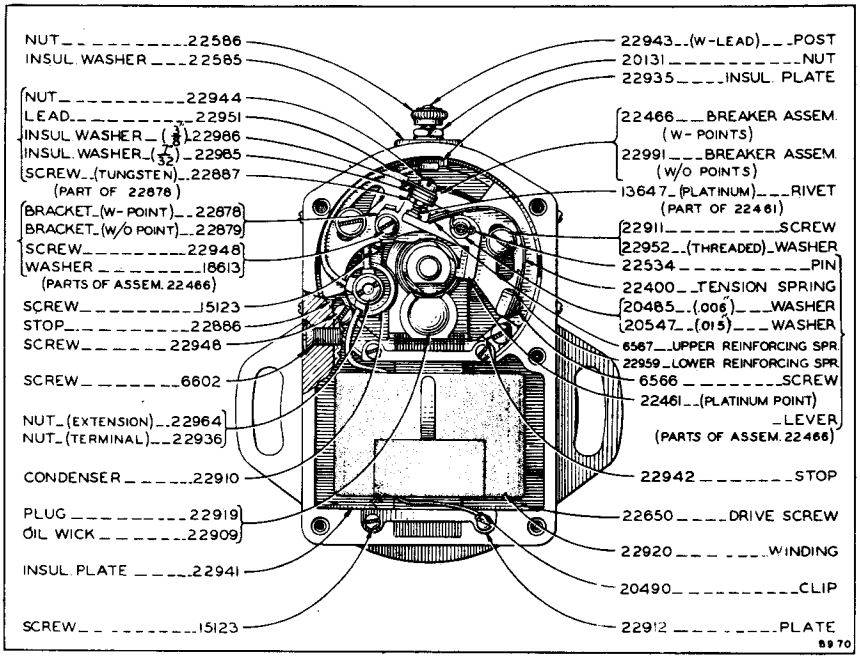


## RT-2H MAGNETO

(Continued on back of page)

MAGNETO "CATERPILLAR" NO. 2A4320
Consists of:
1-Magneto-Eisemann Model RT-2H

MAGNETO "CATERPILLAR" NO. 2A4520
Consists of:
1-Magneto-Eisemann Model RT-2H
1-Impulse Starter-Eisemann Model IS-5 No. 22440

See page 202 for separate parts of Impulse Starter, Floating Disc and Adjustable Drive Hub.

NUMBERS SHOWN ARE MANUFACTURERS, NOT "CATERPILLAR" PART NUMBERS, EXCEPT WHEN SPECIFIED.

NUMBERS SHOWN ARE MANUFACTURERS, NOT "CATERPILLAR" PART NUMBERS, EXCEPT WHEN SPECIFIED.

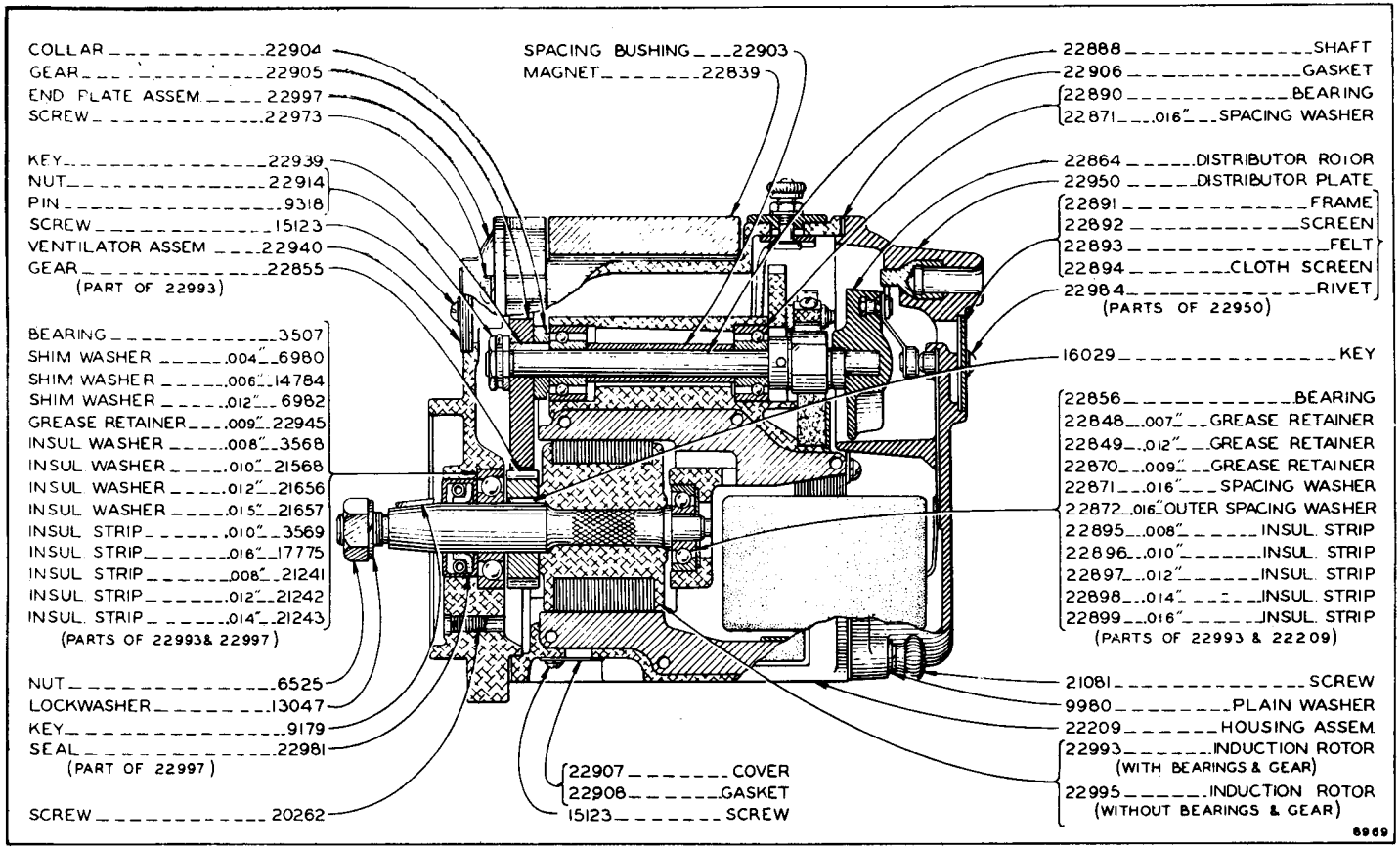

# ZENITH CARBURETOR—TYPE K5A, 1¼" No. 7455

Manufacturer
ZENITH CARBURETOR CO.
696 Hart Avenue
Detroit, Michigan

For Parts Service on this Carburetor, Order from the Manufacturer or his Representative

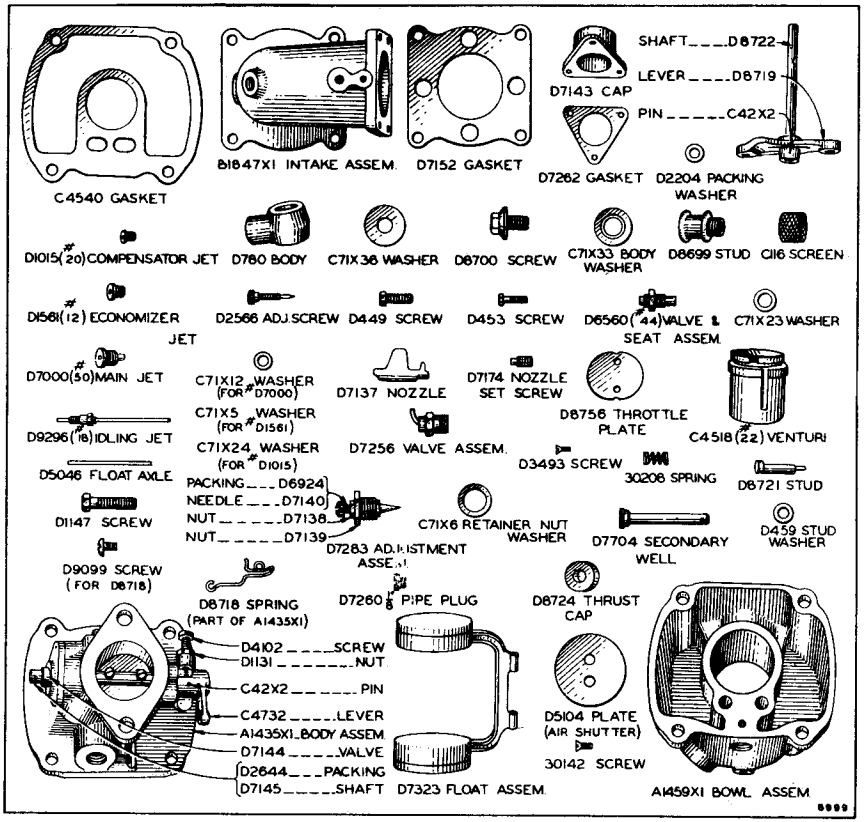


CATERPILLAR NO. 3B2669
(For Alcohol)

NUMBERS SHOWN ARE MANUFACTURERS, NOT "CATERPILLAR" PART NUMBERS, EXCEPT WHEN SPECIFIED.

Form 1736 Printed in U. S. A. Issue 1 5-1-36

# ZENITH CARBURETOR—TYPE K6A 1½" No. 7331

Manufacturer
**ZENITH CARBURETOR CO.**
696 Hart Avenue
Detroit, Michigan

For Parts Service on this Carburetor, Order from the Manufacturer or his Representative

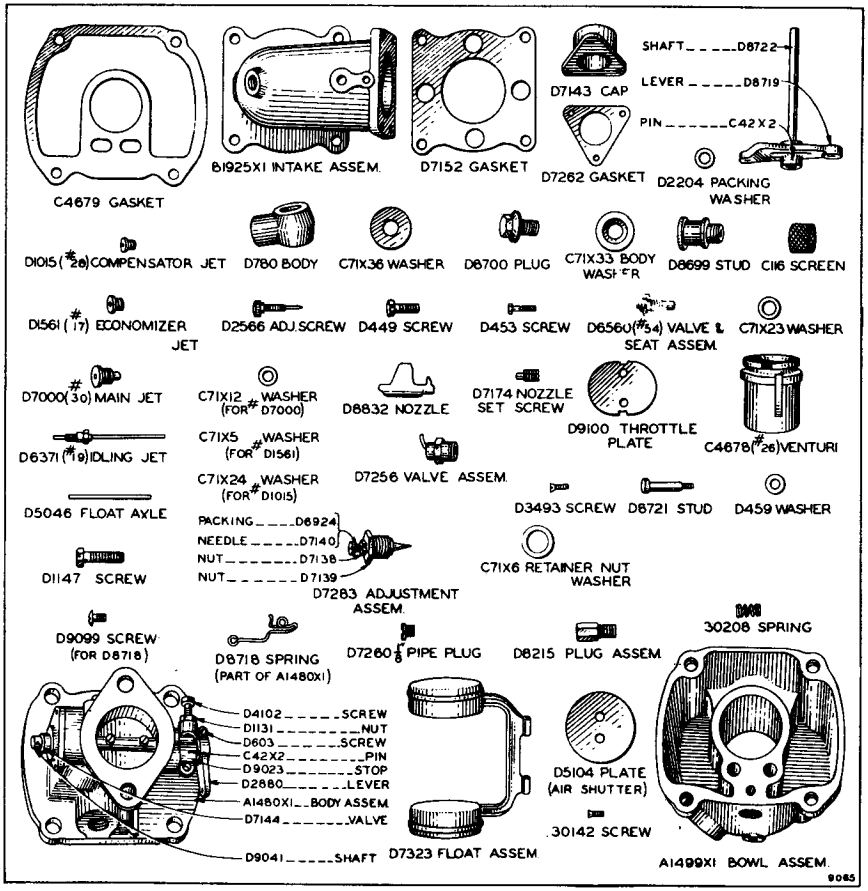


CATERPILLAR NO. 3B1934
(For Alcohol)

NUMBERS SHOWN ARE MANUFACTURERS, NOT "CATERPILLAR" PART NUMBERS, EXCEPT WHEN SPECIFIED.

Form 1736 Printed in U. S. A. Issue 1 5-1-36

# EISEMANN MAGNETO MODEL CM-4

Manufacturer
EISEMANN MAGNETO CORPORATION
60 East 42 Street - New York, N. Y.

For Parts Service on this Magneto, Order from the Manufacturer or his Representative

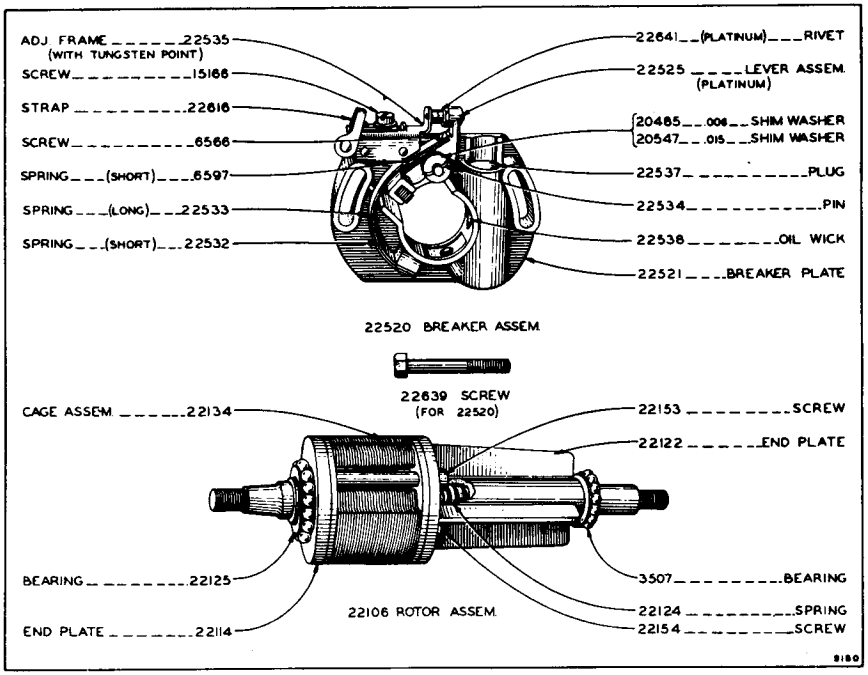


ROTOR AND BREAKER ASSEMBLIES

Form 1736 Printed in U.S.A. Issue 1 7-1-36

MAGNETO "CATERPILLAR" NO. 3B4690
Consists of:

1-Magneto-Eisemann Model CM-4
1-Impulse Starter-Eisemann Model IS-5 No.22833
1-Coupling

See page 108 for Separate parts of Impulse Starter.

See back of page 107 for Separate parts of Coupling.

NUMBERS SHOWN ARE MANUFACTURERS, NOT "CATERPILLAR" PART NUMBERS, EXCEPT WHEN SPECIFIED.

NUMBERS SHOWN ARE MANUFACTURERS', NOT "CATERPILLAR" PART NUMBERS, EXCEPT WHEN SPECIFIED.

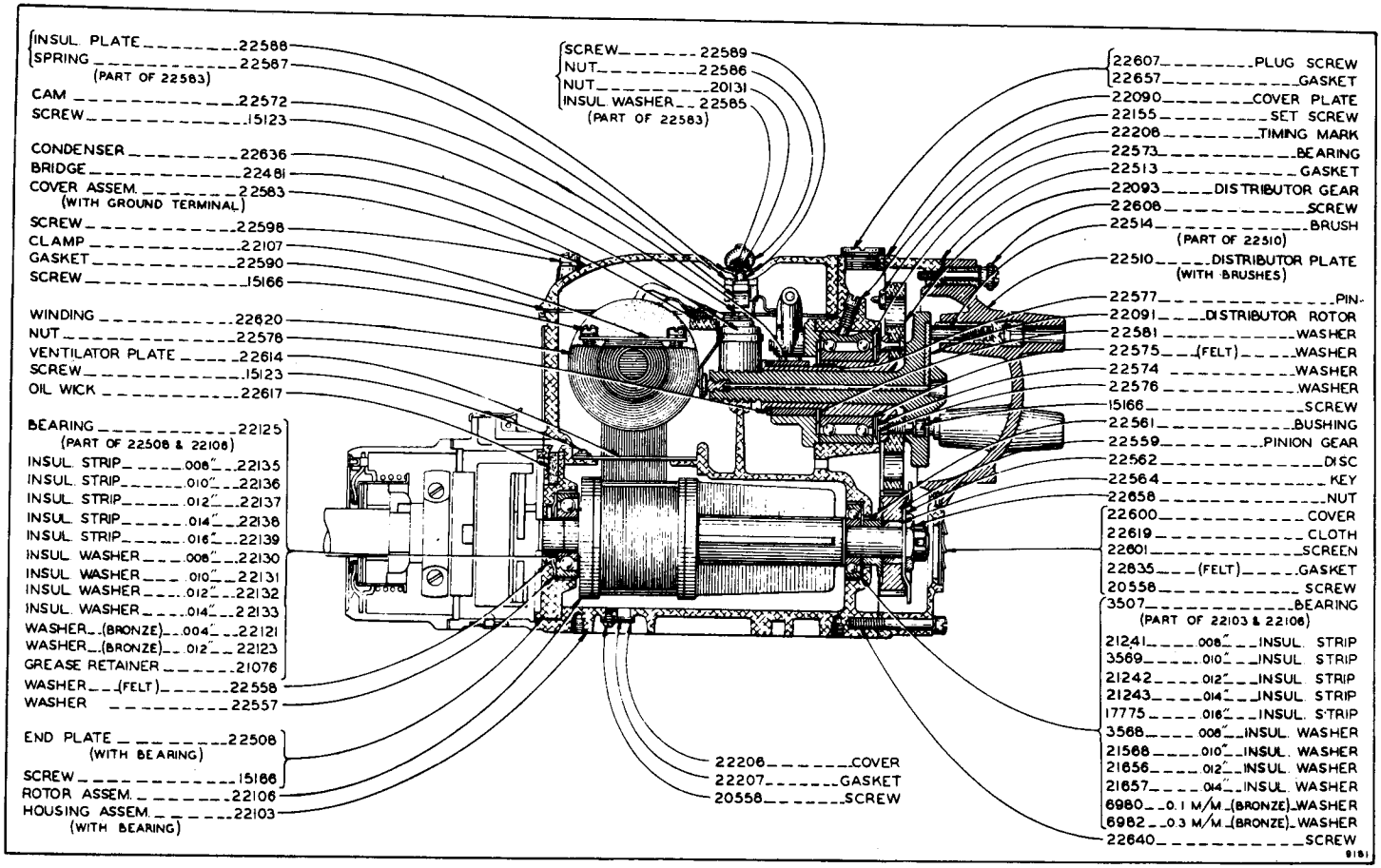


CM-4 MAGNETO

# VIKING FUEL PUMP MODEL C-90-F

Manufacturer
VIKING PUMP COMPANY
Cedar Falls, Iowa

For Parts Service on this Pump, Order from the Manufacturer or his Representative

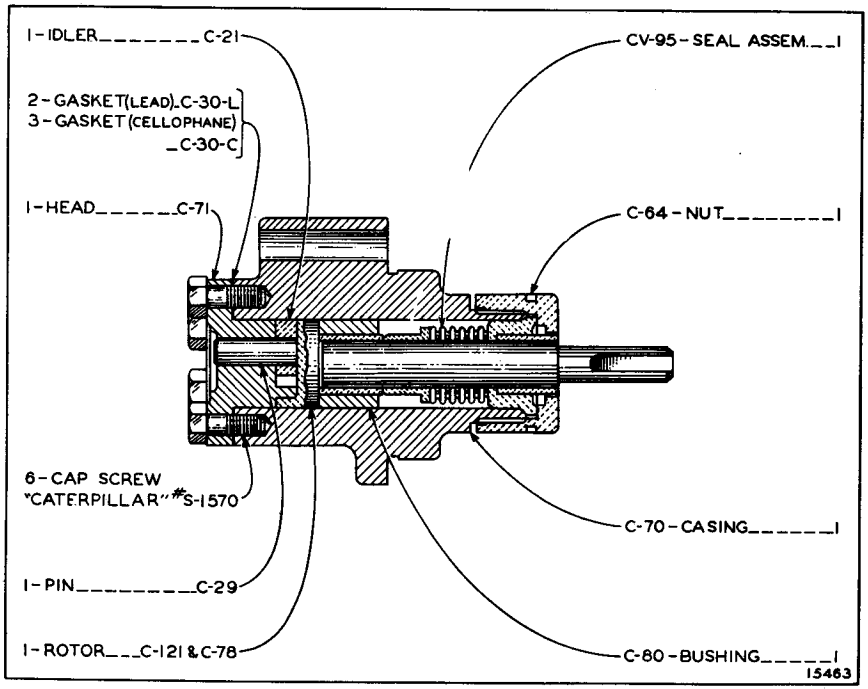


"CATERPILLAR" NO. 3B5160

Remove Issue 1 and insert this in its place.

Form 1736 Printed in U. S. A. Issue 2 2-1-41

NUMBERS SHOWN ARE MANUFACTURERS, NOT "CATERPILLAR" PART NUMBERS, EXCEPT WHEN SPECIFIED.

# DONALDSON AIR CLEANERS

Manufacturer
DONALDSON COMPANY, Inc.
666 Pelham Street
Saint Paul, Minn.

For Parts Service on this Air Cleaner, Order from the Caterpillar Tractor Co. Peoria, Ill.

Form 1736 Printed in U. S. A. Issue 2 12-1-38

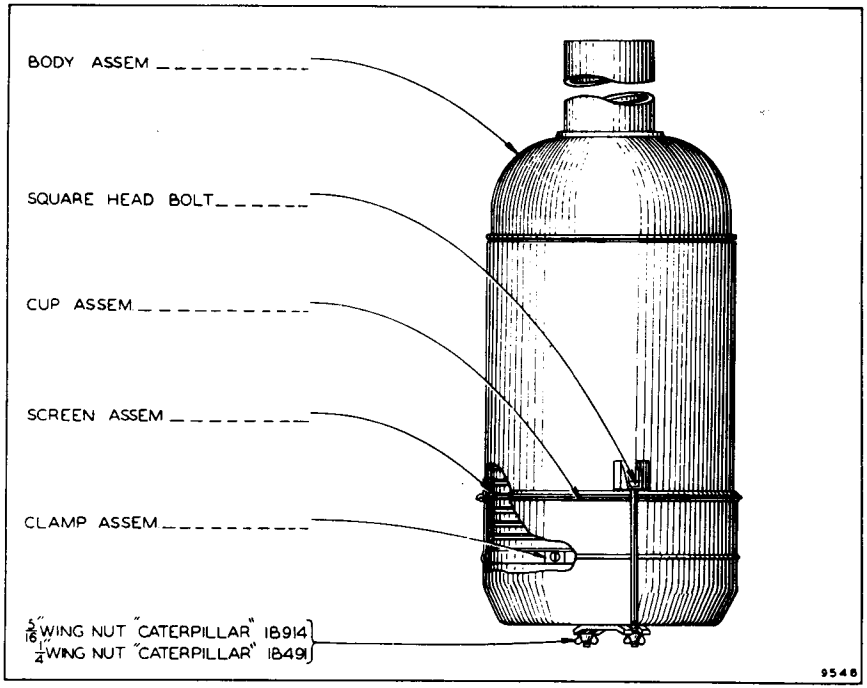


| "Caterpillar" Part No. | Air Cleaner | Body Assem. | Cup Assem. | Screen Assem. | No. Used | Clamp Assem. | Square Head Bolt |
|---|---|---|---|---|---|---|---|
| 3B6841 | A-1107 | P-1832 | P-1408C | P-1409 | 6 | P-1402 | 5/16-18 N.C.x 6 1/4" |
| 3B7217 | A-911 | P-1840 | P-1376A | P-1377 | 6 | P-1339 | 5/16-18 N.C.x 6 1/4" |
| 3B7218 | A-1009 | P-1843 | P-1372B | P-1379 | 6 | P-1338 | 5/16-18 N.C.x 7" |
| 3B7851 | A-1108 | P-1832 | P-1408C | P-1409 | 6 | P-1402 | 5/16-18 N.C.x 6 1/4" |
| 4B235 | A-1009 | *P-1843 | P-1372B | P-1379 | 6 | P-1338 | 5/16-18 N.C.x 7" |
| 4B2071 | A-913 | 2P-2127 | 2P-2162 | 2P-1377 | 6 | P-1339 | 1/4-20 N.C.x 5 1/2" |
| 4B2444 | A-1110 | 2P-2240 | P-2241 | 2P-1409 | 6 | P-1402 | 5/16-18 N.C.x 7" |
| 4B3259 | A-1012 | 2P-2243 | 2P-1372 | 2P-1379 | 6 | P-1338 | 5/16-18 N.C.x 7" |
| 4B4493 | A-863 | 2P-2179 | P-2188 | 2P-1515 | 6 | P-1339 | 1/4-20 N.C.x 5 1/2" |

*Note: To Adapt P-1843 Body Assem. to 4B235 Air Cleaner the stack must be cut off and 4B193 Plate welded on.

NUMBERS SHOWN ARE MANUFACTURERS, NOT "CATERPILLAR" PART NUMBERS, EXCEPT WHEN SPECIFIED.

# ZENITH CARBURETOR - TYPE 22AX8 No. 7782

Manufacturer
ZENITH CARBURETOR CO.
696 Hart Avenue
Detroit, Michigan

For Parts Service on this Carburetor, Order from the Manufacturer or his Representative

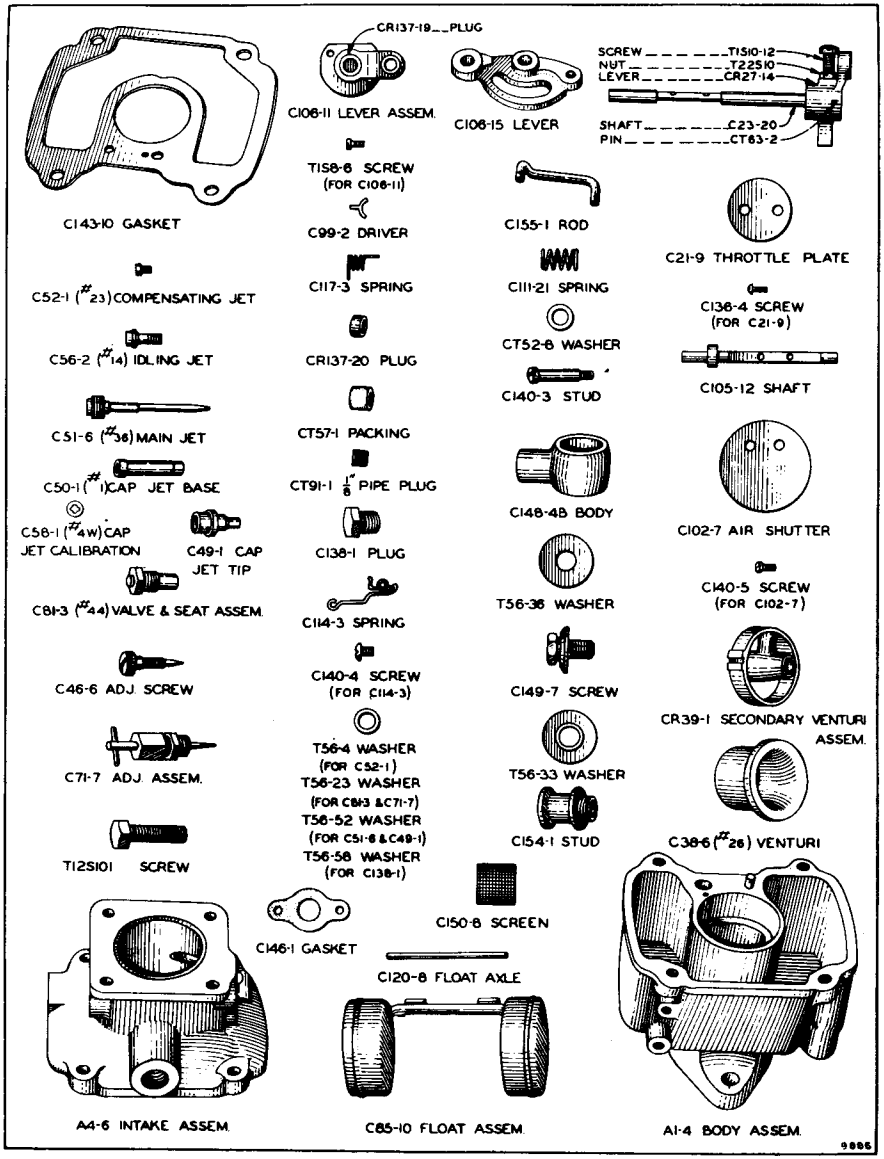


"CATERPILLAR" NO. 3B6395 (First Type).

NUMBERS SHOWN ARE MANUFACTURERS, NOT "CATERPILLAR" PART NUMBERS, EXCEPT WHEN SPECIFIED.

REMOVE ISSUE 1 AND INSERT THIS IN ITS PLACE.

Form 1736 Printed in U. S. A. Issue 2 2-1-39

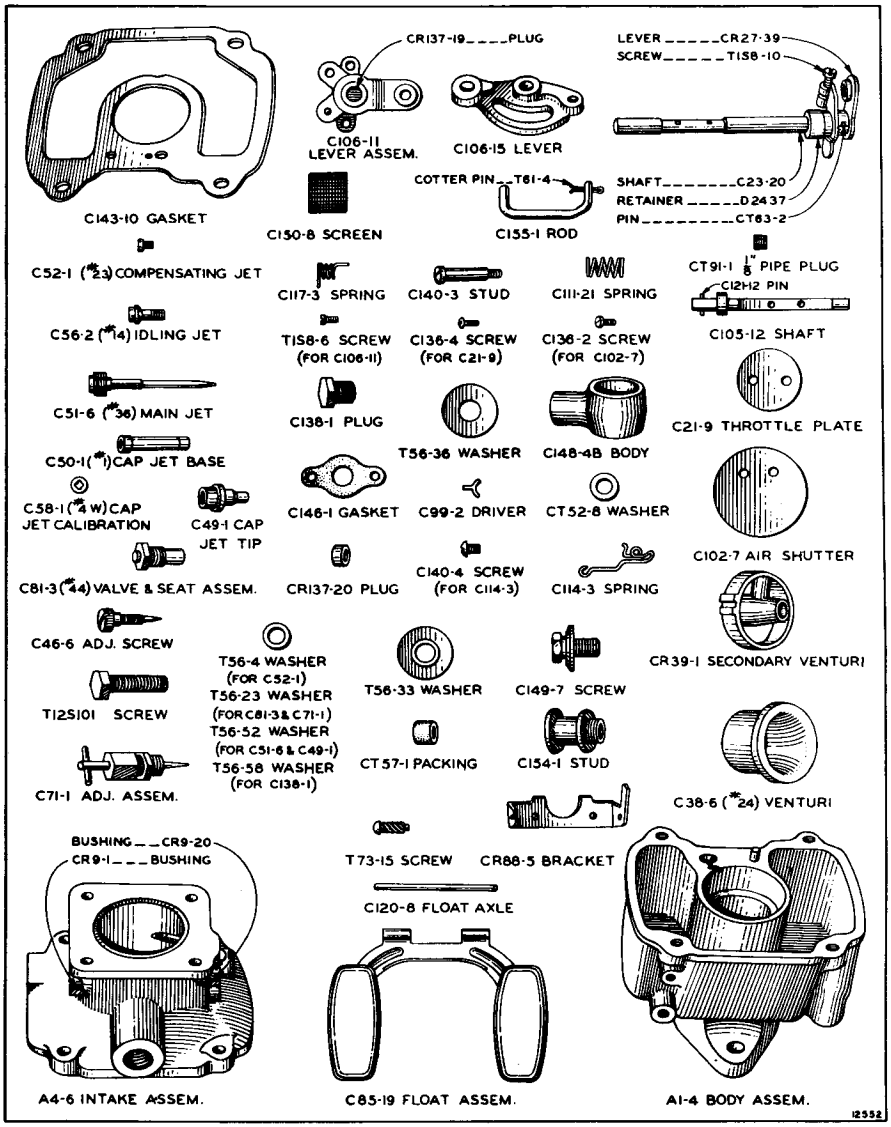


"CATERPILLAR" NO. 3B6395 (Second Type).

# FAIRBANKS, MORSE AUXILIARY WATER PUMP MODEL 5520 2″ DISCHARGE ¾″ SHAFT

Manufacturer
FAIRBANKS, MORSE & CO.
900 South Wabash Ave.
Chicago, Illinois

For Parts Service on this Pump, Order from the Manufacturer or his Representative

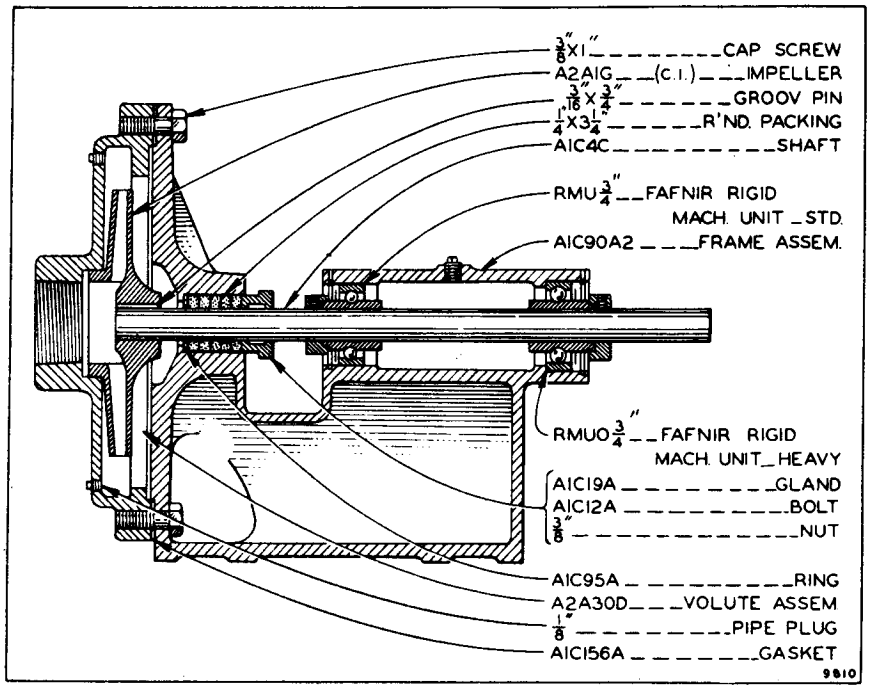


CATERPILLAR NO.3B7842

Form 1736 Printed in U.S.A. Issue 1 6-1-36

NUMBERS SHOWN ARE MANUFACTURERS, NOT "CATERPILLAR" PART NUMBERS, EXCEPT WHEN SPECIFIED.

# KELLOGG TIRE PUMP MODEL 42-5125

Manufacturer
KELLOGG COMPRESSOR & MFG. CORP.
Rochester, New York

For Parts Service on this Pump, Order from the Manufacturer or his Representative

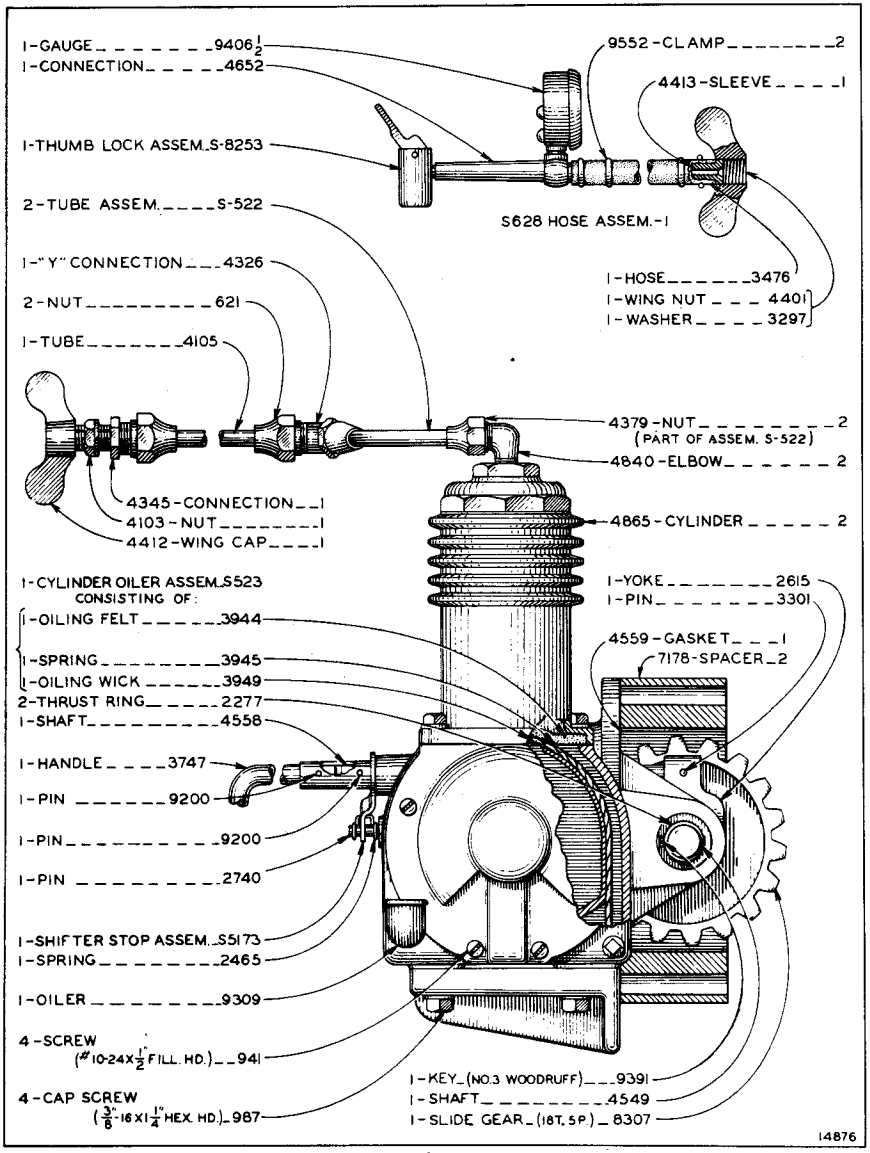


"CATERPILLAR" NO. 3B7943

(Continued on Back of Page)

NUMBERS SHOWN ARE MANUFACTURERS, NOT "CATERPILLAR" PART NUMBERS, EXCEPT WHEN SPECIFIED.

Remove Issue 1 and insert this in it's place.

Form 1738 Printed in U. S. A. Issue 2 8-15-40

NUMBERS SHOWN ARE MANUFACTURERS', NOT "CATERPILLAR" PART NUMBERS, EXCEPT WHEN SPECIFIED.

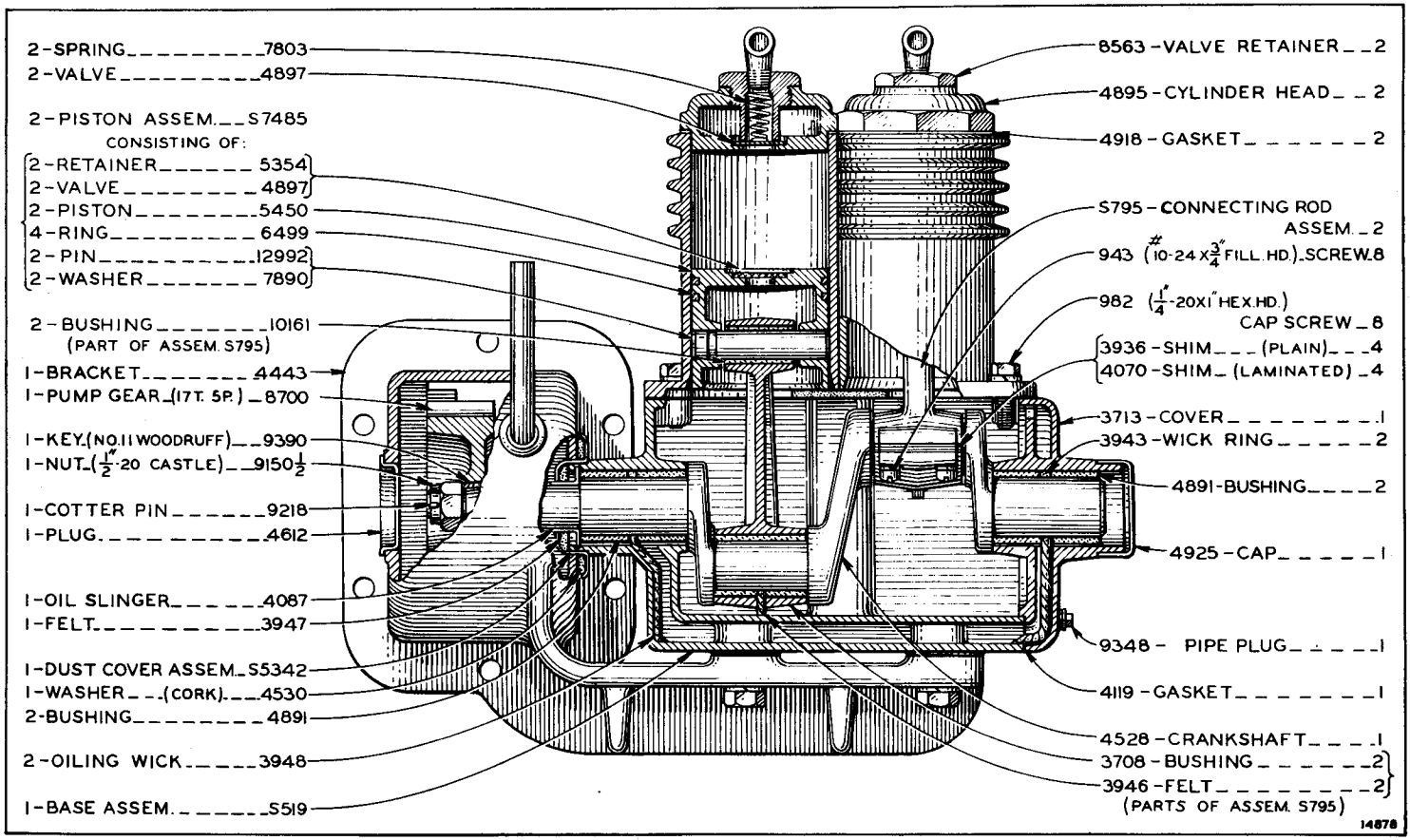

# EISEMANN MAGNETO MODEL RC-2Q

Manufacturer
**EISEMANN MAGNETO CORPORATION**
**60 East 42 Street, New York, N. Y.**

**For Parts Service on this Magneto, Order from the Manufacturer or his Representative**

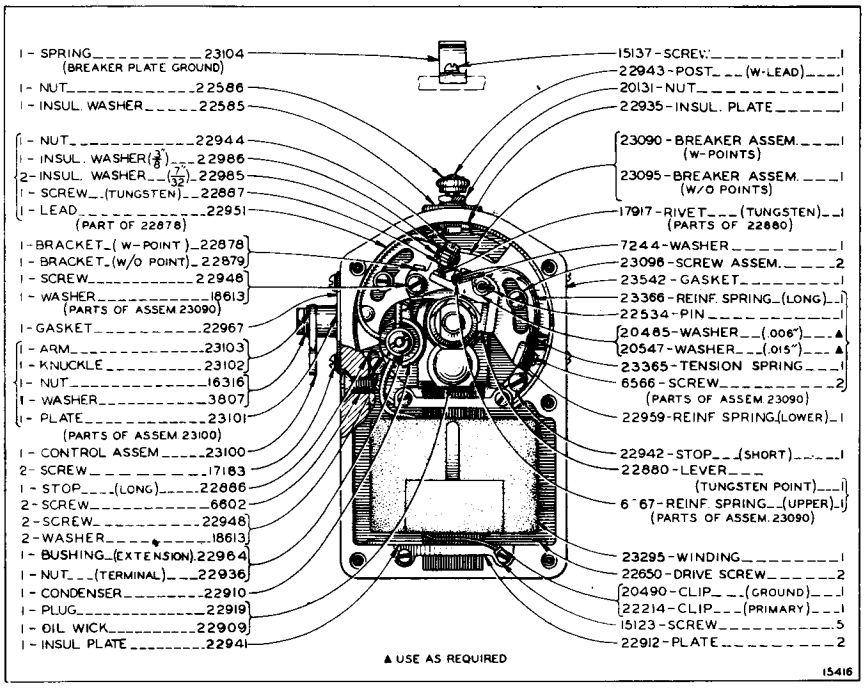


"Caterpillar" No. 4B719 Magneto
Consists of:
Magneto Parts. . . . . .Shown on this page
1-22739 Impulse Starter. . . . . .Page 120
1-21813 Floating Disc
1-21974 Drive Hub Assembly (Adjustable)

- - - - - - - - - - - - - - - - - - - - - - -

"Caterpillar" No. 6B1707 Magneto
Consists of:
Magneto Parts. . . . . .Shown on this page
1-23910 Impulse Starter. . . . . .Page 261
1-21813 Floating Disc
1-21974 Drive Hub Assembly (Adjustable)

- - - - - - - - - - - - - - - - - - - - - - -

NUMBERS SHOWN ARE MANUFACTURERS, NOT "CATERPILLAR" PART NUMBERS, EXCEPT WHEN SPECIFIED.

Remove Issue 3 and insert this in its place.

Form 1736 Printed in U.S.A. Issue 4 11-1-40

NUMBERS SHOWN ARE MANUFACTURERS, NOT "CATERPILLAR" PART NUMBERS, EXCEPT WHEN SPECIFIED.

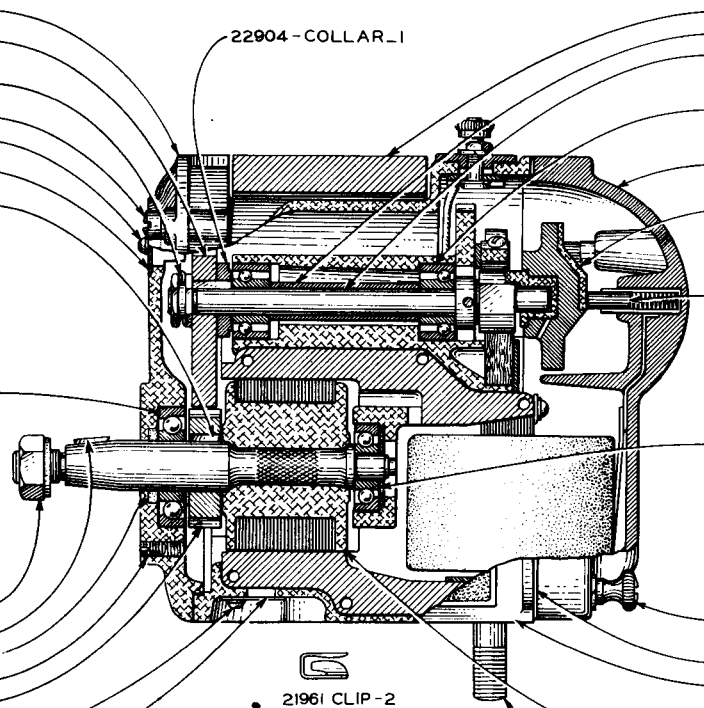

1- END PLATE ASSEM. 22996
1- GEAR 22905
1- KEY 22939
1- NUT 22914
1- COTTER PIN 9318
4- SCREW 22973
4- SCREW 15123
2- COVER 22966
1- GASKET 23542
1- KEY 16029

1- BEARING 3507
▲- SHIM WASHER (.004" THICK) 6980
▲- SHIM WASHER (.006" THICK) 14784
▲- SHIM WASHER (.012" THICK) 6982
1- GREASE RETAINER (.009" THICK) 22945
▲- INSUL. WASHER (.008" THICK) 3568
▲- INSUL. WASHER (.010" THICK) 21568
▲- INSUL. WASHER (.012" THICK) 21656
▲- INSUL. WASHER (.014" THICK) 21657
▲- INSUL. STRIP (.010" THICK) 3569
▲- INSUL. STRIP (.016" THICK) 17775
▲- INSUL. STRIP (.008" THICK) 21241
▲- INSUL. STRIP (.012" THICK) 21242
▲- INSUL. STRIP (.014" THICK) 21243
(PARTS OF 22992 & 22996)

1- NUT 6525
1- LOCK WASHER 13047
1- KEY 9179
1- DUST WASHER 22946
3- SCREW 20262
1- GEAR 22855
(PART OF 22992)

2- SCREW 15123
1- COVER 22907
1- GASKET 22908

22904 - COLLAR - 1

21961 CLIP - 2

4- STUD "CATERPILLAR" # 3B2460
▲ - USE AS REQUIRED

22839 - MAGNET 1
22903 - BUSHING 1
22969 - SHAFT 1

22890 - BEARING 2
22871 - SPACING WASHER (.016" THICK) 1

23195 - DISTRIBUTOR PLATE 1
(WITH CARBON BRUSHES)

23185 - DISTRIBUTOR ROTOR 1
(ANTI - CLOCKWISE)

21062 - CARBON BRUSH 3

22856 - BEARING 1
22848 - GREASE RET. (.007" THICK) ▲
22849 - GREASE RET. (.012" THICK) ▲
22870 - GREASE RET. (.009" THICK) 1
22871 SPACING WASHER (.016" THICK) 1
22872 - SPACING WASHER (.016" THICK) 1
22895 - INSUL. STRIP (.008" THICK) ▲
22896 - INSUL. STRIP (.010" THICK) ▲
22897 - INSUL. STRIP (.012" THICK) ▲
22898 - INSUL. STRIP (.014" THICK) ▲
22899 - INSUL. STRIP (.016" THICK) ▲
(PARTS OF 22992 & 22209)

22608 - SCREW 4

22906 - GASKET 1
22209 - HOUSING ASSEM. 1

22992 - INDUCTION ROTOR 1
(WITH BEARINGS & GEAR)
22994 - INDUCTION ROTOR 1
(WITHOUT BEARINGS & GEAR)

15388

# DELCO-REMY GENERATOR MODEL 939-N

Manufacturer
DELCO-REMY CORPORATION
Anderson, Indiana

For Parts Service on this Generator Order from the United Motors Service Corp. or their Representative

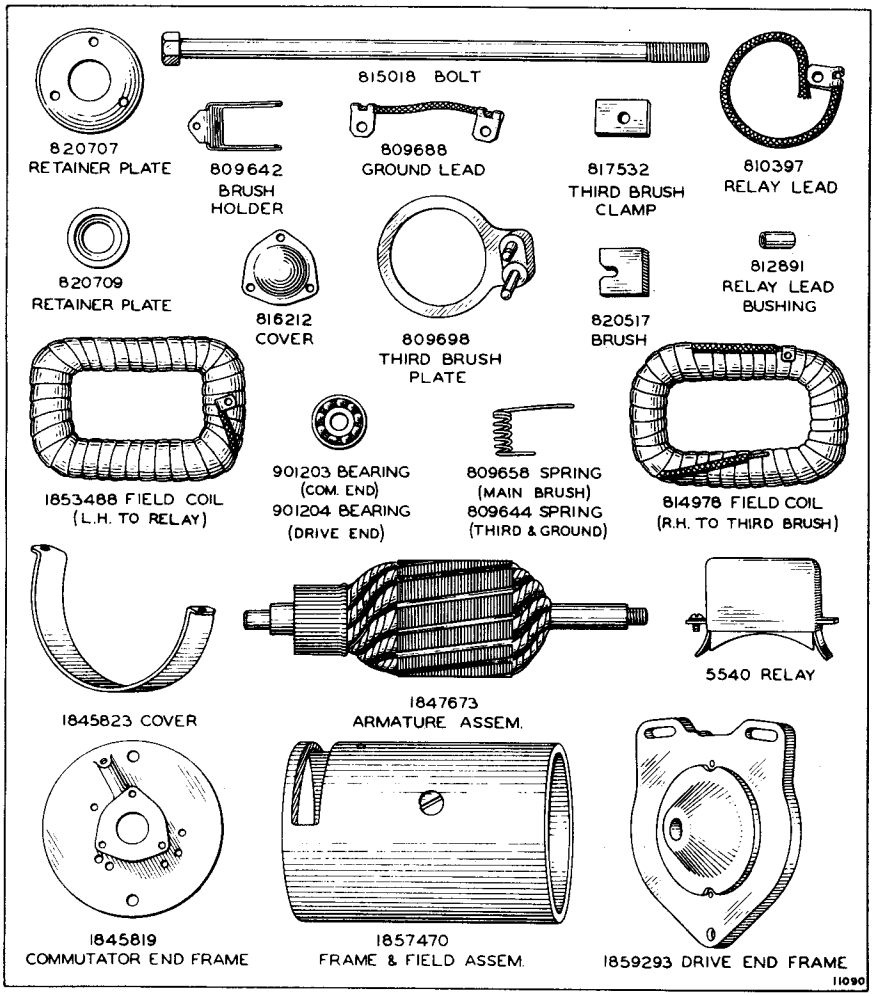


"CATERPILLAR" NO. 4B5931

(Note: List of Parts not shown in this illustration on back of page.)

NUMBERS SHOWN ARE MANUFACTURERS, NOT "CATERPILLAR" PART NUMBERS, EXCEPT WHEN SPECIFIED.

Form 1736 Printed in U. S. A. Issue 1 1-1-38

| Part No. | Description |
|---|---|
| 1845822 | Collar - Oil Throwing (Outside D.E.) |
| 820708 | Gasket - Bearing Retainer Plate D.E. |
| 1835457 | Gasket - End Cover Plate C.E. |
| 103906 | Key - Woodruff D.E. |
| 802731 | Lockwasher - Bearing Retainer Plate Screw D.E. |
| 141550 | Lockwasher - Brush Attaching Screw |
| 802730 | Lockwasher - Brush Lead Attaching Screw |
| 141552 | Lockwasher - 3rd Brush Plate Clamp Screw |
| 141552 | Lockwasher - End Cover Plate Screw C.E. |
| 138479 | Lockwasher - Relay Unit Mounting Screw |
| 141555 | Lockwasher - Thru Bolt |
| 103047 | Nut - Shaft D.E. |
| 114998 | Oiler - C.E. |
| 113702 | Oiler - D.E. |
| 820547 | Oil Baffle D.E. |
| 802692 | Oil Wick - C.E. |
| 817313 | Pin - Brush Holder Hinge |
| 817314 | Pin - Brush Holder Stop |
| 812016 | Pin - Brush Holder Hinge & Insulation |
| 812015 | Pin - Brush Holder Stop & Insulation |
| 809614 | Pin - 3rd Brush Plate Spring Washer |
| 809062 | Pin - Dowel C.E. |
| 809593 | Pin - Dowel D.E. |
| 813496 | Pole Shoe |
| 115431 | Screw - Bearing Retainer Plate D.E. |
| 1862803 | Screw - Brush Attaching |
| 141540 | Screw - Brush Lead Attaching |
| 141543 | Screw - 3rd Brush Plate Clamp |
| 132910 | Screw - Cover Band |
| 115431 | Screw - End Cover Plate C.E. |
| 828675 | Screw - Pole Shoe |
| 132900 | Screw - Relay Unit Mounting |
| 1857107 | Terminal Clip (To Brush) |
| 833634 | Terminal Clip (R.H. to Relay) |
| 811884 | Terminal Clip (L.H. to Relay) |
| 809551 | Washer - Brush Attaching Screw Plain |
| 809824 | Washer - 3rd Brush Plate Spring |
| 820706 | Washer - Felt D.E. |
| 1856056 | Washer - Relay Unit Mounting Screw |
| 811381 | Washer - Shaft Nut Plain D.E. |
| 822644 | Washer - Space (Inside D.E.) |

NUMBERS SHOWN ARE MANUFACTURERS, NOT "CATERPILLAR" PART NUMBERS, EXCEPT WHEN SPECIFIED.

# DONALDSON AIR CLEANER MODEL B-600

Manufacturer
**DONALDSON COMPANY, Inc.**
666 Pelham Street
Saint Paul, Minn.

For Parts Service on this Air Cleaner, Order from the Caterpillar Tractor Co., Peoria, Ill. or San Leandro, Cal.

Form 17:6 Printed in U. S. A. Issue 1 1-2-39

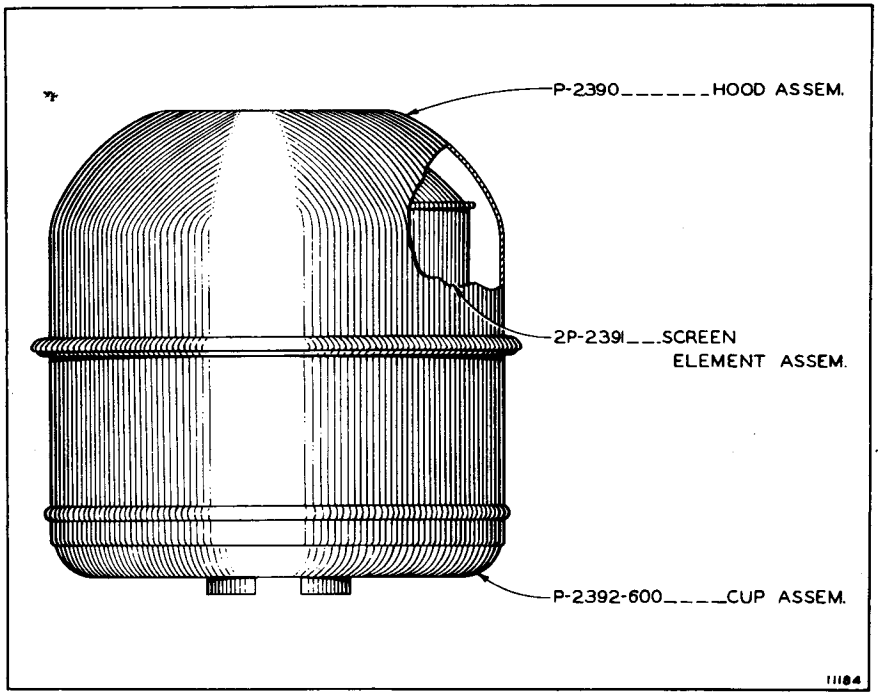


CATERPILLAR NO. 4B6979

NUMBERS SHOWN ARE MANUFACTURERS, NOT "CATERPILLAR" PART NUMBERS, EXCEPT WHEN SPECIFIED.

# EISEMANN IMPULSE STARTER No. 23444

Manufacturer
EISEMANN MAGNETO CORPORATION
60 East 42 Street, New York, N. Y.

For Parts Service on this Impulse Starter Order from the Manufacturer or his Representative

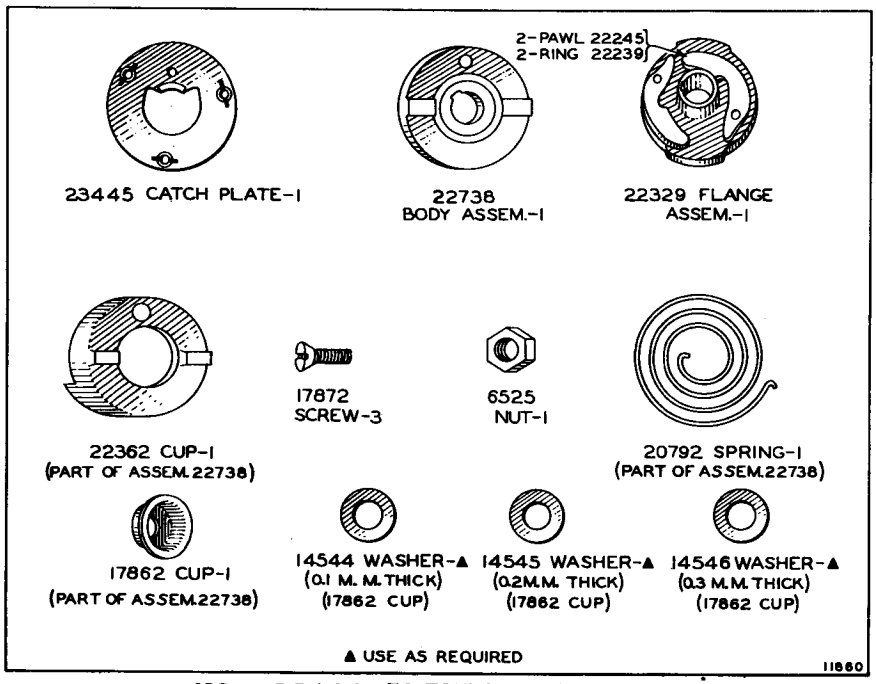


NO. 23444 IMPULSE STARTER

Form 1736 Printed in U. S. A. Issue 1 6-1-39

NUMBERS SHOWN ARE MANUFACTURERS, NOT "CATERPILLAR" PART NUMBERS, EXCEPT WHEN SPECIFIED.

# DONALDSON AIR CLEANER MODEL A-436

Manufacturer
DONALDSON COMPANY, Inc.
666 Pelham Street
Saint Paul, Minn.

For Parts Service on this Air Cleaner, Order from the Caterpillar Tractor Co. Peoria, Ill.

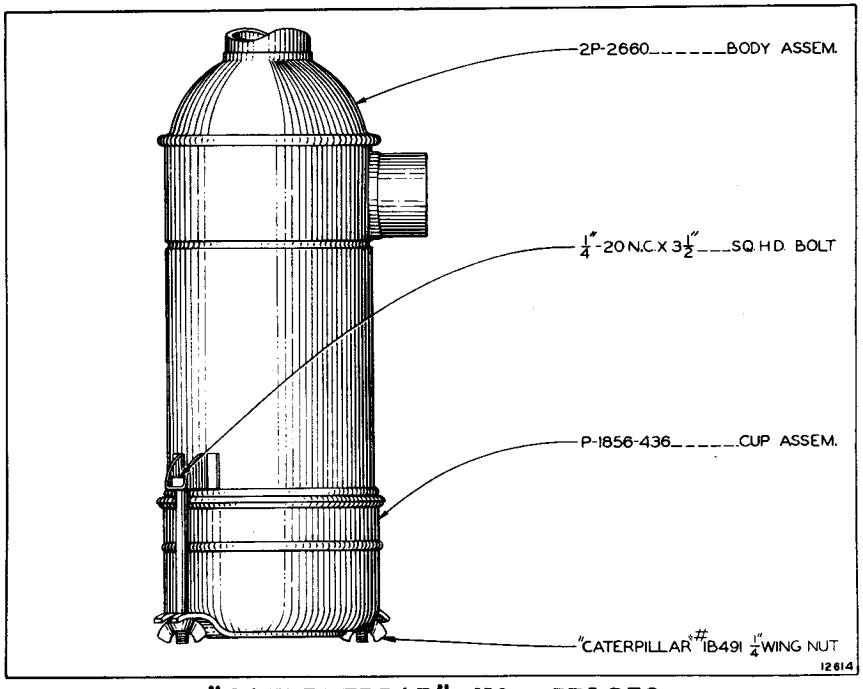


"CATERPILLAR" NO. 5B1238

NUMBERS SHOWN ARE MANUFACTURERS, NOT "CATERPILLAR" PART NUMBERS, EXCEPT WHEN SPECIFIED.

Form 1736 Printed in U.S.A. Issue 1 2-1-39

# SHERWOOD BRASS WORKS WATER PUMP

Manufacturer
SHERWOOD BRASS WORKS
Detroit, Michigan

For Parts Service on this Pump, Order from the Caterpillar Tractor Co., Peoria, Ill. or San Leandro, Cal.

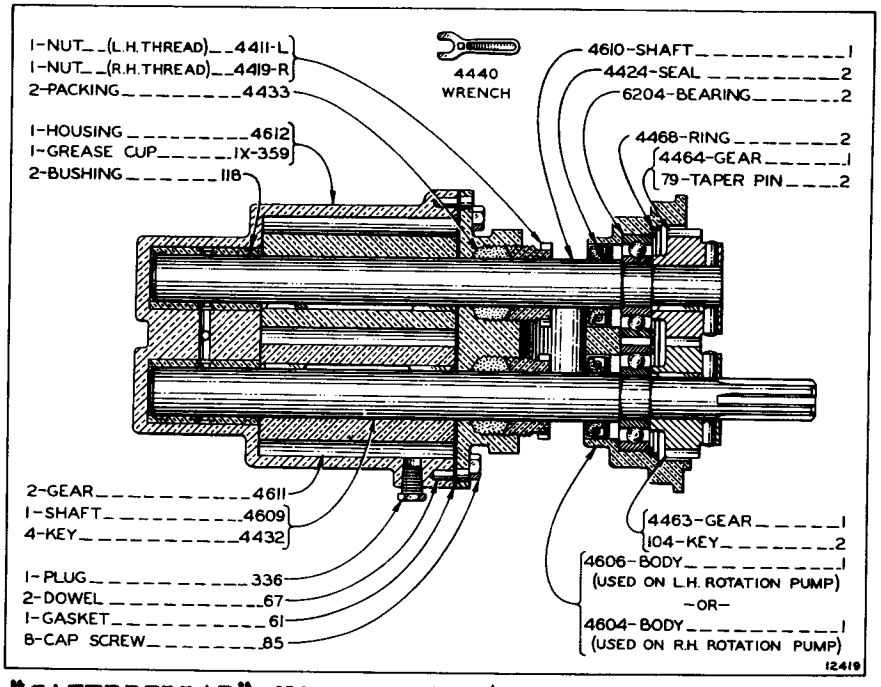


"CATERPILLAR" NO. 5B3326 (Left Hand Rotation)
"CATERPILLAR" NO. 5B4268 (Right Hand Rotation)

NUMBERS SHOWN ARE MANUFACTURERS, NOT "CATERPILLAR" PART NUMBERS, EXCEPT WHEN SPECIFIED.

Form 1736 Printed in U. S. A. Issue 1 1-2-39

# ZENITH CARBURETOR - TYPE K5A, 1¼" NO. 8741

Form 1736 Printed in U. S. A. Issue 1 6-15-39

**Manufacturer**
**ZENITH CARBURETOR CO.**
**696 Hart Avenue**
**Detroit, Michigan**

**For Parts Service on this Carburetor, Order from the Manufacturer or his Representative**




CATERPILLAR NO. 4B6340

NUMBERS SHOWN ARE MANUFACTURERS, NOT "CATERPILLAR" PART NUMBERS, EXCEPT WHEN SPECIFIED.

# ZENITH CARBURETOR - TYPE K5A, 1¼" NO. 8893

**Manufacturer**

**ZENITH CARBURETOR CO.**
**696 Hart Avenue**
**Detroit, Michigan**

**For Parts Service on this Carburetor, Order from the Manufacturer or his Representative**

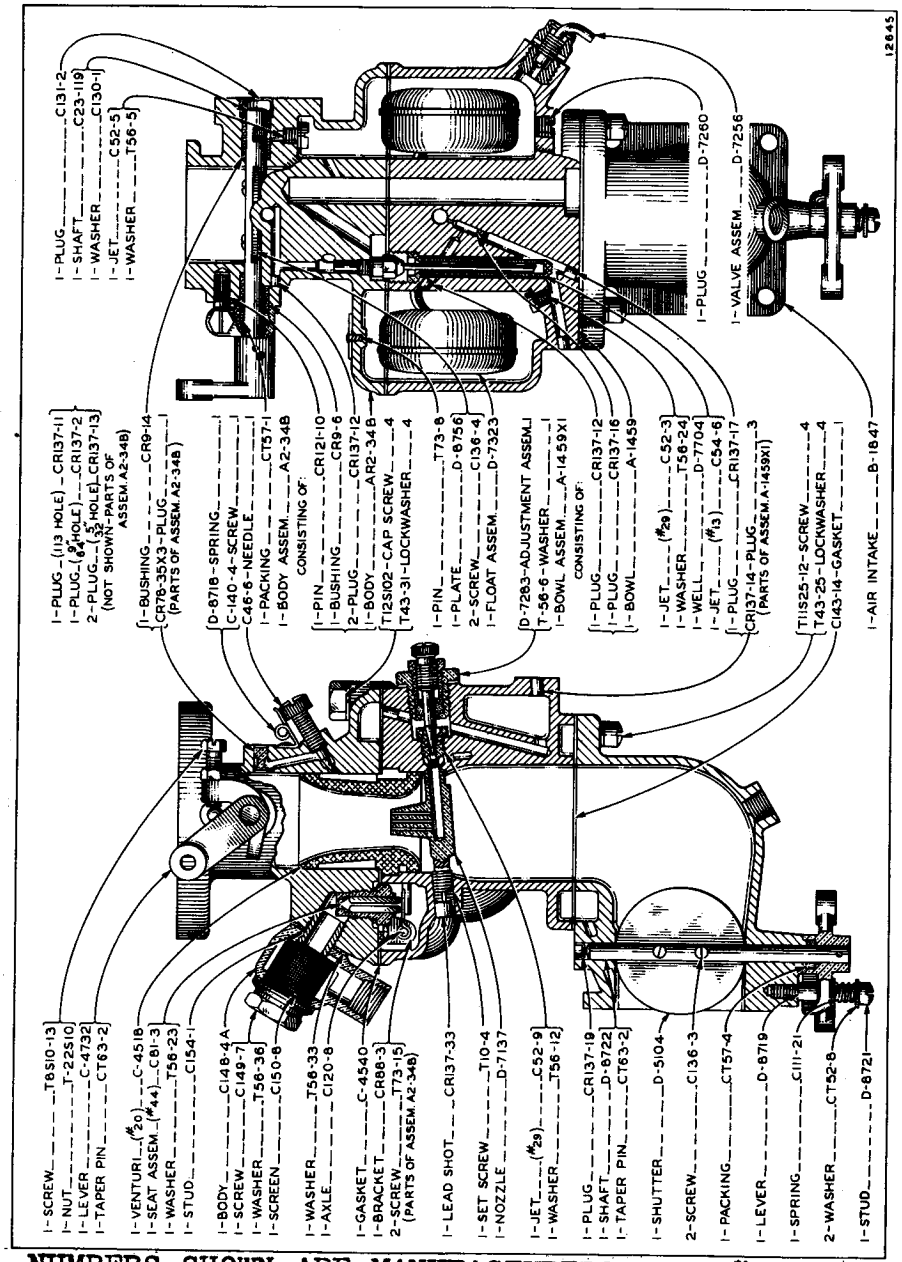


**CATERPILLAR NO. 5B7945**

**NUMBERS SHOWN ARE MANUFACTURERS, NOT "CATERPILLAR" PART NUMBERS, EXCEPT WHEN SPECIFIED.**

Form 1736 Printed in U. S. A. Issue 1 7-1-39

# KELLOGG TIRE PUMP MODEL 42-12970

Manufacturer
KELLOGG COMPRESSOR & MFG. CORP.
Rochester, New York

For Parts Service on this Pump, Order from the Manufacturer or his Representative

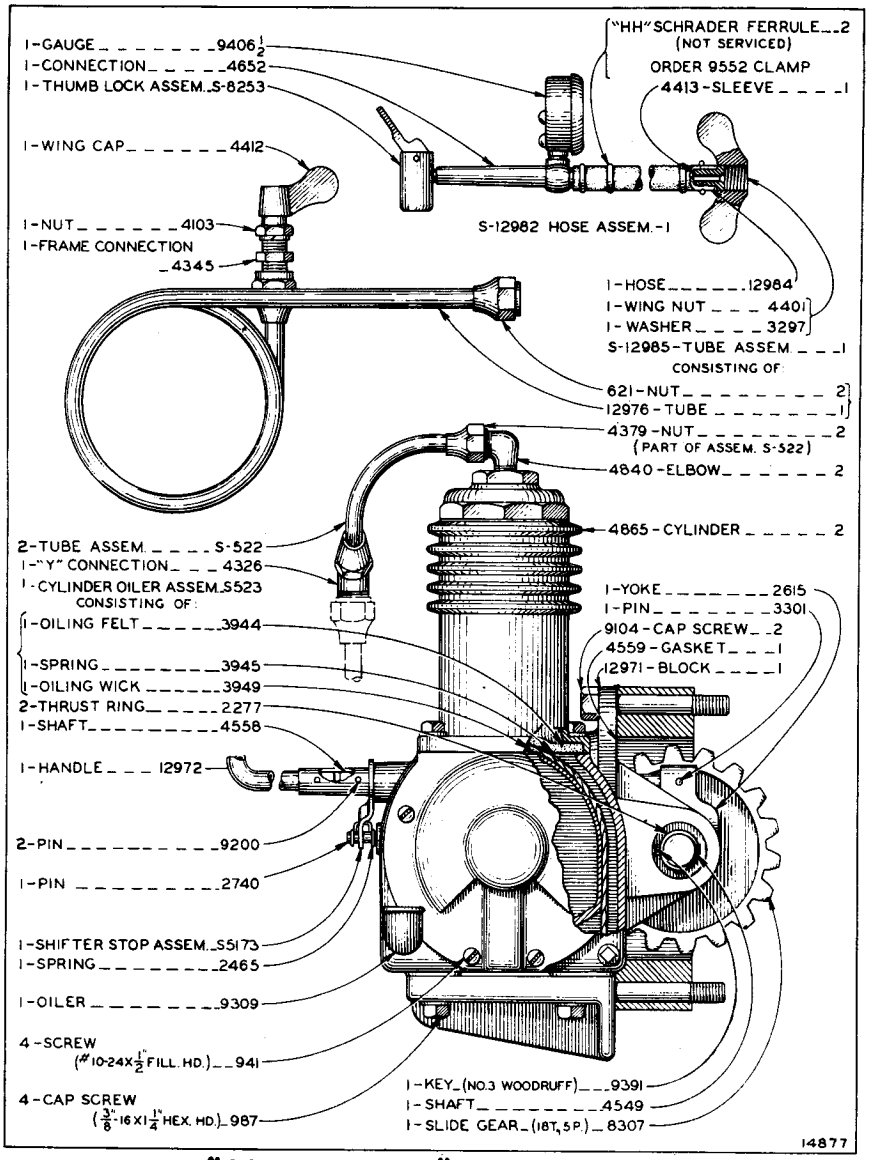


"CATERPILLAR" NO. 5B3421

(Continued on Back of Page)

NUMBERS SHOWN ARE MANUFACTURERS, NOT "CATERPILLAR" PART NUMBERS, EXCEPT WHEN SPECIFIED.

Remove Issue 1 and insert this in it's place.

Form 1736 Printed in U. S. A. Issue 2 8-15-40

NUMBERS SHOWN ARE MANUFACTURERS, NOT "CATERPILLAR" PART NUMBERS, EXCEPT WHEN SPECIFIED.

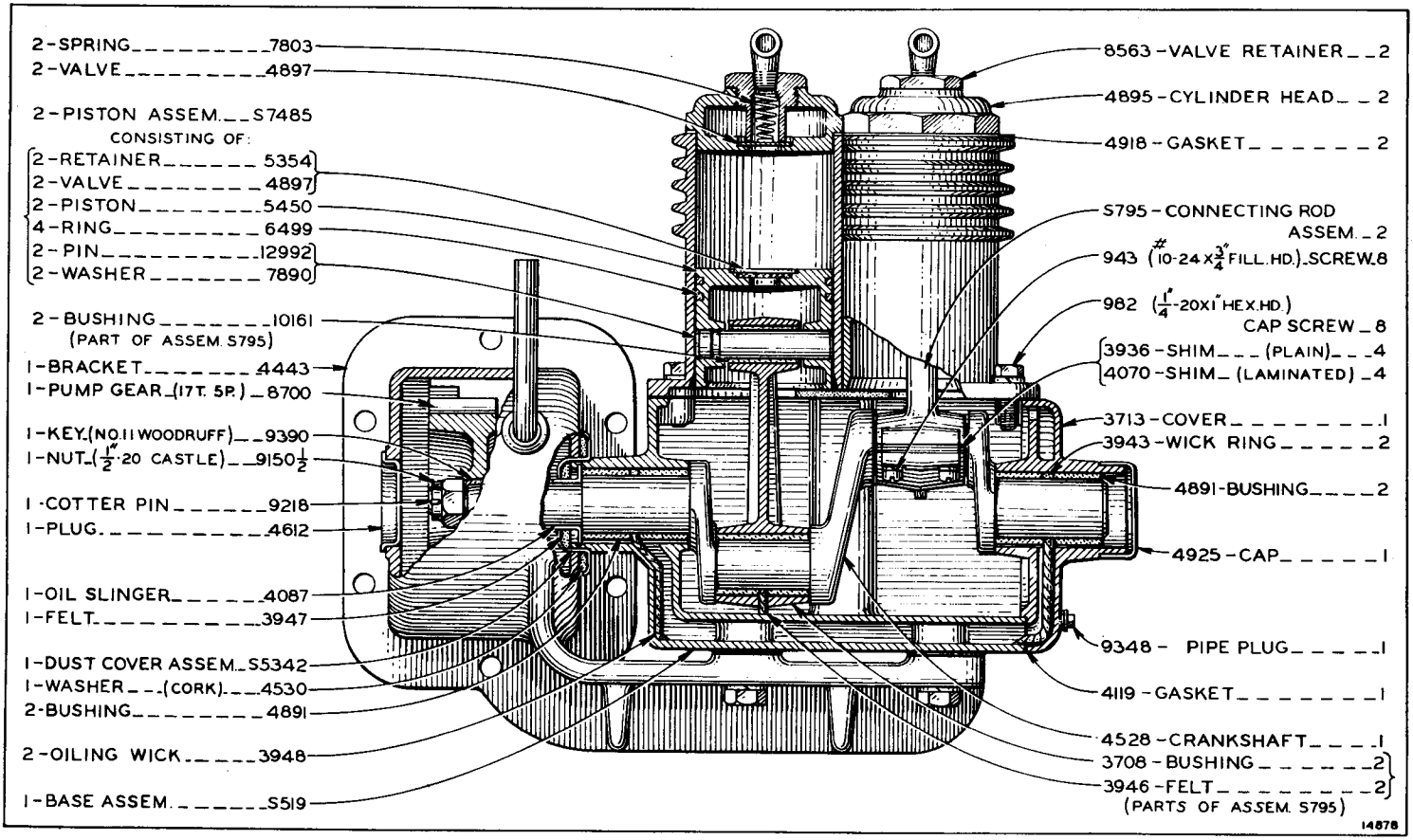

# ZENITH CARBURETOR - TYPE TU-4C No. 7935

Manufacturer
ZENITH CARBURETOR CO.
696 Hart Avenue
Detroit, Michigan

For Parts Service on this Carburetor, Order from the Manufacturer or his Representative

REMOVE ISSUE 1 AND INSERT THIS IN ITS PLACE

Form 1736 Printed in U. S. A. Issue 2 2-1-40

NUMBERS SHOWN ARE MANUFACTURERS, NOT "CATERPILLAR" PART NUMBERS, EXCEPT WHEN SPECIFIED.

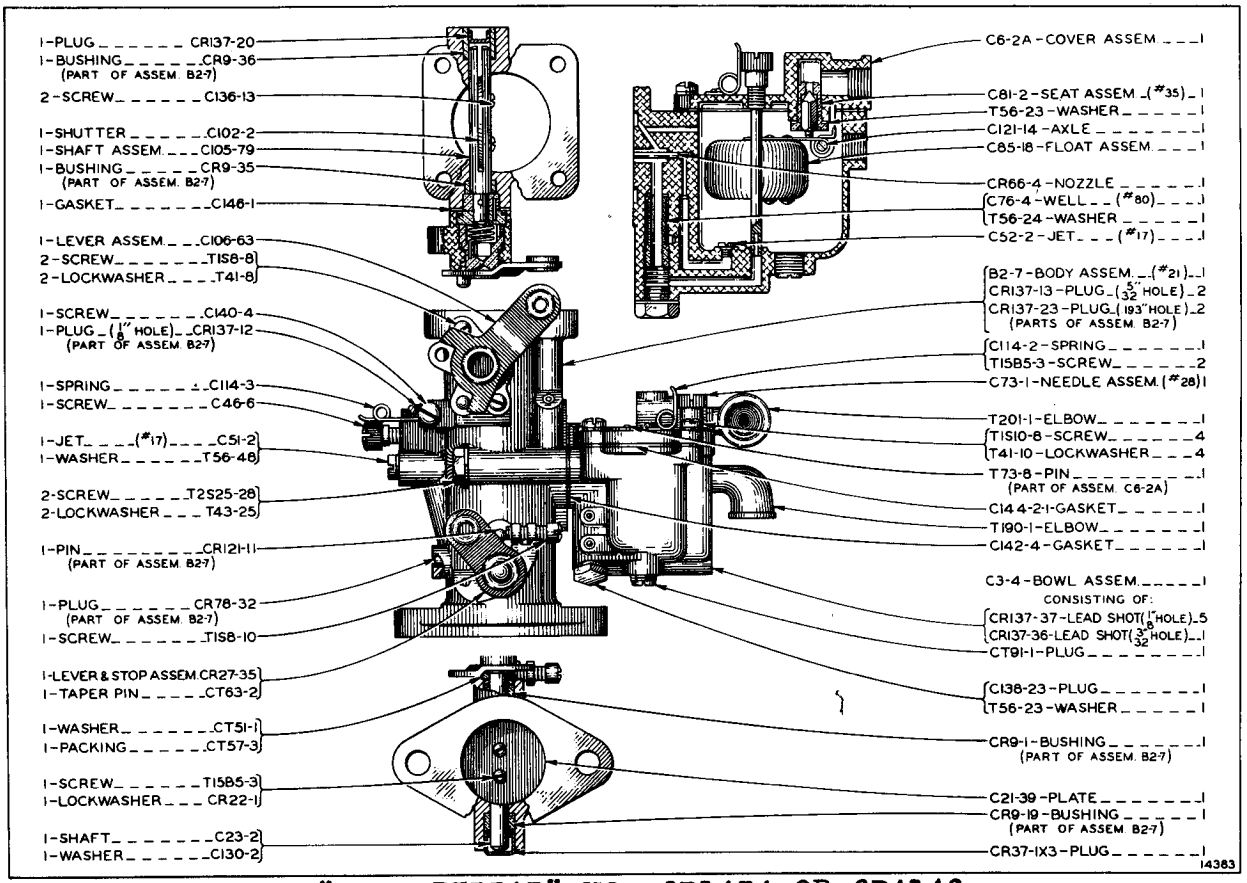


"CATERPILLAR" NO. 6B1434 OR 6B4146

NOTE: SEE BACK OF PAGE FOR C13-4 REPLACEMENT FUEL BOWL ASSEMBLY PARTS.

| | | | |
|---|---|---|---|
| C13-4 | Replacement Fuel Bowl Assembly<br>Consists of: | | |
| 1 | C3-4 | Fuel Bowl Assembly - Well Vent 1.5m/m drill | |
| 1 | C6-2A | Fuel Bowl Cover Assembly | |
| 1 | C142-4 | Bowl to Body Gasket | |
| 1 | C144-2-1 | Bowl to Cover Gasket | |
| 4 | T1S10-8 | Bowl Cover Assembly Screw | |
| 4 | T41-10 | Bowl Cover Assembly Screw Lockwasher | |
| 1 | C73-1 | Jet Adjustment Needle Assembly #28 | |
| 1 | C114-2 | Jet Adjustment Spring | |
| 2 | T15B5-3 | Jet Adjustment Spring Assembly Screw | |
| 1 | C81-2 | Fuel Valve Assembly #35 | |
| 1 | T56-23 | Fuel Valve Fibre Washer | |
| 1 | C121-28 | Float Axle | |
| 1 | C85-18 | Float Assembly | |
| 1 | C76-4 | Metering Well #80 | |
| 1 | T56-24 | Metering Well Fibre Washer | |
| 1 | C52-2 | Comp. Jet #17 | |
| 1 | CT91-1 | Drain Plug (1/8 Pipe) | |
| 1 | C138-23 | Lower Plug | |
| 1 | T56-23 | Lower Plug Fibre Washer | |
| 1 | T190-1 | Overflow Elbow | |
| 1 | T201-1 | Gas Inlet Elbow | |

# EISEMANN IMPULSE STARTER No. 23910

**Manufacturer**
**EISEMANN MAGNETO CORPORATION**
**60 East 42 Street, New York, N. Y.**

**For Parts Service on this Impulse Starter Order from the Manufacturer or his Representative**

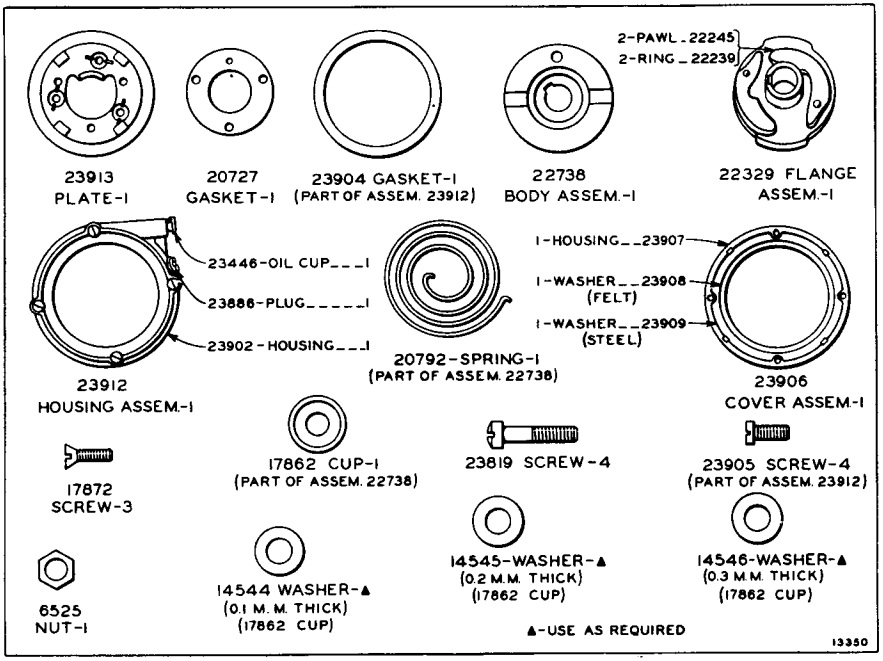


**NO. 23910 IMPULSE STARTER**

Form 1736 Printed in U. S. A. Issue 1 10-1-39

NUMBERS SHOWN ARE MANUFACTURERS, NOT "CATERPILLAR" PART NUMBERS, EXCEPT WHEN SPECIFIED.

# DELCO-REMY GENERATOR MODEL 968-W

Manufacturer
DELCO-REMY CORPORATION
Anderson, Indiana

For Parts Service on this Generator, Order from United Motors Service Corp. or their Representative

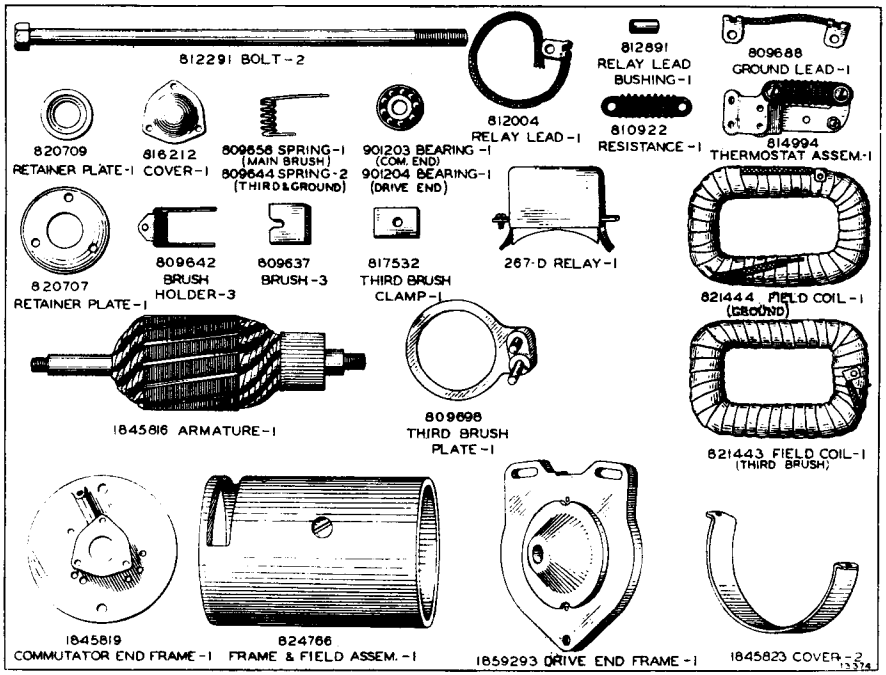


"CATERPILLAR" NO. 1B5240

(Note: List of Parts not shown in this illustration on back of page.)

NUMBERS SHOWN ARE MANUFACTURERS, NOT "CATERPILLAR" PART NUMBERS, EXCEPT WHEN SPECIFIED.

Form 1736 Printed in U. S. A. Issue 1 10-1-39

## PARTS NOT SHOWN IN ILLUSTRATION

| Quantity | Part No. | Description |
|---|---|---|
| 3 | 802731 | Lockwasher - Ball Bearing Retainer Plate Screw |
| 3 | 802730 | Lockwasher - Brush Lead Terminal Screw |
| 3 | 106495 | Lockwasher - Brush Attaching Screw |
| 3 | 106497 | Lockwasher - End Cover Plate Screw |
| 2 | 802729 | Lockwasher - Relay Mounting Screw |
| 1 | 106497 | Lockwasher - Third Brush Plate Clamp Screw |
| 2 | 802730 | Lockwasher - Thermostat Resistance Attaching Screw |
| 2 | 106495 | Lockwasher - Thermostat Attaching Screw |
| 1 | 802730 | Lockwasher - Thermostat Terminal Screw |
| 1 | 103047 | Nut - Shaft-D.E. |
| 3 | 115431 | Screw - Ball Bearing Retainer Plate |
| 3 | 1862803 | Screw - Brush Attaching |
| 3 | 141540 | Screw - Brush Lead Attaching |
| 2 | 1866487 | Screw - Cover Band |
| 3 | 115431 | Screw - End Cover Plate |
| 2 | 828675 | Screw - Pole Shoe |
| 2 | 115436 | Screw - Relay Mounting |
| 1 | 141540 | Screw - Thermostat Terminal |
| 2 | 141541 | Screw - Thermostat Resistance Attaching |
| 1 | 141543 | Screw - Third Brush Plate Clamp |
| 3 | 809551 | Washer - Brush Attaching Screw |
| 1 | 820706 | Washer - Felt-D.E. |
| 1 | 811381 | Washer - Shaft Nut |
| 1 | 822644 | Washer - Space-Inside-D.E. |
| 1 | 809824 | Washer - Third Brush Plate Spring |
| 1 | 817313 | Pin - Brush Holder |
| 1 | 812016 | Pin - Brush Holder and Insulation |
| 1 | 817314 | Pin - Brush Holder Stop |
| 1 | 812015 | Pin - Brush Holder Stop and Insulation |
| 1 | 809614 | Pin - Third Brush Spring Washer |
| 1 | 1845822 | Collar - Oil Throwing-Outside-D.E. |
| 1 | 809593 | Dowel - Pin-D.E. |
| 1 | 809062 | Dowel - Pin-C.E. |
| 1 | 820708 | Gasket - Ball Bearing Plate-D.E. |
| 1 | 1835457 | Gasket - End Cover Plate |
| 1 | 820547 | Baffle - Oil |
| 1 | 113702 | Oiler-D.E. |
| 1 | 114998 | Oiler-C.E. |
| 1 | 802692 | Wick - Oil-C.E. |
| 2 | 816323 | Shoe - Pole |
| 2 | 1857107 | Clip - Terminal-To Brush |
| 1 | 833684 | Clip - Relay or Field Terminal |
| 1 | 103906 | Key |

NUMBERS SHOWN ARE MANUFACTURERS, NOT "CATERPILLAR" PART NUMBERS, EXCEPT WHEN SPECIFIED.

# DONALDSON AIR CLEANER MODEL A-867

Manufacturer
DONALDSON COMPANY, Inc.
666 Pelham Street
Saint Paul, Minn.

For Parts Service on this Air Cleaner, order from the Caterpillar Tractor Co., Peoria, Ill., or San Leandro, Cal.

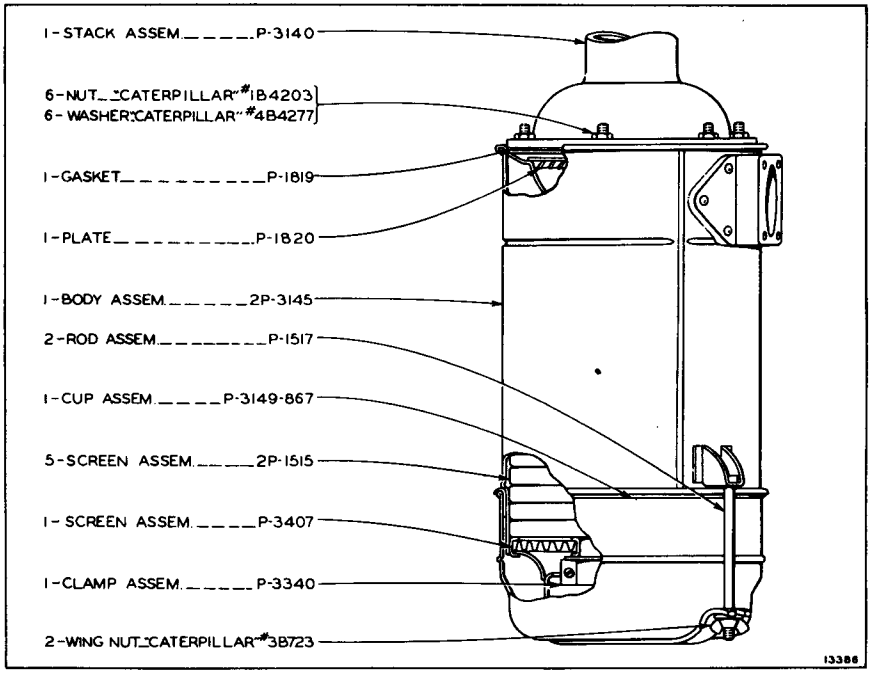


"CATERPILLAR" NO. 6B3632

NUMBERS SHOWN ARE MANUFACTURERS, NOT "CATERPILLAR" PART NUMBERS, EXCEPT WHEN SPECIFIED.

Form 1736 Printed in U. S. A. Issue 1 11-1-39

# ZENITH CARBURETOR - TYPE 22AX8 No. 7580

**Manufacturer**
**ZENITH CARBURETOR CO.**
696 Hart Avenue
Detroit, Michigan

**For Parts Service on this Carburetor, Order from the Manufacturer or his Representative**

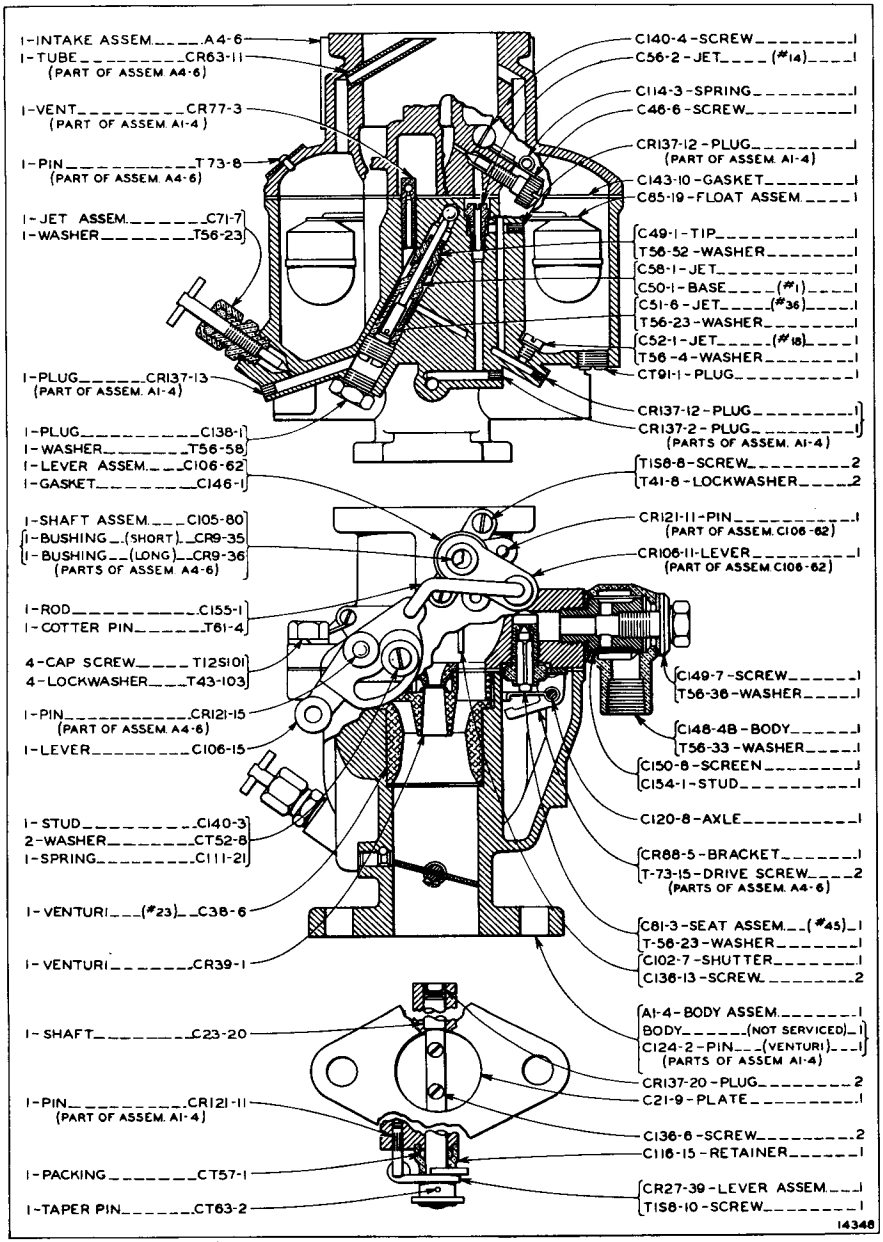


"CATERPILLAR NO. 6B1869
NUMBERS SHOWN ARE MANUFACTURERS, NOT "CATERPILLAR" PART NUMBERS, EXCEPT WHEN SPECIFIED.

REMOVE ISSUE 1 AND INSERT THIS IN ITS PLACE.

Form 1736 Printed in U. S. A. Issue 2 3-1-40

# ZENITH CARBURETOR - TYPE 22AX8 No. 7782

Manufacturer
ZENITH CARBURETOR CO.
696 Hart Avenue
Detroit, Michigan

For Parts Service on this Carburetor, Order from the Manufacturer or his Representative

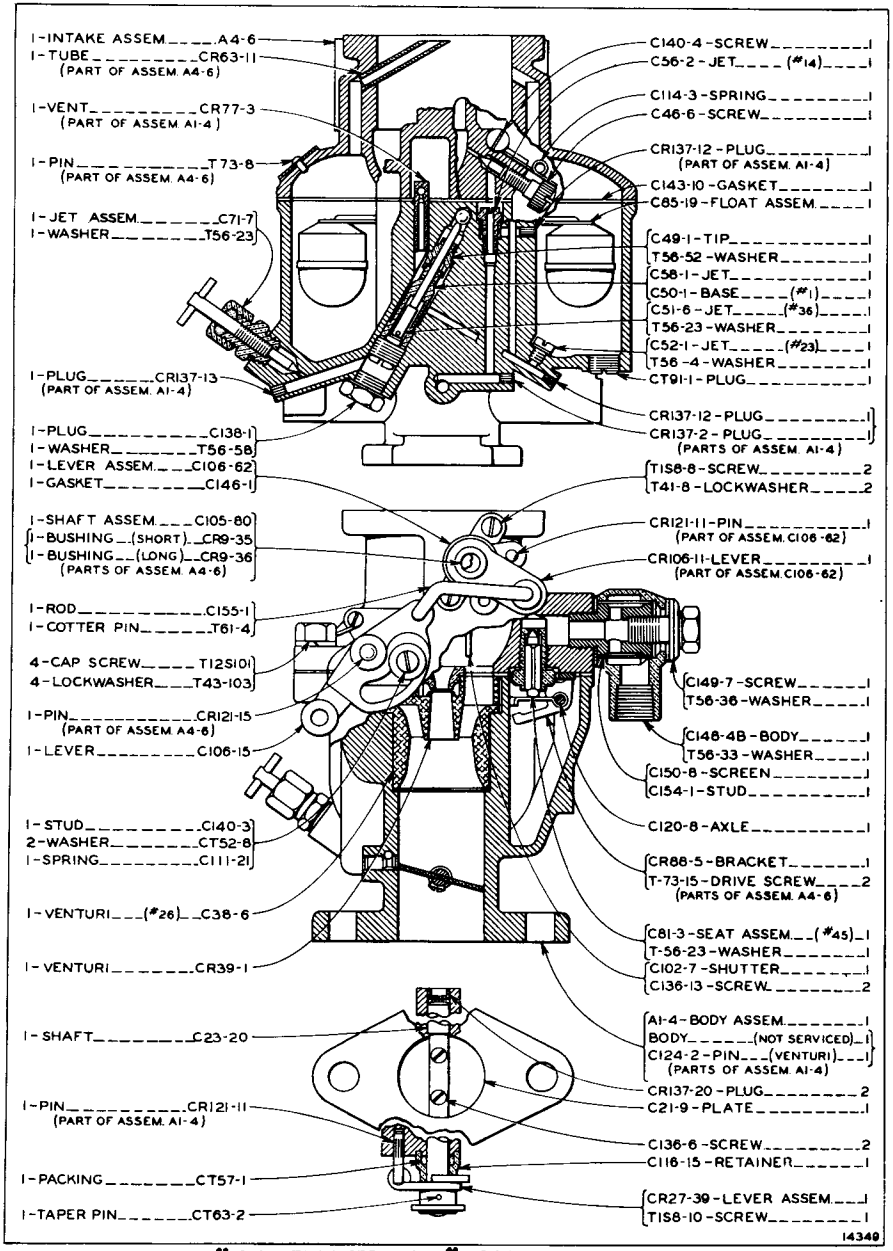


"CATERPILLAR" NO. 6B2013

NUMBERS SHOWN ARE MANUFACTURERS, NOT "CATERPILLAR" PART NUMBERS, EXCEPT WHEN SPECIFIED.

REMOVE ISSUE 1 AND INSERT THIS IN ITS PLACE.

Form 1736 Printed in U. S. A. Issue 2 3-1-40

# ZENITH CARBURETOR - TYPE 22AX8 No. 8408

Manufacturer
ZENITH CARBURETOR CO.
696 Hart Avenue
Detroit, Michigan

For Parts Service on this Carburetor, Order from the Manufacturer or his Representative

REMOVE ISSUE 1 AND INSERT THIS IN ITS PLACE

Form 1736 Printed in U. S. A. Issue 2 2-1-40

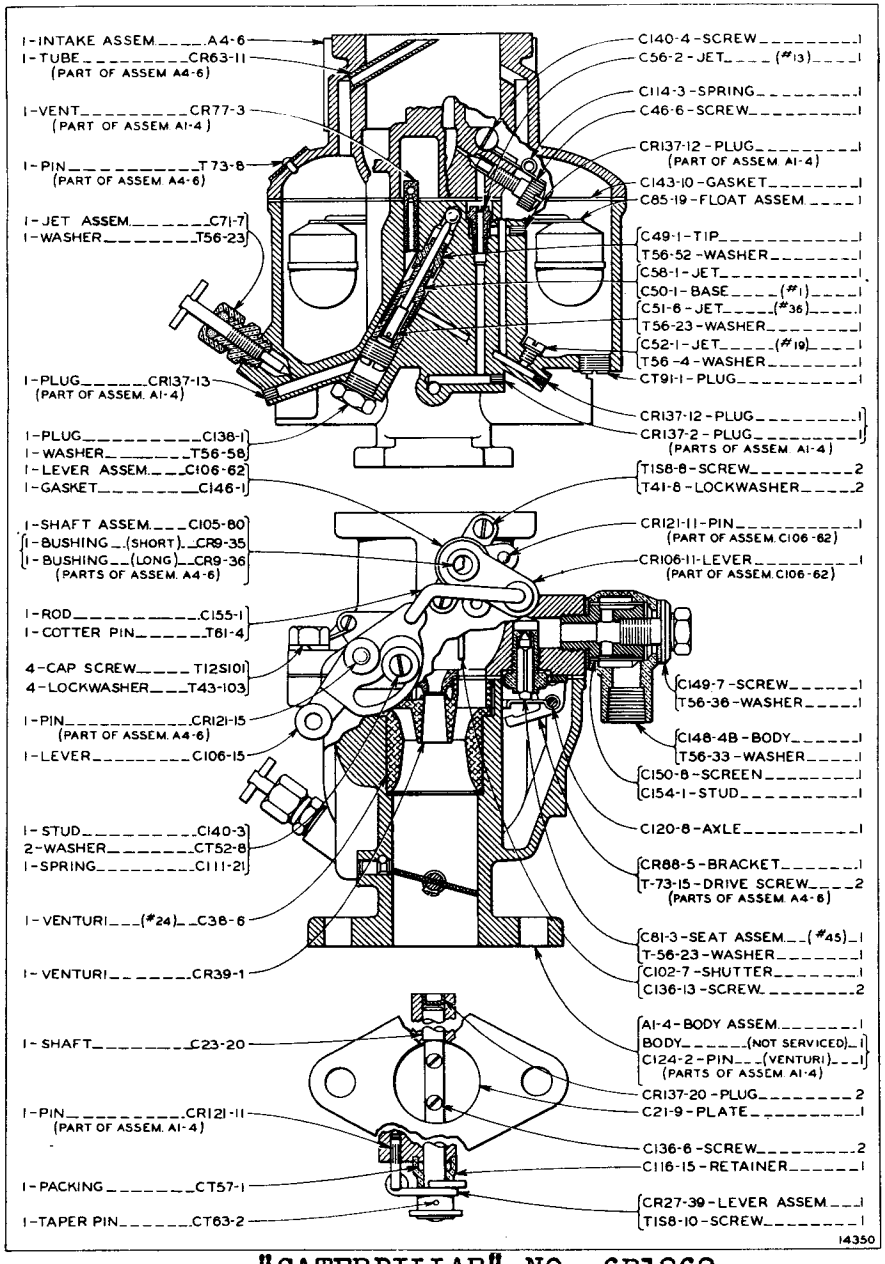


"CATERPILLAR" NO. 6B1868

NUMBERS SHOWN ARE MANUFACTURERS, NOT "CATERPILLAR" PART NUMBERS, EXCEPT WHEN SPECIFIED.

# ZENITH CARBURETOR - TYPE TU-4C No. 8431

Manufacturer
ZENITH CARBURETOR CO.
696 Hart Avenue
Detroit, Michigan

For Parts Service on this Carburetor, Order from the Manufacturer or his Representative

REMOVE ISSUE 1 AND INSERT THIS IN ITS PLACE

Form 1736 Printed in U. S. A. Issue 2 2-1-40

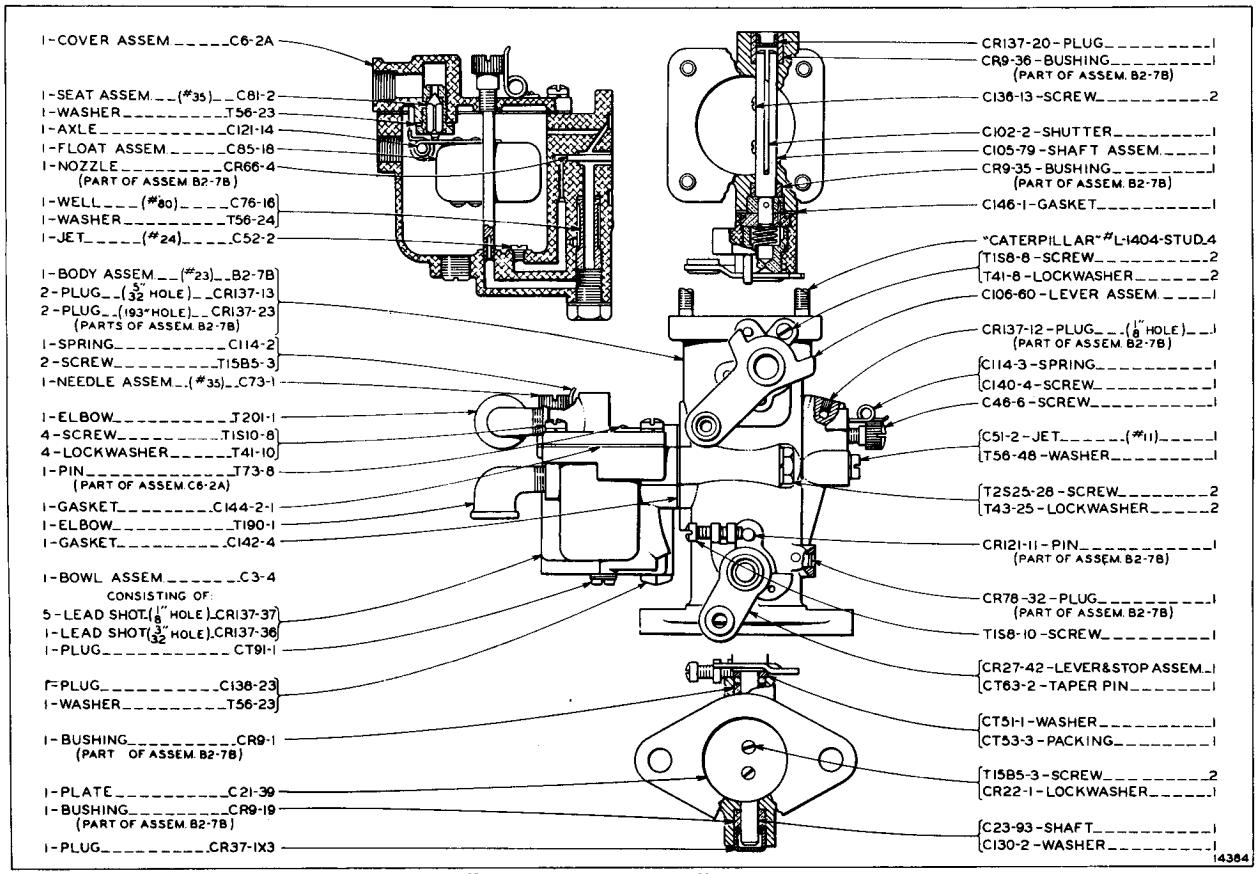


"CATERPILLAR" NO. 6B1739

NOTE: SEE BACK OF PAGE FOR C13-4-1 REPLACEMENT FUEL BOWL ASSEMBLY PARTS.

NUMBERS SHOWN ARE MANUFACTURERS, NOT "CATERPILLAR" PART NUMBERS, EXCEPT WHEN SPECIFIED.

C13-4-1 Replacement Fuel Bowl Assembly
Consists of:

| | | |
|---|---|---|
| 1 | C3-4 | Fuel Bowl Assembly - Well Vent 1.5m/m drill |
| 1 | C6-2A | Fuel Bowl Cover Assembly |
| 1 | C142-4 | Bowl to Body Gasket |
| 1 | C144-2-1 | Bowl to Cover Gasket |
| 4 | T1S10-8 | Bowl Cover Assembly Screw |
| 4 | T41-10 | Bowl Cover Assembly Screw Lockwasher |
| 1 | C73-1 | Jet Adjustment Needle Assembly #35 |
| 1 | C114-2 | Jet Adjustment Spring |
| 2 | T15B5-3 | Jet Adjustment Spring Assembly Screw |
| 1 | C81-2 | Fuel Valve Assembly #35 |
| 1 | T56-23 | Fuel Valve Fibre Washer |
| 1 | C121-28 | Float Axle |
| 1 | C85-18 | Float Assembly |
| 1 | C76-16 | Metering Well #80 |
| 1 | T56-24 | Metering Well Fibre Washer |
| 1 | C52-2 | Comp. Jet #24 |
| 1 | CT91-1 | Drain Plug (1/8 pipe) |
| 1 | C138-23 | Lower Plug |
| 1 | T56-23 | Lower Plug Fibre Washer |
| 1 | T190-1 | Overflow Elbow |
| 1 | T201-1 | Gas Inlet Elbow |

REMOVE ISSUE 1 AND INSERT THIS IN ITS PLACE

Form 1736 Printed in U. S. A. Issue 2 2-1-40



# ZENITH CARBURETOR - TYPE TU-4C No. 7843

Manufacturer
ZENITH CARBURETOR CO.
696 Hart Avenue
Detroit, Michigan

For Parts Service on this Carburetor, Order from the Manufacturer or his Representative

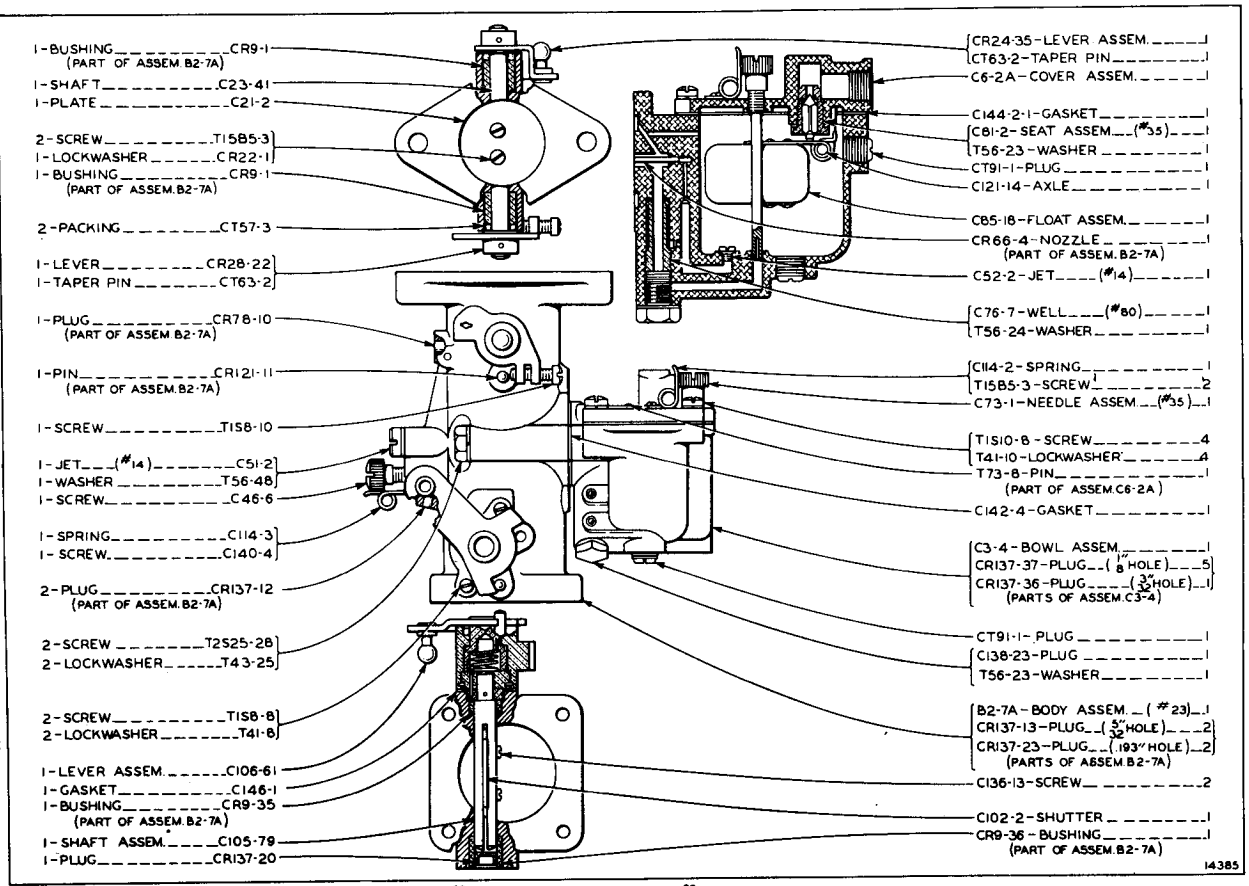


"CATERPILLAR" NO. 6B2014

NOTE: SEE BACK OF PAGE FOR C13-4-2 REPLACEMENT FUEL BOWL ASSEMBLY PARTS.

NUMBERS SHOWN ARE MANUFACTURERS, NOT "CATERPILLAR" PART NUMBERS, EXCEPT WHEN SPECIFIED.

C13-4-2 Replacement Fuel Bowl Assembly.
Consists of:

| | | |
|---|---|---|
| 1 | C3-4 | Fuel Bowl Assembly - Well Vent 1.5m/m drill |
| 1 | C6-2A | Fuel Bowl Cover Assembly |
| 1 | C142-4 | Bowl to Body Gasket |
| 1 | C144-2-1 | Bowl to Cover Gasket |
| 4 | T1S10-8 | Bowl Cover Assembly Screw |
| 4 | T41-10 | Bowl Cover Assembly Screw Lockwasher |
| 1 | C73-1 | Jet Adjustment Needle Assembly #35 |
| 1 | C114-2 | Jet Adjustment Spring |
| 2 | T15B5-3 | Jet Adjustment Spring Assembly Screw |
| 1 | C81-2 | Fuel Valve Assembly #35 |
| 1 | T56-23 | Fuel Valve Fibre Washer |
| 1 | C121-28 | Float Axle |
| 1 | C85-18 | Float Assembly |
| 1 | C76-7 | Metering Well #80 |
| 1 | T56-24 | Metering Well Fibre Washer |
| 1 | C52-2 | Comp. Jet - Blank |
| 1 | CT91-1 | Drain Plug (1/8 pipe) |
| 1 | C138-23 | Lower Plug |
| 1 | T56-23 | Lower Plug Fibre Washer |
| 1 | CT91-1 | Overflow Plug (1/8 pipe) |

# ZENITH CARBURETOR - TYPE K5A, 1¼" NO. 9182

**Manufacturer**

**ZENITH CARBURETOR CO.**
**696 Hart Avenue**
**Detroit, Michigan**

**For Parts Service on this Carburetor, Order from the Manufacturer or his Representative**

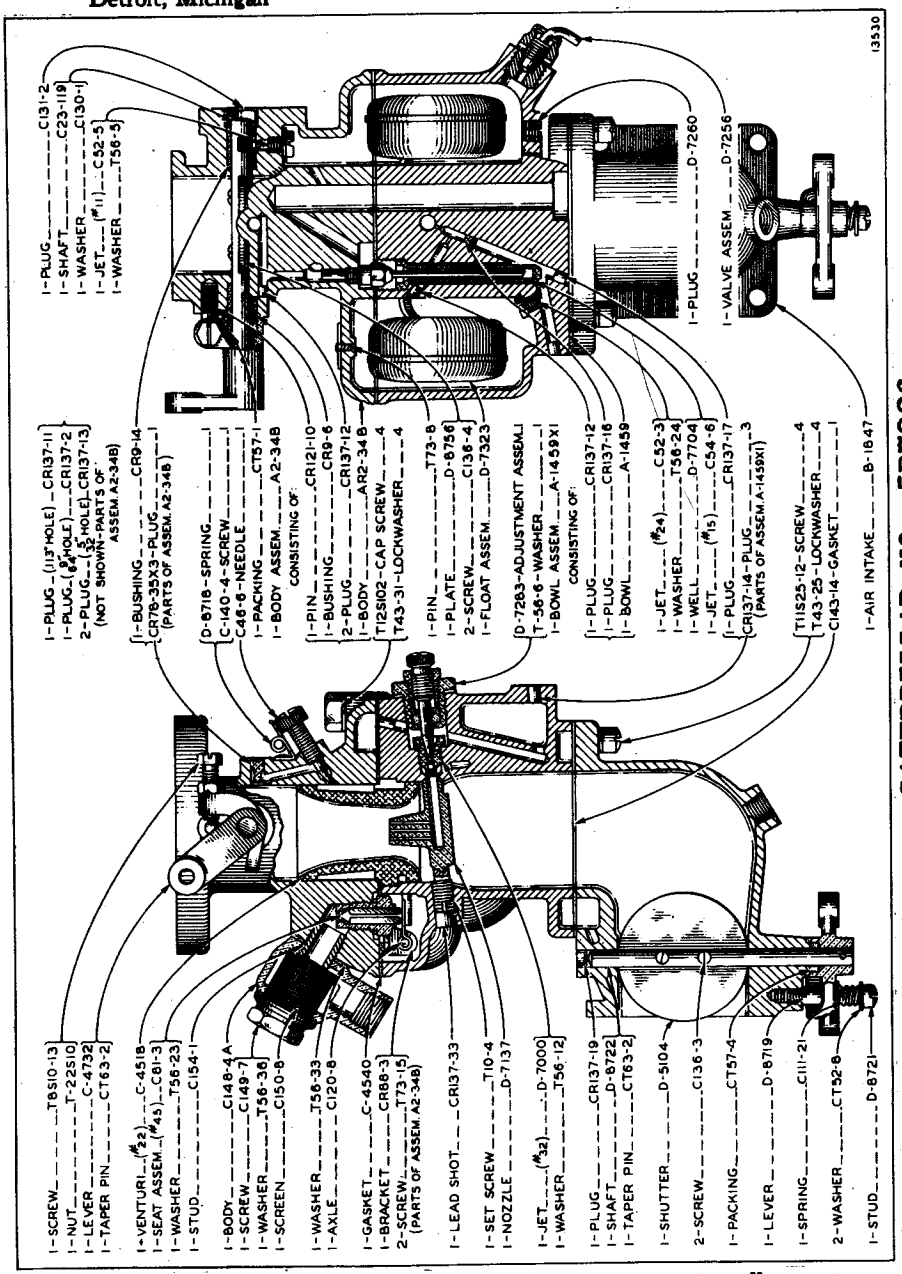


**NUMBERS SHOWN ARE MANUFACTURERS, NOT "CATERPILLAR" PART NUMBERS, EXCEPT WHEN SPECIFIED.**

CATERPILLAR NO. 5B7986

Form 1736 Printed in U. S. A. Issue 1 7-1-39

# BLOOD BROTHERS UNIVERSAL JOINT

Manufacturer
BLOOD BROTHERS MACHINE CO.
Allegan, Mich.

For Parts Service on this Universal Joint order from the Caterpillar Tractor Co., Peoria, Ill.

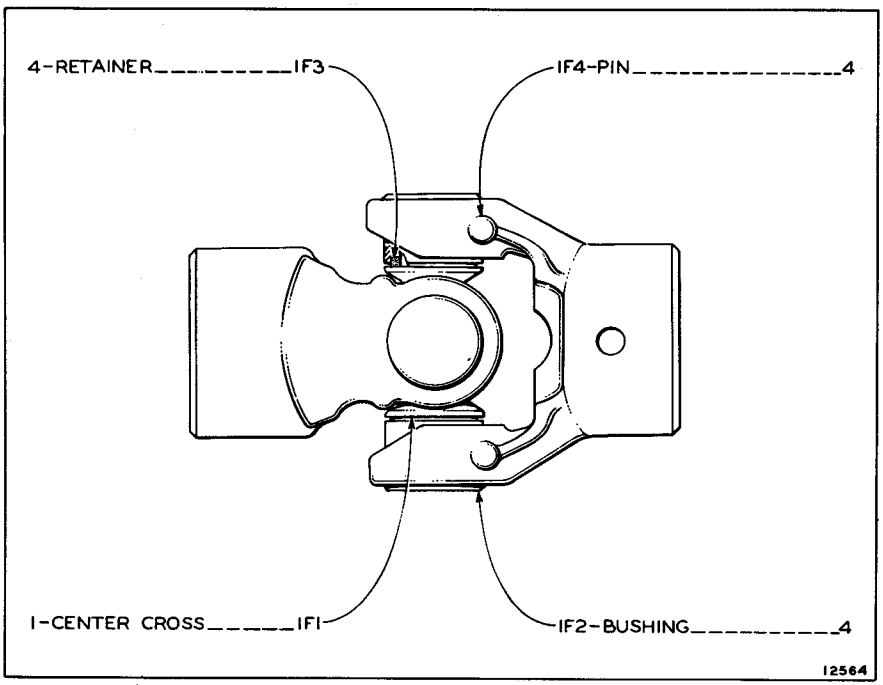


"CATERPILLAR" NO. 5B1018 (First Type)

Form 1736 Printed in U. S. A. Issue 1 11-1-39

NUMBERS SHOWN ARE MANUFACTURERS, NOT "CATERPILLAR" PART NUMBERS, EXCEPT WHEN SPECIFIED.

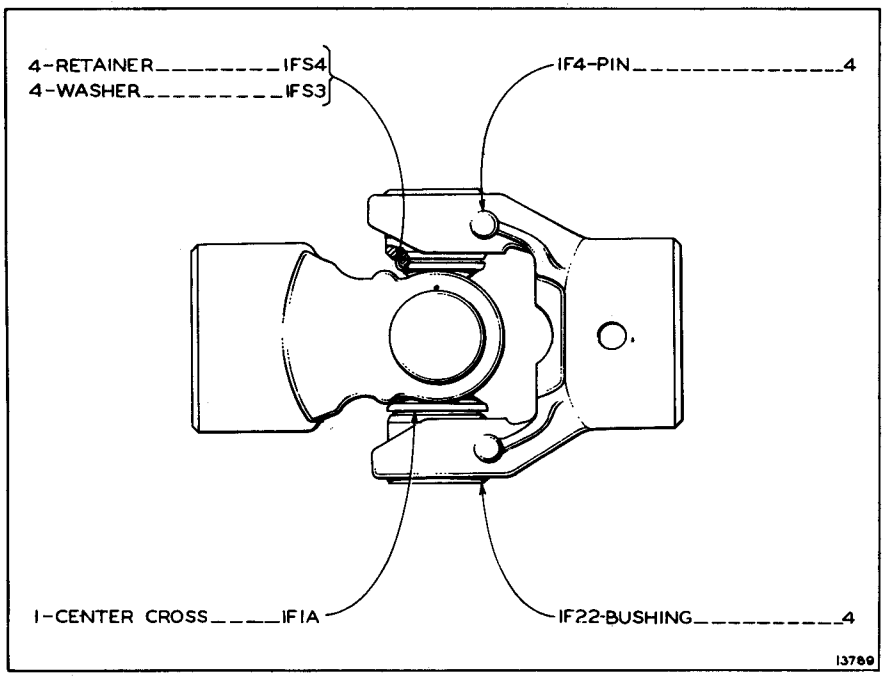


"CATERPILLAR" NO. 5B1018 (Second Type)

# BLOOD BROTHERS UNIVERSAL JOINT

Manufacturer
BLOOD BROTHERS MACHINE CO.
Allegan, Mich.

For Parts Service on this Universal Joint order from the Caterpillar Tractor Co., Peoria, Ill.

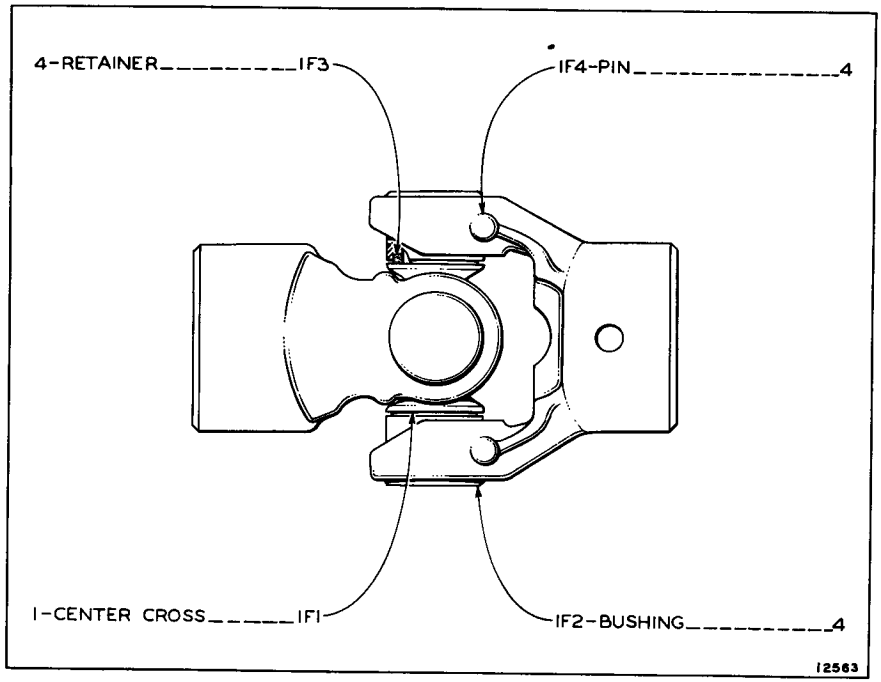


"CATERPILLAR" NO. 5B1016 (First Type)

Form 1736 Printed in U. S. A. Issue 1 11-1-39

NUMBERS SHOWN ARE MANUFACTURERS, NOT "CATERPILLAR" PART NUMBERS, EXCEPT WHEN SPECIFIED.

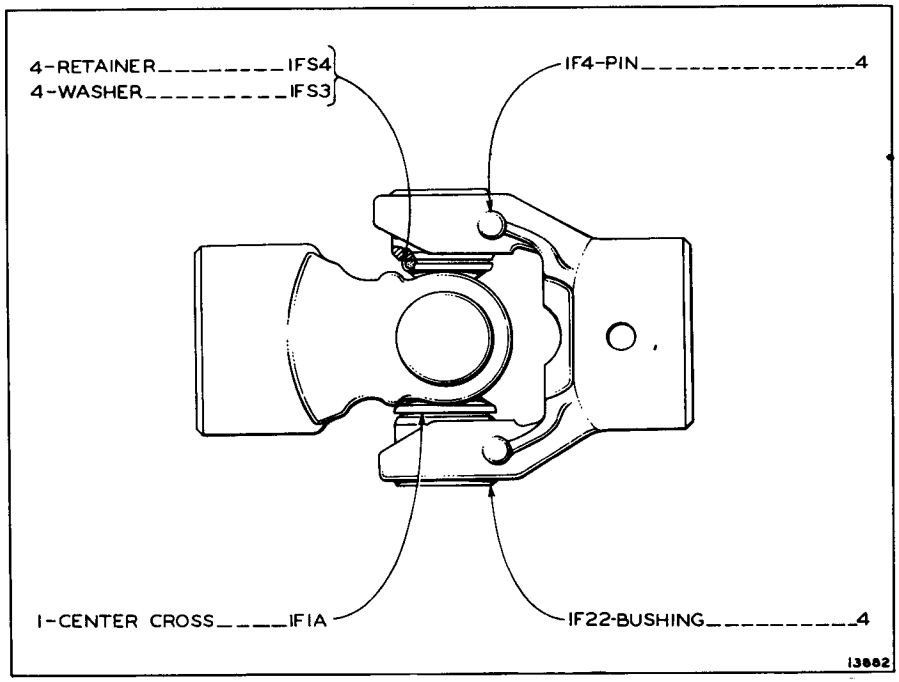


"CATERPILLAR" NO. 5B1016 (Second Type)

# EISEMANN MAGNETO MODEL RC-2Q

**Manufacturer**
**EISEMANN MAGNETO CORPORATION**
**60 East 42 Street - New York, N. Y.**

**For Parts Service on this Magneto Order from the Manufacturer or his Representative**

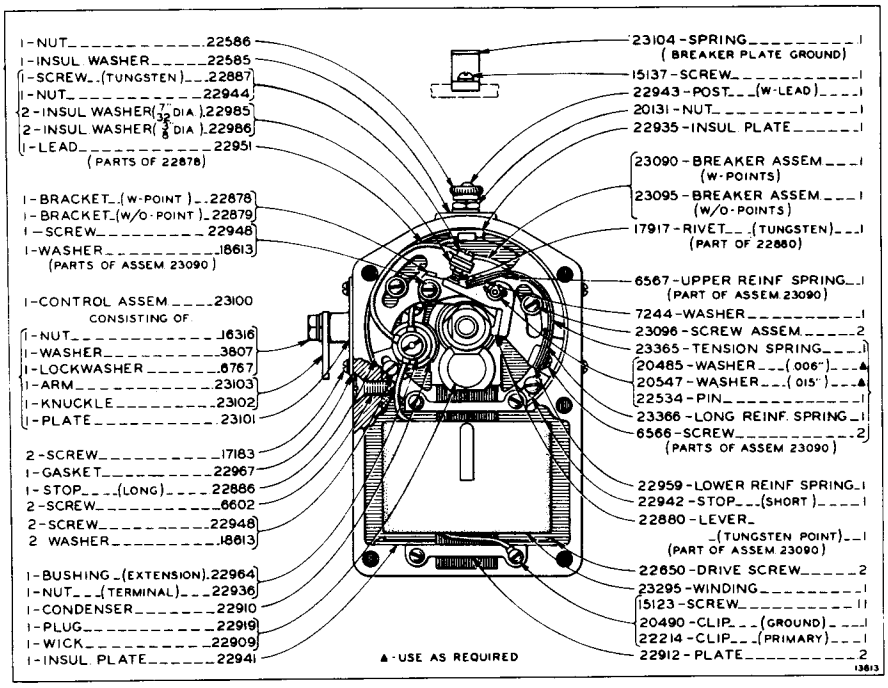


MAGNETO PARTS

"Caterpillar" No. 6B1566 Magneto
Consists of:
Magneto Parts . . . . . Shown on this Page
1-23911 Impulse Starter. . . . . Page 280
1-23378 Drive Hub (Non-Adjustable)
1-21813 Floating Disc

---

"Caterpillar" No. 6B1598 Magneto
Consists of:
Magneto Parts . . . . . Shown on this Page
1-23911 Impulse Starter. . . . . Page 280
1-21974 Drive Hub Assembly (Adjustable)
1-21813 Floating Disc

NUMBERS SHOWN ARE MANUFACTURERS, NOT "CATERPILLAR" PART NUMBERS, EXCEPT WHEN SPECIFIED.

Form 1736 Printed in U. S. A. Issue 1 1-15-40

NUMBERS SHOWN ARE MANUFACTURERS', NOT "CATERPILLAR" PART NUMBERS, EXCEPT WHEN SPECIFIED.

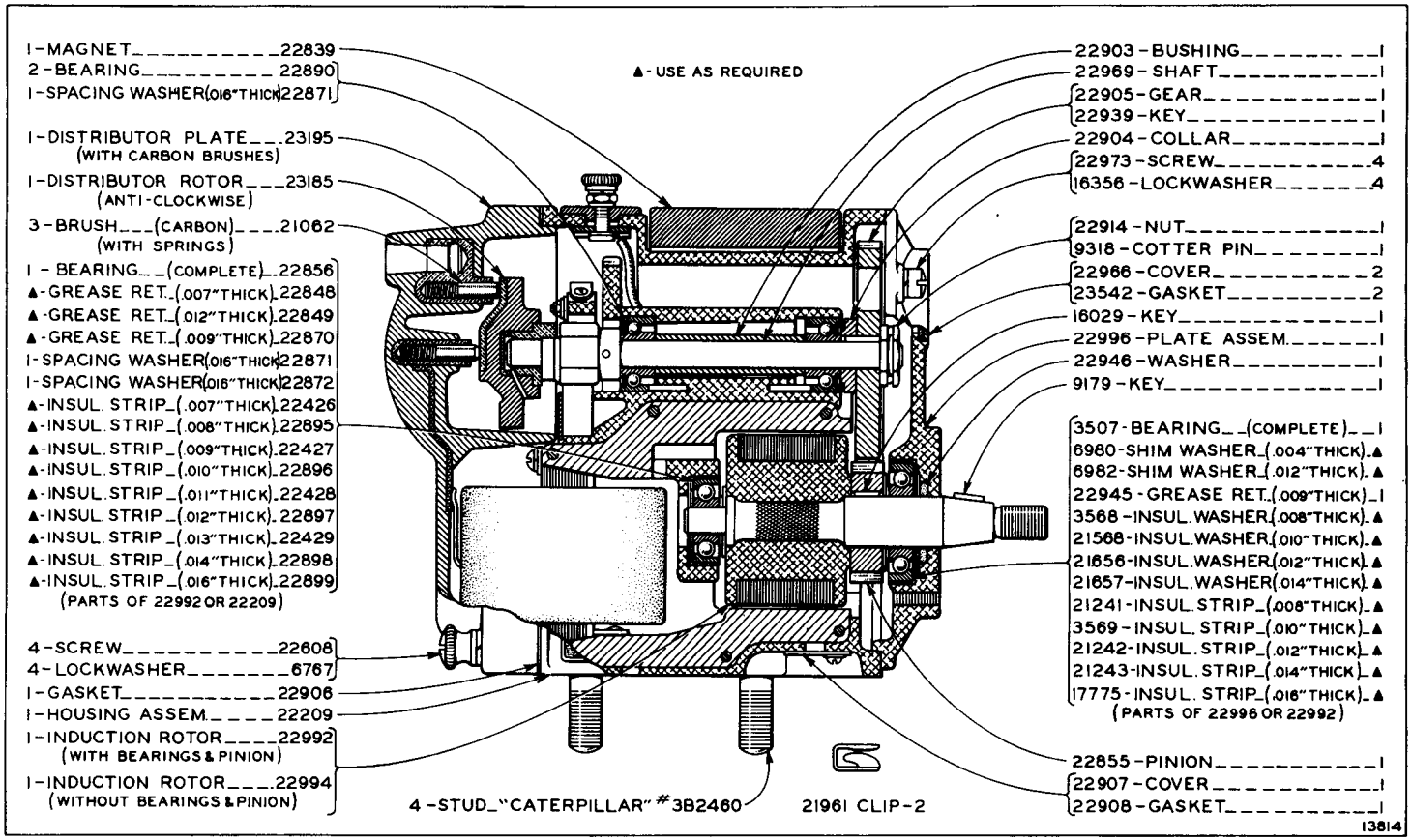


MAGNETO PARTS

# EISEMANN MAGNETO MODEL RC-2Q

Manufacturer
EISEMANN MAGNETO CORPORATION
60 East 42 Street - New York, N. Y.

For Parts Service on this Magneto Order from the Manufacturer or his Representative

Form 1736 Printed in U. S. A. Issue 1 1-15-40

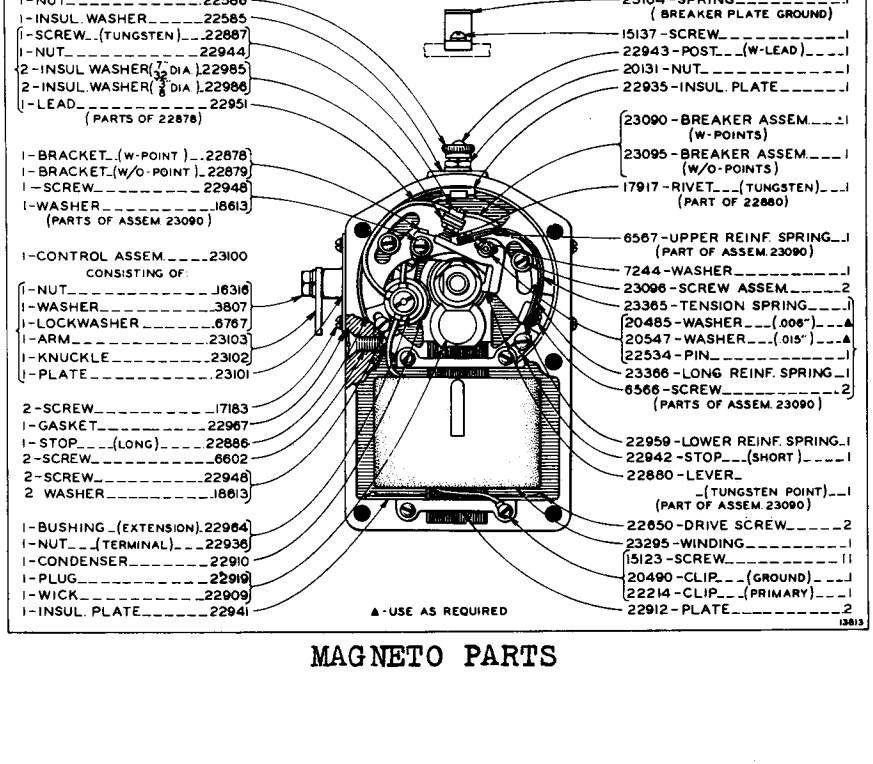


MAGNETO PARTS

**"Caterpillar" No. 6B2756 Magneto**
**Consists of:**
**Magneto Parts . . . . . Shown on this Page**
**1-23444 Impulse Starter. . . . . Page 251**
**1-23441 Drive Hub (Non-Adjustable)**

NUMBERS SHOWN ARE MANUFACTURERS, NOT "CATERPILLAR" PART NUMBERS, EXCEPT WHEN SPECIFIED.

NUMBERS SHOWN ARE MANUFACTURERS, NOT "CATERPILLAR" PART NUMBERS, EXCEPT WHEN SPECIFIED.

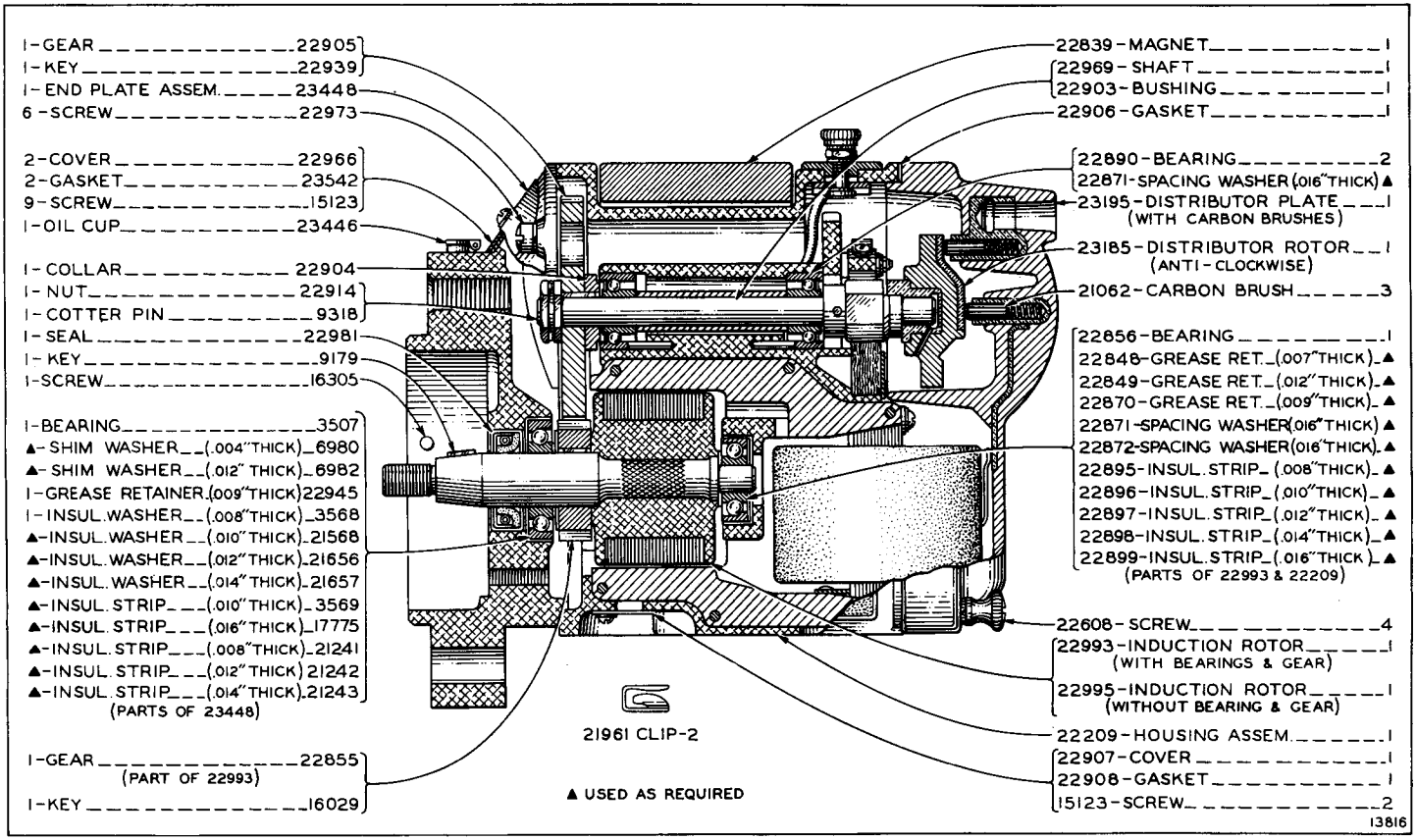


MAGNETO PARTS

# EISEMANN MAGNETO MODEL RC-2Q

Manufacturer
**EISEMANN MAGNETO CORPORATION**
60 East 42 Street - New York, N. Y.

**For Parts Service on this Magneto Order from the Manufacturer or his Representative**

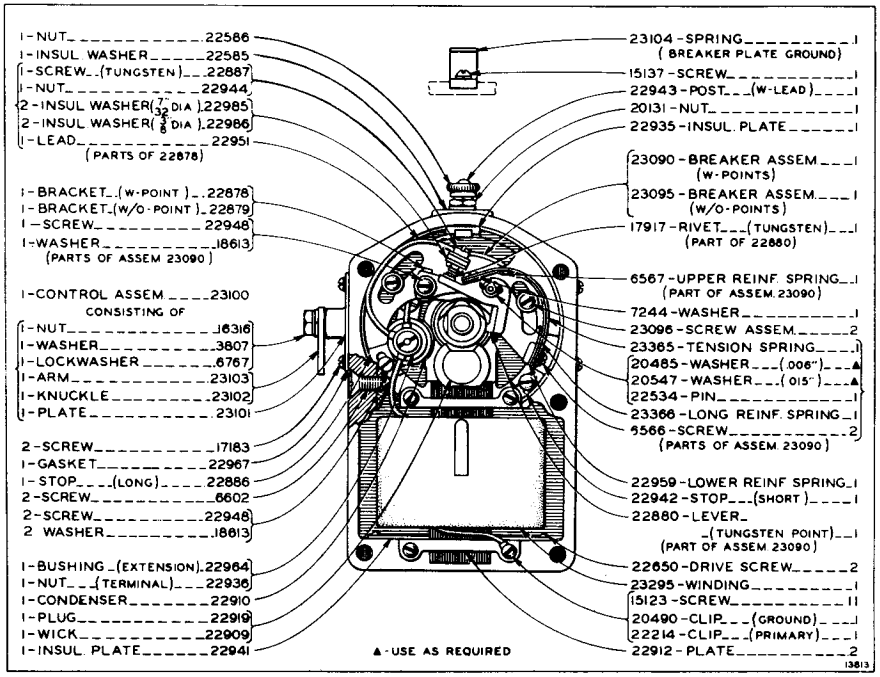


MAGNETO PARTS

Form 1736 Printed in U. S. A. Issue 1 1-15-40

**"Caterpillar" No. 6B3561 Magneto**
**Consists of:**
**Magneto Parts. . ... . .Shown on this Page**
**1-23910 Impulse Starter. . . . . .Page 261**
**1-21974 Drive Hub Assembly (Adjustable)**
**1-21813 Floating Disc**

NUMBERS SHOWN ARE MANUFACTURERS, NOT "CATERPILLAR" PART NUMBERS, EXCEPT WHEN SPECIFIED.

NUMBERS SHOWN ARE MANUFACTURERS, NOT "CATERPILLAR" PART NUMBERS, EXCEPT WHEN SPECIFIED.

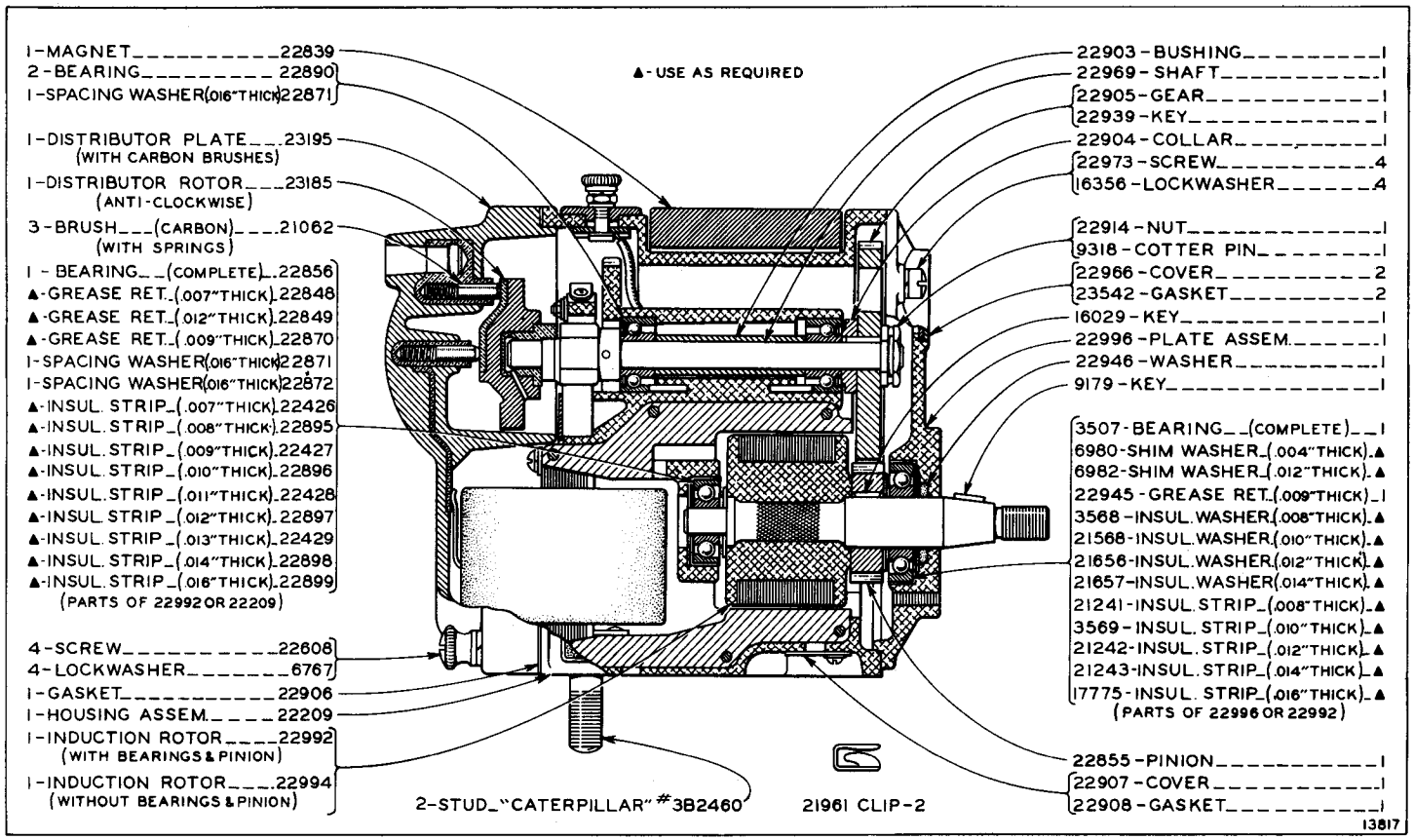


MAGNETO PARTS

# EISEMANN MAGNETO MODEL CM-6

Manufacturer
EISEMANN MAGNETO CORPORATION
60 East 42 Street - New York, N. Y.

For Parts Service on this Magneto Order from the Manufacturer or his Representative

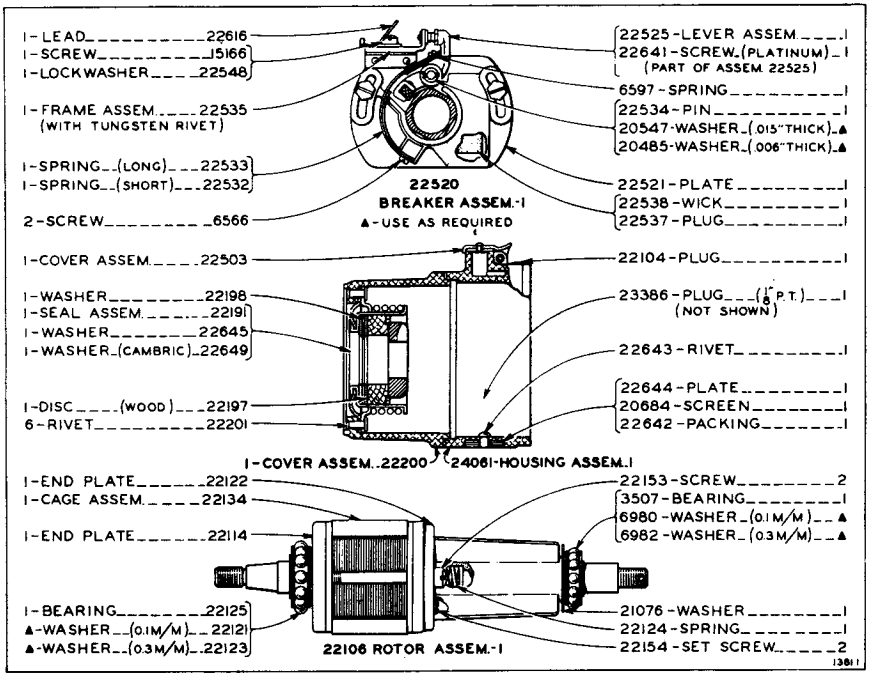


MAGNETO PARTS

Form 1736 Printed in U. S. A. Issue 1 2-1-40

"Caterpillar" No. 5B4851 Magneto
Consists of:
Magneto Parts . . . . . Shown on this Page
1-24757 Impulse Starter. . . . . Page 279
1-21974 Drive Hub Assembly (Adjustable)
1-21297 Floating Disc

NUMBERS SHOWN ARE MANUFACTURERS, NOT "CATERPILLAR" PART NUMBERS, EXCEPT WHEN SPECIFIED.

NUMBERS SHOWN ARE MANUFACTURERS, NOT "CATERPILLAR" PART NUMBERS, EXCEPT WHEN SPECIFIED.

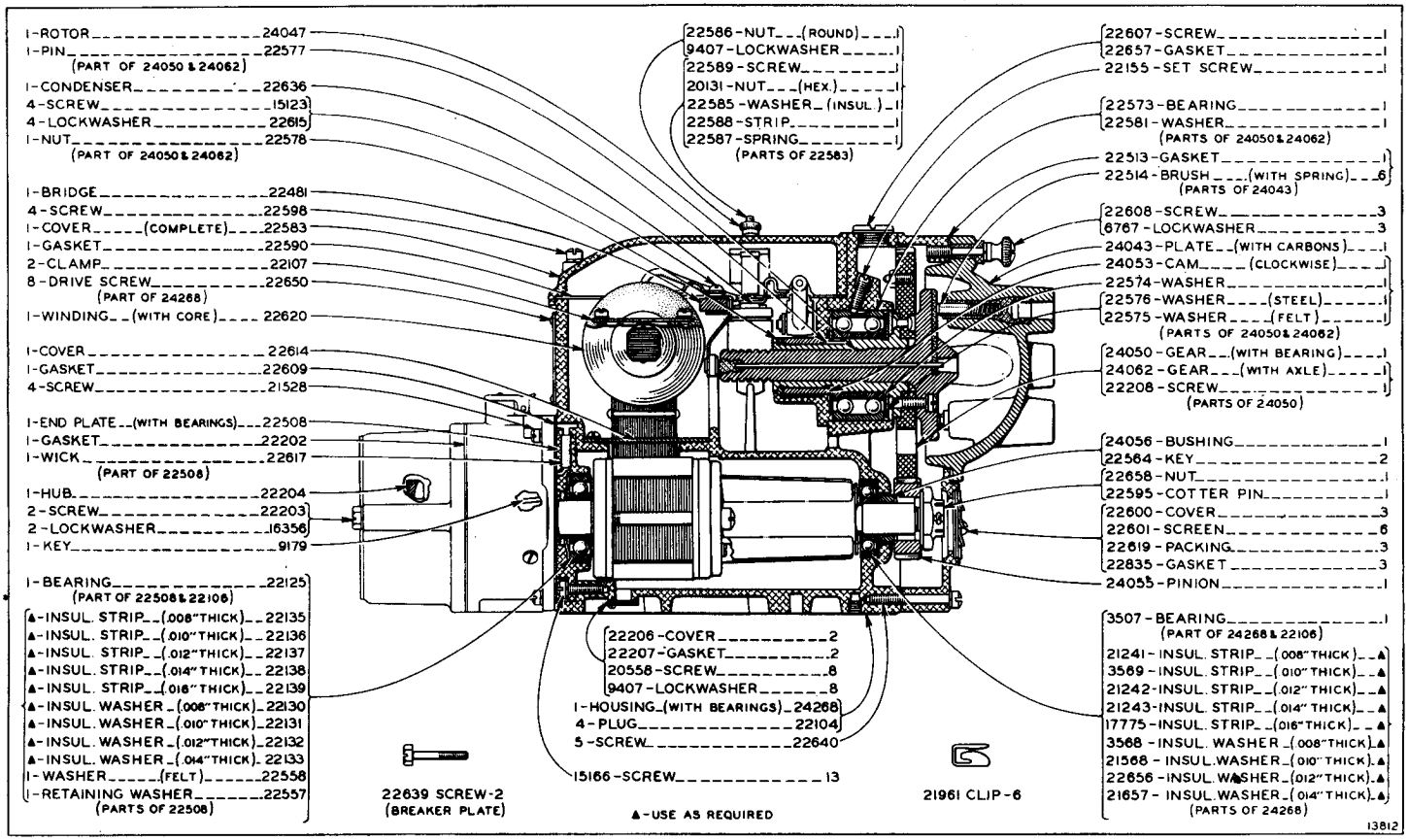


# MAGNETO PARTS

# EISEMANN MAGNETO MODEL RC-2H

Manufacturer
**EISEMANN MAGNETO CORPORATION**
60 East 42 Street, New York, N. Y.

For Parts Service on this Magneto, Order from the Manufacturer or his Representative

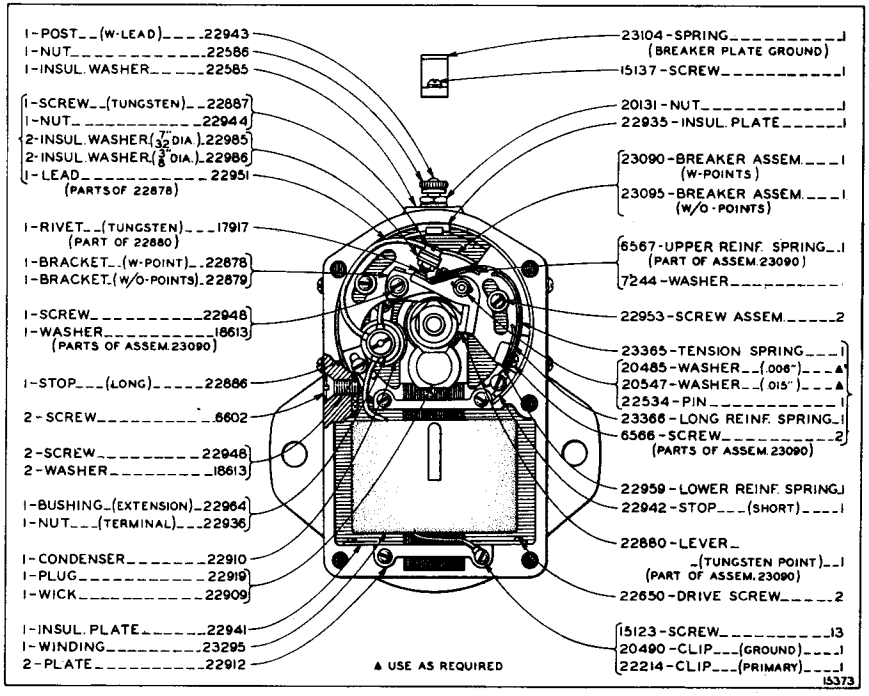


"Caterpillar" No. 6B6304 Magneto
Consists of:
Magneto Parts. . . . . .Shown on this Page
1-22449 Impulse Starter. . . . . Page 284

NUMBERS SHOWN ARE MANUFACTURERS, NOT "CATERPILLAR" PART NUMBERS, EXCEPT WHEN SPECIFIED.

Remove Issue 1 and insert this in it's place.

Form 1736 Printed in U. S. A. Issue 2 8-15-40

NUMBERS SHOWN ARE MANUFACTURERS', NOT "CATERPILLAR" PART NUMBERS, EXCEPT WHEN SPECIFIED.

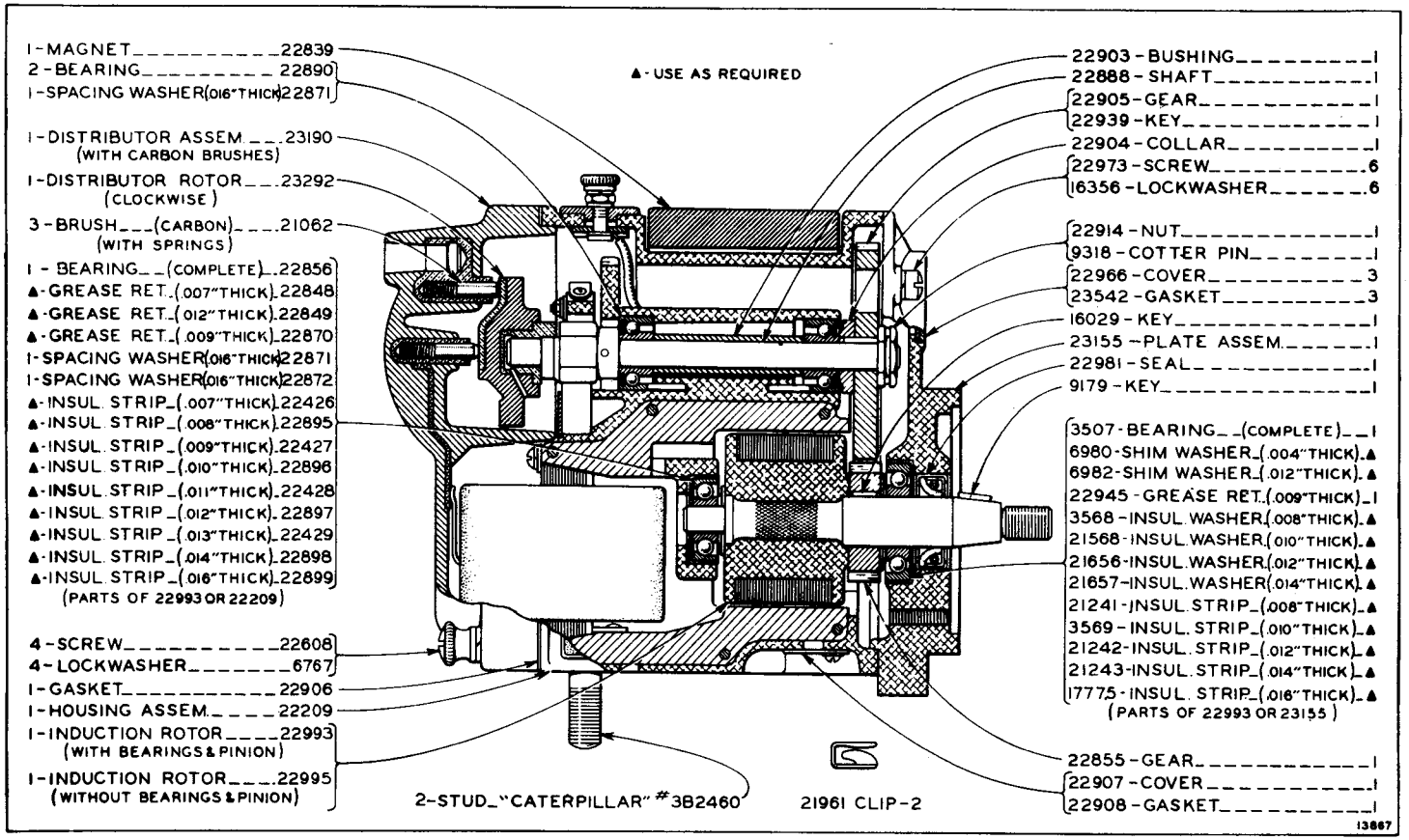

# EISEMANN IMPULSE STARTER No. 22449

Manufacturer
EISEMANN MAGNETO CORPORATION
60 East 42 Street, New York, N. Y.

For Parts Service on this Impulse Starter Order from the Manufacturer or his Representative

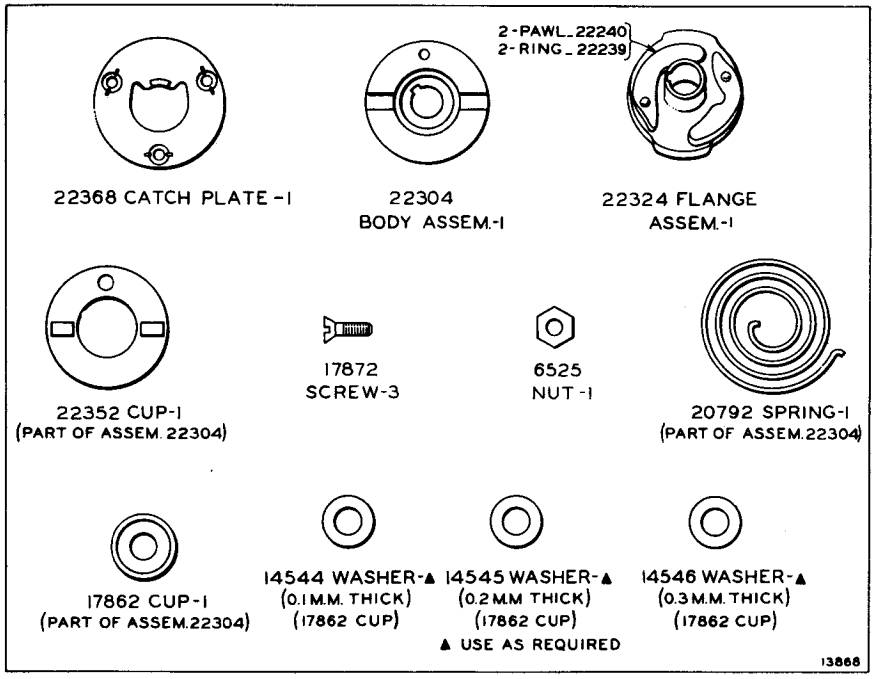


NO. 22449 IMPULSE STARTER

Form 1736 Printed in U. S. A. Issue 1 1-15-40

NUMBERS SHOWN ARE MANUFACTURERS, NOT "CATERPILLAR" PART NUMBERS, EXCEPT WHEN SPECIFIED.

# BOSCH GENERATOR RKF $\frac{130}{6}$ 900 RS 670

Manufacturer
UNITED AMERICAN BOSCH CORPORATION
Springfield, Massachusetts

For Parts Service on this Generator, Order from the Manufacturer or his Representative

Form 1736 Printed in U. S. A. Issue 1 1-15-41

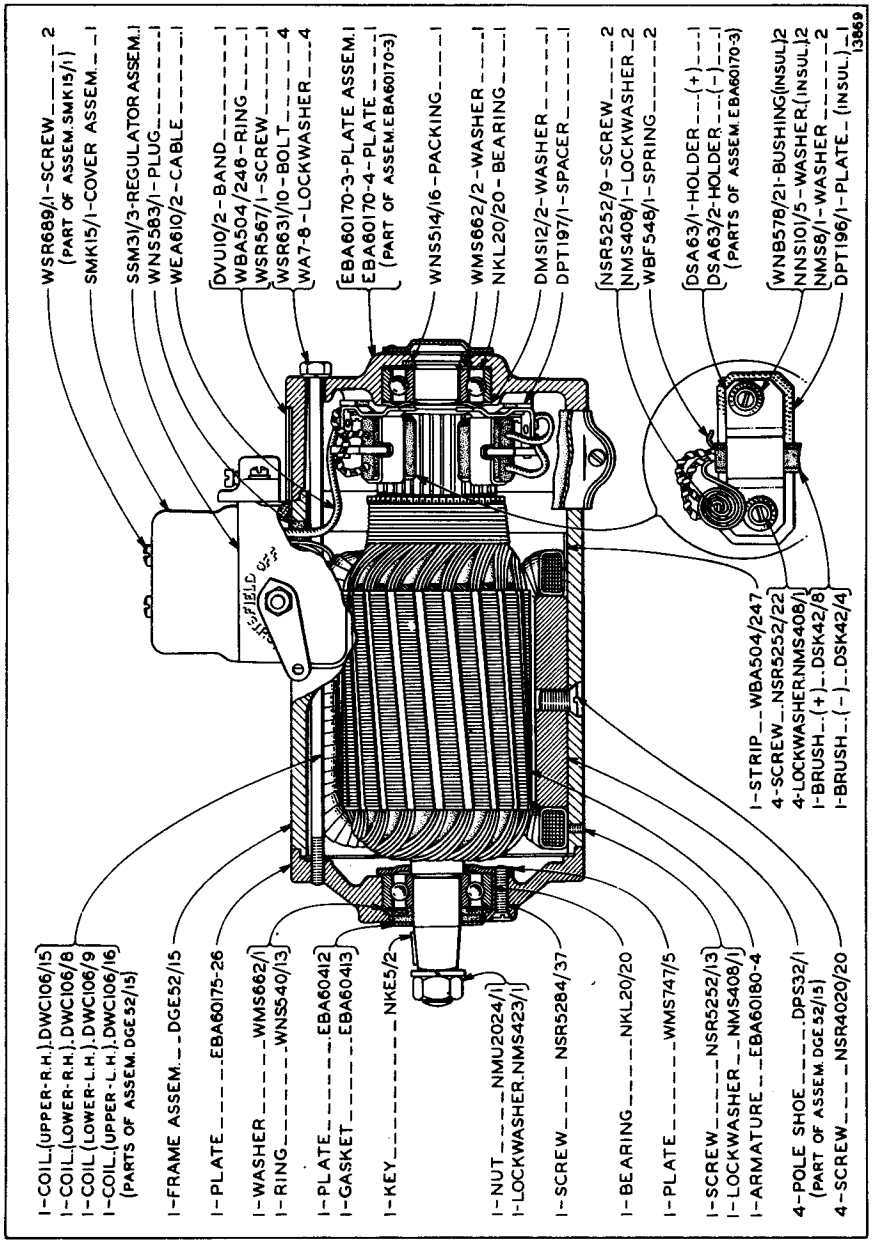


"CATERPILLAR" No. 5B4247
NUMBERS SHOWN ARE MANUFACTURERS, NOT "CATERPILLAR" PART NUMBERS, EXCEPT WHEN SPECIFIED.

# ENSIGN NATURAL GAS PRESSURE REGULATOR MODEL "F" ¾"

Manufacturer
ENSIGN CARBURETOR CO., LTD.
7010 S. Alameda St. or 450 East Ohio St.
Huntington Park, Calif. Chicago, Ill.

For Parts Service on this Regulator, order from the Manufacturer or his Representative

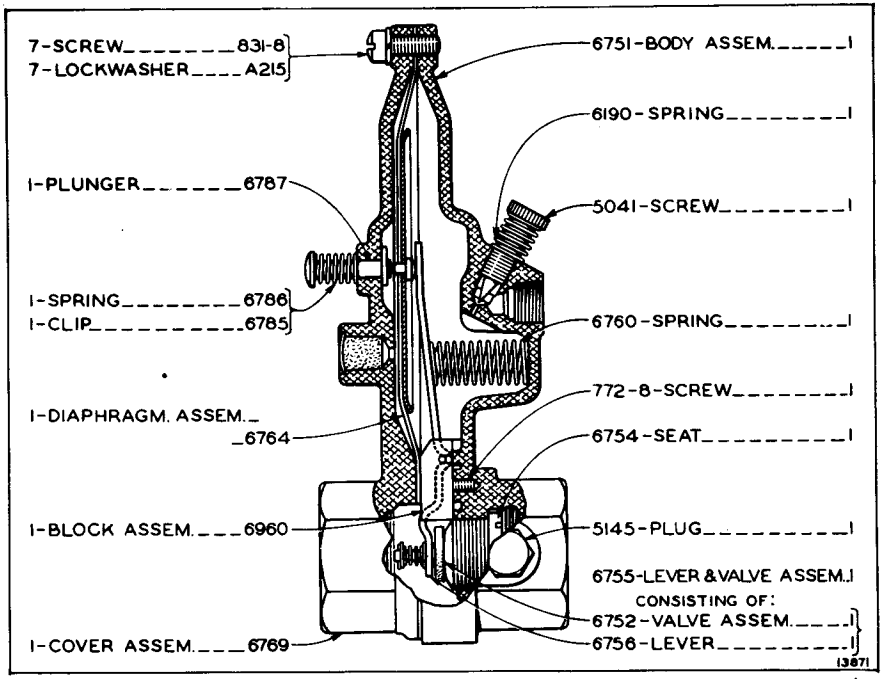


"CATERPILLAR" NO. 6B3554

Form 1736 Printed in U. S. A. Issue 1 11-1-39

NUMBERS SHOWN ARE MANUFACTURERS, NOT "CATERPILLAR" PART NUMBERS, EXCEPT WHEN SPECIFIED.

# DELCO-REMY STARTING MOTOR
# MODEL 778

Manufacturer
**DELCO-REMY DIVISION**
General Motors Corporation
Anderson, Indiana

For Parts Service on this Starting Motor, Order from the United Motors Service Corp. or their Representative

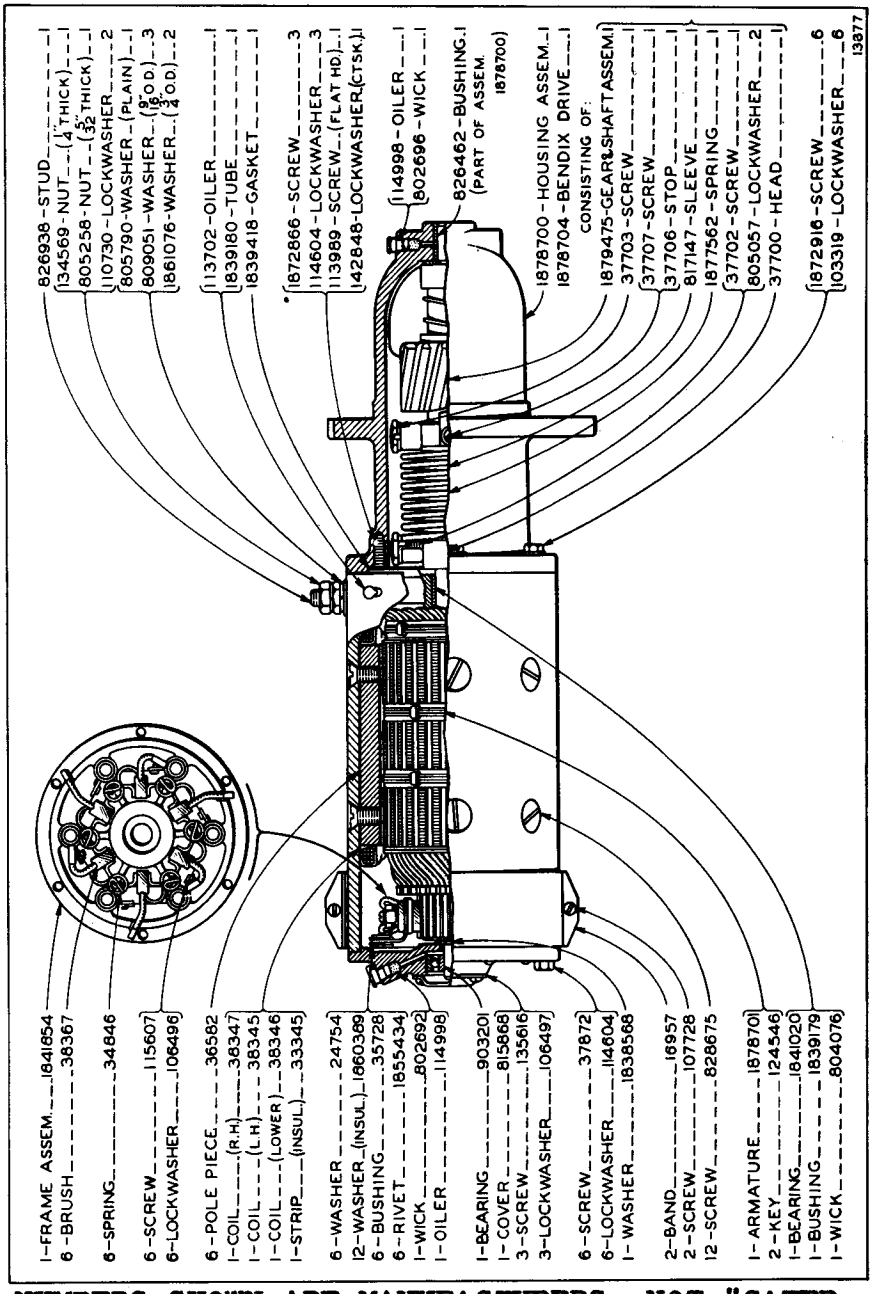


"CATERPILLAR" NO. 6B2761

**NUMBERS SHOWN ARE MANUFACTURERS, NOT "CATERPILLAR" PART NUMBERS, EXCEPT WHEN SPECIFIED.**

Form 1736 Printed in U. S. A. Issue 1 8-15-40

Form 1736 Printed in U. S. A. Issue 1 4-1-40

# DELCO-REMY STARTING MOTOR
## MODEL 1107024

Manufacturer
DELCO-REMY DIVISION
General Motors Corporation
Anderson, Indiana

For Parts Service on this Starter, Order from the United Motors Service Corp. or their Representative




"CATERPILLAR" NO. 6B2861

NUMBERS SHOWN ARE MANUFACTURERS, NOT "CATERPILLAR" PART NUMBERS, EXCEPT WHEN SPECIFIED.

# BENDIX VACUUM PUMP No. BK-16490

Manufacturer
BENDIX PRODUCTS DIVISION
Bendix Aviation Corporation
South Bend, Ind.

For Parts Service on this Pump, Order from the Manufacturer or his Representative

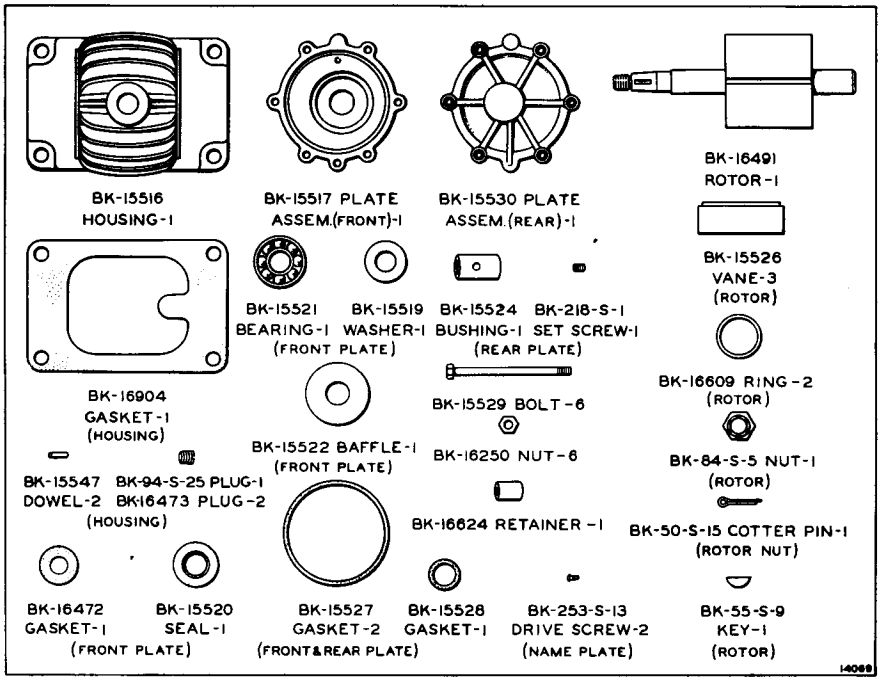


CATERPILLAR NO. 6B6379

Form 1736 Printed in U. S. A. Issue 1 3-1-40

NUMBERS SHOWN ARE MANUFACTURERS, NOT "CATERPILLAR" PART NUMBERS, EXCEPT WHEN SPECIFIED.

# BENDIX VACUUM PUMP No. BK-16551

Manufacturer
BENDIX PRODUCTS DIVISION
Bendix Aviation Corporation
South Bend, Ind.

For Parts Service on this Pump, Order from the Manufacturer or his Representative

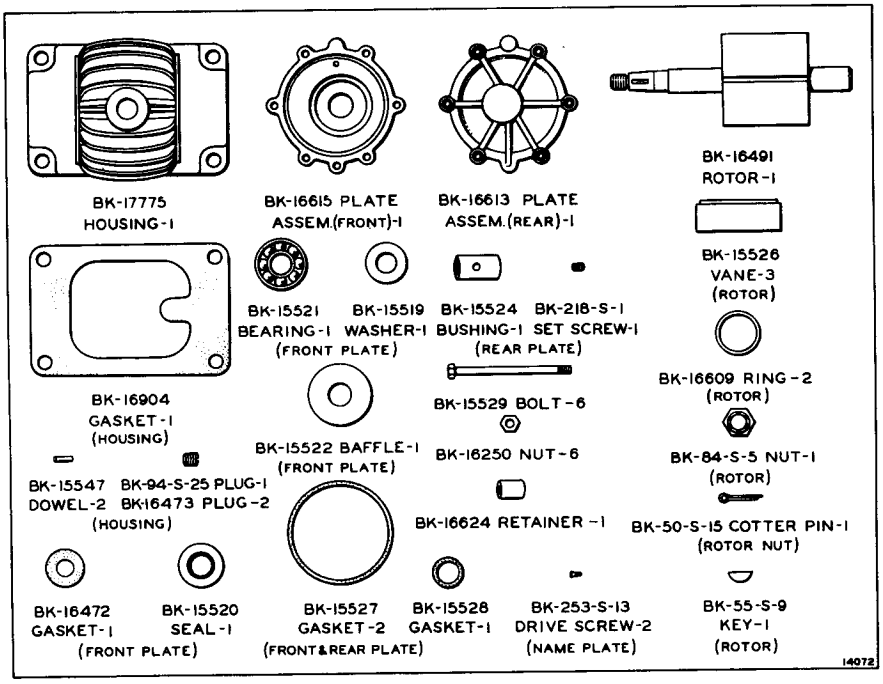


CATERPILLAR NO. 6B9079

Form 1736 Printed in U. S. A. Issue 1 3-1-40

NUMBERS SHOWN ARE MANUFACTURERS, NOT "CATERPILLAR". PART NUMBERS, EXCEPT WHEN SPECIFIED.

# KELLOGG TIRE PUMP MODEL 42-13075

Manufacturer
Kellogg Division of
The American Brake Shoe and Foundry Co.
Rochester, New York

For Parts Service on this Pump, Order from the Manufacturer or his Representative

Form 17:36 Printed in U. S. A. Issue 1 2-1-41

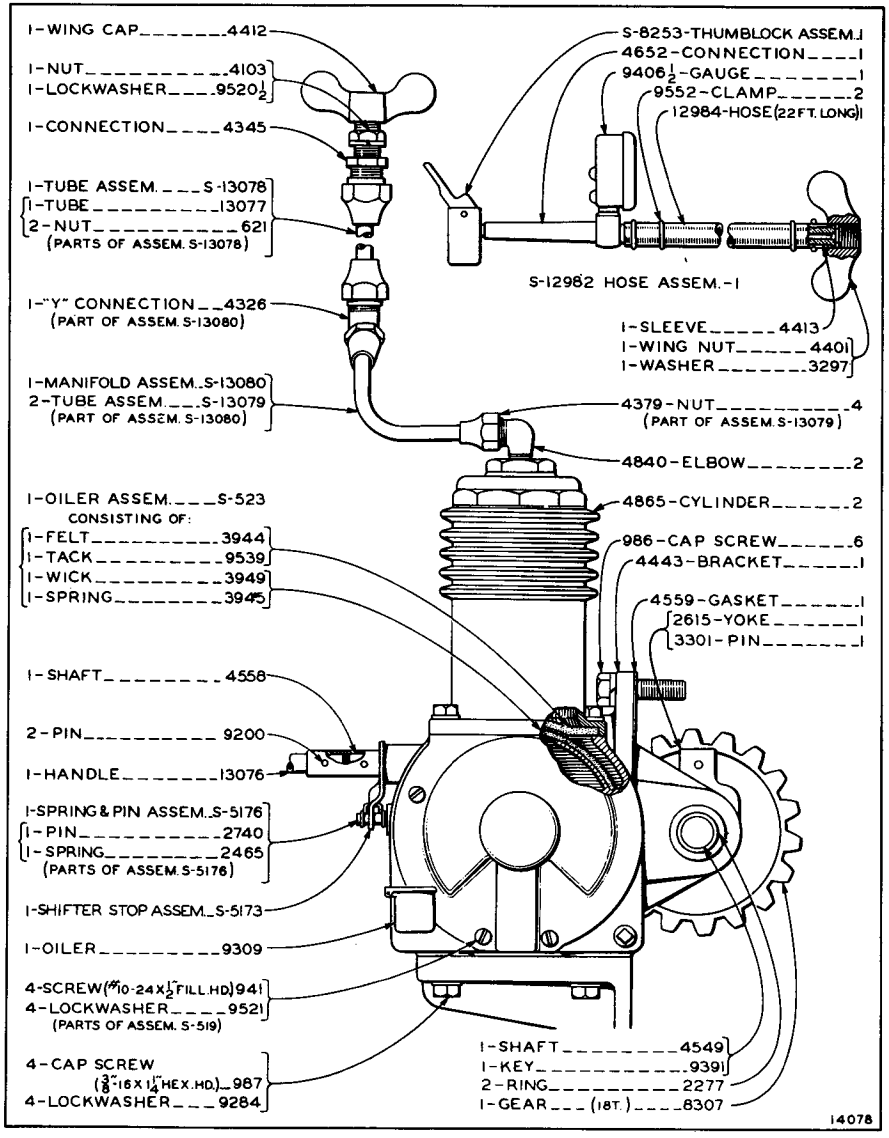


"CATERPILLAR" NO. 6B1594

(Continued on Back of Page)

NUMBERS SHOWN ARE MANUFACTURERS, NOT "CATERPILLAR" PART NUMBERS, EXCEPT WHEN SPECIFIED.

NUMBERS SHOWN ARE MANUFACTURERS, NOT "CATERPILLAR" PART NUMBERS, EXCEPT WHEN SPECIFIED.

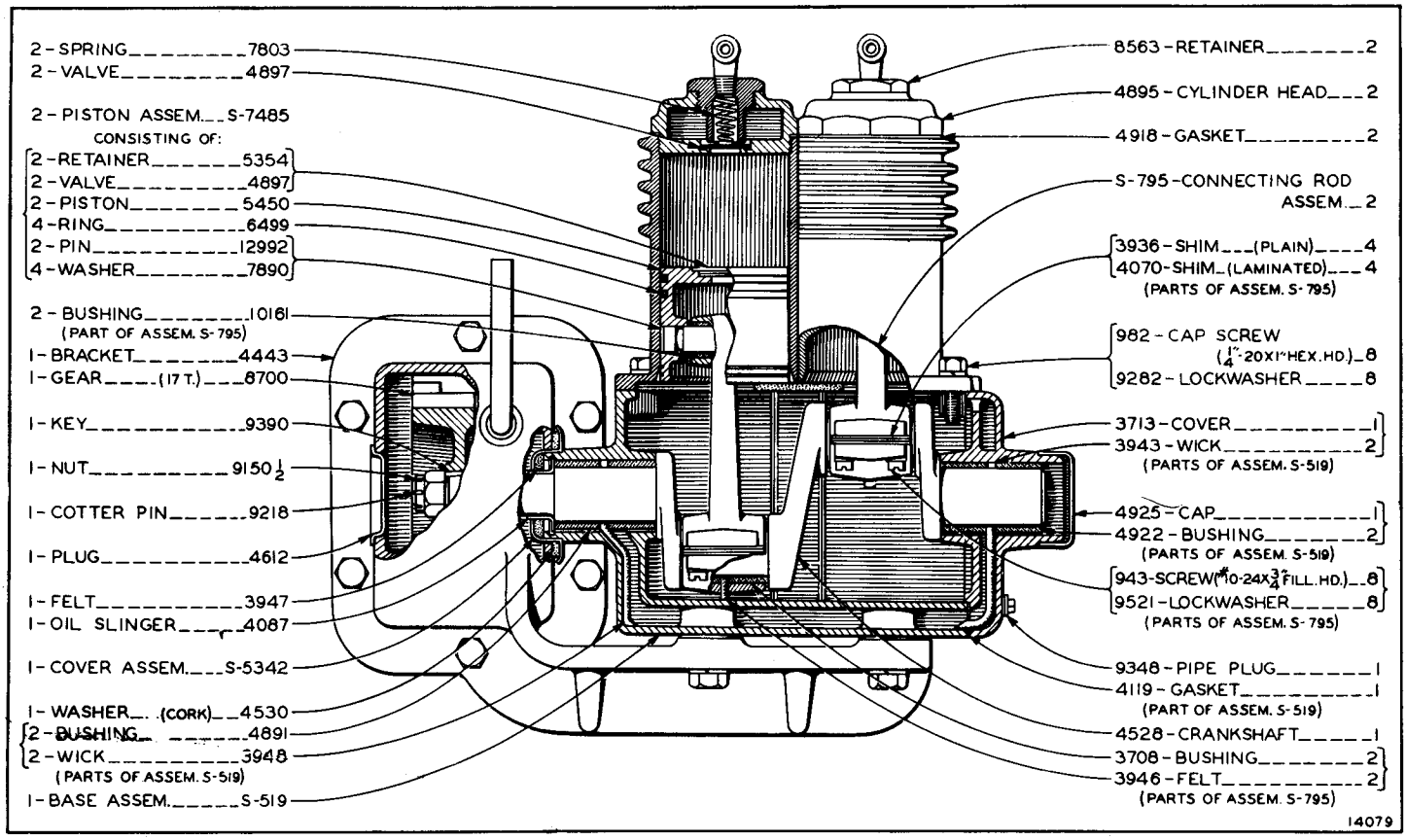

# DONALDSON AIR CLEANER MODEL A-7093

Manufacturer
DONALDSON COMPANY, Inc.
666 Pelham Street
Saint Paul, Minn.

For Parts Service on this
Air Cleaner, Order from the
Caterpillar Tractor Co.
Peoria, Ill. or
San Leandro, Cal.

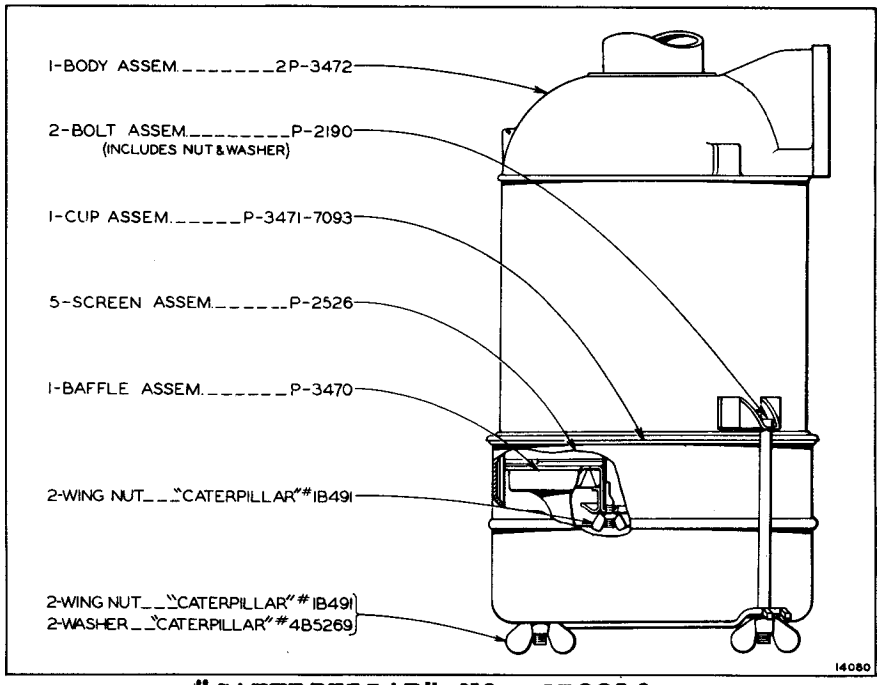


"CATERPILLAR" NO. 6B9210

Form 1736 Printed in U. S. A. Issue 1 2-1-40

NUMBERS SHOWN ARE MANUFACTURERS, NOT "CATERPILLAR" PART NUMBERS, EXCEPT WHEN SPECIFIED.

# KELLOGG TIRE PUMP MODEL 42-13081

Manufacturer
Kellogg Division of
The American Brake Shoe and Foundry Co.
Rochester, New York

For Parts Service on this Pump, Order from the Manufacturer or his Representative

Form 1736 Printed in U. S. A. Issue 1 12-1-40

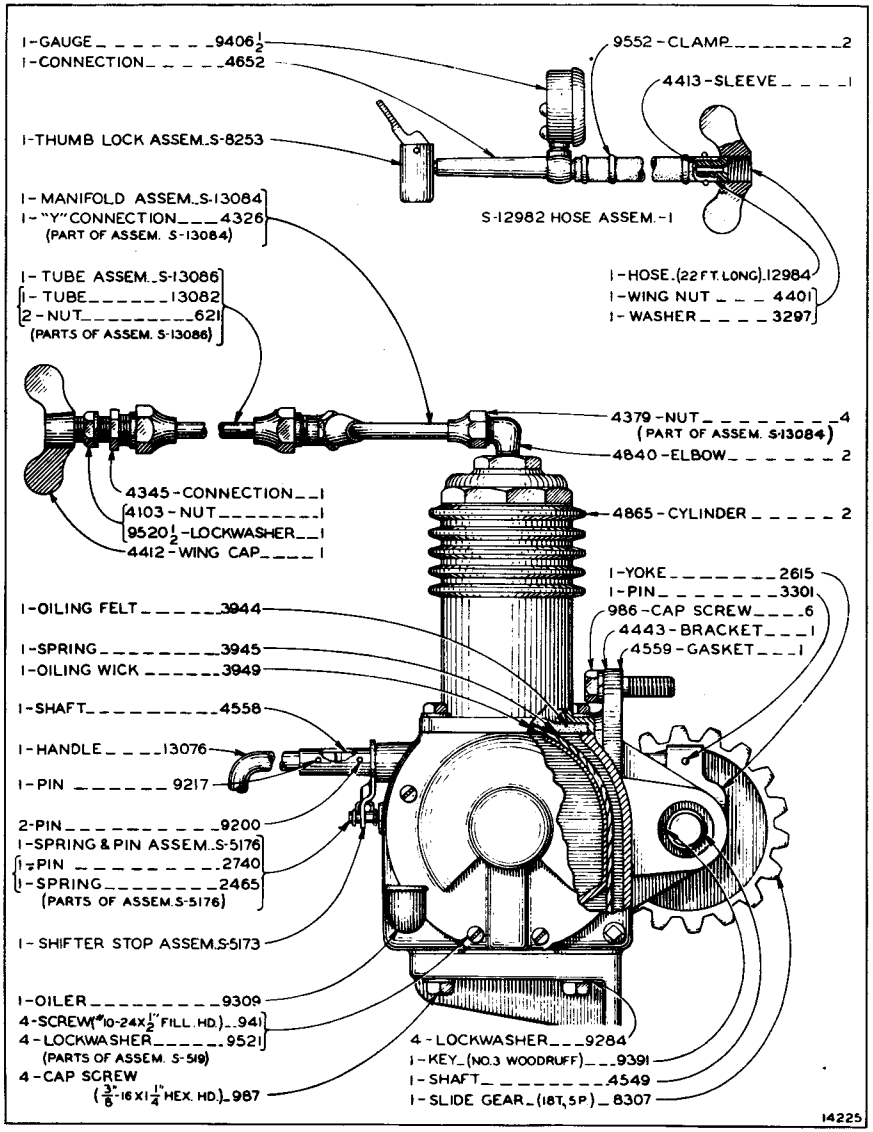


"CATERPILLAR" NO. 6B8391

(Continued on Back of Page)

NUMBERS SHOWN ARE MANUFACTURERS, NOT "CATERPILLAR" PART NUMBERS, EXCEPT WHEN SPECIFIED.

NUMBERS SHOWN ARE MANUFACTURERS, NOT "CATERPILLAR" PART NUMBERS, EXCEPT WHEN SPECIFIED.

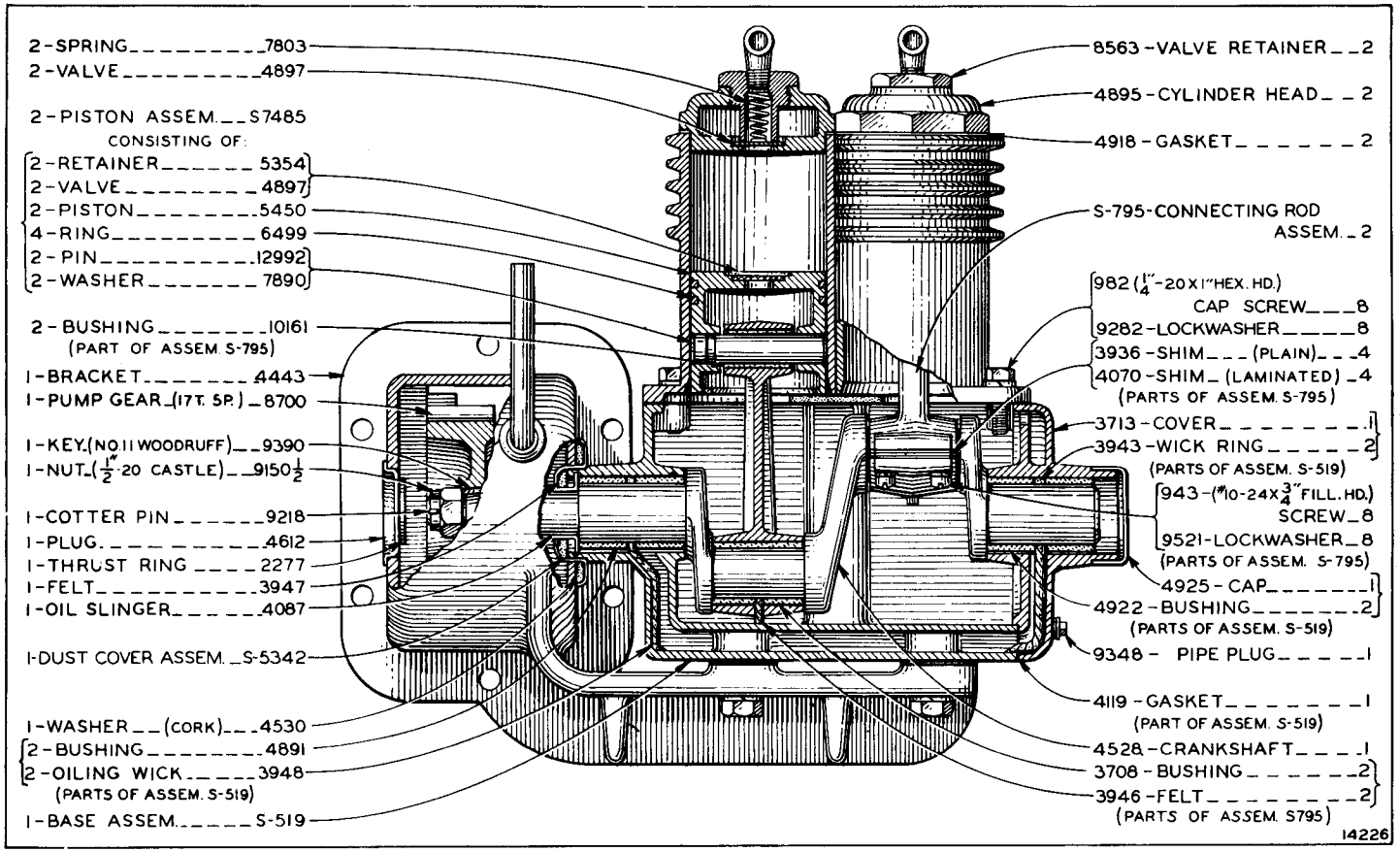

# GARDNER-DENVER AUXILIARY WATER PUMP No. 1-AUX-522

Manufacturer
GARDNER-DENVER COMPANY
Quincy, Illinois

For Parts Service on this Pump, Order from the Manufacturer or his Representative

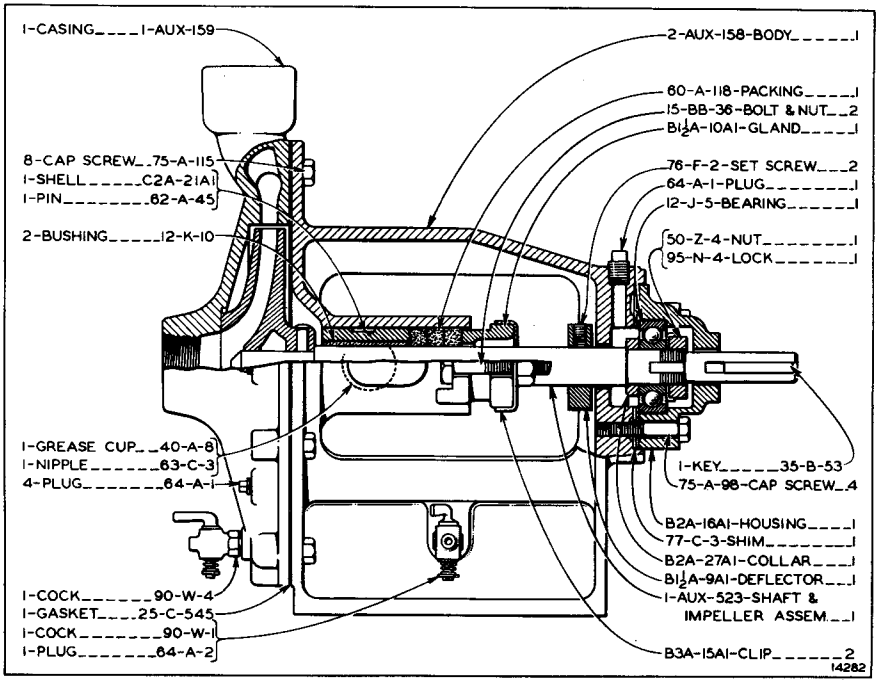


CATERPILLAR NO. 4B8603

NUMBERS SHOWN ARE MANUFACTURERS, NOT "CATERPILLAR" PART NUMBERS, EXCEPT WHEN SPECIFIED.

Form 1736 Printed in U.S.A. Issue 1 3-1-40

# LEECE-NEVILLE GENERATOR TYPE 1745G

Manufacturer
LEECE-NEVILLE Company
5363 Hamilton Avenue N.E.
Cleveland, Ohio

For Parts Service on this Generator, Order from the Manufacturer or his Representative

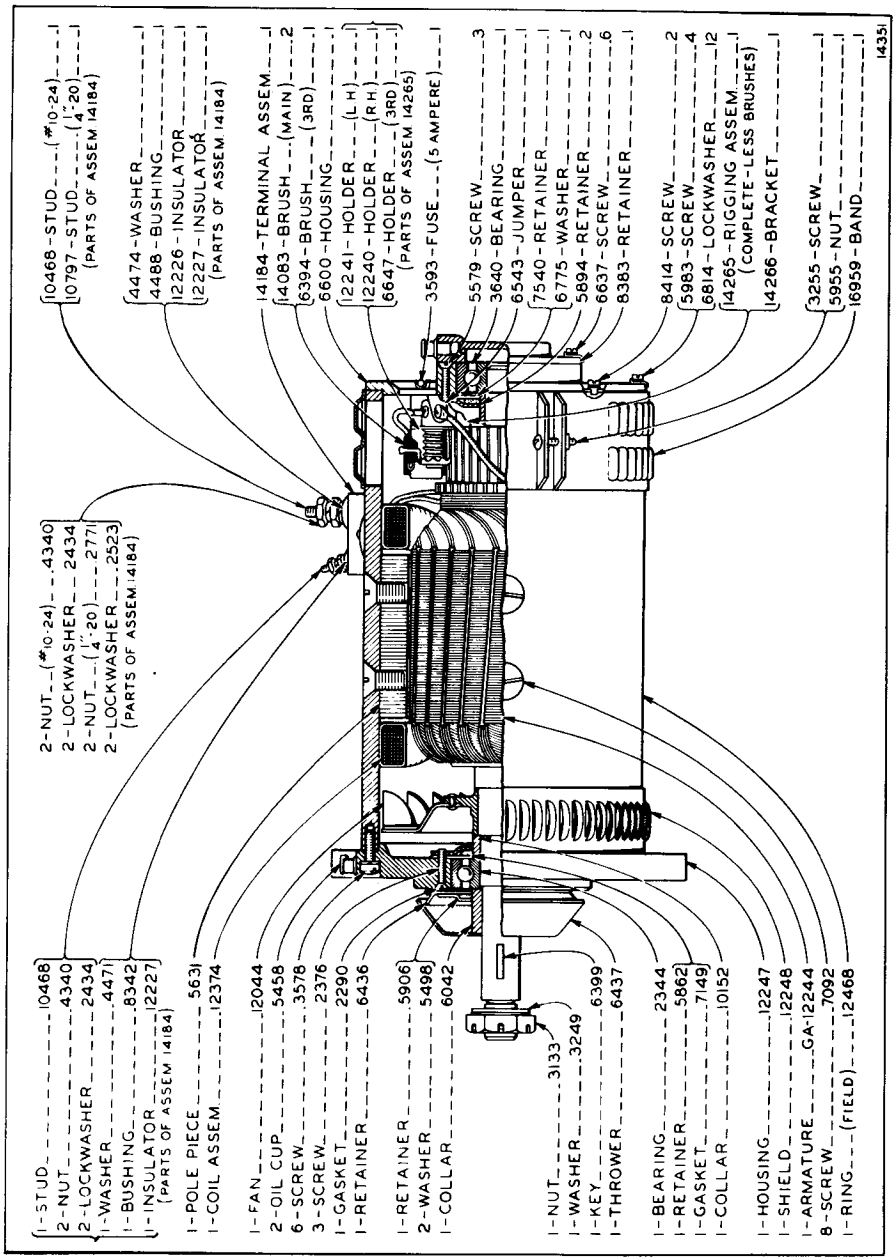


"CATERPILLAR" NO. 4B3248

NUMBERS SHOWN ARE MANUFACTURERS, NOT "CATERPILLAR" PART NUMBERS, EXCEPT WHEN SPECIFIED.

Form 1736 Printed in U.S.A. Issue 1 5-1-40

# LEECE- NEVILLE GENERATOR TYPE 1920G

Manufacturer
LEECE-NEVILLE Company
5363 Hamilton Avenue N.E.
Cleveland, Ohio

For Parts Service on this Generator, Order from the Manufacturer or his Representative

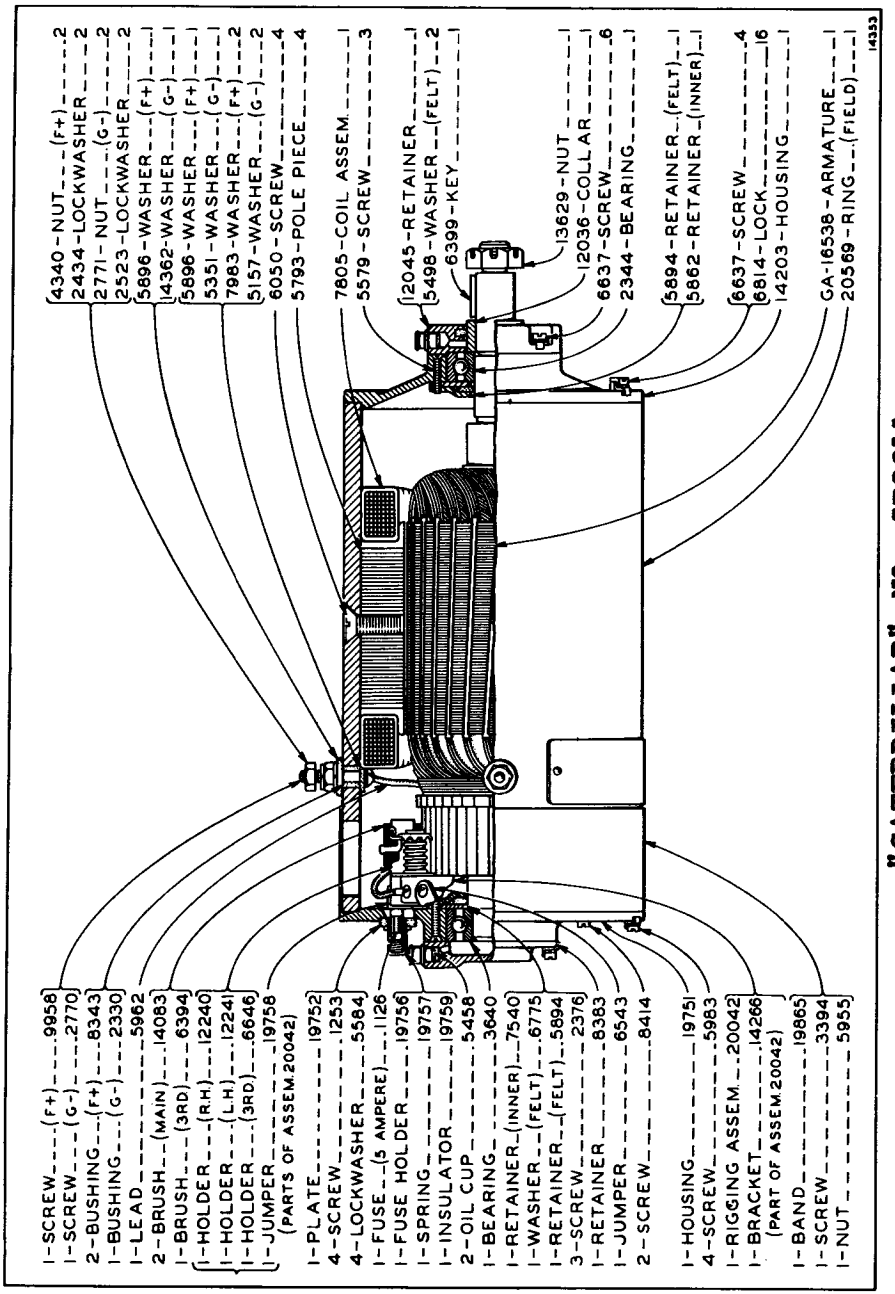


"CATERPILLAR" NO. 5B8011

**NUMBERS SHOWN ARE MANUFACTURERS, NOT "CATERPILLAR" PART NUMBERS, EXCEPT WHEN SPECIFIED.**

Form 1736 Printed in U.S.A. Issue 1 6-15-40

# LEECE-NEVILLE GENERATOR TYPE 1960G

Manufacturer
LEECE-NEVILLE COMPANY
5363 Hamilton Avenue N. E.
Cleveland, Ohio

For Parts Service on this Generator, Order from the Manufacturer or his Representative

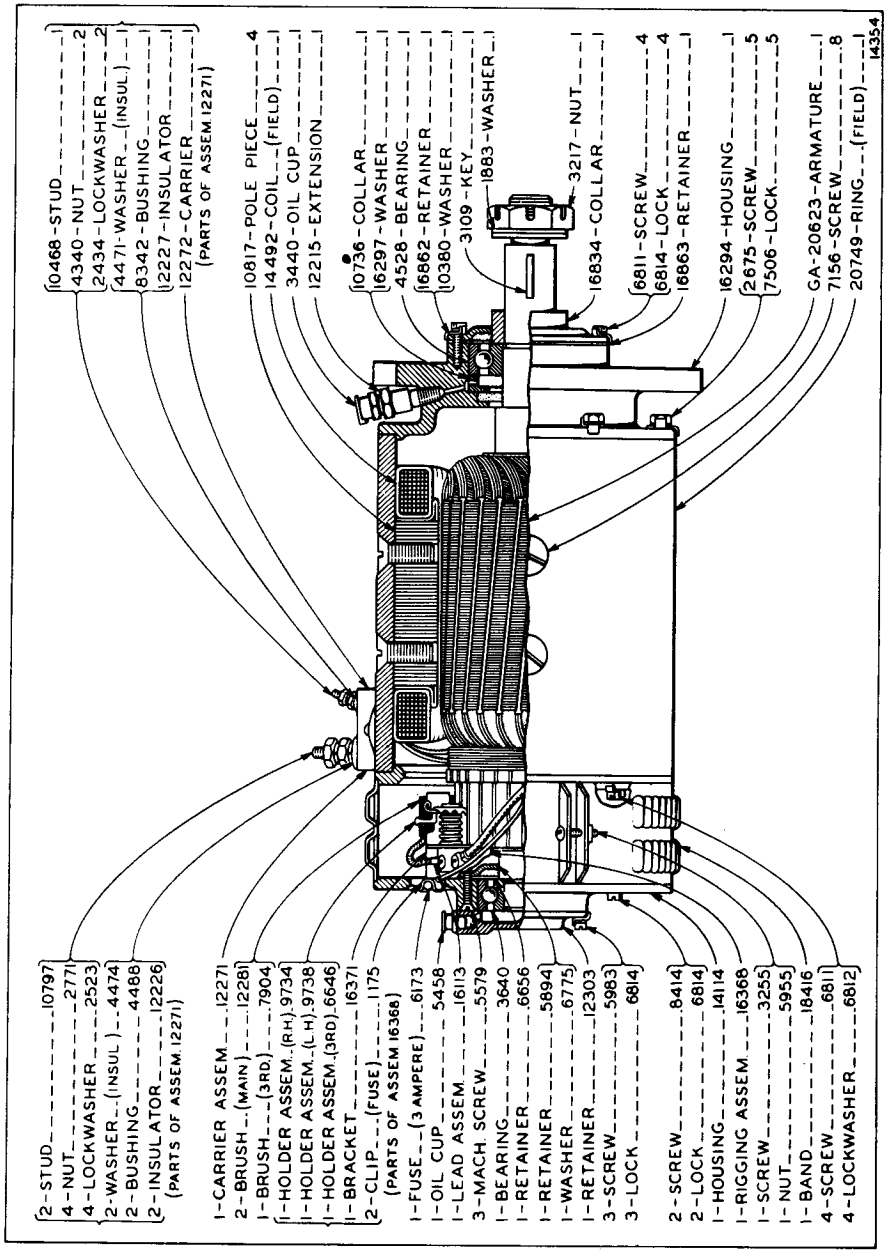


"CATERPILLAR" NO. 5B9781

NUMBERS SHOWN ARE MANUFACTURERS, NOT "CATERPILLAR" PART NUMBERS, EXCEPT WHEN SPECIFIED.

Form 1738 Printed in U. S. A. Issue 1 12-1-40

# LEECE-NEVILLE GENERATOR TYPE 1961G

Manufacturer
LEECE-NEVILLE COMPANY
5363 Hamilton Avenue N. E.
Cleveland, Ohio

For Parts Service on this Generator, Order from the Manufacturer or his Representative

Form 1736 Printed in U. S. A. Issue 1 8-15-40

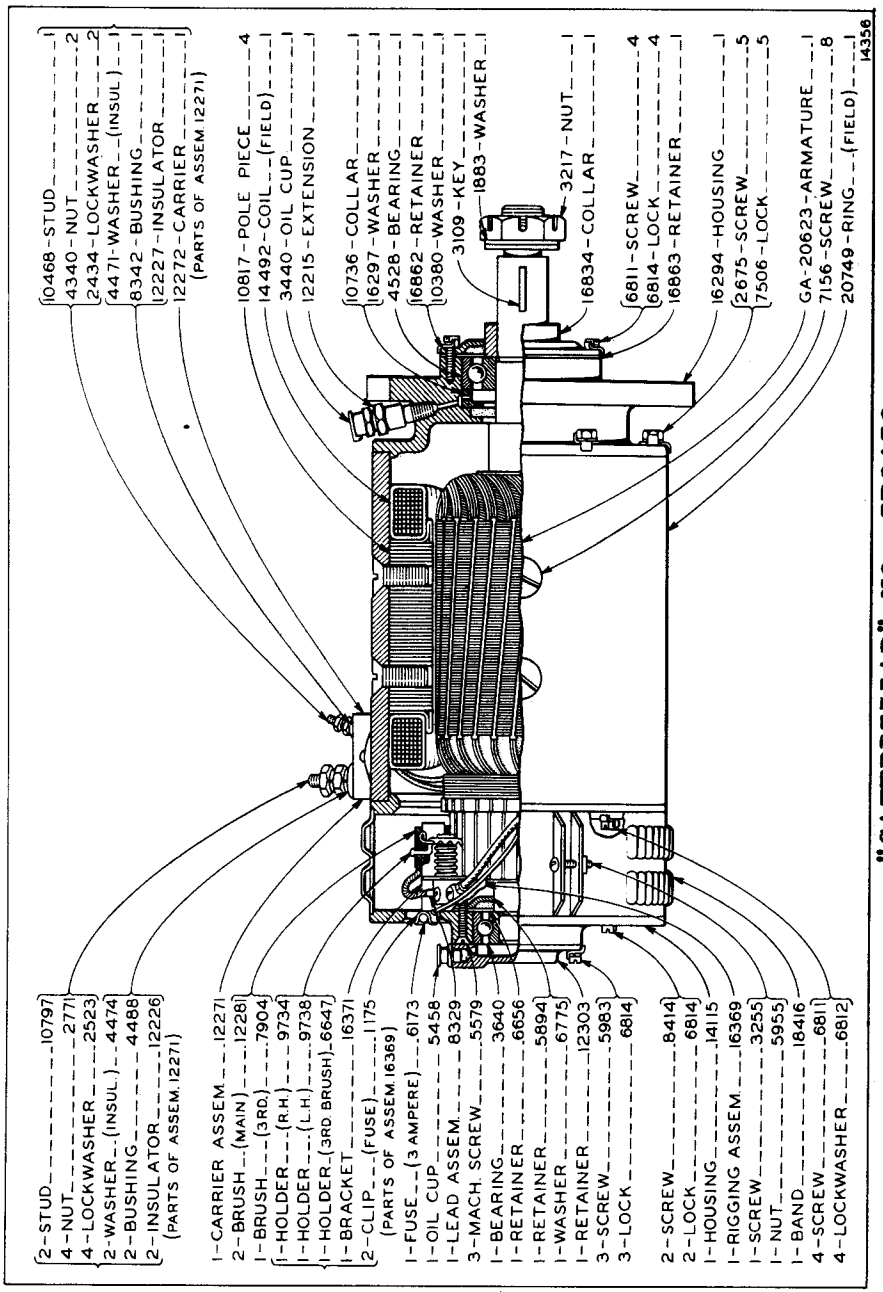


"CATERPILLAR" NO. 5B9456

NUMBERS SHOWN ARE MANUFACTURERS, NOT "CATERPILLAR" PART NUMBERS, EXCEPT WHEN SPECIFIED.

# LEECE-NEVILLE GENERATOR TYPE 1910G

Manufacturer
**LEECE-NEVILLE** Company
5363 Hamilton Avenue N.E.
Cleveland, Ohio

For Parts Service on this Generator, Order from the Manufacturer or his Representative

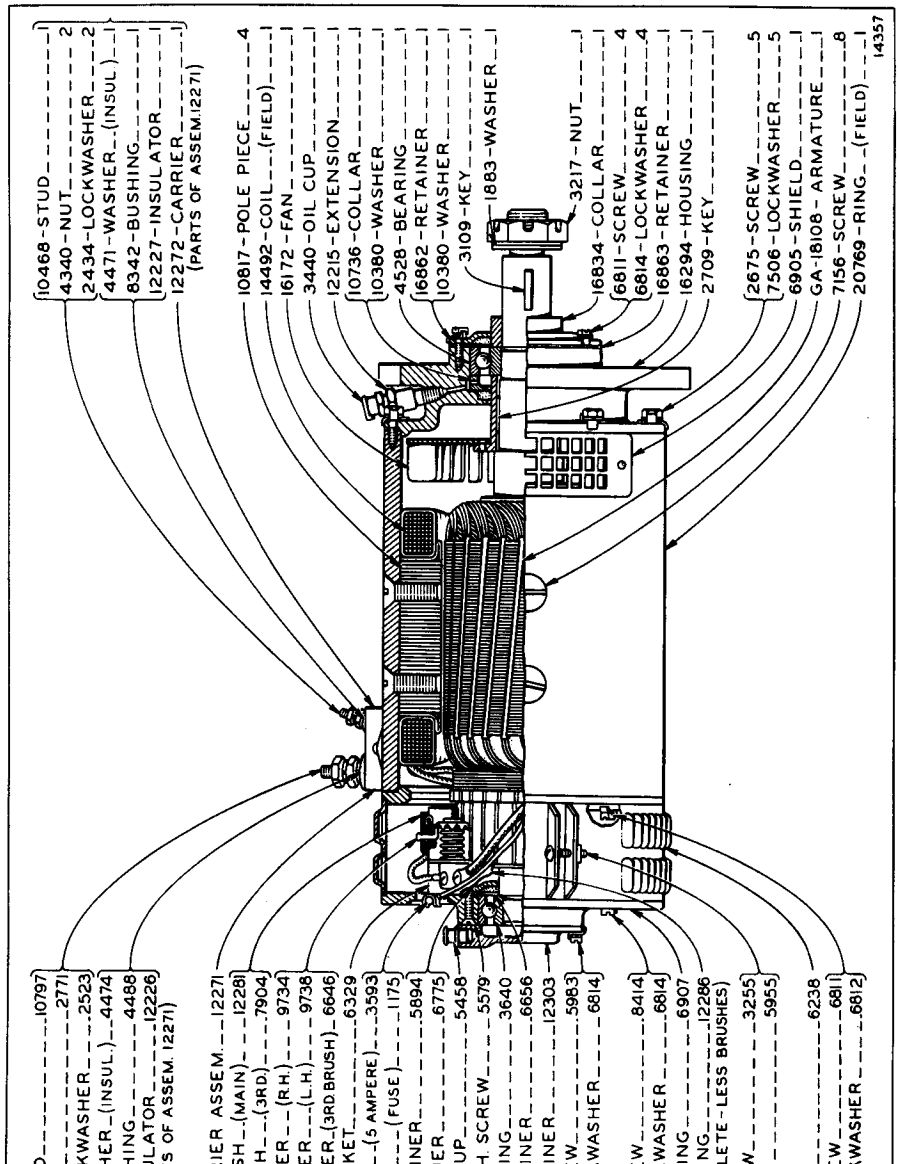


"CATERPILLAR" NO. 4B9748

NUMBERS SHOWN ARE MANUFACTURERS, NOT "CATERPILLAR" PART NUMBERS, EXCEPT WHEN SPECIFIED.

Form 1736 Printed in U.S.A. Issue 1 5-1-40

# LEECE-NEVILLE GENERATOR TYPE 1912G

Manufacturer
LEECE-NEVILLE Company
5363 Hamilton Avenue N.E.
Cleveland, Ohio

For Parts Service on this Generator, Order from the Manufacturer or his Representative

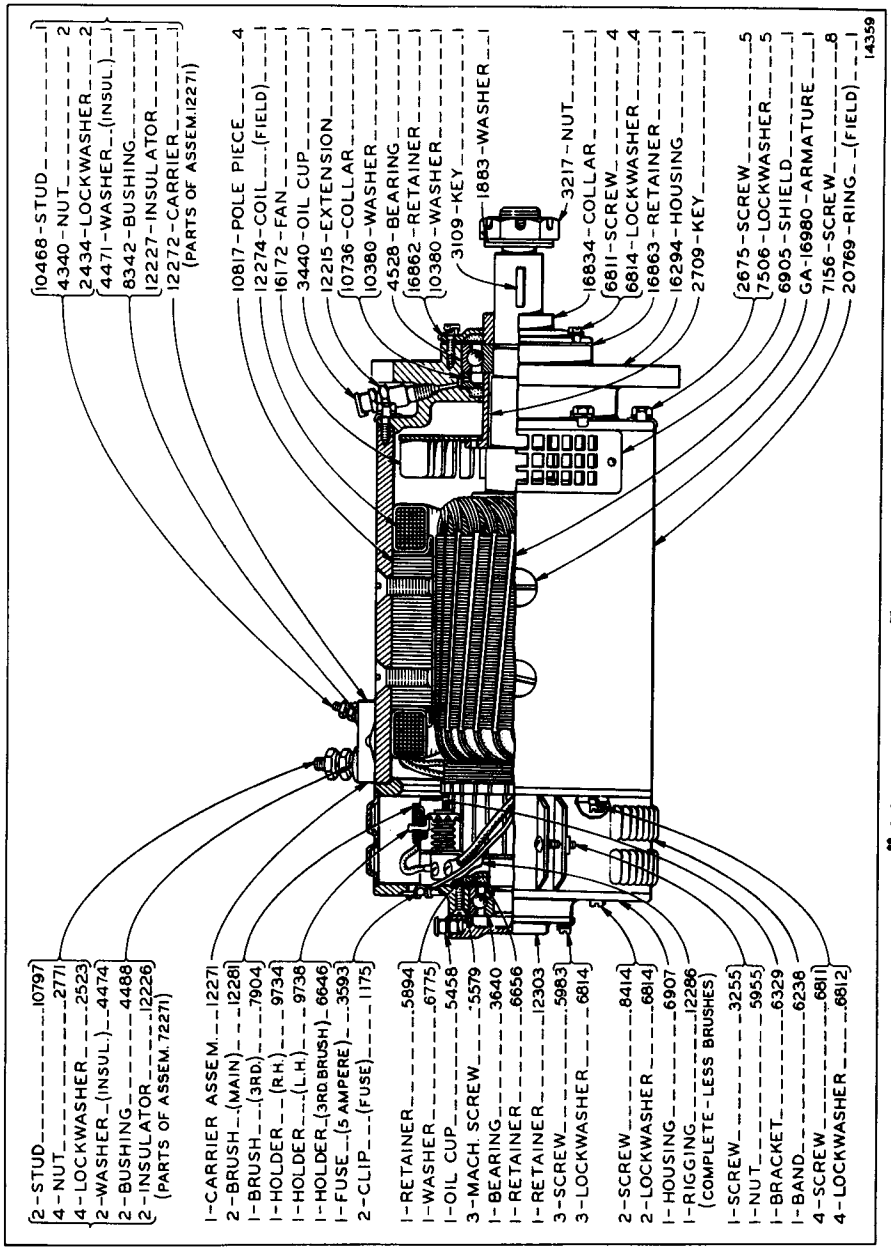


"CATERPILLAR" NO. 5B9809

NUMBERS SHOWN ARE MANUFACTURERS, NOT "CATERPILLAR" PART NUMBERS, EXCEPT WHEN SPECIFIED.

Form 1736 Printed in U.S.A. Issue 1 5-1-40

# LEECE-NEVILLE GENERATOR TYPE 1946G

Manufacturer
**LEECE-NEVILLE COMPANY**
5363 Hamilton Avenue N. E.
Cleveland, Ohio

For Parts Service on this Generator, Order from the Manufacturer or his Representative

Form 1736 Printed in U. S. A. Issue 1 10-1-40

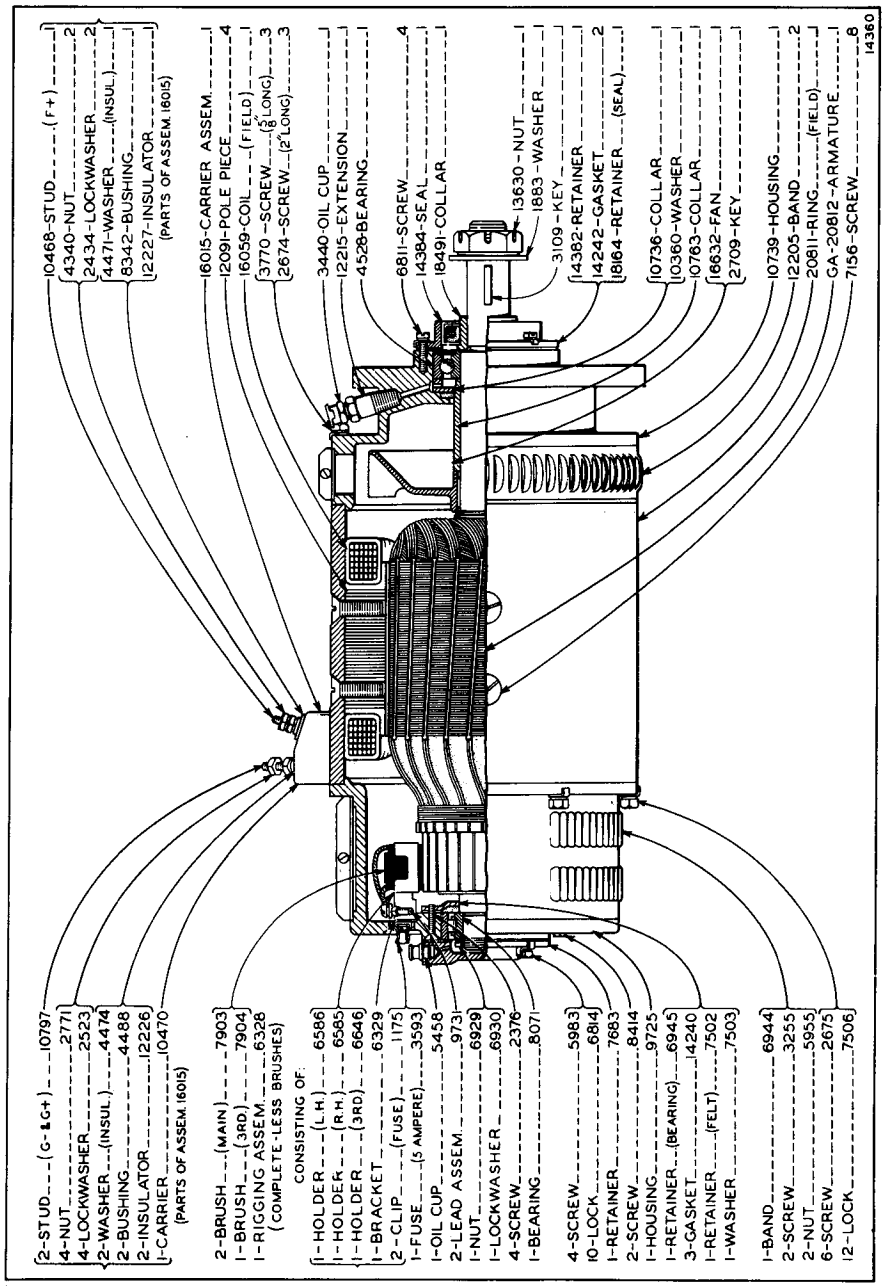


"CATERPILLAR" NO. 5B7910

NUMBERS SHOWN ARE MANUFACTURERS, NOT "CATERPILLAR" PART NUMBERS, EXCEPT WHEN SPECIFIED.

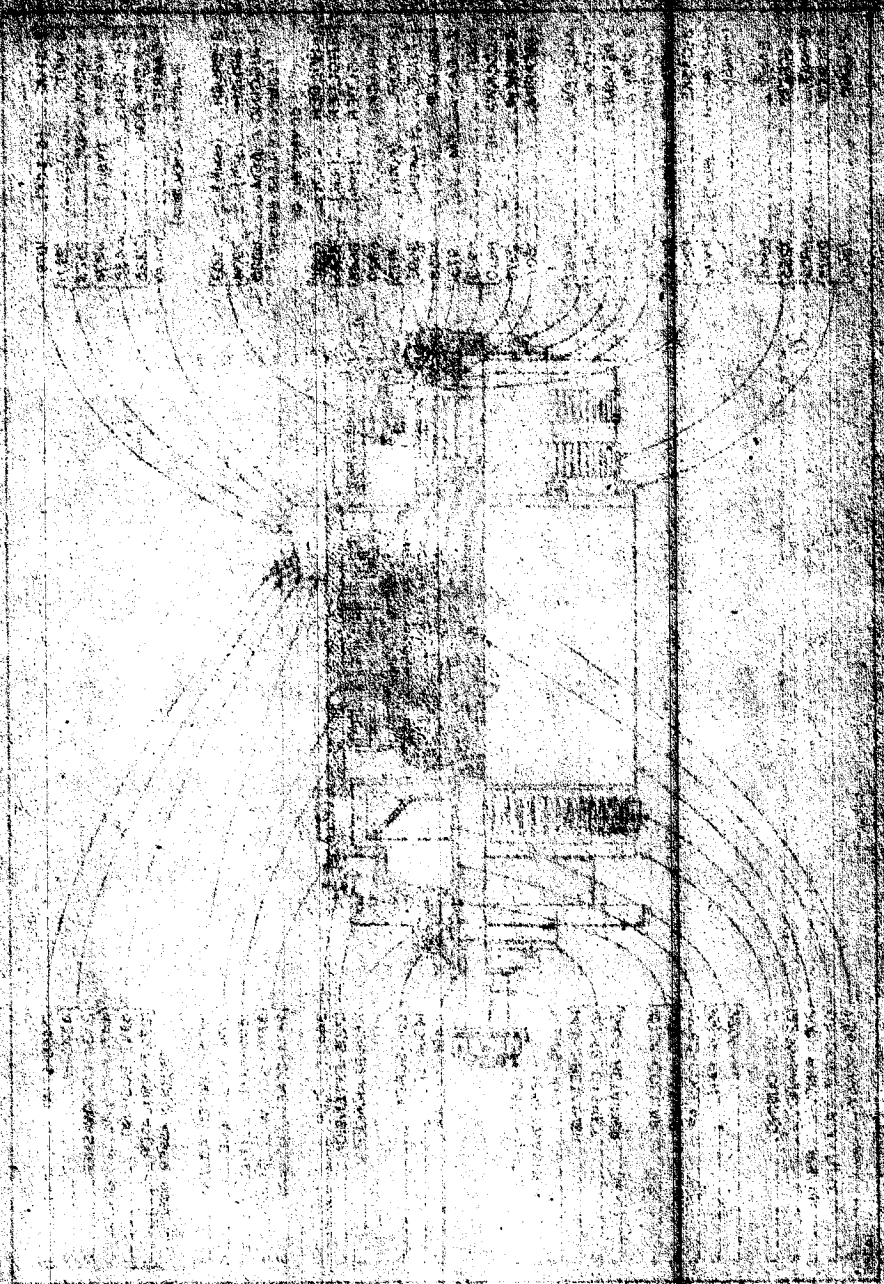

ГЕЕСЕ ИЕЛИГЕ СЕНЕВУЛОК ЛАЬЕ

# LEECE-NEVILLE GENERATOR TYPE 1945G

Manufacturer
LEECE-NEVILLE COMPANY
5363 Hamilton Avenue N. E.
Cleveland, Ohio

For Parts Service on this Generator, Order from the Manufacturer or his Representative

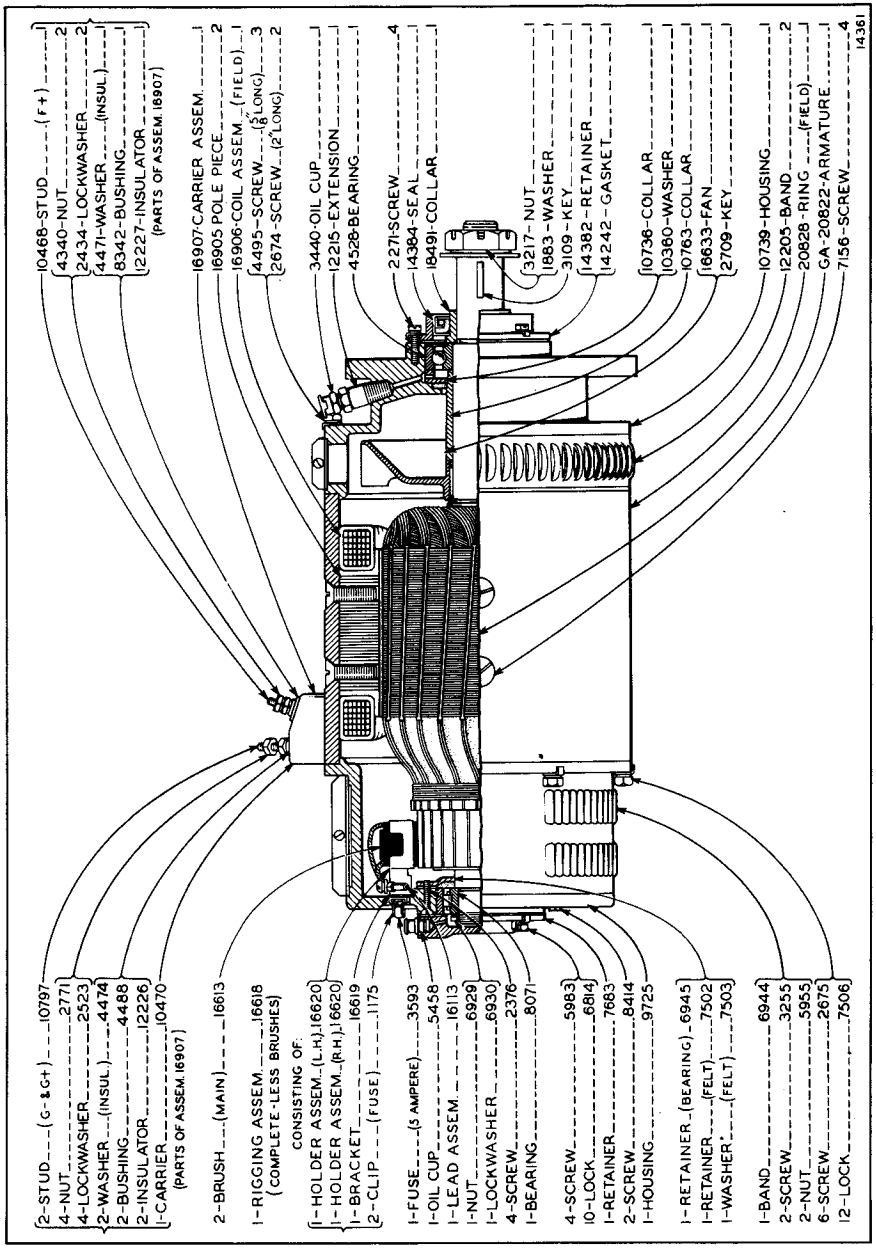


"CATERPILLAR" NO. 5B9779

NUMBERS SHOWN ARE MANUFACTURERS, NOT "CATERPILLAR" PART NUMBERS, EXCEPT WHEN SPECIFIED.

Form 1736 Printed in U. S. A. Issue 1 12-1-40

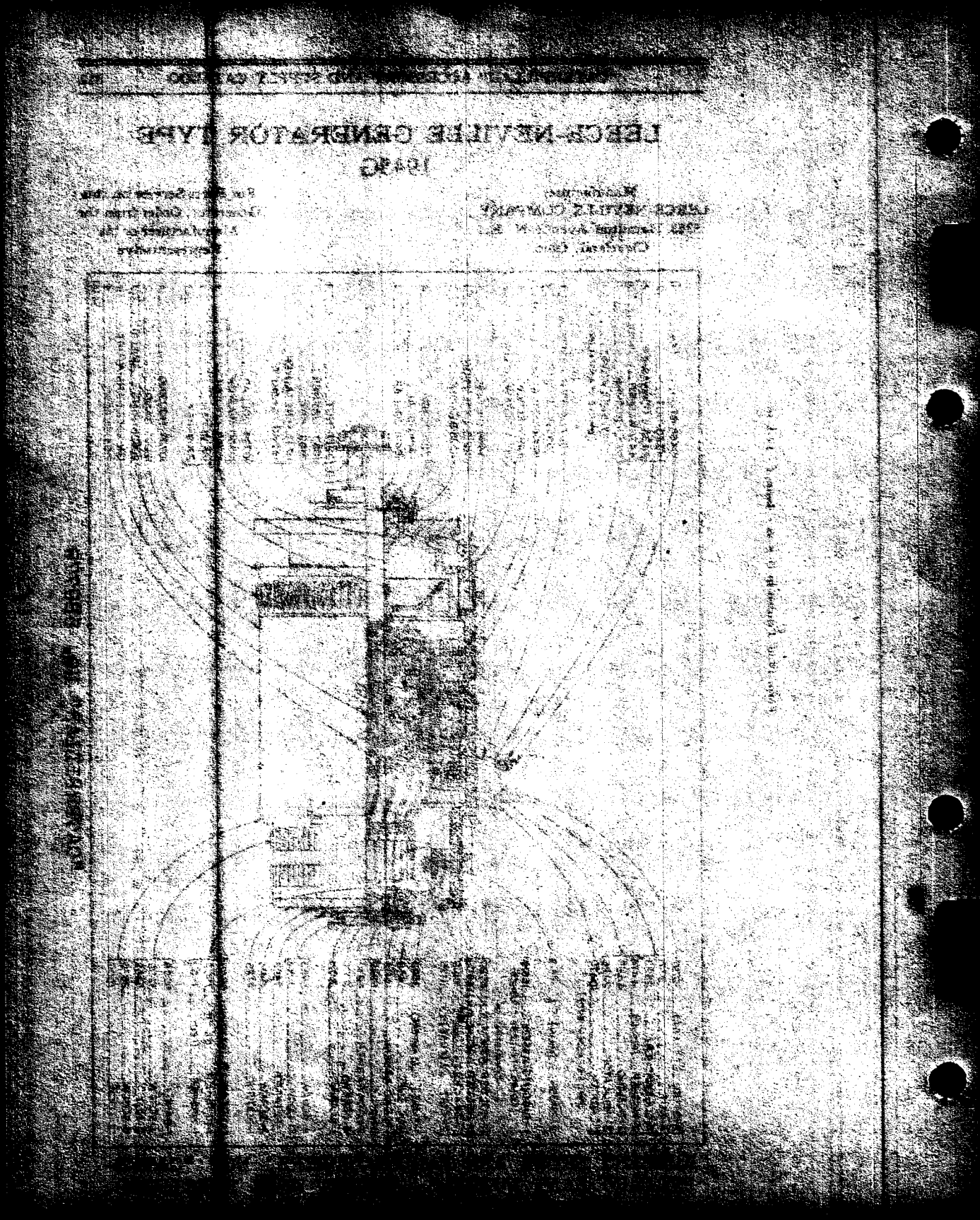

# LEECE-NEVILLE GENERATOR TYPE 1496G

Manufacturer
**LEECE-NEVILLE COMPANY**
5363 Hamilton Avenue N. E.
Cleveland, Ohio

For Parts Service on this Generator, Order from the Manufacturer or his Representative

Form 1736 Printed in U. S. A. Issue 1 8-15-40

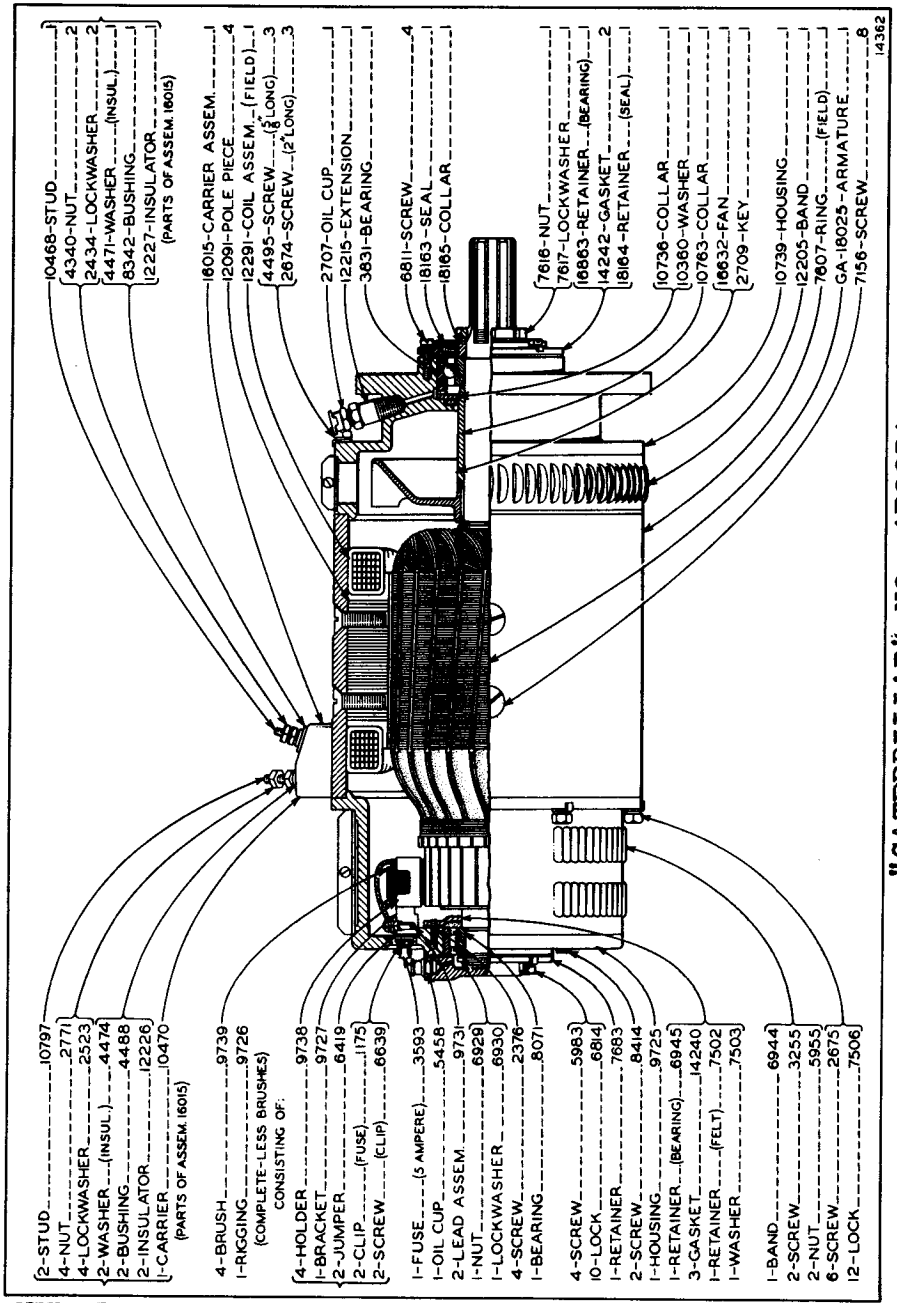


"CATERPILLAR" NO. 4B2034

NUMBERS SHOWN ARE MANUFACTURERS, NOT "CATERPILLAR" PART NUMBERS, EXCEPT WHEN SPECIFIED.

# LEECE-NEVILLE GENERATOR TYPE 1957G

Manufacturer
LEECE-NEVILLE COMPANY
5363 Hamilton Avenue N. E.
Cleveland, Ohio

For Parts Service on this Generator, Order from the Manufacturer or his Representative

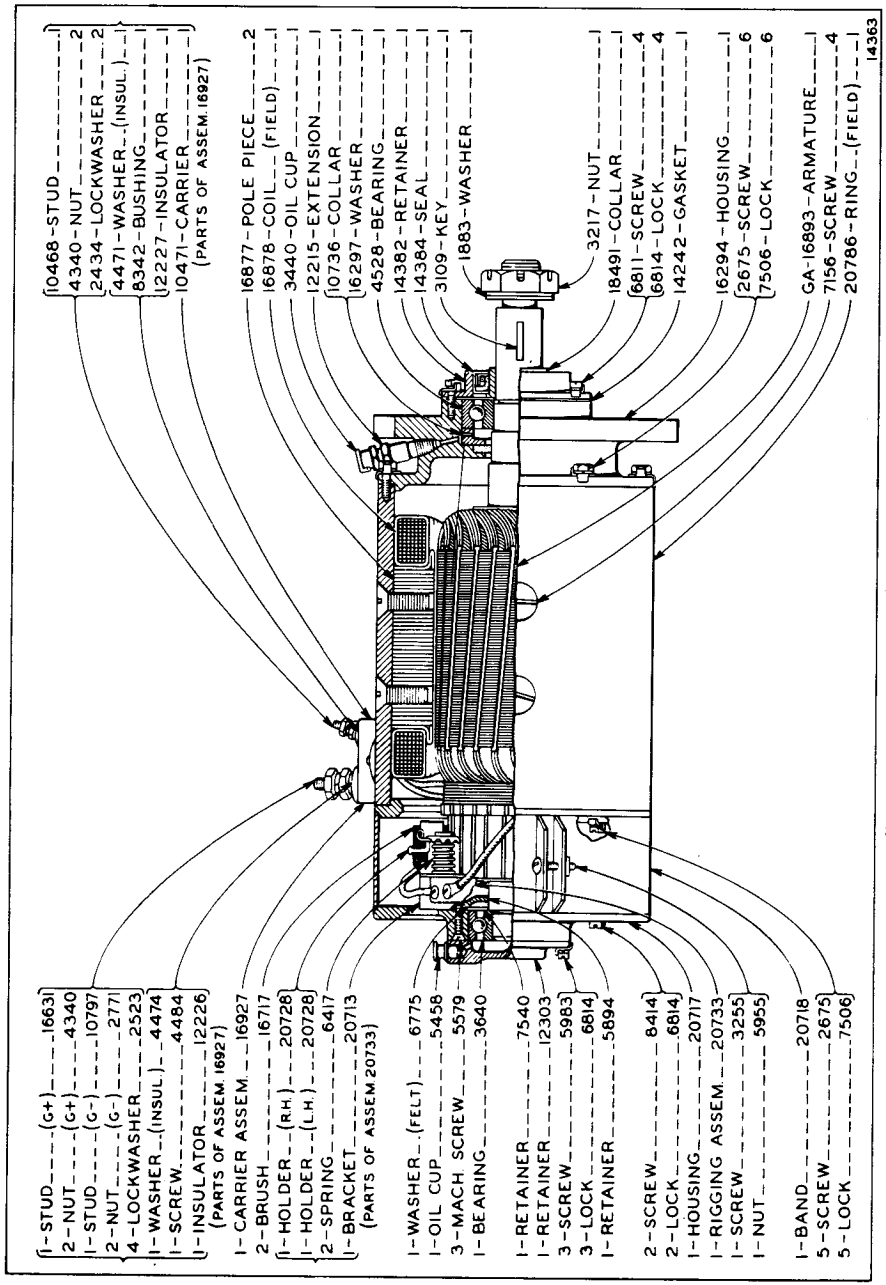


"CATERPILLAR" NO. 6B2333

NUMBERS SHOWN ARE MANUFACTURERS, NOT "CATERPILLAR" PART NUMBERS, EXCEPT WHEN SPECIFIED.

Form 1736 Printed in U.S.A. Issue 1 11-1-40

# LEECE-NEVILLE REGULATOR TYPE 1745R

Manufacturer
LEECE-NEVILLE COMPANY
5363 Hamilton Avenue N. E.
Cleveland, Ohio

For Parts Service on this Regulator, Order from the Manufacturer or his Representative

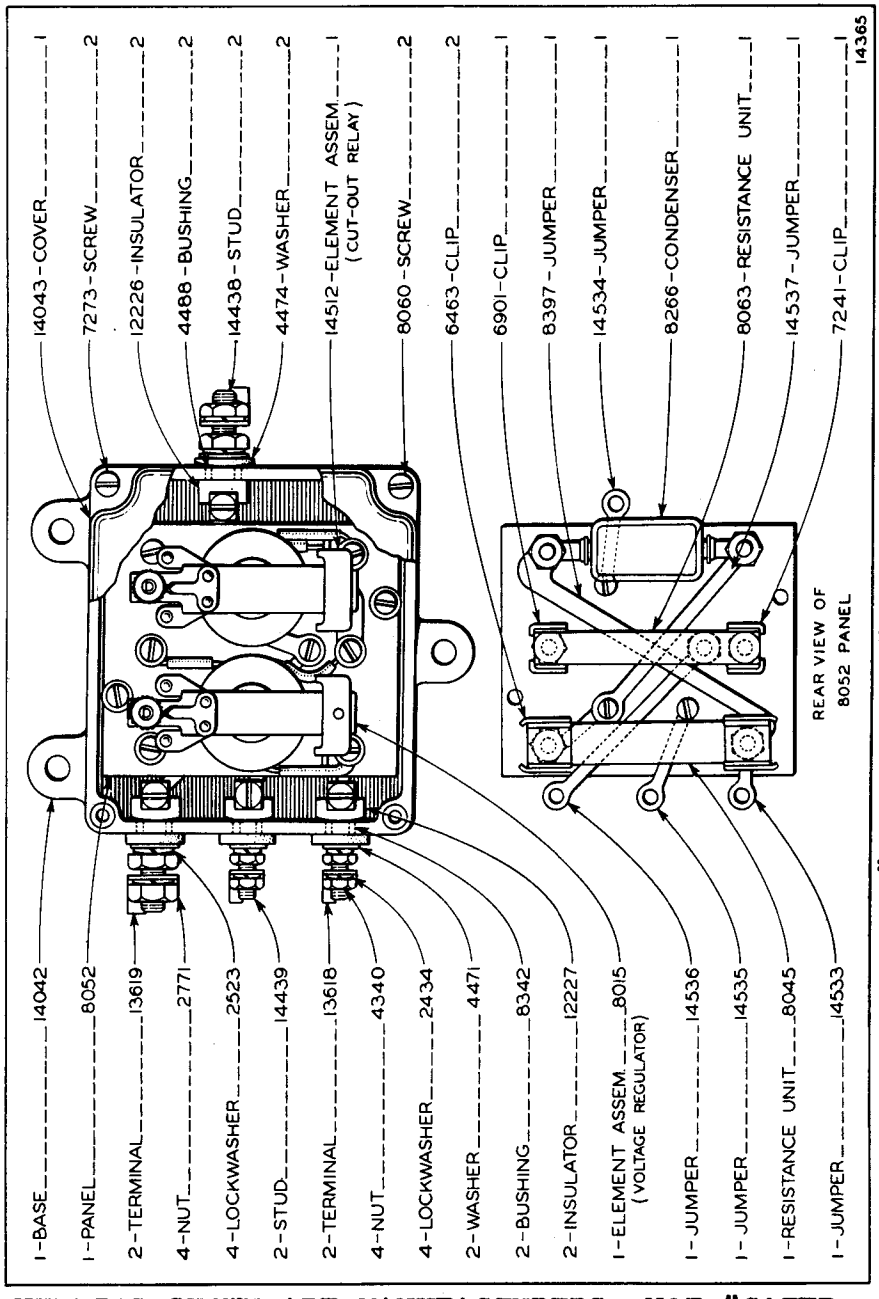


NUMBERS SHOWN ARE MANUFACTURERS, NOT "CATERPILLAR" PART NUMBERS, EXCEPT WHEN SPECIFIED.

Form 1736 Printed in U. S. A. Issue 1 8-15-40

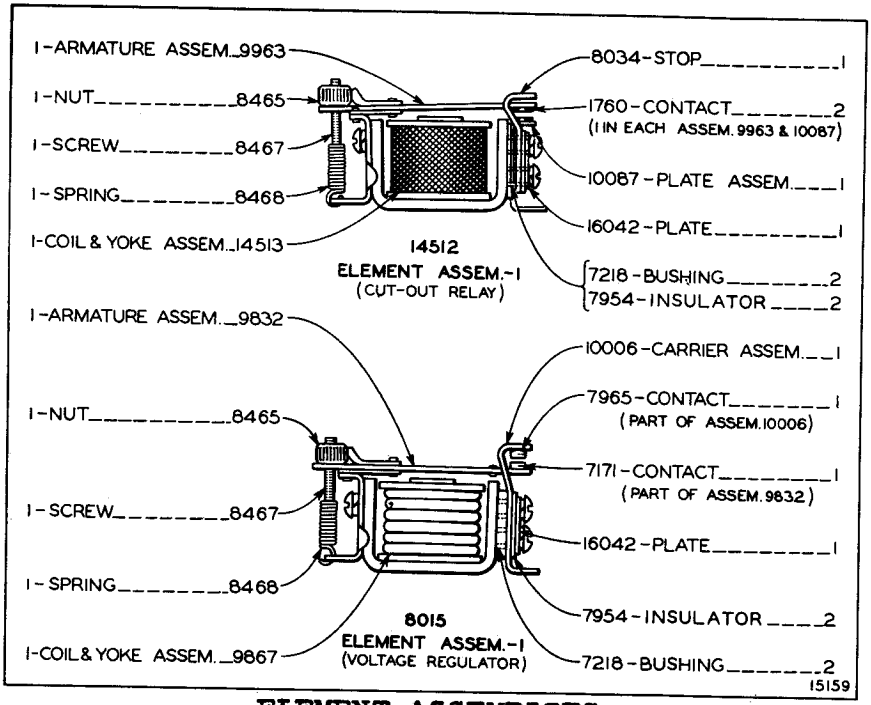


**ELEMENT ASSEMBLIES**
**(Part of "Caterpillar" No. 4B3247)**

# LEECE-NEVILLE REGULATOR TYPE 29R

Manufacturer
LEECE-NEVILLE Company
5363 Hamilton Avenue N.E.
Cleveland, Ohio

For Parts Service on this Regulator, Order from the Manufacturer or his Representative

Form 1736 Printed in U. S. A. Issue 1 4-1-40

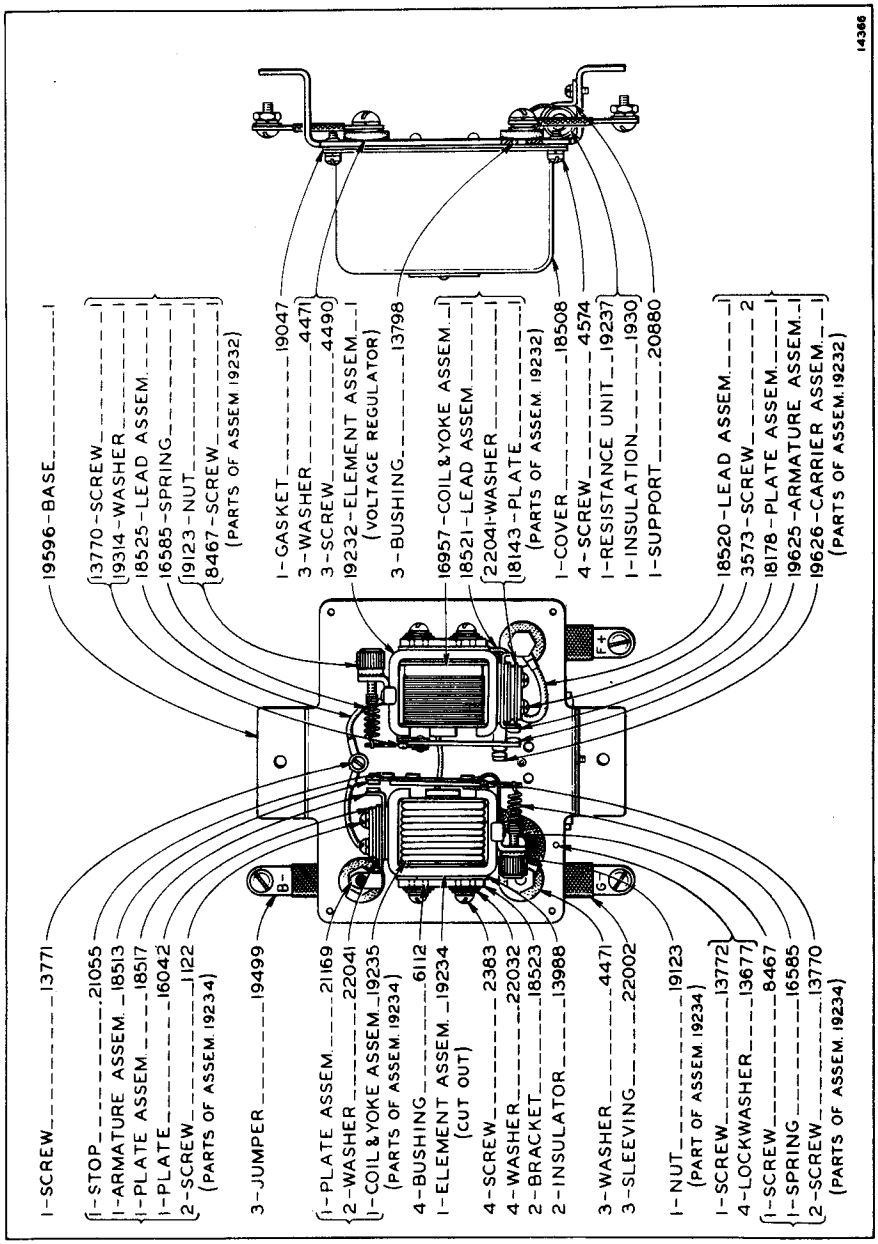


"CATERPILLAR" NO. 5B8221

NUMBERS SHOWN ARE MANUFACTURERS, NOT "CATERPILLAR" PART NUMBERS, EXCEPT WHEN SPECIFIED.

# LEECE-NEVILLE REGULATOR TYPE
## 1929R and 2128R

Manufacturer
LEECE-NEVILLE Company
5363 Hamilton Avenue N.E.
Cleveland, Ohio

For Parts Service on this Regulator, Order from the Manufacturer or his Representative

Form 1736 Printed in U.S.A. Issue 1 5-1-40

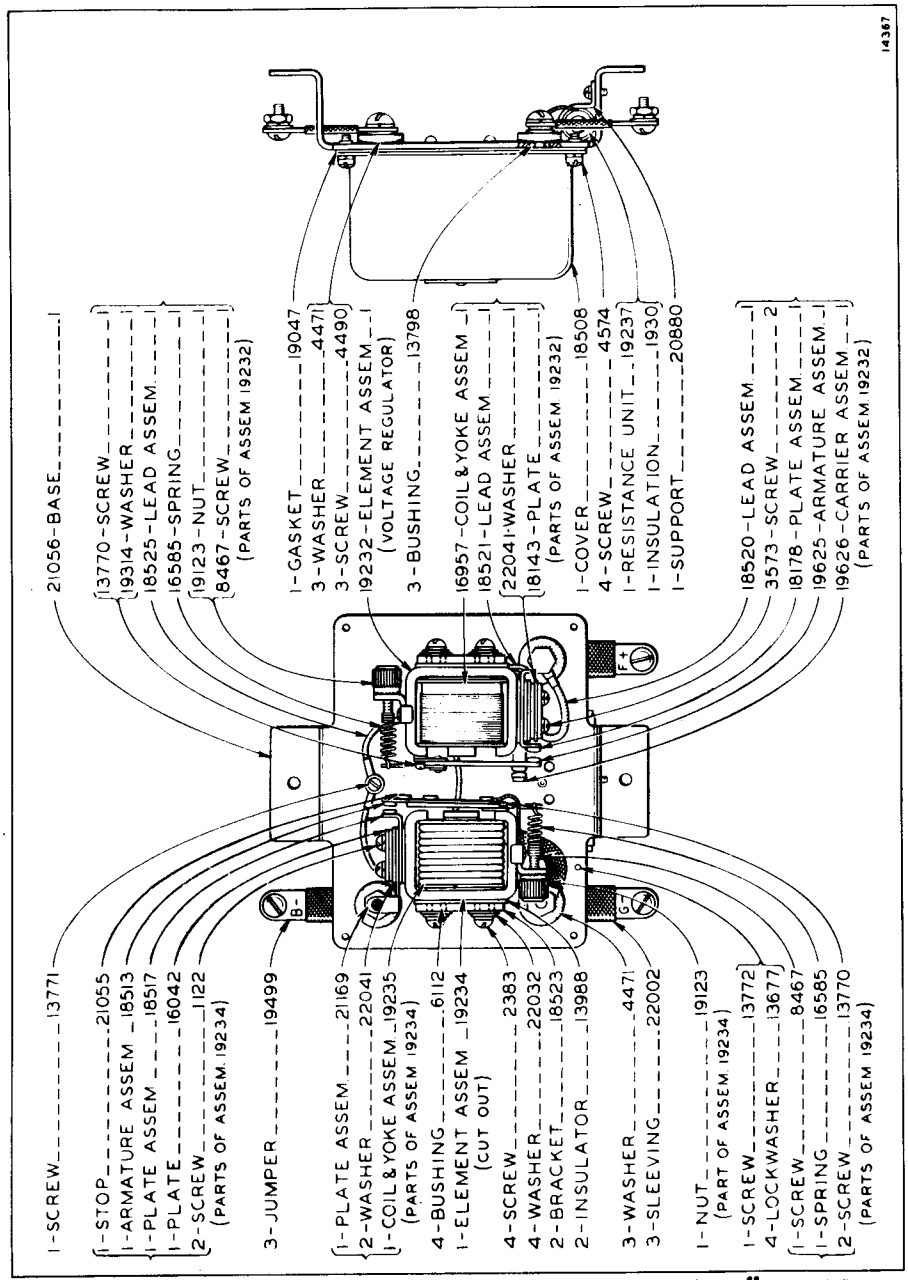


"CATERPILLAR" NO. 6B3099 and 7B989

NUMBERS SHOWN ARE MANUFACTURERS, NOT "CATERPILLAR" PART NUMBERS, EXCEPT WHEN SPECIFIED.

# LEECE-NEVILLE REGULATOR TYPE 1910-R, 1911-R, 1960-R, 1961-R, 2031-R & 2109R

Manufacturer
LEECE-NEVILLE Company
5363 Hamilton Avenue N.E.
Cleveland, Ohio

For Parts Service on this Regulator, Order from the Manufacturer or his Representative




NUMBERS SHOWN ARE MANUFACTURERS', NOT "CATERPILLAR" PART NUMBERS, EXCEPT WHEN SPECIFIED.

"Caterpillar" No. 4B9761 (1910-R), No. 6B1137 (1960-R)
No. 6B1364 (1911-R), No. 6B1365 (1961-R)
No. 7B6922 (2109-R), No. 7B6923 (2031-R)

Remove Issue 1 and insert this in its place.

Form 1736 Printed in U.S.A. Issue 2 11-1-40

# LEECE- NEVILLE REGULATOR TYPE 1496-R & 1497-R

Manufacturer
**LEECE-NEVILLE** Company
5363 Hamilton Avenue N.E.
Cleveland, Ohio

For Parts Service on this Regulator, Order from the Manufacturer or his Representative

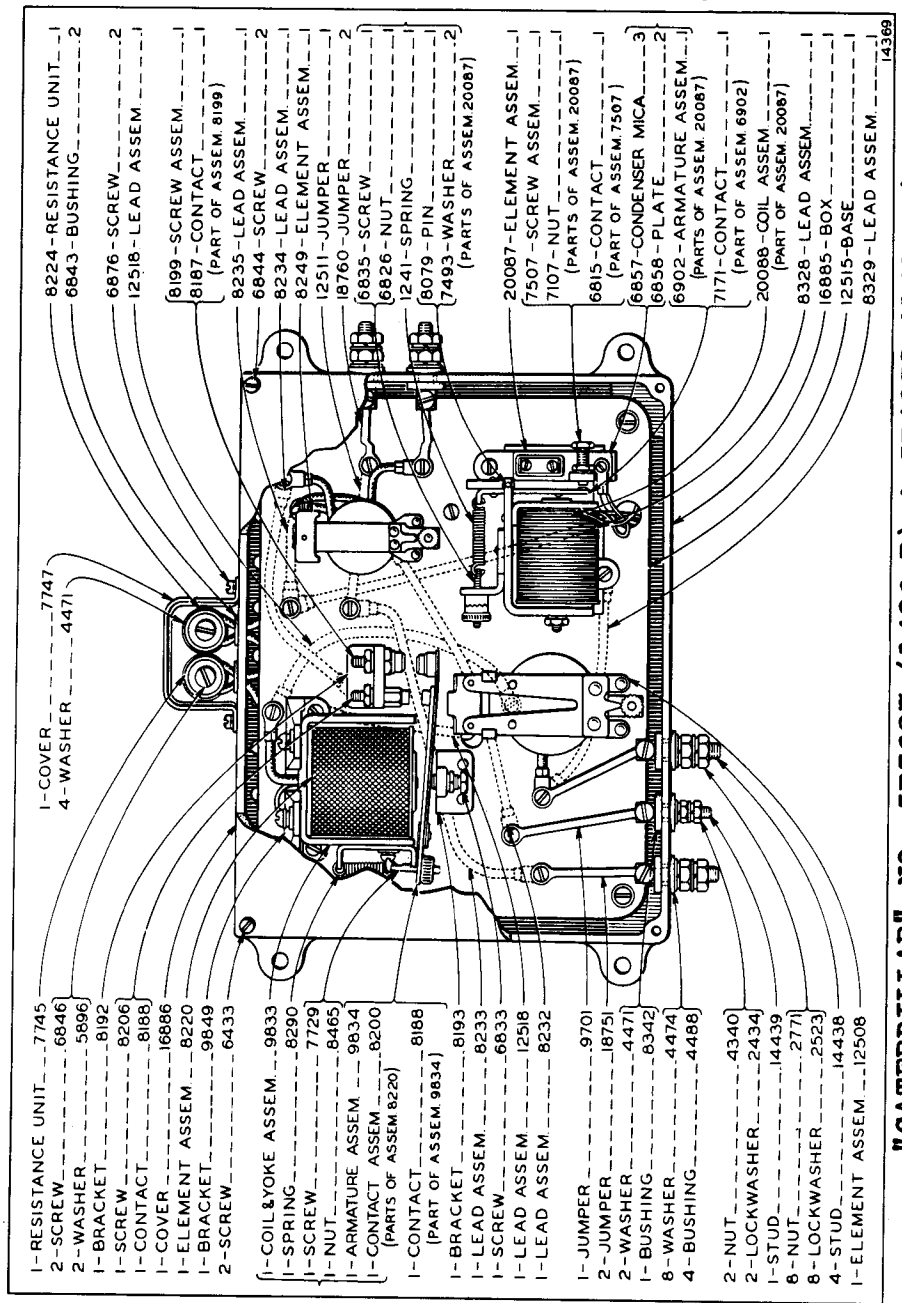


"CATERPILLAR" NO. 5B3697 (1496-R) & 5B4832 (1497-R)

NOTE: See back of page for 12508 & 8249 Element Assembly parts.

NUMBERS SHOWN ARE MANUFACTURERS, NOT "CATERPILLAR" PART NUMBERS, EXCEPT WHEN SPECIFIED.

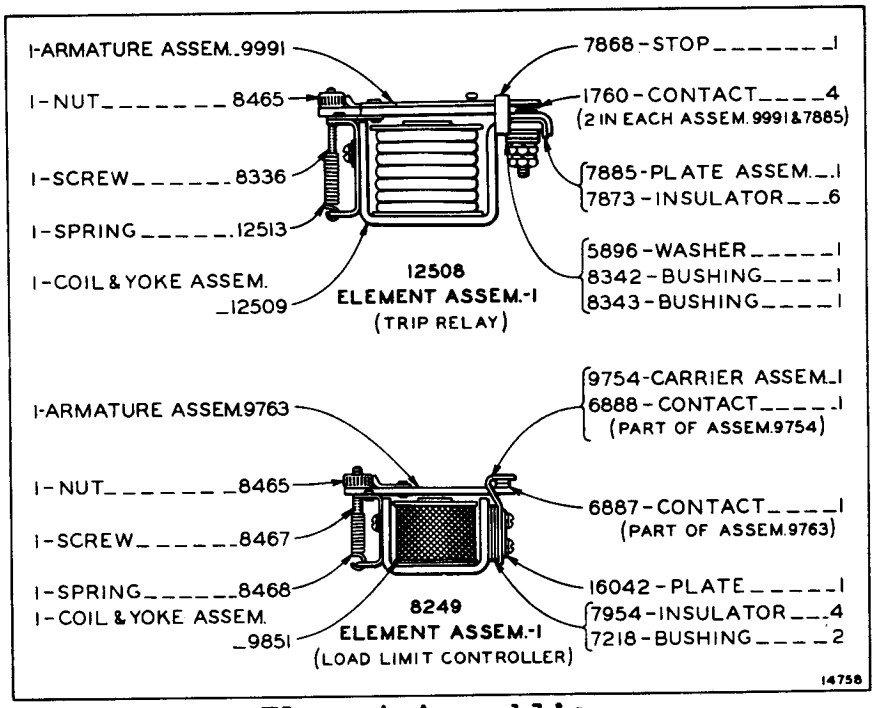


**Element Assemblies**
**(Part of "Caterpillar" No. 5B3697 & 5B4832)**

**NUMBERS SHOWN ARE MANUFACTURERS, NOT "CATERPILLAR" PART NUMBERS, EXCEPT WHEN SPECIFIED.**

Form 1736 Printed in U. S. A. Issue 1 4-1-40

# LEECE-NEVILLE STARTING MOTOR
## TYPE 1212M

Manufacturer
LEECE-NEVILLE Company
5363 Hamilton Avenue N.E.
Cleveland, Ohio

For Parts Service on this Starting Motor, Order from the Manufacturer or his Representative




"CATERPILLAR" NO. 4B7272

NOTE: SEE BACK OF PAGE FOR 12868 BENDIX DRIVE PARTS.

NUMBERS SHOWN ARE MANUFACTURERS, NOT "CATERPILLAR" PART NUMBERS, EXCEPT WHEN SPECIFIED.

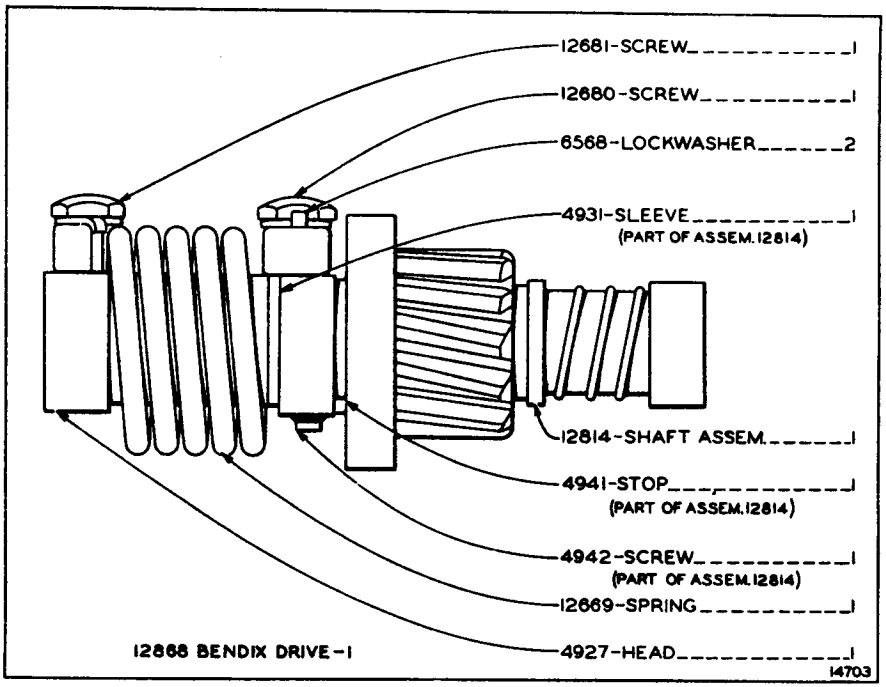
12681-SCREW_____1
12680-SCREW_____1
6568-LOCKWASHER_____2
4931-SLEEVE_____1
(PART OF ASSEM. 12814)
12814-SHAFT ASSEM._____1
4941-STOP_____1
(PART OF ASSEM. 12814)
4942-SCREW_____1
(PART OF ASSEM. 12814)
12669-SPRING_____1
4927-HEAD_____1
12868 BENDIX DRIVE-1
14703

# LEECE-NEVILLE STARTING MOTOR TYPE 1330M

Manufacturer
**LEECE-NEVILLE** Company
5363 Hamilton Avenue N.E.
Cleveland, Ohio

For Parts Service on this Starting Motor, Order from the Manufacturer or his Representative

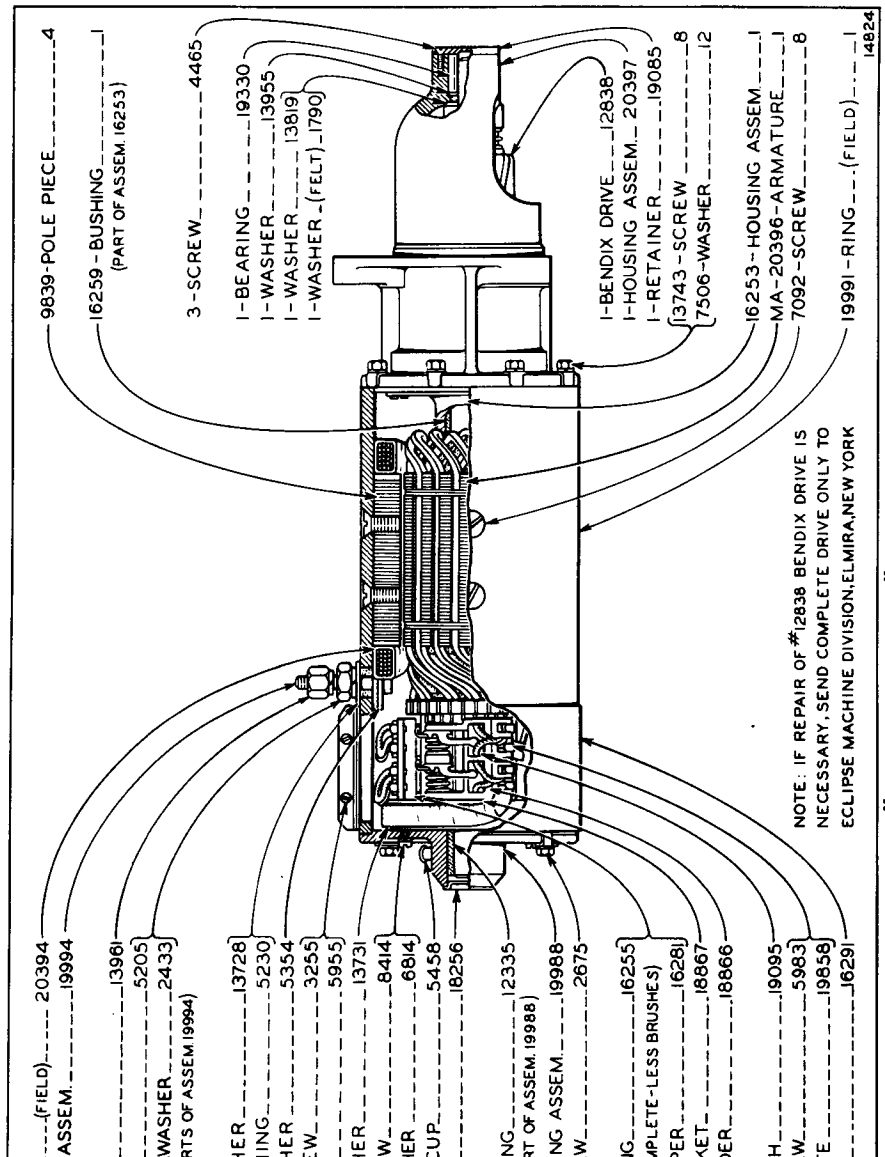


"CATERPILLAR" NO. 6B3184

NUMBERS SHOWN ARE MANUFACTURERS, NOT "CATERPILLAR" PART NUMBERS, EXCEPT WHEN SPECIFIED.

Form 1736 Printed in U.S.A. Issue 1 5-1-40

# LEECE-NEVILLE STARTING MOTOR TYPE 1220M

Manufacturer
LEECE-NEVILLE COMPANY
5363 Hamilton Avenue N. E.
Cleveland, Ohio

For Parts Service on this Starting Motor, Order from the Manufacturer or his Representative

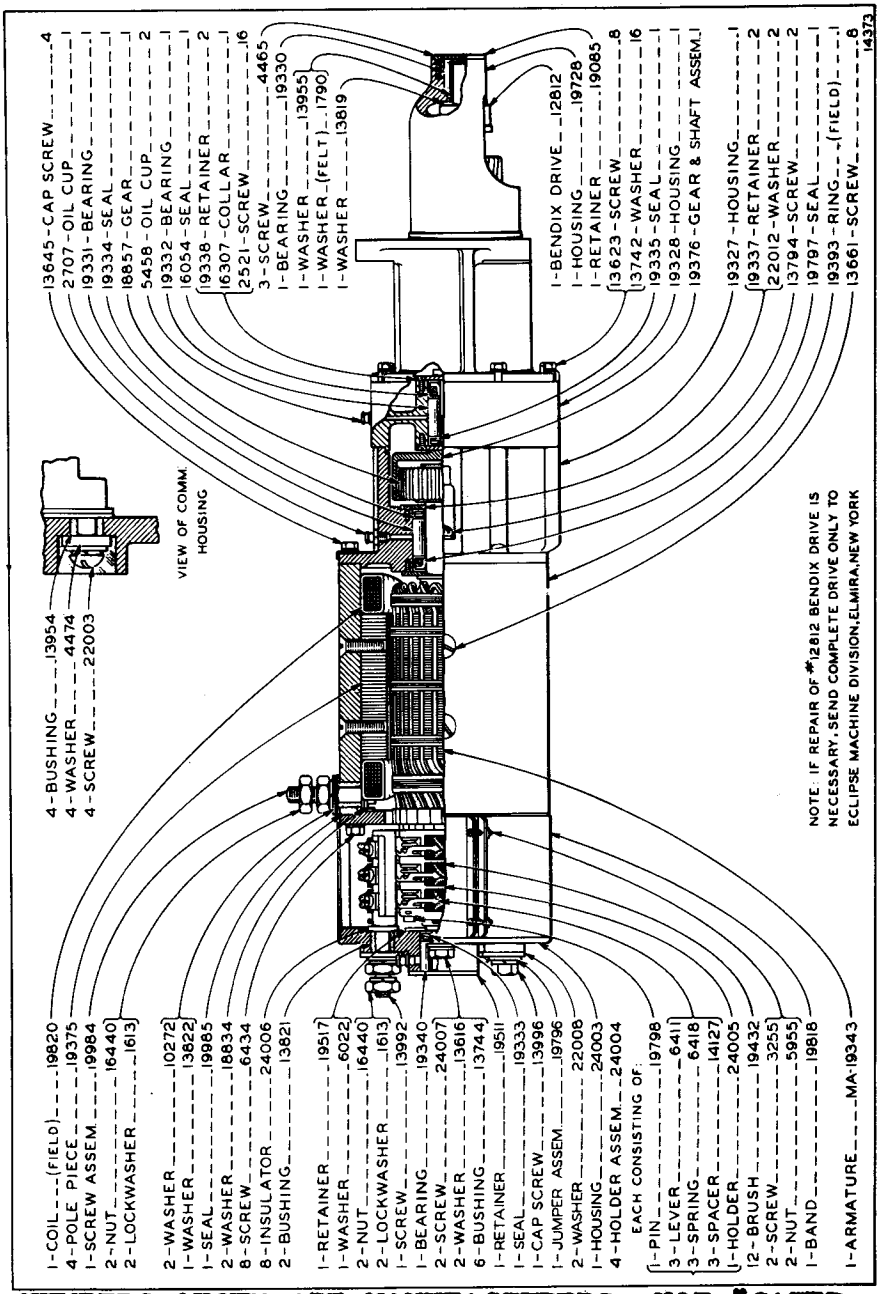


"CATERPILLAR" NO. 5B561

**NUMBERS SHOWN ARE MANUFACTURERS, NOT "CATERPILLAR" PART NUMBERS, EXCEPT WHEN SPECIFIED.**

Form 1736 Printed in U. S. A. Issue 1 7-1-40

# LEECE-NEVILLE STARTING MOTOR SWITCH TYPE 117S

Manufacturer
LEECE-NEVILLE Company
5363 Hamilton Avenue N.E.
Cleveland, Ohio

For Parts Service on this Switch, Order from the Manufacturer or his Representative

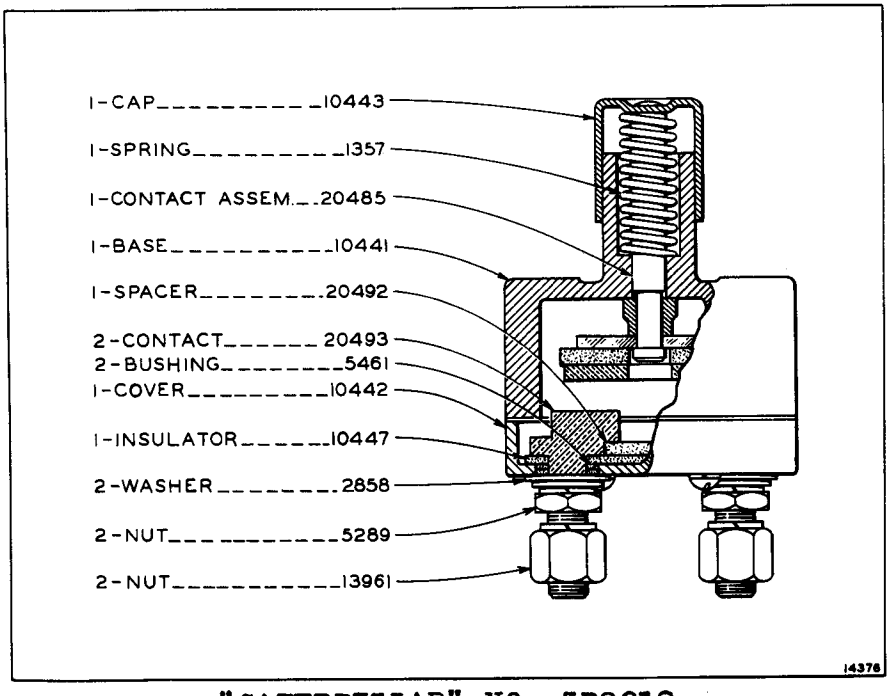


"CATERPILLAR" NO. 5B8012

NUMBERS SHOWN ARE MANUFACTURERS, NOT "CATERPILLAR" PART NUMBERS, EXCEPT WHEN SPECIFIED.

Form 1736 Printed in U. S. A. Issue 1 4-1-40

# LEECE-NEVILLE STARTING MOTOR SWITCH TYPE 27-MS-12

Manufacturer
**LEECE-NEVILLE** Company
5363 Hamilton Avenue N.E.
Cleveland, Ohio

For Parts Service on this Switch, Order from the Manufacturer or his Representative

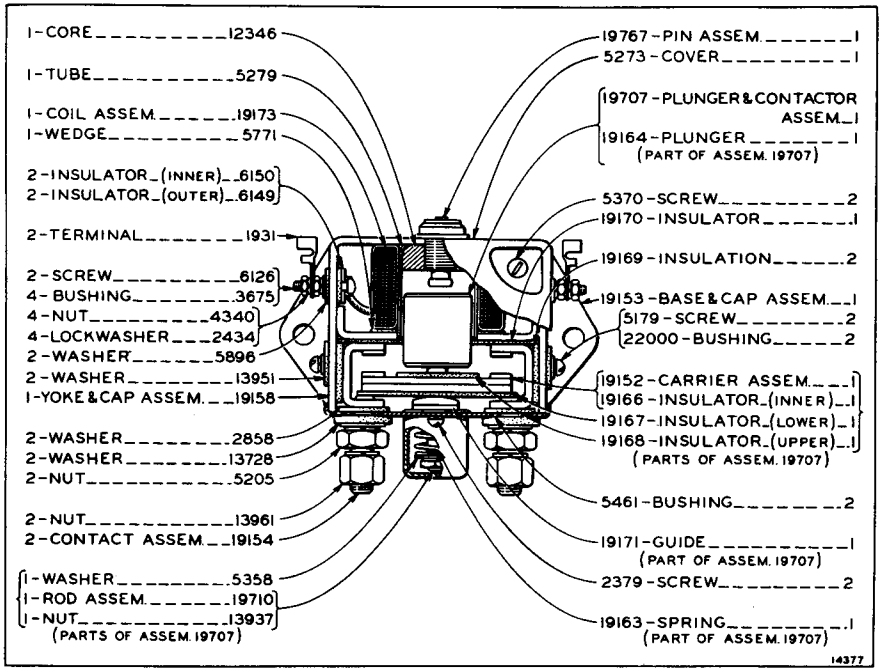


"CATERPILLAR" NO. 4B7529

NUMBERS SHOWN ARE MANUFACTURERS, NOT "CATERPILLAR" PART NUMBERS, EXCEPT WHEN SPECIFIED.

Form 1736 Printed in U.S.A. Issue 1 5-1-40

# LEECE-NEVILLE STARTING MOTOR SWITCH TYPE 31-MS-12

Manufacturer
**LEECE-NEVILLE** Company
5363 Hamilton Avenue N.E.
Cleveland, Ohio

For Parts Service on this Switch, Order from the Manufacturer or his Representative

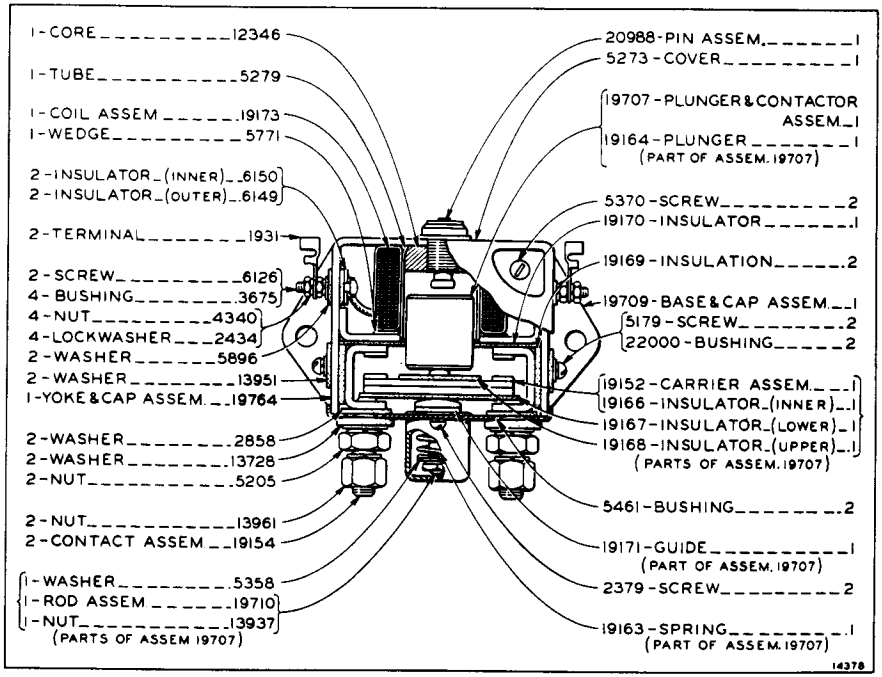


"CATERPILLAR" NO. 6B7257

NUMBERS SHOWN ARE MANUFACTURERS, NOT "CATERPILLAR" PART NUMBERS, EXCEPT WHEN SPECIFIED.

Form 1736 Printed in U.S.A. Issue 1 5-1-40

# LEECE-NEVILLE STARTING MOTOR SWITCH TYPE 121S

Manufacturer
LEECE-NEVILLE Company
5363 Hamilton Avenue N.E.
Cleveland, Ohio

**For Parts Service on this Switch, Order from the Manufacturer or his Representative**

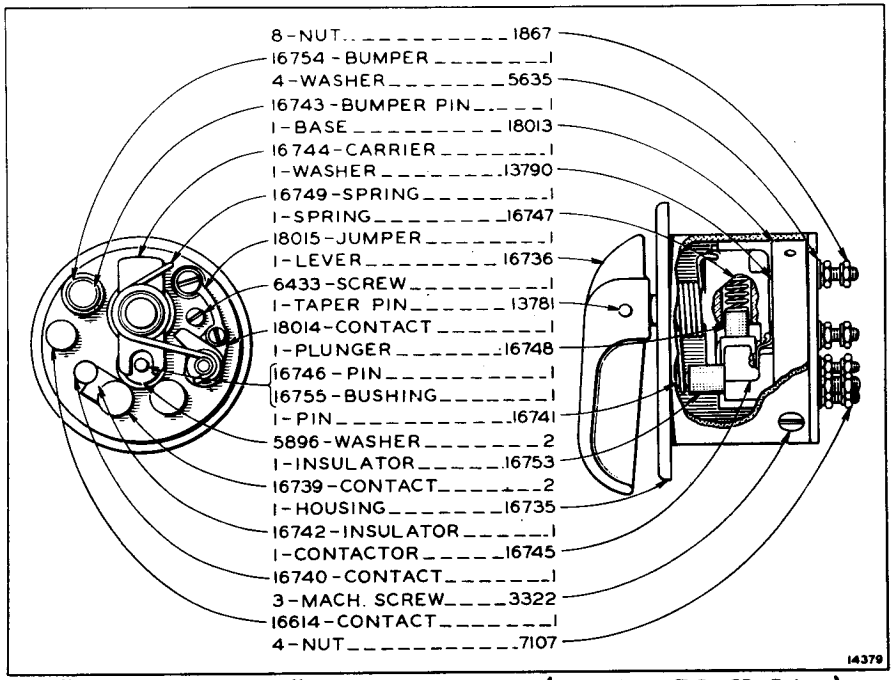


**"CATERPILLAR" NO. 4B7343 (24 to 32 Volts)**
**"CATERPILLAR" NO. 5B83 (42 to 65 Volts)**

NUMBERS SHOWN ARE MANUFACTURERS, NOT "CATERPILLAR" PART NUMBERS, EXCEPT WHEN SPECIFIED.

REMOVE ISSUE 1 AND INSERT THIS IN ITS PLACE.

Form 1736 Printed in U.S.A. Issue 2 8-15-40

# LEECE-NEVILLE STARTING MOTOR SWITCH TYPE 1215

Manufacturer
LEECE-NEVILLE Company
5363 Hamilton Avenue N.E.
Cleveland, Ohio

For Parts Service on this switch, Order from the Manufacturer or his Representative

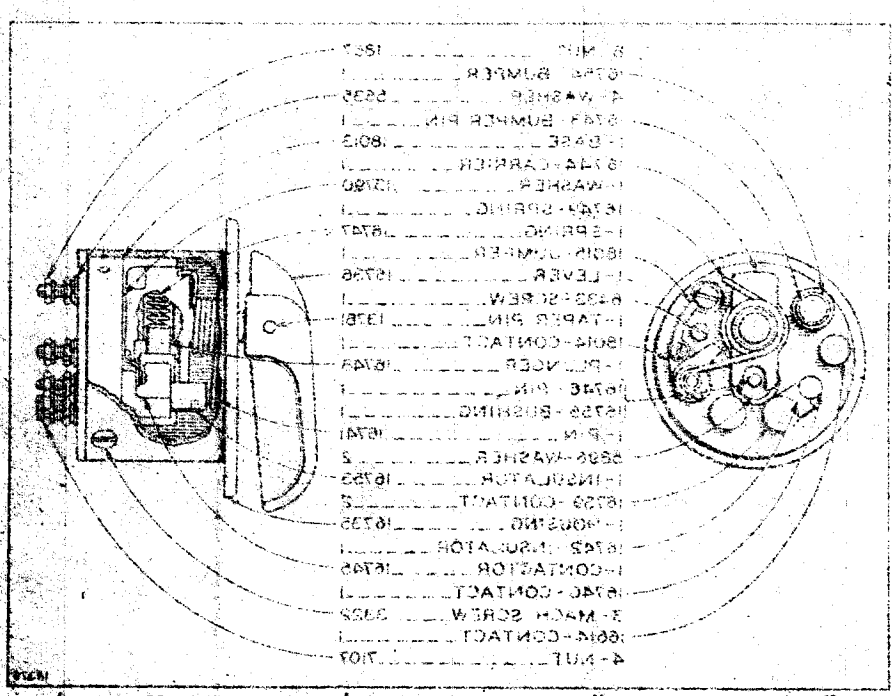


"CATERPILLAR" NO. 4B7343 (24 to 32 Volts)
"CATERPILLAR" NO. 5B83 (42 to 65 Volts)

NUMBERS SHOWN ARE MANUFACTURERS, NOT "CATERPILLAR" PART NUMBERS, EXCEPT WHEN SPECIFIED.

REMOVE ISSUE 1 AND INSERT THIS IN ITS PLACE.

# LEECE-NEVILLE STARTING MOTOR SWITCH TYPE 21-MS-24

Manufacturer
**LEECE-NEVILLE Company**
5363 Hamilton Avenue N.E.
Cleveland, Ohio

For Parts Service on this Switch, Order from the Manufacturer or his Representative

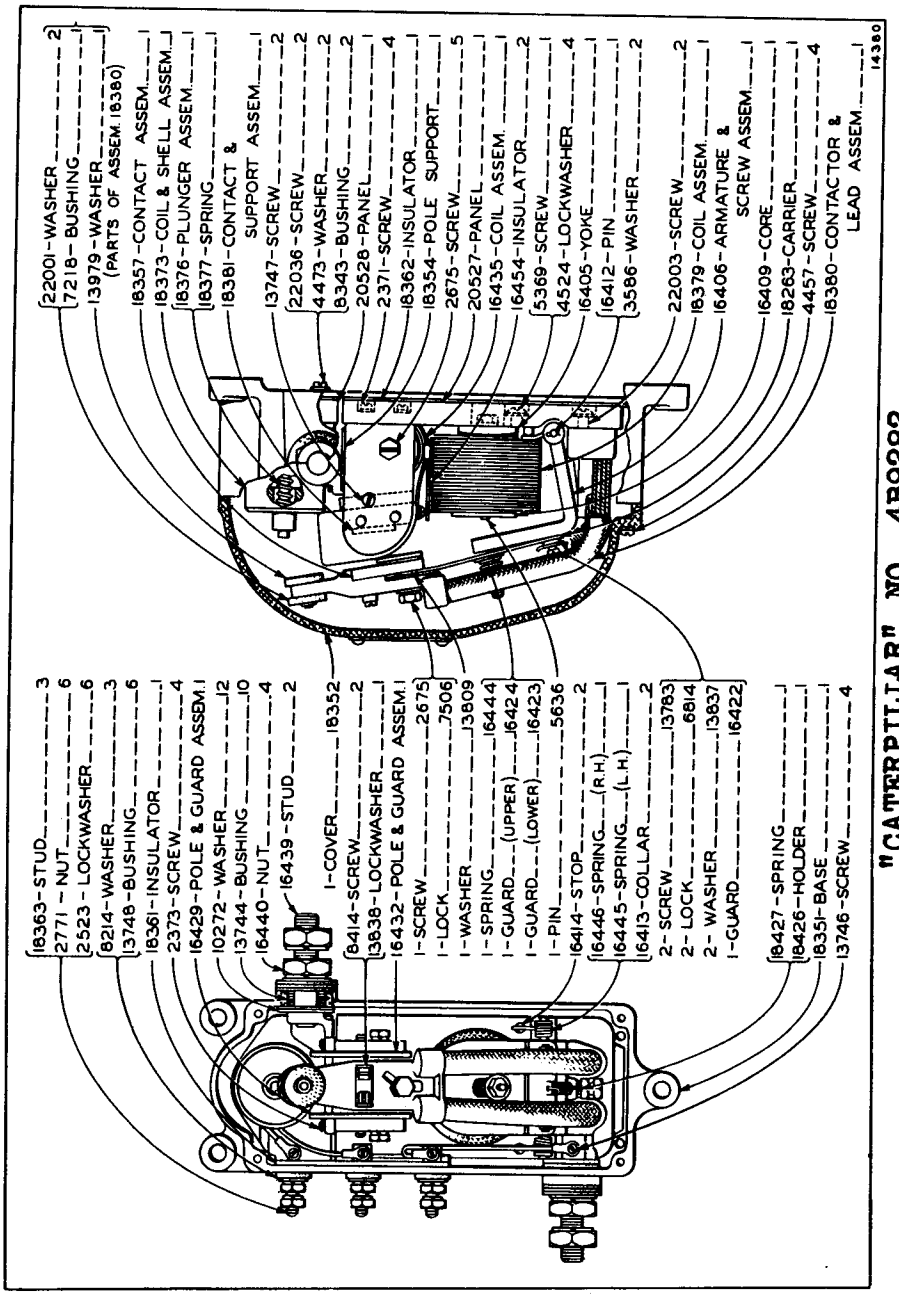


"CATERPILLAR" NO. 4B9282

**NUMBERS SHOWN ARE MANUFACTURERS, NOT "CATERPILLAR" PART NUMBERS, EXCEPT WHEN SPECIFIED.**

Form 1736 Printed in U.S.A. Issue 1 6-15-40

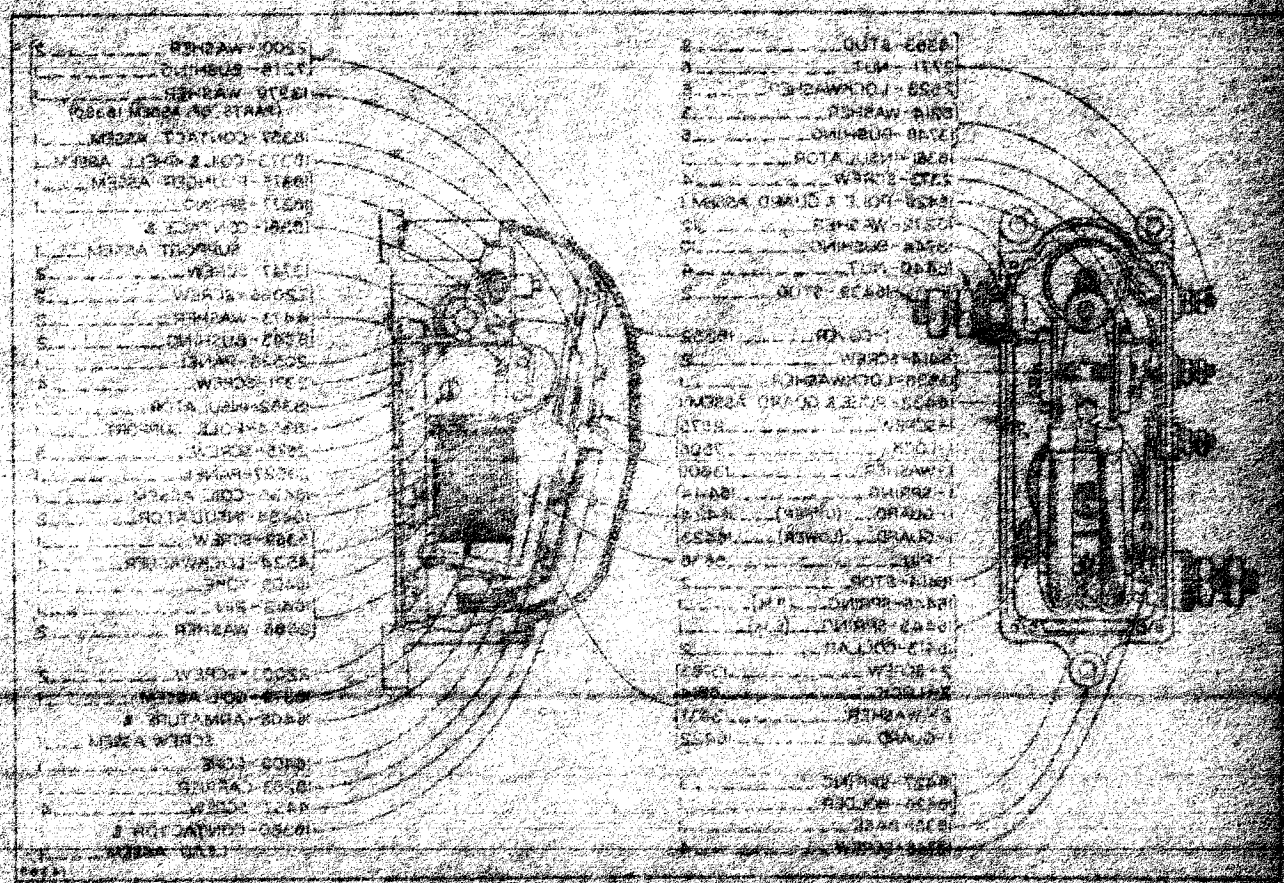

"CATERPILLAR" NO. 489282

Form 1780 Printed in U.S.A. Issue 1 6-15-40

# SWITCH TYPE 21-MS-24

## LEECE-NEVILLE STARTING MOTOR

Manufacturer
LEECE-NEVILLE Company
5365 Hamilton Avenue N.E.
Cleveland, Ohio

Pot Plate Service on Dia
Shield, Order Form Dia
Manufacturer of his
Replacement

# LEECE-NEVILLE STARTING MOTOR SWITCH TYPE 21-MS-48

Manufacturer
LEECE-NEVILLE Company
5363 Hamilton Avenue N.E.
Cleveland, Ohio

For Parts Service on this Switch, Order from the Manufacturer or his Representative

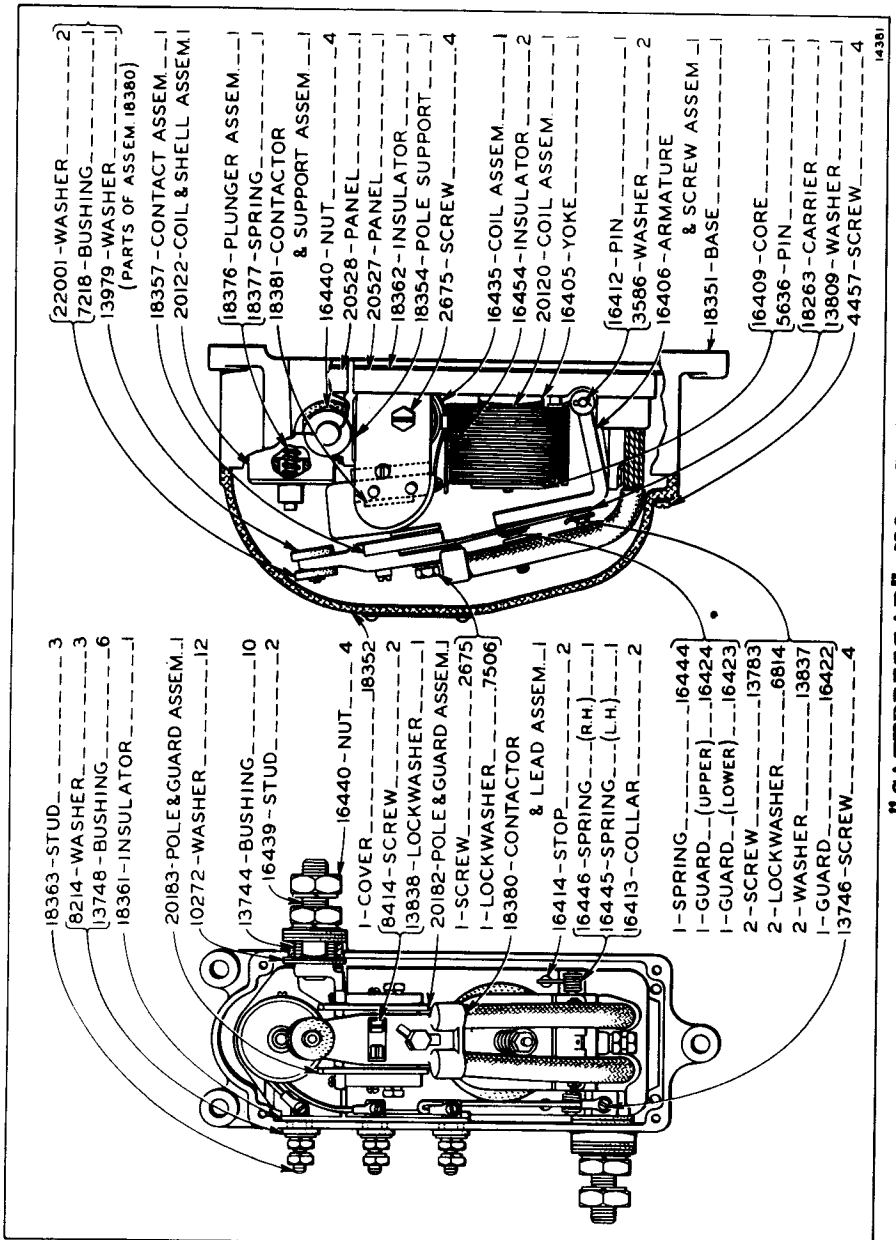


"CATERPILLAR" NO. 5B84

NUMBERS SHOWN ARE MANUFACTURERS, NOT "CATERPILLAR" PART NUMBERS, EXCEPT WHEN SPECIFIED.

Form 1736 Printed in U.S.A. Issue 1 5-1-40

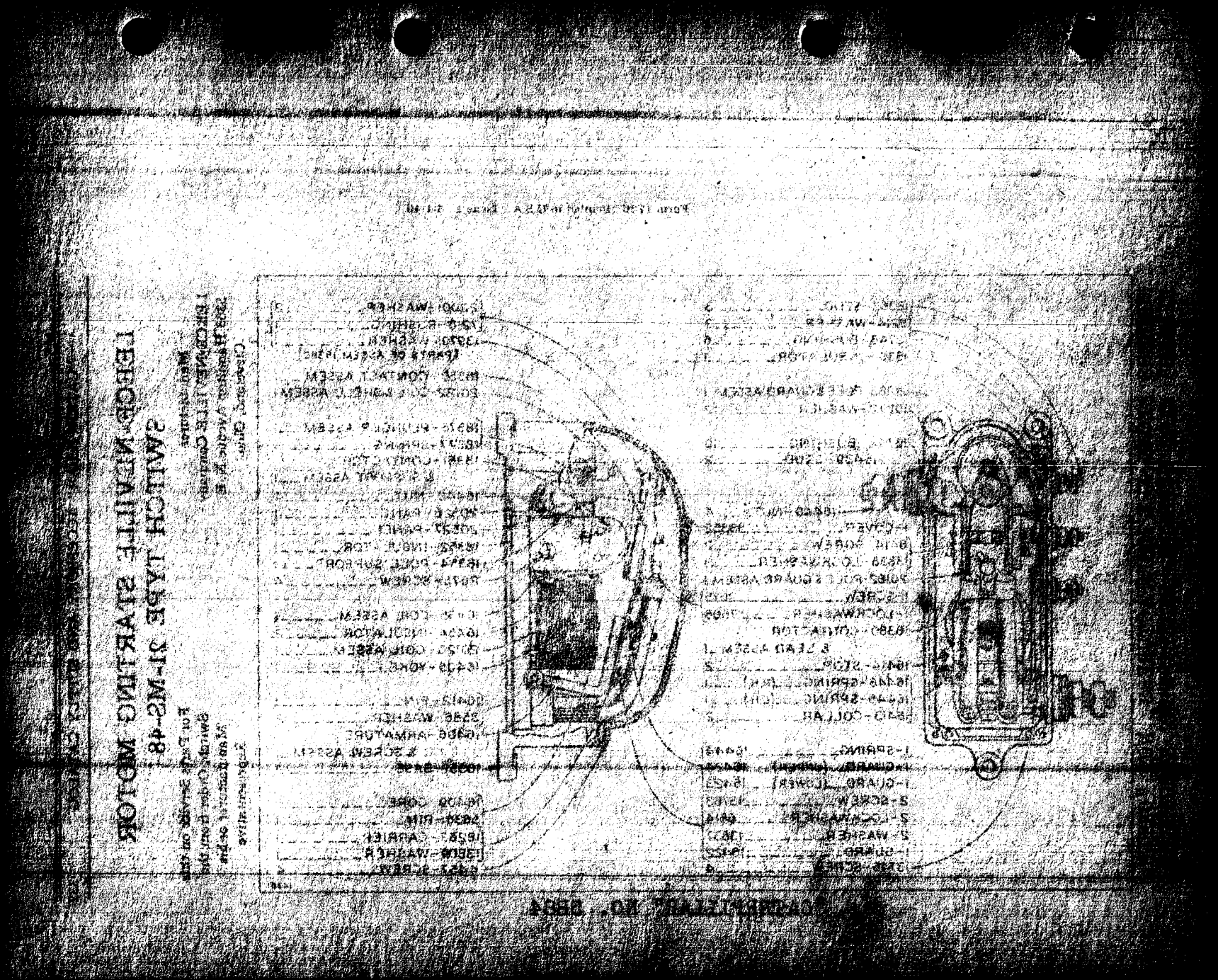

# LEECE-NEVILLE STARTING MOTOR TYPE 1177-M

Manufacturer
LEECE-NEVILLE Company
5363 Hamilton Avenue N.E.
Cleveland, Ohio

For Parts Service on this Starting Motor, Order from the Manufacturer or his Representative

Form 1736 Printed in U.S.A. Issue 1 6-15-40

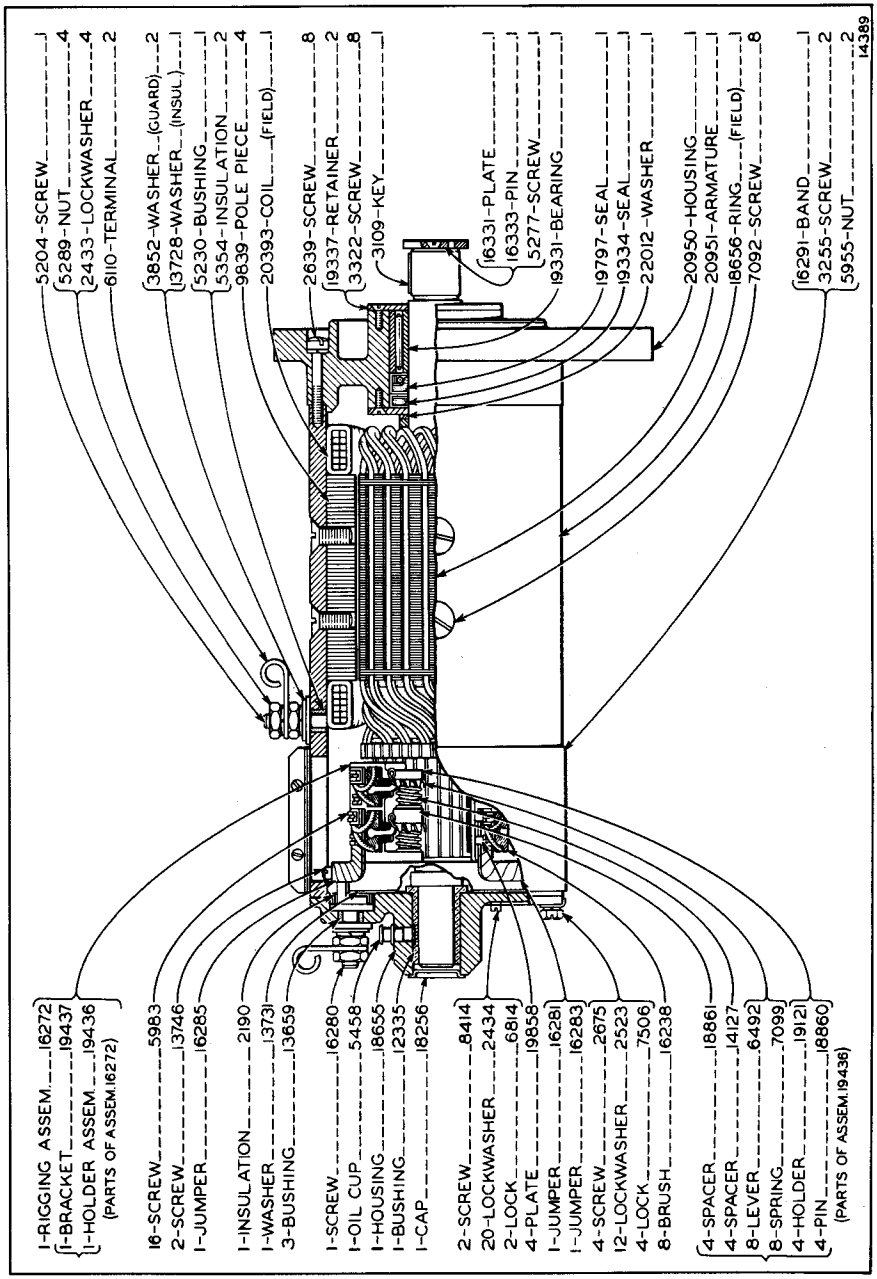


"CATERPILLAR" NO. 5B6060

NUMBERS SHOWN ARE MANUFACTURERS, NOT "CATERPILLAR" PART NUMBERS, EXCEPT WHEN SPECIFIED.

# ПЕРСОНАЛЬНЫЙ КОМПЬЮТЕР

# DONALDSON AIR CLEANER MODEL A-915

Manufacturer
DONALDSON COMPANY, Inc.
666 Pelham Street
Saint Paul, Minn.

For Parts Service on this Air Cleaner, Order from the Caterpillar Tractor Co. Peoria, Ill. or San Leandro, Cal.

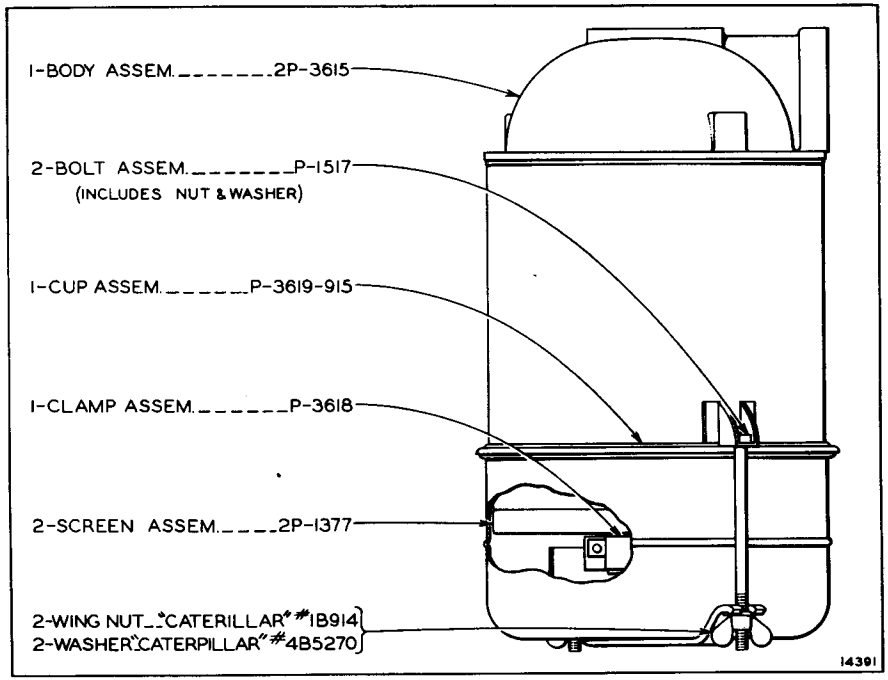


CATERPILLAR NO. 6B9984

Form 1736 Printed in U. S. A. Issue 1 3-1-40

NUMBERS SHOWN ARE MANUFACTURERS, NOT "CATERPILLAR" PART NUMBERS, EXCEPT WHEN SPECIFIED.

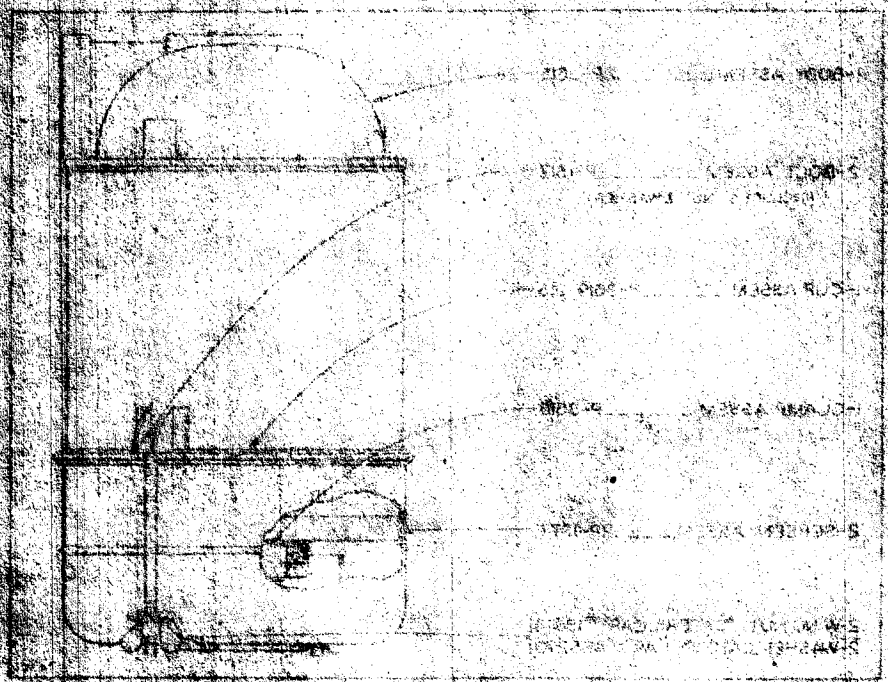

# EISEMANN MAGNETO MODEL GV-6

Manufacturer
**EISEMANN MAGNETO CORPORATION**
**60 East 42 Street - New York, N. Y.**

For Parts Service on this Magneto Order from the Manufacturer or his Representative

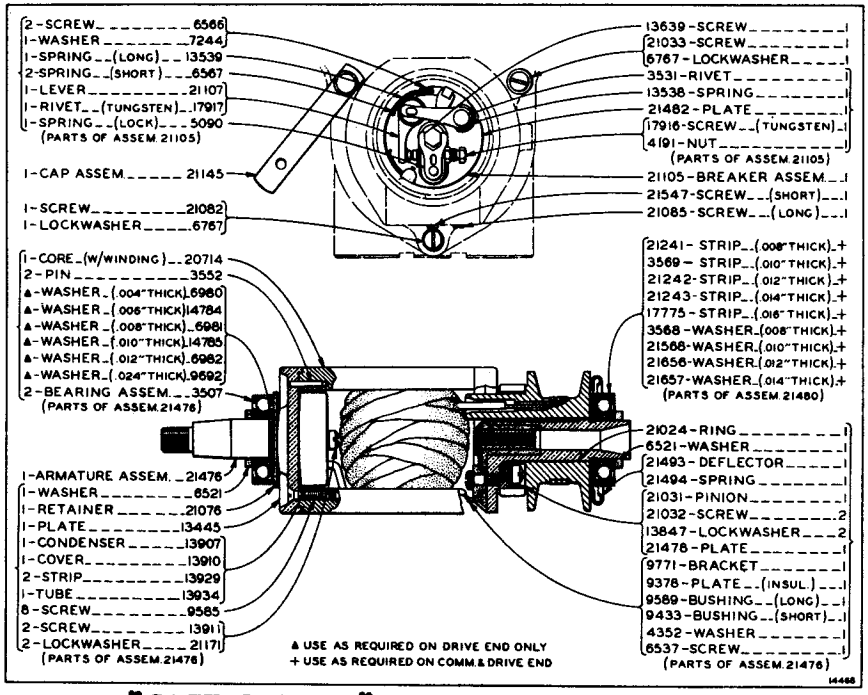


"CATERPILLAR" NO. 5B2955 MAGNETO

(Continued on back of page)

Form 1736 Printed in U.S.A. Issue 1 6-1-40

NUMBERS SHOWN ARE MANUFACTURERS, NOT "CATERPILLAR" PART NUMBERS, EXCEPT WHEN SPECIFIED.

NUMBERS SHOWN ARE MANUFACTURERS, NOT "CATERPILLAR" PART NUMBERS, EXCEPT WHEN SPECIFIED.

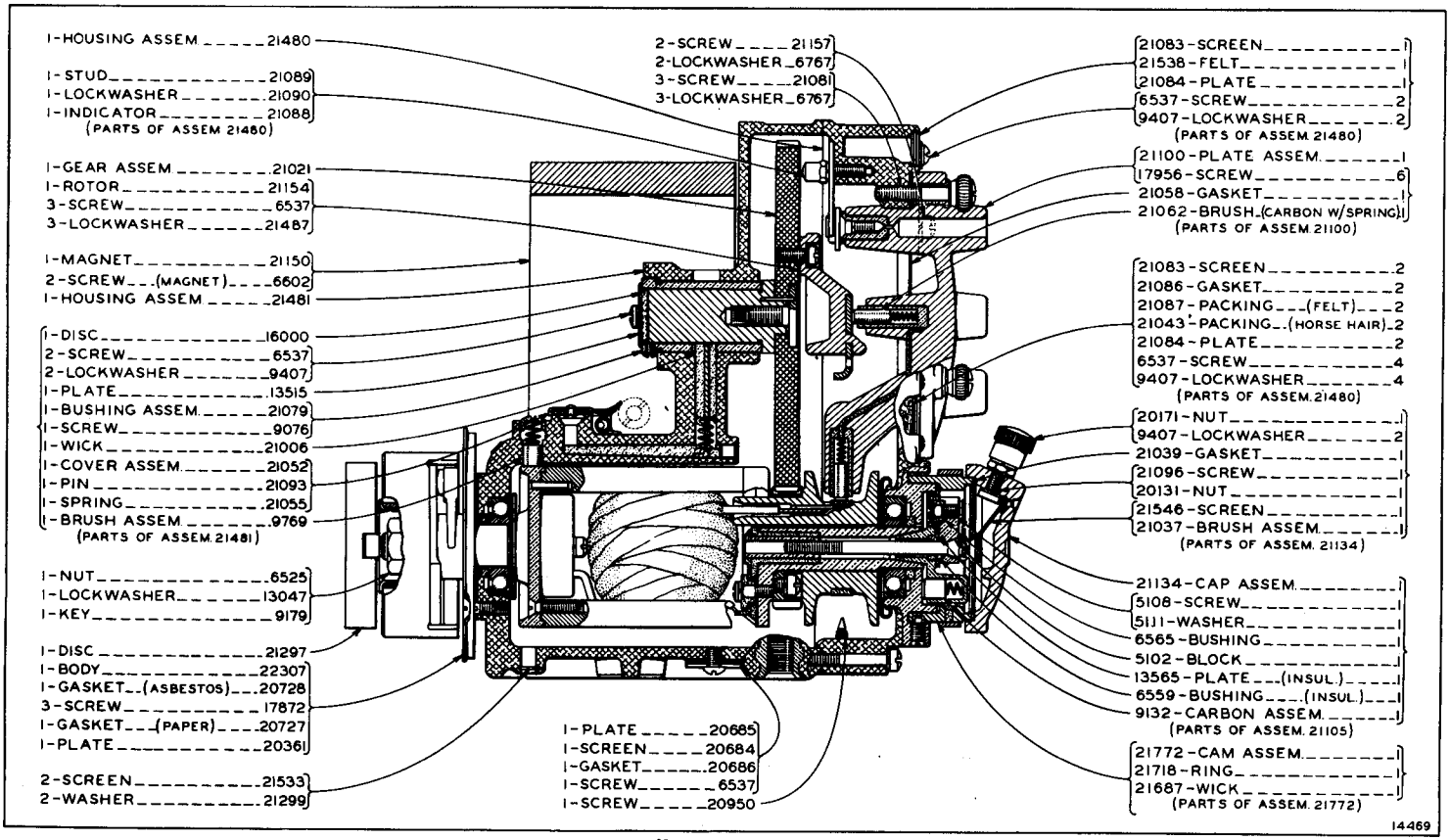


"CATERPILLAR" NO. 5B2955 MAGNETO

# ENSIGN 2″ NATURAL GAS FILTER No. 6736

Manufacturer
ENSIGN CARBURETOR CO., LTD.
7010 S. Alameda St. or 450 East Ohio St.
Huntington Park, Calif. Chicago, Ill.

For Parts Service on this Filter, Order from the Manufacturer or his Representative

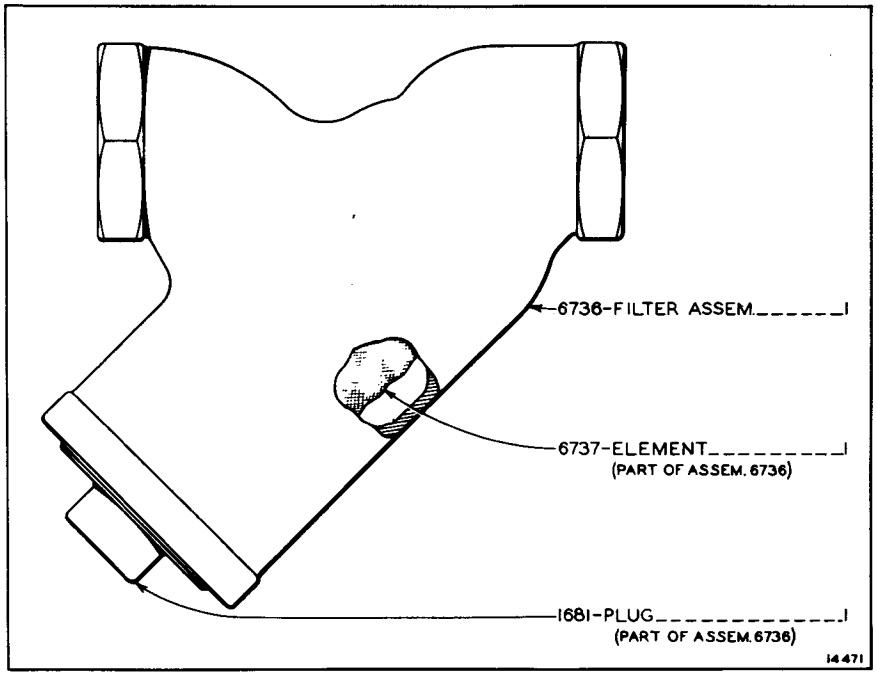


CATERPILLAR NO. 5B7531

NUMBERS SHOWN ARE MANUFACTURERS, NOT "CATERPILLAR" PART NUMBERS, EXCEPT WHEN SPECIFIED.

Form 1736 Printed in U.S.A. Issue 1 3-1-40

# BOSCH GENERATOR ARKF $\frac{130}{6}$ 900 RS 142

Manufacturer
AMERICAN BOSCH CORPORATION
Springfield, Massachusetts

For Parts Service on this Generator, Order from the Manufacturer or his Representative

Form 1736 Printed in U.S.A. Issue 1 11-1-40




"CATERPILLAR" NO. 4B3467

NUMBERS SHOWN ARE MANUFACTURERS, NOT "CATERPILLAR" PART NUMBERS, EXCEPT WHEN SPECIFIED.

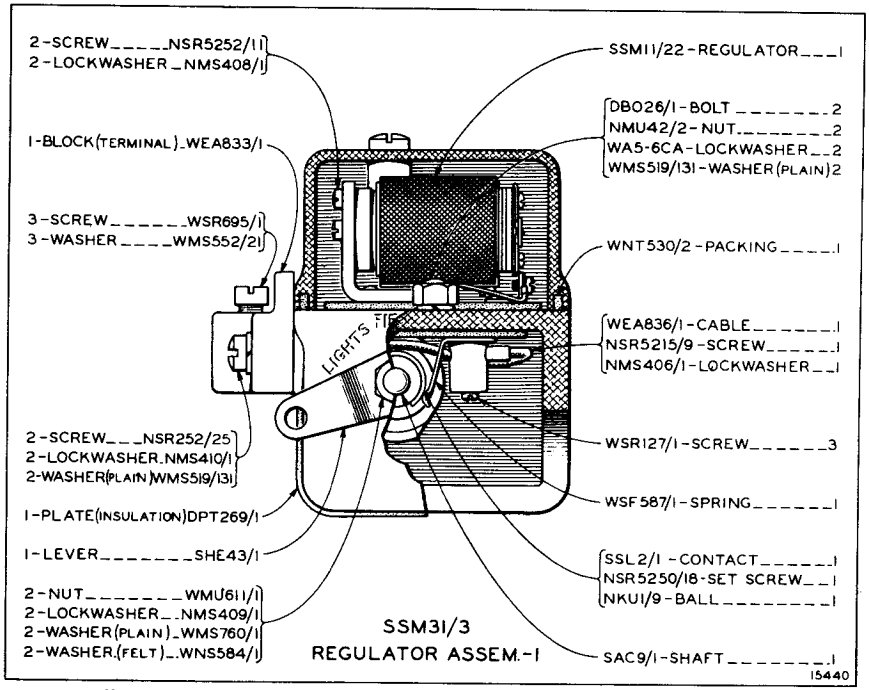


"CATERPILLAR" NO. 4B3467 GENERATOR

# GARDNER-DENVER AUXILIARY WATER PUMP — 1", TYPE C

Manufacturer
GARDNER-DENVER COMPANY
Quincy, Illinois

For Parts Service on this Pump, Order from the Manufacturer or his Representative

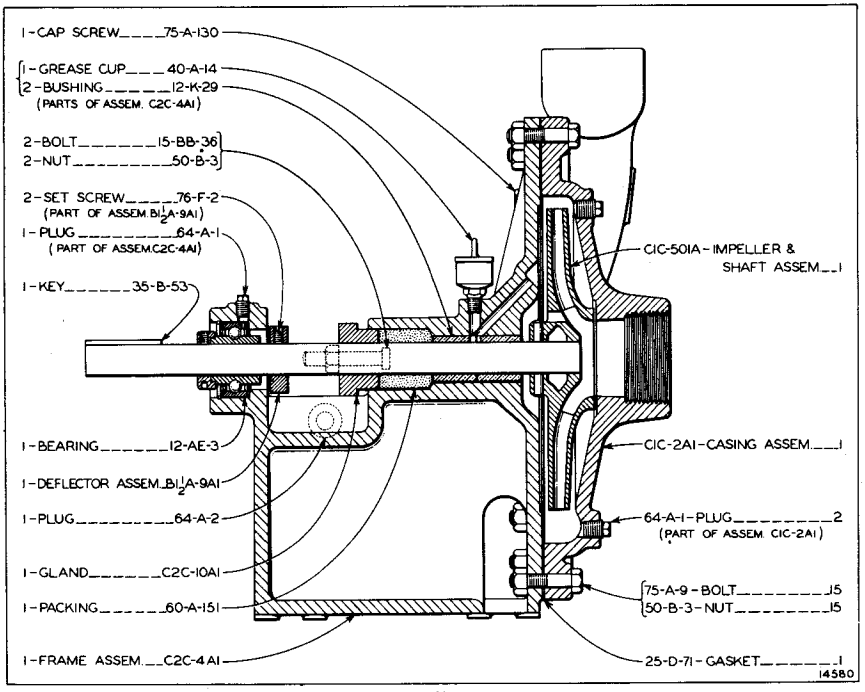


"CATERPILLAR" NO. 6B9970

Form 1736 Printed in U. S. A. Issue 1 10-1-40

NUMBERS SHOWN ARE MANUFACTURERS, NOT "CATERPILLAR" PART NUMBERS, EXCEPT WHEN SPECIFIED.

# DONALDSON AIR CLEANER MODEL A-1025

Manufacturer
DONALDSON COMPANY, Inc.
666 Pelham Street
Saint Paul, Minn.

For Parts Service on this Air Cleaner, Order from the Caterpillar Tractor Co.
Peoria, Ill. or
San Leandro, Cal.

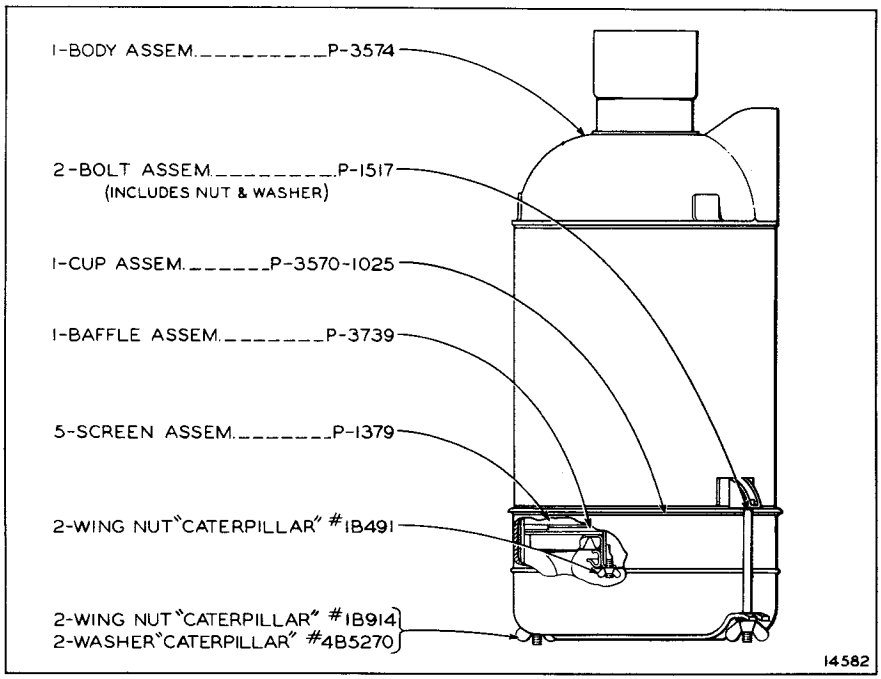


"CATERPILLAR" NO. 6B7877

Form 1736 Printed in U. S. A. Issue 1 5-15-40

NUMBERS SHOWN ARE MANUFACTURERS, NOT "CATERPILLAR" PART NUMBERS, EXCEPT WHEN SPECIFIED.

# DELCO-REMY STARTING MOTOR
# MODEL 1107029

Manufacturer
DELCO-REMY DIVISION
General Motors Corporation
Anderson, Indiana

For Parts Service on this Starting Motor, Order from the United Motors Service Corp. or their Representative

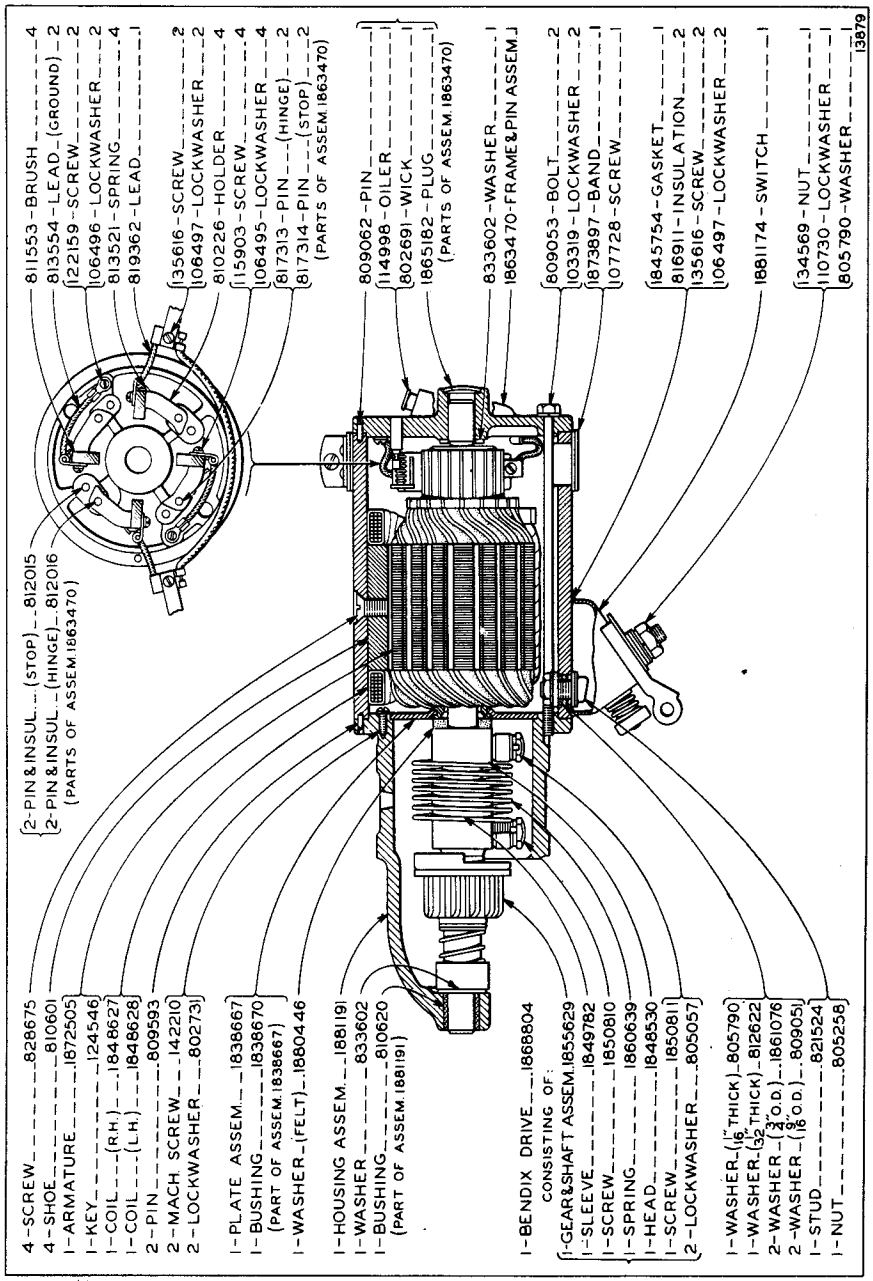


"CATERPILLAR" NO. 6B9157

**NUMBERS SHOWN ARE MANUFACTURERS, NOT "CATERPILLAR" PART NUMBERS, EXCEPT WHEN SPECIFIED.**

Form 1736 Printed in U. S. A. Issue 1 8-15-40

# DELCO-REMY STARTING MOTOR MODEL 1107820

Manufacturer
DELCO-REMY DIVISION
General Motors Corporation
Anderson, Indiana

For Parts Service on this Starter, Order from the United Motors Service Corp. or their Representative

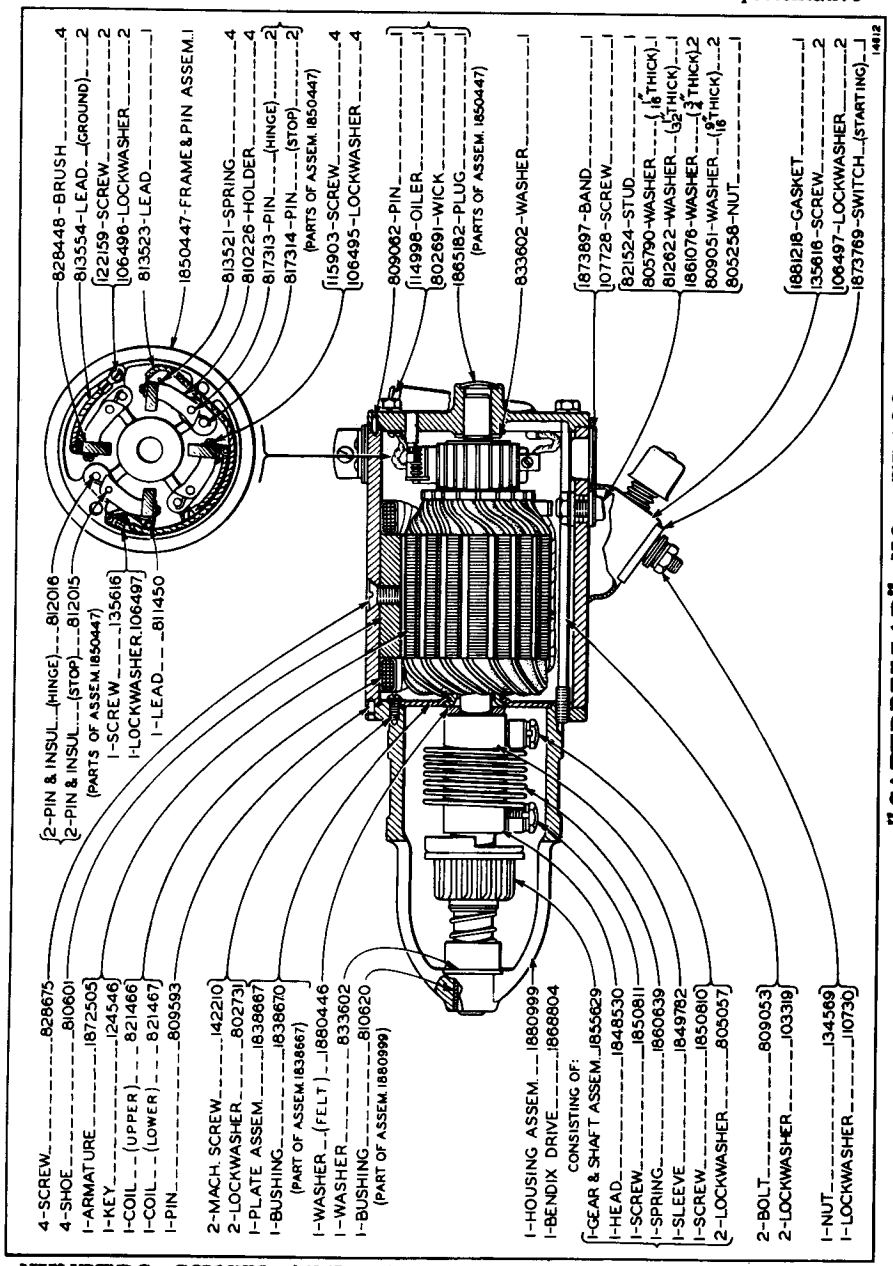


"CATERPILLAR" NO. 7B408

NUMBERS SHOWN ARE MANUFACTURERS, NOT "CATERPILLAR" PART NUMBERS, EXCEPT WHEN SPECIFIED.

Form 1736 Printed in U.S.A. Issue 1 5-1-40

# DELCO-REMY STARTING MOTOR
# MODEL 1107823

Manufacturer
**DELCO-REMY DIVISION**
General Motors Corporation
Anderson, Indiana

For Parts Service on this Starting Motor, Order from the United Motors Service Corp. or their Representative

Form 1736 Printed in U. S. A. Issue 1 10-1-40

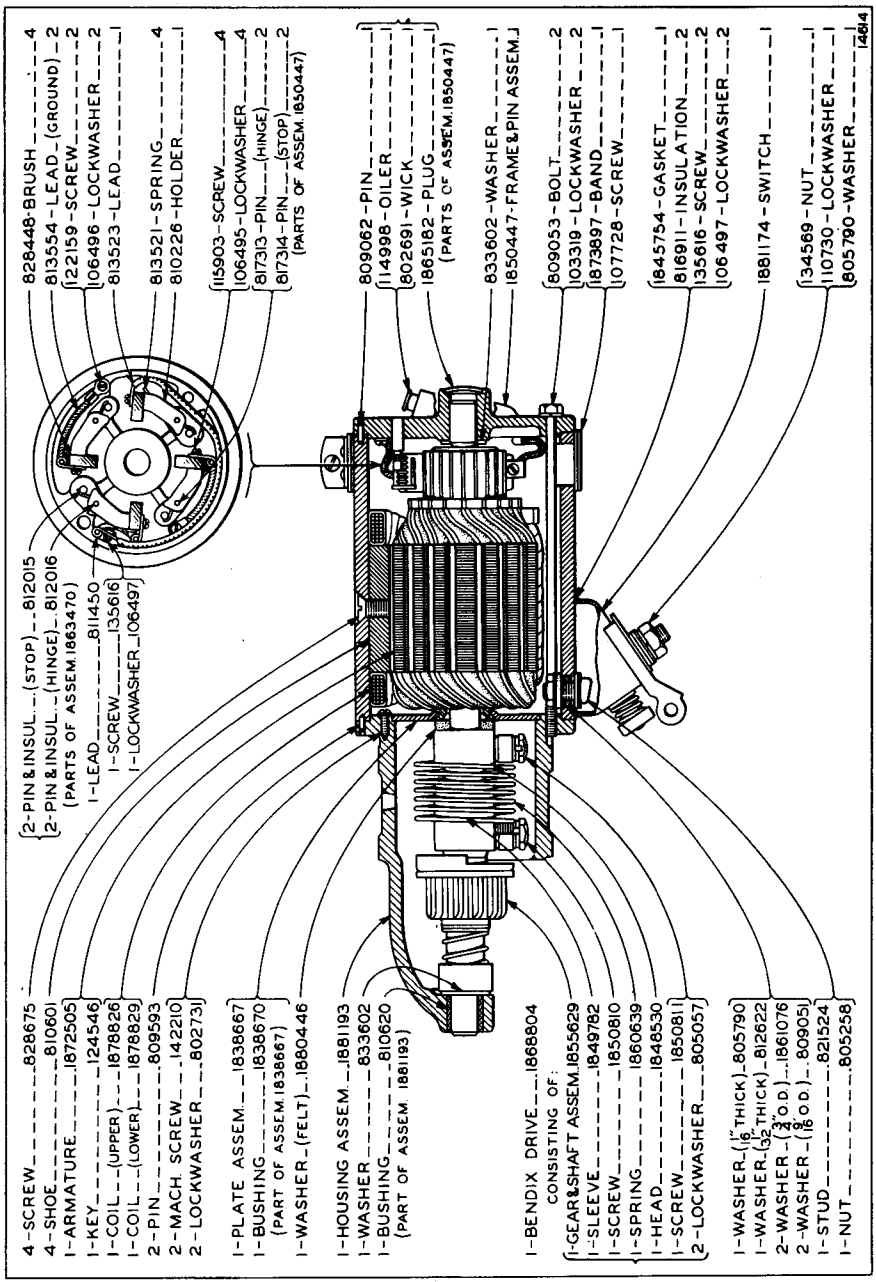


"CATERPILLAR" NO. 7B536

NUMBERS SHOWN ARE MANUFACTURERS, NOT "CATERPILLAR" PART NUMBERS, EXCEPT WHEN SPECIFIED.

# DELCO-REMY GENERATOR MODEL 1101667

Manufacturer
**DELCO-REMY DIVISION**
General Motors Corporation
Anderson, Indiana

For Parts Service on this Generator, Order from the United Motors Service Corp. or their Representative

Form 1738 Printed in U. S. A. Issue 1 10-1-40

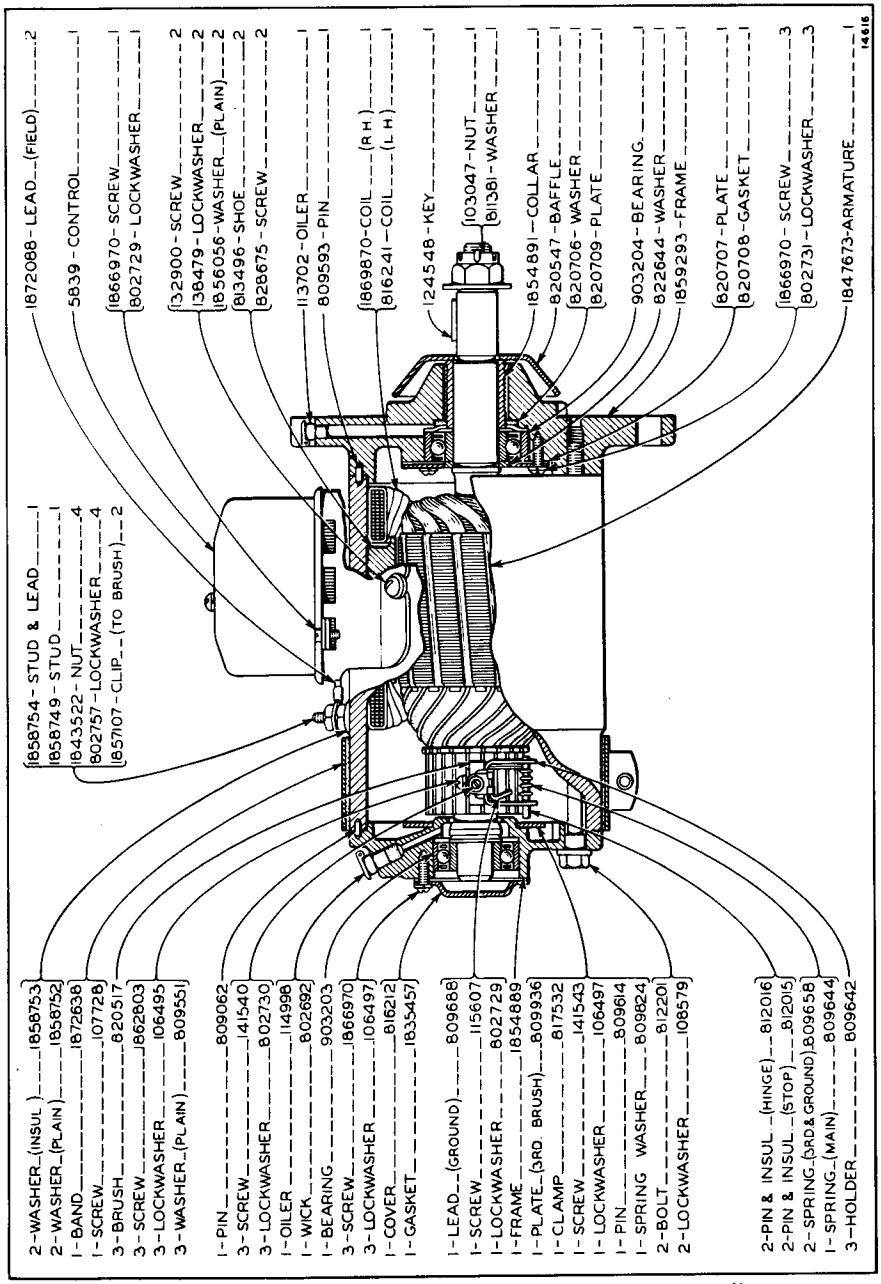


"CATERPILLAR" NO. 6E2231

NUMBERS SHOWN ARE MANUFACTURERS, NOT "CATERPILLAR" PART NUMBERS, EXCEPT WHEN SPECIFIED.

# DELCO-REMY GENERATOR MODEL 1102505

Manufacturer
DELCO-REMY DIVISION
General Motors Corporation
Anderson, Indiana

For Parts Service on this Generator, Order from the United Motors Service Corp. or their Representative

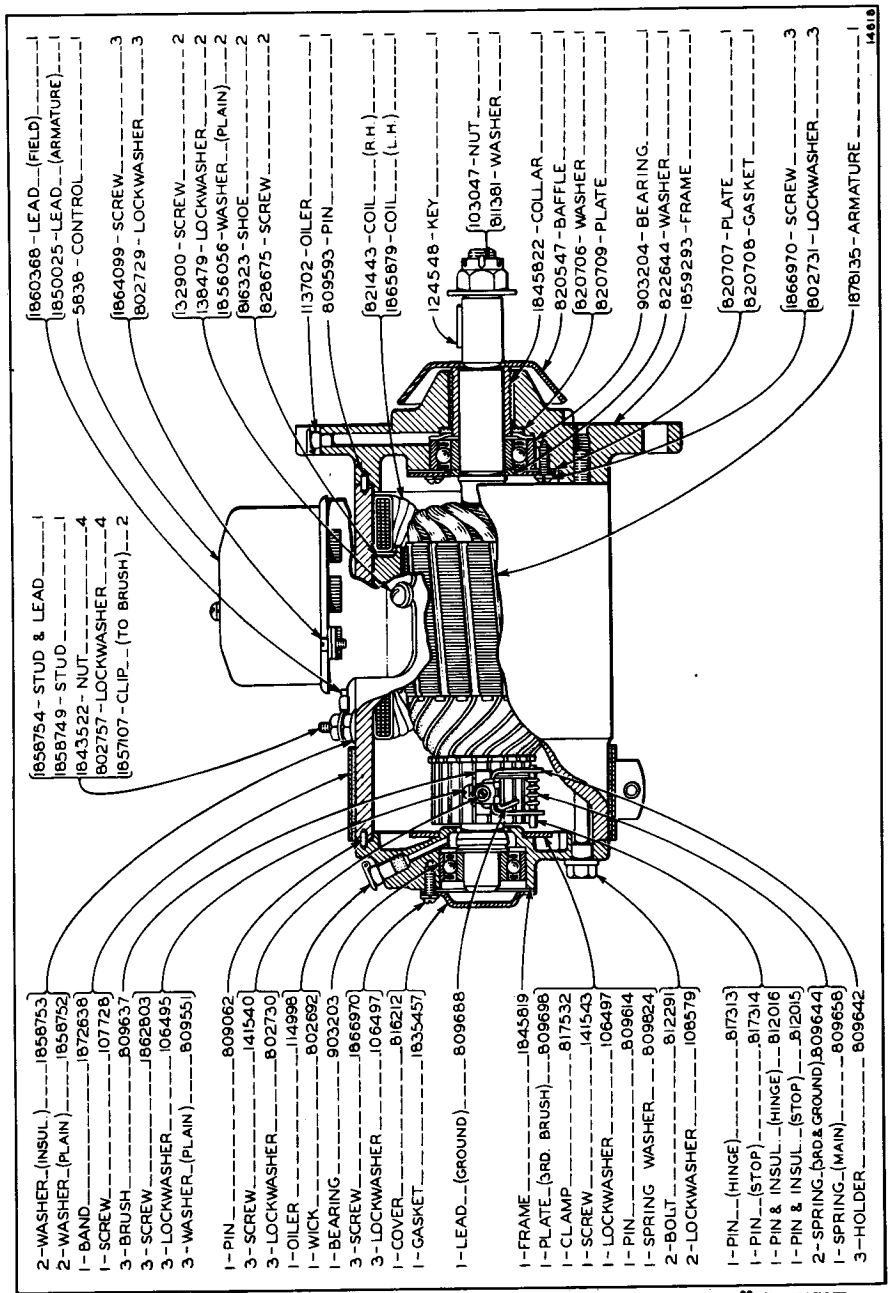


"CATERPILLAR" NO. 6B1616

NUMBERS SHOWN ARE MANUFACTURERS, NOT "CATERPILLAR" PART NUMBERS, EXCEPT WHEN SPECIFIED.

Form 1736 Printed in U. S. A. Issue 1 8-15-40

# LEECE-NEVILLE REGULATOR TYPE 1912-R & 2065-R

Manufacturer
LEECE-NEVILLE COMPANY
5363 Hamilton Avenue N. E.
Cleveland, Ohio

For Parts Service on this Regulator, Order from the Manufacturer or his Representative




"CATERPILLAR" NO. 6B1140 (1912-R—10 Ampere)
"CATERPILLAR" NO. 7B7331 (2065-R—10 Ampere)

NUMBERS SHOWN ARE MANUFACTURERS, NOT "CATERPILLAR" PART NUMBERS, EXCEPT WHEN SPECIFIED.

Remove Issue 1 and insert this in its place.

Form 1736 Printed in U.S.A. Issue 2 11-1-40

# ZENITH NATURAL GAS PRESSURE REGULATOR MODEL A185-5

Manufacturer
ZENITH CARBURETOR DIVISION
Bendix Aviation Corporation
696 Hart Avenue
Detroit, Michigan

For Parts Service on this Regulator, Order from the Manufacturer or his Representative

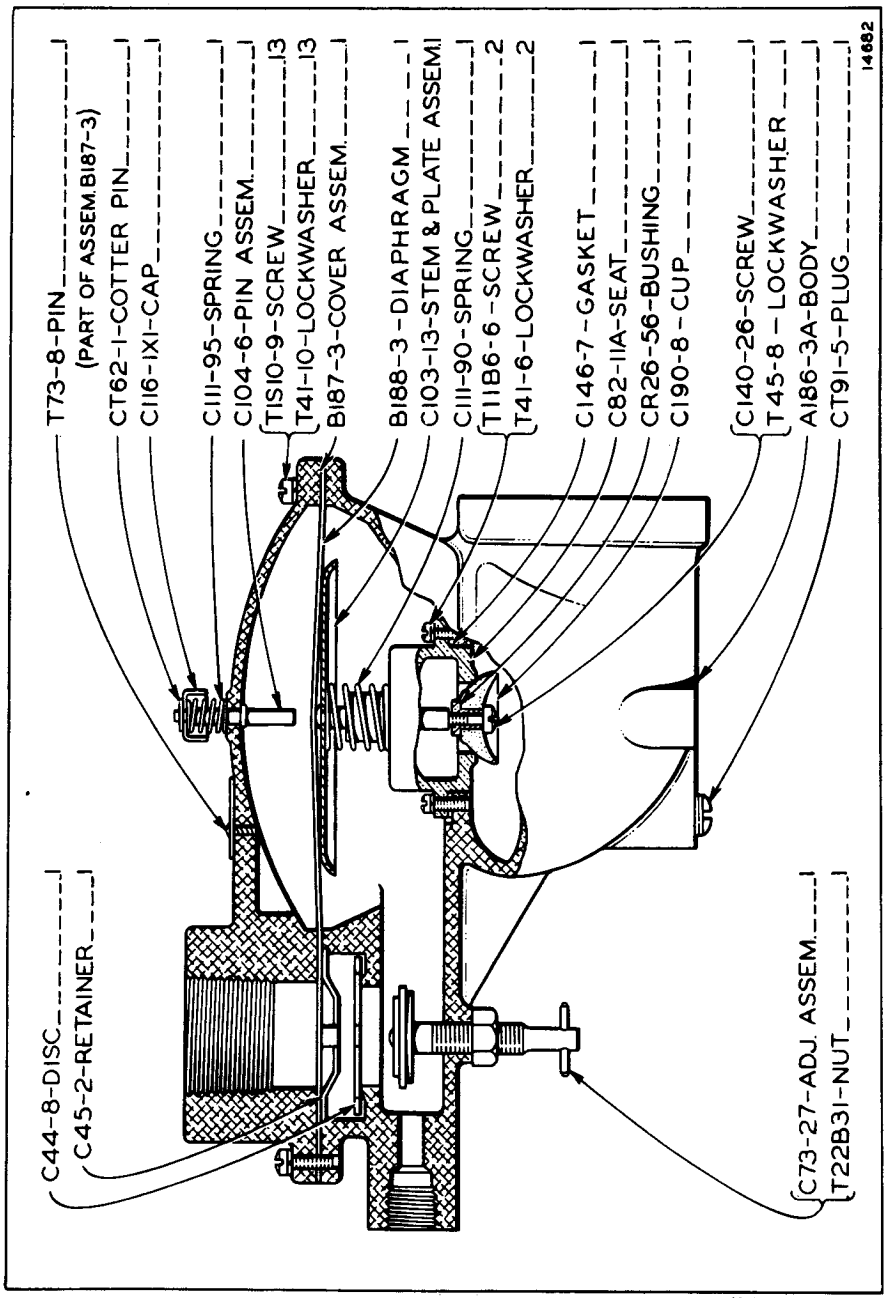


"CATERPILLAR" NO. 5B1958

NUMBERS SHOWN ARE MANUFACTURERS, NOT "CATERPILLAR" PART NUMBERS, EXCEPT WHEN SPECIFIED.

Form 1736 Printed in U. S. A. Issue 1 7-1-40

# ZENITH CARBURETOR - MODEL GS16-No. 8919

Manufacturer
ZENITH CARBURETOR DIVISION
Bendix Aviation Corporation
696 Hart Avenue
Detroit, Michigan

For Parts Service on this Carburetor, Order from the Manufacturer or his Representative

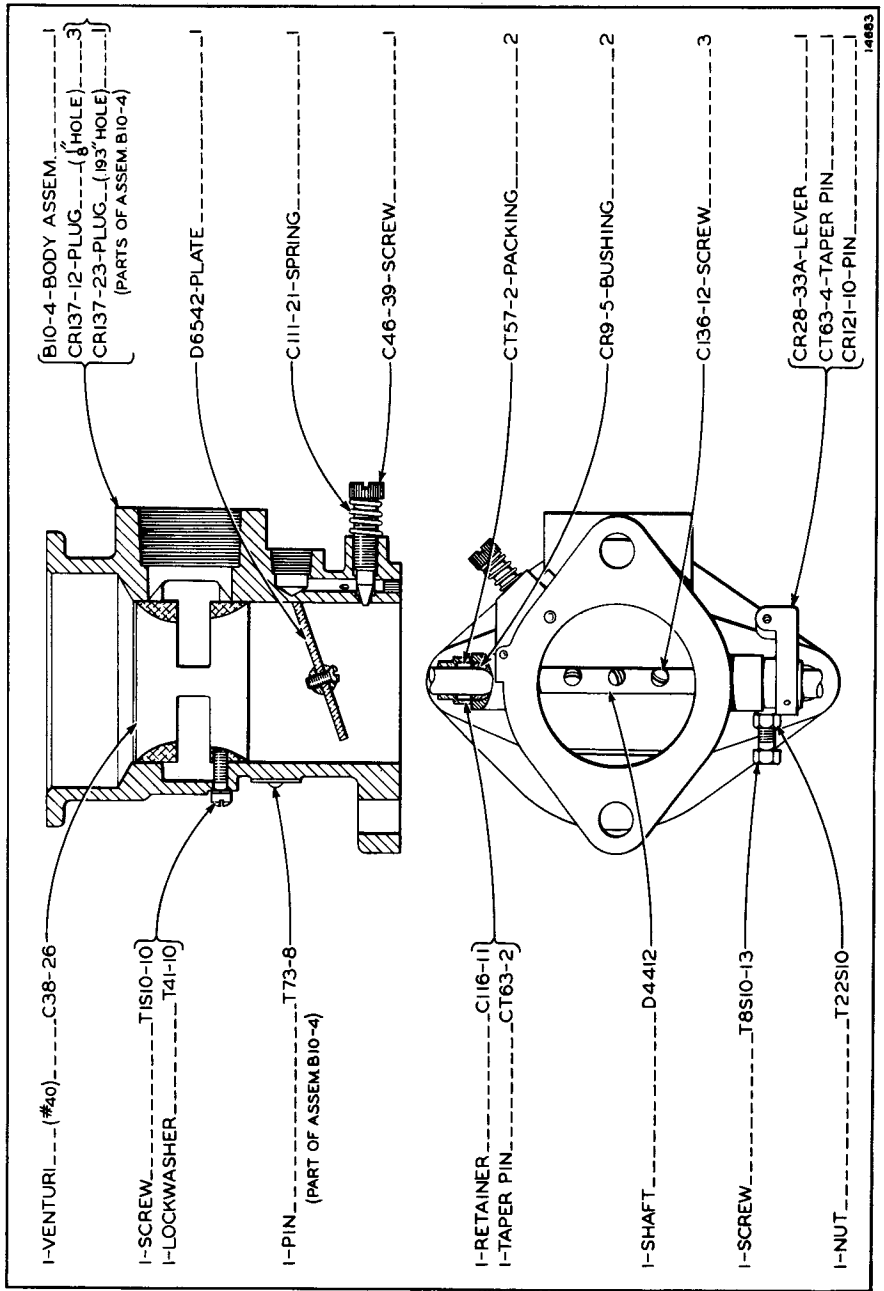


"CATERPILLAR" NO. 5B1957

NUMBERS SHOWN ARE MANUFACTURERS, NOT "CATERPILLAR" PART NUMBERS, EXCEPT WHEN SPECIFIED.

Form 1736 Printed in U. S. A. Issue 1 7-1-40

# ZENITH CARBURETOR - MODEL TU4C-No. 8431D

Manufacturer
ZENITH CARBURETOR DIVISION
Bendix Aviation Corporation
696 Hart Avenue
Detroit, Michigan

For Parts Service on this Carburetor, Order from the Manufacturer or his Representative

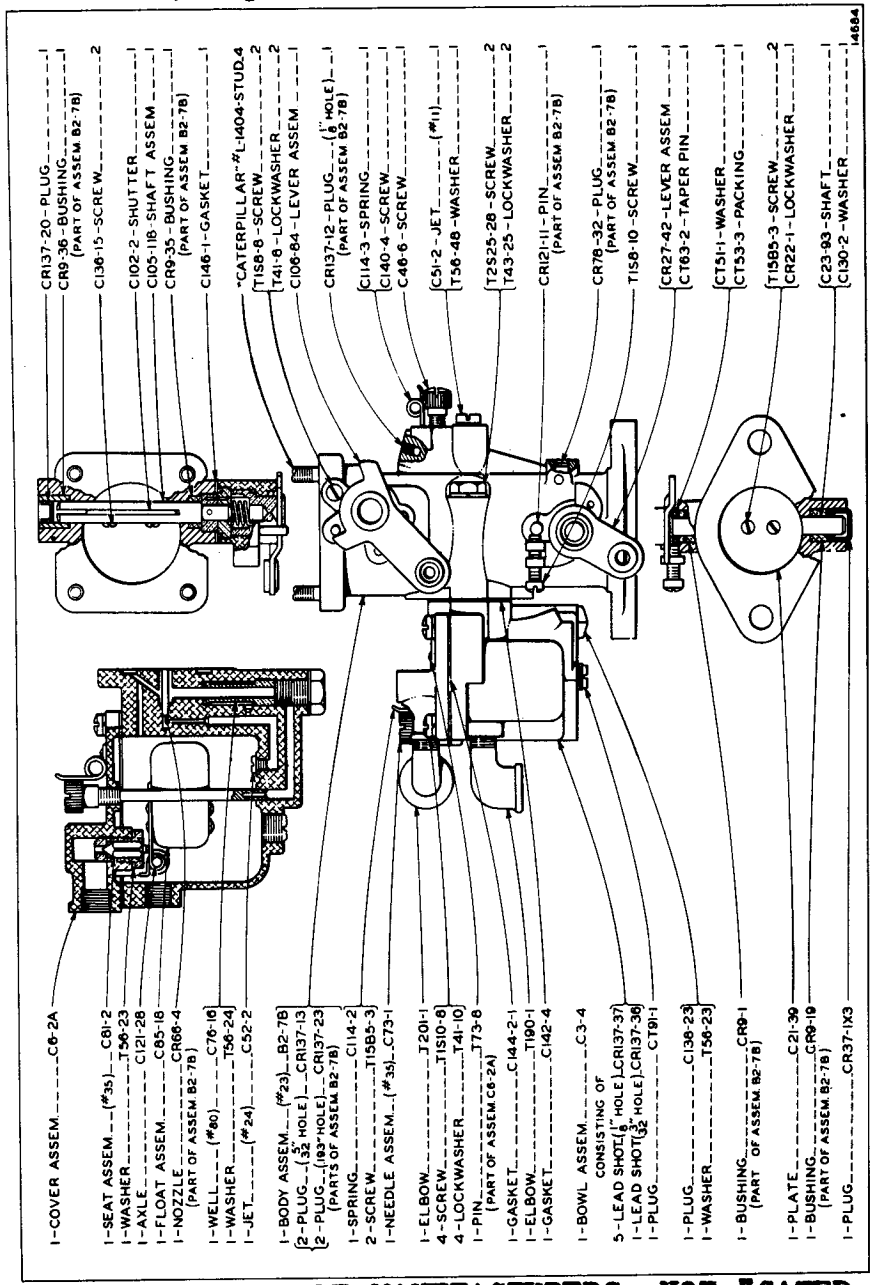


"CATERPILLAR" NO. 7B3397

NUMBERS SHOWN ARE MANUFACTURERS, NOT "CATERPILLAR" PART NUMBERS, EXCEPT WHEN SPECIFIED.

Form 1736 Printed in U. S. A. Issue 1 7-1-40

# ZENITH CARBURETOR - MODEL TU4C-No. 7843D

**Manufacturer**
**ZENITH CARBURETOR DIVISION**
**Bendix Aviation Corporation**
**696 Hart Avenue**
**Detroit, Michigan**

**For Parts Service on this Carburetor, Order from the Manufacturer or his Representative**

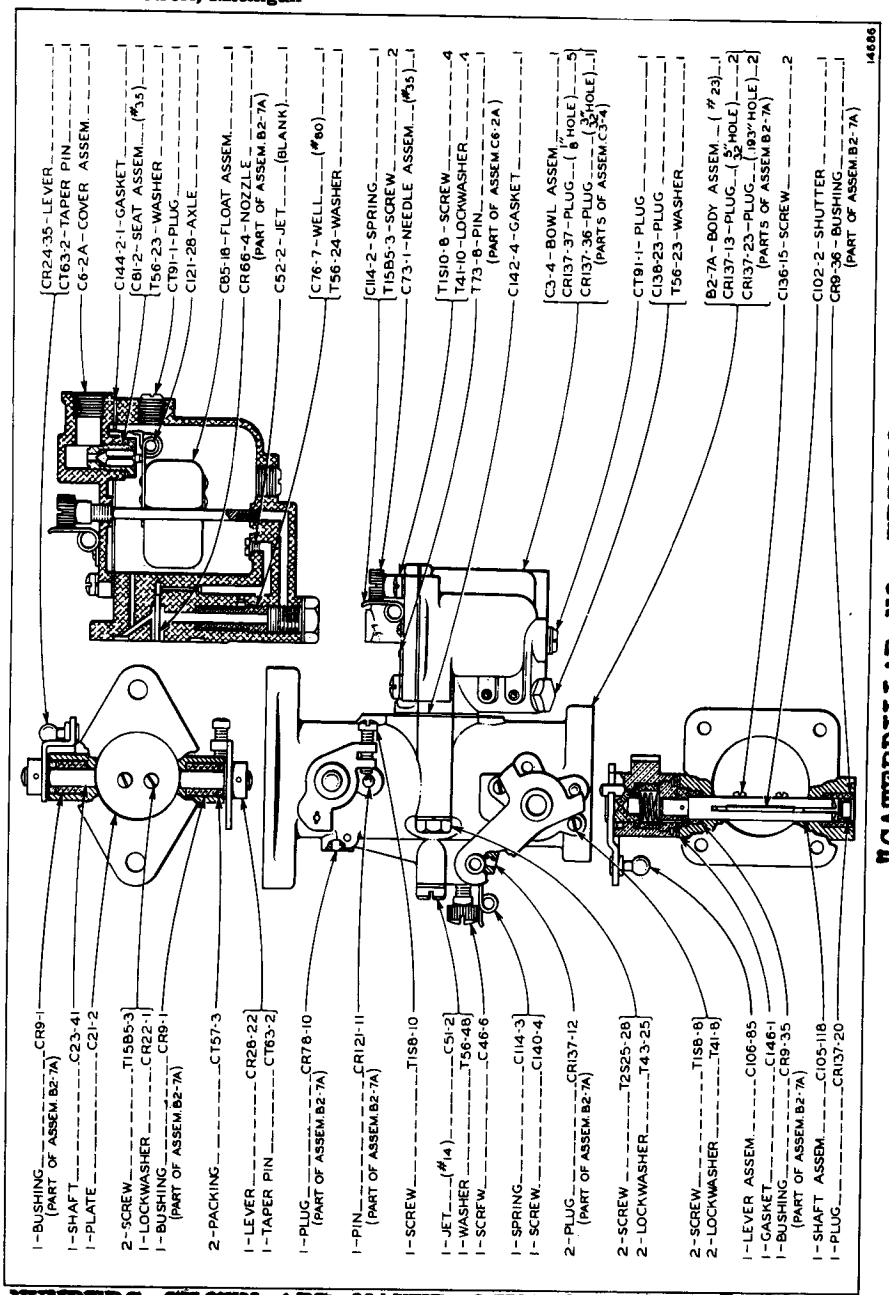


"CATERPILLAR NO. 7B3302

**NUMBERS SHOWN ARE MANUFACTURERS, NOT "CATERPILLAR" PART NUMBERS, EXCEPT WHEN SPECIFIED.**

Form 1736 Printed in U. S. A. Issue 1 7-1-40

# ZENITH CARBURETOR - MODEL 22AX8-No. 7580G

Manufacturer
ZENITH CARBURETOR DIVISION
BENDIX AVIATION CORPORATION
696 Hart Avenue
Detroit, Michigan

**For Parts Service on this Carburetor, Order from the Manufacturer or his Representative**

Form 1736 Printed in U. S. A. Issue 1 4-1-40

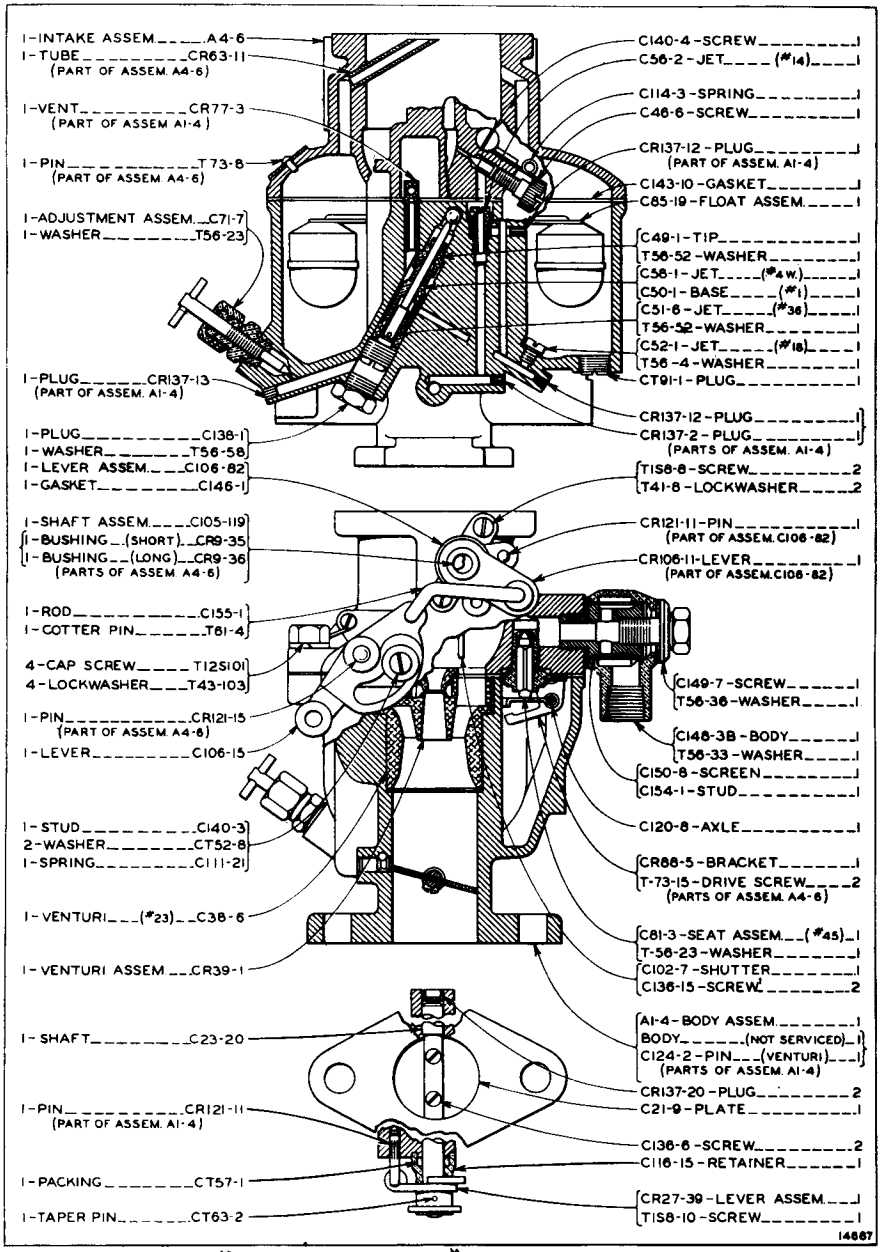


"CATERPILLAR" NO. 7B3076

NUMBERS SHOWN ARE MANUFACTURERS, NOT "CATERPILLAR" PART NUMBERS, EXCEPT WHEN SPECIFIED.

# ZENITH CARBURETOR - MODEL 22AX8-No. 7782G

Manufacturer
ZENITH CARBURETOR DIVISION
BENDIX AVIATION CORPORATION
696 Hart Avenue
Detroit, Michigan

For Parts Service on this Carburetor, Order from the Manufacturer or his Representative

Form 1736 Printed in U.S.A. Issue 1 5-1-40

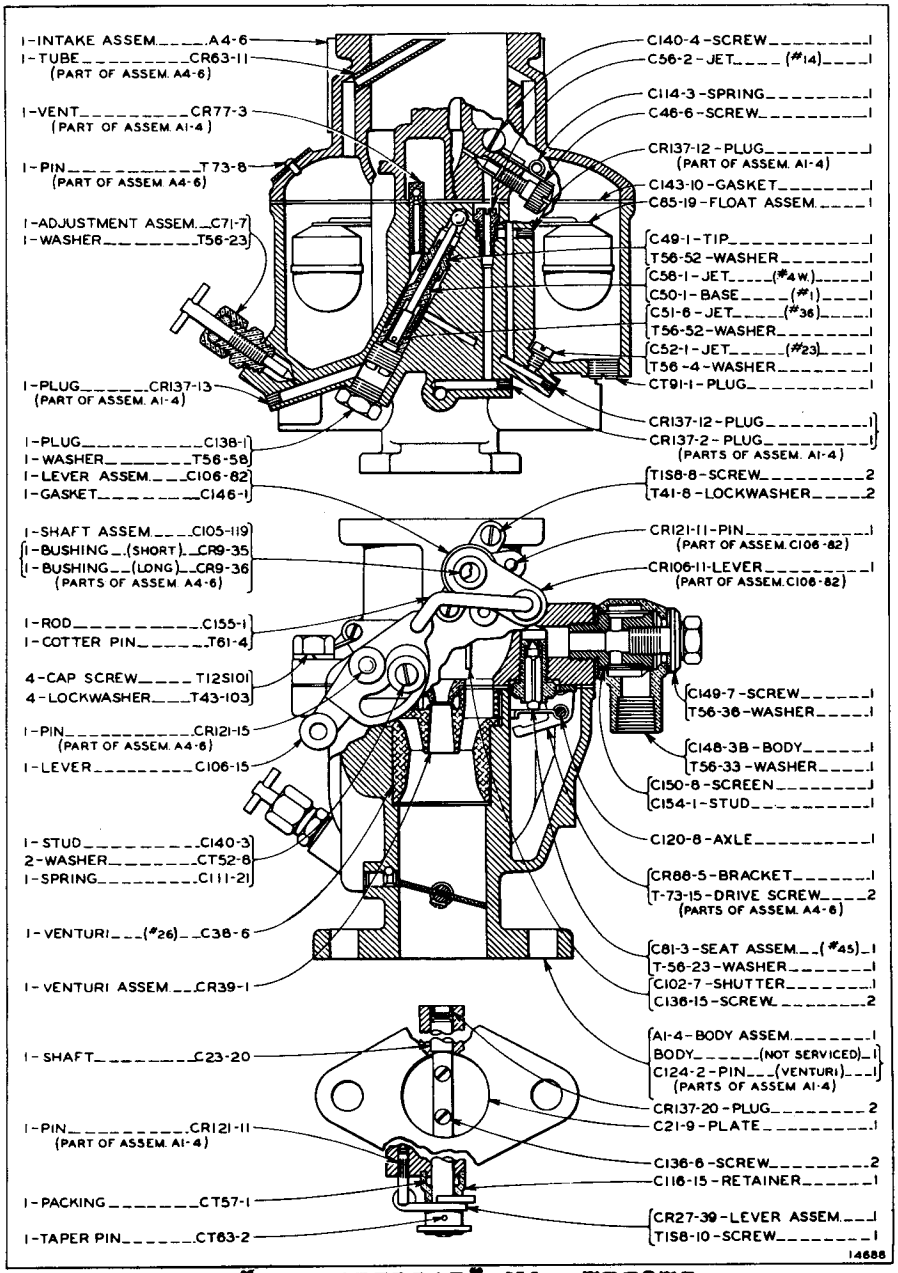


"CATERPILLAR" NO. 7B3275

NUMBERS SHOWN ARE MANUFACTURERS, NOT "CATERPILLAR" PART NUMBERS, EXCEPT WHEN SPECIFIED.

# ZENITH CARBURETOR - MODEL 22AX8-No. 8408F

Manufacturer
ZENITH CARBURETOR DIVISION
BENDIX AVIATION CORPORATION
696 Hart Avenue
Detroit, Michigan

For Parts Service on this Carburetor, Order from the Manufacturer or his Representative

Form 1736 Printed in U.S.A. Issue 1 5-1-40

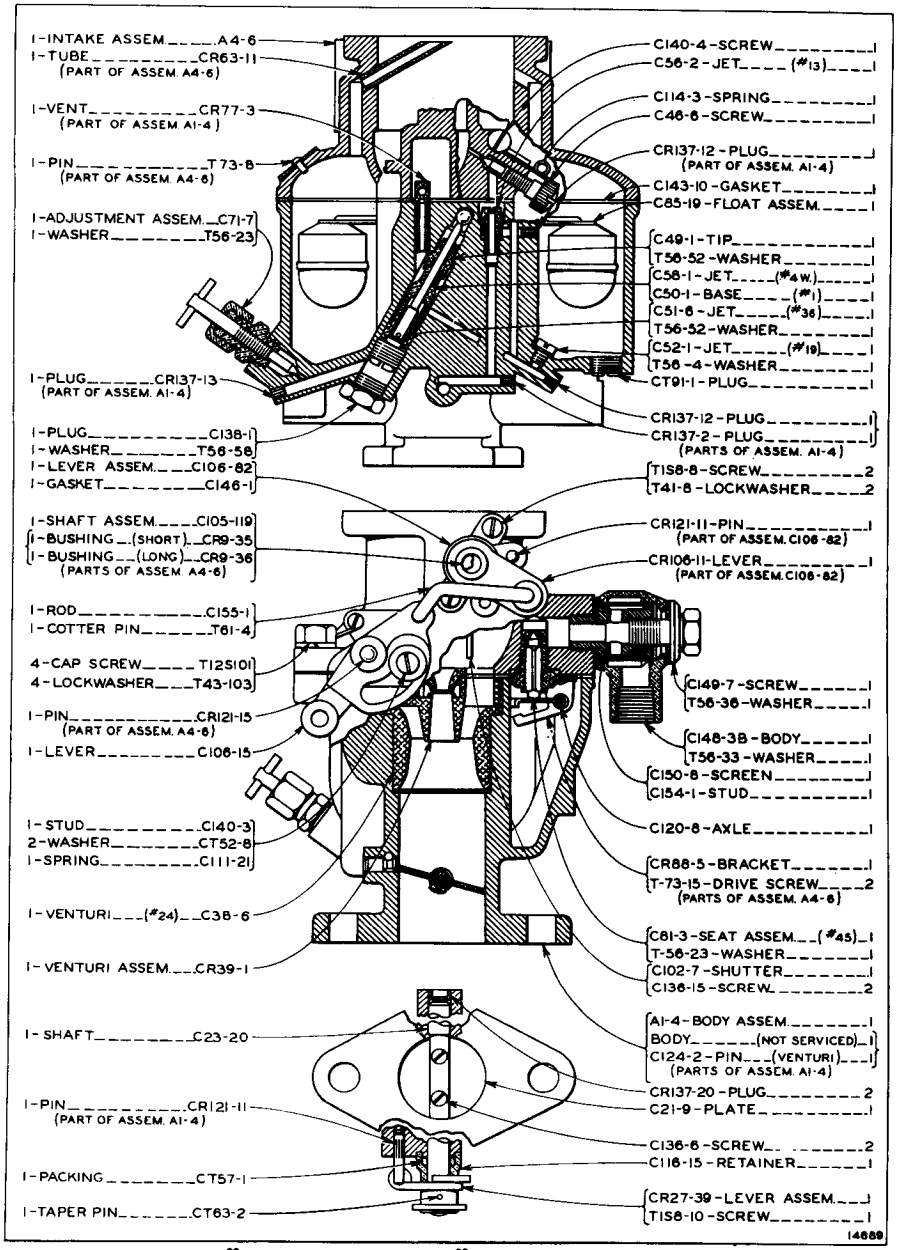


"CATERPILLAR" NO. 7B3160
NUMBERS SHOWN ARE MANUFACTURERS, NOT "CATERPILLAR" PART NUMBERS, EXCEPT WHEN SPECIFIED.

# LEECE-NEVILLE STARTING MOTOR TYPE 1223M

Manufacturer
LEECE-NEVILLE COMPANY
5363 Hamilton Avenue N. E.
Cleveland, Ohio

For Parts Service on this Starting Motor, Order from the Manufacturer or his Representative

Form 1736 Printed in U. S. A. Issue 1 7-1-40




"CATERPILLAR" NO. 5B3192 STARTING MOTOR

NUMBERS SHOWN ARE MANUFACTURERS, NOT "CATERPILLAR" PART NUMBERS, EXCEPT WHEN SPECIFIED.

# MIDLAND AIR COMPRESSOR MODEL 7A-B, SPECIFICATION N-420-A

Manufacturer
Midland Steel Products Co.
Madison Ave. and West 106th St.
Cleveland, Ohio

For Parts Service on this Compressor, Order from the Manufacturer or his Representative

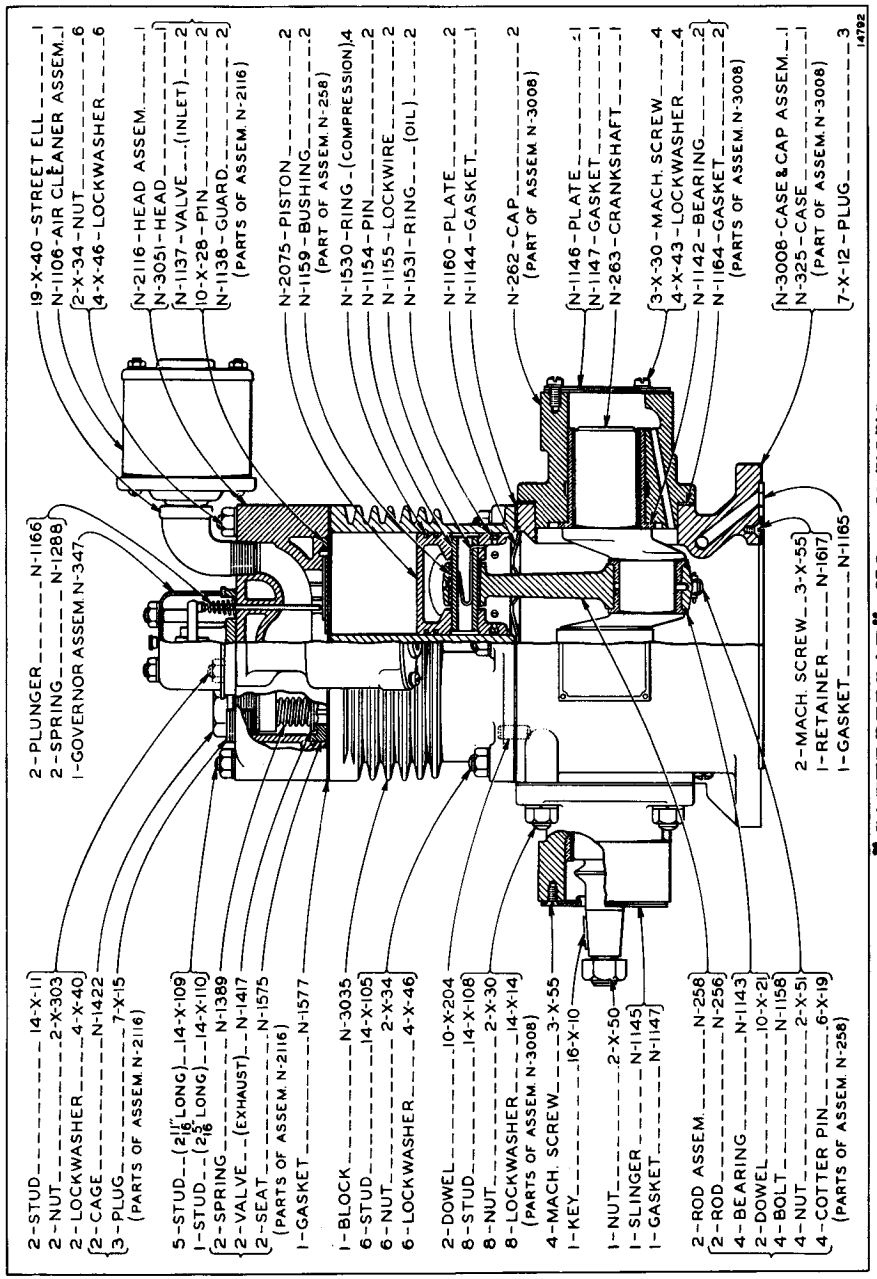


"CATERPILLAR" NO. 6B7872

NOTE: N-347 GOVERNOR ASSEMBLY PARTS ARE SHOWN ON BACK OF PAGE.

NUMBERS SHOWN ARE MANUFACTURERS, NOT "CATERPILLAR" PART NUMBERS, EXCEPT WHEN SPECIFIED.

Form 1738 Printed in U. S. A. Issue 1 5-15-40

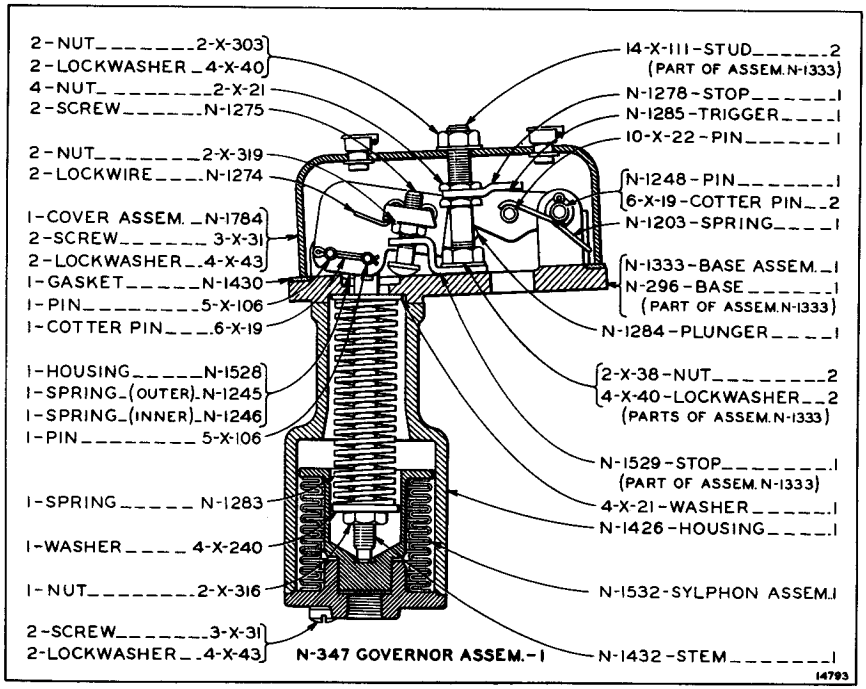


N-347 GOVERNOR ASSEMBLY

NUMBERS SHOWN ARE MANUFACTURERS, NOT "CATERPILLAR" PART NUMBERS, EXCEPT WHEN SPECIFIED.

# MIDLAND AIR COMPRESSOR MODEL 7A-B, SPECIFICATION N-420-C

**Manufacturer**
**Midland Steel Products Co.**
**Madison Ave. and West 106th St.**
**Cleveland, Ohio**

**For Parts Service on this Compressor, Order from the Manufacturer or his Representative**

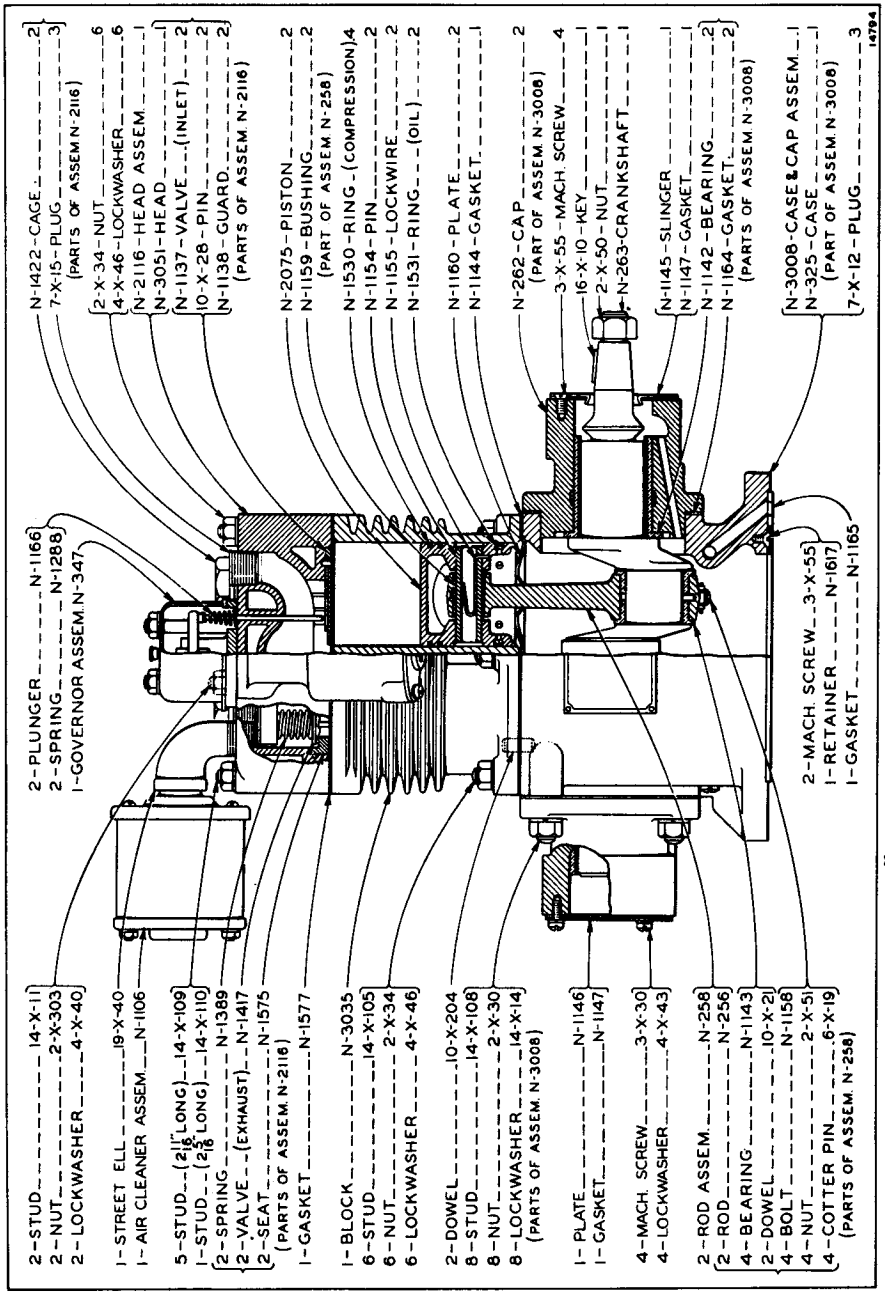


**"CATERPILLAR" NO. 7B2496**

**NOTE: N-347 Governor Assembly parts are shown on Page 370.**

**NUMBERS SHOWN ARE MANUFACTURERS, NOT "CATERPILLAR" PART NUMBERS, EXCEPT WHEN SPECIFIED.**

Form 1736 Printed in U. S. A. Issue 1 6-15-40

# BENDIX-WESTINGHOUSE AIR COMPRESSOR No. 220376

Form 1736 Printed in U. S. A. Issue 1 8-15-40

Manufacturer
BENDIX-WESTINGHOUSE
AUTOMOTIVE AIR BRAKE COMPANY
5001 Centre Avenue
Pittsburg, Penna.

For Parts Service on this Compressor, Order from the Manufacturer or his Representative




"CATERPILLAR" NO. 6B5372

NOTE: 217776 Head Assem. parts are shown on back of page.

NUMBERS SHOWN ARE MANUFACTURERS, NOT "CATERPILLAR" PART NUMBERS, EXCEPT WHEN SPECIFIED.

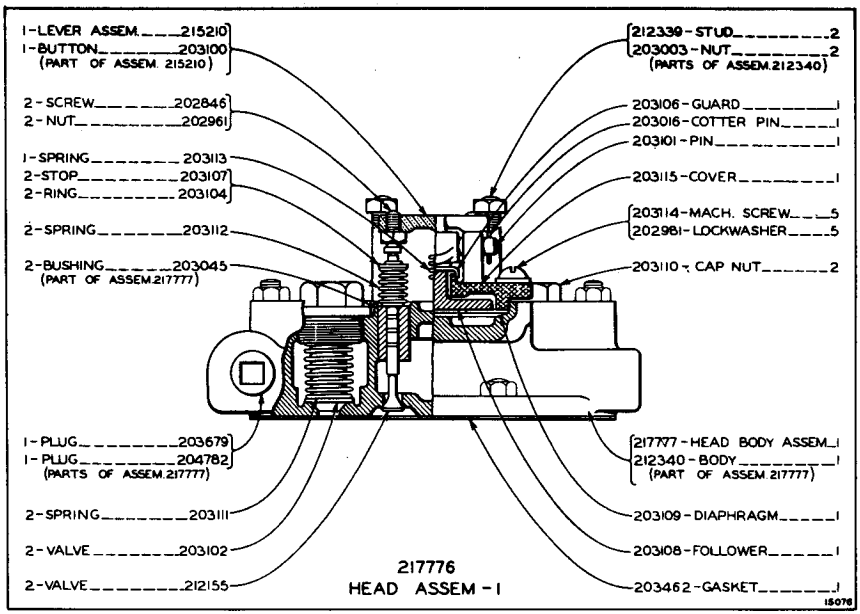


217776 Head Assembly

NUMBERS SHOWN ARE MANUFACTURERS, NOT "CATERPILLAR" PART NUMBERS, EXCEPT WHEN SPECIFIED.

# BENDIX-WESTINGHOUSE AIR COMPRESSOR No. 217676

Form 1736 Printed in U.S.A. Issue 1 11-1-40

Manufacturer
BENDIX-WESTINGHOUSE
AUTOMOTIVE AIR BRAKE COMPANY
5001 Centre Avenue
Pittsburg, Penna.

For Parts Service on this Compressor, Order from the Manufacturer or his Representative




"CATERPILLAR" NO. 7B3196

Note: 217776 Head Assembly parts are shown on back of page

NUMBERS SHOWN ARE MANUFACTURERS', NOT "CATERPILLAR" PART NUMBERS, EXCEPT WHEN SPECIFIED.

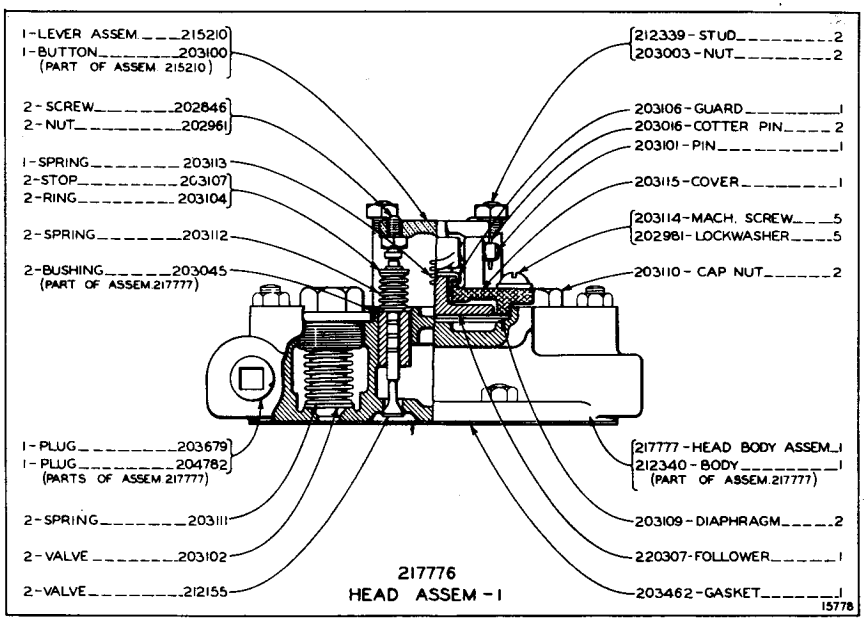
1-LEVER ASSEM. 215210
1-BUTTON 203100
(PART OF ASSEM 215210)
2-SCREW 202846
2-NUT 202961
1-SPRING 203113
2-STOP 203107
2-RING 203104
2-SPRING 203112
2-BUSHING 203045
(PART OF ASSEM.217777)
1-PLUG 203679
1-PLUG 204782
(PARTS OF ASSEM 217777)
2-SPRING 203111
2-VALVE 203102
2-VALVE 212155
212339-STUD 2
203003-NUT 2
203106-GUARD 1
203016-COTTER PIN 2
203101-PIN 1
203115-COVER 1
203114-MACH. SCREW 5
202981-LOCKWASHER 5
203110-CAP NUT 2
217777-HEAD BODY ASSEM. 1
212340-BODY 1
(PART OF ASSEM.217777)
203109-DIAPHRAGM 2
220307-FOLLOWER 1
203462-GASKET 1
217776
HEAD ASSEM-1
15778

# LEECE-NEVILLE GENERATOR TYPE 2044-G

**Manufacturer**
**LEECE-NEVILLE Company**
**5363 Hamilton Avenue N.E.**
**Cleveland, Ohio**

**For Parts Service on this Generator, Order from the Manufacturer or his Representative**

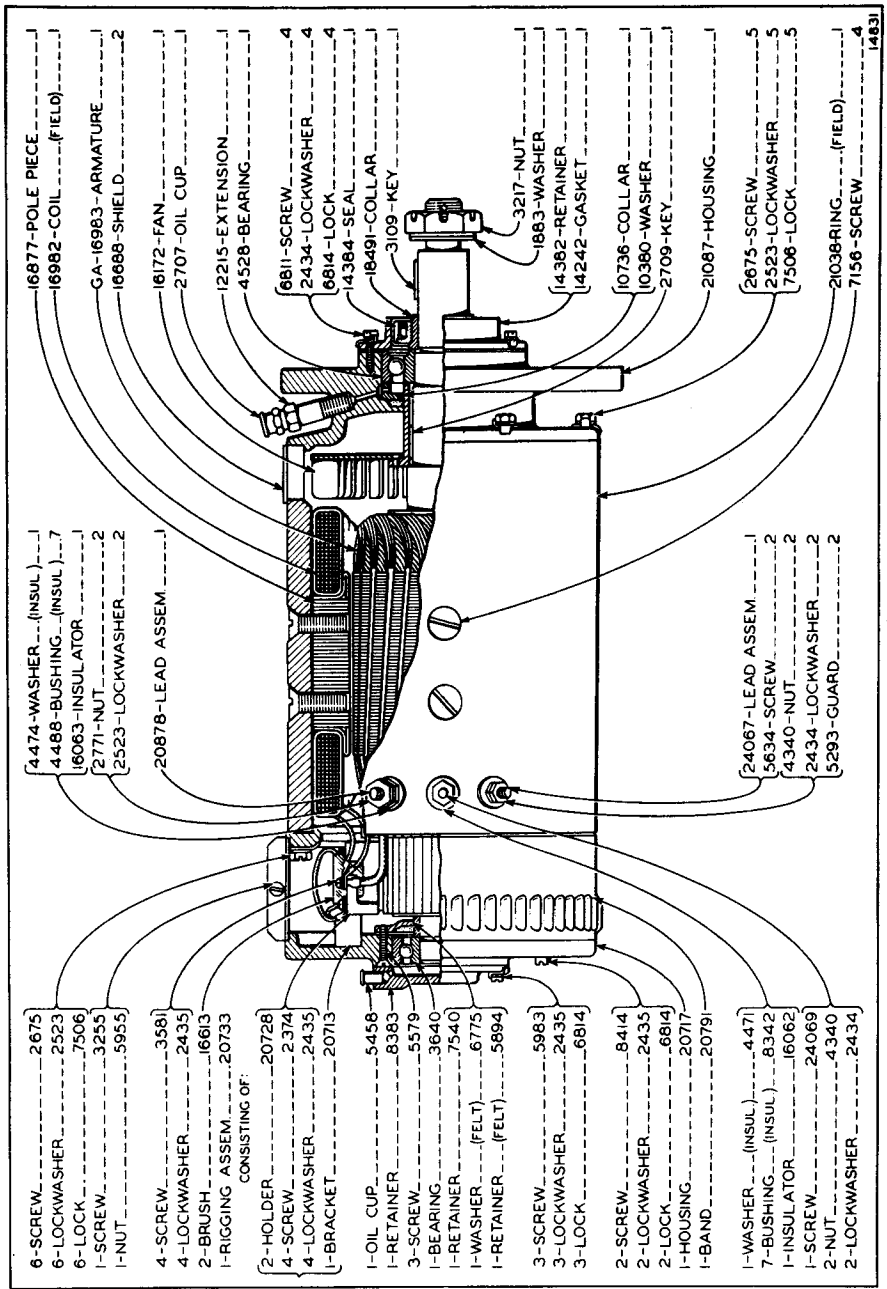


"CATERPILLAR" NO. 7B1481

NUMBERS SHOWN ARE MANUFACTURERS, NOT "CATERPILLAR" PART NUMBERS, EXCEPT WHEN SPECIFIED.

Form 1736 Printed in U.S.A. Issue 1 6-15-40

# ZENITH CARBURETOR - MODEL GS16-No. 9161

**Manufacturer**
**ZENITH CARBURETOR DIVISION**
**Bendix Aviation Corporation**
**696 Hart Avenue**
**Detroit, Michigan**

**For Parts Service on this Carburetor, Order from the Manufacturer or his Representative**

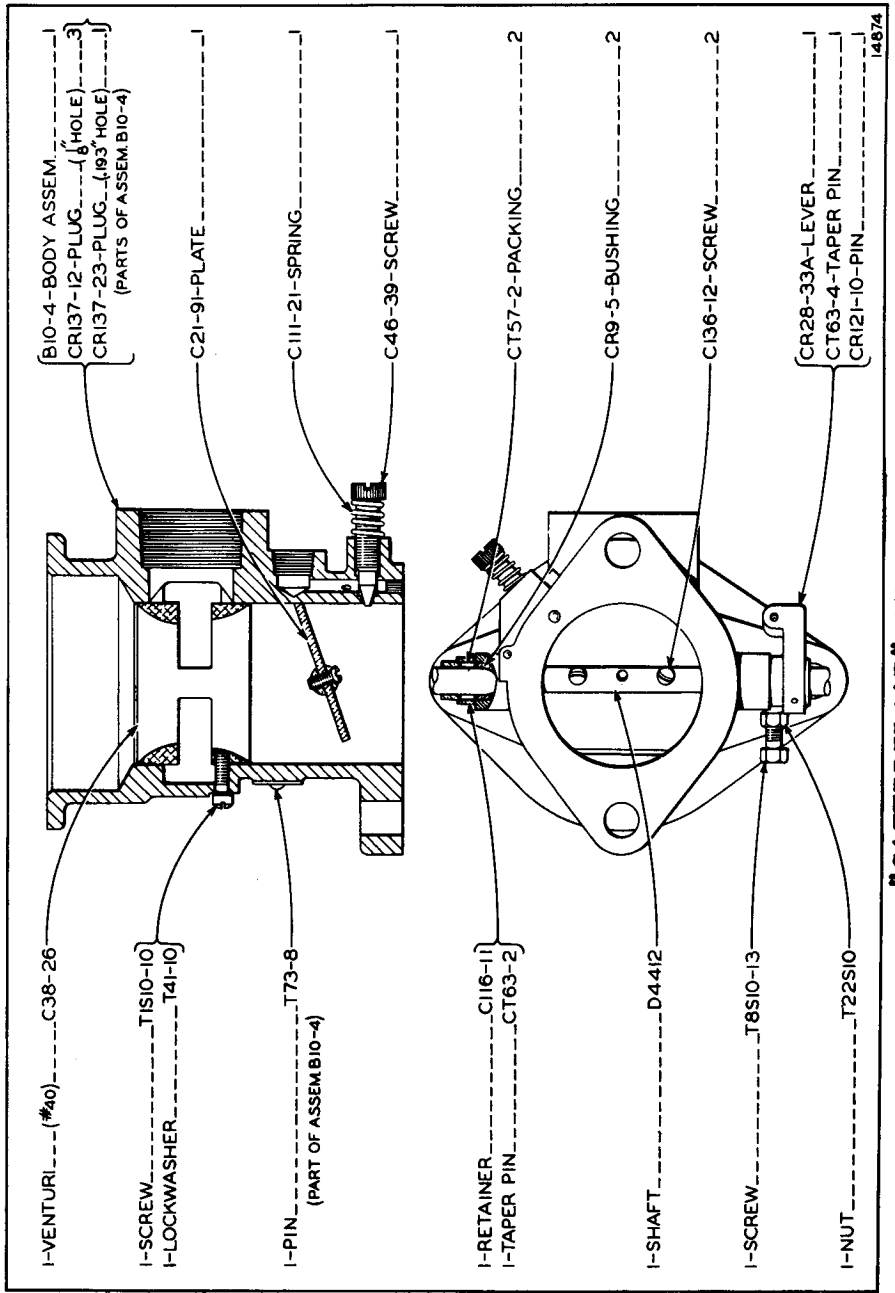


"CATERPILLAR" NO. 6B3610

NUMBERS SHOWN ARE MANUFACTURERS, NOT "CATERPILLAR" PART NUMBERS. EXCEPT WHEN SPECIFIED.

Form 1736 Printed in U. S. A. Issue 1 6-15-40

# ENSIGN CARBURETOR - TYPE Kg1, 2"
# NO. 4773

Manufacturer
**ENSIGN CARBURETOR CO., LTD.**
7010 S. Alameda St. Huntington Park, Calif.
or
2614 S. Michigan Ave. Chicago, Ill.

For Parts Service on this Carburetor, Order from the Manufacturer or his Representative

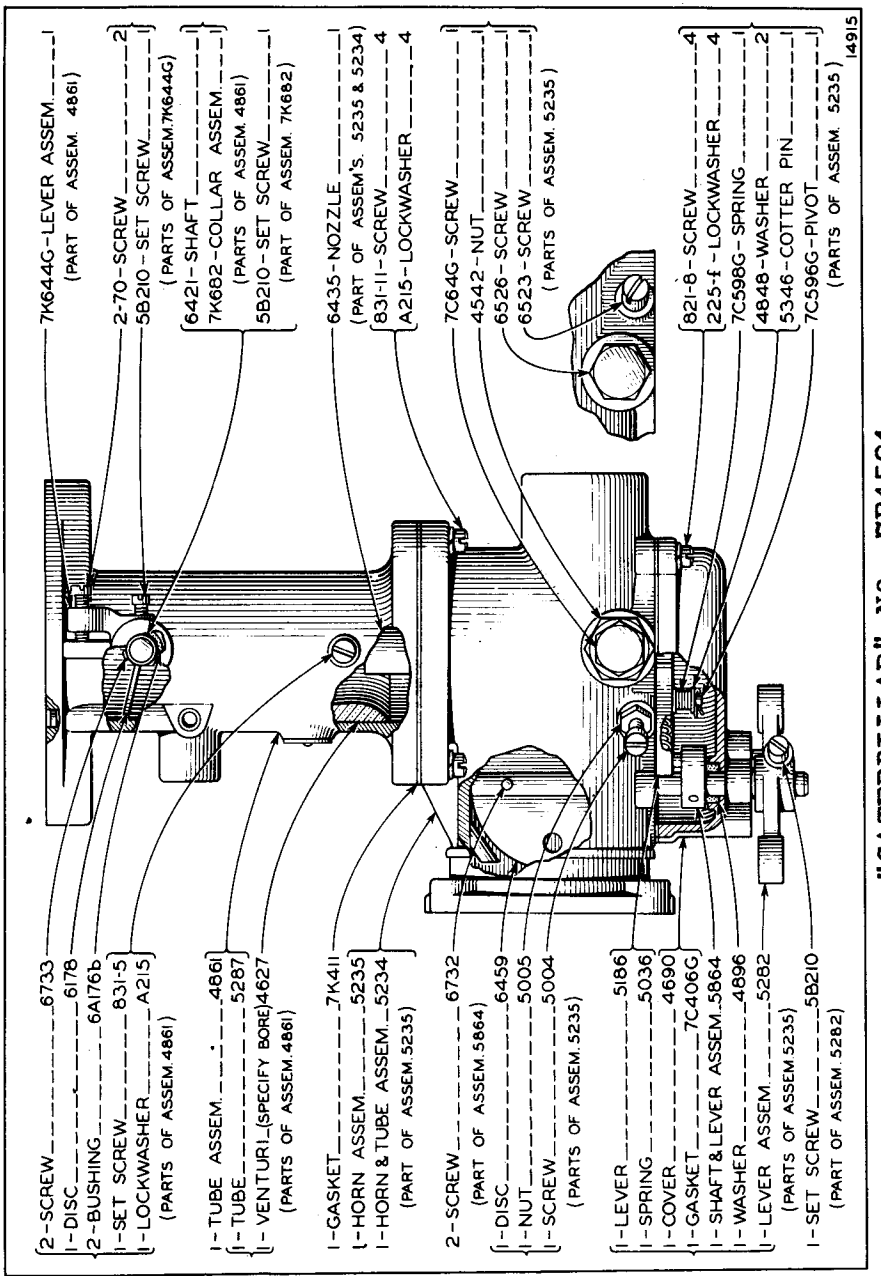


"CATERPILLAR" NO. 7B4584

NUMBERS SHOWN ARE MANUFACTURERS, NOT "CATERPILLAR" PART NUMBERS, EXCEPT WHEN SPECIFIED.

Form 1736 Printed in U. S. A. Issue 1 10-1-40

# ENSIGN NATURAL GAS PRESSURE REGULATOR TYPE B, 1" No. 5069

ENSIGN CARBURETOR CO., LTD.
7010 S. Alameda St. or 2644 S. Michigan Ave.
Huntington Park, Calif. Chicago, Ill.

For Parts Service on this Regulator, Order from the Manufacturer or his Representative

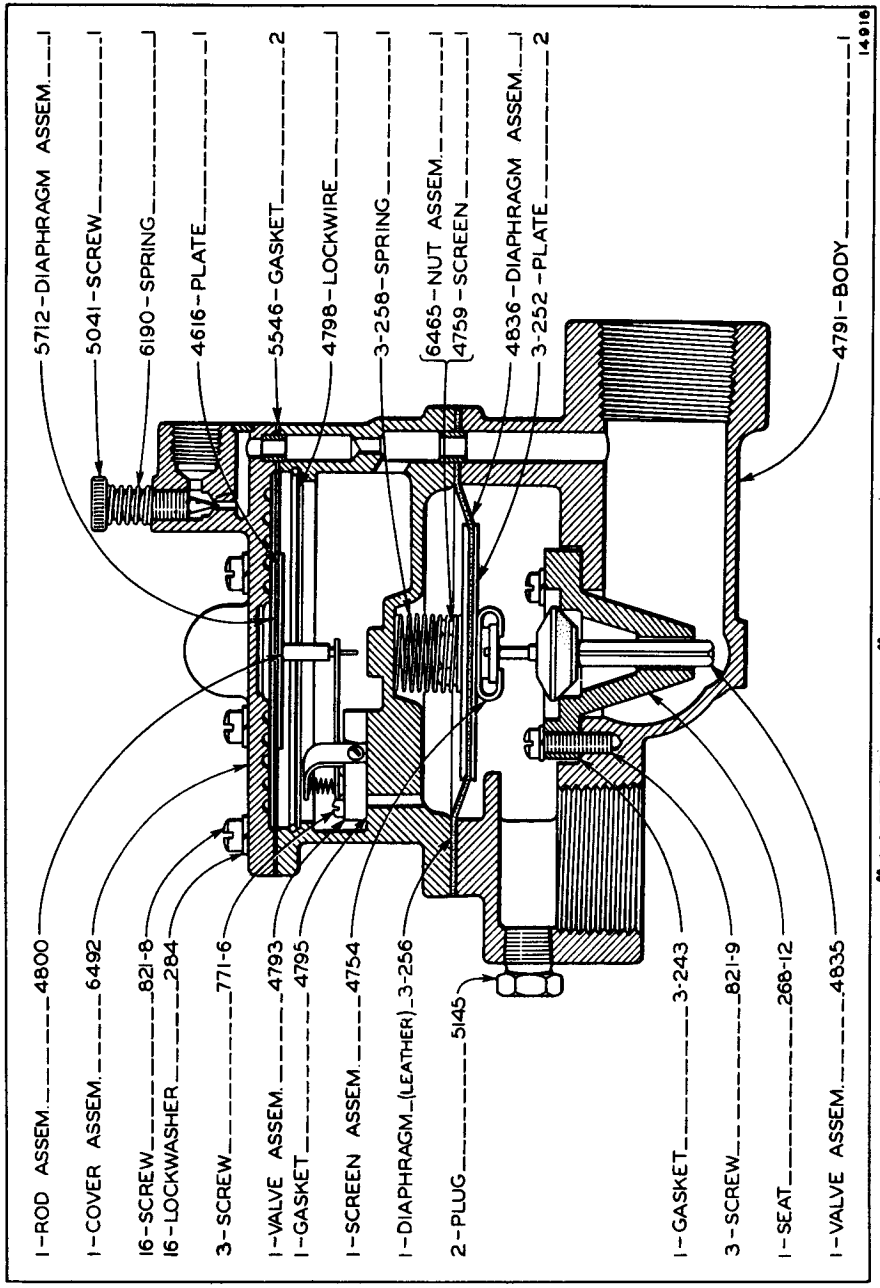


"CATERPILLAR" NO. 7B5231

NUMBERS SHOWN ARE MANUFACTURERS, NOT "CATERPILLAR" PART NUMBERS, EXCEPT WHEN SPECIFIED.

Form 1736 Printed in U. S. A. Issue 1 6-15-40

# LEECE-NEVILLE STARTING MOTOR SWITCH TYPE 21-MS-32

Manufacturer
**LEECE-NEVILLE Company**
5363 Hamilton Avenue N.E.
Cleveland, Ohio

For Parts Service on this Switch, Order from the Manufacturer or his Representative

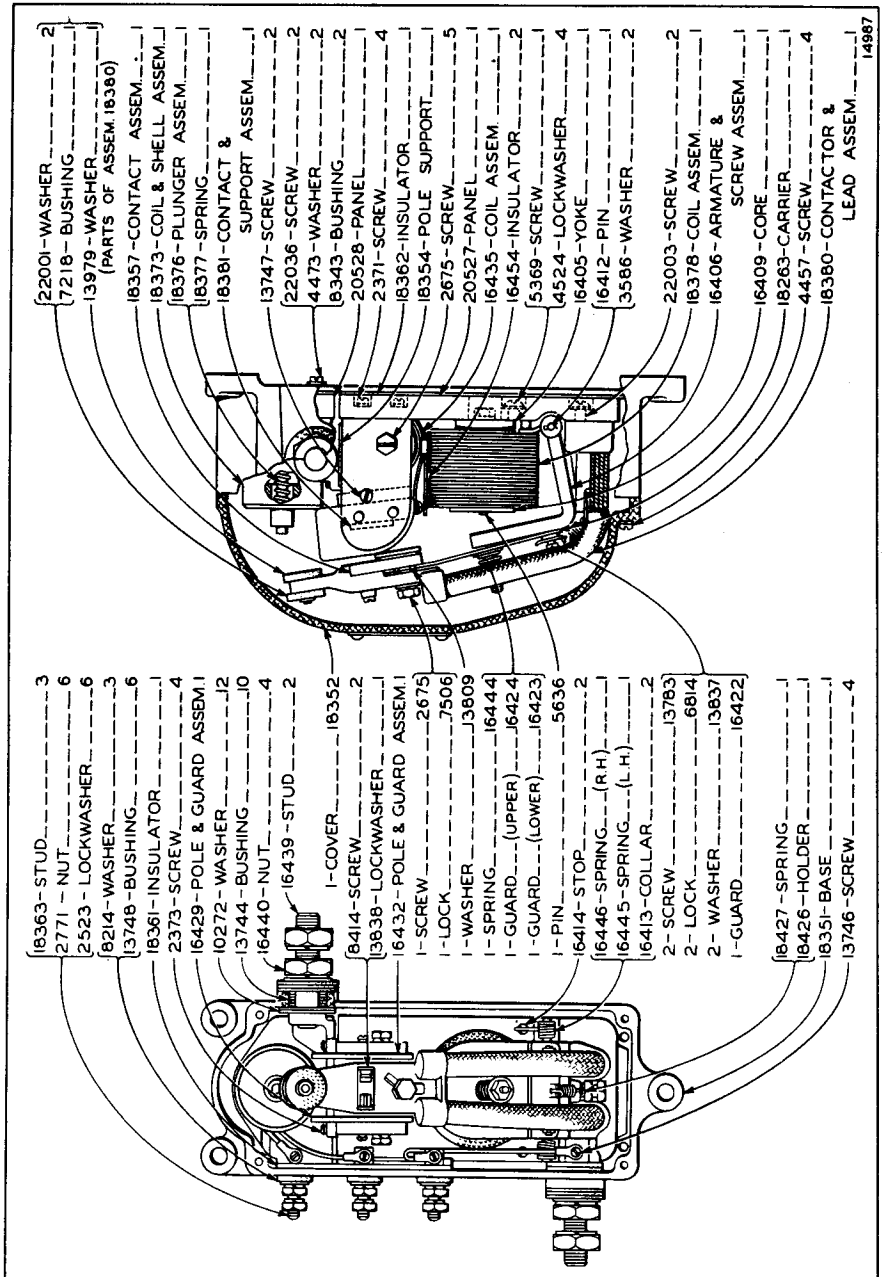


"CATERPILLAR" NO. 4B7444

NUMBERS SHOWN ARE MANUFACTURERS, NOT "CATERPILLAR" PART NUMBERS, EXCEPT WHEN SPECIFIED.

Form 1736 Printed in U.S.A. Issue 1 6-15-40

# ZENITH CARBURETOR - MODEL 22AX8-No. 9538

Manufacturer
ZENITH CARBURETOR DIVISION
BENDIX AVIATION CORPORATION
696 Hart Avenue
Detroit, Michigan

For Parts Service on this Carburetor, Order from the Manufacturer or his Representative

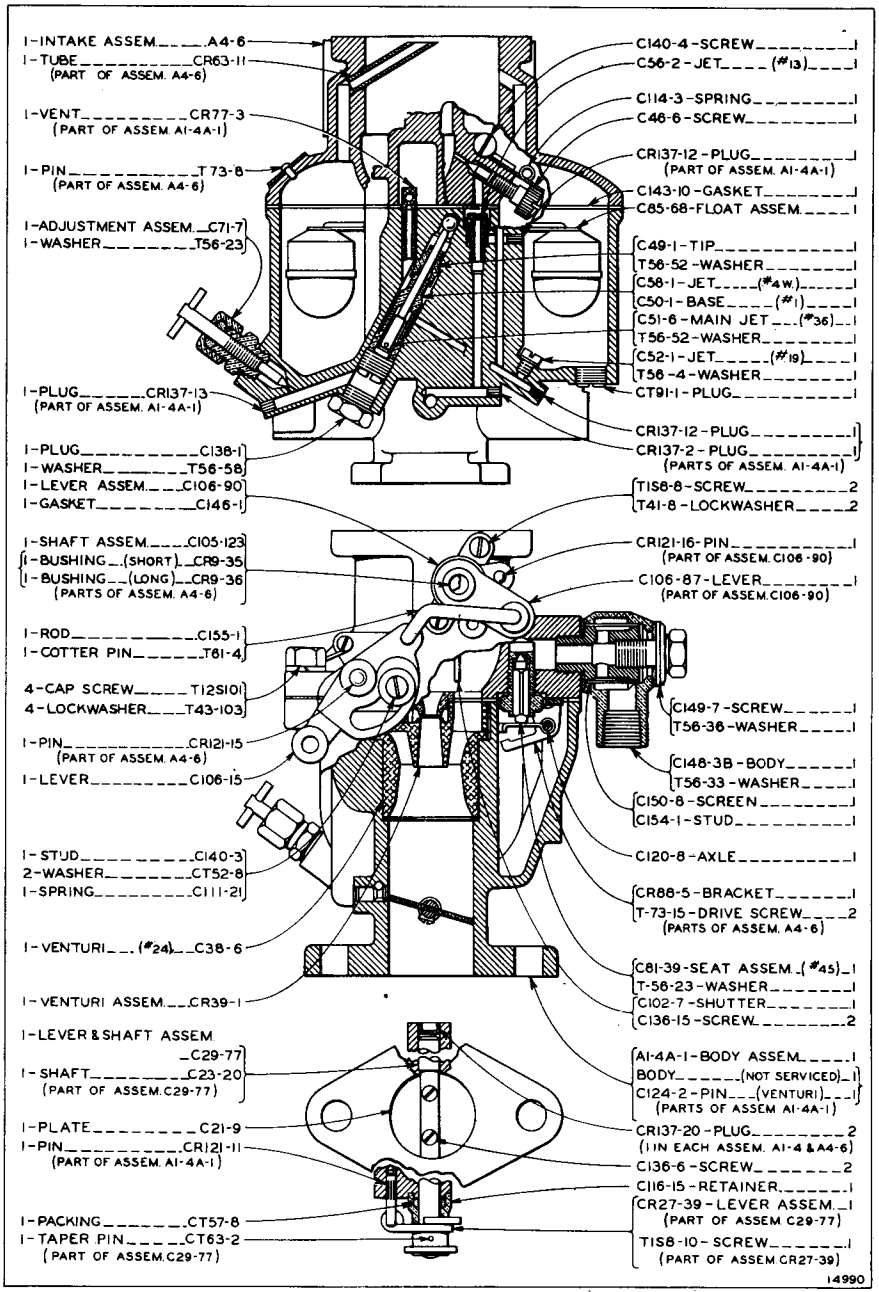


NUMBERS SHOWN ARE MANUFACTURERS, NOT "CATERPILLAR" PART NUMBERS, EXCEPT WHEN SPECIFIED.

Form 1736 Printed in U. S. A. Issue 1 10-1-40

"CATERPILLAR" NO. 7B4720

# ZENITH CARBURETOR - MODEL 22AX8-No. 9539

**Manufacturer**
**ZENITH CARBURETOR DIVISION**
**BENDIX AVIATION CORPORATION**
**696 Hart Avenue**
**Detroit, Michigan**

**For Parts Service on this Carburetor, Order from the Manufacturer or his Representative**

Form 1736 Printed in U.S.A. Issue 1 11-1-40

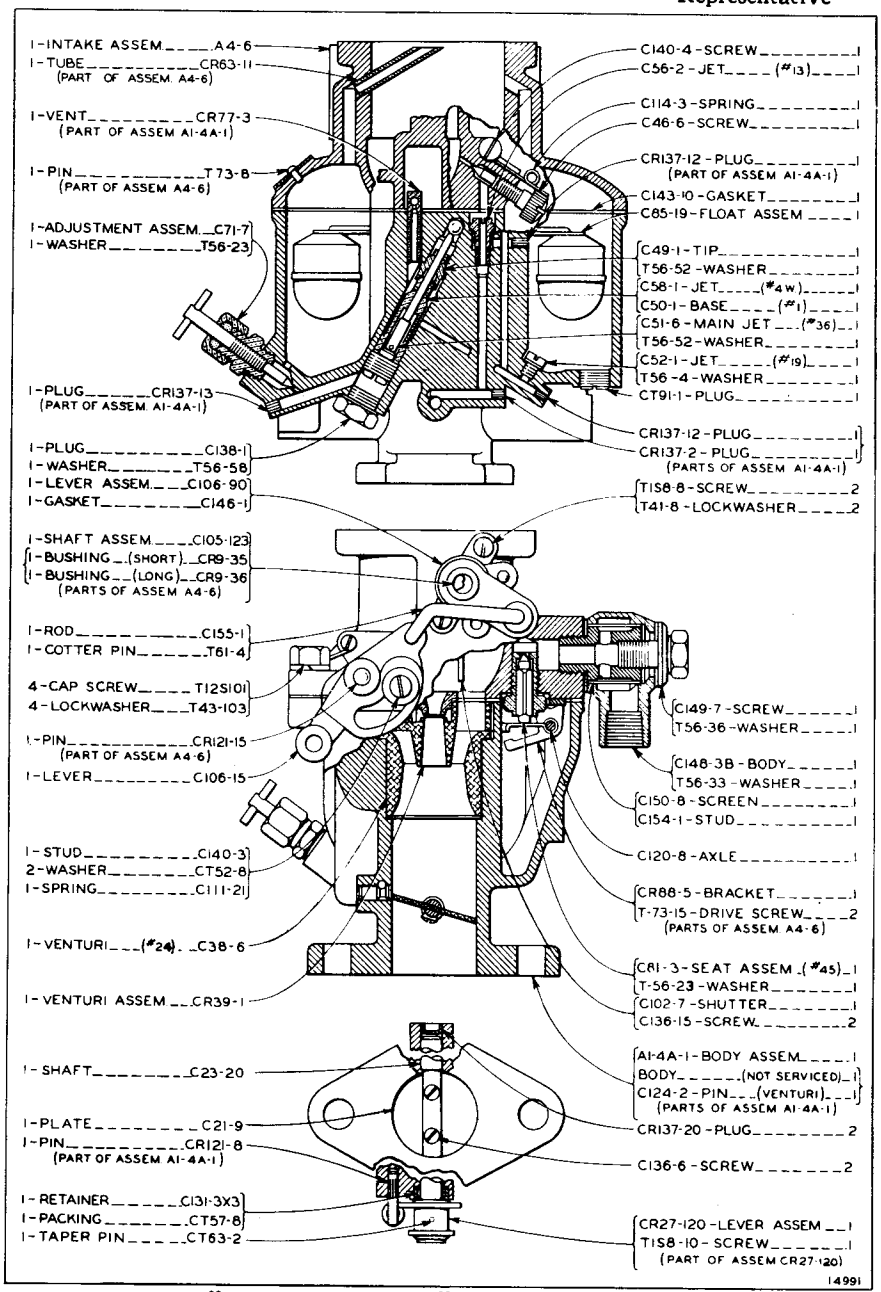


**"CATERPILLAR" NO. 7B4721**

**NUMBERS SHOWN ARE MANUFACTURERS, NOT "CATERPILLAR" PART NUMBERS, EXCEPT WHEN SPECIFIED.**

# LEECE-NEVILLE GENERATOR TYPE 1497-G

Manufacturer
LEECE-NEVILLE COMPANY
5363 Hamilton Avenue N. E.
Cleveland, Ohio

For Parts Service on this Generator, Order from the Manufacturer or his Representative

Form 1736 Printed in U. S. A. Issue 1 7-1-40

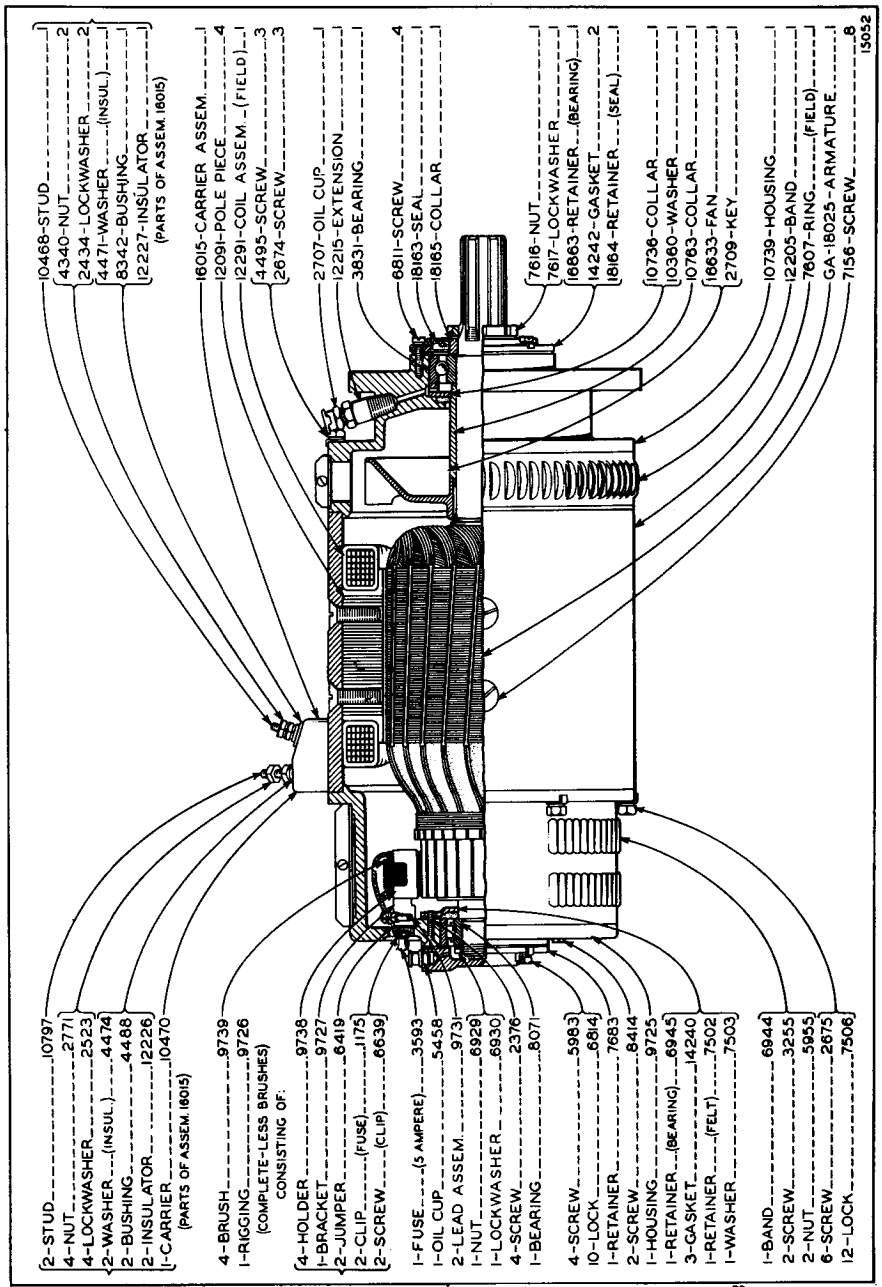


"CATERPILLAR" NO. 5B4905 GENERATOR

NUMBERS SHOWN ARE MANUFACTURERS, NOT "CATERPILLAR" PART NUMBERS, EXCEPT WHEN SPECIFIED.

# DONALDSON AIR CLEANER MODEL A-1028

Manufacturer
DONALDSON COMPANY, Inc.
666 Pelham Street
Saint Paul, Minn.

For Parts Service on this Air Cleaner, Order from the Caterpillar Tractor Co.
Peoria, Ill. or
San Leandro, Cal.

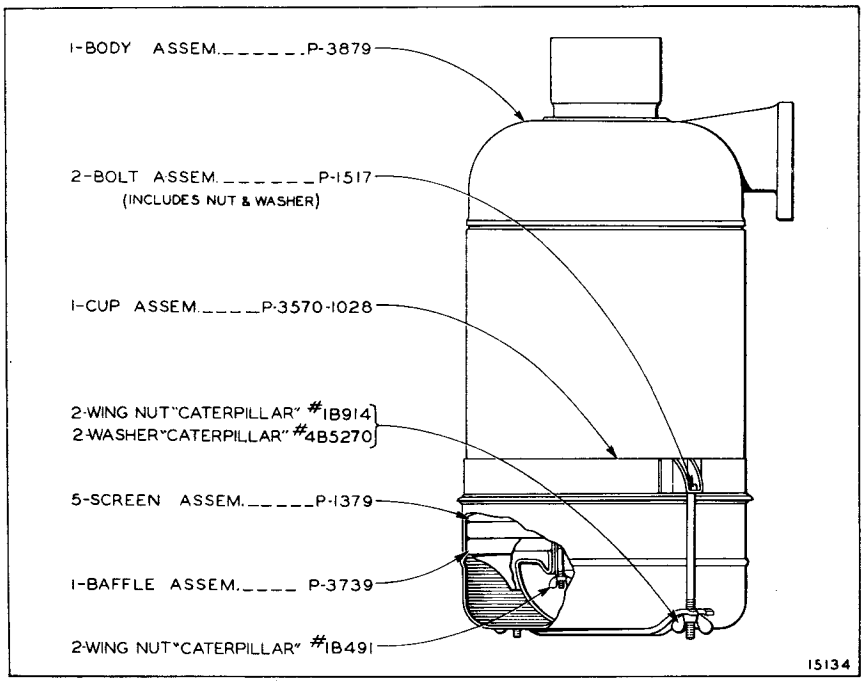


"CATERPILLAR" NO. 7B7769

Form 1736 Printed in U.S.A. Issue 1 11-1-40

NUMBERS SHOWN ARE MANUFACTURERS, NOT "CATERPILLAR" PART NUMBERS, EXCEPT WHEN SPECIFIED.

# LEECE-NEVILLE STARTING MOTOR
## TYPE 1214-M

Manufacturer
LEECE-NEVILLE COMPANY
5363 Hamilton Avenue N. E.
Cleveland, Ohio

For Parts Service on this Starting Motor, Order from the Manufacturer or his Representative

Form 1736 Printed in U.S.A. Issue 1 11-1-40




"CATERPILLAR" NO. 7B7967

NOTE: SEE BACK OF PAGE 322 FOR 12868 BENDIX DRIVE PARTS.

NUMBERS SHOWN ARE MANUFACTURERS, NOT "CATERPILLAR" PART NUMBERS, EXCEPT WHEN SPECIFIED.

# LEECE-NEVILLE GENERATOR TYPE 2128-G

Manufacturer
LEECE-NEVILLE COMPANY
5363 Hamilton Avenue N. E.
Cleveland, Ohio

For Parts Service on this Generator, Order from the Manufacturer or his Representative

Form 1736 Printed in U. S. A. Issue 1 12-1-40

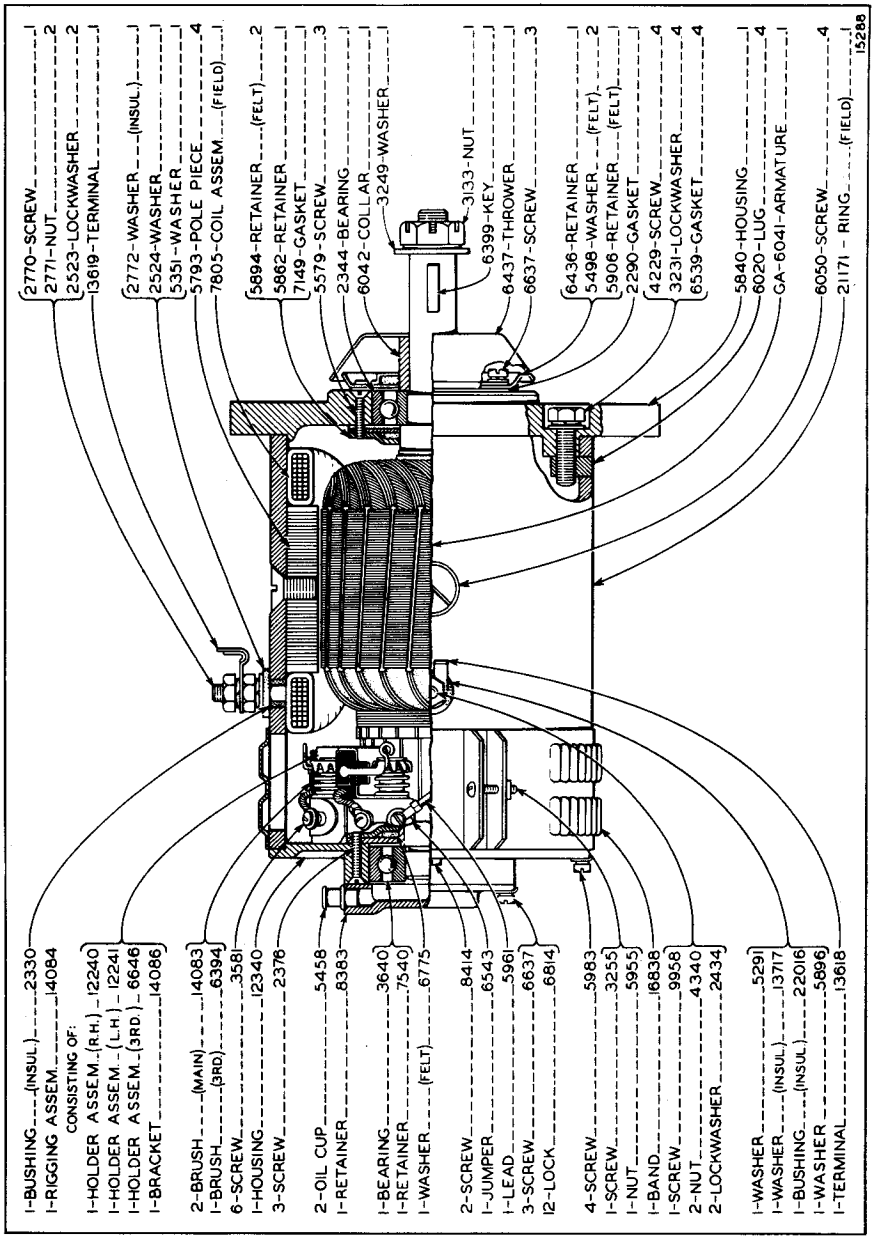


"CATERPILLAR" NO. 7B990

NUMBERS SHOWN ARE MANUFACTURERS, NOT "CATERPILLAR" PART NUMBERS, EXCEPT WHEN SPECIFIED.

# LEECE-NEVILLE GENERATOR TYPE 1604-G

Manufacturer
LEECE-NEVILLE COMPANY
5363 Hamilton Avenue N.E.
Cleveland, Ohio

For Parts Service on this Generator, Order from the Manufacturer or his Representative

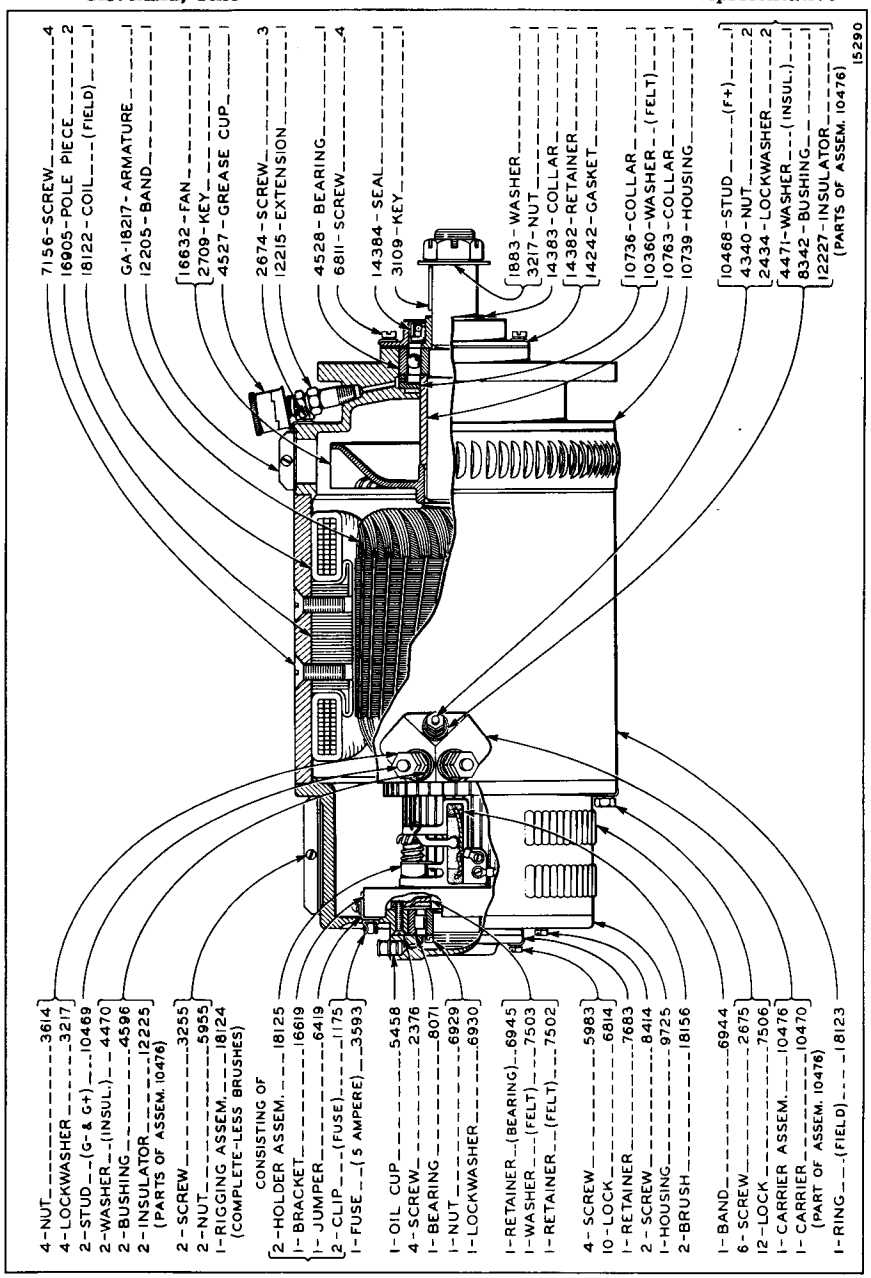


"CATERPILLAR" NO. 5B7538

NUMBERS SHOWN ARE MANUFACTURERS, NOT "CATERPILLAR" PART NUMBERS, EXCEPT WHEN SPECIFIED.

Form 1736 Printed in U.S.A. Issue 1 5-15-41

# LEECE-NEVILLE STARTING MOTOR SWITCH TYPE 31-SPS

Manufacturer
LEECE-NEVILLE COMPANY
5363 Hamilton Avenue N. E.
Cleveland, Ohio

For Parts Service on this Switch, Order from the Manufacturer or his Representative

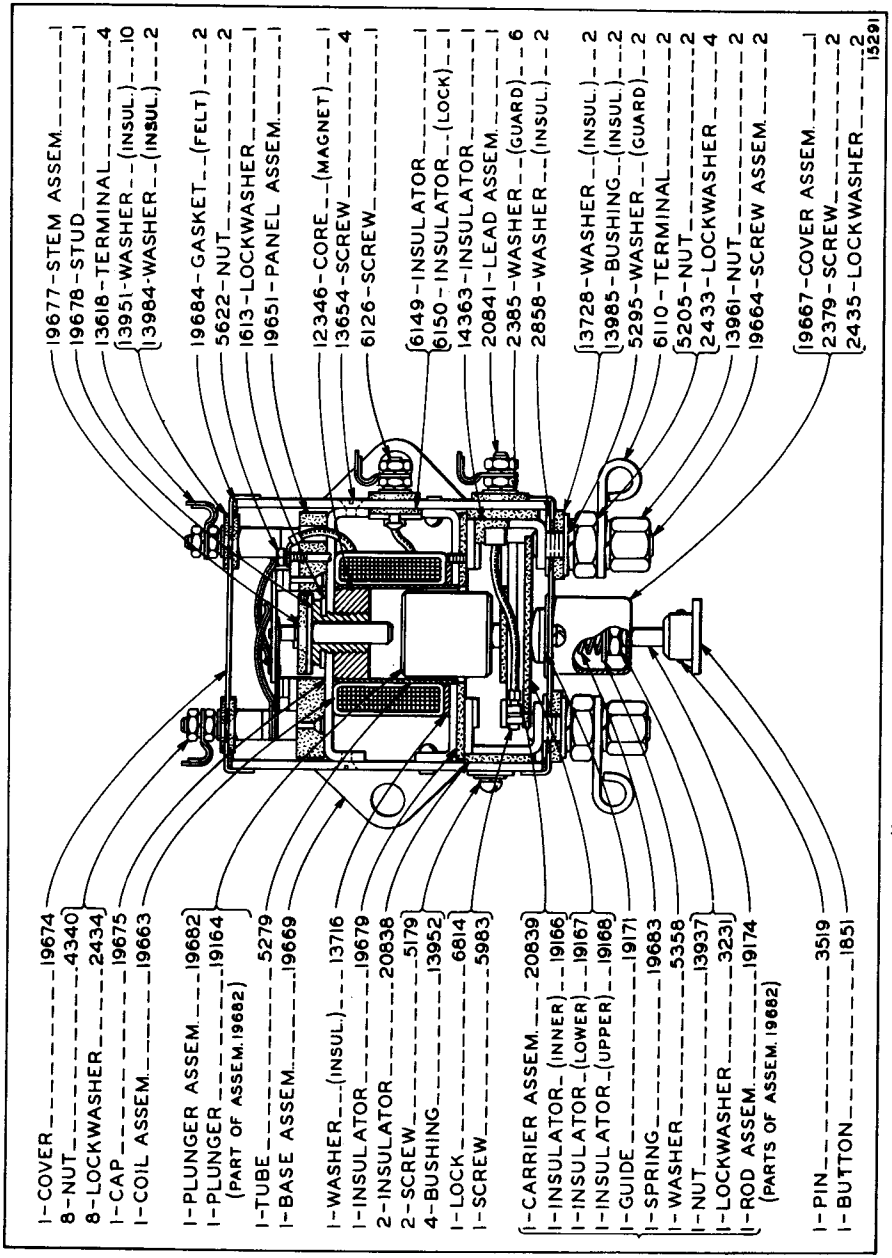


"CATERPILLAR" NO. 6B5807

NUMBERS SHOWN ARE MANUFACTURERS, NOT "CATERPILLAR" PART NUMBERS, EXCEPT WHEN SPECIFIED.

Form 1736 Printed in U. S. A. Issue 1 12-1-40

# ALEMITE PUSH TYPE COMPRESSOR NO. 6556-D

Manufacturer
STEWART-WARNER CORPORATION
1826-1852 Diversey Parkway
Chicago, Illinois

For Parts Service on this Compressor, Order from the Manufacturer or his Representative

Form 1736 Printed in U.S.A. Issue 1 10-1-40

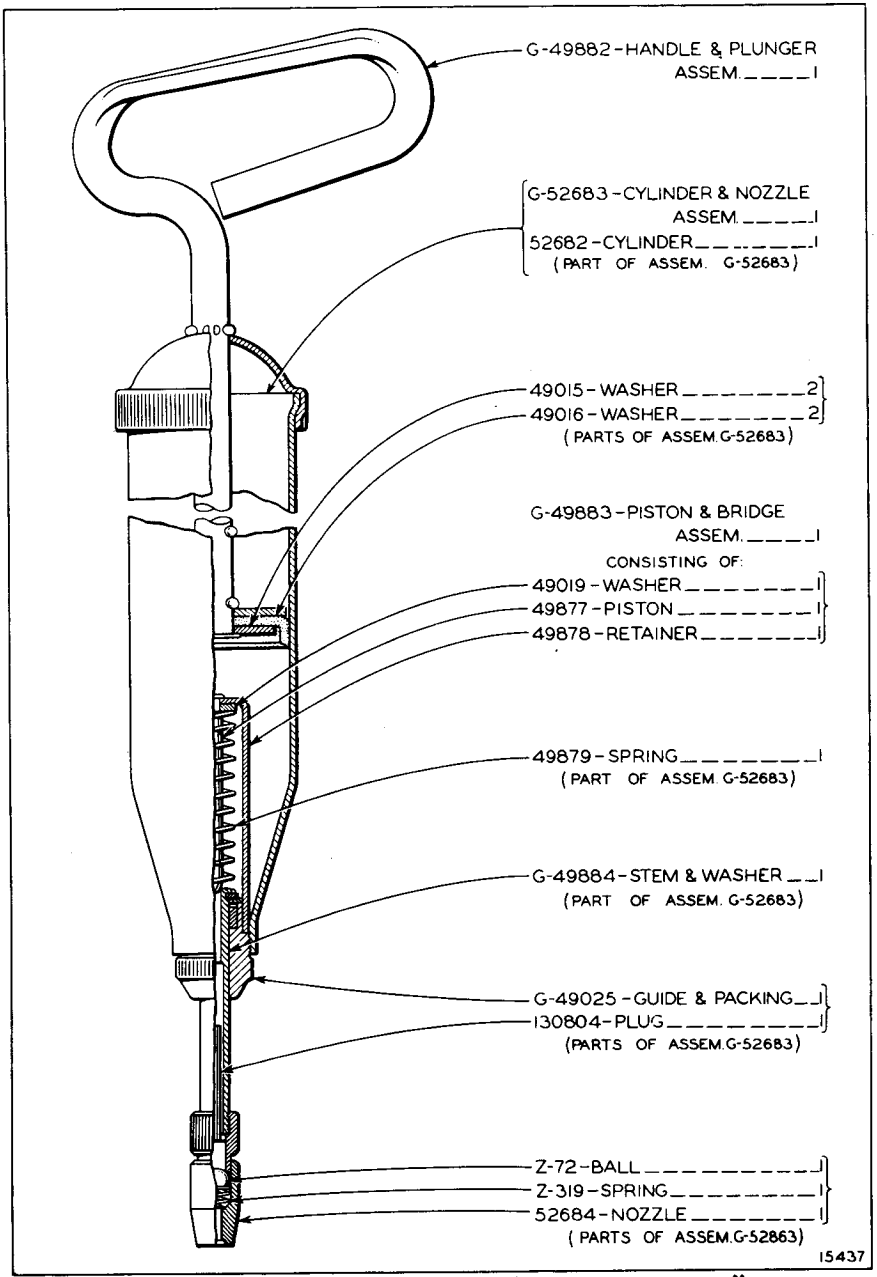


5 OZ. CAPACITY

NUMBERS SHOWN ARE MANUFACTURERS, NOT "CATERPILLAR" PART NUMBERS, EXCEPT WHEN SPECIFIED.

# DELCO-REMY GENERATOR MODEL 1101666

Manufacturer
DELCO-REMY DIVISION
General Motors Corporation
Anderson, Indiana

For Parts Service on this Generator, Order from the Manufacturer or his Representative

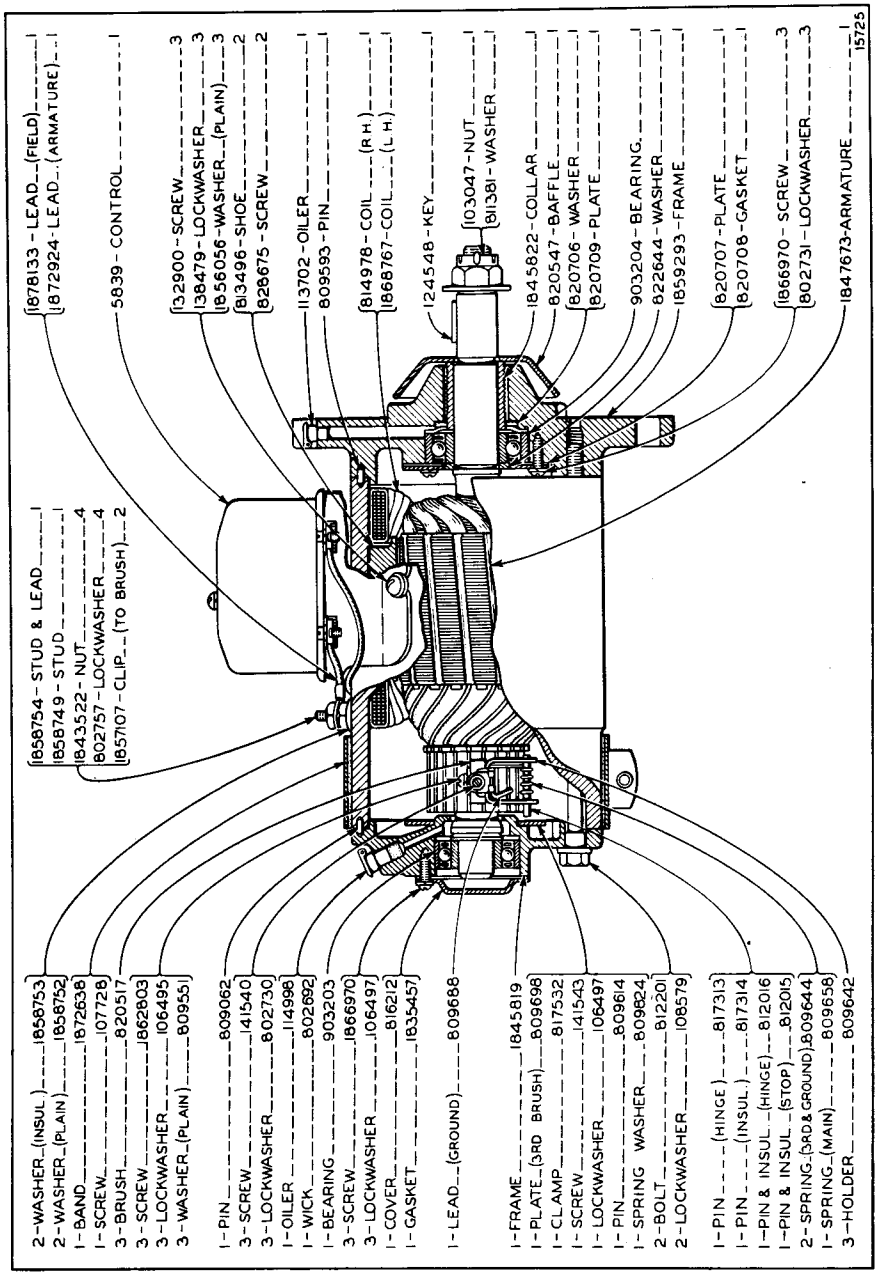


"CATERPILLAR" NO. 6B1809

NUMBERS SHOWN ARE MANUFACTURERS, NOT "CATERPILLAR" PART NUMBERS, EXCEPT WHEN SPECIFIED.

Form 1736 Printed in U.S.A. Issue 1 11-1-40

# DONALDSON BREATHER MODEL P-3545

Manufacturer
DONALDSON COMPANY, Inc.
666 Pelham Street
Saint Paul, Minn.

For Parts Service on this Breather, Order from the Manufacturer or his Representative

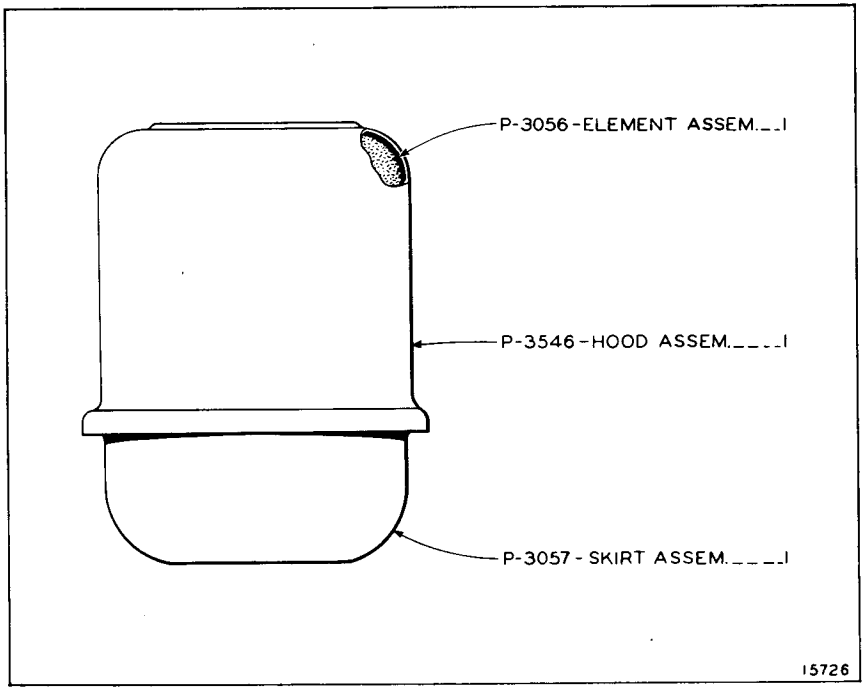


"CATERPILLAR" NO. 6B6457

Form 1736 Printed in U.S.A. Issue 1 11-1-40

NUMBERS SHOWN ARE MANUFACTURERS, NOT "CATERPILLAR" PART NUMBERS, EXCEPT WHEN SPECIFIED.

# ZENITH CARBURETOR - MODEL TU4CV-No. 9548A

Manufacturer
ZENITH CARBURETOR DIVISION
BENDIX AVIATION CORPORATION
696 Hart Avenue
Detroit, Michigan

For Parts Service on this Carburetor, Order from the Manufacturer or his Representative

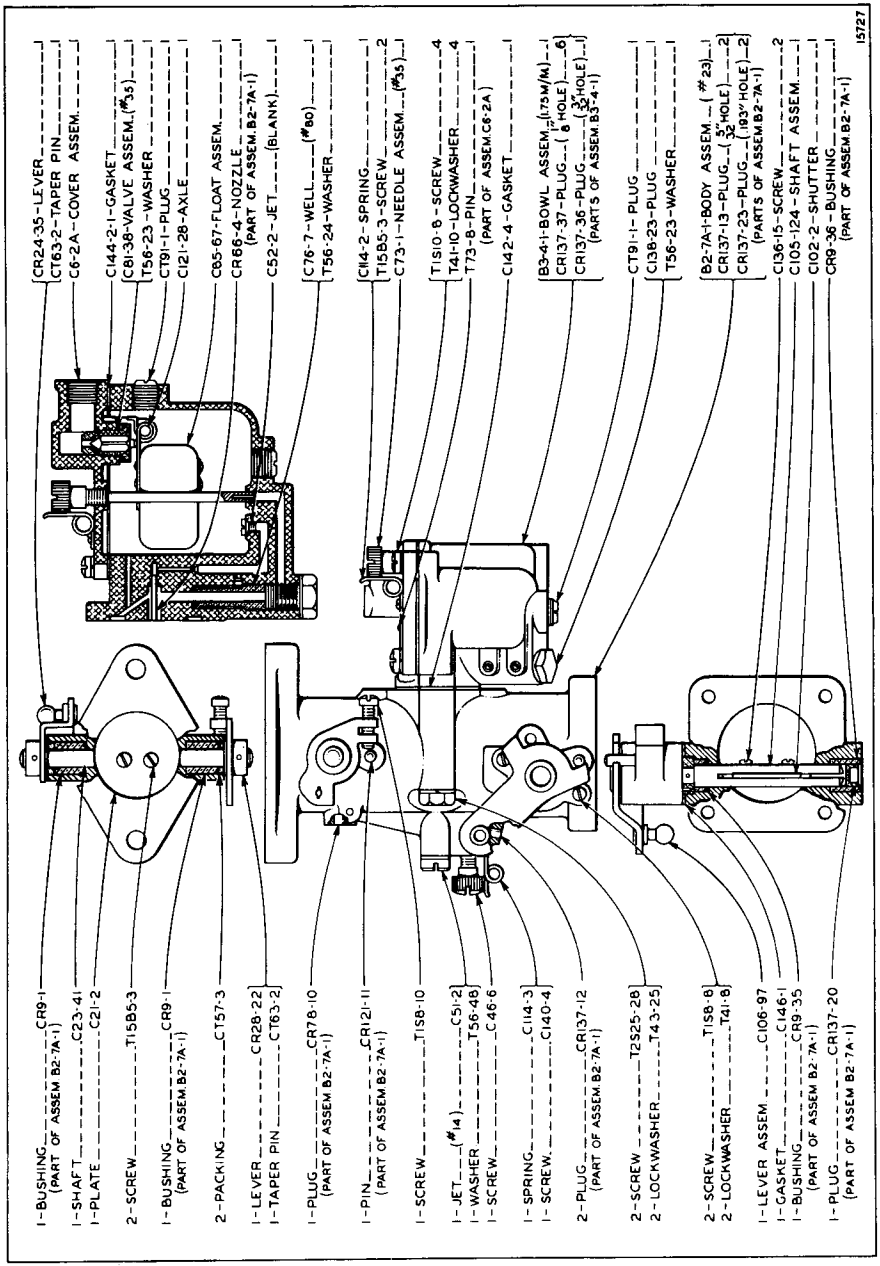


"CATERPILLAR" NO. 7B4718

NUMBERS SHOWN ARE MANUFACTURERS, NOT "CATERPILLAR" PART NUMBERS, EXCEPT WHEN SPECIFIED.

Form 1736 Printed in U.S.A. Issue 1 11-1-40

# ZENITH CARBURETOR - MODEL TU4C-No. 9546A

Manufacturer
**ZENITH CARBURETOR DIVISION**
**BENDIX AVIATION CORPORATION**
**696 Hart Avenue**
**Detroit, Michigan**

For Parts Service on this Carburetor, Order from the Manufacturer or his Representative

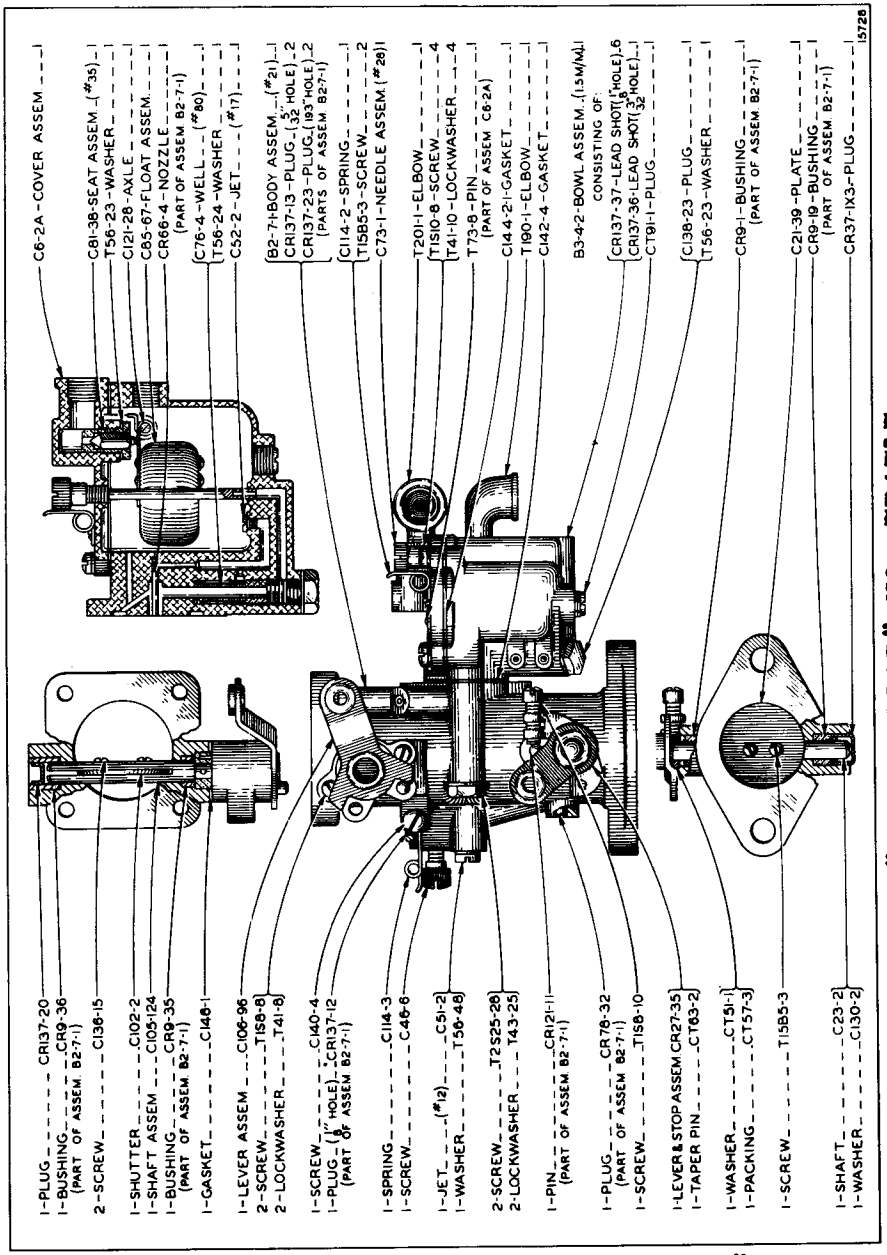


"CATERPILLAR" NO. 7B4717

**NUMBERS SHOWN ARE MANUFACTURERS, NOT "CATERPILLAR" PART NUMBERS, EXCEPT WHEN SPECIFIED.**

Form 1736 Printed in U.S.A. Issue 1 11-1-40

# ZENITH CARBURETOR - MODEL TU4C-No. 9547A

Manufacturer
ZENITH CARBURETOR DIVISION
BENDIX AVIATION CORPORATION
696 Hart Avenue
Detroit, Michigan

For Parts Service on this Carburetor, Order from the Manufacturer or his Representative

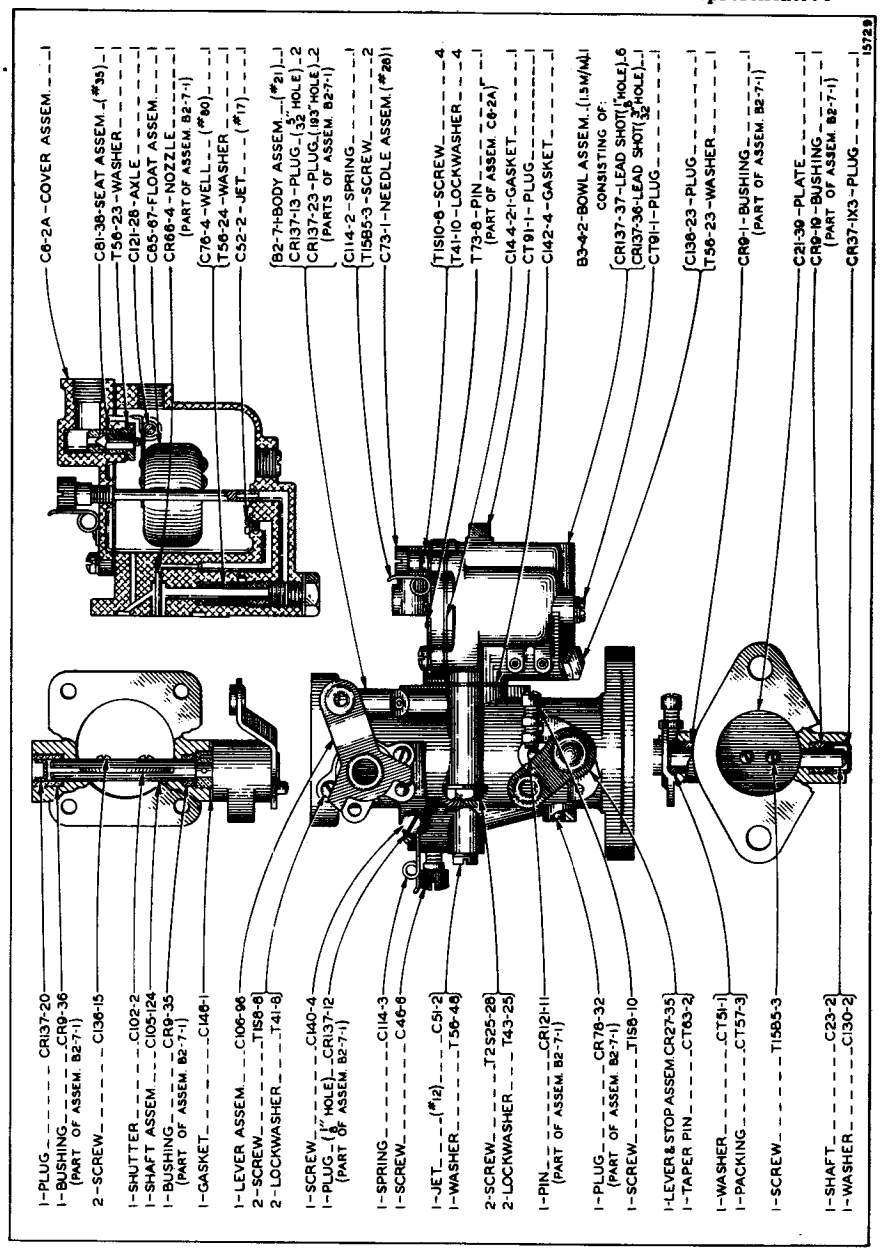


"CATERPILLAR" NO. 7B4722

NUMBERS SHOWN ARE MANUFACTURERS, NOT "CATERPILLAR" PART NUMBERS, EXCEPT WHEN SPECIFIED.

Form 1738 Printed in U. S. A. Issue 1 12-1-40

# ZENITH CARBURETOR - MODEL TU4C-No. 9545A

Manufacturer
ZENITH CARBURETOR DIVISION
BENDIX AVIATION CORPORATION
696 Hart Avenue
Detroit, Michigan

For Parts Service on this Carburetor, Order from the Manufacturer or his Representative

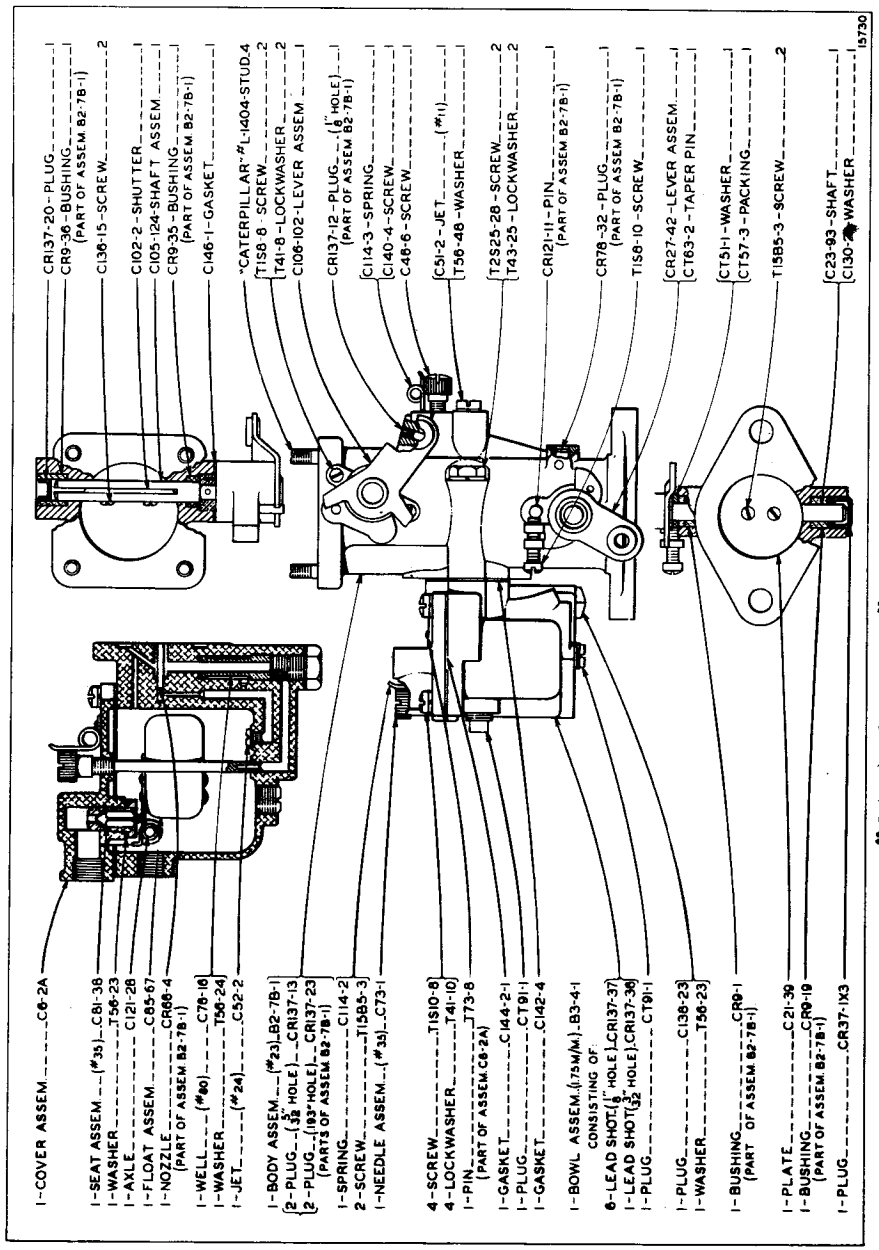


"CATERPILLAR" NO. 7B4723

**NUMBERS SHOWN ARE MANUFACTURERS, NOT "CATERPILLAR" PART NUMBERS, EXCEPT WHEN SPECIFIED.**

Form 1738 Printed in U. S. A. Issue 1 12-1-40

# ZENITH CARBURETOR - MODEL TU4C-No. 9549A

Manufacturer
ZENITH CARBURETOR DIVISION
BENDIX AVIATION CORPORATION
696 Hart Avenue
Detroit, Michigan

For Parts Service on this Carburetor, Order from the Manufacturer or his Representative

Form 1736 Printed in U.S.A. Issue 1 11-1-40

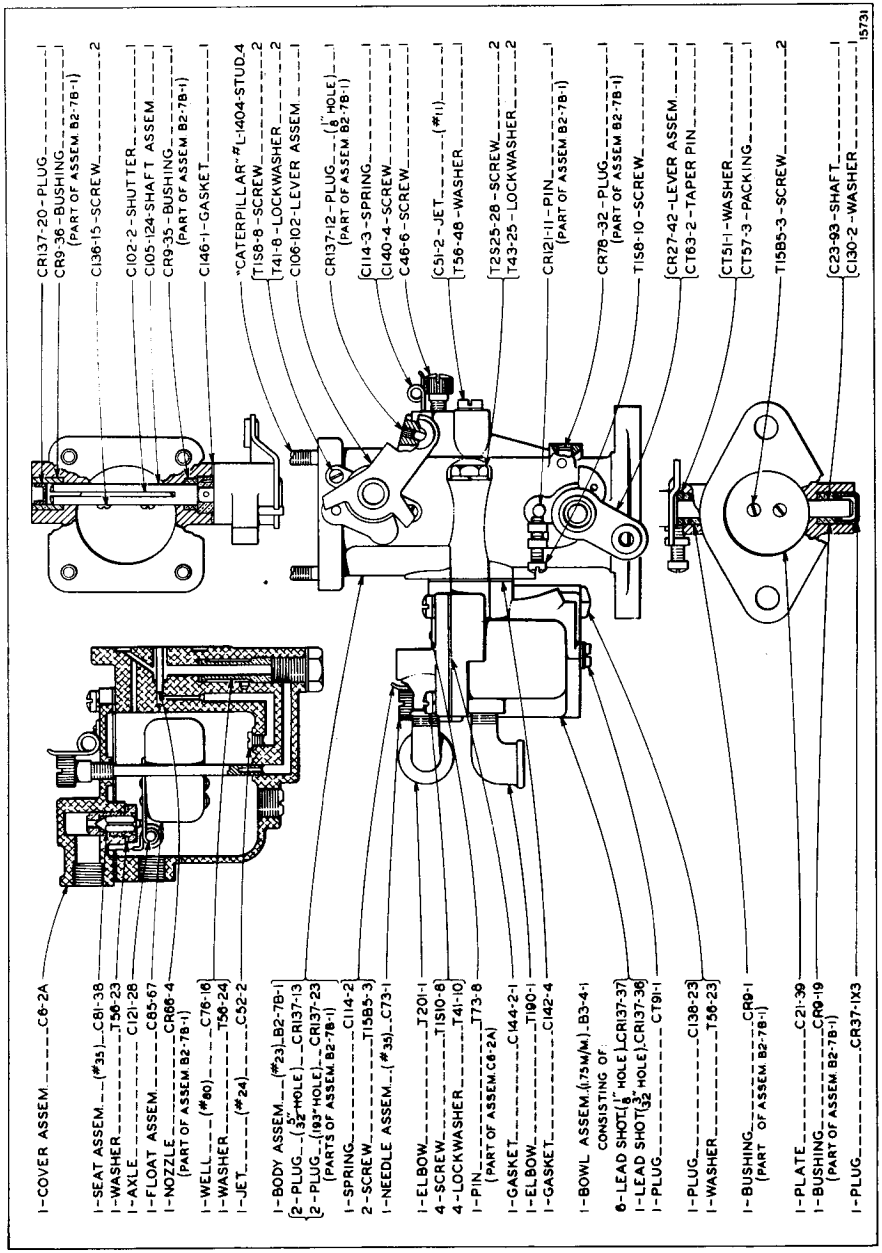


"CATERPILLAR" NO. 7B4724

NUMBERS SHOWN ARE MANUFACTURERS, NOT "CATERPILLAR" PART NUMBERS, EXCEPT WHEN SPECIFIED.

# LEECE-NEVILLE REGULATOR TYPE

## 1945R & 2125R

Manufacturer
LEECE-NEVILLE COMPANY
5363 Hamilton Avenue N. E.
Cleveland, Ohio

For Parts Service on this Regulator, Order from the Manufacturer or his Representative

Form 1736 Printed in U. S. A. Issue 1 12-1-40




"CATERPILLAR" NO. 6B1602 (1945R-30 Ampere)
"CATERPILLAR" NO. 7B6921 (2125R-30 Ampere)

NUMBERS SHOWN ARE MANUFACTURERS, NOT "CATERPILLAR" PART NUMBERS, EXCEPT WHEN SPECIFIED.

# LEECE-NEVILLE GENERATOR TYPE 2125G

Manufacturer
LEECE-NEVILLE COMPANY
5363 Hamilton Avenue N. E.
Cleveland, Ohio

For Parts Service on this Generator, Order from the Manufacturer or his Representative

Form 1736 Printed in U. S. A. Issue 1 12-1-40

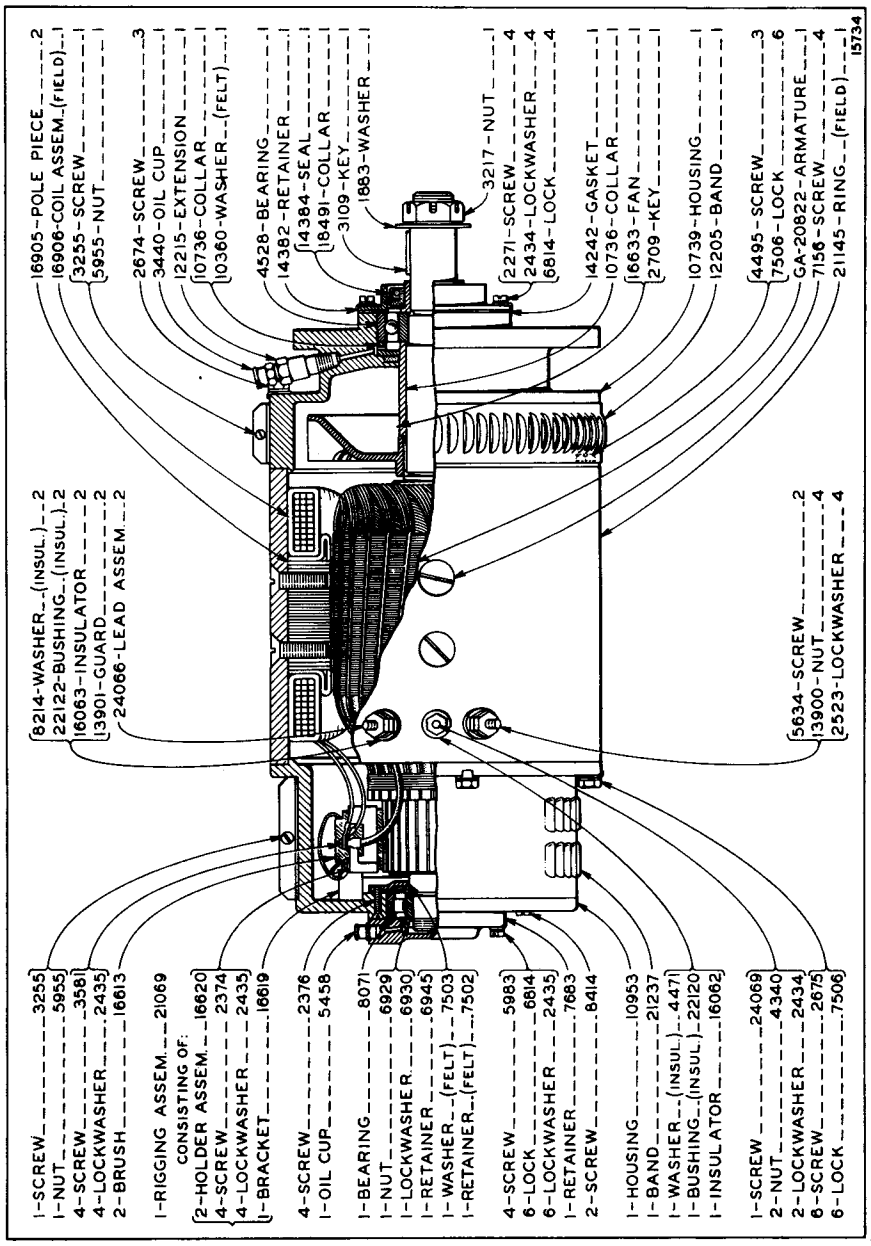


"CATERPILLAR" NO. 7B6919

NUMBERS SHOWN ARE MANUFACTURERS, NOT "CATERPILLAR" PART NUMBERS, EXCEPT WHEN SPECIFIED.

# LEECE-NEVILLE GENERATOR TYPE 2031G

Manufacturer
LEECE-NEVILLE COMPANY
5363 Hamilton Avenue N. E.
Cleveland, Ohio

For Parts Service on this Generator, Order from the Manufacturer or his Representative

Form 1736 Printed in U. S. A. Issue 1 12-1-40

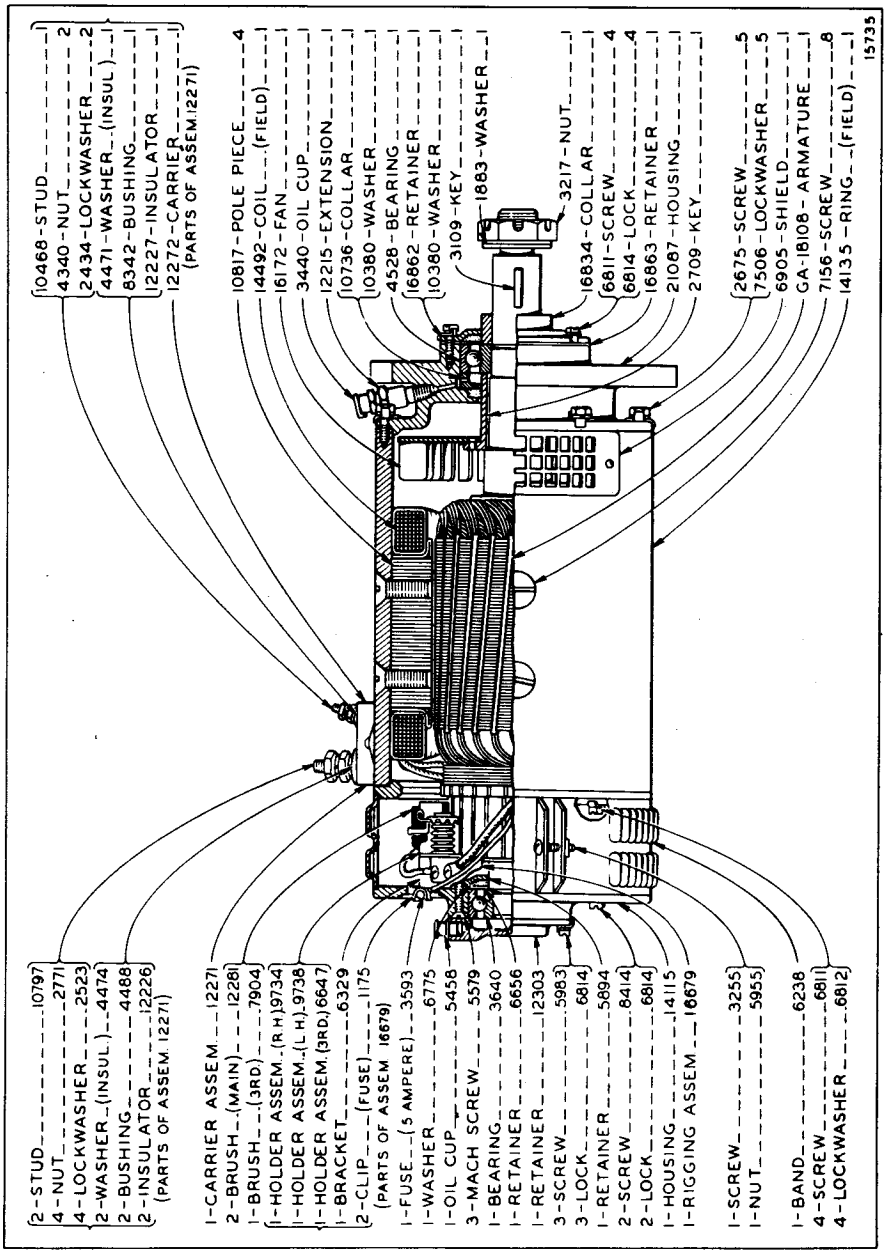


"CATERPILLAR" NO. 7B6918

NUMBERS SHOWN ARE MANUFACTURERS, NOT "CATERPILLAR" PART NUMBERS, EXCEPT WHEN SPECIFIED.

# DONALDSON AIR CLEANER MODEL E-600

Manufacturer
DONALDSON COMPANY, Inc.
666 Pelham Street
Saint Paul, Minn.

For Parts Service on this Air Cleaner, Order from the Caterpillar Tractor Co.
Peoria, Ill. or
San Leandro, Cal.

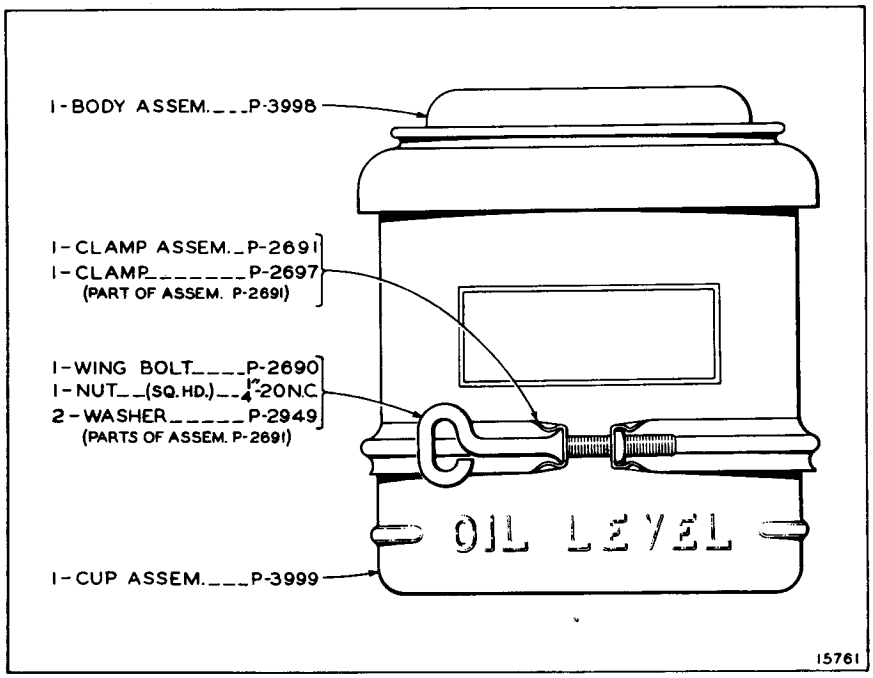


"CATERPILLAR" NO. 8B319

Form 17:38 Printed in U. S. A. Issue 1 12-1-40

NUMBERS SHOWN ARE MANUFACTURERS, NOT "CATERPILLAR" PART NUMBERS, EXCEPT WHEN SPECIFIED.

# BOSCH GENERATORS

## ARJF $\frac{75}{6}$ 900 A21 (Counter clockwise)

## ARJF $\frac{75}{6}$ 900 A22 (Clockwise)

Manufacturer
UNITED AMERICAN BOSCH CORPORATION
Springfield, Massachusetts

For Parts Service on this Generator, Order from the Manufacturer or his Representative

Form 1736 Printed in U. S. A. Issue 1 1-15-41




"CATERPILLAR" NO. 7B8343 (Counter Clockwise)
"CATERPILLAR" NO. 7B8344 (Clockwise)

NOTE: RGC6A1 Regulator Assem. parts are shown on back of page.

NUMBERS SHOWN ARE MANUFACTURERS, NOT "CATERPILLAR" PART NUMBERS, EXCEPT WHEN SPECIFIED.

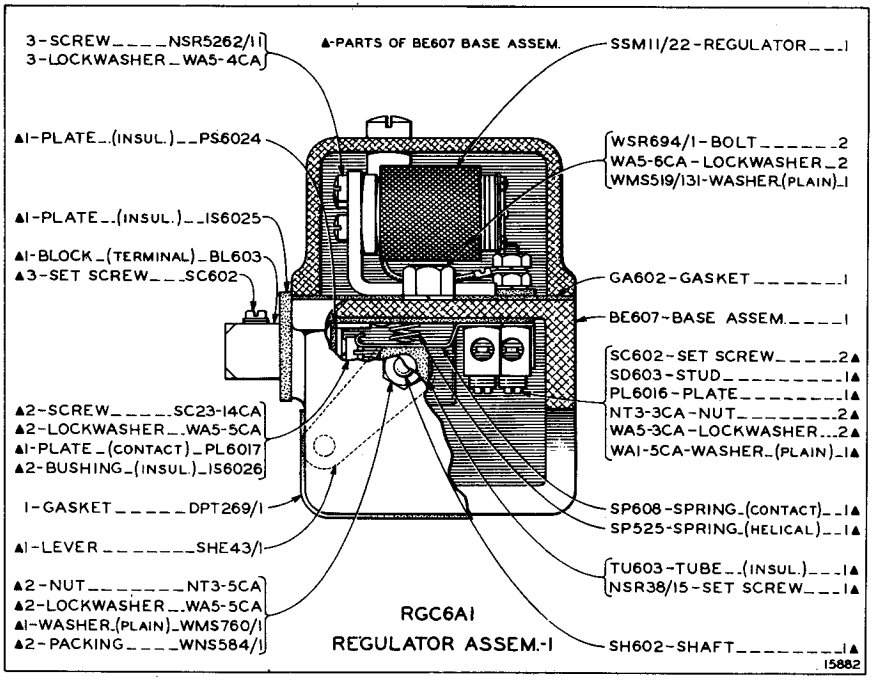


RGC6A1 REGULATOR ASSEMBLY

NUMBERS SHOWN ARE MANUFACTURERS, NOT "CATERPILLAR" PART NUMBERS, EXCEPT WHEN SPECIFIED.

# BOSCH GENERATORS

## ARKF $\frac{130}{6}$ 900 A21 (Counter clockwise)

## ARKF $\frac{130}{6}$ 900 A22 (Clockwise)

Manufacturer
UNITED AMERICAN BOSCH CORPORATION
Springfield, Massachusetts

For Parts Service on this Generator, Order from the Manufacturer or his Representative

Form 1736 Printed in U. S. A. Issue 1 2-1-41




"CATERPILLAR" NO. 7B8345 (Counter Clockwise)
"CATERPILLAR" NO. 7B8346 (Clockwise)

NOTE: RGC6A3 Regulator Assem. parts are shown on back of page.

NUMBERS SHOWN ARE MANUFACTURERS, NOT "CATERPILLAR" PART NUMBERS, EXCEPT WHEN SPECIFIED.

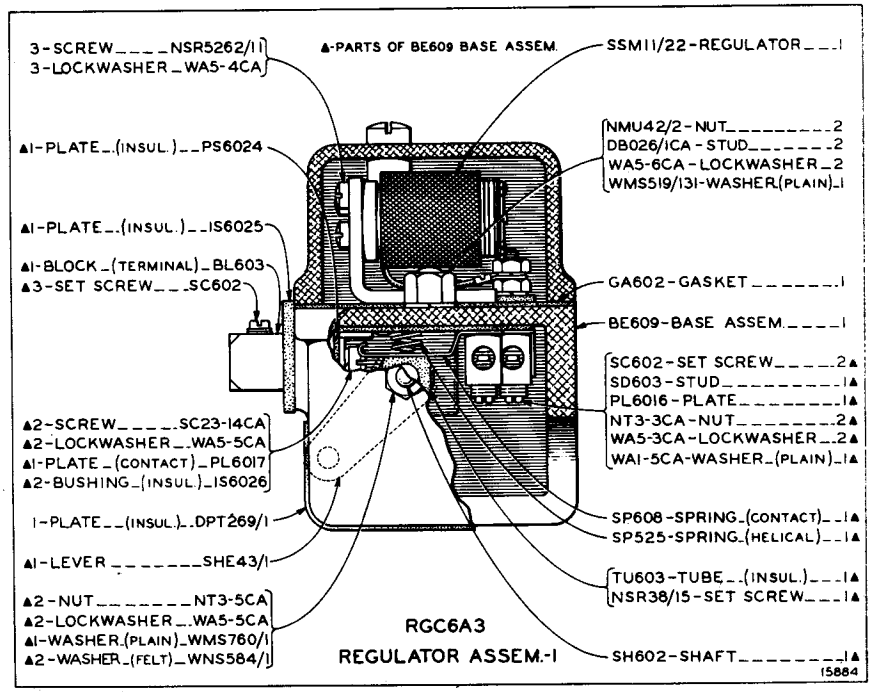


RGC6A3 REGULATOR ASSEMBLY

NUMBERS SHOWN ARE MANUFACTURERS, NOT "CATERPILLAR" PART NUMBERS, EXCEPT WHEN SPECIFIED.

# BOSCH GENERATOR ARJF $\frac{75}{6}$ 900 A12 (Clockwise)

Manufacturer
UNITED AMERICAN BOSCH CORPORATION
Springfield, Massachusetts

For Parts Service on this Generator, Order from the Manufacturer or his Representative




"CATERPILLAR" No. 7B8347 (Clockwise)

NOTE: RGC6A1 Regulator Assem. parts are shown on back of page 409.

NUMBERS SHOWN ARE MANUFACTURERS, NOT "CATERPILLAR" PART NUMBERS, EXCEPT WHEN SPECIFIED.

Form 1736 Printed in U. S. A. Issue 1 1-15-41

# BOSCH GENERATOR
## ARKF $\frac{130}{6}$ 900 A12 (Clockwise)

Manufacturer
UNITED AMERICAN BOSCH CORPORATION
Springfield, Massachusetts

For Parts Service on this Generator, Order from the Manufacturer or his Representative

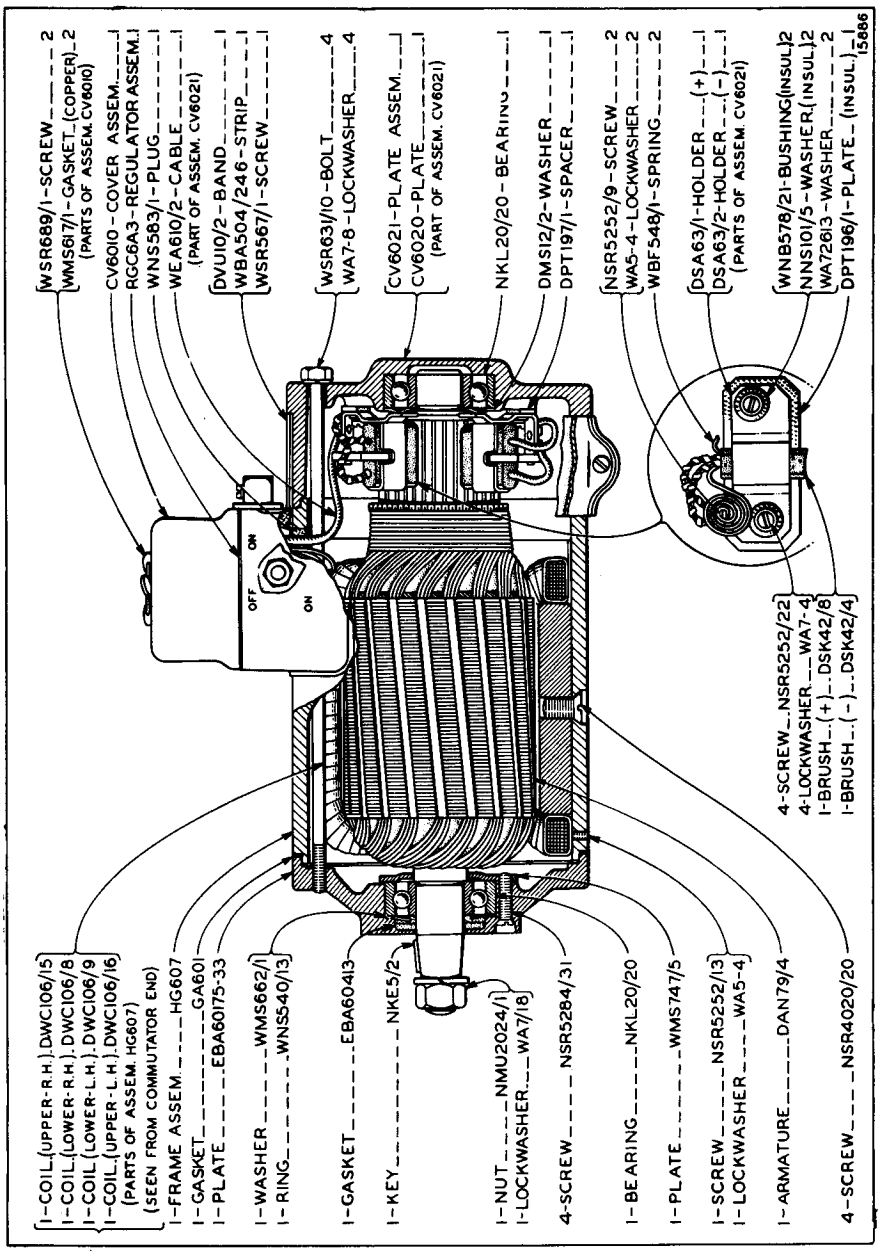


"CATERPILLAR" NO. 7B8348 (Clockwise

NOTE: RGC6A3 Regulator Assem. parts are shown on back of page 410.

NUMBERS SHOWN ARE MANUFACTURERS, NOT "CATERPILLAR" PART NUMBERS, EXCEPT WHEN SPECIFIED.

Form 1736 Printed in U. S. A. Issue 1 2-1-41

# LEECE-NEVILLE GENERATOR TYPE 2153G

Manufacturer
**LEECE-NEVILLE COMPANY**
5363 Hamilton Avenue N.E.
Cleveland, Ohio

For Parts Service on this Generator, Order from the Manufacturer or his Representative

Form 1736 Printed in U.S.A. Issue 1 4-1-41

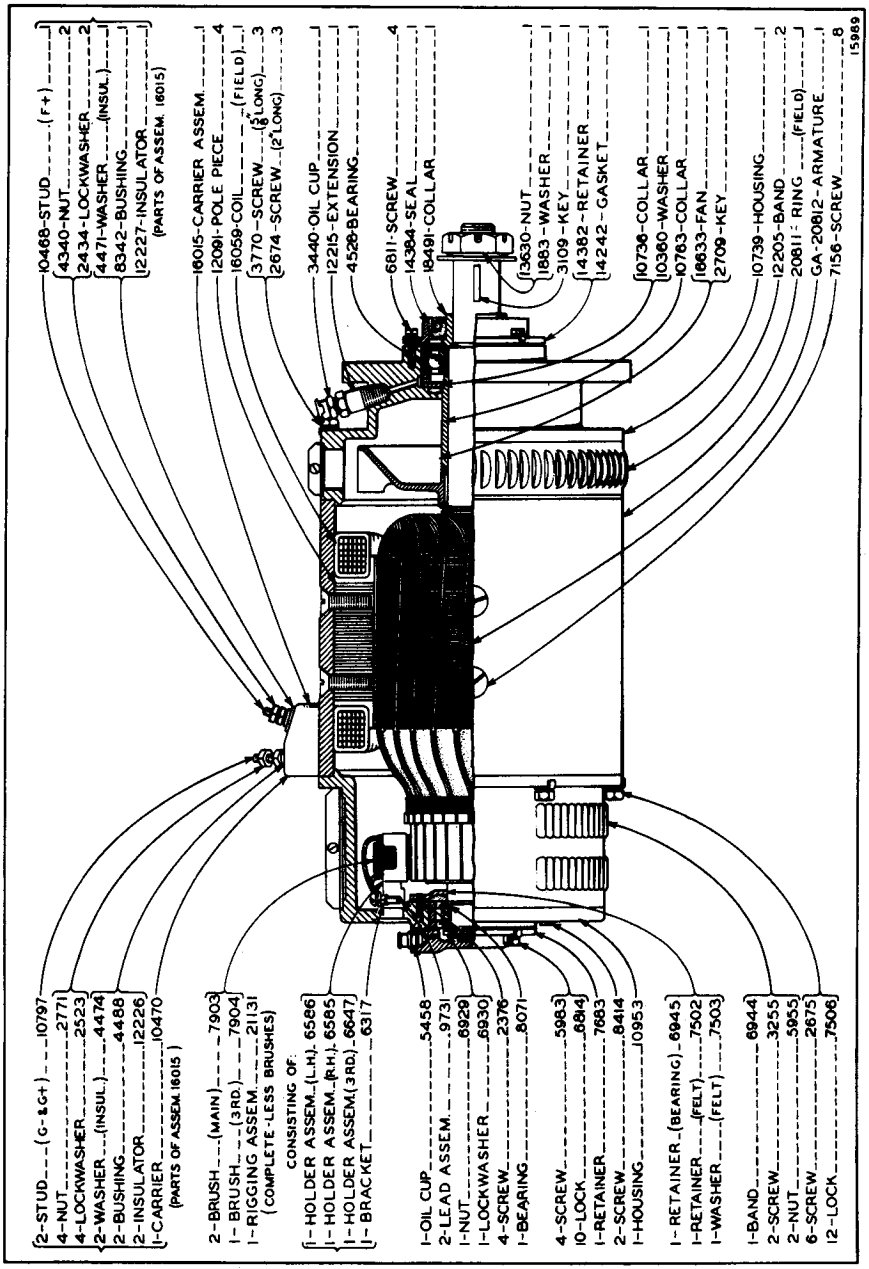


"CATERPILLAR" NO. 7B6911

NUMBERS SHOWN ARE MANUFACTURERS, NOT "CATERPILLAR" PART NUMBERS, EXCEPT WHEN SPECIFIED.

# DELCO-REMY REGULATOR MODEL 5830

Manufacturer
DELCO-REMY DIVISION
General Motors Corporation
Anderson, Indiana

For Parts Service on this Regulator, Order from the Manufacturer or his Representative

Form 1736 Printed in U. S. A. Issue 1 2-1-41

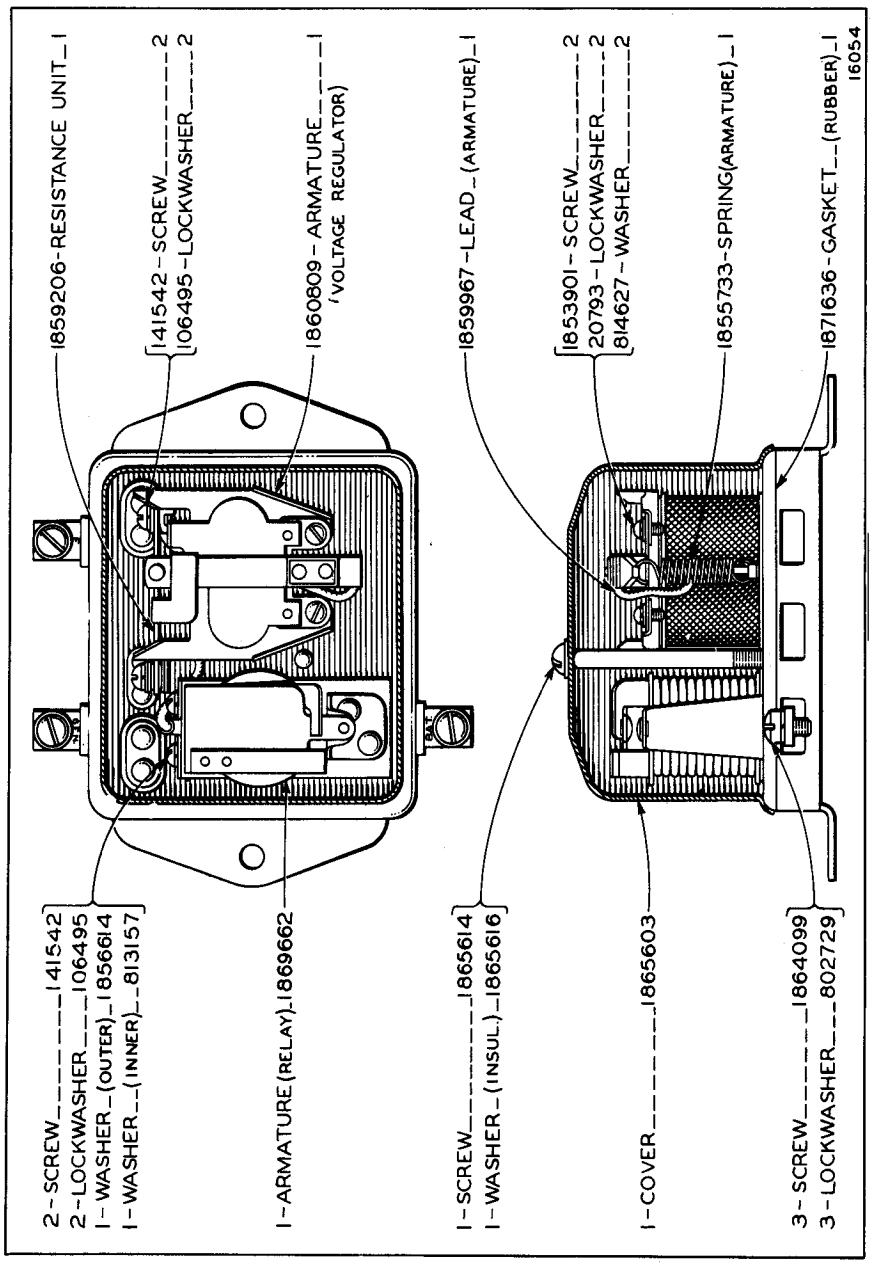


"CATERPILLAR" NO. 8B1430.

NUMBERS SHOWN ARE MANUFACTURERS, NOT "CATERPILLAR" PART NUMBERS, EXCEPT WHEN SPECIFIED.

# DELCO-REMY GENERATOR MODEL 1106256

Manufacturer
DELCO-REMY DIVISION
General Motors Corporation
Anderson, Indiana

For Parts Service on this Generator, Order from the Manufacturer or his Representative

Form 1736 Printed in U. S. A. Issue 1 2-1-41




"CATERPILLAR" NO. 8B1431

NUMBERS SHOWN ARE MANUFACTURERS, NOT "CATERPILLAR" PART NUMBERS, EXCEPT WHEN SPECIFIED.

# LEECE-NEVILLE PULL SWITCH
# TYPE 116-SS

Manufacturer
LEECE-NEVILLE COMPANY
5363 Hamilton Avenue N. E.
Cleveland, Ohio

For Parts Service on this Switch, Order from the Manufacturer or his Representative

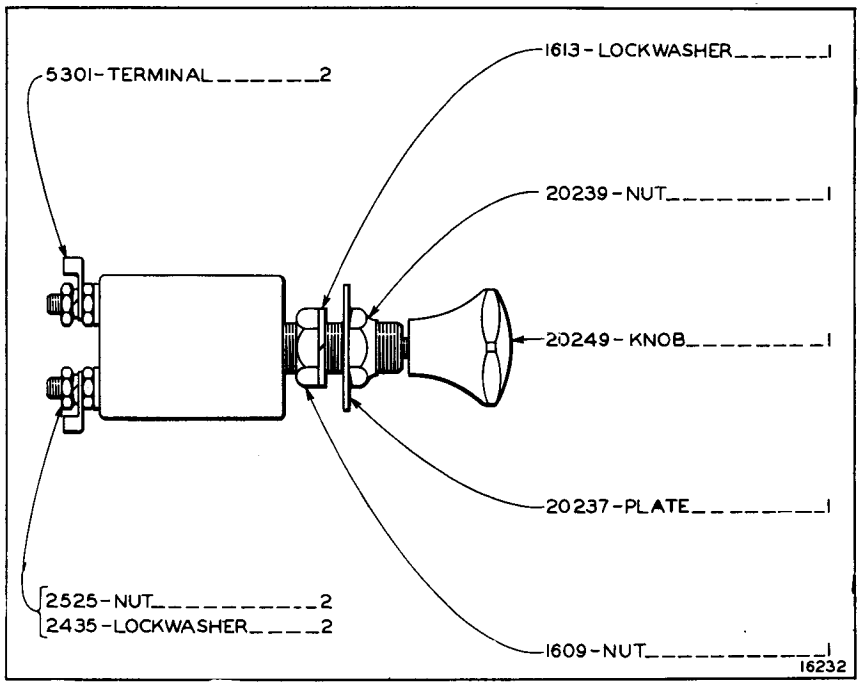


"CATERPILLAR" NO. 5B9450

Form 1736 Printed in U. S. A. Issue 1 2-1-41

NUMBERS SHOWN ARE MANUFACTURERS, NOT "CATERPILLAR" PART NUMBERS, EXCEPT WHEN SPECIFIED.

# LEECE-NEVILLE STARTING MOTOR SWITCH TYPE 26-MS-32

Manufacturer
**LEECE-NEVILLE** Company
5363 Hamilton Avenue N. E.
Cleveland, Ohio

For Parts Service on this Switch, Order from the Manufacturer or his Representative

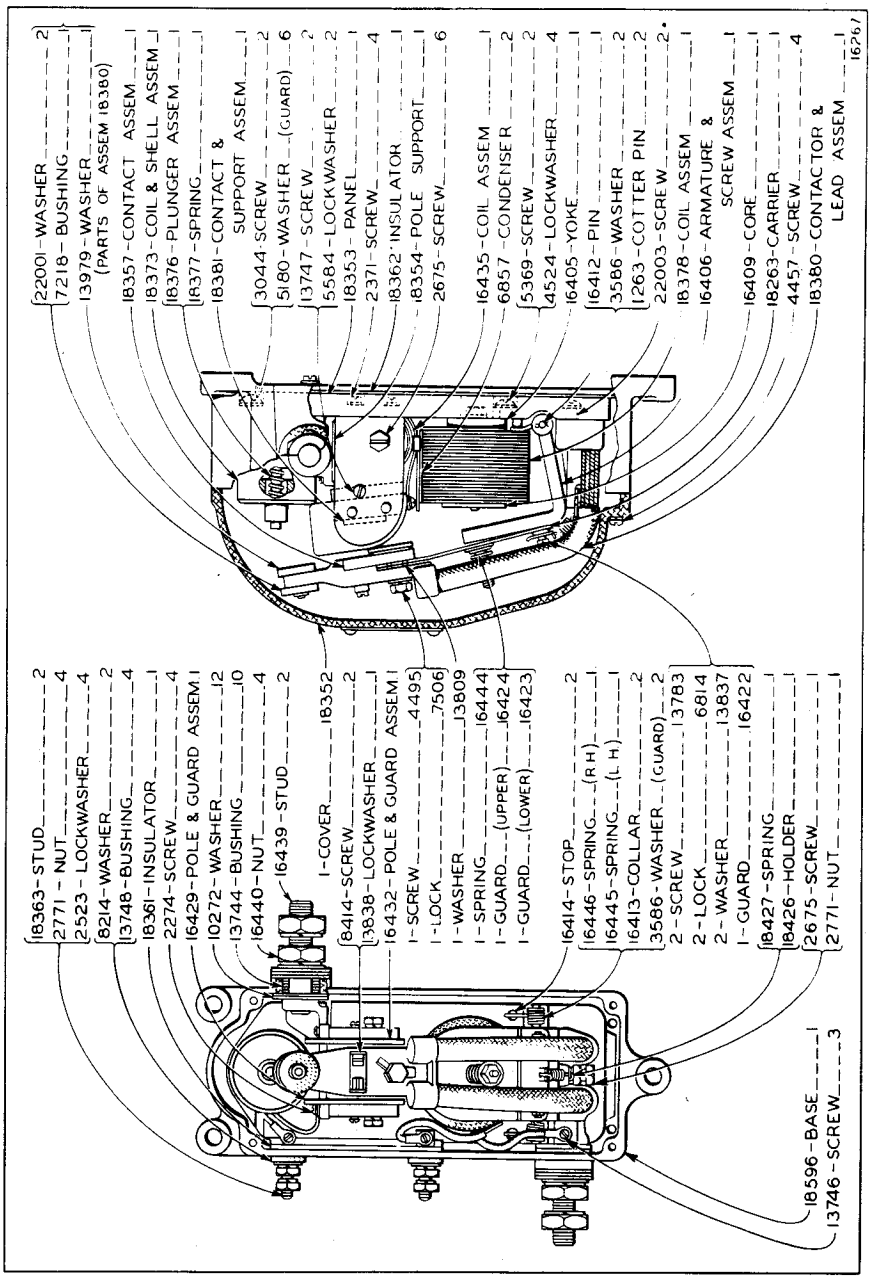


"CATERPILLAR" NO. 6B2189

NUMBERS SHOWN ARE MANUFACTURERS, NOT "CATERPILLAR" PART NUMBERS, EXCEPT WHEN SPECIFIED.

Form 1736 Printed in U.S.A. Issue 1 4-1-41

# DELCO-REMY GENERATOR MODEL 1102675

Manufacturer
DELCO-REMY DIVISION
General Motors Corporation
Anderson, Indiana

For Parts Service on this Generator, Order from the United Motors Service Corp. or their Representative

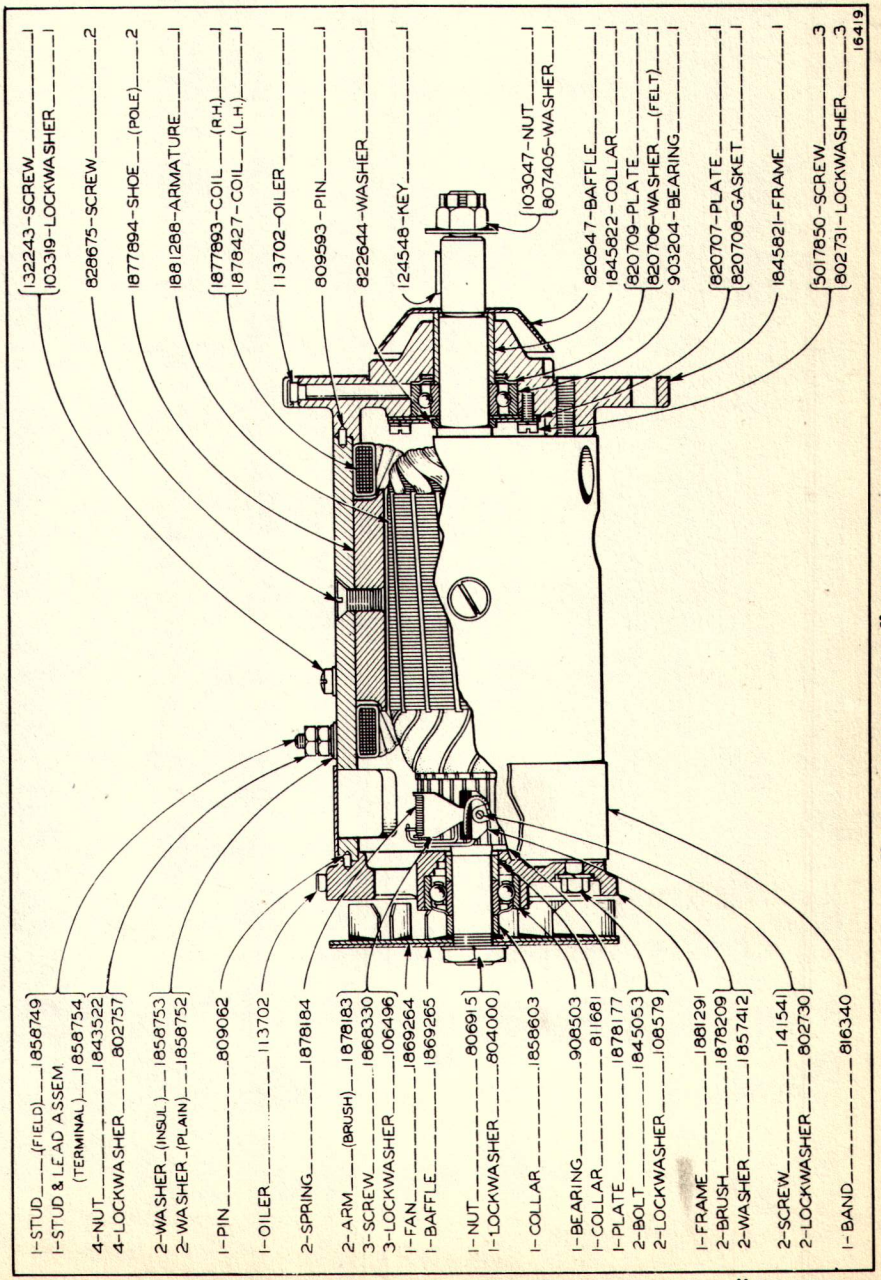


"CATERPILLAR" NO. 8B5536

NUMBERS SHOWN ARE MANUFACTURERS, NOT "CATERPILLAR" PART NUMBERS, EXCEPT WHEN SPECIFIED.

Form 1736 Printed in U. S. A. Issue 1 8-15-41

# ZENITH CARBURETOR - MODEL TU4C-No. 8431D

Manufacturer
ZENITH CARBURETOR DIVISION
BENDIX AVIATION CORPORATION
696 Hart Avenue
Detroit, Michigan

For Parts Service on this Carburetor, Order from the Manufacturer or his Representative

Form 1736 Printed in U. S. A. Issue 1 5-15-41

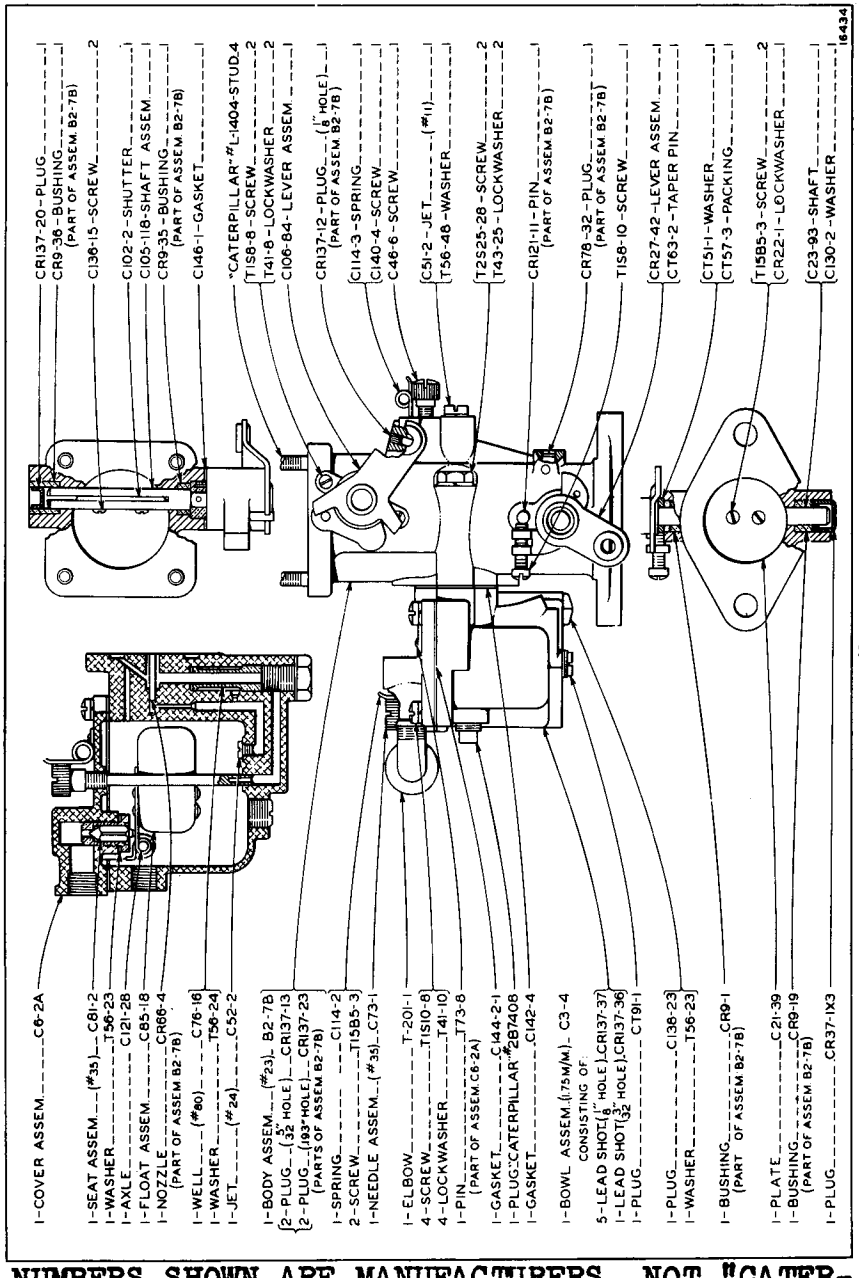


"CATERPILLAR" NO. 7B3776

NUMBERS SHOWN ARE MANUFACTURERS, NOT "CATERPILLAR" PART NUMBERS, EXCEPT WHEN SPECIFIED.

# LEECE-NEVILLE REGULATOR TYPE 2000-R

Manufacturer
LEECE-NEVILLE COMPANY
5363 Hamilton Avenue N.E.
Cleveland, Ohio

For Parts Service on this Regulator, Order from the Manufacturer or his Representative

Form 1736 Printed in U.S.A. Issue 1 5-15-41

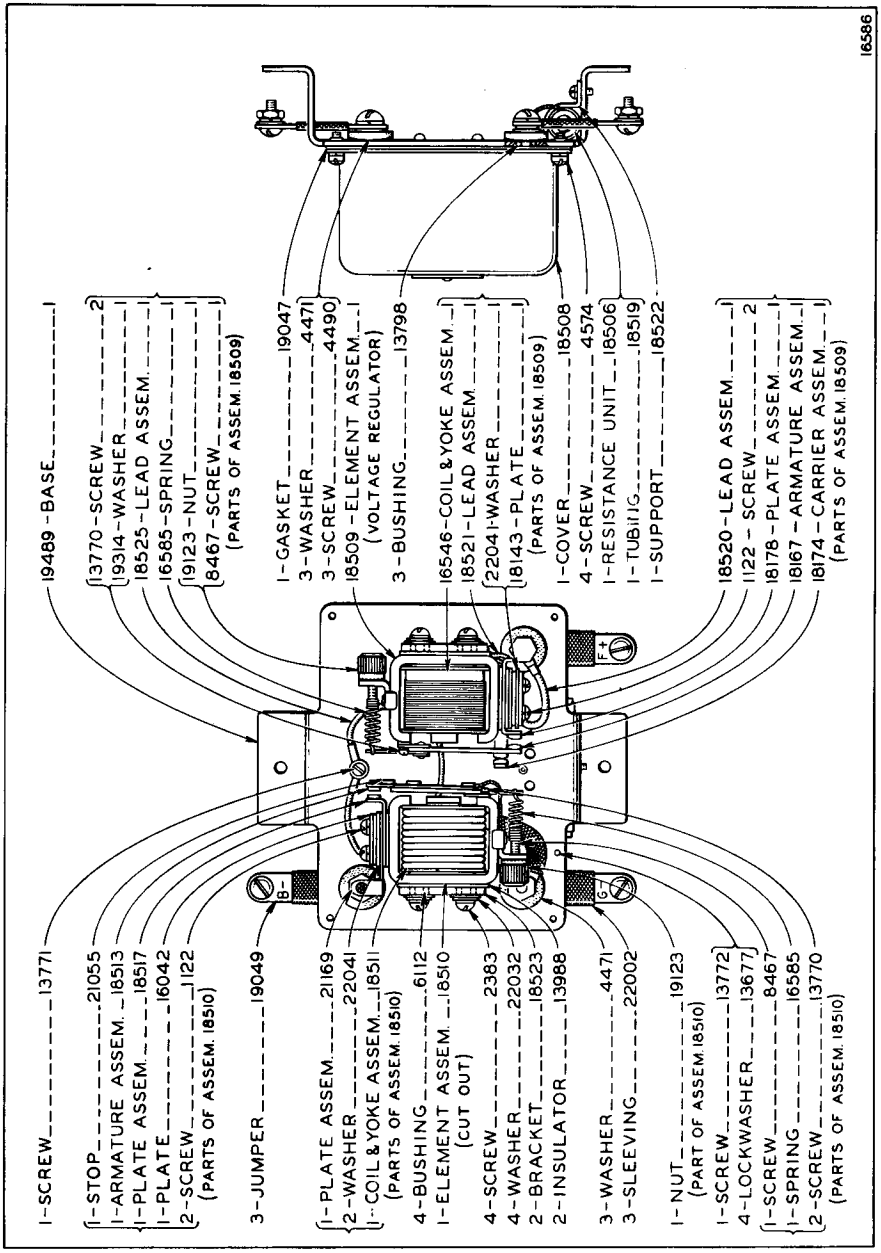


"CATERPILLAR" NO. 8B5841

NUMBERS SHOWN ARE MANUFACTURERS, NOT "CATERPILLAR" PART NUMBERS, EXCEPT WHEN SPECIFIED.

# LEECE-NEVILLE GENERATOR TYPE 2065-G

Manufacturer
**LEECE-NEVILLE COMPANY**
5363 Hamilton Avenue N.E.
Cleveland, Ohio

For Parts Service on this Generator, Order from the Manufacturer or his Representative

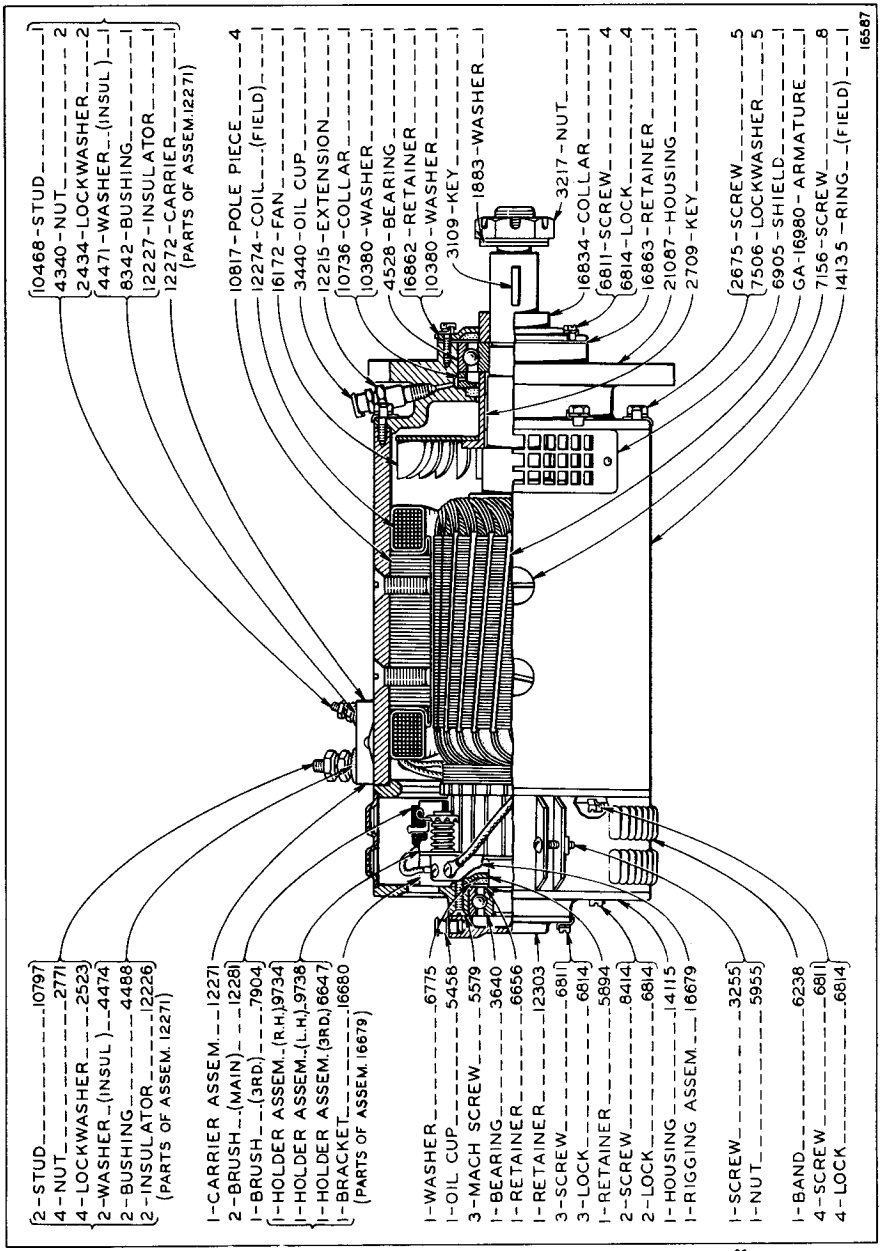


"CATERPILLAR" NO. 7B6912

**NUMBERS SHOWN ARE MANUFACTURERS, NOT "CATERPILLAR" PART NUMBERS, EXCEPT WHEN SPECIFIED.**

Form 1736 Printed in U.S.A. Issue 1 5-15-41

# SCHWITZER-CUMMINS FAN BRACKET ASSEM.

## No. 104243

Manufacturer
SCHWITZER CUMMINS CO.
1125-1229 Massachusetts Ave.
Indianapolis. Indiana

For Parts Service on this Bracket Order from the Caterpillar Tractor Co., Peoria, Illinois

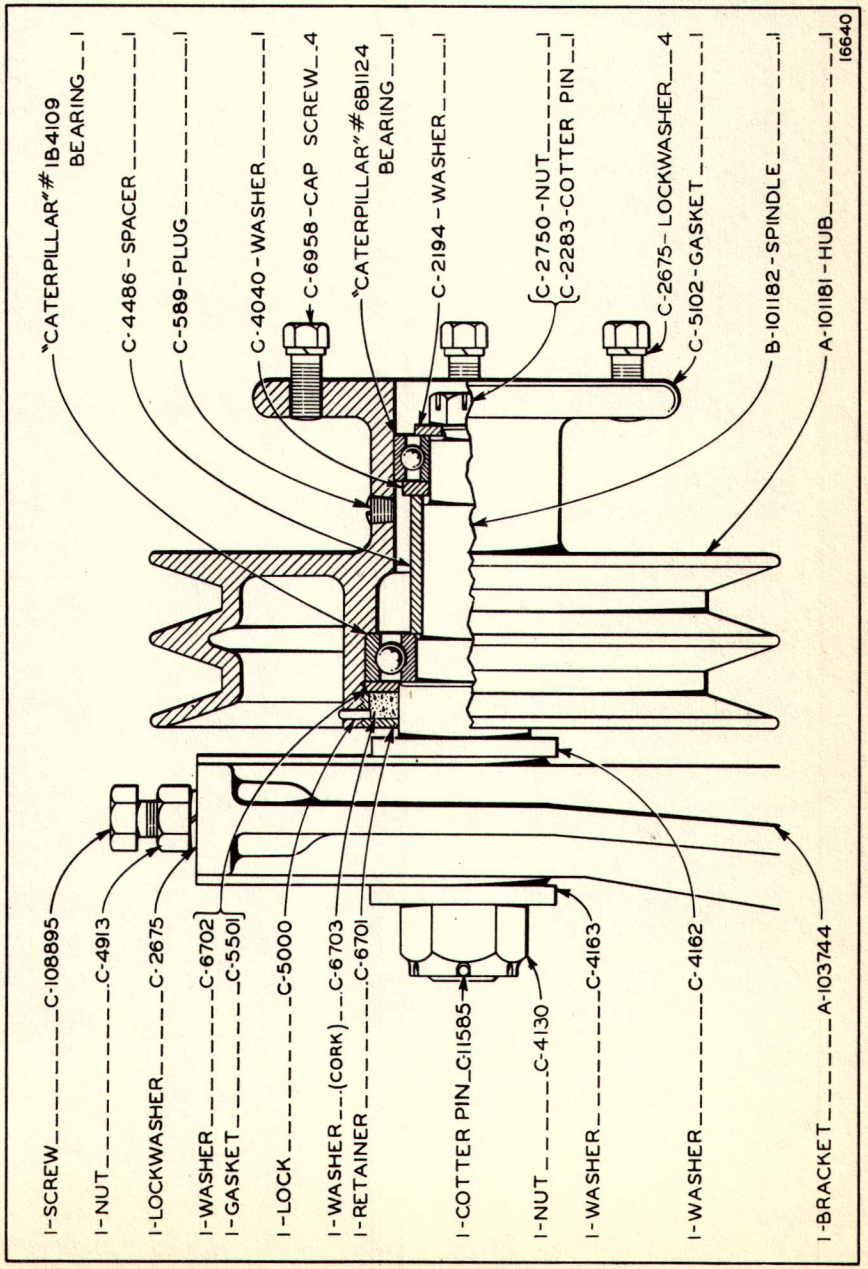


"CATERPILLAR" NO. 3B9816

NUMBERS SHOWN ARE MANUFACTURERS, NOT "CATERPILLAR" PART NUMBERS, EXCEPT WHEN SPECIFIED.

Form 1736 Printed in U. S. A. Issue 1 8-15-41

Form 1736 Printed in U. S. A. Issue 1 8-15-41

# ZENITH CARBURETOR - MODEL K5A-No. 9844

Manufacturer
ZENITH CARBURETOR DIVISION
BENDIX AVIATION CORPORATION
696 Hart Avenue
Detroit, Michigan

For Parts Service on this Carburetor, Order from the Manufacturer or his Representative




"CATERPILLAR" NO. 8B7316

NUMBERS SHOWN ARE MANUFACTURERS, NOT "CATERPILLAR" PART NUMBERS, EXCEPT WHEN SPECIFIED.

Form 1736 Printed in U. S. A. Issue 1 8-15-41

# DELCO-REMY STARTING MOTOR
# MODEL 1108915

Manufacturer
DELCO-REMY DIVISION
General Motors Corporation
Anderson, Indiana

For Parts Service on this Starter, Order from the United Motors Service Corp. or their Representative

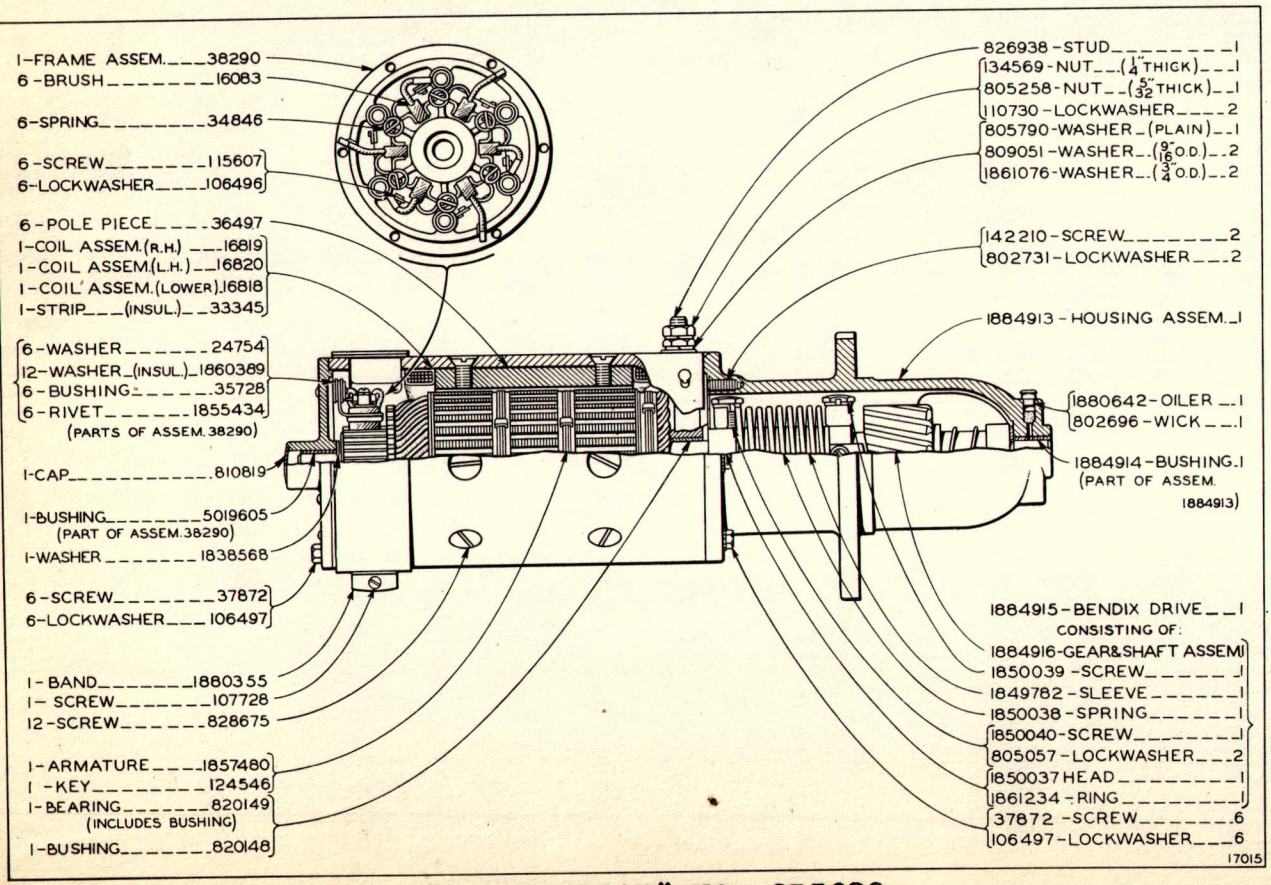


"CATERPILLAR" NO. 8B3029

NUMBERS SHOWN ARE MANUFACTURERS, NOT "CATERPILLAR" PART NUMBERS, EXCEPT WHEN SPECIFIED.

# "Caterpillar" Standards

WHEREVER parts are needed for replacements on "Caterpillar" machines, none but genuine "Caterpillar" parts identified by part numbers should be furnished by you to your customer. All "Caterpillar" bolts are heat treated—some of them are made from special specification alloy steel and then heat treated—in every instance their tensile strength has been increased far beyond the accepted standard for ordinary bolts. Do not jeopardize the operation of a "Caterpillar" machine by substituting something "just as good."

Printed in U. S. A.

Form 1632

# CATERPILLAR STANDARDS

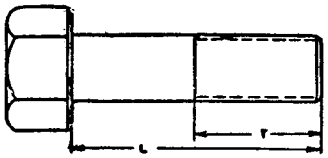


## BOLTS AND CAP SCREWS



| 1/4-20 N.C. | | | 1/4-28 N.F. | | | 5/16-18 N.C. | | | 5/16-24 N.F. | | | 3/8-16 N.C. | | | 3/8-24 N.F. | | |
|---|---|---|---|---|---|---|---|---|---|---|---|---|---|---|---|---|---|
| L | T | Part No. | L | T | Part No. | L | T | Part No. | L | T | Part No. | L | T | Part No. | L | T | Part No. |
| 3/8 | 9/32 | S-1613 | 1/2 | 3/8 | 50798 | 3/8 | 5/16 | B-482 | 9/16 | 3/8 | B-386 | 7/16 | 11/32 | S-1202 | 1/2 | 3/8 | L-1138 |
| 1/2 | 3/8 | S-1614 | 5/8 | 5/16 | S-1570 | 1/2 | 7/16 | 1C569 | 3/4 | 5/8 | 1A2343 | 5/8 | 17/32 | T-102 | 5/8 | 1/2 | T-642 |
| 5/8 | 1/2 | 2A762 | 3/4 | 5/8 | T-284 | 11/16 | 19/32 | 1A9136 | 7/8 | 3/4 | 4B9883 | 3/4 | 5/8 | S-509 | 3/4 | 11/16 | L-472 |
| 3/4 | 9/16 | S-1615 | 7/8 | 1/2 | L-1340 | 3/4 | 9/16 | S-1617 | 1 | 3/4 | 52557 | 7/8 | 3/4 | L-1351 | 7/8 | 3/4 | T-703 |
| 3/4 | 3/8 | 1B7356 | 1 | 5/8 | S-1597 | 7/8 | 5/8 | 2B2695 | 1 1/16 | 9/16 | 2A4172 | 1 | 3/4 | S-1594 | 1 | 9/16 | S-1581 |
| 1 | 3/4 | S-1616 | 1 1/8 | 9/16 | L-1590 | 1 | 3/4 | S-1618 | 1 1/8 | 15/32 | B-20 | 1 | 3/4 | S-1628* | 1 | 13/16 | 52836 |
| 1 1/4 | 5/8 | 2A758 | 1 1/4 | 5/8 | S-1598 | 1 1/8 | 7/8 | 4B3388 | 1 1/4 | 3/4 | 1B1293 | 1 1/8 | 15/16 | 1A2029 | 1 | 15/16 | 8B42 |
| 1 1/4 | 1 | 50520 | 1 1/4 | 1 1/8 | 4B2152 | 1 1/4 | 3/4 | 1B7182 | 1 3/8 | 1/2 | 2A1371 | 1 1/4 | 3/4 | 2B9484 | 1 1/8 | 7/8 | 5B2208 |
| 1 1/4 | 1 1/8 | 7B2742 | 1 1/2 | 3/4 | 50802 | 1 3/8 | 3/4 | 1B2790 | 1 1/2 | 3/4 | 1B581 | 1 1/4 | 1 3/16 | V-196 | 1 1/4 | 1 | 1A2209 |
| 1 3/8 | 5/8 | 2A5546 | 2 | 3/4 | 4B8701 | 1 1/2 | 1 13/32 | 1A9579 | 1 7/8 | 1 1/8 | 4B1568 | 1 1/4 | 15/16 | S-1588 | 1 1/4 | 19/32 | S-1582 |
| 1 1/2 | 5/8 | 2A3750 | 2 1/4 | 5/8 | 2B8593 | 1 1/2 | 3/4 | 1B2719 | 2 1/8 | 23/32 | 1A2681 | 1 3/8 | 1 | 3B1915 | 1 1/2 | 5/8 | 2A4996 |
| 1 5/8 | 5/8 | 7B8167 | 2 1/2 | 1 | 1A9919 | 1 3/4 | 3/4 | 1B9575 | 2 1/4 | 3/4 | 1A3543 | 1 1/2 | 1 1/8 | S-1591 | 1 1/2 | 1 | T-924 |
| 1 3/4 | 5/8 | 1B2713 | 2 5/8 | 3/4 | 8B4199 | 1 3/4 | 1 5/16 | 50532 | 2 3/4 | 5/8 | 4B1028 | 1 5/8 | 3/4 | 2A4639 | 1 1/2 | 19/32 | S-1580 |
| 2 | 7/8 | 8B2377 | | | | 2 | 3/4 | 2B2694 | 3 1/4 | 3/4 | 119697 | 1 3/4 | 7/8 | S-1571 | 1 3/4 | 13/16 | L-478 |
| 2 1/8 | 5/8 | 8B3815 | | | | 2 1/8 | 1 7/8 | 5B5620 | 7 3/4 | 1 7/8 | 6B9855 | 1 3/4 | 1 5/16 | 50542 | 1 7/8 | 13/16 | 61266 |
| 2 1/4 | 7/8 | 1D4533 | | | | 2 1/4 | 7/8 | 1D4538 | 9 3/4 | 7/8 | L-1947 | 1 7/8 | 13/16 | 1C2251 | 1 7/8 | 1 3/4 | T-627 |
| 2 3/8 | 5/8 | 6B2265 | | | | 2 1/2 | 7/8 | 1D4539 | | | | 2 | 1/2 | 50543 | 2 | 7/8 | S-1748 |
| 2 1/2 | 5/8 | 1B2714 | | | | 2 3/4 | 7/8 | 1D4540 | | | | 2 | 13/16 | S-1590 | 2 | 1 7/8 | L-851 |
| 2 1/2 | 1 7/8 | 50525 | | | | 3 | 7/8 | 1D4541 | | | | 2 1/4 | 1 | L-2070 | 2 1/4 | 3/4 | L-639 |
| 2 5/8 | 5/8 | 2F838 | | | | 3 1/4 | 1 | 4B831 | | | | 2 1/4 | 1 11/16 | 58031 | 2 1/4 | 2 1/8 | 1A1332 |
| 2 3/4 | 5/8 | T-236 | | | | 4 | 1 | 4B3903 | | | | 2 1/4 | 7/8 | 5B213 | 2 1/2 | 2 3/8 | 1A1333 |
| 2 7/8 | 7/8 | 4B8584 | | | | | | | | | | 2 1/2 | 3/4 | L-1143 | 2 1/2 | 1 | L-1648 |
| 3 | 1 | 4B9365 | | | | | | | | | | 2 5/8 | 5/8 | V-352 | 2 3/4 | 13/16 | L-139 |
| 3 1/8 | 5/8 | 2A5545 | | | | | | | | | | 2 3/4 | 1 | T-573 | 3 | 1 | 52844 |
| 3 1/2 | 5/8 | 3B8695 | | | | | | | | | | 3 | 3/4 | S-1619 | 3 1/4 | 13/16 | S-1605 |
| 4 5/16 | 1 | 6B4198 | | | | | | | | | | 3 1/4 | 7/8 | L-1352 | 3 1/2 | 1 1/16 | 5B826 |
| 5 | 5/8 | 1B2716 | | | | | | | | | | 3 1/2 | 1 | T-65 | 3 3/4 | 1 1/4 | 1B3680 |
| 5 1/2 | 5/8 | 1B2717 | | | | | | | | | | 3 1/2 | 2 5/8 | 50074 | 4 | 13/16 | T-513 |
| 6 | 3/4 | 1B2718 | | | | | | | | | | 3 1/2 | 3 3/8 | 5B4274 | 4 1/4 | 13/16 | 1B5082 |
| | | | | | | | | | | | | 3 1/4 | 1 1/4 | S-1608 | 4 11/16 | 11/16 | 6B3591 |
| | | | | | | | | | | | | 4 | 1 | 3373-A | 5 | 4 7/8 | 1B2339 |
| | | | | | | | | | | | | 4 1/4 | 5/8 | T-55 | 5 | 13/16 | 1A2116 |
| | | | | | | | | | | | | 4 1/2 | 1 1/4 | 1A5964 | 5 1/2 | 7/8 | 5B6579 |
| | | | | | | | | | | | | 4 3/4 | 13/16 | 1A5183 | 8 1/2 | 1 3/8 | 1B1284 |
| | | | | | | | | | | | | 4 3/4 | 2 3/8 | 52328 | 9 1/2 | 1 1/8 | S-2255 |
| | | | | | | | | | | | | 5 | 1 | 5B9603 | | | |
| | | | | | | | | | | | | 5 | 1 1/8 | 1D4705 | | | |
| | | | | | | | | | | | | 5 1/4 | 7/8 | 5B2638 | | | |
| | | | | | | | | | | | | 5 3/4 | 1 1/4 | 1B9356 | | | |
| | | | | | | | | | | | | 6 | 1 1/4 | 1D4706 | | | |
| | | | | | | | | | | | | 6 3/16 | 13/16 | 4B391 | | | |
| | | | | | | | | | | | | 6 1/2 | 1 1/8 | 1B9045 | | | |
| | | | | | | | | | | | | 6 9/16 | 3/4 | 2A1481 | | | |
| | | | | | | | | | | | | 6 3/4 | 7/8 | 5B291 | | | |
| | | | | | | | | | | | | 7 | 1 | 50058 | | | |
| | | | | | | | | | | | | 7 1/2 | 1 | 6B1557 | | | |
| | | | | | | | | | | | | 7 13/16 | 13/16 | 2A2818 | | | |
| | | | | | | | | | | | | 9 3/4 | 1 | 50057 | | | |

* Slotted Head

# CATERPILLAR STANDARDS

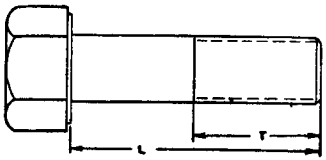


## BOLTS AND CAP SCREWS



| 7/16-14 N.C. | | | 7/16-20 N.F. | | | 1/2-13 N.C. | | | 1/2-20 N.F. | | | 5/8-11 N.C. | | | 5/8-18 N.F. | | |
|---|---|---|---|---|---|---|---|---|---|---|---|---|---|---|---|---|---|
| L | T | Part No. | L | T | Part No. | L | T | Part No. | L | T | Part No. | L | T | Part No. | L | T | Part No. |
| 1 | 11/16 | T-318 | 1 | 7/8 | T-840 | 3/4 | 9/16 | S-1620 | 3/4 | 5/8 | 1B5103* | 9/16 | 13/32 | 2B9128 | 1 1/4 | 15/16 | 1A4273 |
| 1 1/4 | 15/16 | 7B5385 | 1 | 7/8 | T-244 | 1 | 13/16 | S-1621 | 3/4 | 5/8 | 52859 | 3/4 | 19/32 | 1A9510 | 1 1/2 | 7/8 | L-1154 |
| 1 1/4 | 1 1/8 | T-320 | 1 5/16 | 11/16 | T-921 | 1 1/4 | 15/16 | S-1595 | 7/8 | 3/4 | T-598 | 1 | 3/4 | S-1624 | 1 1/2 | 1 1/4 | 1B623 |
| 1 1/2 | 15/16 | T-772 | 1 9/16 | 7/8 | 2B5484 | 1 1/4 | 1 | 4B3823 | 1 | 7/8 | S-1629 | 1 1/4 | 15/16 | S-1592 | 1 3/4 | 1 1/8 | 5B841 |
| 1 3/4 | 15/16 | T-768 | 1 3/4 | 3/4 | 1A4350 | 1 3/8 | 15/16 | 7B3235 | *1 1/8 | 15/16 | 2B9125 | 1 3/8 | 3/8 | 4B4043 | 1 3/4 | 7/8 | S-1578 |
| 2 | 1 1/8 | T-319 | 2 | 7/8 | T-489 | 1 1/2 | 1 1/4 | 4B900 | 1 1/4 | 1 | S-1593 | 1 1/2 | 15/16 | S-1566 | 2 | 1 | S-1576 |
| 2 1/4 | 7/8 | 1D4707 | 2 1/2 | 15/16 | 1B572 | 1 1/2 | 1 1/16 | S-1585 | 1 1/4 | 1 1/16 | 2B3786 | 1 5/8 | 1 3/16 | 7B1115 | 2 1/8 | 15/16 | S-1565 |
| 2 1/2 | 1 | 1D4703 | | | | 1 3/4 | 29/32 | 1A2469 | 1 1/2 | 1 | S-1603 | 1 3/4 | 1 5/16 | S-1589 | 2 1/4 | 1 | S-1577 |
| 2 3/4 | 1 | 1D4556 | | | | 1 3/4 | 1 5/16 | S-1587 | 1 1/2 | 13/16 | S-2457 | 1 3/4 | 1 1/8 | 1B3590* | 2 3/8 | 1 3/16 | 1A1493 |
| 3 1/4 | 1 | 3B8428 | | | | 1 3/4 | 1 | S-1476 | 1 9/16 | 3/4 | 1B7482 | 2 | 1 1/2 | 1A-1135 | 2 1/2 | 1 3/16 | S-1600 |
| 4 1/2 | 3 1/4 | 4B7220 | | | | 1 7/8 | 29/32 | 3269-A | 1 3/4 | 13/16 | S-1584 | 2 | 1 1/16 | S-1572 | 2 5/8 | 1 3/16 | 362-A |
| 5 | 1 1/4 | 5B5059 | | | | 2 | 3/4 | 2A1624 | 1 7/8 | 15/16 | 2A3223 | 2 1/4 | 1 1/8 | 3506-A | 2 3/4 | 1 3/16 | S-1601 |
| | | | | | | 2 | 1 | 1A1460 | 2 | 3/4 | S-1579 | 2 1/2 | 1 7/8 | S-1625 | 3 | 1 | W-131 |
| | | | | | | 2 | 1 1/2 | S-1622 | 2 | 1 | 52864 | 2 3/4 | 1 1/2 | 1A8537 | 3 | 1/2 | 2B4989 |
| | | | | | | 2 | 1 15/16 | T-352 | 2 1/4 | 1 5/16 | 1B1295 | 2 3/4 | 2 1/4 | 7B2725 | 3 1/4 | 1 | S-2318 |
| | | | | | | 2 1/4 | 15/16 | S-1574 | 2 1/4 | 1 | S-484 | 3 | 1 3/16 | 1B4367 | 3 3/8 | 7/8 | 2B4705† |
| | | | | | | 2 1/4 | 1 1/4 | 2B947 | 2 5/16 | 2 3/16 | 1A6306 | 3 1/4 | 1 1/2 | 1D4585 | 3 1/2 | 1 3/16 | S-1602 |
| | | | | | | 2 1/2 | 1 | 3322-A | 2 1/2 | 1 | S-1604 | 3 1/4 | 2 | AL-458 | 3 3/4 | 1 3/4 | S-2353 |
| | | | | | | 2 1/2 | 2 1/16 | 1B1112 | 2 1/2 | 5/8 | 2A311- | 3 1/2 | 1 1/2 | 1D4586 | 3 3/4 | 3 9/16 | 2A3974 |
| | | | | | | 2 3/4 | 1 | 1A5822 | 2 1/2 | 1 3/8 | 351-D | 3 1/2 | 3 | 1A1090 | 3 15/16 | 7/8 | 7B6514† |
| | | | | | | 3 | 1 1/4 | L-1329 | 2 3/4 | 1 | S-1599 | 3 3/4 | 1 1/4 | L-1169 | 4 | 1 1/16 | V-459 |
| | | | | | | 3 | 2 1/4 | S-1623 | 2 3/4 | 2 5/8 | T-281 | 4 | 1 3/16 | S-1569 | 4 1/4 | 1 1/16 | V-523 |
| | | | | | | 3 1/4 | 2 | V-375 | 3 | 1 | L-1732 | 4 1/4 | 1 1/2 | 1D4588 | 4 1/2 | 1 3/16 | T-857 |
| | | | | | | 3 3/8 | 1 | 1C1414 | 3 | 1 1/2 | 11193 | 4 3/8 | 1 5/16 | 2A1132 | 4 3/4 | 1 3/16 | 1A3203 |
| | | | | | | 3 1/2 | 1 1/8 | 1D4566 | 3 1/16 | 1 | L-1662 | 4 1/2 | 1 1/2 | 1A8651 | 4 7/8 | 1 3/16 | 8B1158† |
| | | | | | | 3 1/2 | 2 5/8 | 58039 | 3 1/4 | 1 | L-1558 | 4 3/4 | 1 1/2 | 1D4590 | 5 | 2 | 21889 |
| | | | | | | 3 3/4 | 1 | 1B2886 | 3 1/2 | 1 | L-2315 | 5 | 1 1/4 | 1A5405 | 5 1/4 | 1 3/4 | 2B7133 |
| | | | | | | 4 | 1 | S-1573 | 3 1/2 | 1 3/4 | 3B6985 | 5 1/4 | 1 1/2 | 1D4592 | 5 1/2 | 1 1/2 | 2A2814 |
| | | | | | | 4 | 2 5/8 | 3293-A | 3 3/4 | 1 | 1A1952 | 5 1/2 | 1 1/2 | 1D4593 | 5 1/2 | 4 | 1B7538 |
| | | | | | | 4 1/4 | 1 1/4 | 1D4569 | 3 3/4 | 1 1/4 | 52975 | 5 3/4 | 1 1/2 | 1D4594 | 6 | 1 1/4 | 2B6030 |
| | | | | | | 4 1/2 | 7/8 | 3270-A | 4 | 3/4 | 1B5223 | 6 | 1 1/2 | 1D4595 | 6 3/8 | 1 | W-88 |
| | | | | | | 4 5/8 | 3/4 | 7B9227 | 4 | 1 | L-1559 | 6 1/4 | 1 1/2 | 1D4596 | 7 | 1 1/4 | 1B3623 |
| | | | | | | 4 3/4 | 1 | 2B2006 | 4 1/4 | 1 | 52977 | 6 1/2 | 5 | 1D4597 | 7 1/2 | 1 1/2 | 50107 |
| | | | | | | 5 | 2 1/2 | 50579 | 4 1/4 | 1 | 2A3689 | 6 3/4 | 1 5/8 | 1D4598 | | | |
| | | | | | | 5 | 4 1/8 | 1A8628 | 4 1/2 | 1 1/4 | 1A4920 | 7 | 1 5/8 | 1D4599 | | | |
| | | | | | | 5 1/4 | 1 1/2 | 1B2974 | 4 3/4 | 1 | L-557 | 7 1/2 | 1 5/8 | 1D4600 | | | |
| | | | | | | 5 1/2 | 1 1/2 | 1D4572 | 5 | 1 3/4 | 1B1422 | 8 | 1 3/16 | 1B7709 | | | |
| | | | | | | 5 3/4 | 1 1/4 | 1D4573 | 5 1/4 | 2 | 1A9932 | 8 1/2 | 1 3/4 | 1D4601 | | | |
| | | | | | | 6 | 1 1/4 | 1D4574 | 5 1/4 | 1 | 1A3479 | 9 1/2 | 1 3/4 | 1D4602 | | | |
| | | | | | | 6 1/2 | 1 1/4 | 1D4575 | 8 | 1 1/4 | 1A3967 | 9 3/4 | 1 3/4 | 3B3272 | | | |
| | | | | | | 6 1/2 | 1 | 2A1531 | | | | | | | | | |
| | | | | | | 6 3/4 | 1 3/4 | 1D4576 | | | | | | | | | |
| | | | | | | 7 | 1 | 1A7669 | | | | | | | | | |
| | | | | | | 7 1/2 | 1 | 1A168 | | | | | | | | | |
| | | | | | | 8 1/4 | 1 1/4 | 3B7801 | | | | | | | | | |
| | | | | | | 8 1/2 | 1 | 1B3573 | | | | | | | | | |
| | | | | | | 9 1/4 | 1 | 8B9532 | | | | | | | | | |

| 9/16-12 N.C. | | | 9/16-18 N.F. | | |
|---|---|---|---|---|---|
| L | T | Part No. | L | T | Part No. |
| 1 3/8 | 1 | 4B8519 | 2 1/16 | 1 3/16 | 52982 |
| | | | 2 1/16 | 15/16 | 2F1009 |

*Head 1/4" High. †L. H. Thread.

Printed in U. S. A.

# CATERPILLAR STANDARDS

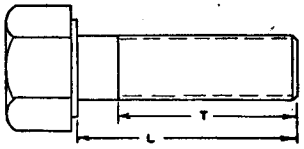


## BOLTS AND CAP SCREWS



| ¾-10 N.C. | | | ¾-16 N.F. | | | ⅞-9 N.C. | | | ⅞-14 N.F. | | | 1-8 N.C. | | | 1-14 N.F. | | |
|---|---|---|---|---|---|---|---|---|---|---|---|---|---|---|---|---|---|
| L | T | Part No. | L | T | Part No. | L | T | Part No. | L | T | Part No. | L | T | Part No. | L | T | Part No. |
| ¾ | 9/16 | 2B1459 | 1¾ | 1⅜ | 1A75 | 1½ | ½ | T-690 | 2¼ | 1½ | 57091 | 1½ | 1 5/16 | V-450 | 1⅝ | 1 1/16 | 9B3175 |
| 1¼ | 15/16 | S-1583 | 2 | 1⅛ | 3306-A | 1¾ | ⅛ | 50139 | 2½ | 1½ | 1D5873 | 2¼ | 1¼ | 3295-A | 3 | 1½ | 6B9194 |
| 1½ | 1⅛ | S-1626 | 2¼ | 1¼ | S-1897 | 1⅞ | 1½ | 2B1587 | 2¾ | 1¼ | S-1596 | 2½ | 1½ | 1D4635 | 3¼ | 2½ | 57108 |
| 1¾ | 1¼ | 1A458 | 2½ | 1⅜ | T-856 | 2 | 1⅜ | S-1973 | 3 | 1½ | 57094 | 2¾ | 1⅝ | 3271-A | 3½ | 1¼ | 3345-A |
| 2 | 1½ | L-1178 | 2½ | 1¾ | 1C1682 | 2¼ | 1½ | 1D5698 | 3 | 2¼ | 8B3609 | 3 | 1¾ | 1D4709 | 3¾ | 1¾ | 3326-A |
| 2⅛ | 1¼ | 1B964 | 2¾ | 9/16 | 2B4999 | 2½ | 1½ | 1D4625 | 3½ | 1 9/16 | 1A224 | 3¼ | 2 | 1D4637 | 4½ | 1¾ | V-269 |
| 2¼ | 1½ | 2A1538 | 2¾ | 1½ | 3305-A | 2¾ | 1½ | 1D4626 | 3¾ | 1 13/16 | L-2090 | 3½ | 2 | 1D4638 | 4¾ | 1¾ | 7B7181 |
| 2½ | 1½ | 1A8063 | 2¾ | 1 7/16 | 2B9513 | 3 | 1¾ | 1D4627 | 4 | 1 9/16 | T-603 | 3⅝ | 2 | 3320-A | 7¼ | 6 | 7B8364 |
| 2¾ | 1½ | 1D4608 | 3 | 1⅛ | S-1575 | 3 | 2⅞ | 1D993 | 4¼ | 1¼ | 1D3848 | 4 | 2 | 1D4639 | | | |
| 3 | 1½ | 1D4609 | 3¼ | 1½ | 55634 | 3½ | 1¾ | 1D4628 | 4⅞ | 1¼ | 7B6583 | 4 | 2 | 6B5091 | | | |
| 3½ | 1½ | 1D4610 | 3¼ | 1¾ | 6B5310 | 3½ | 1¾ | 1D4629 | 5 | 1 15/16 | 1D6089 | 4¼ | 2¼ | 1D4640 | | | |
| 3½ | 1½ | 3B2968 | 3½ | 1¼ | 3311-A | 4 | 2¼ | 1D4630 | 5¼ | 1½ | 6B9487 | 4½ | 2¼ | 1D4641 | | | |
| 3½ | 2⅜ | 50613 | 3¾ | 1⅜ | 1A3103 | 4¼ | 1⅞ | 1D4631 | 5½ | 1 9/16 | S-1606 | 4¾ | 2 | 2A1420 | | | |
| 3½ | 2⅞ | 4B6208 | 4 | 1½ | L-1328 | 4½ | 1¾ | 1A5576 | 6¾ | 1 9/16 | 50153 | 5 | 2 | 1D4642 | | | |
| 4 | 1½ | 1D4612 | 4¼ | 1¼ | 1D3419 | 5 | 1½ | 2839-A | 8 | 1½ | 52549 | 5½ | 2 | 1D4643 | | | |
| 4¼ | 1½ | S-1756 | 4½ | 1 | 3604-A | 5½ | 1⅞ | 1D5859 | 9¾ | 2¼ | 8B3610 | 6 | 5¼ | 1D2345 | | | |
| 4½ | 1⅛ | S-1627 | 4¾ | 1¼ | 7B5163 | 5½ | 1⅞ | 1D4634 | | | | 6¼ | 2 | 4B8862 | | | |
| 4¾ | 1¼ | 3B6753 | 5 | 1⅜ | S-1607 | 6 | 3¾ | 1604-A | | | | 7½ | 2 | 2B7218 | | | |
| 5 | 1¾ | 1D4614 | 5¾ | 1⅜ | 1B1646 | 7 | 1¾ | 1D5976 | | | | 8 | 2¼ | 1D4644 | | | |
| 5½ | 1¾ | 1D4615 | 6 | 1½ | 7B4436 | 8 | 1¾ | 1D6259 | | | | 8½ | 2¼ | 1D4645 | | | |
| 5⅜ | 1½ | 2A1867 | 6¼ | 1 | 2441-A | 9½ | 1¾ | 1D6260 | | | | 9 | 2¼ | 1D4646 | | | |
| 5¾ | 1¾ | 15368 | 6¾ | 1⅜ | 50152 | 9½ | 3 | 1B7704 | | | | 9½ | 2¼ | 1D4647 | | | |
| 6 | 1¾ | 1D4616 | 9⅝ | 1½ | 8B7943 | | | | | | | | | | | | |
| 6¼ | 1¾ | 1D4617 | | | | | | | | | | | | | | | |
| 6½ | 1½ | 2B1015 | | | | | | | | | | | | | | | |
| 6¾ | 1⅞ | 1D4619 | | | | | | | | | | | | | | | |
| 7 | 1⅞ | 1D4620 | | | | | | | | | | | | | | | |
| 7½ | 1⅞ | 1D4621 | | | | | | | | | | | | | | | |
| 7¾ | 2 | 3B7585 | | | | | | | | | | | | | | | |
| 8 | 1⅞ | 1D4622 | | | | | | | | | | | | | | | |
| 8½ | 2 | 1D4623 | | | | | | | | | | | | | | | |
| 9 | 2 | 1D4624 | | | | | | | | | | | | | | | |
| 9¾ | 2 | 4B2933 | | | | | | | | | | | | | | | |

| ¾-12 N.C. | | | 1⅛-12 N.F. | | | 1¼-7 N.C. | | | 1¼-12 N.F. | | |
|---|---|---|---|---|---|---|---|---|---|---|---|
| L | T | Part No | L | T | Part No. | L | T | Part No. | L | T | Part No. |
| 1⅞ | 13/32 | 2A1342† | 2½ | 1 15/16 | 1A2208 | 3½ | 2¾ | 2B1955 | 2¼ | 1 11/16 | 7B2289 |
| | | | 3½ | 1½ | 8B477 | 5 | 2¼ | 1D4648 | 3¼ | 1⅝ | 53416 |
| | | | 4⅜ | 1 15/16 | 5B1312 | 5½ | 2¼ | 1B2721 | 4 1/16 | 1½ | 1D5293 |
| | | | 6½ | 2 | 3B5752 | | | | 4¾ | 2½ | 7B8791 |
| | | | | | | | | | 5¾ | 1¾ | 7B888 |

†Low Head

Printed in U. S. A.

# CATERPILLAR STANDARDS

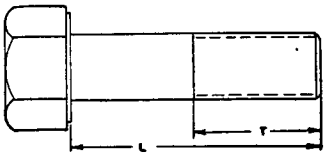


## BOLTS AND CAP SCREWS EXTRA LONG



| 5/16-18 N.C. | | | 5/16-24 N.F. | | | 3/8-16 N.C. | | | 3/8-24 N.F. | | | 1/2-13 N.C. | | | 1/2-20 N.F. | | |
|---|---|---|---|---|---|---|---|---|---|---|---|---|---|---|---|---|---|
| L | T | Part No. | L | T | Part No. | L | T | Part No. | L | T | Part No. | L | T | Part No. | L | T | Part No. |
| | | | | | | 10 1/4 | 7/8 | 5B289 | | | | | | | 12 7/8 | 1 5/8 | 2F31 |
| | | | | | | | | | | | | 10 1/2 | 1 1/4 | 8B7669 | | | |

| 5/8-11 N.C. | | | 5/8-18 N.F. | | | 3/4-10 N.C. | | | 3/4-16 N.F | | | 7/8-9 N.C. | | | 7/8-14 N.F. | | |
|---|---|---|---|---|---|---|---|---|---|---|---|---|---|---|---|---|---|
| L | T | Part No. | L | T | Part No. | L | T | Part No. | L | T | Part No. | L | T | Part No. | L | T | Part No. |
| | | | | | | | | | | | | 10 | 2 | 2B2391 | 10 1/2 | 1 1/2 | 3B3457 |
| | | | | | | | | | | | | | | | 11 | 2 | 3B4978 |
| | | | | | | | | | | | | | | | 11 1/2 | 2 | 4B7572 |
| | | | | | | | | | | | | | | | 13 3/4 | 2 | 2F28 |
| | | | 11 1/2 | 1 1/2 | 3B8751 | | | | | | | | | | 14 1/4 | 2 | 2F29 |
| | | | | | | | | | 11 | 2 | 2F30 | | | | | | |
| | | | | | | | | | 11 3/4 | 5/16 | 1F1265 | | | | | | |
| | | | | | | | | | 12 5/8 | 2 | 6B8740 | | | | | | |
| | | | | | | | | | 13 5/8 | 2 | 5B3520 | | | | | | |
| | | | | | | 10 1/4 | 1 5/8 | 50620 | | | | | | | | | |
| 10 1/4 | 1 3/4 | 1D4603 | | | | 23 5/8 | 6 1/4 | T-485 | | | | | | | | | |

| 1-8 N.C. | | | 1-14 N.F. | | | 1 1/4-7 N.C. | | | 1 3/8-6 N.C. | | | 1 1/2-6 N.C. | | | 2-4 1/2 N.C. | | |
|---|---|---|---|---|---|---|---|---|---|---|---|---|---|---|---|---|---|
| L | T | Part No. | L | T | Part No. | L | T | Part No. | L | T | Part No. | L | T | Part No. | L | T | Part No. |
| 12 1/8 | 2 3/4 | S-181* | | | | 10 | 2 1/2 | 1D4649 | | | | | | | | | |
| 14 3/8 | 1 5/8 | S-615* | | | | 10 1/2 | 3 | 6B388 | | | | | | | | | |
| 27 | 7 1/2 | V-199 | | | | 17 1/4 | 4 | 1045-A* | | | | | | | | | |
| 28 5/8 | 11 | S-1406 | | | | 29 1/8 | 13 1/2 | 2507-A | 25 15/16 | 7 5/16 | 1B6196 | | | | | | |
| 34 1/2 | 9 1/2 | L-1201 | 10 3/4 | 3 1/2 | 7B8363 | 37 | 10 | S-1972 | 54 5/16 | 13 1/2 | 3261-A | 32 7/8 | 8 | 1B6150* | | | |
| 37 1/2 | 8 1/2 | S-1823 | 15 | 2 3/4 | 2B3526 | | | | | | | | | | 37 1/4 | 9 | 2A1088 |

*Drilled end.

Printed in U.S.A.

# CATERPILLAR STANDARDS

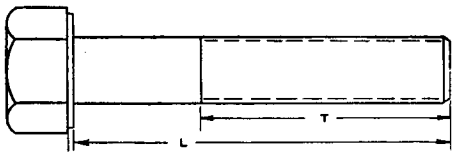


## BOLTS AND CAP SCREW—SPECIAL DIA.

Page No. 5 Issue No. 5 Date 6-1-43

| .250-28 N.F. | | | .310-24 N.F. | | | .3735-16 N.C. | | | .4370-20 N.F. | | | .4995-20 N.F. | | | .496-20 N.F. | | |
|---|---|---|---|---|---|---|---|---|---|---|---|---|---|---|---|---|---|
| L | T | Part No. | L | T | Part No. | L | T | Part No. | L | T | Part No. | L | T | Part No. | L | T | Part No. |
| 23/32 | 9/32 | 2A4382 | 1 1/4 | 9/16 | 6B1277 | 1 1/8 | 15/32 | 4B6697 | 1 1/4 | 5/8 | 8B8448 | 1 1/4 | 1/2 | 9B1697 | 2 | 1 | 1B4537 |
| 1 9/32 | 9/32 | 6B1715 | 1 1/4 | 9/16 | 3B1636 | 1 1/4 | 5/8 | 5B6459 | | | | 1 1/4 | 9/16 | 8B3703 | | | |
| 1 11/32 | 9/32 | 7B8797 | | | | 1 1/2 | 15/32 | 9B1521 | | | | 1 5/16 | 3/4 | 1B6070 | | | |
| | | | | | | 1 1/2 | 5/8 | 5B5613 | | | | 1 9/16 | 5/8 | 2B8838 | | | |
| | | | | | | 3 | 9/16 | 6B869 | | | | 1 11/16 | 3/4 | T-532 | | | |
| | | | | | | | | | | | | 2 5/16 | 15/16 | 2B9232 | | | |
| | | | | | | | | | | | | 2 7/16 | 15/16 | 2B9233 | | | |
| | | | | | | | | | | | | 2 17/32 | 7/8 | 6B3619 | | | |

| .6245-18 N.F. | | | .6245-11 N.C. | | | .7495-16 N.F. | | | .7495-10 N.C. | | | .875-14 N.F. | | | .874-9 N.C. | | |
|---|---|---|---|---|---|---|---|---|---|---|---|---|---|---|---|---|---|
| L | T | Part No. | L | T | Part No. | L | T | Part No. | L | T | Part No. | L | T | Part No. | L | T | Part No. |
| 1 5/32 | 23/32 | L-737 | 2 | 1 1/16 | 4B1422 | 1 3/16 | 3/4 | S-319 | 2 1/4 | 1 1/8 | 126-A | 2 1/4 | 1 1/8 | 4B9707 | 2 1/2 | 1 1/4 | 4B3318 |
| 1 1/4 | 13/16 | 1B7154 | 2 3/4 | 13/16 | 1B5577 | 1 3/8 | 3/8 | 8B2266 | 2 1/2 | 1 3/8 | 1B2209 | 3 | 1 | 2A267 | 3 | 1 3/16 | 3B1506 |
| 1 1/2 | 3/4 | 6B5063 | 3 3/8 | 7/8 | 2B8831 | 1 7/16 | 15/16 | 1A564 | 2 3/4 | 1 13/16 | 1B5804 | | | | | | |
| 1 1/2 | 7/8 | 1B5821 | 5 3/4 | 1 3/4 | 6B9539 | 1 1/2 | 15/16 | 8B1773 | 3 1/2 | 1 1/2 | 1A4921 | | | | | | |
| 1 11/16 | 1 5/16 | 6B9303 | 6 3/8 | 1 1/16 | 3B7393 | 1 5/8 | 7/8 | 2B9061 | 3 3/4 | 1 3/8 | 1A4864 | | | | | | |
| 1 3/4 | 3/4 | 1A3596 | | | | 1 5/8 | 1 1/16 | 1A3515 | 4 1/4 | 1 3/4 | S-137 | | | | | | |
| 1 7/8 | 13/16 | 1B4582 | | | | 1 13/16 | 1 3/16 | 2B2322 | | | | | | | | | |
| 2 1/16 | 3/4 | 1A6220 | | | | 2 | 1 1/8 | 1B6135 | | | | | | | | | |
| 2 1/8 | 11/16 | 1B6687 | | | | 2 5/16 | 1 5/16 | 2A1719 | | | | | | | | | |
| 2 1/4 | 13/16 | 7B1422 | | | | 2 1/4 | 15/16 | 5B1962 | | | | | | | | | |
| 2 3/8 | 13/16 | 5B9285 | | | | 2 1/4 | 15/16 | 2A1331 | | | | | | | | | |
| 2 5/16 | 13/16 | 5B6891 | | | | 2 1/4 | 1 3/16 | 7B8002 | | | | | | | | | |
| 2 3/4 | 7/8 | 2B3714 | | | | 2 1/2 | 1 | 1A4076 | | | | | | | | | |
| 3 | 7/8 | 7B1421 | | | | 2 1/2 | 1 1/8 | 1B2831 | | | | | | | | | |
| 3 1/16 | 13/16 | 6B9294 | | | | 2 11/16 | 7/8 | 2B9444 | | | | | | | | | |
| 3 3/8 | 13/16 | 5B6892 | | | | 2 3/4 | 1 3/8 | 2B1712 | | | | | | | | | |
| 3 1/2 | 13/16 | 2A2580 | | | | 2 7/8 | 1 1/8 | 2704A | | | | | | | | | |
| 3 3/4 | 7/8 | 2B3688 | | | | 3 | 1 | 1A6551 | | | | | | | | | |
| 4 1/4 | 1 | 5B6208 | | | | 3 1/8 | 1 1/4 | 2B9873 | | | | | | | | | |
| 6 | 1 1/8 | 1B1305 | | | | 3 3/8 | 1 5/16 | 4B7145 | | | | | | | | | |
| | | | | | | 3 1/2 | 1 | 4B8293 | .999-8 N.C. | | | .938-8 N.C. | | | | | |
| | | | | | | 3 5/8 | 1 1/4 | 3B816 | L | T | Part No. | L | T | Part No. | | | |
| | | | | | | 3 7/8 | 1 1/16 | 2B1530 | | | | | | | | | |
| | | | | | | 4 1/4 | 1 | 3B5383 | 4 3/4 | 1 7/8 | 2A1231 | 3 7/8 | 1 5/8 | 2A238 | | | |
| | | | | | | 4 3/8 | 1 | 2B9874 | | | | 4 1/2 | 1 5/8 | 2A237 | | | |
| | | | | | | 4 5/8 | 1 1/16 | 2B4668 | | | | | | | | | |

# CATERPILLAR STANDARDS

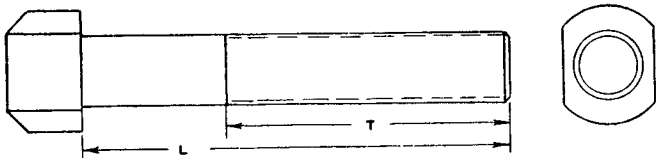


## BOLTS AND CAP SCREWS
## ROUND HEAD



| 3/8-24 N.F. | | | 1/2-20 N.F. | | | 9/16-18 N.F. | | | 5/8-11 N.C. | | | 5/8-18 N.F. | | | 3/4-10 N.C. | | |
|---|---|---|---|---|---|---|---|---|---|---|---|---|---|---|---|---|---|
| L | T | Part No. | L | T | Part No. | L | T | Part No. | L | T | Part No. | L | T | Part No. | L | T | Part No. |
| 2 3/8 | 1/2 | 6B5463 | | | | 3 7/16 | 1 | 2A3277 | 4 13/16 | 1 5/16 | 823C | 1 13/16 | 11/16 | B153 | 2 3/8 | 1 | 825D |
| | | | | | | | | | | | | | | | 3 1/4 | 1 5/8 | 699C |
| | | | | | | | | | | | | 2 1/8 | 1 | 922-A* | | | |
| | | | | | | | | | | | | 2 5/16 | 7/8 | S-1560 | | | |
| | | | | | | | | | | | | 2 1/4 | 1 1/8 | S-534 | | | |
| | | | | | | | | | | | | 2 7/16 | 1 1/16 | 176-A* | | | |

| 3/4-16 N.F. | | | 7/8-9 N.C. | | | 7/8-14 N.F. | | | 1-14 N.F. | | | 1 1/8-7 N.C. | | | 1 1/8-12 N.F. | | |
|---|---|---|---|---|---|---|---|---|---|---|---|---|---|---|---|---|---|
| L | T | Part No. | L | T | Part No. | L | T | Part No. | L | T | Part No. | L | T | Part No. | L | T | Part No. |
| 3 1/16 | 1/16 | 165-A | | | | 3 7/16 | 1 13/16 | 1B1142 | | | | | | | | | |
| 4 5/16 | 7/16 | 3B3220 | | | | | | | | | | | | | 6 11/16 | 1 3/8 | W-907 |

| 1 1/4-7 N.C. | | | 1 1/4-12 N.F. | | |
|---|---|---|---|---|---|
| L | T | Part No. | L | T | Part No. |
| | | | 4 5/8 | 1 3/4 | 2A3166 |
| | | | 6 3/16 | 1 7/16 | W586 |
| | | | 10 1/2 | 1 3/4 | 3B2443 |

*Drilled end. †Slotted end.

Printed in U. S. A.

# CATERPILLAR STANDARDS

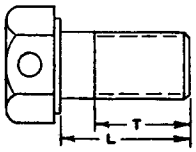


## BOLTS AND CAP SCREWS DRILLED HEAD



| ¼-20 N.C. | | | ⅝-18 N.C. | | | ⅝-24 N.F. | | | ⅜-16 N.C. | | | ⅜-24 N.F. | | | 7/16-20 N.F. | | |
|---|---|---|---|---|---|---|---|---|---|---|---|---|---|---|---|---|---|
| L | T | Part No. | L | T | Part No. | L | T | Part No. | L | T | Part No. | L | T | Part No. | L | T | Part No. |
| ⅜ | 9/32 | 2B2955 | ½ | ⅜ | 8440 | 5/16 | 3/16 | 4B7273 | ⅝ | ..... | ..... | ¾ | ⅝ | 119922 | | | |
| ½ | ⅜ | S-1082 | ¾ | 9/16 | 6B6962 | | | | ¾ | 9/16 | S-214 | 1½ | 1 | AL-372 | | | |
| ¾ | 9/16 | S-1347 | ¾ | ⅝ | 9005 | | | | 1 | ¾ | S-292 | | | | | | |
| 1 | ¾ | 5B7040 | ¾ | ⅝ | 508-A* | | | | 1¼ | 1 1/16 | 50160 | | | | | | |
| | | | 1 | ¾ | L-474 | | | | 1½ | 1⅛ | 755-A | | | | | | |
| | | | 1¼ | 15/16 | 15348 | | | | 1⅝ | 1½ | 1A4783 | | | | 1 15/16 | 11/16 | 4B3500 |
| | | | | | | | | | 1¾ | 1 5/16 | 10142 | | | | | | |
| | | | | | | | | | 2 | 1 1/16 | 1B9711 | | | | | | |

| ½-13 N.C. | | | ½-20 N.F. | | | ⅝-11 N.C. | | | ⅝-18 N.F. | | | ¾-10 N.C. | | | ¾-16 N.F. | | |
|---|---|---|---|---|---|---|---|---|---|---|---|---|---|---|---|---|---|
| L | T | Part No. | L | T | Part No. | L | T | Part No. | L | T | Part No. | L | T | Part No. | L | T | Part No. |
| | | | | | | ¾ | ..... | ..... | | | | 2½ | 1 | 727D | 4 7/8 | 1 1/16 | 3B4475 |
| | | | ⅞ | ¾ | 60253 | 1 | ⅞ | 60287 | | | | 6¼ | 1⅞ | 733D | 9¾ | 1¼ | 7014 |
| 1 | 13/16 | 500-A | | | | 1¼ | 1 | 1217-A | | | | | | | | | |
| 1¼ | ..... | ..... | | | | 1½ | ..... | ..... | | | | | | | | | |
| | | | | | | 1¾ | 1⅝ | 1759-A | | | | | | | | | |
| | | | | | | 2 | 1½ | 52470 | | | | | | | | | |
| | | | | | | 3 | ..... | ..... | | | | | | | | | |
| | | | | | | 3¼ | ..... | ..... | | | | | | | | | |
| | | | | | | 3¾ | 2½ | 50245 | | | | | | | | | |
| | | | | | | 5 | 2¼ | 892-A | | | | | | | | | |
| | | | | | | 6¼ | 1½ | 50249 | | | | | | | | | |

| ⅞-9 N.C. | | | ⅞-14 N.F. | | | 1-8 N.C. | | | 1-14 N.F. | | |
|---|---|---|---|---|---|---|---|---|---|---|---|
| L | T | Part No. | L | T | Part No. | L | T | Part No. | L | T | Part No. |
| | | | | | | 8 | 3 | AB-448 | 2½ | 1¼ | B-745 |
| 5 | 1¾ | 414-A | | | | | | | | | |
| | | | | | | | | | 15⅜ | 3⅛ | 5B1168 |

*Head 15/64" high

# CATERPILLAR STANDARDS

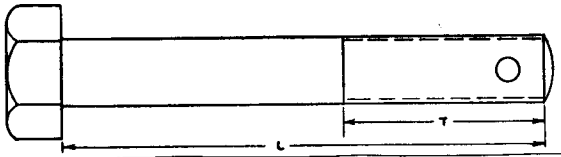


## BOLTS AND CAP SCREWS DRILLED END

Page No. 8 Issue No. 3 Date 6-1-43

| ¼-20 N.C. | | | ¼-28 N.F. | | | ⅝-18 N.C. | | | ⅝-24 N.F. | | | ⅜-16 N.C. | | | ⅜-24 N.F. | | |
|---|---|---|---|---|---|---|---|---|---|---|---|---|---|---|---|---|---|
| L | T | Part No. | L | T | Part No. | L | T | Part No. | L | T | Part No. | L | T | Part No. | L | T | Part No. |
| | | | ⅞ | ⅝ | 61297 | | | | | | | 3 | 13/16 | 1B2931 | | | |
| | | | 1 | ⅝ | 53180 | | | | 1 | ¾ | 53197 | | | | 1 | ¾ | 7B8082 |
| | | | 1 3/16 | 15/32 | 6B592 | | | | 1 ⅛ | ¾ | 50209 | | | | 1 ¼ | ... | ..... |
| | | | 1 11/32 | 17/32 | 6B6636 | | | | 1 ¼ | ¾ | 5B7158 | 2 | ⅝ | 7B5368 | 1 ½ | 13/16 | 61278 |
| | | | | | | | | | 1 ¼ | ¾ | AB-419 | | | | 1 ½ | ⅝ | 53217 |
| | | | | | | | | | 1 ½ | ⅞ | AB-504 | | | | 2 | ⅝ | 4B7831 |
| | | | | | | | | | 1 9/16 | 13/16 | 1A6308 | | | | 2 | ¾ | 53219 |
| | | | | | | | | | 1 ¾ | ⅞ | AB-420 | | | | 2 | 11/16 | 60063 |
| | | | | | | | | | 2 | ⅞ | AB-503 | | | | 2 ⅛ | ⅝ | 7B5366 |
| | | | | | | | | | 2 ⅜ | 9/16 | 7B4576 | | | | 2 ¼ | 13/16 | 53220 |
| | | | | | | | | | | | | | | | 2 ½ | 9/16 | B-144 |
| | | | | | | | | | | | | | | | 2 ½ | ... | ..... |
| | | | | | | | | | | | | | | | 2 ⅜ | ⅝ | 7B5367 |
| | | | | | | | | | | | | | | | 2 ¾ | 13/16 | 8977 |
| | | | | | | | | | | | | | | | 3 | 13/16 | 53223 |
| | | | | | | | | | | | | | | | 3 ¼ | 9/16 | 60219 |
| | | | | | | | | | | | | | | | 3 ½ | 13/16 | 53225 |
| | | | | | | | | | | | | | | | 4 ½ | 1 | 6178 |
| | | | | | | | | | | | | | | | 5 ¼ | ⅞ | 53232 |

# CATERPILLAR STANDARDS

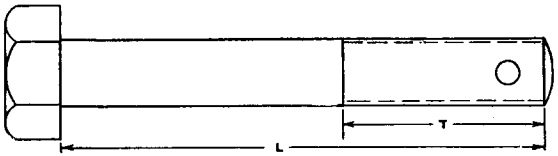


## BOLTS AND CAP SCREWS DRILLED END

Page No. 9 Issue No. 3 Date 6-1-43

| 7/16-14 N.C. | | | 7/16-20 N.F. | | | 1/2-13 N.C. | | | 1/2-20 N.F. | | | 5/8-11 N.C. | | | 5/8-18 N.F. | | |
|---|---|---|---|---|---|---|---|---|---|---|---|---|---|---|---|---|---|
| L | T | Part No. | L | T | Part No. | L | T | Part No. | L | T | Part No. | L | T | Part No. | L | T | Part No. |
| | | | 1 1/4 | 7/8 | 1F1731 | | | | 1 1/4 | 3/4 | B-912 | 5 | 1 1/4 | 1D2640 | | | |
| | | | 1 1/4 | 1 | 8B7133 | | | | 1 | 3/4 | B-911 | 5 | 2 1/2 | 350-D | | | |
| | | | 1 1/2 | 1 | 13442 | | | | 1 1/2 | 1 | 53261 | 6 | 2 1/2 | 349-D | | | |
| | | | 1 3/4 | 11/16 | 1F1732 | | | | 1 1/2 | 3/4 | 60109 | | | | 2 | 15/16 | B-334 |
| | | | 1 3/4 | 1 | 8B7134 | | | | 1 3/4 | 3/4 | B-917 | | | | | | |
| | | | 2 | 3/4 | 3B7784 | 5 1/2 | 1 3/8 | 555-A | 2 | 3/4 | B-827 | | | | 2 1/4 | 15/16 | B-81 |
| | | | 2 | 7/8 | 4B257 | | | | 2 | 1 | 60222 | | | | 2 1/2 | 1 | 53301 |
| | | | 2 | 1 | 7B3827 | | | | 2 1/4 | 3/4 | 60385 | | | | | | |
| | | | 2 1/2 | 7/8 | 3B1998 | | | | 2 1/4 | 1 | 3B516 | | | | 2 3/4 | ..... | 2878 |
| | | | | | | | | | 2 1/2 | 1 3/8 | 5B7558 | | | | 2 7/8 | 7/8 | 1B5353 |
| | | | | | | | | | 2 11/16 | 13/16 | 8B2725 | | | | 3 1/2 | 1 1/4 | 10410 |
| | | | | | | | | | 3 | 1 | 9475 | | | | | | |
| | | | | | | | | | 3 7/16 | 13/16 | 61260 | | | | | | |
| | | | | | | | | | 3 1/2 | 1 1/8 | 53269 | | | | 5 1/4 | 1 3/4 | 739-A |
| | | | | | | | | | 3 1/2 | 1 | 1B5775 | | | | | | |
| | | | | | | | | | 3 5/8 | 3/4 | 2B902 | | | | 5 3/4 | 2 1/2 | 7819 |
| | | | | | | | | | 3 3/4 | 1 1/4 | 53270 | | | | 6 1/2 | 2 1/2 | 53317 |
| | | | | | | | | | 4 5/8 | 1 3/8 | B-808 | | | | 6 3/4 | 1 1/8 | B-484 |
| | | | | | | | | | 4 11/16 | 1 5/16 | B-958 | | | | | | |
| | | | | | | | | | 5 | 1 1/4 | 60303 | | | | | | |
| | | | | | | | | | 5 1/8 | 1 3/8 | B-79-B | | | | | | |
| | | | | | | | | | 5 1/2 | 1 5/16 | 53277 | | | | | | |
| | | | | | | | | | 5 3/4 | 1 1/2 | 3B5769 | | | | | | |
| | | | | | | | | | 6 1/8 | 1 5/8 | 52461 | | | | | | |
| | | | | | | | | | 6 1/4 | 3 1/4 | 1B5663 | | | | | | |

# CATERPILLAR STANDARDS

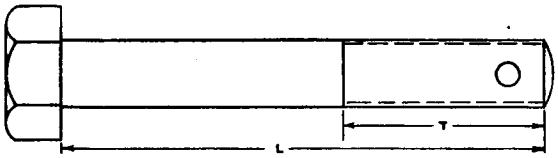


## BOLTS AND CAP SCREWS DRILLED END

Page No. 10 Issue No. 4 Date 6-1-43

| ⅜-10 N.C. | | | ⅜-16 N.F. | | | ⅞-9 N.C. | | | ⅞-14 N.F. | | | 1-8 N.C. | | | 1-14 N.F. | | |
|---|---|---|---|---|---|---|---|---|---|---|---|---|---|---|---|---|---|
| L | T | Part No. | L | T | Part No. | L | T | Part No. | L | T | Part No. | L | T | Part No. | L | T | Part No. |
| | | | 2⅛ | 1⅛ | 2A308 | | | | | | | | | | | | |
| | | | 2¼ | 1⅛ | 53320 | | | | 2¼ | 1 9/16 | 53343 | | | | | | |
| | | | | | | | | | 2½ | 1 9/16 | 60491 | | | | 2 11/16 | 1 11/16 | 3325-A |
| | | | 2¾ | 1½ | 8289 | | | | 3 | 1⅞ | 53346 | | | | | | |
| | | | | | | | | | 3 | 2¼ | 5664 | | | | 3⅛ | 1⅜ | 13919 |
| | | | | | | | | | 3¼ | ..... | ..... | | | | | | |
| | | | | | | 11¼ | 3 | 1D6359 | 3½ | 2¼ | 5665 | | | | 3¾ | 1½ | 10419 |
| | | | | | | | | | | | | | | | 4½ | 1⅝ | 4B4841 |
| | | | | | | | | | | | | | | | 5⅞ | 1⅜ | 3B1985 |
| | | | | | | | | | | | | | | | 11⅝ | 1⅝ | 6B3604 |
| 8½ | 1½ | 683-A | | | | | | | | | | | | | | | |
| | | | 9¾ | 1¼ | 7014 | | | | | | | | | | | | |

| 1⅛-12 N.F. | | | 1¼-12 N.F. | | | 1⅛-7 N.C. | | | 1⅜-6 N.C. | | | 1½-12 N.F. | | | | | |
|---|---|---|---|---|---|---|---|---|---|---|---|---|---|---|---|---|---|
| L | T | Part No. | L | T | Part No. | L | T | Part No. | L | T | Part No. | L | T | Part No. | | | |
| | | | | | | | | | 8⅝ | 1½ | 8B926 | 8 13/16 | 2 5/16 | 2297A | | | |
| | | | | | | | | | 9⅜ | 1⅝ | 8B920 | 13¾ | 1⅞ | 8B934 | | | |
| | | | 3¼ | 1⅝ | 53416 | | | | | | | | | | | | |
| 6½ | 1⅝ | 60304 | 7¼ | 1⅞ | 2B2802 | | | | | | | | | | | | |
| 6¾ | 2 | 3B3218 | 8 3/16 | 1 11/16 | 1D4872 | | | | | | | | | | | | |
| 7¾ | 1⅜ | 1D2938 | | | | 7⅞ | 1⅜ | 2B7305 | | | | | | | | | |
| | | | | | | 8¾ | 1⅜ | 1D7016 | | | | | | | | | |
| | | | | | | 10¼ | 1½ | 1D7015 | | | | | | | | | |

# CATERPILLAR STANDARDS

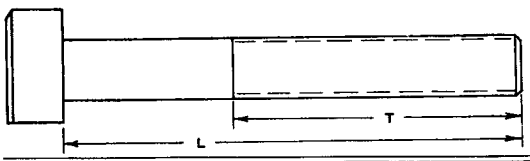


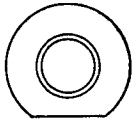

## BOLTS AND CAP SCREWS
## MILLED HEAD



| 5/16-24 N.F. | | | 3/8-16 N.C. | | | 3/8-24 N.F. | | | 7/16-20 N.F. | | | 1/2-20 N.F. | | | 9/16-18 N.F. | | |
|---|---|---|---|---|---|---|---|---|---|---|---|---|---|---|---|---|---|
| L | T | Part No. | L | T | Part No. | L | T | Part No. | L | T | Part No. | L | T | Part No. | L | T | Part No. |
| 1 29/32 | 3/4 | 2A3437 | 2 5/8 | 7/8 | S-815 | 1 15/16 | 11/16 | 1A8295 | 2 3/8 | 15/16 | T-25* | | | | | | |
| 2 1/32 | 9/16 | 7B4523 | | | | 2 3/8 | 3/4 | 4B2704 | 2 11/16 | 15/16 | 5B4581 | 3 3/16 | 1 | L-634* | | | |
| | | | | | | 2 15/32 | 15/16 | 7B4611 | | | | | | | 3 3/8 | 1 | B-173* |
| | | | | | | | | | | | | | | | 3 7/8 | 1 1/4 | S-366 |

| 5/8-18 N.F. | | | 3/4-16 N.F. | | |
|---|---|---|---|---|---|
| L | T | Part No. | L | T | Part No. |
| 2 | 1 | W-224 | | | |
| 3 11/16 | 1 5/16 | 154A | | | |
| 3 3/4 | 1 1/4 | 1A375 | 4 1/16 | 1 15/16 | 231-A* |
| 4 5/8 | 1 7/8 | 384-D | | | |
| | | | 4 1/2 | 1 3/8 | 2581-A* |
| | | | 4 7/8 | 1 21/32 | 1A5403 |

*Drilled End.

Printed in U. S. A.

# CATERPILLAR STANDARDS

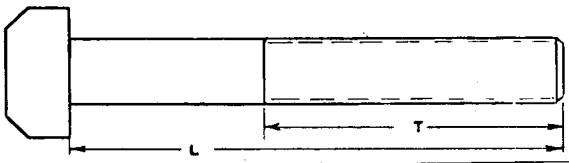


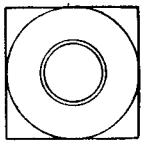

## BOLTS—SPECIAL TRACK SHOE AND GROUSER



| 5/8-11 N.C. | | | 5/8-18 N.F. | | | 3/4-10 N.C. | | | 3/4-16 N.F. | | | 7/8-9 N.C. | | | 7/8-14 N.F. | | |
|---|---|---|---|---|---|---|---|---|---|---|---|---|---|---|---|---|---|
| L | T | Part No. | L | T | Part No. | L | T | Part No. | L | T | Part No. | L | T | Part No. | L | T | Part No. |
| | | | | | | 1 3/4 | 1 | 266-D | 1 7/8 | 1 1/4 | 19722 | | | | | | |
| 2 5/16 | 1 1/16 | T-1210 | | | | | | | | | | 1 31/32 | 1 1/2 | 573-C | | | |
| 2 1/2 | 1 | V-819 | | | | 3 1/4 | 1 1/4 | S-1844 | | | | | | | | | |
| | | | | | | 3 1/2 | 1 1/2 | 21352 | | | | | | | | | |
| | | | | | | 4 | 1 1/2 | 17690 | | | | 3 1/2 | 1 3/4 | 2904-A | | | |
| | | | | | | | | | | | | 3 3/4 | 1 3/4 | 1B9238 | | | |
| | | | | | | | | | | | | 4 1/8 | 1 3/4 | 2870-A | | | |
| | | | | | | | | | | | | 4 3/4 | 1 5/8 | 17689 | | | |

# CATERPILLAR STANDARDS

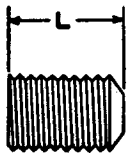


## SET SCREW—HOLLOW HEAD



| Cup Point | | Dog Point | | Flat Point | |
|---|---|---|---|---|---|
| L | Part No. | L | Part No. | L | Part No. |
| #10-24 | | ¼"—20 | | ⅜"—16 | |
| ¼" | 5B9324 | 1" (*) | 4B9746 | 1⅛" | 8B6664 |
| ¼"—20 | | ⅝"—18 | | | |
| ¼" | 4B9806 | 13/16" (*) | 7B7343 | | |
| ⅜" | 4B9807 | | | | |
| ½" | 4B9808 | ⅜"—16 | | | |
| ¼"—28 | | ¾" | 5B448 | | |
| 5/16" | 3B9191 | 1⅛" (*) | 6B4549 | | |
| | | 1 35/64"(*) | 6B7022 | | |
| ⅜"—18 | | ¾"—10 | | | |
| 5/16" | 4B4749 | 1¾" | 3B8605 | | |
| ⅜" | 8B7179 | 2" | 3B8606 | | |
| ¾" | 7B1600 | 2¼" | 3B8607 | | |
| ⅜"—16 | | | | | |
| ½" | 3B8601 | | | | |
| ½"—13 | | | | | |
| ¾" | 4B1771 | | | | |
| ½"—20 | | | | | |
| ⅜" | 4B1497 | | | | |
| ½"—11 | | | | | |
| ½" | 3B8602 | | | | |
| ⅝" | 3B8591 | | | | |
| ¾" | 3B8603 | | | | |
| 1" | 3B8604 | | | | |

(*) Cadmium Plated

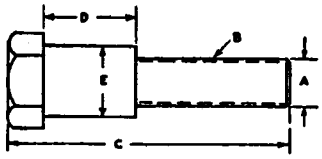


## BOLTS—SHOULDER HEX. HEAD



| A | B | C | D | E | Part No. | A | B | C | D | E | Part No. |
|---|---|---|---|---|---|---|---|---|---|---|---|
| 5/16 | 24 | 2 5/32 | 1 15/32 | .437 / .432 | 8B270 | 7/8 | 9 | 3 3/16 | 1 | 1.000 / .995 | 1D414 |
| 3/8 | 16 | 1 3/4 | 1 1/64 | .497 | S-996 | 1 | 8 | 2 15/16 | 1 7/16 | 1 1/2 | S-858 |
| 3/8 | 16 | 1 7/8 | 33/64 | .498 / .497 | W-206 | 1 | 14 | 4 13/16 | 1 25/32 | 1.245 | 2B4798 |
| 3/8 | 24 | 2 1/4 | 1 15/32 | .498 / .497 | 8B7607 | 1 | 14 | 3 7/8 | 1 9/64 | 1 1/4 | 3B1984 |
| 1/2 | 13 | 1 3/8 | 13/32 | .625 | 1B4259 | 1 1/4 | 12 | 3 1/16 | 1 3/32 | 1 1/2 | 2B9088 |
| 1/2 | 13 | 2 7/32 | 1 3/8 | .750 | 7B4311 | 1 3/8 | 12 | 8 | 1 27/32 | 1.750 | 7B8897 |
| 1/2 | 13 | 1 9/16 | 9/16 | .625 / .620 | 1D404 | 1 3/8 | 12 | 6 1/2 | 1 27/32 | 1.750 | 7B8898 |
| 1/2 | 13 | 1 3/4 | 17/32 | .625 | 1B4258 | 1 1/2 | 12 | 8 1/2 | 2 1/8 | 1 3/4 | 6B2657 |
| 1/2 | 13 | 1 7/8 | 1/2 | .750 / .745 | 1D401 | 1 1/2 | 12 | 6 15/16 | 2 1/4 | 1 3/4 | 6B2656 |
| 1/2 | 13 | 2 | 15/32 | .625 | 1B4257 | | | | | | |
| 1/2 | 13 | 2 5/8 | 11/32 | .750 / .745 | 1D407 | | | | | | |
| 1/2 | 13 | 5 7/8 | 9/16 | .625 | 1D3658 | | | | | | |
| 5/8 | 11 | 2 1/16 | 9/16 | .750 / .745 | 1D408 | | | | | | |
| 5/8 | 11 | 2 3/16 | 11/16 | .750 / .745 | 1D412 | | | | | | |
| 5/8 | 11 | 2 1/4 | 21/32 | .750 | 2B2073 | | | | | | |
| 5/8 | 11 | 2 3/8 | 3/4 | .749 | 2B1777 | | | | | | |
| 5/8 | 11 | 2 7/16 | 11/16 | .750 / .745 | 1D402 | | | | | | |
| 5/8 | 11 | 2 11/16 | 11/16 | .750 / .745 | 1D409 | | | | | | |
| 5/8 | 11 | 2 11/16 | 1 3/8 | .750 / .745 | 1D411 | | | | | | |
| 5/8 | 11 | 2 3/4 | 1 | .750 / .745 | 1D413 | | | | | | |
| 5/8 | 11 | 2 15/16 | 9/16 | .750 / .745 | 1D403 | | | | | | |
| 5/8 | 11 | 3 11/16 | 11/16 | .750 / .745 | 1D410 | | | | | | |
| 5/8 | 11 | 4 3/8 | 2 5/16 | .875 | 1D7103 | | | | | | |
| 3/4 | 10 | 2 9/16 | 13/16 | .875 / .870 | 1D405 | | | | | | |
| 3/4 | 10 | 3 | 1 1/8 | .875 / .870 | 1D406 | | | | | | |
| 3/4 | 10 | 3 1/8 | 1 9/16 | 1.125 | 7B5703 | | | | | | |
| 3/4 | 10 | 4 | 1 | 1 | 2B9765 | | | | | | |
| 3/4 | 10 | 6 | 3/4 | .775 / .770 | R-54 | | | | | | |

# CATERPILLAR STANDARDS

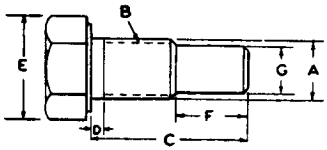


## ADJUSTING SCREWS

Page No. 15 Issue No. 3 Date 2-1-36

| A | B | C | D | E | F | G | Part No. | | | |
|---|---|---|---|---|---|---|---|---|---|---|
| 3/8 | 16 | 22/32 | 5/32 | 9/16 | 7/32 | 1/4 | T-442 | | | |
| 3/8 | 16 | 1 | 1/8 | 9/16 | 1/8 | 1/4 | T-195 | | | |
| 3/8 | 16 | 1 1/4 | 5/32 | 9/16 | None | None | 2A1396 | | | |
| 1/2 | 13 | 7/8 | 1/16 | 3/4 | 5/16 | 3/8 | L-1413 | | | |
| 1/2 | 20 | 1 3/8 | 1/16 | 3/4 | 5/16 | 3/8 | L-1535 | | | |
| 1/2 | 13 | 1 7/16 | 3/32 | 3/4 | 9/16 | 3/8 | 1A1434 | | | |
| 1/2 | 13 | 1 3/16 | 3/32 | 3/4 | 3/8 | 3/8 | 1A1946 | | | |
| 5/8 | 11 | 1 1/8 | 5/32 | 15/16 | 7/16 | 1/2 | 1A58 | | | |
| 5/8 | 11 | 1 5/8 | 1/8 | 15/16 | 3/4 | 1/2 | 1A1575 | | | |
| 5/8 | 18 | 2 5/8 | 5/32 | 15/16 | None | None | 2A1793 | | | |
| 5/8 | 11 | 3 | 5/32 | 3/4 | 2 1/4 | 31/64 | L-1860 | | | |
| 1 | 14 | 1 5/8 | 3/16 | 1 5/16 | 21/32 | 5/8 | T-327 | | | |

# CATERPILLAR STANDARDS

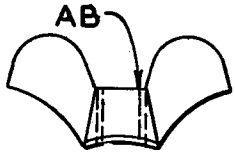


## NUTS, WING



| A | B | Part No. | L | T | Part No. | L | T | Part No. | L | T | Part No. | L | T | Part No. | L | T | Part No. |
|---|---|---|---|---|---|---|---|---|---|---|---|---|---|---|---|---|---|
| 1/4 | 20 | 1B491 | | | | | | | | | | | | | | | |
| 5/16 | 18 | 1B914 | | | | | | | | | | | | | | | |
| 5/16 | 18 | 2B4690 | | | | | | | | | | | | | | | |
| 5/16 | 18 | 3B723 | | | | | | | | | | | | | | | |
| 3/8 | 16 | 2B9498 | | | | | | | | | | | | | | | |
| 1/2 | 20 | 2B1937 | | | | | | | | | | | | | | | |

# CATERPILLAR STANDARDS

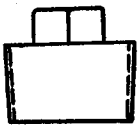
1


2


3

PLUGS—PIPE

Page No. 17 Issue No. 4 Date 7-1-41

| No. 1 STANDARD | | No. 2 COUNTERSUNK HEAD | | No. 3 SLOTTED HEAD | |
|---|---|---|---|---|---|
| 1/8" (*) | 2B7408 | 3/8" (*) | 4B4845 | 1/8" | 2B4602 |
| 1/8" (**) | 6B7440 | 1/2" (*) | 2B858 | 1/4" | 2B174 |
| 1/8" ( ) | 2B8253 | 1/2" (**) | 8B8817 | | |
| 1/4" (*) | 2B7409 | 3/4" (*) | 1B5174 | | |
| 1/4" (**) | 5B7890 | 1" (*) | 3B551 | | |
| 3/8" (*) | 2B7457 | 1 1/4" | 1B5170 | | |
| 3/8" (**) | 9B887 | 1 1/2" | 7B9665 | | |
| 1/2" (*) | 2B7410 | | | | |
| 1/2" (**) | 5B5098 | | | | |
| 3/4" (*) | 2B7411 | | | | |
| 3/4" ( ) | 8B543 | | | | |
| 1" (*) | 2B7412 | | | | |
| 1" (**) | 5B5097 | | | | |
| 1 1/4" | 3B342 | | | | |
| 1 1/2" | 4B2661 | | | | |
| 2" | 4B8586 | | | | |

(*) Cadmium Plated (**) Brass (‡) Drilled Through

# CATERPILLAR STANDARDS

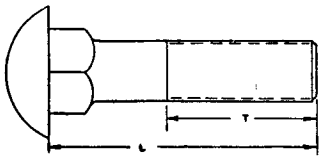


## BOLTS—CARRIAGE



| ¼-20 N.C. | | | ⅝-18 N.C. | | | ⅜-16 N.C. | | | ⅞-14 N.C. | | | ½-13 N.C. | | | ⅝-11 N.C. | | |
|---|---|---|---|---|---|---|---|---|---|---|---|---|---|---|---|---|---|
| L | T | Part No. | L | T | Part No. | L | T | Part No. | L | T | Part No. | L | T | Part No. | L | T | Part No. |
| ⅝ | 15/16 | 1B2693 | ⅝ | ... | ..... | ¾ | ½ | 1D4675 | | | | 1 | ... | ..... | 1 | ... | ..... |
| ¾ | ... | ..... | ¾ | ½ | 1B2705 | ⅞ | ⅝ | 1D4676 | | | | 1¼ | ⅞ | 1D4687 | 1¼ | ... | ..... |
| 1 | ¾ | 1D4669 | ⅞ | ... | 2B6042 | 1 | ¾ | 1D4677 | | | | 1½ | 1 | 1D4688 | 1½ | 1 | 1D4697 |
| 1¼ | ¾ | 1D4670 | 1 | ... | 3B371 | 1¼ | ¾ | 1D4678 | | | | 1¾ | 1 | 1D4689 | 1¾ | 1¼ | 1D5914 |
| 1½ | ¾ | 1B2694 | 1¼ | ¾ | 1D4671 | 1½ | 1 | 1B2706 | | | | 2 | 1 | 1D5166 | 2 | 1¼ | 1D4698 |
| 1¾ | ¾ | 1B2695 | 1½ | ¾ | 1D4672 | 1¾ | ¾ | 1D4704 | | | | 2¼ | 1 | 1D4690 | 2¼ | 1¼ | 1D4699 |
| 2 | ¾ | 1B2696 | 1¾ | ⅞ | 1D4673 | 2 | ⅞ | 1D4679 | | | | 2 ½ | 1 | 1D4691 | 2½ | 1¼ | 1D4700 |
| 2¼ | ¾ | 1B2699 | 2 | ... | 3B730 | 2¼ | ⅞ | 1D4680 | | | | 2¾ | 1 | 1D4692 | 2¾ | 1¼ | 1D4701 |
| 2½ | ¾ | 1B2697 | 2¼ | ¾ | 1B2792 | 2½ | 1 | 1D4681 | 2½ | ⅞ | 1B2789 | 3 | 1⅛ | 1D4693 | | | |
| 2¾ | ¾ | 1B2698 | 2½ | ⅞ | 2B1313 | 2¾ | 1 | 1D4682 | | | | 3¼ | 1¼ | 1B2709 | 3¼ | 1½ | 1D4702 |
| 3 | ¾ | 1B2700 | 2¾ | ⅞ | 1D4820 | 3 | 1 | 1D4683 | | | | 3½ | 1⅛ | 1D4694 | | | |
| 3¼ | ¾ | 1B2701 | 3 | ⅞ | 1D4674 | 3¼ | 1 | 1B9044 | 3¼ | 1⅛ | 1B2933* | | | | | | |
| 3½ | ¾ | 1B2702 | | | | | | | | | | 4 | 1⅛ | 1D4695 | | | |
| 3¾ | ⅞ | 1D4715 | | | | 3¾ | 1 | 1D4684 | | | | | | | | | |
| | | | | | | | | | | | | 4½ | 1¼ | 1D4696 | | | |
| | | | | | | 4¼ | 1⅛ | 1D4685 | | | | 4¾ | 1¼ | 1B2711 | | | |
| 4½ | ¾ | 53743 | | | | 4½ | 1⅛ | 1D4686 | | | | | | | | | |
| 4¾ | ¾ | 1B2703 | | | | 4¾ | 1⅛ | 1B6433 | | | | | | | | | |
| | | | | | | 5 | 1 | 1B7531 | | | | | | | | | |
| 5 | ¾ | 1B7717 | 5¼ | 1 | 2B9368 | 5¼ | 1⅛ | 1B6434 | | | | | | | | | |
| 5½ | ¾ | 1B2704 | 5½ | 15/16 | 53763 | 5½ | 1 | 1B2707 | | | | 6 | 1¼ | 1B2712 | | | |
| | | | 5¾ | 1 | 2B9369 | | | | | | | 6½ | 1¼ | 1B2710 | | | |
| | | | | | | 6 | 1¼ | 1D4821 | | | | | | | | | |
| | | | | | | | | | | | | 7 | 1¼ | 1B7390 | | | |
| | | | | | | | | | | | | 7½ | 1¼ | 1B4809 | | | |
| 10 | 1 | 53754 | | | | | | | | | | | | | | | |
| | | | | | | | | | | | | 10¾ | 1¼ | 1B4942 | | | |

*Drilled end.

# CATERPILLAR STANDARDS

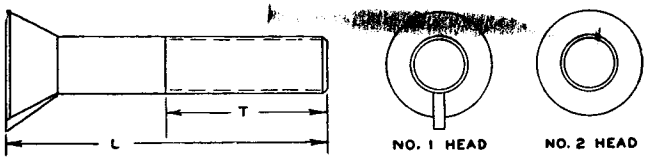


## BOLT—PLOW No. 1 AND No. 2 HEAD

Page No. 19 Issue No. 4 Date 6-1-43

| No. 1 Head ½-13 N.C. | | | No. 1 Head ⅝-11 N.C. | | | No. 2 Head ⅜-16 N.C. | | | No. 2 Head ½-13 N.C. | | | No. 2 Head ⅝-11 N.C. | | | No. 2 Head 1-8 N.C. | | |
|---|---|---|---|---|---|---|---|---|---|---|---|---|---|---|---|---|---|
| L | T | Part No. | L | T | Part No. | L | T | Part No. | L | T | Part No. | L | T | Part No. | L | T | Part No. |
| 1¼ | ¾ | 1D4840 | | | | | | | | | | | | | | | |
| 1½ | ⅞ | 3B442 | | | | | | | 1¼ | ¾ | 1D4823 | | | | | | |
| 1¾ | 1¼ | 1B7394 | 1¾ | 1⅛ | 1D4663 | 1½ | ⅞ | 1D4833 | 1½ | ⅞ | 1D4824 | | | | | | |
| 2 | 1 | 1B7026 | 2 | 1 5/16 | 3B441 | 1¾ | ⅞ | 1D4822 | 1¾ | ⅞ | 1D4825 | 1¾ | 1⅛ | 1D4837 | | | |
| 2½ | 1 | 1B9123 | | | | | | | 2 | ⅞ | 1D4826 | 2 | 1⅛ | 1D4838 | | | |
| 3¾ | 1¼ | 1A8554 | 3 | 1¼ | 1D4664 | | | | | | | | | | | | |
| 4 | 1¼ | 1B7025 | 3½ | 1¼ | 1D4665 | | | | 3¼ | 1⅛ | 1D4667 | | | | 3½ | 1½ | 1D4839 |

| No. 1 Head 7/16-14 N.C. | | |
|---|---|---|
| L | T | Part No. |
| 1¼ | ¾ | 1B9124 |
| 1½ | 1 | 1B9127 |
| 1¾ | 1 | 1B9128 |

# CATERPILLAR STANDARDS

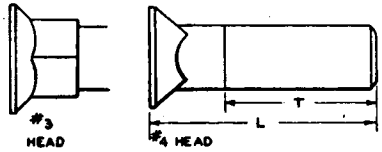


## BOLT—PLOW, No. 3 AND No. 4 HEAD

Page No. 20 Issue No. 3 Date 2-1-36

| No. 3 Head 5/8-16 N.C. | | | No. 3 Head 7/16-14 N.C. | | | No. 3 Head 1/2-13 N.C. | | | No. 3 Head 5/8-11 N.C. | | | No. 3 Head 3/4-10 N.C. | | | No. 3 Head 1-8 N.C. | | |
|---|---|---|---|---|---|---|---|---|---|---|---|---|---|---|---|---|---|
| L | T | Part No. | L | T | Part No. | L | T | Part No. | L | T | Part No. | L | T | Part No. | L | T | Part No. |
| | | | | | | 1 1/4 | 3/4 | 1D4650 | | | | | | | | | |
| 1 1/2 | 7/8 | 1D4833 | | | | 1 1/2 | 7/8 | 1D4651 | 1 1/2 | 7/8 | 1D4713 | | | | | | |
| | | | 1 3/4 | 7/8 | 1B4579 | 1 3/4 | 7/8 | 1D4652 | 1 3/4 | 1 1/8 | 1D4657 | | | | | | |
| 2 | 7/8 | 1D4834 | | | | 2 | 7/8 | 1D4653 | 2 | 1 1/8 | 1D4658 | 2 | 1 1/4 | 1D5913 | | | |
| | | | | | | 2 1/4 | 1 | 1D4654 | 2 1/4 | 1 1/4 | 1D4659 | | | | | | |
| | | | | | | 2 1/2 | 1 | 1D4655 | 2 1/2 | 1 1/4 | 1D4660 | 2 1/2 | 1 1/4 | 1D4835 | | | |
| | | | | | | 2 3/4 | 1 | 1D4656 | 2 3/4 | 1 1/4 | 1D4661 | | | | | | |
| | | | | | | 3 | 1 | 1D4710 | 3 | 1 1/4 | 1D4662 | 3 | 1 1/4 | 1D4836 | 3 | 1 1/2 | 1D4668 |
| | | | | | | 3 1/2 | 1 1/8 | 1D4711 | 3 1/2 | 1 1/4 | 1D4714 | | | | | | |
| | | | | | | | | | 4 | 1 1/4 | 1D5912 | | | | | | |
| | | | | | | 5 | 1 1/4 | 1D4712 | | | | | | | | | |

| | | | | | | No. 4 Head 1/2-13 N.C. | | | No. 4 Head 5/8-11 N.C. | | | | | | | | |
|---|---|---|---|---|---|---|---|---|---|---|---|---|---|---|---|---|---|
| | | | | | | L | T | Part No. | L | T | Part No. | | | | | | |
| | | | | | | 1 1/4 | 3/4 | 1B7393 | | | | | | | | | |
| | | | | | | | | | 2 1/4 | 1 1/2 | 1B7392 | | | | | | |
| | | | | | | | | | 2 3/4 | 1 1/2 | 1B7391 | | | | | | |

# CATERPILLAR STANDARDS

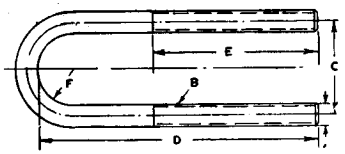


## BOLTS—U



| A | B | C | D | E | F | Part No. |
|---|---|---|---|---|---|---|
| 1/4 | 28 | 3/4 | 1 13/16 | 5/8 | 1/4 | 1B1433 |
| 3/8 | 16 | 2 7/8 | 3 1/2 | 2 | 1 1/4 | T-01503 |
| 3/8 | 24 | 1 5/16 | 1 5/16 | 5/8 | | 1A9551 |
| 3/8 | 24 | 2 | 1 3/4 | 1 | | 1B5123 |
| 3/8 | 16 | 2 1/16 | 3 | 1 1/4 | 27/32 | W-297 |
| 3/8 | 16 | 3 15/16 | 3 11/16 | 11/16 | 1 5/16 | 1D6209 |
| 3/8 | 16 | 2 7/8 | 3 1/2 | 2 | 1 1/4 | T01503 |
| 3/8 | 16 | 3 15/16 | | 3/4 | | 2B8001 |
| 3/8 | 24 | 1 5/16 | 1 5/16 | 5/8 | | 1A9551 |
| 3/8 | 24 | 2 | 1 3/4 | 1 | | 1B5123 |
| 1/2 | 13 | 2 7/8 | 4 5/16 | 1 1/4 | 1 5/16 | 2B138 |
| 1/2 | 13 | 5 | 8 3/4 | 3 3/4 | 2 1/4 | 123135 |
| 1/2 | 13 | 2 7/8 | 4 5/16 | 1 1/4 | 1 5/16 | 2B138 |
| 1/2 | 13 | 5 | 8 3/4 | 3 3/4 | 2 1/4 | 123135 |
| 5/8 | 11 | 2 1/8 | 2 27/32 | 1 11/32 | 3/4 | S-220 |
| 5/8 | 11 | 1 7/8 | 3 1/8 | 2 | 5/8 | W-356 |
| 5/8 | 11 | 5 7/8 | 11 1/2 | 2 1/4 | 2 5/8 | AL-488 |
| 5/8 | 18 | 4 1/4 | 4 7/16 | 1 3/8 | 1 13/16 | 1C3629 |
| 5/8 | 18 | 5 5/16 | 4 11/16 | 2 | 1 15/16 | 1C3535 |
| 5/8 | 18 | 4 1/4 | 4 7/16 | 1 3/8 | 1 13/16 | 1C3629 |
| 5/8 | 18 | 5 5/16 | 4 11/16 | 2 | 1 15/16 | 1C3535 |
| 3/4 | 10 | 2 7/8 | 3 3/4 | 1 1/2 | 1 1/16 | 428-A |
| 3/4 | 10 | 3 1/4 | 3 3/4 | 1 1/2 | 1 1/4 | 2631-A |
| 3/4 | 10 | 4 1/2 | | 2 | 1 7/8 | 1D986 |
| 3/4 | 10 | 4 1/2 | | 2 | 1 7/8 | 1D986 |
| 1 | 14 | 3 3/8 | 6 5/8 | 1 5/16 | 1 3/16 | 3449-A |
| 1 | 14 | 3 3/8 | 19 1/8 | 1 5/16 | 1 3/16 | 3450-A |

# CATERPILLAR STANDARDS

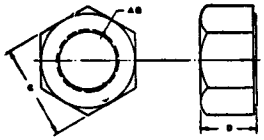

## NUTS—SPECIAL HEX.

Page No. 22 Issue No. 5 Date 6-1-43

| A | C | C | D | PART NUMBER | | |
|---|---|---|---|---|---|---|
| | | | | Standard | Special Heat Treat | Brass |
| 1/4 | 20 | 7/16 | 7/32 | 1B4330 | | |
| | 20 | 7/16 | 5/32 | 1B4427 | | |
| | 28 | 7/16 | 7/32 | 1B4201 | | |
| 5/16 | 18 | 1/2 | 17/64 | 1D4716 | | |
| | 18 | 1/2 | 5/16 | 5B3180 | | |
| | 18 | 19/32 | 5/16 | | | 1B5354 |
| | 24 | 1/2 | 17/64 | 1B4202 | | |
| | 24 | 1/2 | 5/16 | 1A8285 | | |
| 3/8 | 16 | 9/16 | 21/64 | 1D4717 | | |
| | 16 | 9/16 | 7/32 | 1B2578 | | |
| | 16 | 11/16 | 3/8 | | | 1B5355 |
| | 24 | 9/16 | 21/64 | 1B4203 | | 61339 |
| | 24 | 9/16 | 17/32 | 1B4431 | | |
| | 24 | 9/16 | 5/16 | T-560 | | |
| | 24 | 9/16 | 7/32 | 5B9079 | | |
| | 24 | 9/16 | 1/4 | 2A5351 | | |
| | 24 | 9/16 | 1 | 6B4840 | | |
| | 24 | 1 | 5/8 | 7B2710 | | |
| 7/16 | 14 | 5/8 | 3/8 | 1D4718 | | |
| | 14 | 5/8 | 1/4 | 1B4428 | | |
| | 14 | 7/8 | 7/16 | | | 1B5356 |
| | 20 | 5/8 | 3/8 | 1B4204 | | |
| | 20 | 5/8 | 1/4 | 5B3254 | | 1B5538 |
| | 20 | 5/8 | 39/64 | 2B5483 | | |
| 1/2 | 13 | 3/4 | 7/16 | 1D4719 | 1F7958 | |
| | 13 | 3/4 | 5/16 | 1D5117 | | |
| | 13 | 7/8 | 1/2 | | | 1B5357 |
| | 20 | 3/4 | 7/16 | 1B4205 | 6B6684 | 61315 |
| | 20 | 3/4 | 11/16 | 1B4432 | 5B690 | |
| | 20 | 3/4 | 5/16 | 1B4430 | | |
| | 20 | 3/4 | 1/4 | L-1013 | | |
| | 20 | 1 1/8 | 3/16 | 3B1028 | | |

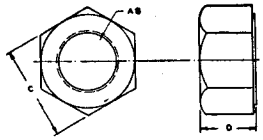


# CATERPILLAR STANDARDS

## NUTS—SPECIAL HEX. (CONT.)



| A | B | C | D | PART NUMBER | | |
|---|---|---|---|---|---|---|
| | | | | Standard | Special Heat Treat | Brass |
| 9/16 | 18 | 7/8 | 1/2 | 2B1940 | | |
| | 18 | 7/8 | 3/4 | 2B9512 | | |
| | 18 | 7/8 | 5/16 | 5B2183 | | |
| | 18 | 3/4 | 5/16 | 2A4122 | | |
| 5/8 | 11 | 15/16 | 9/16 | 1D4720 | | |
| | 11 | 15/16 | 3/8 | 1D5118 | | |
| | 11 | 1 1/16 | 5/8 | | | 1B5358 |
| | 18 | 15/16 | 35/64 | 1B4206 | 6B6683 | |
| | 18 | 1 1/8 | 3/8 | | | 7B3769 |
| | 18 | 15/16 | 27/32 | 1B4433 | 5B634 | |
| | 18 | 15/16 | 3/8 | 2986-A | | |
| | 18 | 15/16 | 5/16 | 1B9982 | | |
| | 18 | 15/16 | 1 1/16 | 2F1003 | | |
| | 18 | 1 1/8 | 13/16 | 3B1023 | | |
| 3/4 | 10 | 1 1/8 | 21/32 | 1B4331 | 1F7959 | |
| | 10 | 1 1/8 | 7/16 | 1D5119 | | |
| | 16 | 1 1/8 | 21/32 | 1B4207 | 6B6682 | |
| | 16 | 1 1/8 | 1 | 1B4434 | 5B635 | |
| | 16 | 1 1/8 | 7/16 | 1D5120 | | |
| | 16 | 1 1/8 | 5/16 | 5B1484 | | |
| 7/8 | 9 | 1 5/16 | 25/32 | 1B4382 | | |
| | 9 | 1 1/4 | 5/16 | 8B6672 | | |
| | 14 | 1 5/16 | 49/64 | 1B4208 | 1A5666 | |
| | 14 | 1 5/16 | 1/2 | 1D5121 | | |
| | 14 | 1 5/16 | 1 5/32 | 1B4435 | 5B636 | |
| | 14 | 1 1/4 | 1 5/32 | 2765-A | | |
| 31/32 | 14 | 1 5/16 | 5/16 | 1A8744 | | |
| 1 | 8 | 1 1/2 | 7/8 | 1B4333 | | |
| | 8 | 1 1/2 | 9/16 | 1D6306 | | |
| | 8 | 1 5/8 | 1 1/2 | S-2312 | | |
| | 14 | 1 1/2 | 7/8 | 1B4209 | 1A1935 | |
| | 14 | 1 1/2 | 1 5/16 | 1B4436 | 5B637 | |
| | 14 | 1 1/2 | 1/2 | L-1017 | | |
| | 14 | 1 5/16 | 1 1/8 | | | 1D4291 |
| | 14 | 1 1/2 | 3/8 | 2A4248 | | |

# CATERPILLAR STANDARDS

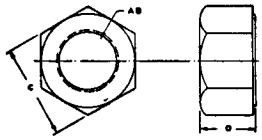

## NUTS—SPECIAL HEX. (CONT.)

Page No. 24 Issue No. 4 Date 6-1-43

| A | B | C | D | PART NUMBER | | |
|---|---|---|---|---|---|---|
| | | | | Standard | Special Heat Treat | Brass |
| 1 1/8 | 7 | 1 11/16 | 1 | 53114 | | |
| | 12 | 1 11/16 | 1 | 3B5753 | | |
| | 12 | 1 11/16 | 5/8 | L-702 | | |
| | 12 | 1 11/16 | 7/16 | 791-A | | |
| | 12 | 1 1/2 | 5/16 | 5B6565 | | |
| 1 3/16 | 12 | 1 11/16 | 5/8 | T-615 | | |
| 1 1/4 | 7 | 1 7/8 | 1 3/32 | 1B4334 | | |
| | 7 | 1 7/8 | 5/8 | 2B2571 | | |
| | 12 | 1 7/8 | 1 3/32 | 1B4210 | | |
| | 12 | 1 7/8 | 1 3/4 | 1A3134 | | |
| | 12 | 2 | 5/8 | 2A1341 | | |
| | 12 | 2 | 3/4 | 145-A | | |
| | 12 | 1 7/8 | 3/4 | 1A4168 | | |
| | 12 | 1 7/8 | 13/32 | 1F9427 | | |
| | 12 | 1 7/8 | 5/8 | 112071 | | |
| 1 3/8 | 6 | 2 3/16 | 1 3/8 | 1B4426 | | |
| | 12 | 2 3/8 | 5/8 | 8B2468 | | |
| | 12 | 2 | 3/4 | S-49 | | |
| | 12 | 1 7/8 | 1 1/2 | L-1018 | | |
| | 12 | 2 1/16 | 5/8 | V-264 | | |
| | 12 | 2 1/4 | 7/8 | 2B8828 | | |
| 1 1/2 | 6 | 2 1/4 | 1 5/16 | 53117 | | |
| | 6 | 2 1/4 | 5/8 | 1D55 | | |
| | 12 | 2 1/4 | 1 5/16 | 1B7413 | | |
| | 12 | 2 1/4 | 3/4 | 1D5128 | | |
| | 12 | 2 1/4 | 19/32 | L-701 | | |
| | 12 | 2 1/4 | 7/8 | 1A3585 | | |
| | 12 | 2 5/8 | 19/32 | L-2341 | | |
| | 12 | 2 1/4 | 3/8 | 2A3429 | | |

# CATERPILLAR STANDARDS

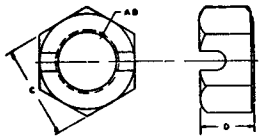

## NUTS—SLOTTED HEX.

Page No. 25 Issue No. 5 Date 6-1-43

| NATIONAL FINE (S.A.E.) | | | | | NATIONAL COARSE (U.S.S.) | | | | |
|---|---|---|---|---|---|---|---|---|---|
| A | B | C | D | Part Number | A | B | C | D | Part Number |
| 5/16 | 24 | 1/2 | 3/8 | 2A3438 | 3/8 | 16 | | | 53124 |
| 7/16 | 20 | 5/8 | 39/64 | T-26 | 5/8 | 11 | | | 53128 |
| 7/16 | 20 | 5/8 | 39/64 | 3B1999 | 3/4 | 10 | | | 53129 |
| 1/2 | 20 | 3/4 | 7/16 | T-887 | 7/8 | 9 | 1 5/16 | 7/8 | 1D5102 |
| 1/2 | 20 | 3/4 | 11/16 | L-160 | 7/8 | 9 | 1 5/16 | 1 5/32 | 1A5667 |
| 1/2 | 20 | 3/4 | 9/16 | 3B2474 | 1 | 8 | 1 1/2 | 1 1/2 | 1A1905 |
| 9/16 | 18 | 7/8 | 49/64 | S-1551 | 1 | 8 | 1 1/2 | 7/8 | 1B7411 |
| 9/16 | 18 | 7/8 | 5/8 | 2A3611 | 1 1/8 | 7 | 1 11/16 | 1 | 1D7020 |
| 5/8 | 18 | 15/16 | 27/32 | 2579A | 1 1/4 | 7 | 2 | 1 9/16 | 2779A |
| 5/8 | 18 | 15/16 | 1/2 | 3B6734 | 1 3/8 | 6 | 2 1/2 | 1 1/4 | 3B2199 |
| 11/16 | 16 | 1 | 15/16 | 1A5660 | 1 1/2 | 6 | 2 1/4 | 1 5/16 | 1D5101 |
| 3/4 | 16 | 1 1/16 | 1/2 | 119751 | 1 5/8 | 5 1/2 | | | 53136 |
| 3/4 | 16 | 1 1/16 | 1 | 2580A | 1 3/4 | 5 | 2 5/8 | 1 1/2 | 2B2673 |
| 3/4 | 16 | 1 1/16 | 21/32 | 61040 | 2 | 4 1/2 | 3 | 2 | 1D5100 |
| 3/4 | 16 | 1 1/8 | 1 | 2A3594 | | | | | |
| 7/8 | 14 | 1 5/16 | 1 5/32 | 6B6162 | | | | | |
| 1 | 14 | 1 7/16 | 1/2 | 3B5412 | | | | | |
| 1 | 14 | 1 1/2 | 7/8 | 1D1337 | | | | | |
| 1 | 14 | 1 1/2 | 7/16 | 110630 | | | | | |
| 1 | 14 | 1 1/2 | 7/8 | 111163 | | | | | |
| 1 | 14 | 1 1/2 | 1 | R-125 | | | | | |
| 1 | 14 | 1 1/2 | 9/16 | 1A6348 | | | | | |
| 1 1/8 | 12 | 1 11/16 | 3/4 | 1D906 | | | | | |
| 1 1/8 | 12 | 1 11/16 | 13/16 | 4B3472 | | | | | |
| 1 1/4 | 12 | 1 7/8 | 1 3/4 | 1A3134 | | | | | |
| 1 1/4 | 12 | 1 7/8 | 7/8 | 2B119 | | | | | |
| 1 1/4 | 12 | 1 7/8 | 5/8 | 3B3163 | | | | | |
| 1 1/4 | 12 | 1 7/8 | 1 | 112128 | | | | | |
| 1 1/4 | 12 | 2 1/4 | 7/8 | 2B5790 | | | | | |
| 1 1/2 | 12 | 2 1/4 | 11/16 | 3055A | | | | | |
| 1 7/8 | 12 | 2 3/4 | 13/16 | 2B8332 | | | | | |
| 2 | 12 | 3 | 7/8 | 2B286 | | | | | |
| 2 | 12 | 3 | 1 | 3054A | | | | | |
| 1 5/8 | 12 | 2 1/2 | 1 1/2 | 8B937 | | | | | |
| 1 5/8 | 12 | 2 1/16 | 11/16 | 6B5228 | | | | | |
| 1 1/8 | 12 | 1 11/16 | 5/8 | 8B1002 | | | | | |

# CATERPILLAR STANDARDS

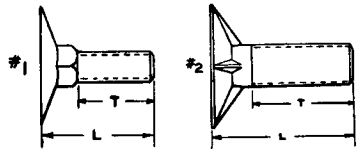


## BOLTS—ELEVATOR



| No. 1 ¼-20 N.C. | | | | | | No. 2 ¼-20 N.C. | | | | | | | | | | | |
|---|---|---|---|---|---|---|---|---|---|---|---|---|---|---|---|---|---|
| L | T | Part No. | L | T | Part No. | L | T | Part No. | L | T | Part No. | L | T | Part No. | L | T | Part No. |
| ¾ | 9/16 | 1B9707 | | | | ⅝ | ½ | 1B7404 | | | | | | | | | |
| ⅞ | 9/16 | 1B9706 | | | | ⅞ | ⅝ | 1D5420 | | | | | | | | | |
| 1 | 11/16 | 1B7649 | | | | 1 | ¾ | 2B2907 | | | | | | | | | |
| | | | | | | 1 | 11/16 | 2B7116 | | | | | | | | | |

# CATERPILLAR STANDARDS

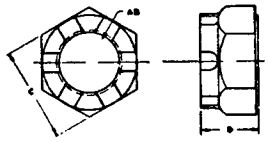

## NUTS—CASTELLATED HEX. NATIONAL FINE (S.A.E.)



| A | B | C | D | Part Number | A | B | C | D | Part Number |
|---|---|---|---|---|---|---|---|---|---|
| 1/4 | 28 | 7/16 | 9/32 | 2B3172 | | | | | |
| 5/16 | 24 | 1/2 | 21/64 | 1B4437 | | | | | |
| 7/16 | 20 | 5/8 | 49/64 | 53167 | | | | | |
| 3/8 | 24 | 9/16 | 13/32 | 1A8294* | | | | | |
| 3/8 | 24 | 9/16 | 13/32 | 1B4442 | | | | | |
| 1/2 | 20 | 3/4 | 9/16 | 1B4441 | | | | | |
| 1/2 | 20 | 3/4 | 9/16 | 61277* | | | | | |
| 5/8 | 18 | 15/16 | 23/32 | 1B4440 | | | | | |
| 3/4 | 16 | 1 1/8 | 13/16 | 1B4439 | | | | | |
| 7/8 | 14 | 1 5/16 | 29/32 | 1B4438 | | | | | |
| 7/8 | 14 | 1 1/4 | 29/32 | 21159 L.H. | | | | | |
| 1 | 14 | 1 1/2 | 1 | 1B4443 | | | | | |
| 1 | 14 | 2 | 1 | S-1758 | | | | | |
| 1 1/8 | 12 | 1 11/16 | 1 5/32 | 1B4518 | | | | | |
| 1 1/4 | 12 | 1 7/8 | 15/16 | 2244-A | | | | | |
| 1 1/4 | 12 | 1 7/8 | 1 1/4 | 1B4444 | | | | | |
| 1 3/8 | 12 | 2 | 1 13/32 | 53177 | | | | | |
| 1 1/2 | 12 | 2 1/4 | 1 1/2 | 1B4445 | | | | | |

*Special heat treat.

L.H.—Left-hand thread.

Printed in U. S. A.

# CATERPILLAR STANDARDS

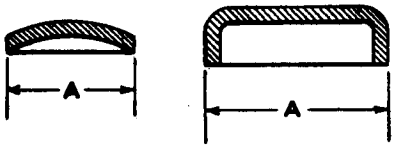


## PLUGS—WELCH AND CORE



| WELCH | | CORE | |
|---|---|---|---|
| A | Part No. | A | Part No. |
| 5/8 | S-598 | 1/2 | L-1026 |
| 3/4 | S-599 | 9/16 | T-200 |
| 15/16 | 8882 | 21/32 | L-1022 |
| 7/8 | 10348 | 25/32 | 3B622 |
| 1 | 12562 | 7/8 | 1A4672 |
| 1 1/4 | 110044 | 1 | 3B623 |
| 1 3/8 | 7775 | 1 1/16 | L-1521 |
| 1 1/2 | 50073 | 1 1/4 | 3B645 |
| 1 5/8 | 1D68 | 1 5/16 | L-2288 |
| 1 7/8 | 13661 | 1 1/2 | 2651A |
| 2 | 9025 | 1 5/8 | 1A695 |
| 2 1/2 | 52484 | 1 3/4 | L-1021 |
| 2 3/4 | 50276 | 1 7/8 | T-199 |
| 3 | 50044 | 2 1/4 | L-1024 |
| | | 2 3/8 | 1A2358 |
| | | 2 5/8 | 2A998 |
| | | 2 7/8 | S-519 |
| | | 3 1/2 | 2B6858 |

# CATERPILLAR STANDARDS

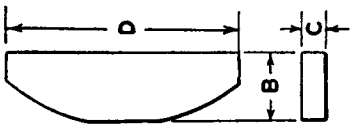


KEYS—WOODRUFF



| Key No. | A | B | C | Caterpillar No. | Key No. | D | B | C | Caterpillar No. |
|---|---|---|---|---|---|---|---|---|---|
| 212 | 3/8 | .167 / .172 | 5/32 | 1B8735 | 126 | 1.370 / 1.380 | .390 / .396 | 5/16 | 1B8729 |
| 2 | 1/2 | .187 / .193 | 5/32 | 1B8701 | 127 | 1.370 / 1.380 | .390 / .396 | 1/4 | 1B8730 |
| 3 | 1/2 | .187 / .193 | 1/8 | 1B8702 | 128 | 1.370 / 1.380 | .390 / .396 | 5/16 | 1B8731 |
| 4 | 5/8 | .234 / .240 | 5/32 | 1B8703 | 129 | 1.370 / 1.380 | .390 / .396 | 3/8 | 1B8732 |
| 5 | 5/8 | .234 / .240 | 1/8 | 1B8704 | 28 | 1.713 / 1.723 | .515 / .521 | 5/16 | 1B8724 |
| 6 | 5/8 | .234 / .240 | 5/32 | 1B8705 | 29 | 1.713 / 1.723 | .515 / .521 | 3/8 | 1B8725 |
| 61 | 5/8 | .234 / .240 | 5/16 | 1B8728 | SX | 1.990 / 2.000 | .578 / .584 | 5/16 | 1B8742 |
| 7 | 3/4 | .296 / .302 | 1/8 | 1B8706 | TX | 1.990 / 2.000 | .578 / .584 | 3/8 | 1B8744 |
| 8 | 3/4 | .296 / .302 | 5/32 | 1B8707 | UX | 1.990 / 2.000 | .578 / .584 | 7/16 | 1B8747 |
| 9 | 3/4 | .296 / .302 | 5/16 | 1B8708 | VX | 1.990 / 2.000 | .578 / .584 | 1/2 | 1B8746 |
| 10 | 7/8 | .359 / .365 | 5/32 | 1B8709 | T | 2.307 / 2.317 | .734 / .740 | 3/8 | 1B8743 |
| 11 | 7/8 | .359 / .365 | 5/16 | 1B8710 | V | 2.307 / 2.317 | .734 / .740 | 1/2 | 1B8745 |
| 12 | 7/8 | .359 / .365 | 7/32 | 1B8711 | 32 | 2.870 / 2.880 | .921 / .927 | 1/2 | 1B8726 |
| A | 7/8 | .359 / .365 | 1/4 | 1B8736 | 34 | 2.870 / 2.880 | .921 / .927 | 5/8 | 1B8727 |
| 13 | 1 | .421 / .427 | 5/16 | 1B8712 | 91 | | | | 2B9373 |
| 14 | 1 | .421 / .427 | 7/32 | 1B8713 | 211 | | | | 3B2098 |
| 15 | 1 | .421 / .427 | 1/4 | 1B8714 | | | | | |
| 152 | 1 | .421 / .427 | 3/8 | 1B8734 | | | | | |
| 141 | 1 | .359 / .365 | 1/4 | 1B8733 | | | | | |
| 16 | 1 1/8 | .468 / .474 | 5/16 | 1B8715 | | | | | |
| 18 | 1 1/8 | .468 / .474 | 1/4 | 1B8716 | | | | | |
| C | 1 1/8 | .468 / .474 | 5/16 | 1B8737 | | | | | |
| 19 | 1 1/4 | .531 / .537 | 5/16 | 1B8717 | | | | | |
| 20 | 1 1/4 | .531 / .537 | 7/32 | 1B8718 | | | | | |
| 21 | 1 1/4 | .531 / .537 | 1/4 | 1B8719 | | | | | |
| D | 1 1/4 | .531 / .537 | 5/16 | 1B8738 | | | | | |
| E | 1 1/4 | .531 / .537 | 3/8 | 1B8739 | | | | | |
| 22 | 1 3/8 | .578 / .584 | 1/4 | 1B8720 | | | | | |
| 23 | 1 3/8 | .578 / .584 | 5/16 | 1B8721 | | | | | |
| F | 1 3/8 | .578 / .584 | 3/8 | 1B8740 | | | | | |
| 24 | 1 1/2 | .625 / .631 | 1/4 | 1B8722 | | | | | |
| 25 | 1 1/2 | .625 / .631 | 5/16 | 1B8723 | | | | | |
| G | 1 1/2 | .625 / .631 | 3/8 | 1B8741 | | | | | |

**Note: These keys are all special steel and heat treated.**

Printed in U. S. A.

# CATERPILLAR STANDARDS



## BUSHINGS—REDUCING

| Size | Part No. |
|---|---|
| ¼" x ⅛" x 1⅛" Long | 2B3018 |
| ¼" x ⅛" x ⅝" Long | 3B7256 |
| ⅜" x ⅛" x ¾" Long | 3B7721 |
| ⅜" x ¼" x ⅝" Long | 3B7722 |
| ½" x ⅛" | 5B763 |
| ½" x ¼" | 6B5072 |
| ½" x ⅜" | 3B7255 |
| ¾" x ⅛" | 7B2176 |
| ¾" x ⅜" | 6B4661 |
| ¾" x ½" | 3B7723 |
| 1" x ¼" | 3B7724 |
| 1" x ⅜" | 3B7254 |
| 1" x ½" | 5B4855 |
| 1" x ¾" | 6B9081 |
| 1¼" x 1" | 3B7257 |
| 1½" x 1¼" | 3B7253 |
| 2" x 1½" | 5B7660 |
| 2½" x 2" | 3B7252 |

## CAPS

| | |
|---|---|
| ⅛" | 3B7725 |
| ¼" | 3B6483 |
| ⅜" | 56451 |
| ½" | 3B6484 |
| ¾" | 3B6485 |
| 1" | 3B6486 |
| 1¼" | 3B7726 |

## COUPLINGS

| | |
|---|---|
| ⅛" | 3B6487 |
| ¼" | 3B6488 |
| ⅜" | 5B1309 |
| ½" | 3B6489 |
| ¾" | 3B6490 |
| 1" | 3B6491 |
| 1½" | 3B6492 |
| 2" | 3B7826 |
| 2" (*) | 3B7258 |
| 2½" | 7B9952 |
| 3½" | 8B1310 |

## COUPLINGS—REDUCING

| Size | Part No. |
|---|---|
| ¼" x ⅛" | 3B7719 |
| ¼" x ⅜" | 5B6009 |
| ⅜" x ⅛" | 3B7720 |
| ⅜" x ¼" | 5B8001 |
| 2" x 1" | 4B1531 |

## ELBOW 45°

| | |
|---|---|
| ⅛" | 3B6493 |
| ¼" | 3B7727 |
| ½" | 3B6497 |
| ¾" | 3B7728 |
| 1" | 4B9030 |

## ELBOW 90°

| | |
|---|---|
| ⅛" | 3B6494 |
| ¼" | 3B7729 |
| ⅜" | 3B6495 |
| ½" | 3B6496 |
| ¾" | 4B5984 |
| 1" | 3B6498 |
| 1¼" | 3B6499 |
| 1½" | 6B3685 |
| 2" | 3B6500 |
| 2½" | 4B5089 |
| 3" | 7B5734 |

## ELBOW STREET 45°

| | |
|---|---|
| ¼" | 3B7730 |
| ½" | 3B7731 |
| ¾" | 3B7732 |

## ELBOW STREET 90°

| | |
|---|---|
| ⅛" | 3B6552 |
| ¼" | 3B6553 |
| ⅜" | 4B6067 |
| ½" | 3B7259 |
| ¾" | 3B6554 |

## ELBOW STREET 90° (Cont.)

| Size | Part No. |
|---|---|
| 1" | 3B6555 |
| 1¼" | 3B6556 |
| 1½" | 5B7666 |
| 2" | 7B7138 |

## TEE

| | |
|---|---|
| ¼" | 8B1261 |
| ⅜" | 6B2982 |
| ½" | 5B8979 |
| 1" | 4B7770 |
| 1¼" | 8B9579 |

## REDUCING TEE

| | |
|---|---|
| ½" x ⅜" x ¼" | 4B9891 |
| 1" x 1" x ½" | 7B7905 |
| 1¼" x 1¼" x ½" | 4B7107 |
| 1" x 1" x 1½" | 7B5233 |
| 1¼" x ½" x 1¼" | 4B4062 |

## UNION

| | |
|---|---|
| ¾" | 6B1667 |
| 1" | 5B7640 |
| 1½" | 5B7639 |

## NIPPLES

| | |
|---|---|
| ⅛" x ¼" (c) | 3B7264 |
| ⅛" x 1¼" | 8B2283 |
| ⅛" x 1½" (s) | 3B7733 |
| ⅛" x 1¾" (**) | 1B2989 |
| ⅛" x 2" | 3B7263 |
| ⅛" x 2½" | 3B7285 |
| ⅛" x 2¾" | 3B7283 |
| ⅛" x 3¼" | 6B66 |
| ⅛" x 3½" | 7B8427 |
| ⅛" x 3⅝" | 2B3324 |
| ⅛" x 3½" | 3B7734 |
| ⅛" x 4" | 2683-A |
| ⅛" x 4⅛" (**) | 4B8103 |

(*) Extra Heavy (**) Threaded one end only (c) Close (s) Short

# CATERPILLAR STANDARDS

## FITTINGS—PIPE STD., MALL., IRON, (BLACK)



| NIPPLES (Cont.) | |
|---|---|
| Size | Part No. |
| 1/8" x 4 3/4" (**) | 6B1474 |
| 1/8" x 5" | 3B7736 |
| 1/8" x 5 1/4" (**) | 1A3456 |
| 1/8" x 5 5/8" | 1B3427 |
| 1/8" x 6" | 3B7282 |
| 1/8" x 6 7/16" | 1A1312 |
| 1/8" x 10" | 3B7737 |
| 1/4" x 1/8" (c) | 3B7738 |
| 1/4" x 1 1/4" | 3B7739 |
| 1/4" x 1 1/2" (s) | 3B7262 |
| 1/4" x 1 5/8" (**) | 2B2015 |
| 1/4" x 1 5/8" | 1B6685 |
| 1/4" x 2" (**) | 2B2326 |
| 1/4" x 2" | 3B7276 |
| 1/4" x 2 1/4" | 3B7261 |
| 1/4" x 2 1/2" | 3B7275 |
| 1/4" x 2 11/16" | 5B7449 |
| 1/4" x 2 3/4" | 7B1479 |
| 1/4" x 3 1/2" | 3B7274 |
| 1/4" x 3 5/8" (**) | 1A4247 |
| 1/4" x 4" | 3B7273 |
| 1/4" x 4 5/8" | M-12253 |
| 1/4" x 4 3/4" | 5B7442 |
| 1/4" x 6" | 3B7740 |
| 1/4" x 6 11/16" | 2B8547 |
| 3/8" x 1" (c) | 3B7741 |
| 3/8" x 1 7/16" (**) | 3B8678 |
| 3/8" x 1 1/2" (s) | 3B7742 |
| 3/8" x 2" | 5B1311 |
| 3/8" x 2 3/8" (**) | 5B1310 |
| 3/8" x 2 1/2" | 6B7464 |
| 3/8" x 3 1/8" | 6B7465 |
| 3/8" x 5 1/2" | 3B7743 |
| 3/8" x 6 1/16" | 5B6974 |
| 3/8" x 8" (**) | 60772 |
| 1/2" x 1 1/8" (**) | 3B7744 |
| 1/2" x 1 1/4" (**) | 6B8844 |
| 1/2" x 1 5/16" | 2443-A |
| 1/2" x 1 1/2" (s) | 3B7284 |
| 1/2" x 1 3/4" | 6B7736 |
| 1/2" x 2" | 3B7866 |
| 1/2" x 2" (**) | 5B8980 |
| 1/2" x 2 1/2" | 3B7289 |
| 1/2" x 3" | 3B7272 |
| 1/2" x 3" (**) | 5B7316 |
| 1/2" x 3 3/4" | 5B7319 |

| NIPPLES (Cont.) | |
|---|---|
| Size | Part No. |
| 1/2" x 4" | 3B7271 |
| 1/2" x 4 1/4" | 6B3104 |
| 1/2" x 5" (**) | 7B766 |
| 1/2" x 5 1/2" | 2B3470 |
| 1/2" x 6 3/4" | 6B5853 |
| 1/2" x 7 1/8" | 5B1122 |
| 1/2" x 7 3/8" | 7B3893 |
| 1/2" x 7 3/4" (**) | 7B765 |
| 1/2" x 8 5/8" | 7B3892 |
| 3/4" x 11/16" | 17706 |
| 3/4" x 1 3/8" (c) | 3B7745 |
| 3/4" x 1 3/4" | 5B9892 |
| 3/4" x 2" (s) | 3B7270 |
| 3/4" x 2 1/2" | 3B7746 |
| 3/4" x 2 5/8" | 7B3897 |
| 3/4" x 3" | 3B7267 |
| 3/4" x 3 1/4" (**) | 5B4536 |
| 3/4" x 3 1/4" | 7B3801 |
| 3/4" x 3 1/2" | 3B7747 |
| 3/4" x 3 1/2" | 7B3896 (**) |
| 3/4" x 4 1/4" | 8B3024 |
| 3/4" x 5" | 3B7266 |
| 3/4" x 5 3/8" | 7B4494 |
| 3/4" x 6" | 3B7265 |
| 3/4" x 6 1/2" | 3B2563 |
| 3/4" x 7 1/4" | 6B897 |
| 3/4" x 7 1/2" | 8B2699 |
| 3/4" x 7 3/4" | 5B4032 |
| 3/4" x 9 1/8" | 1B2871 |
| 3/4" x 10" | 4B9619 |
| 1" x 1 1/2" (c) | 3B7749 |
| 1" x 1 3/4" | 7B7169 |
| 1" x 2" (s) | 3B7280 |
| 1" x 2 1/2" | 6B8128 |
| 1" x 3" (**) | 5B6640 |
| 1" x 3" | 6B8129 |
| 1" x 3 1/2" | 4B9029 |
| 1" x 3 1/2" (**) | 4B7787 |
| 1" x 4" | 6B3156 |
| 1" x 4 1/4" | 7B7908 |
| 1" x 4 9/16" (**) | 7B3464 |
| 1" x 5 1/4" | 6B8131 |
| 1" x 5 1/2" | 3B3361 |
| 1" x 5 5/8" | 7B9313 |
| 1" x 6" | 7B9008 |

| NIPPLES (Cont.) | |
|---|---|
| Size | Part No. |
| 1" x 6 1/2" | 3B2784 |
| 1" x 6 1/2" (**) | 6B9332 |
| 1" x 6 3/4" (**) | 6B4793 |
| 1" x 6 3/4" | 6B4792 |
| 1" x 7 1/2" | 6B3155 |
| 1" x 8 1/8" | 7B1521 |
| 1" x 9 23/32" (**) | 7B3451 |
| 1" x 10" | 6B7150 |
| 1 1/4" x 1 5/8" (c) | 3B7750 |
| 1 1/4" x 2 7/16" (**) | 5B6868 |
| 1 1/4" x 2 1/2" (s) | 4B4609 |
| 1 1/4" x 3" (**) | 4B4520 |
| 1 1/4" x 3" | 3B7277 |
| 1 1/4" x 5 1/4" | 2490-A |
| 1 1/4" x 8 3/4" | 3B7751 |
| 1 1/4" x 9 1/16" | 1A963 |
| 1 1/4" x 9 5/8" | 7B1771 |
| 1 1/2" x 1 3/4" | 5B7661 |
| 1 1/2" x 3" (**) | 5B9405 |
| 1 1/2" x 3 1/4" (**) | 6B1729 |
| 1 1/2" x 3 3/8" | 5B7642 |
| 1 1/2" x 4 1/2" | 5B7643 |
| 1 1/2" x 5 3/4" | 6B1728 |
| 1 1/2" x 9" | 7B497 |
| 1 1/2" x 9 5/8" | 7B1771 |
| 2" x 2" (c) | 3B7296 |
| 2" x 2 1/2" (s) | 3B7281 |
| 2" x 3" | 2B7286 |
| 2" x 3 5/8" (**) | 4B2694 |
| 2" x 3 5/8" | 7B6165 |
| 2" x 4" | 7B5856 |
| 2" x 4 1/2" | 3B7752 |
| 2" x 4 3/4" | T-01506 |
| 2" x 5 1/8" | 7B5855 |
| 2" x 7 3/4" | L-1492 |
| 2" x 9 1/4" (**) | 7B5831 |
| 2 1/2" x 2 1/2" (c) | 3B7753 |
| 2 1/2" x 5" | 3B7269 |
| 2 1/2" x 7" | 1A8983 |
| 2 1/2" x 8" | 3B7268 |
| 2 1/2" x 8 1/2" (**) | 1B7774 |
| 3" x 3" (s) | 7B5733 |
| 3" x 3 1/2" | 5B6729 |
| 3" x 9 1/4" (**) | 5B322 |
| 4" x 4 5/16" (**) | 5B352 |

(**) Threaded one end only (c) Close (s) Short

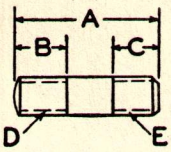


# CATERPILLAR STANDARDS

## STUDS, N.C. AND N.F.



### 1/4

| A | B | C | D | E | Part No. |
|---|---|---|---|---|---|
| 13/16 | 5/16 | 3/8 | 28 | 20 | 3B4423 |
| 15/16 | 3/8 | 3/8 | 28 | 20 | 3B445 |
| 1 | 7/16 | 3/8 | 28 | 20 | L-1404 |
| 1 1/16 | 7/16 | 3/8 | 28 | 20 | 1B9891 |
| 1 3/16 | 7/16 | 3/8 | 28 | 20 | 4B4184 |
| 1 1/4 | 3/4 | 3/8 | 20 | 20 | 3B5542 |
| 2 3/8 | 7/16 | 3/8 | 28 | 20 | 7B5794 |
| 4 1/8 | 7/16 | 3/8 | 28 | 28 | 3B6751 |
| 4 1/8 | 1 1/16 | 5/16 | 28 | 28 | 5B1825 |
| 4 1/4 | 1 | 3/8 | 28 | 20 | 1A2093 |

### 5/16

| A | B | C | D | E | Part No. |
|---|---|---|---|---|---|
| 13/16 | 7/16 | 5/16 | 18 | 18 | 6B4579 |
| 1 | 1/2 | 5/16 | 24 | 18 | 2A3804 |
| 1 1/8 | 1/2 | 3/8 | 24 | 18 | 2A3338 |
| 1 1/8 | 15/32 | 15/32 | 24 | 18 | 4B2612 |
| 1 1/4 | 9/16 | 3/8 | 18 | 18 | 1A7462 |
| 1 1/4 | 3/4 | 3/8 | 18 | 18 | 7B9752 |
| 1 5/16 | 1/2 | 7/16 | 24 | 18 | 1A2850 |
| 1 3/8 | 5/8 | 3/8 | 24 | 18 | 2A5794 |
| 1 1/2 | 5/8 | 3/8 | 24 | 18 | 2A5706 |
| 1 5/8 | 1/2 | 1/2 | 24 | 18 | 6B4938 |
| 1 11/16 | 1/2 | 1/2 | 24 | 18 | 3B5298 |
| 1 13/16 | 1/2 | 1/2 | 24 | 18 | 7B1863 |
| 2 | 5/8 | 1/2 | 24 | 18 | 2A3882 |
| 2 | 1 | 1/2 | 18 | 18 | 443-C |
| 2 3/8 | 5/8 | 15/32 | 24 | 18 | 4B8503 |
| 2 3/8 | 1/2 | 1/2 | 24 | 18 | 2A4711 |
| 2 1/2 | 5/8 | 3/8 | 24 | 18 | 7B5186 |
| 2 7/8 | 5/8 | 15/32 | 24 | 18 | 7B9193 |
| 3 3/4 | 5/8 | 3/8 | 24 | 18 | 2A5705 |
| 4 3/16 | 5/8 | 15/32 | 24 | 18 | 6B6470 |

### 3/8

| A | B | C | D | E | Part No. |
|---|---|---|---|---|---|
| 1 | 7/16 | 1/2 | 24 | 16 | T-101 |
| 1 15/32 | 7/16 | 3/8 | 24 | 16 | 2B8440 |
| 1 1/8 | 9/16 | 1/2 | 24 | 16 | L-1392 |
| 1 3/16 | 5/8 | 1/4 | 24 | 16 | L-1367 |
| 1 3/16 | 1/2 | 1/2 | 16 | 16 | S-750 |
| 1 1/4 | 5/8 | 3/8 | 16 | 16 | S-698 |

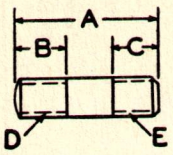


# CATERPILLAR STANDARDS

## STUDS, N.C. AND N.F.



| | ⅛ | | | | | |
|---|---|---|---|---|---|---|
| | A | B | C | D | E | Part No. |
| | 1 1/16 | 5/8 | 3/8 | 24 | 16 | 3B2460 |
| | 1 5/16 | 5/8 | 3/8 | 24 | 16 | B-222 |
| | 1 5/16 | 1/2 | 1/2 | 16 | 16 | 2B6296 |
| | 1 5/16 | 9/16 | 9/16 | 24 | 16 | T-398 |
| | 1 5/16 | 9/16 | 9/16 | 24 | 16 | 7B7115* |
| | 1 3/8 | 1/2 | 3/8 | 16 | 16 | 586-D |
| | 1 3/8 | 1/2 | 7/16 | 24 | 16 | B-362 |
| | 1 3/8 | 9/16 | 9/16 | 24 | 16 | L-659 |
| | 1 3/8 | 5/8 | 9/16 | 16 | 16 | T-170 |
| | 1 3/8 | 9/16 | 9/16 | 16 | 16 | 6B426 |
| | 1 7/16 | 1/2 | 5/8 | 24 | 16 | B-403 |
| | 1 7/16 | 5/8 | 1/2 | 24 | 16 | L-468 |
| | 1 7/16 | 5/8 | 1/2 | 16 | 16 | S-699 |
| | 1 1/2 | 1/2 | 9/16 | 24 | 16 | 1A7386† |
| | 1 1/2 | 5/8 | 3/8 | 24 | 24 | 1A699 |
| | 1 1/2 | 3/4 | 1/2 | 16 | 16 | 15214 |
| | 1 9/16 | 3/4 | 7/16 | 16 | 16 | S-532 |
| | 1 9/16 | 3/4 | 9/16 | 24 | 16 | 2A5349 |
| | 1 9/16 | 1/2 | 5/8 | 24 | 16 | B-344 |
| | 1 5/8 | 5/8 | 5/8 | 24 | 24 | 1A3279 |
| | 1 5/8 | 7/8 | 9/16 | 24 | 16 | L-2332 |
| | 1 3/4 | 5/8 | 7/16 | 24 | 24 | 1B6475 |
| | 1 3/4 | 5/8 | 5/8 | 16 | 16 | S-1916 |
| | 1 3/4 | 3/4 | 7/16 | 24 | 16 | 3378-A |
| | 1 3/4 | 5/8 | 9/16 | 24 | 16 | 2741-A |
| | 1 3/4 | 11/16 | 9/16 | 16 | 16 | L-765 |
| | 1 15/16 | 1/2 | 5/8 | 24 | 16 | B-404 |
| | 1 15/16 | 5/8 | 11/16 | 24 | 24 | L-1395 |
| | 2 | 5/8 | 7/16 | 24 | 24 | 1B8989 |
| | 2 | 5/8 | 1/2 | 24 | 16 | 8B7426 |
| | 2 | 1 | 1/2 | 16 | 16 | 458-D |
| | 2 1/16 | 5/8 | 7/16 | 24 | 24 | 2A1590 |
| | 2 1/8 | 5/8 | 5/8 | 16 | 16 | 2A671 |
| | 2 1/8 | 13/16 | 9/16 | 24 | 16 | 7B2335 |
| | 2 1/8 | 1 | 5/8 | 16 | 24 | 265-A |
| | 2 3/16 | 5/8 | 1 7/16 | 24 | 16 | 2B9830 |
| | 2 5/16 | 11/16 | 1/2 | 16 | 16 | S-700 |
| | 2 5/16 | 1 3/8 | 11/16 | 24 | 24 | L-1394 |
| | 2 1/4 | 3/4 | 9/16 | 24 | 16 | L-654 |
| | 2 1/4 | 3/4 | 5/8 | 16 | 16 | 4B8641 |
| | 2 5/16 | 1/2 | 3/8 | 24 | 16 | 7B8255 |
| | 2 5/16 | 5/8 | 9/16 | 24 | 16 | L-1029 |
| | 2 5/16 | 1 | 1/2 | 24 | 16 | 2A3346 |
| | 2 3/8 | 5/8 | 9/16 | 24 | 16 | 8B4521 |
| | 2 3/8 | 1 3/8 | 1/2 | 16 | 16 | S-373 |
| | 2 7/16 | 5/8 | 7/16 | 24 | 24 | 1A2616 |
| | 2 7/16 | 5/8 | 9/16 | 16 | 16 | 3B2523 |
| | 2 1/2 | 1/2 | 9/16 | 24 | 16 | B-107 |
| | 2 1/2 | 3/4 | 9/16 | 24 | 16 | 7B6874 |

*Brass. †Drilled End.

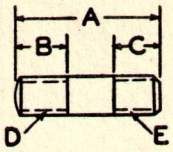


# CATERPILLAR STANDARDS

## STUDS, N.C. AND N.F.



| A | B | C | D | E | Part No. |
|---|---|---|---|---|---|
| 2 5/8 | 1/2 | 3/16 | 24 | 24 | 5B4857 |
| 2 5/8 | 1/2 | 7/16 | 24 | 16 | 4B5442 |
| 2 5/8 | 3/4 | 9/16 | 24 | 16 | 2A5350 |
| 2 11/16 | 7/16 | 5/8 | 24 | 24 | 2A2616 |
| 2 13/16 | 7/16 | 9/16 | 16 | 16 | 2B2471 |
| 2 13/16 | 3/4 | 9/16 | 24 | 16 | 2A5365 |
| 2 13/16 | 3/4 | 5/8 | 24 | 16 | 1C130 |
| 2 3/4 | 5/8 | 1/2 | 24 | 16 | 1B4418 |
| 2 3/4 | 5/8 | 9/16 | 24 | 16 | 5B9906 |
| 2 3/4 | 3/4 | 7/16 | 24 | 24 | 5B5690 |
| 2 7/8 | 1/2 | 1/2 | 24 | 24 | 5B8151 |
| 3 | 1/2 | 1/2 | 24 | 24 | 220-A |
| 3 | 3/4 | 9/16 | 24 | 16 | 5B5951 |
| 3 1/16 | 3/4 | 9/16 | 24 | 16 | 1A3273 |
| 3 1/16 | 9/16 | 9/16 | 24 | 16 | 2A3510 |
| 3 1/16 | 5/8 | 7/8 | 24 | 16 | 50219 |
| 3 1/16 | 7/8 | 9/16 | 24 | 16 | 5B8857 |
| 3 1/4 | 3/4 | 9/16 | 24 | 16 | 6B6489 |
| 3 5/16 | 5/8 | 9/16 | 16 | 16 | 6B3955 |
| 3 3/8 | 9/16 | 9/16 | 24 | 16 | 5B1756 |
| 3 3/8 | 3/4 | 9/16 | 24 | 16 | 5B1915 |
| 3 1/2 | 13/16 | 9/16 | 24 | 16 | 1C127 |
| 3 5/8 | 3/4 | 9/16 | 16 | 16 | 3B4589 |
| 3 5/8 | 3/4 | 9/16 | 24 | 16 | L-724 |
| 3 5/8 | 1 | 9/16 | 24 | 16 | 4B6730 |
| 3 13/16 | 5/8 | 9/16 | 24 | 16 | 2A3870 |
| 3 7/8 | 5/8 | 7/16 | 24 | 16 | B-104 |
| 3 7/8 | 3/4 | 9/16 | 16 | 16 | 6B5143 |
| 3 15/16 | 1 | 9/16 | 24 | 16 | 5B2384 |
| 4 1/16 | 5/8 | 1/2 | 24 | 16 | B-249 |
| 4 1/16 | 3/4 | 9/16 | 24 | 16 | 2A4791 |
| 4 1/16 | 1/2 | 3/16 | 24 | 24 | 5B8182 |
| 4 3/16 | 3/4 | 1/2 | 24 | 16 | 8B3380 |
| 4 3/16 | 3/4 | 9/16 | 24 | 16 | 6B2880 |
| 4 1/4 | 5/8 | 3/16 | 24 | 16 | 7B9220 |
| 4 5/16 | 3/4 | 9/16 | 16 | 16 | 6B7254 |
| 4 3/8 | 5/8 | 1/2 | 24 | 16 | L-1065 |
| 4 1/2 | 3/4 | 3/16 | 24 | 24 | 7B1641 |
| 4 1/2 | 3/4 | 5/8 | 24 | 16 | T-68 |
| 4 5/8 | 5/8 | 1/2 | 24 | 16 | 5B4992 |
| 4 3/4 | 3/4 | 1/2 | 24 | 16 | 7B6058 |
| 4 7/8 | 1 1/8 | 1/2 | 24 | 16 | B-250 |
| 4 15/16 | 3/4 | 9/16 | 24 | 16 | 5B9705 |
| 5 1/16 | 1 | 15/16 | 16 | 16 | T-551 |
| 5 1/16 | 3/4 | 9/16 | 24 | 16 | 9B865 |
| 5 1/4 | 5/8 | 1/2 | 24 | 16 | L-1064 |
| 5 3/8 | 1 | 1/2 | 16 | 16 | S-1728 |
| 5 1/2 | 3/4 | 1/2 | 24 | 16 | V-113 |
| 5 5/8 | 3/4 | 1/2 | 24 | 16 | 1A2222 |

# CATERPILLAR STANDARDS

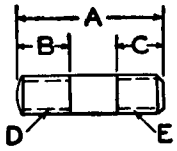


## STUDS, N.C. AND N.F.



½

| A | B | C | D | E | Part No. |
|---|---|---|---|---|---|
| 1 5/16 | 3/4 | 1/2 | 20 | 13 | 6B554 |
| 1 1/16 | 3/4 | 1/2 | 13 | 13 | S-752 |
| 1 5/8 | 5/8 | 3/4 | 20 | 13 | 8B8610 |
| 1 5/8 | 3/4 | 5/8 | 13 | 13 | 2430-A |
| 1 11/16 | 11/16 | 9/16 | 20 | 13 | 1B2730 |
| 1 3/4 | 3/4 | 5/8 | 20 | 13 | 1A6863 |
| 1 3/4 | 3/4 | 7/8 | 20 | 13 | 50289 |
| 1 7/8 | 11/16 | 3/4 | 20 | 13 | B-481 |
| 1 7/8 | 3/4 | 1/2 | 20 | 13 | 5B2649 |
| 1 7/8 | 3/4 | 3/4 | 13 | 13 | 1A1593 |
| 1 15/16 | 15/16 | 3/4 | 20 | 13 | L-187 |
| 2 | 13/16 | 9/16 | 20 | 13 | 4B8358 |
| 2 1/16 | 1 | 3/4 | 20 | 13 | L-797 |
| 2 1/16 | 3/4 | 1/2 | 13 | 13 | S-520 |
| 2 1/16 | 7/8 | 3/4 | 13 | 13 | 2966-A |
| 2 1/16 | 1 1/16 | 3/4 | 13 | 13 | 4B9922 |
| 2 1/16 | 1 1/16 | 3/4 | 13 | 13 | 2A5359** |
| 2 1/4 | 1 5/16 | 13/16 | 20 | 13 | R-152 |
| 2 1/4 | 3/4 | 3/4 | 20 | 13 | L-1166 |
| 2 5/16 | 7/8 | 31/32 | 20 | 20 | 1A4949 |
| 2 5/16 | 7/8 | 3/4 | 20 | 13 | 5B435 |
| 2 5/16 | 1 1/4 | 3/4 | 20 | 13 | 8B7897 |
| 2 5/8 | 3/4 | 1/2 | 13 | 13 | 219-A |
| 2 5/8 | 1 13/16 | 7/16 | 13 | 13 | S-975 |
| 2 1/2 | 1 | 3/4 | 20 | 13 | L-1704 |
| 2 3/4 | 1 | 3/4 | 20 | 13 | T-167 |
| 2 13/16 | 2 1/8 | 9/16 | 13 | 13 | 1829-A |
| 2 7/8 | 7/8 | 5/8 | 13 | 13 | 2355-A |
| 2 15/16 | 1 | 13/16 | 20 | 13 | T-341 |
| 3 | 1 3/4 | 1/2 | 13 | 13 | W-106 |
| 3 1/8 | 3/4 | 3/4 | 20 | 13 | 6B5852 |
| 3 1/4 | 7/8 | 3/4 | 20 | 13 | 2A1230 |
| 3 5/8 | 2 1/2 | 9/16 | 13 | 13 | 230-A |
| 3 1/2 | 1 | 3/4 | 20 | 13 | 1A2330 |
| 3 5/8 | 1 3/16 | 3/4 | 20 | 13 | 2B581 |
| 3 15/16 | 1 | 3/4 | 20 | 13 | V-73 |
| 4 | 1 | 3/4 | 20 | 13 | V-566 |
| 4 1/16 | 1 | 3/4 | 20 | 13 | 1A4669 |
| 4 1/16 | 1 | 3/4 | 20 | 13 | 2A2090 |
| 4 1/4 | 1 | 11/16 | 20 | 13 | T-877 |
| 4 1/4 | 1 | 3/4 | 13 | 13 | 1A8697 |
| 4 1/2 | 1 | 3/4 | 20 | 13 | 1A2360 |
| 4 1/2 | 1 5/16 | 3/4 | 20 | 13 | 1A6864 |
| 4 11/16 | 1 1/8 | 7/8 | 20 | 13 | 2A2371† |
| 4 3/4 | 1 | 3/4 | 13 | 13 | L-589 |
| 4 7/8 | 1 3/4 | 3/4 | 20 | 13 | 1A3353 |
| 5 | 1 1/4 | 5/8 | 13 | 13 | 218-A |
| 5 1/8 | 7/8 | 3/4 | 13 | 13 | 2A3585 |
| 5 1/4 | 7/8 | 3/4 | 20 | 13 | 2B3583 |

**Heat Treated. †Drilled End.

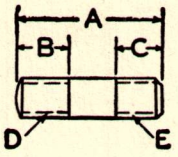


# CATERPILLAR STANDARDS

## STUDS, N.C. AND N.F.



### 1/2

| A | B | C | D | E | Part No. |
|---|---|---|---|---|---|
| 5 3/4 | 1 | 5/8 | 13 | 13 | 846-A |
| 5 13/16 | 1 5/8 | 3/4 | 20 | 13 | L-722 |
| 6 | 15/16 | 13/16 | 20 | 20 | 119943 |
| 6 1/16 | 1 5/8 | 3/4 | 20 | 13 | 2B1081 |
| 6 1/8 | 1 15/16 | 3/4 | 20 | 13 | 5B2372 |
| 6 1/4 | 1 13/16 | 3/4 | 20 | 13 | L-197 |
| 6 1/4 | 2 1/8 | 3/4 | 20 | 13 | 4B4995 |
| 6 7/16 | 1 | 3/4 | 20 | 13 | 2B8829 |
| 6 11/16 | 2 1/8 | 3/4 | 20 | 13 | 1A5846 |
| 6 11/16 | 2 9/16 | 3/4 | 20 | 13 | 5B2373 |
| 6 3/4 | 2 5/16 | 13/16 | 20 | 20 | 119942 |
| 7 | 4 3/4 | 1 | 13 | 13 | T-798 |
| 8 3/16 | 15/16 | 1 3/4 | 20 | 20 | 4B820 |
| 8 3/4 | 1 1/4 | 3/4 | 13 | 13 | S-721 |
| 9 1/4 | 3/4 | 3/4 | 13 | 13 | 7B9343 |
| 9 1/2 | 1 1/2 | 1 1/2 | 13 | 13 | 1094-A |
| 10 1/4 | 3/4 | 9/16 | 13 | 13 | 5B8513 |

### 9/16

| A | B | C | D | E | Part No. |
|---|---|---|---|---|---|
| 6 9/16 | 1 1/4 | 7/8 | 18 | 12 | 4B4100 |
| 6 15/16 | 1 1/4 | 7/8 | 18 | 12 | 9B916 |

### 5/8

| A | B | C | D | E | Part No. |
|---|---|---|---|---|---|
| 1 7/8 | 1 | 1/2 | 18 | 11 | 7B8887 |
| 1 15/16 | 7/8 | 11/16 | 18 | 11 | 6B9831 |
| 2 | 1 | 3/4 | 11 | 11 | S-1749 |
| 2 | 7/8 | 7/8 | 18 | 18 | S-1295 |
| 2 | 1 | 7/8 | 11 | 11 | 423-C |
| 2 1/8 | 7/8 | 15/16 | 18 | 11 | 8B8326 |
| 2 1/8 | 1 | 15/16 | 18 | 11 | L-2097 |
| 2 3/16 | 7/8 | 5/8 | 18 | 11 | 7B9504 |
| 2 3/16 | 1 1/8 | 5/8 | 11 | 11 | S-468 |
| 2 1/4 | 7/8 | 15/16 | 18 | 11 | 8B8143 |
| 2 1/4 | 7/8 | 1 | 18 | 11 | 6B6168 |
| 2 1/4 | 1 | 15/16 | 18 | 18 | 7B9903 |
| 2 1/4 | 1 1/8 | 7/8 | 11 | 11 | S-1422 |
| 2 3/8 | 7/8 | 5/8 | 18 | 11 | 6B8639 |
| 2 3/8 | 7/8 | 1 1/8 | 18 | 11 | 1B8509 |
| 2 3/8 | 15/16 | 3/4 | 18 | 11 | B-236-B |
| 2 3/8 | 15/16 | 15/16 | 18 | 11 | B-605 |
| 2 3/8 | 1 1/4 | 3/4 | 18 | 11 | 50132 |
| 2 7/16 | 1 | 7/16 | 11 | 11 | 2B7902 |
| 2 7/16 | 1 | 15/16 | 18 | 18 | 2B6889 |

# CATERPILLAR STANDARDS

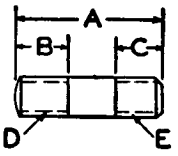


## STUDS, N.C. AND N.F.



5/8

| A | B | C | D | E | Part No. |
|---|---|---|---|---|---|
| 2 1/2 | 3/4 | 1 3/16 | 18 | 11 | S-1485 |
| 2 1/2 | 1 | 13/16 | 18 | 11 | 3081-A |
| 2 1/2 | 1 | 7/8 | 18 | 18 | T-305 |
| 2 1/2 | 1 1/4 | 3/4 | 18 | 18 | 480-D |
| 2 1/2 | 1 1/4 | 1 | 18 | 18 | B-260 |
| 2 9/16 | 1 | 1 | 18 | 11 | 1C1455† |
| 2 5/8 | 13/16 | 15/16 | 18 | 11 | 4B3095 |
| 2 11/16 | 7/8 | 15/16 | 18 | 18 | 1B7403 |
| 2 3/4 | 15/16 | 15/16 | 18 | 11 | 5B3022 |
| 2 7/8 | 7/8 | 5/8 | 18 | 11 | 6B8638 |
| 2 7/8 | 1 1/4 | 15/16 | 18 | 18 | 4B4601 |
| 2 15/16 | 1 3/8 | 15/16 | 18 | 11 | S-2564 |
| 3 | 1 1/4 | 3/4 | 18 | 11 | 50113 |
| 3 1/16 | 1 | 15/16 | 18 | 11 | B-498 |
| 3 1/8 | 1 1/4 | 1 1/2 | 18 | 11 | 50181 |
| 3 1/2 | 1 1/8 | 15/16 | 18 | 18 | 2B9100 |
| 3 1/2 | 1 3/8 | 5/8 | 11 | 11 | 745-A |
| 3 3/4 | 1 | 13/16 | 18 | 11 | L-1343 |
| 4 1/16 | 7/8 | 1 5/16 | 18 | 11 | R-268 |
| 4 1/2 | 1 3/16 | 1 3/16 | 11 | 11 | S-771 |
| 4 5/8 | 3 | 3/4 | 11 | 11 | 440-C |
| 4 3/4 | 1 | 1/2 | 18 | 11 | B-95 |
| 4 13/16 | 7/8 | 15/16 | 18 | 18 | 8B5367 |
| 4 7/8 | 1 | 1 | 11 | 11 | W-671 |
| 5 1/8 | 1 | 9/16 | 11 | 11 | 2576-A |
| 5 3/8 | 1 | 15/16 | 11 | 11 | 2A1005 |
| 5 3/8 | 1 | 15/16 | 18 | 11 | 3B9598 |
| 5 5/8 | 1 | 1 | 11 | 11 | 1A2142 |
| 5 3/4 | 1 3/8 | 15/16 | 11 | 11 | 2B1992 |
| 5 7/8 | 1 1/4 | 7/8 | 18 | 18 | 1A2037†** |
| 6 | 1 | 15/16 | 11 | 11 | 6B7574 |
| 6 | 1 | 1 | 18 | 11 | 2B6583 |
| 6 | 3 | 3/4 | 11 | 11 | 441-C |
| 6 1/16 | 1 | 15/16 | 11 | 11 | 2A4191 |
| 6 5/8 | 1 3/4 | 7/8 | 11 | 11 | 337-D |
| 6 7/8 | 1 | 13/16 | 18 | 11 | L-2071 |
| 6 7/8 | 1 | 15/16 | 11 | 11 | 5B2661 |
| 7 1/4 | 7/8 | 15/16 | 18 | 11 | 2A441 |
| 7 1/4 | 1 1/4 | 15/16 | 18 | 11 | 2A3365 |
| 7 3/8 | 1 1/4 | 5/8 | 11 | 11 | 215-A |
| 7 5/8 | 1 | 7/8 | 11 | 18 | B-604 |
| 8 | 1 1/8 | 13/16 | 18 | 11 | 1B2571 |
| 8 | 5 1/4 | 1 1/2 | 11 | 11 | L-1772 |
| 8 1/8 | 2 11/16 | 15/16 | 18 | 11 | 7B1820 |
| 8 1/16 | 1 1/8 | 1 | 18 | 11 | 2B9468 |
| 8 3/8 | 1 | 1 | 18 | 11 | 2A4265 |
| 8 15/32 | 1 | 3/4 | 18 | 11 | 1A4130 |
| 9 | 1 | 15/16 | 11 | 11 | 4B9787 |
| 9 1/4 | 1 | 15/16 | 11 | 11 | 5B1569 |

**Heat Treated. †Drilled End.

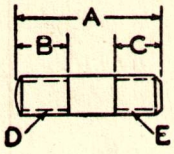


# CATERPILLAR STANDARDS

## STUDS, N.C. AND N.F.



### 5/8

| A | B | C | D | E | Part No. |
|---|---|---|---|---|---|
| 9 1/4 | 1 1/4 | 3/4 | 11 | 11 | 214-A |
| 9 3/4 | 1 5/8 | 3/4 | 11 | 11 | 553-A |
| 9 13/16 | 1 1/4 | 15/16 | 18 | 11 | 2A310 |
| 11 1/2 | 1 1/2 | 3/4 | 11 | 11 | 1524-A |
| 11 3/4 | 1 1/8 | 1 1/8 | 11 | 11 | 4B1512 |
| 12 1/4 | 4 | 1 3/4 | 18 | 18 | 1643-A |
| 12 1/2 | 1 | 1 1/8 | 18 | 18 | 19653 |
| 12 3/4 | 1 1/4 | 7/8 | 11 | 11 | 213-A |
| 13 11/16 | 1 1/8 | 1 1/8 | 18 | 11 | L-732 |
| 14 1/16 | 1 1/2 | 1 1/2 | 11 | 11 | 1595-A |

### 3/4

| A | B | C | D | E | Part No. |
|---|---|---|---|---|---|
| 2 | 1 | 3/4 | 16 | 16 | L-1866 |
| 2 1/2 | 1 1/8 | 11/16 | 16 | 10 | 7B204 |
| 2 5/16 | 15/16 | 1 1/8 | 16 | 10 | 4B3251 |
| 2 3/4 | 1 | 1 | 16 | 10 | L-1867 |
| 2 3/4 | 1 | 1 3/16 | 16 | 10 | 6B6161 |
| 2 3/4 | 1 1/8 | 1 1/8 | 10 | 10 | 2610-A |
| 2 3/4 | 1 1/8 | 1 3/16 | 16 | 10 | 6B5424 |
| 2 3/4 | 1 1/2 | 7/8 | 16 | 10 | 50110 |
| 2 15/16 | 1 1/8 | 1 1/8 | 16 | 16 | 8B8248 |
| 2 7/8 | 1 1/4 | 7/8 | 10 | 10 | 454-C |
| 2 7/8 | 1 3/8 | 1 1/8 | 16 | 10 | V-155 |
| 3 | 1 1/8 | 1 1/4 | 16 | 10 | 1B7115 |
| 3 | 1 1/4 | 7/8 | 10 | 10 | 217-A |
| 3 1/4 | 1 1/4 | 1 1/4 | 16 | 10 | L-1180 |
| 3 3/8 | 1 1/8 | 3/4 | 10 | 10 | S-525 |
| 3 3/8 | 1 1/8 | 1 1/8 | 16 | 16 | 3B1656 |
| 3 7/16 | 1 1/2 | 1 1/8 | 16 | 10 | 4B8461 |
| 3 1/2 | 1 | 1 1/4 | 16 | 10 | 1A4953 |
| 3 1/4 | 1 1/4 | 1 1/8 | 16 | 10 | 1A1890 |
| 3 7/8 | 1 3/8 | 7/8 | 10 | 10 | 446-C |
| 4 5/8 | 3 | 1 1/8 | 16 | 10 | 7B1566 |
| 5 | 1 1/4 | 1 1/4 | 10 | 10 | 1657-A |
| 5 1/8 | 1 1/2 | 1 1/4 | 16 | 10 | 1A3437† |
| 5 3/4 | 1 3/8 | 1 3/4 | 16 | 10 | 2A3583† |
| 6 | 1 5/8 | 1 3/8 | 16 | 10 | 1A3259† |
| 6 | 4 3/8 | 1 1/8 | 16 | 10 | 2B7102 |
| 6 1/16 | 1 | 1 1/4 | 16 | 10 | 1B8490 |
| 7 1/8 | 1 1/2 | 7/8 | 10 | 10 | 447-C |
| 7 1/16 | 1 3/8 | 1 3/4 | 16 | 10 | 2A3586† |
| 7 3/4 | 1 1/2 | 7/8 | 10 | 10 | 448-C |
| 8 1/2 | 1 3/4 | 1 3/4 | 16 | 16 | 505-A |
| 12 13/16 | 1 1/8 | 1 1/8 | 16 | 10 | 1A7705 |
| 15 7/8 | 1 1/8 | 1 1/2 | 16 | 10 | 1A1630 |
| 16 1/8 | 1 1/4 | 1 1/8 | 10 | 10 | S-376 |
| 17 1/16 | 1 1/8 | 1 1/2 | 16 | 10 | 1A5362 |
| 22 | 6 | 1 1/8 | 10 | 10 | 2133-A |

†Drilled End.

Printed in U. S. A.

# CATERPILLAR STANDARDS

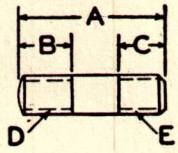


## STUDS, N.C. AND N.F.



### 3/8

| A | B | C | D | E | Part No. |
|---|---|---|---|---|---|
| 2 5/8 | 1 1/2 | 3/4 | 14 | 9 | 50105 |
| 3 1/8 | 2 | 7/8 | 9 | 9 | 255-A |
| 3 1/4 | 1 1/4 | 1 1/4 | 14 | 14 | 1A7765 |
| 3 1/4 | 1 1/4 | 1 1/4 | 14 | 9 | T-427 |
| 3 1/2 | 1 1/4 | 1 1/2 | 14 | 9 | 1A7761 |
| 3 1/2 | 1 1/2 | 1 | 9 | 9 | 643-C |
| 3 5/8 | 1 5/8 | 1 5/8 | 9 | 9 | 1656-A |
| 3 3/4 | 2 | 7/8 | 9 | 9 | 661-A |
| 4 1/4 | 1 1/2 | 1 | 9 | 9 | S-471 |
| 4 1/2 | 1 1/4 | 1 3/4 | 14 | 9 | 1B5557 |
| 4 3/4 | 1 5/8 | 1 5/16 | 14 | 9 | 1B6383 |
| 5 7/8 | 1 3/4 | 5/8 | 14 | 14 | 8B1763 |
| 14 7/8 | 1 1/2 | 1 1/2 | 9 | 9 | 3B4173 |

### 1

| A | B | C | D | E | Part No. |
|---|---|---|---|---|---|
| 3 1/2 | 1 1/2 | 1 | 8 | 8 | 439-C |
| 3 3/4 | 1 1/4 | 1 1/4 | 14 | 8 | 7B9672 |
| 3 3/4 | 1 5/8 | 1 1/2 | 14 | 8 | V-268 |
| 3 3/4 | 1 5/8 | 1 3/4 | 14 | 8 | 3324-A |
| 4 5/8 | 1 1/2 | 2 | 14 | 8 | 1A1696 |
| 7 1/8 | 1 5/8 | 1 1/2 | 14 | 8 | 2B4145 |
| 8 5/8 | 1 1/4 | 2 1/2 | 14 | 8 | 2A4186 |
| 8 5/8 | 1 1/2 | 2 1/4 | 12 | 12 | 8B9369 |
| 9 1/4 | 6 5/8 | 1 1/8 | 8 | 8 | S-2311 |
| 10 3/4 | 1 5/8 | 3/4 | 14 | 14 | 7B2559 |
| 11 1/4 | 2 | 1 | 14 | 14 | 7B7068 |
| 19 | 10 1/2 | 1 | 8 | 8 | S-2319 |

### 1 1/4

| A | B | C | D | E | Part No. |
|---|---|---|---|---|---|
| 3 1/16 | 1 1/8 | 1 5/8 | 12 | 7 | 7B1810 |
| 4 7/8 | 1 1/8 | 1 5/8 | 12 | 7 | 7B5896 |
| 5 | 1 1/8 | 2 1/8 | 12 | 7 | 2A1198 |
| 8 1/2 | 2 | 2 | 12 | 12 | 1B6374 |

### 1 1/2

| A | B | C | D | E | Part No. |
|---|---|---|---|---|---|
| 8 5/8 | 2 1/4 | 1 1/2 | 12 | 12 | 8B9369 |
| 8 5/8 | 2 1/4 | 2 1/4 | 12 | 12 | 2B4401 |

# CATERPILLAR STANDARDS

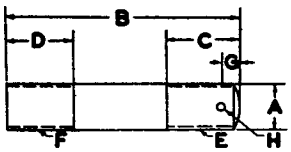


## STUDS N.C. AND N.F. (DRILLED)

Page No. 42 Issue No. 2 Date 3-1-43

| A | B | C | D | E | F | G | H | Part No. |
|---|---|---|---|---|---|---|---|---|
| 5/16 | 6 1/16 | 3/4 | 5/16 | 24 | 24 | 3/4 | 7/64 | 3B2159 |
| 3/8 | 1 7/8 | 1 | 3/8 | 24 | 16 | 1/8 | 7/64 | B-125 |
| 3/8 | 2 5/32 | 5/8 | 7/16 | 24 | 16 | 1/4 | 1/8 | 5B3432 |
| 3/8 | 2 1/2 | 5/8 | 5/16 | 24 | 16 | 1/8 | 1/8 | 1A7238 |
| 3/8 | 6 3/8 | 3/4 | 3/4 | 24 | 24 | 5/32 | 1/8 | 1B9923 |
| 1/2 | 1 15/16 | 1 | 5/8 | 13 | 13 | 5/16 | 1/8 | 1218-A |
| 1/2 | 4 1/2 | 1 1/4 | 5/8 | 20 | 20 | 1/4 | 7/64 | B-455 |
| 1/2 | 12 1/2 | 3 1/4 | 1/2 | 20 | 20 | 2 1/16 | 1/8 | 1B7702 |
| 5/16 | 4 5/16 | 1 1/8 | 15/16 | 18 | 12 | 3/16 | 9/64 | T-202 |
| 5/8 | 2 | 1 | 9/16 | 18 | 11 | 1/4 | 5/64 | 6995 |
| 5/8 | 2 1/2 | 1 1/16 | 15/16 | 18 | 18 | 5/16 | 5/32 | L-2120 |
| 5/8 | 3 1/4 | 2 | 3/4 | 11 | 11 | 5/16 | 9/64 | 259-D |
| 5/8 | 4 1/8 | 1 1/8 | 1 5/16 | 18 | 11 | 5/16 | 9/64 | 21820 |
| 5/8 | 4 1/8 | 1 | 2 15/16 | 18 | 11 | 1/4 | 9/64 | 52548 |
| 5/8 | 4 5/16 | 1 1/4 | 1 1/16 | 18 | 11 | 1/4 | 9/64 | L-734 |
| 5/8 | 4 1/2 | 1 1/4 | 7/8 | 18 | 11 | 1/2 | 9/64 | S-295 |
| 5/8 | 4 13/16 | 1 1/4 | 1 1/16 | 18 | 11 | 5/16 | 9/64 | L-2208 |
| 5/8 | 5 | 1 | 7/8 | 18 | 11 | 1/4 | .140 | 60150 |
| 5/8 | 5 3/8 | 1 3/8 | 1 1/8 | 18 | 11 | 7/16 | 9/64 | 2554-A |
| 5/8 | 5 3/4 | 1 1/4 | 7/8 | 18 | 18 | 5/16 | 5/32 | 1B8470 |
| 5/8 | 8 1/8 | 1 7/8 | 1 1/16 | 11 | 11 | 5/16 | 5/32 | 151-A |
| 5/8 | 5 7/8 | 1 1/4 | 1 | 18 | 11 | 1/4 | 5/32 | 2A745 |
| 11/16 | 5 7/8 | 1 1/2 | 1 1/2 | 11 | 16 | 11/32 | 9/64 | 4B4000 |
| 11/16 | 6 1/8 | 1 1/2 | 1 1/2 | 11 | 16 | 11/32 | 9/64 | 4B3949 |
| 3/4 | 2 1/2 | 1 1/8 | 7/8 | 16 | 10 | 1/4 | 1/8 | 8919 |
| 3/4 | 3 3/4 | 2 | 3/4 | 10 | 10 | 3/16 | 9/64 | 663-D |
| 3/4 | 3 11/16 | 1 3/8 | 1 1/16 | 16 | 16 | 5/16 | 9/64 | S-909 |
| 3/4 | 5 5/16 | 2 | 1 1/8 | 16 | 10 | 7/32 | 5/32 | 1B4730 |
| 7/8 | 3 1/8 | 1 5/16 | 1 | 14 | 9 | 3/8 | 9/64 | B-128 |
| 7/8 | 3 3/8 | 1 1/2 | 1 | 14 | 14 | 5/16 | 5/32 | 725-A |
| 7/8 | 3 5/8 | 1 1/2 | 1 | 14 | 14 | 5/16 | 5/32 | 1A529 |
| 7/8 | 5 3/8 | 2 | 1 1/8 | 9 | 9 | 3/8 | 5/32 | 1720-A |
| 7/8 | 3 5/8 | 1 1/2 | 1 | 14 | 14 | 5/16 | 5/32 | 1A529 |
| 7/8 | 4 7/8 | 1 1/4 | 1 1/8 | 14 | 14 | 5/16 | 5/32 | 1B769 |
| 1 | 11 7/8 | 2 | 2 1/2 | 14 | 8 | 7/16 | 5/32 | 2A4189 |
| 1 3/8 | 15 1/4 | 2 | 2 | 12 | 12 | 11/64 | 11/64 | 5B6020 |

# CATERPILLAR STANDARDS

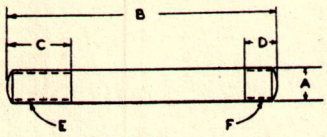


STUDS, N.C. AND N.F. (SPEC. DIA.)

Page No. 43 Issue No. 1 Date 7-15-33

| A | B | C | D | E | F | Part No. |
|---|---|---|---|---|---|---|
| .3705 / .3700 | 3 1/8 | 3/4 | 3/8 | 24 | 24 | 1B4571 |
| .3705 / .3700 | 3 13/16 | 3/4 | 3/8 | 24 | 24 | 1C128 |
| .3705 / .3700 | 4 3/16 | 3/4 | 3/8 | 24 | 24 | 1C131 |
| .3705 / .3700 | 4 3/4 | 3/4 | 3/8 | 24 | 24 | L-1353 |
| .3705 / .3700 | 5 7/16 | 3/4 | 3/8 | 24 | 24 | T-66 |
| .3705 / .3700 | 5 5/8 | 3/4 | 3/8 | 24 | 24 | L-1354 |
| .3705 / .3700 | 5 7/8 | 3/4 | 3/8 | 24 | 24 | T-67 |
| .4960 / .4955 | 5 5/8 | 1 | 3/4 | 20 | 13 | 3367-A |
| .8715 / .8705 | 3 5/8 | 1 1/4 | 1 1/4 | 14 | 9 | 1A4198 |
| .9965 / .9955 | 4 1/8 | 1 3/8 | 1 1/2 | 14 | 8 | 1A4199 |

## BUSHINGS—REDUCING

| Size | Part No. |
|---|---|
| ¼ to ⅛ | 3B6768 |
| ½ to ¼ | 3B7764 |

## COUPLINGS—REDUCING

| Size | Part No. |
|---|---|
| ¼ to ⅛ | 3B7763 |
| ½ to ¼ | 3B6775 |

## ELBOWS 45°

| Size | Part No. |
|---|---|
| ⅛ | 3B7897 |
| ¼ | 3B6770 |

## ELBOWS 90°

| Size | Part No. |
|---|---|
| ⅛ | 3B6769 |
| 1½ | 7B3395 |

## ELBOW—STREET 45°

| Size | Part No. |
|---|---|
| ⅛ | 3B7896 |
| ¼ | 3B6772 |
| ½ | 5B1585 |

## ELBOWS—STREET 90°

| Size | Part No. |
|---|---|
| ⅛ | 3B8822 |
| ¼ | 3B6773 |
| ½ | 3B6774 |

## ELBOWS—REDUCING

| Size | Part No. |
|---|---|
| ⅜ to ½ | 3B7898 |
| ½ to ¼ | 3B7765 |

## TEES

| Size | Part No. |
|---|---|
| ⅛ | 3B7900 |
| ¼ | 3B7762 |

## UNION

| Size | Part No. |
|---|---|
| ¼ | 3B7899 |

## NIPPLES

| Size | Part No. |
|---|---|
| ¼x ⅞(c) | 3B7767 |
| ¼x1 | 3B7768 |
| ¼x1⅛ | 3B7769 |
| ¼x1¼ | 3B7771 |
| ¼x1½(s) | 3B7894 |
| ¼x1¾ | 3B9006 |
| ¼x2 | 3B7773 |
| ¼x2¼ | 3B7775 |
| ¼x2⅜ | 3B7893 |
| ¼x2½ | 3B7776 |
| ¼x3 | 3B7778 |
| ¼x5 | 3B7781 |
| ¼x5½ | 3B7782 |
| ⅜x1¾ | 4B[illegible]388 |
| ½x1⅛(c) | 3B7770 |
| ½x1½(s) | 3B7881 |
| ½x2 | 3B7774 |
| ½x2½ | 3B7777 |
| ½x3 | 3B7882 |
| ¾x9¾ | 3B7895 |

(c) Close (s) Short

# CATERPILLAR STANDARDS

## NUTS—MACHINE SCREW



| Dia. | Size Thread | Part Number |
|---|---|---|
| 6 | 32 | 4B2040* |
| 6 | 32 | 4B2041 |
| 8 | 32 | 4B2042* |
| 8 | 32 | 4B2043 |
| 8 | 36 | 4B2044* |
| 8 | 36 | 4B2045 |
| 10 | 24 | 4B2046* |
| 10 | 24 | 4B2047 |
| 10 | 32 | 4B2048* |
| 10 | 32 | 4B2049 |
| 12 | 24 | 4B2050* |
| 12 | 24 | 4B2051 |

*Brass

# CATERPILLAR STANDARDS

## MACHINE SCREWS—FLAT & FILLISTER HEAD



| FILLISTER HEAD | | | | FLAT HEAD | | | |
|---|---|---|---|---|---|---|---|
| Dia. | Size Thread | Length | Part Number | Dia. | Size Thread | Length | Part Number |
| 8 | 32 | 1/16 | 4B1296 | 5 | 40 | 3/8 | 8B9253 |
| 8 | 32 | 1/2 | 4B1297 | 6 | 32 | 3/4 | 4B1267 |
| 8 | 32 | 5/8 | 4B1298 | 8 | 32 | 1/2 | 4B1268 |
| 8 | 32 | 7/8 | 4B1299 | 8 | 32 | 1/2 | 4B1292* |
| 8 | 32 | 2 | 4B1300 | 8 | 32 | 5/8 | 4B1269 |
| 8 | 32 | 2 1/4 | 4B1301 | 8 | 32 | 3/4 | 4B1270 |
| 8 | 36 | 1/4 | 4B1302* | 8 | 32 | 7/8 | 4B1271 |
| 8 | 36 | 5/16 | 4B1303 | 8 | 32 | 1 | 4B1272 |
| 8 | 36 | 1/2 | 4B1304 | 10 | 24 | 1/2 | 4B1273 |
| 10 | 24 | 1/4 | 4B1305 | 10 | 24 | 3/8 | 4B1293 |
| 10 | 24 | 3/8 | 4B1306 | 10 | 24 | 5/8 | 4B1274 |
| 10 | 24 | 1/2 | 4B1307 | 10 | 24 | 1 7/8 | 5B2925 |
| 10 | 24 | 5/8 | 4B1308 | 10 | 32 | 1 1/4 | 4B1275 |
| 10 | 24 | 1 7/8 | 4B1309 | 10 | 32 | 7/8 | 5B1482 |
| 10 | 32 | 3/8 | 4B1310* | 12 | 24 | 1/2 | 4B1276 |
| 10 | 32 | 3/8 | 4B1311 | 12 | 24 | 1/2 | 5B2926 |
| 10 | 32 | 1/2 | 4B1312 | 12 | 24 | 5/8 | 4B1277 |
| 10 | 32 | 3/4 | 4B1313 | 12 | 24 | 3/4 | 4B1278 |
| 10 | 32 | 1 | 4B1314 | 12 | 24 | 1 1/4 | 4B1279 |
| 10 | 32 | 1 3/8 | 4B1315 | 1/4 | 20 | 1/2 | 4B1280 |
| 12 | 24 | 5/8 | 4B1316 | 1/4 | 20 | 5/8 | 4B1281 |
| 12 | 24 | 3/4 | 4B1317* | 1/4 | 20 | 3/4 | 4B1282 |
| 1/4 | 20 | 3/8 | 4B1318 | 1/4 | 20 | 7/8 | 4B1283 |
| 1/4 | 20 | 1/2 | 4B1319 | 1/4 | 20 | 1 | 4B1284 |
| 1/4 | 20 | 5/8 | 4B1320 | 1/4 | 20 | 1 1/8 | 4B1295 |
| 1/4 | 28 | 5/8 | 4B1326 | 1/4 | 20 | 1 1/4 | 4B1285 |
| 1/4 | 20 | 3/4 | 4B1321 | 5/16 | 18 | 1/2 | 4B1286 |
| 1/4 | 20 | 7/8 | 4B1322 | 5/16 | 18 | 5/8 | 4B5158 |
| 1/4 | 20 | 1 | 4B1323 | 5/16 | 18 | 3/4 | 4B1287 |
| 1/4 | 28 | 1 1/8 | 4B1327 | 5/16 | 18 | 2 1/4 | 4B1288 |
| 1/4 | 20 | 1 3/4 | 4B1324 | 5/16 | 18 | 2 1/2 | 4B1289 |
| 1/4 | 20 | 2 1/4 | 4B1325 | 3/8 | 16 | 7/8 | 4B1290 |
| 1/4 | 20 | 2 1/4 | 8B1720 | 3/8 | 16 | 1 | 4B1291 |
| 5/16 | 18 | 5/8 | 4B1328 | 3/8 | 24 | 3/4 | 7B6636 |
| 5/16 | 18 | 3/4 | 4B1329 | 3/8 | 24 | 1 1/4 | 4B7335 |
| 5/16 | 18 | 1 1/4 | 5B3106 | | | | |
| 3/8 | 16 | 3/4 | 4B1330 | | | | |

*Brass

Printed in U. S. A.

# CATERPILLAR STANDARDS

## WASHERS—PLAIN (CUT)



| S. A. E. STD. | | | | | U. S. or MFG. STD. | | | | |
|---|---|---|---|---|---|---|---|---|---|
| Bolt Size | Inside Dia. | Outside Dia. | Thickness | Part Number | Bolt Size | Inside Dia. | Outside Dia. | Thickness | Part Number |
| #2 | 5/32 | 1/4 | 1/32 | 4B5322 | 5/32 | 1/4 | 5/16 | 3/64 | 4B5355 |
| #4 | 3/16 | 5/16 | 1/32 | 4B5323 | 1/4 | 5/16 | 3/4 | 1/16 | 4B5269 |
| #6 | 1/8 | 3/8 | 3/64 | 4B5324 | 5/16 | 3/8 | 7/8 | 1/16 | 4B5270 |
| #8 | 5/16 | 7/16 | 3/64 | 4B4863 | 3/8 | 7/16 | 1 | 3/64 | 4B5271 |
| #8 | 5/16 | 7/16 | 3/64 | 4B4273* | 7/16 | 1/2 | 1 1/4 | 3/64 | 4B5272 |
| #10 | 7/32 | 1/2 | 1/16 | 4B4274 | 1/2 | 9/16 | 1 3/8 | 1/64 | 4B5273 |
| #10 | 7/32 | 1/2 | 1/16 | 4B4275* | 9/16 | 5/8 | 1 1/2 | 1/64 | 4B5274 |
| #12 | 1/4 | 9/16 | 1/16 | 4B4674 | 5/8 | 11/16 | 1 3/4 | 3/64 | 4B5275 |
| 1/4 | 9/32 | 5/8 | 1/16 | 4B4276 | 3/4 | 13/16 | 2 | 3/64 | 4B5276 |
| 5/16 | 11/32 | 11/16 | 1/16 | 4B4277 | 7/8 | 15/16 | 2 1/4 | 5/32 | 4B5277 |
| 3/8 | 13/32 | 13/16 | 1/16 | 4B4278 | 1 | 1 1/16 | 2 1/2 | 5/32 | 4B5278 |
| 7/16 | 15/32 | 15/16 | 1/16 | 4B4279 | 1 1/8 | 1 1/4 | 2 3/4 | 5/32 | 4B5279 |
| 1/2 | 17/32 | 1 1/16 | 3/32 | 4B4280 | 1 1/4 | 1 3/8 | 3 | 11/64 | 4B5280 |
| 9/16 | 19/32 | 1 1/8 | 3/32 | 4B5059 | 1 3/8 | 1 1/2 | 3 1/4 | 11/64 | 4B5281 |
| 5/8 | 21/32 | 1 5/16 | 3/32 | 4B4281 | 1 1/2 | 1 5/8 | 3 1/2 | 11/64 | 4B5282 |
| 11/16 | 23/32 | 1 3/16 | 3/32 | 4B4282 | 1 5/8 | 1 3/4 | 3 3/4 | 11/64 | 4B5283 |
| 3/4 | 13/16 | 1 1/2 | 1/8 | 4B4283 | 1 3/4 | 1 7/8 | 4 | 11/64 | 4B5284 |
| 7/8 | 15/16 | 1 3/4 | 1/8 | 4B4284 | 1 7/8 | 2 | 4 1/4 | 11/64 | 4B5285 |
| 1 | 1 1/16 | 2 | 1/8 | 4B4285 | 2 | 2 1/8 | 4 1/2 | 11/64 | 4B5286 |
| 1 1/8 | 1 3/16 | 2 1/4 | 1/8 | 4B5325 | | | | | |
| 1 1/4 | 1 5/16 | 2 1/2 | 5/32 | 4B5326 | | | | | |
| 1 3/8 | 1 7/16 | 2 3/4 | 5/32 | 4B4286 | | | | | |
| 1 1/2 | 1 9/16 | 3 | 5/32 | 4B5327 | | | | | |

*Brass

Printed in U. S. A.

# CATERPILLAR STANDARDS

## RIVETS—ROUND HEAD IRON

Page No. 51 Issue No. 2 Date 9-15-42

| Dia. | Length | Part Number |
|---|---|---|
| 1/8 | 1/4 | 4B4304 |
| 1/8 | 5/16 | 4B4305 |
| 1/8 | 3/8 | 4B4306 |
| 1/8 | 1/2 | 4B4307 |
| 1/8 | 5/8 | 4B4308 |
| 5/32 | 1/2 | 4B4309 |
| 3/16 | 3/8 | 4B4310 |
| 3/16 | 1/2 | 4B4311 |
| 3/16 | 5/8 | 4B4312 |
| 3/16 | 11/16 | 4B4313 |
| 3/16 | 3/4 | 4B4314 |
| 3/16 | 1 | 4B4315 |
| 3/16 | 1 3/4 | 4B4316 |
| 3/16 | 2 1/2 | 4B4317 |
| 1/4 | 1/4 | 4B4318 |
| 1/4 | 3/8 | 4B4319 |
| 1/4 | 7/16 | 5B1575 |
| 1/4 | 1/2 | 4B4320 |
| 1/4 | 5/8 | 4B4321 |
| 1/4 | 3/4 | 4B4322 |
| 1/4 | 7/8 | 4B4323 |
| 1/4 | 1 | 4B4424 |
| 1/4 | 1 1/8 | 4B4325 |
| 1/4 | 1 1/4 | 4B4326 |
| 1/4 | 1 1/2 | 4B4327 |
| 1/4 | 1 3/4 | 4B4328 |
| 1/4 | 2 1/8 | 4B4329 |
| 1/4 | 2 1/4 | 4B4330 |
| 1/4 | 2 3/4 | 4B4331 |
| 1/4 | 3 1/4 | 4B4332 |
| 5/16 | 1/2 | 4B4333 |
| 5/16 | 5/8 | 4B4334 |
| 5/16 | 3/4 | 4B4335 |
| 5/16 | 7/8 | 4B4336 |
| 5/16 | 11/16 | 6B1436 |
| 5/16 | 1 | 4B4337 |
| 5/16 | 1 1/4 | 4B4338 |
| 5/16 | 1 1/2 | 4B4339 |
| 5/16 | 1 7/8 | 4B4340 |
| 5/16 | 2 | 4B4341 |
| 5/16 | 2 1/2 | 4B4342 |
| 3/8 | 3/4 | 4B4343 |
| 3/8 | 7/8 | 4B4344 |
| 3/8 | 1 | 4B4345 |
| 3/8 | 1 1/8 | 4B4346 |
| 3/8 | 1 1/4 | 4B4347 |
| 3/8 | 1 1/2 | 4B4348 |
| 3/8 | 1 5/8 | 4B4349 |
| 3/8 | 1 3/4 | 4B4350 |
| 3/8 | 1 7/8 | 4B6689 |
| 3/8 | 2 | 4B4351 |
| 3/8 | 2 1/4 | 4B4352 |
| 3/8 | 2 3/8 | 4B6690 |
| 3/8 | 3 | 4B4353 |
| 3/8 | 3 3/4 | 4B4354 |
| 1/2 | 1 | 4B4355 |
| 1/2 | 1 1/4 | 4B4356 |
| 1/2 | 1 3/8 | 4B4357 |
| 1/2 | 1 1/2 | 4B4358 |
| 1/2 | 1 5/8 | 4B4359 |
| 1/2 | 1 3/4 | 4B4360 |
| 1/2 | 1 7/8 | 4B4361 |
| 1/2 | 2 | 4B4362 |
| 1/2 | 2 1/8 | 4B4363 |
| 1/2 | 2 1/4 | 4B4364 |
| 1/2 | 2 1/2 | 4B4365 |
| 1/2 | 3 3/4 | 4B6688 |
| 1/2 | 4 | 4B4366 |
| 5/8 | 1 1/4 | 4B4367 |
| 5/8 | 1 3/8 | 4B4368 |
| 5/8 | 1 1/2 | 4B4369 |
| 5/8 | 1 5/8 | 4B4370 |
| 5/8 | 1 3/4 | 4B4371 |
| 5/8 | 2 | 4B4372 |
| 5/8 | 2 1/8 | 4B4373 |
| 5/8 | 2 1/4 | 4B4374 |
| 5/8 | 2 3/8 | 4B4375 |
| 5/8 | 2 1/2 | 4B4376 |
| 5/8 | 2 5/8 | 4B4377 |
| 5/8 | 2 3/4 | 4B4378 |
| 5/8 | 3 | 4B4379 |
| 5/8 | 3 1/8 | 4B4380 |
| 5/8 | 3 1/4 | 4B4381 |
| 5/8 | 3 1/2 | 4B4382 |
| 5/8 | 3 3/4 | 4B4383 |
| 3/4 | 1 1/2 | 4B4384 |
| 3/4 | 2 | 4B4385 |
| 3/4 | 2 1/4 | 4B4386 |
| 3/4 | 2 3/8 | 4B4387 |
| 3/4 | 2 1/2 | 4B4388 |
| 3/4 | 2 3/4 | 4B4389 |
| 3/4 | 3 | 4B4390 |
| 3/4 | 3 1/8 | 4B4391 |
| 3/4 | 3 1/4 | 4B4392 |
| 3/4 | 3 1/2 | 4B4393 |
| 3/4 | 3 3/4 | 4B4394 |
| 3/4 | 4 | 4B4395 |
| 3/4 | 4 1/4 | 4B4396 |
| 7/8 | 4 | 4B4397 |
| 1 | 4 | 4B4398 |