INTERNATIONAL®

MODEL 175 LOADER with DROTT 4-in-1 and STRAIGHT BUCKET Power Shift Drive

4-IN-1
(1¾ cu. yd.)

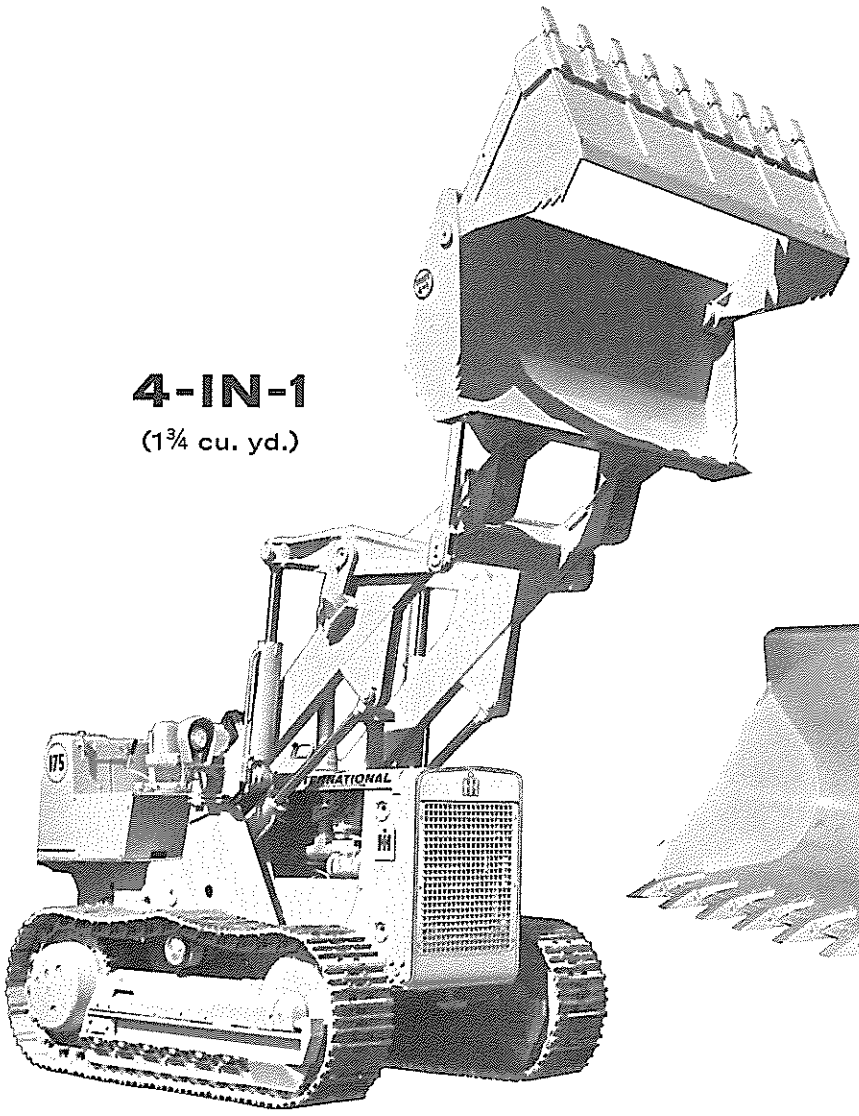

STRAIGHT BUCKET
(1¾ cu. yd.)

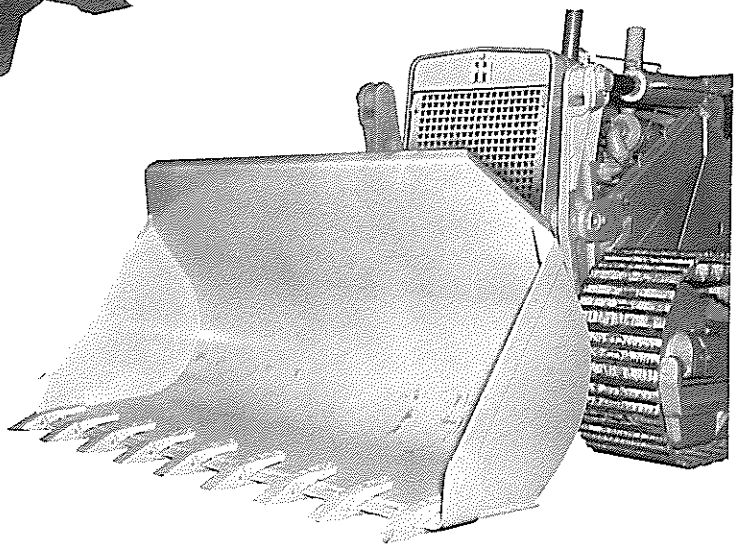

4-IN-1

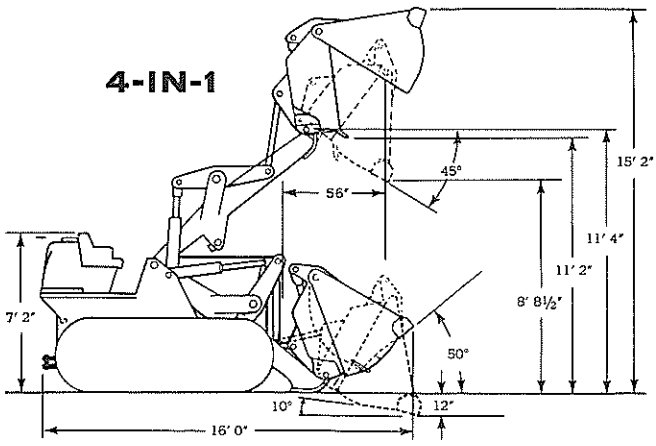

STRAIGHT BUCKET

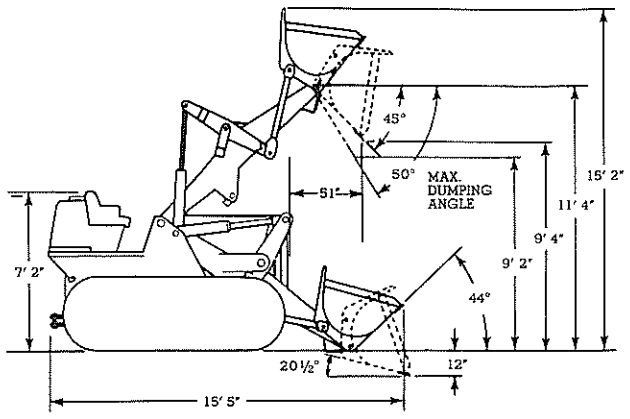

MODEL 175 LOADER 4-IN-1 AND STRAIGHT BUCKET Power Shift Drive

CR-5209-NI

SPECIFICATIONS

INTERNATIONAL MODEL 175 LOADER

Power Shift Drive

Horsepower

Net Rated at Engine Flywheel 115
Rated Governed RPM 2400
Rated Piston Speed, FPM 1800

Engine—Direct-Start Direct Injection, Turbo-Charged 4-Cycle Diesel

Number of Cylinders 6
Bore and Stroke, in. ..... 4⅛ x 4½
Piston Displacement, cu. in. 361
Lubrication ..... Full Pressure
Crankshaft—(Fully Counterbalanced) Elotherm Process Induction Hardened Journals and Fillets
Number of Main Bearings 7
Diameter, Main Bearings, in. 3⅜
Starting System ..... 24-Volt Direct-Electric

Air Cleaner—With Service Indicator and Automatic Dust Unloader ..... Dry-Type

Travel Speeds

Power Shift	Gear Range	Forward MPH	Forward FPM	Reverse MPH	Reverse FPM
1st	Low	0-2.1	0-185	0-2.4	0-211
2nd		0-4.0	0-352	0-4.8	0-422
1st	High	0-2.7	0-238	0-3.2	0-282
2nd		0-5.2	0-458	0-6.2	0-545

Torque Converter Unit—Single Stage; flywheel driven rotating housing with impeller; diameter ins. 12

Power Shift Transmission Unit—Own simplified countershaft type with two power shift speeds forward and two reverse, combined with Hi-Lo range selection for Four Speed ranges forward or reverse. Pressure Lubricated with Filtered Oil.

Steering—Hydraulically Boosted, Single Stage Planetary Steering, Controlled by single lever for each track. Single foot pedal for braking both tracks on downgrades or for parking.

Final Drive Units—Double Reduction, Spur Gear and Planetary, ratio 15.979:1

Bucket

Capacity, Standard SAE Rated, Cu. Yds 1¾
Width, in. 86
Weight, Lbs. (including Piping and Cylinders)
4-in-1 2360
Straight Bucket 1280
Digging or Break-out Force, Lbs.
4-in-1 32,000
Straight Bucket 22,000

Hydraulic System (Closed Type)

Pump, Gear Type, Torque Converter mounted and engine driven 45 GPM @ 1700 PSI and 1910 RPM.
Control Valve (Three-Valve Unit) Single-Lever Lift and Tilt Control.
Positions, Lift Control ..... Raise, Hold, Lower, Float
Tilt Control ..... Tilt Back, Hold, Dump
4-in-1 Clam ..... Close, Hold, Open
Optional Auxiliary Valve for Rear Equipment ..... Raise, Hold, Lower
Hydraulic Oil Capacity of System, Gals.
4-in-1 ..... 24½
Straight Bucket 22
Cylinders, Double-Acting Type (Reverse Acting on Bucket)
Lift Cylinders, Bore & Stroke, in. ..... 5¼ x 33
Tilt Cylinders, Bore & Stroke, in. ..... 4¾ x 20
4-in-1 Cylinders, Bore & Stroke, in. ..... 4 x 10

Tracks (Rigid Track Frames)

Gauge, Center to Center of Tracks, in. 66
Width of Standard Track Shoe, in. 15
(16 in. Max. Permissible Width)
Type Shoe: Overlapping Flat, Low Profile, Triple Grouser
Number of Track Shoes, Each Side 39
Height of Grouser, in. ..... ⅞
Number of Track Rollers, Each Side 6
Length of Tracks on Ground, in. 87.1
Area of Ground Contact, sq. in. 2613
Track Adjustment ..... Full Hydraulic

General Dimensions (Inches)

Length, Over-all, Bucket on Ground and Rolled Back.
4-in-1 192
Straight Bucket 185
Width, Over-All (Width of Bucket) 86
Height, Over-All (Height of Tractor less Exhaust, Air Cleaner Pipes and Lights 84
Ground Clearance 17.8
Drawbar Height (Center Line of Clevis to Bottom of Track Shoe) ..... 15 or 20

Capacities Approximate (U.S. Gallons)

Cooling System 10
Fuel Tank 60
Engine Lubrication, including Filters 5
Transmission Case and Rear Frame 36

Weights (Approximate Pounds):

Shipping with Regular Equipment and 4-in-1 27,000
Straight Bucket 25,920
Operating, Including Fuel and Water 4-in-1 27,500
Straight Bucket 26,420

Specifications subject to change without notice.

INTERNATIONAL HARVESTER COMPANY • 180 N. Michigan Ave. • Chicago 1, Ill. (General Office)

Plants located in the United States; Hamilton, Ontario, Canada; Chatham, Ontario, Canada; Doncaster, England; Geelong, Australia; Dandenong, Australia; Port Melbourne, Australia; Saltillo, Mexico; Neuss, Germany; Norrkoping, Sweden; Montataire, France; Croix, France; St. Dizier, France.

CR-5209-NI 2-8 LITHOGRAPHED IN UNITED STATES OF AMERICA